# DIGITAL PIANO

# YDP-201

## SERVICE MANUAL



**■CONTENTS**


SPECIFICATIONS ..... 3
PANEL LAYOUT ..... 4
CIRCUIT BOARD LAYOUT ..... 5
DISASSEMBLY PROCEDURE ..... 6
LSI PIN DESCRIPTION ..... 12
IC BLOCK DIAGRAM ..... 13
CIRCUIT BOARDS ..... 14
TEST PROGRAM ..... 21
INSPECTIONS ..... 23
MIDI IMPLEMENTATION CHART ..... 24
PARTS LIST
BLOCK DIAGRAM
OVERALL CIRCUIT DIAGRAM



**PK** 001667

YAMAHA
HAMAMATSU, JAPAN
0.032K-61861K Ⓘ Printed in Japan '01.09

# IMPORTANT NOTICE

This manual has been provided for the use of authorized Yamaha Retailers and their service personnel. It has been assumed that basic service procedures inherent to the industry, and more specifically Yamaha Products, are already known and understood by the users, and have therefore not been restated.

**WARNING:** Failure to follow appropriate service and safety procedures when servicing this product may result in personal injury, destruction of expensive components and failure of the product to perform as specified. For these reasons, we advise all Yamaha product owners that all service required should be performed by an authorized Yamaha Retailer or the appointed service representative.

**IMPORTANT:** This presentation or sale of this manual to any individual or firm does not constitute authorization, certification, recognition of any applicable technical capabilities, or establish a principal-agent relationship of any form.

The data provided is believed to be accurate and applicable to the unit(s) indicated on the cover. The research engineering, and service departments of Yamaha are continually striving to improve Yamaha products. Modifications are, therefor, inevitable and changes in specification are subject to change without notice or obligation to retrofit. Should any discrepancy appear to exist, please contact the distributor's Service Division.

**WARNING:** Static discharges can destroy expensive components. Discharge any static electricity your body may have accumulated by grounding yourself to the ground bus in the unit (heavy gauge black wires connect to this bus).

**IMPORTANT:** Turn the unit OFF during disassembly and parts replacement. Recheck all work before you apply power to the unit.

# WARNING: CHEMICAL CONTENT NOTICE!

The solder used in the production of this product contains LEAD. In addition, other electrical / electronic and / or plastic (where applicable) components may also contain traces of chemicals found by the California Health and Welfare Agency (and possibly other entities) to cause cancer and / or birth defects or other reproductive harm.

DO NOT PLACE SOLDER, ELECTRICAL / ELECTRONIC OR PLASTIC COMPONENTS IN YOUR MOUTH FOR ANY REASON WHAT SO EVER!

Avoid prolonged, unprotected contact between solder and your skin! When soldering, do not inhale solder fumes or expose eyes to solder / flux vapor!

If you come in contact with solder or components located inside the enclosure of this product, wash your hands before handling food.

## ■ WARNING

Components having special characteristics are marked and must be replaced with parts having specification equal to those originally installed.

# SPECIFICATIONS

| | |
|---|---|
| • KEYBOARD | 88KEYS (A-1~C7) |
| • POLYPHONY | 32NOTES MAX. |
| • VOICE SELECTORS | 5 voice + Variation for each voice |
| • REVERB | ROOM, HALL 1, HALL 2, STAGE |
| • TOUCH SENSITIVITY | HARD, MEDIUM, SOFT, FIXED |
| • RECORDER | 1, 2, START/STOP, REC |
| • PEDAL CONTROLS | SOFT, SOSTENUTO, DAMPER |
| • OTHER CONTROLS | MASTER VOLUME, DEMO, TRANSPOSE, METRONOME, TEMPO UP/DOWN, FUNCTION, SONG, SONG SELECT UP/DOWN |
| • JACKS/CONNECTORS | AUX OUTPUT TERMINAL (R, L/L+R), PHONES x 2, MIDI IN/OUT, PEDAL |
| • OUTPUT IMPEDANCE | AUX OUTPUT TERMINAL: Output impedance 600 Ω |
| • MAIN AMPLIFIERS | 20W x 2 |
| • SPEAKERS | 16cm x 2 |
| • POWER REQUIREMENTS | U.S.A & Canada 120V AC, 60Hz<br>Europe 230V AC, 50Hz |
| • POWER CONSUMPTION | 35W |
| • DIMENSIONS (W x D x H) | Music stand down 1384mm x 497mm x 829mm<br>Music stand up 1384mm x 497mm x 1001mm |
| • WEIGHT | 46kg (101 lbs., 7oz) |

# ■ PANEL LAYOUT

## • Control Panel

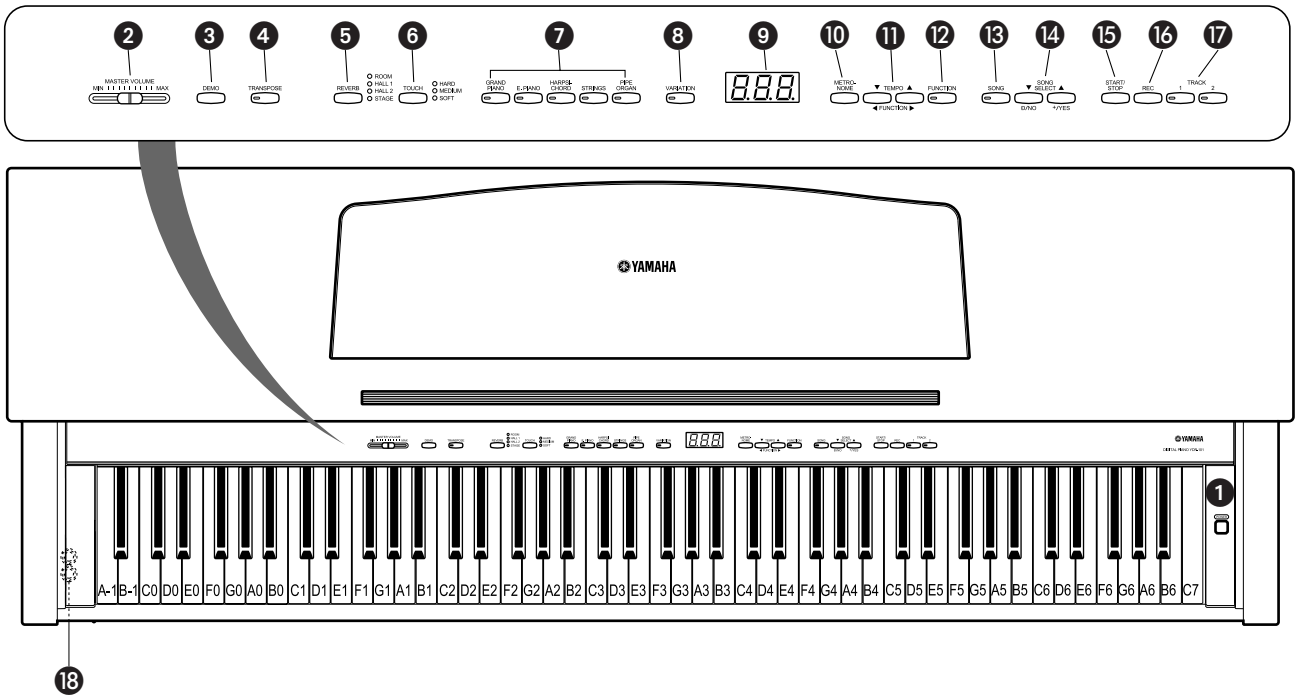


❶ [POWER] Button
❷ [MASTER VOLUME] Knob
❸ [DEMO] Button
❹ [TRANSPOSE] Button
❺ [REVERB] Button
❻ [TOUCH] Button
❼ [VOICE SELECT] Buttons
❽ [VARIATION] Button
❾ DISPLAY
❿ [METRONOME] Button
⓫ [▼] TEMPO [▲] / [◀] FUNCTION [▶] Button
⓬ [FUNCTION] Button
⓭ [SONG] Button
⓮ [▼] SONG SELECT [▲] / [–/NO][+/YES] Button
⓯ [START/STOP] Button
⓰ [REC] Button
⓱ [TRACK] Buttons
[1][2]
⓲ [PHONES]

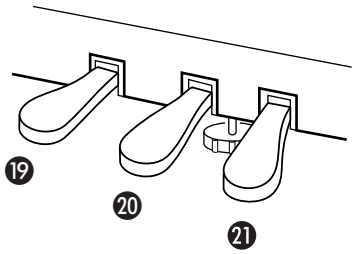

⓳ [SOFT] Pedal
⓴ [SOSTENUTO] Pedal
㉑ [DAMPER] Pedal

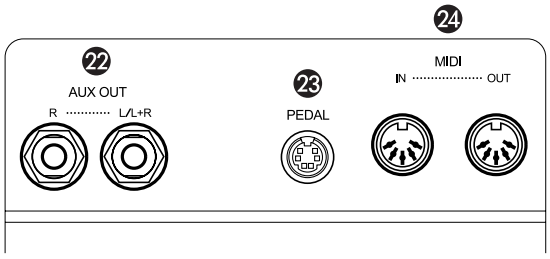


㉒ AUX OUT (R) (L/L+R)
㉓ PEDAL
㉔ MIDI (IN) (OUT)

# CIRCUIT BOARD LAYOUT

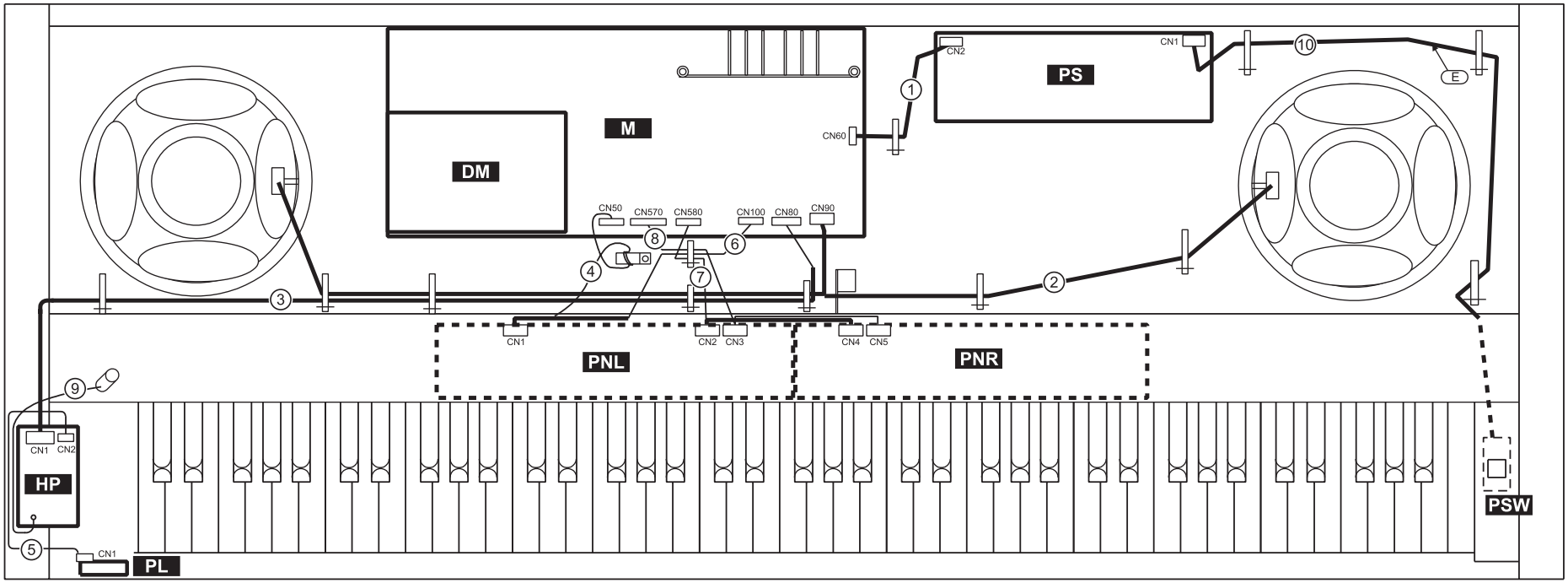


| REF. NO. | DESTINATION | | CONNECTOR ASSEMBLY | PIN/LENGTH | PARTS LIST REF NO. |
|---|---|---|---|---|---|
| ① | M-CN60 | PS-CN2 | POWER | 5P/L=250 | Main-U [580] |
| ② | M-CN90 | SPEAKERS(L-WH/BL,R-RE/BL) | SP | 4P/L=600,R=650 | Main-U [590] |
| ③ | M-CN80 | HP-CN1 | HP | 7P/L=900 | Main-U [600] |
| ④ | M-CN50 | Keyboard | MK-LF | 8P/L=500 | Main-U [610] |
| ⑤ | HP-CN2 | PL-CN1 | KRD-KRD | 2P/L=150 | Main-U [620] |
| ⑥ | M-CN100 | PNL-CN1 | VOL | 8P/L=150 | Control-P [170] |
| ⑦ | M-CN580 | PNL-CN2 | PN1 | 8P/L-330 | Control-P [140] |
| ⑧ | M-CN570 | PNL-CN3 | PN2 | 12P/L=370 | Control-P [150] |
| ⑨ | HP-FG | Key Bed | KRD-KRD | 1P/L=370 | HP circuit board |
| ⑩ | PS-CN1 | Power SW | PSW | 2P/L=1050 | End-B [50] |

2NC-V463790 ⚠1

# DISASSEMBLY PROCEDURE

## 1. Top Board Assembly
**(Time required: about 1 min)**

1-1 Remove the three (3) screws marked [410], hold top board with both hands, slide it to the front, and then lift it up. (Fig.1)

* After removing the top board assembly, remove the following screws. Each circuit board can then be removed. (Fig.2)

| | |
|---|---|
| DM Circuit Board | PCB Support |
| M Circuit Board | [390a] X 2 |
| POWER SUPPLY UNIT | [330b] X 5 |
| SPEAKERS | [360] X 4 |

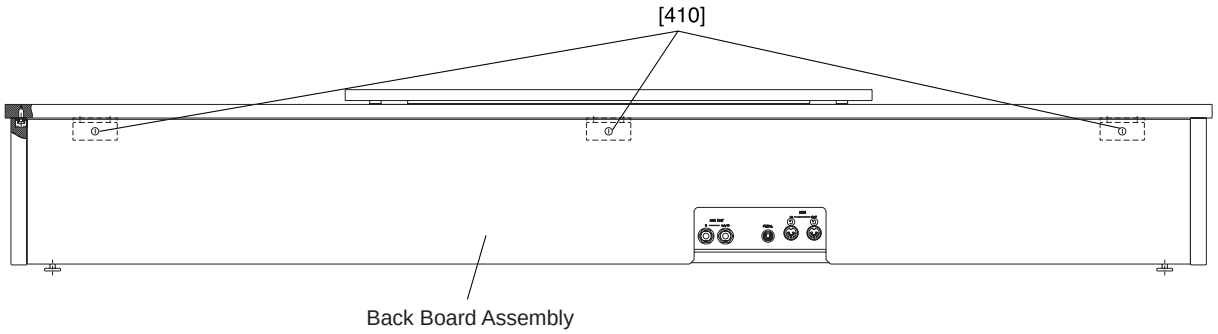


[410]: Truss Head Screw 4.0X20 NFZN2BL (VB934000)

(Fig. 1)

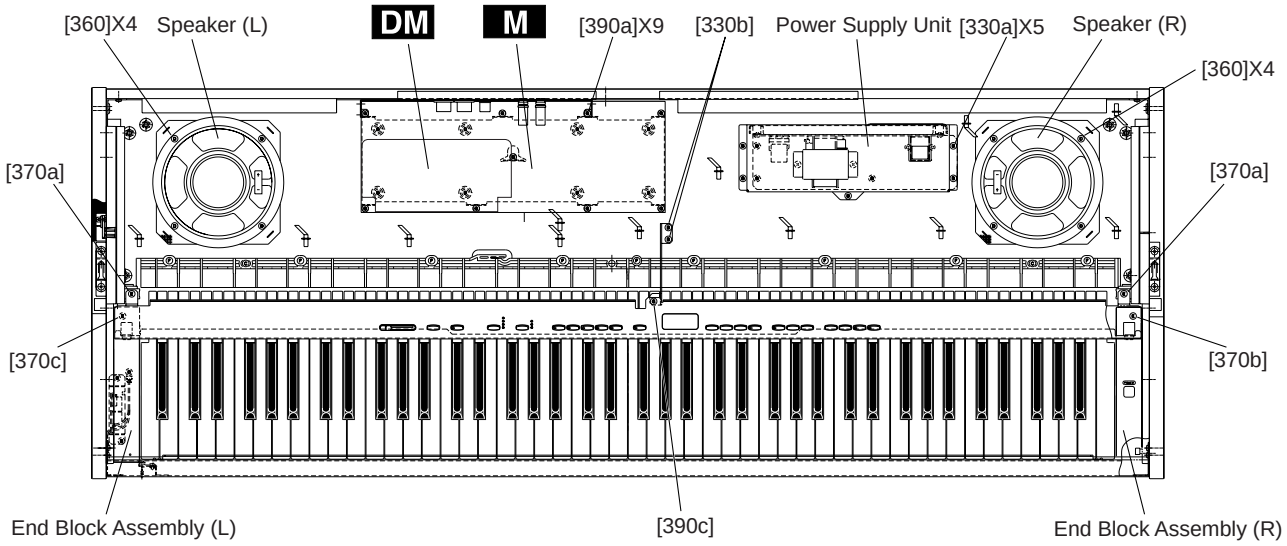


[330]: Bind Head Tapping Screw-1 3.5X12 MFZN2BL (EP030340)
[360]: Truss Head Tapping Screw-1 4X20 MFZN2Y (20338800)
[370]: Bind Head Tapping Screw-B 4.0X10 MFZN2BL (EP600240)
[390]: Bind Head Tapping Screw-B 3.0X8 MFZN2BL (EP600190)

(Fig. 2)

## 2. Key Cover Assembly (Time required: about 2 min)

2-1 Remove the top board assembly. (See Procedure 1)

2-2 Remove the screw marked [390b], remove the rack cover. (See Fig.3)

2-3 After removing the rack cover, slide the linkage bar to the notch location and then lift it up to remove it. (See Figs.3-1, 3-2, 3-3.)

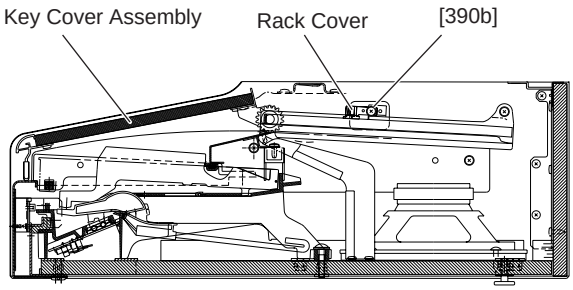


[390]: Bind Head Tapping Screw-B 3.0X8 MFZN2BL (EP600190)

(Fig. 3)

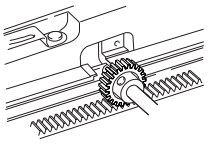

(Fig. 3-1)

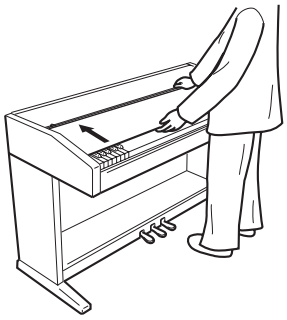

(Fig. 3-2)

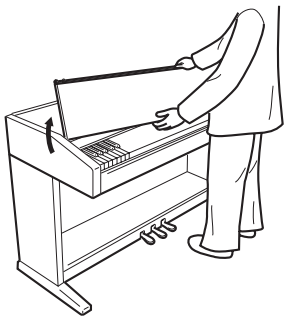

(Fig. 3-3)

## 3. PNL Circuit Board, PNR Circuit Board (Time required: about 5 min)

3-1 Remove the top board assembly. (See Procedure 1)

3-2 Remove the key cover assembly. (See Procedure 2)

3-3 Remove the two (2) screws marked [330b] and the two (2) screws marked [370a]. The control panel assembly can then be removed. (Fig.2)

* To remove these units, remove the screw below. (Fig.4)
PNL Circuit Board [90a] X 7
PNR Circuit Board [90b] X 9

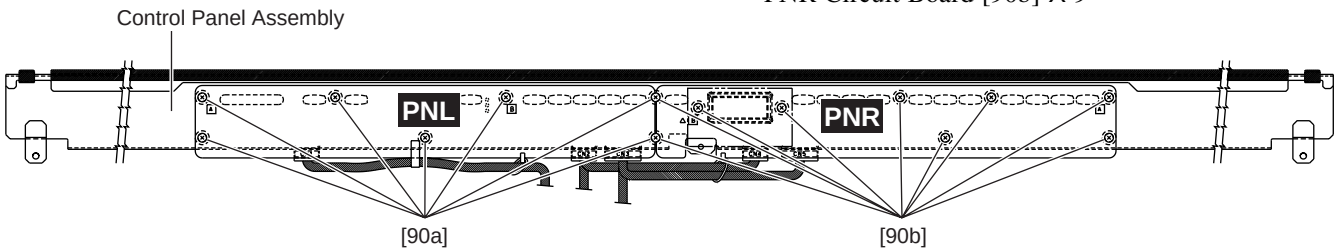


[90]: Bind Head Tapping Screw-B 3.0X6 MFZN2BL (EP600230)

(Fig. 4)

## 4. HP Circuit Board (Time required: about 5 min)

4-1 Remove the top board assembly. (See Procedure 1)

4-2 Remove the key cover assembly. (See Procedure 2)

4-3 Remove the control panel assembly. (See Procedure 3-3)

4-4 Remove the screw marked [370]. The left end block assembly can then be removed. (Fig.5)

4-5 Remove the two (2) screws marked [330]. The headphones jack assembly can then be removed. (Fig.5)

4-6 Remove the two (2) nuts marked [520c]. The phone jack holder can then be removed from the HP circuit board. (Fig.5)

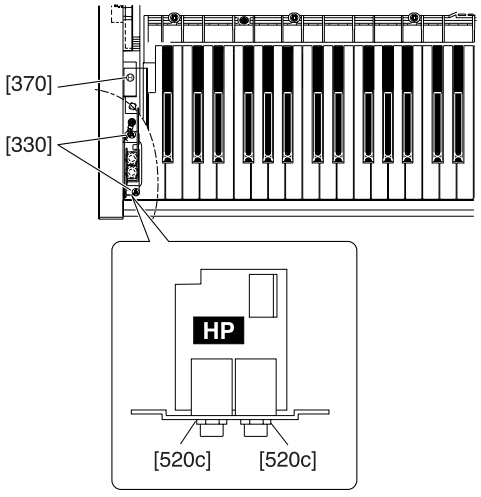


[330]: Bind Head Tapping Screw-1 3.5X12 MFZN2BL (EP030340)
[370]: Bind Head Tapping Screw-B 4.0X10 MFZN2BL (EP600240)
[520c]: Hexagonal Nut 12.0 14X2 MFZN2BL (VB508600)

(Fig. 5)

### 5. PSW Assembly (Time required: about 5 min)

5-1 Remove the top board assembly. (See Procedure 1)
5-2 Remove the key cover assembly. (See Procedure 2)
5-3 Remove the control panel assembly. (See Procedure 3-3)
5-4 Remove the screw marked [370b]. The right end block assembly can then be removed. (Fig.2)
5-5 Remove the two (2) screws marked [30]. The power switch assembly can then be removed. (Fig.6)

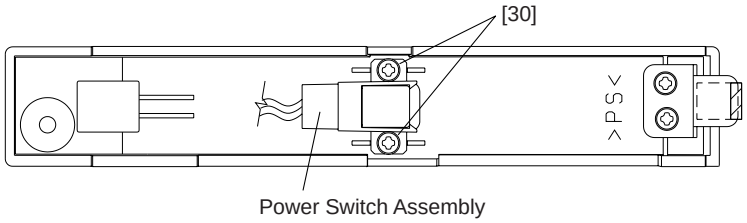


[30]: Bind Head Tapping Screw-B 3.0X8 MFZN2BL (EP600190)

(Fig. 6)

### 6. Keyboard Assembly (Time required: about 5 min)

6-1 Remove the top board assembly. (See Procedure 1)
6-2 Remove the key cover assembly. (See Procedure 2)
6-3 Remove the control panel assembly. (See Procedure 3-3)
6-4 Remove the left end block assembly. (See Procedure 4-4)
6-5 Remove the right end block assembly. (See Procedure 5-4)
6-6 Remove the nine (9) screws marked [380] and the two (2) screws marked [410]. The keyboard assembly can then be removed. (Fig.7)

* Slide the keyboard unit backward, lift the front side at the center of the frame, and raise up the keyboard assembly to remove.
* Removing the keyboard assembly without rising up can cause the keyboard unit twisted and the frame can be damaged.
* When reinstalling, fasten the screw marked [410], then the screw marked [380]. In addition, when installing the keyboard, make sure that the wire bundle, etc., has not been pinched or caught, and then tighten the scew.

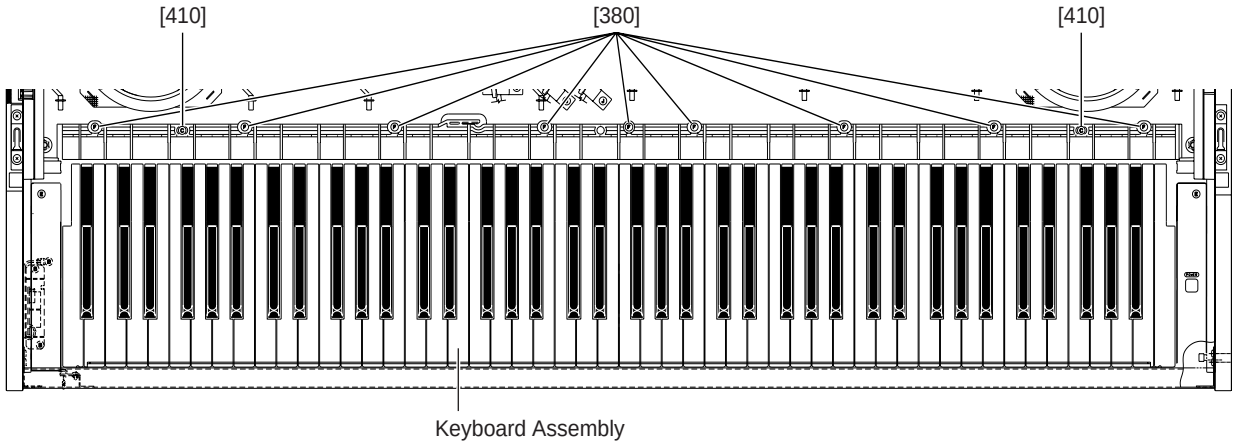


[380]: Pan Head Screw 5.0X25 MFZN2Y PW (VV040700)
[410]: Truss Head Screw 4.0X20 MFZN2BL (VB934000)

(Fig. 7)

### 7. PL Circuit Board (Time required: about 6 min)

7-1 Remove the top board assembly. (See Procedure 1)
7-2 Remove the key cover assembly. (See Procedure 2)
7-3 Remove the control panel assembly. (See Procedure 3-3)
7-4 Remove the keyboard assembly. (See Procedure 6)
7-5 Remove the screw marked [3c]. The PL circuit board can then be removed. (Fig.8)

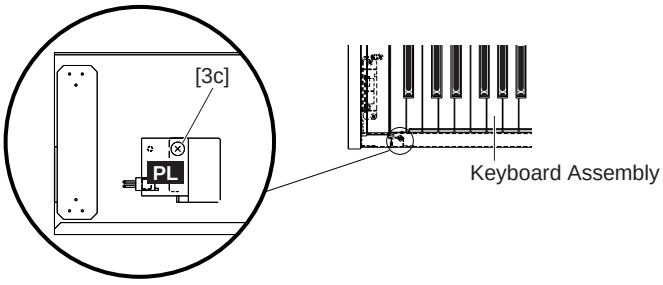


[3c]: Bind Head Tapping Screw-B 3.0X6 MFZN2BL (EP600230)

(Fig. 8)

**8. Front Rail Assembly (Time required: about 6 min)**

8-1 Remove the top board assembly. (See Procedure 1)
8-2 Remove the key cover assembly. (See Procedure 2)
8-3 Remove the control panel assembly. (See Procedure 3-3)
8-4 Remove the keyboard assembly. (See Procedure 6)
8-5 Remove the four (4) screws marked [8] and the seven (7) screws marked [9]. The front rail assembly can then be removed. (Fig.9)

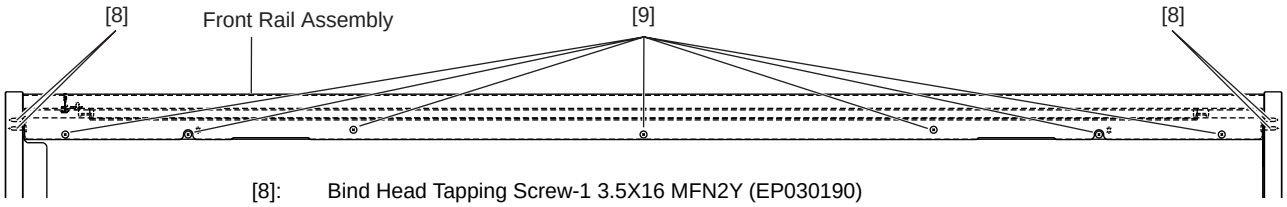


[8]: Bind Head Tapping Screw-1 3.5X16 MFN2Y (EP030190)
[9]: Bind Head Tapping Screw-1 3.5X14 MFZN2BL (EP030250)

(Fig. 9)

**9. Main Unit (Time required: about 3 min)**

9-1 Disconnect the PK cable. (Fig.10)
9-2 Disconnect the AC cord. (Fig.10)
9-3 Remove the four (4) screws marked [S3]. Lift the main unit up slightly and then slide it to backward and then lift it up. (Fig.11, 11-1)
* Be sure to place your hands at least 15cm from either end of the main unit and take care not to pinch your fingers when removing it.

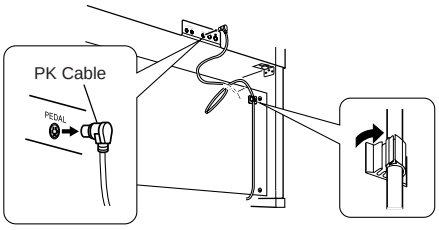


(Fig. 10)

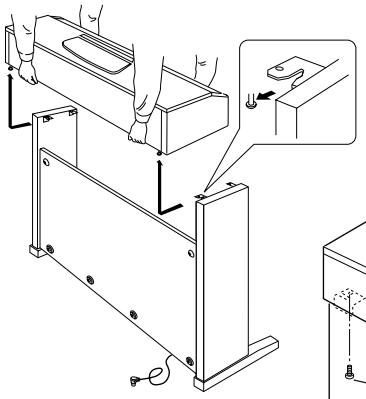

(Fig. 11)

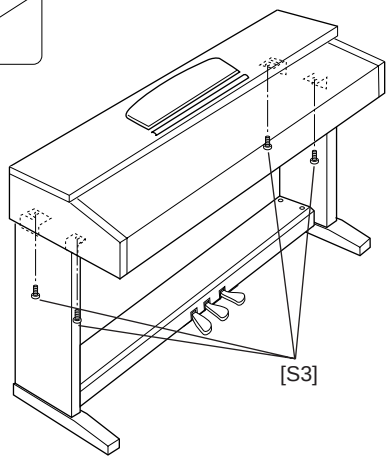


(Fig. 11-1)

**10. Rack Assembly (Time required: about 10 min)**

10-1 Remove the top board assembly. (See Procedure 1)
10-2 Remove the key cover assembly. (See Procedure 2)
10-3 Remove the control panel assembly. (See Procedure 3-3)
10-4 Remove the keyboard assembly. (See Procedure 6)
10-5 Remove the six (6) screw marked [60]. The rack assembly can then be removed. (Fig.12)
* The removing procedures for left and right rack assembly are same.

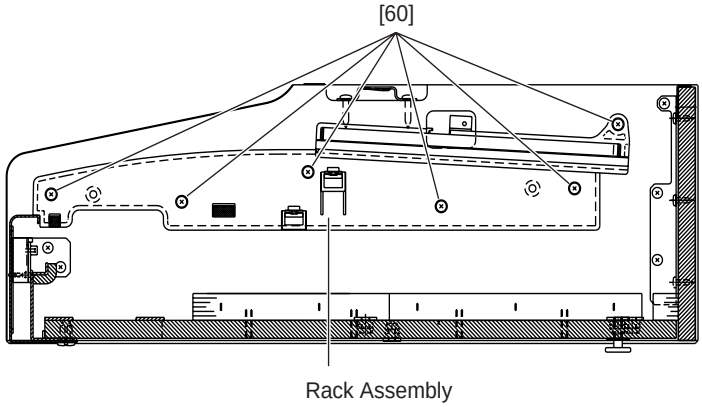


[60]: Bind Head Tapping Screw-1 3.5X16 MFZN2BL (EP030260)

(Fig. 12)

### 11. Pedal Assembly (Time required: about 3 min)

11-1 Disconnect the PK cable. (Fig.10)

11-2 Place the back of the unit on a soft blanket.

11-3 Remove the eight (8) screws marked [30]. The pedal assembly can then be removed. (Fig.13)

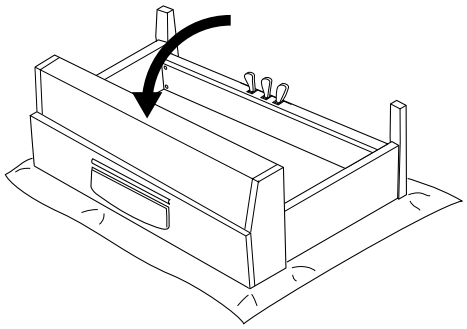

(Fig. 13)

### 12. Stand Base Assembly (Time required: about 5 min)

12-1 Place the back of the unit on a soft blanket. (Fig.13)

12-2 Remove the three (3) screws marked [80]. The stand base assembly can then be removed. (Fig.13-1)

* The removing procedures for left and right stand base assembly are same.

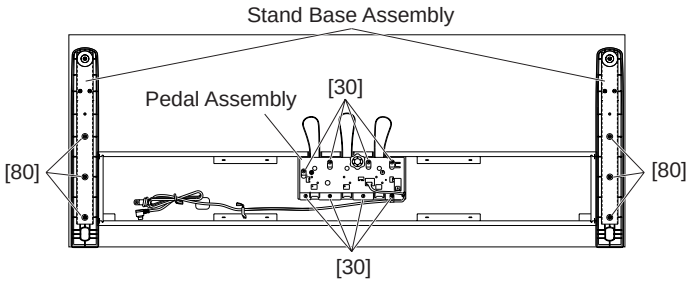


[30]: Bind Head Tapping Screw-1 4.0X14 MFZN2Y (EP040230)

[80]: Pan Head Tapping Screw-1 4.0X65 MFZN2Y (VV444000)

(Fig. 13-1)

### 13. Disassembling the HE Keyboard (Time required: about 20 min)

* After inserting a round stick (Rod: TX000670) between the frame and keys, remove the circuit boards. (Fig.16)

13-1 Remove the keyboard assembly. (See Procedure 6)

13-2 HE288-L circuit board.
Remove the seven (7) screws marked [200a]. The HE288-L circuit board can then be removed. (Fig.14)

13-3 AEXL88-H circuit board.
Remove the ten (10) screws marked [200b]. The AEXL88-H circuit board can then be removed. (Fig.14)

* Keys can be removed without removing the circuit boards.

* A rubber contact can be removed after removing the circuit boards.

13-4 White Key
Insert a thin plate between the white keys, near the triangle mark around the fulcrum of the key, and press down the stopper marked [A] to remove the key. (Fig.15 and 16)

* Take care not to damage the key spring when removing a key.

* A black key can be removed after both adjacent white keys have been removed.

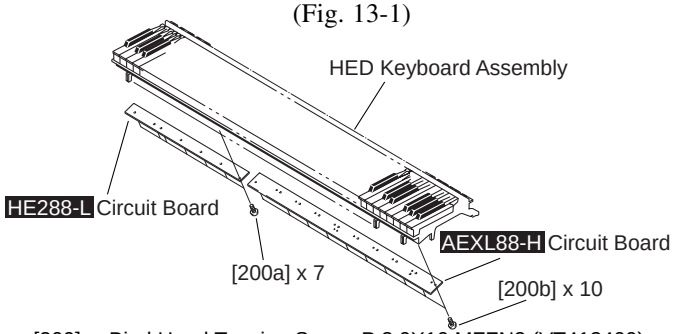


[200]: Bind Head Tapping Screw-P 3.0X10 MFZN2 (VT413400)

(Fig. 14)

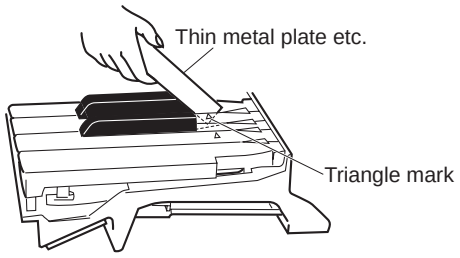


(Fig. 15)

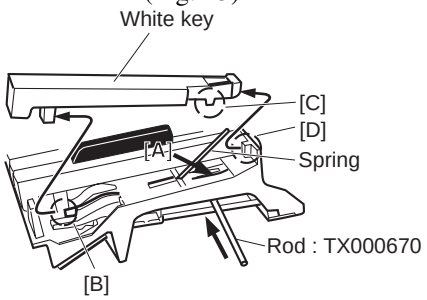


(Fig. 16)

13-5 Hammer, White Key
After a key has been removed, push the key spring down once to take it out of the hook. (Fig.17)
Place the GH keyboard assembly upside down and peel away then stopper L88. The hammer of the white key can then be removed. (Fig.18)
* The hammer of a black key can be removed in the same manner.

## 14. Assembling the HED Keyboard

14-1 Hammer of White (Black) Key
Place the keyboard assembly upside down, insert a hammer assembly into the frame, and put the stopper L88 on. (Fig.19)
* There are four kinds of hammers that differ in weight.

14-2 Key Spring
Place the keyboard assembly right side up, and fix a key spring to the frame by setting it at the slit and pushing it down once. (Fig.20)
* Be careful of the direction of the spring.

14-3 White (Black) Key
After a key has been fit to part [F] and the key guide, make sure that the spring is fixed to the key. Then press part [E] of the key down. (Fig.21)

14-4 HE288-L circuit board.
Tighten the seven [7] screws marked [200a] to fix the HE288-L circuit board. (Fig.14)

14-5 AEXL88-H circuit board.
Tighten the ten [10] screws marked [200b] to fix the AEXL88-H circuit board. Set the slits of the rubber contact at the marks on the frame. (Fig.14)

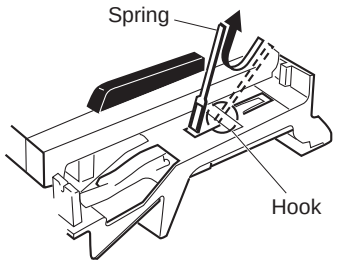


(Fig. 17)

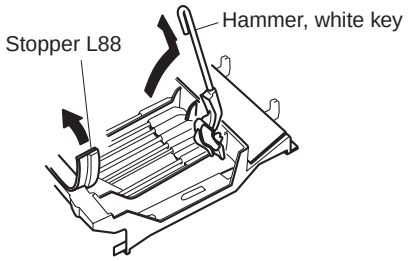


(Fig. 18)

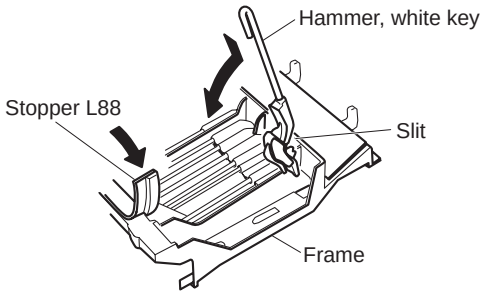


(Fig. 19)

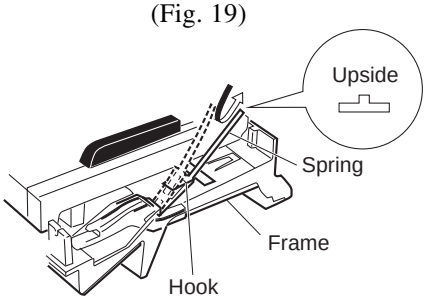


(Fig. 20)

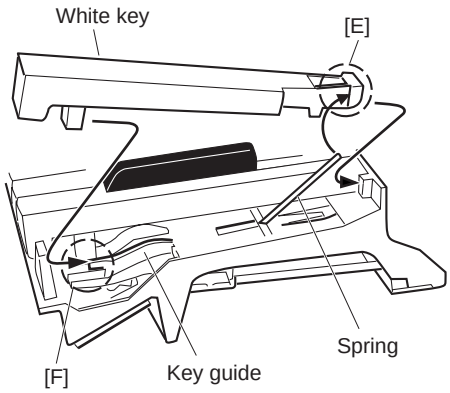


(Fig. 21)

# ■ LSI PIN DESCRIPTION

• **HG73C205AFD** (XU947C00) **SWX00B** TONE GENERATOR DM: IC001

| PIN NO. | NAME | I/O | FUNCTION | PIN NO. | NAME | I/O | FUNCTION |
|---|---|---|---|---|---|---|---|
| 1 | ICN | I | Initial clear | 85 | CMA3 | O | |
| 2 | RFCLKI | I | PLL Clock | 86 | CMA8 | O | Program address bus |
| 3 | TM2 | I | PLL Control | 87 | CMA2 | O | |
| 4 | AVDD_PLL | | Power supply | 88 | CRD | O | read signal |
| 5 | AVSS_PLL | | Ground | 89 | CMA1 | O | Program address bus |
| 6 | MODE0 | I | SWX dual mode | 90 | CUB | O | high byte effective signal |
| 7 | VCC7 | | Power supply | 91 | VCC91 | | Power supply |
| 8 | GND8 | | Ground | 92 | GHND92 | | Ground |
| 9 | XIN | I | crystal oscillator | 93 | CS1 | O | CS signal |
| 10 | XOUT | O | crystal oscillator | 94 | CMA0 | O | Program address bus |
| 11 | MODE1 | I | SWX separate mode | 95 | CLB | O | low byte effective signal |
| 12 | TEST0 | I | TEST pin | 96 | CMA12 | O | |
| 13 | TESTON | I | TEST pin | 97 | CMA11 | O | |
| 14 | AN0-P40 | I | | 98 | CMA10 | O | Program address bus |
| 15 | AN1-P41 | I | | 99 | CMA9 | O | |
| 16 | AN2-P42 | I | A/D converter | 100 | GND100 | | Ground |
| 17 | AN3-P43 | I | | 101 | CWE | O | write signal |
| 18 | AVDD_AN | | Power supply | 102 | CMA16 | O | |
| 19 | AVSS_AN | | Ground | 103 | CMA15 | O | |
| 20 | TXD0 | O | for MIDI or TO-HOST | 104 | CMA14 | O | Program address bus |
| 21 | TXD1 | O | for MIDI | 105 | CMA13 | O | |
| 22 | EXCLK | I | Crystal oscillator | 106 | CMD8 | I/O | |
| 23 | SMD11 | I/O | | 107 | CMD7 | I/O | |
| 24 | SMD4 | I/O | | 108 | CMD9 | I/O | |
| 25 | SMD3 | I/O | | 109 | CMD6 | I/O | |
| 26 | SMD12 | I/O | | 110 | CMD10 | I/O | |
| 27 | SMD10 | I/O | | 111 | CMD5 | I/O | |
| 28 | SMD5 | I/O | | 112 | CMD11 | I/O | Program memory Data bus |
| 29 | SMD2 | I/O | Wave memory data bus | 113 | CMD4 | I/O | |
| 30 | SMD13 | I/O | | 114 | CMD12 | I/O | |
| 31 | SMD9 | I/O | | 115 | CMD3 | I/O | |
| 32 | SMD6 | I/O | | 116 | CMD13 | I/O | |
| 33 | SMD1 | I/O | | 117 | CMD2 | I/O | |
| 34 | SMD14 | I/O | | 118 | CMD14 | I/O | |
| 35 | VCC35 | | Power supply | 119 | VCC119 | | Power supply |
| 36 | GND36 | | Ground | 120 | GND115 | | Ground |
| 37 | SMD8 | I/O | | 121 | CMD1 | I/O | |
| 38 | SMD7 | I/O | | 122 | CMD15 | I/O | Program memory Data bus |
| 39 | SMD0 | I/O | Wave memory data bus | 123 | CMD0 | I/O | |
| 40 | SMD15 | I/O | | 124 | CMA21 | O | Program address bus |
| 41 | SOE | O | read signal | 125 | PDT15 | I/O | |
| 42 | SWE | O | write signal | 126 | PDT14 | I/O | |
| 43 | SRAS | O | RAS signal | 127 | PDT13 | I/O | |
| 44 | SCAS | O | CAS signal | 128 | PDT12 | I/O | |
| 45 | REFRESH | O | REFRESH signal | 129 | PDT11 | I/O | SWX access data bus |
| 46 | CS0 | O | CS signal | 130 | PDT10 | I/O | |
| 47 | SMA0 | O | | 131 | PDT9 | I/O | |
| 48 | SMA16 | O | Memory address bus | 132 | PDT8 | I/O | |
| 49 | VCC49 | | Power supply | 133 | VCC133 | | Power supply |
| 50 | GND50 | | Ground | 134 | GND134 | | Ground |
| 51 | SMA1 | O | | 135 | PDT7 | I/O | |
| 52 | SMA15 | O | | 136 | PDT6 | I/O | |
| 53 | SMA2 | O | | 137 | PDT5 | I/O | |
| 54 | SMA14 | O | | 138 | PDT4 | I/O | |
| 55 | SMA3 | O | Memory address bus | 139 | PDT3 | I/O | SWX access data bus |
| 56 | SMA13 | O | | 140 | PDT2 | I/O | |
| 57 | SMA4 | O | | 141 | PDT1 | I/O | |
| 58 | SMA12 | O | | 142 | PDT0 | I/O | |
| 59 | SMA5 | O | | 143 | VCA143 | | Power supply |
| 60 | GND60 | | Ground | 144 | GND144 | | Ground |
| 61 | VCC61 | | Power supply | 145 | PAD2 | I | |
| 62 | SMA11 | O | | 146 | PAD1 | I | SWX access address bus |
| 63 | SMA6 | O | | 147 | PAD0 | I | |
| 64 | SMA10 | O | | 148 | VCC148 | | Power supply |
| 65 | SMA7 | O | | 149 | GND149 | | Ground |
| 66 | SMA9 | O | | 150 | PCS | I | Chip select |
| 67 | SMA17 | O | | 151 | PWR | I | write enable |
| 68 | SMA8 | O | Memory address bus | 152 | PRD | I | read enable |
| 69 | SMA18 | O | | 153 | RXD0 | I | for Midi or TO-HOST |
| 70 | SMA19 | O | | 154 | RXD1 | I | for Midi or Key scan |
| 71 | SMA20 | O | | 155 | SCLKI | I | EXT Clock |
| 72 | SMA21 | O | | 156 | ADIN | I | A/D converter |
| 73 | SMA22 | O | | 157 | ADLR | O | A/D converter LR clock |
| 74 | SMA23 | O | | 158 | DO0 | O | DAC |
| 75 | CMA20 | O | | 159 | DO1 | O | |
| 76 | CMA19 | O | Program address bus | 160 | SYSCLK | O | 1/2 clock |
| 77 | VCC77 | | Power supply | 161 | VCC161 | | Power supply |
| 78 | GND78 | O | Ground | 162 | GND162 | | Ground |
| 79 | CMA18 | O | | 163 | WCLK | O | for DAC LR clock |
| 80 | CMA17 | O | | 164 | QCLK | O | 1/12 clock |
| 81 | CMA5 | O | | 165 | BCLK | O | IIS-DAC clock |
| 82 | CMA6 | O | Program address bus | 166 | SYI | I | Synch signal |
| 83 | CMA4 | O | | 167 | IRQ0 | I | Interrupt request |
| 84 | CMA7 | O | | 168 | NMI | I | |

● **YMZ702-D** (XR632A00) **KSN2** (Key Scanner) KSN2: IC1

| PIN NO. | NAME | I/O | FUNCTION | PIN NO. | NAME | I/O | FUNCTION |
|---|---|---|---|---|---|---|---|
| 1 | BK5 | O | Key block (open drain) | 21 | GND | | Ground |
| 2 | BK4 | O | | 22 | VDD | | Power supply |
| 3 | BK3 | O | | 23 | SO | O | Serial data |
| 4 | BK2 | O | | 24 | ACK | I | Acknowledge/mode select |
| 5 | BK1 | O | | 25 | XCK | I | Clock for serial data |
| 6 | BK0 | O | | 26 | /IC | I | Initial clear |
| 7 | MK15 | I | 1st make contact | 27 | TST1 | I | Test mode |
| 8 | MK14 | I | | 28 | TST2 | I | (L,L: normal mode, others: test) |
| 9 | MK13 | I | | 29 | XCKINH | I | In hibit of serial clock |
| 10 | MK12 | I | | 30 | BK14 | O | Key block (open drain) |
| 11 | MK11 | I | | 31 | BK13 | O | |
| 12 | MK10 | I | | 32 | BK12 | O | |
| 13 | MK05 | I | 2nd make contact | 33 | BK11 | O | |
| 14 | MK04 | I | | 34 | BK10 | O | |
| 15 | MK03 | I | | 35 | BK9 | O | |
| 16 | MK02 | I | | 36 | BK8 | O | |
| 17 | MK01 | I | | 37 | BK7 | O | |
| 18 | MK00 | I | | 38 | BK6 | O | |
| 19 | XOUT | O | Crystal osc. output (4 MHz) | 39 | GND | | Ground |
| 20 | XIN | I | Crystal osc. input (4 MHz) | 40 | VDD | | Power supply |

● μ**PD63200GS-E1** (XP867A00) **DAC** (Digital to Analog Converter) DM: IC004

| PIN NO. | NAME | I/O | FUNCTION | PIN NO. | NAME | I/O | FUNCTION |
|---|---|---|---|---|---|---|---|
| 1 | 4/8F | I | 4/8 Fs selection | 9 | R. REF | | Channel R voltage reference |
| 2 | D. GND | | Digital ground | 10 | L. REF | | Channel L voltage reference |
| 3 | 16/18 BIT | I | 16 bit/18 bit selection | 11 | L. OUT | O | Channel L output |
| 4 | D. VDD | | Digital power supply | 12 | A. GND | | Analog ground |
| 5 | A. GND | | Analog ground | 13 | LRCX/WD | I | Word clock |
| 6 | R. OUT | O | Channel R output | 14 | LR/RSI | I | Channel R series input |
| 7 | A. VDD | | Analog power supply | 15 | SI/LSI | I | Channel L series input |
| 8 | A. VDD | | | 16 | CLK | I | Clock |

# ■ IC BLOCK DIAGRAM

● **TC74HC00AF**(XD655A00)
Quad 2 Input NAND
DM circuit board:IC008

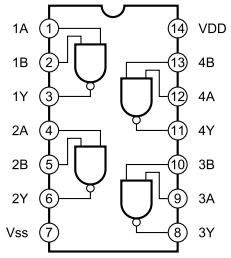


● **TC74HC132AP**(IR013200)
● **SN74HC132N**(IR013250)
Quad 2 Input NAND
M circuit board: IC10

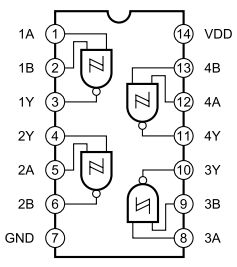


● μ **PC4570HA** (XB247A00)
Dual Operational Amplifier
M circuit board : IC150

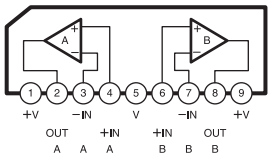

# CIRCUIT BOARDS

## • M CIRCUIT BOARD

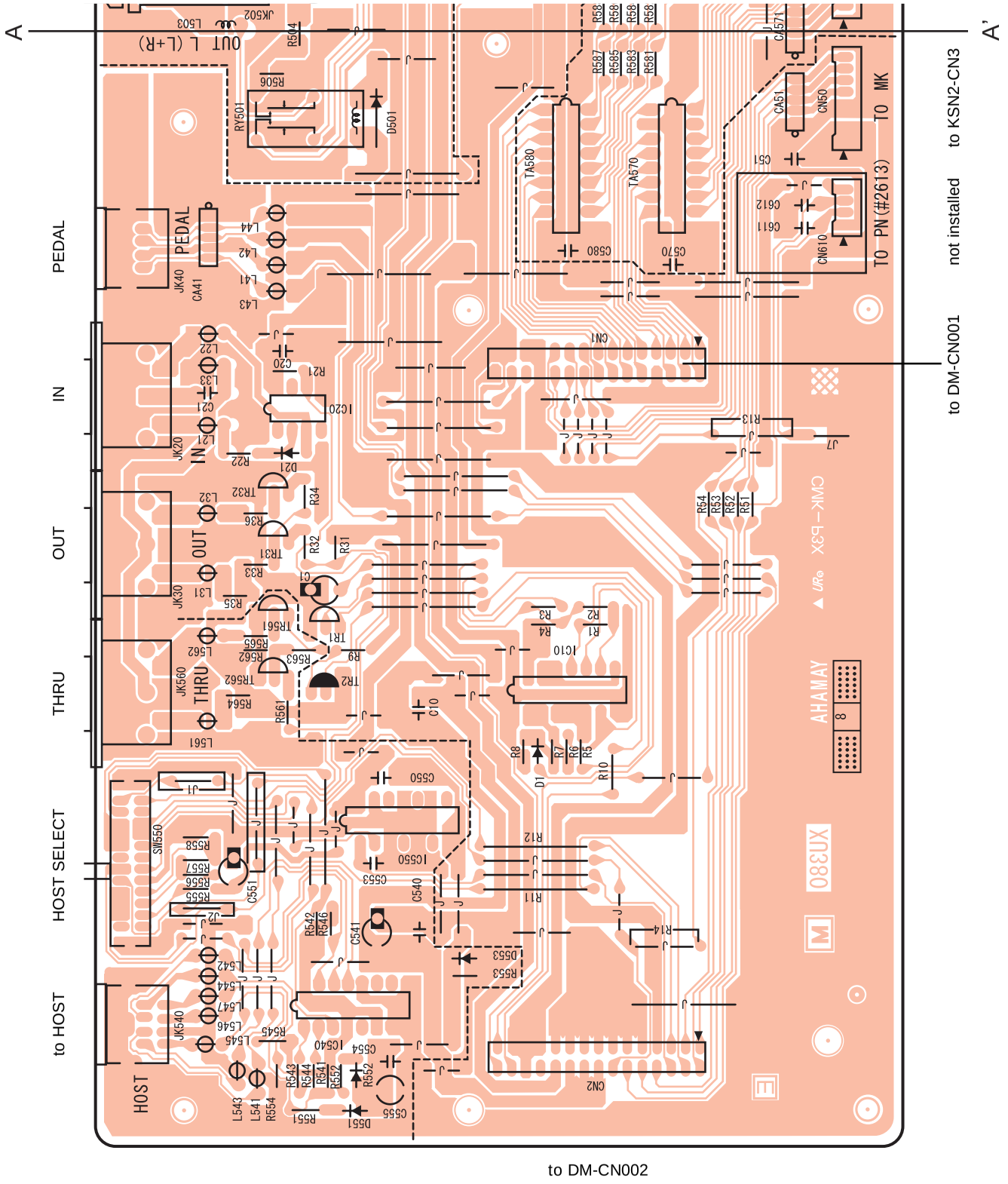


M: 2NA-VZ89960 5

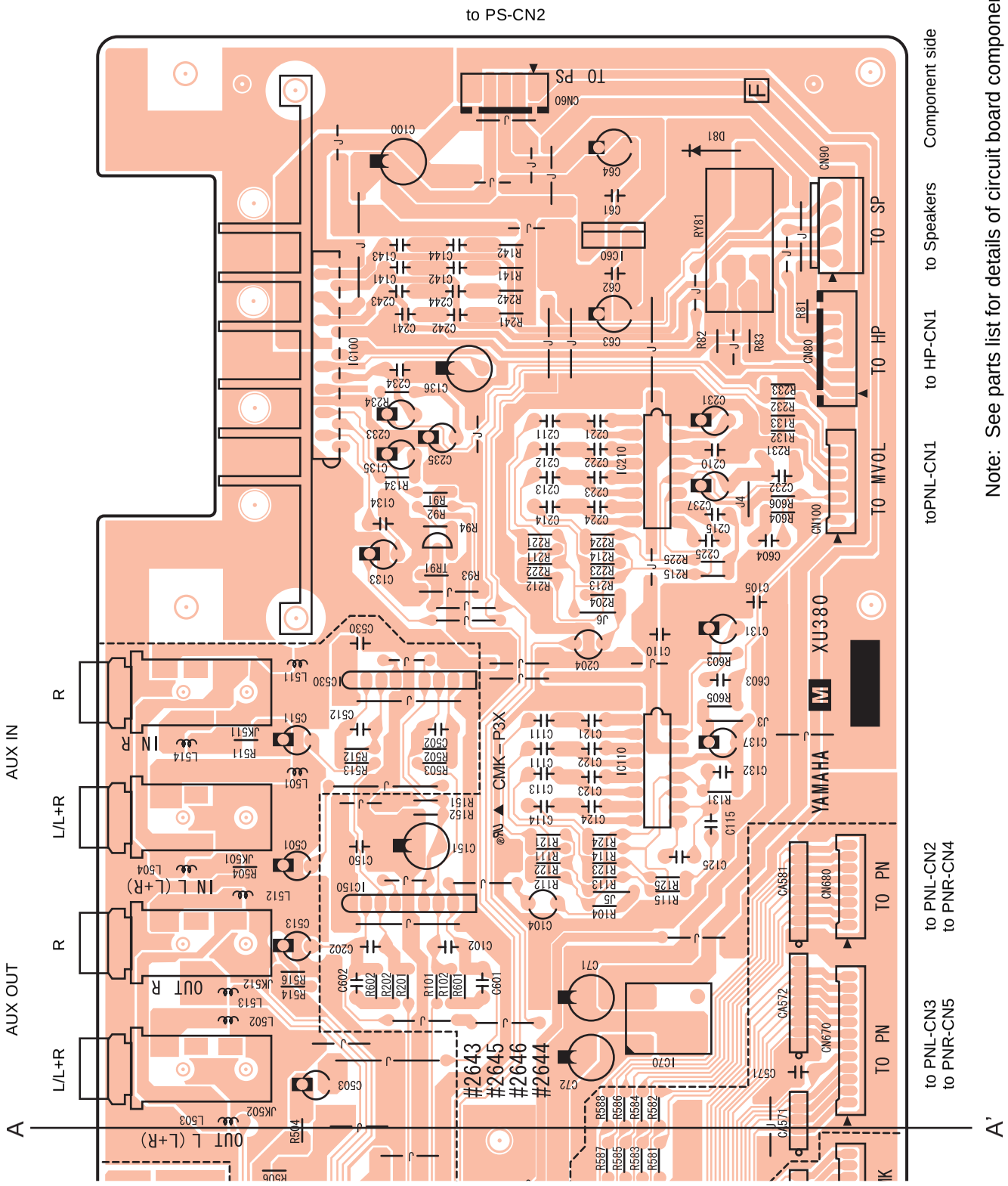


Note: See parts list for details of circuit board component parts.

M: 2NA-VZ89960 ⚠5

## • DM CIRCUIT BOARD

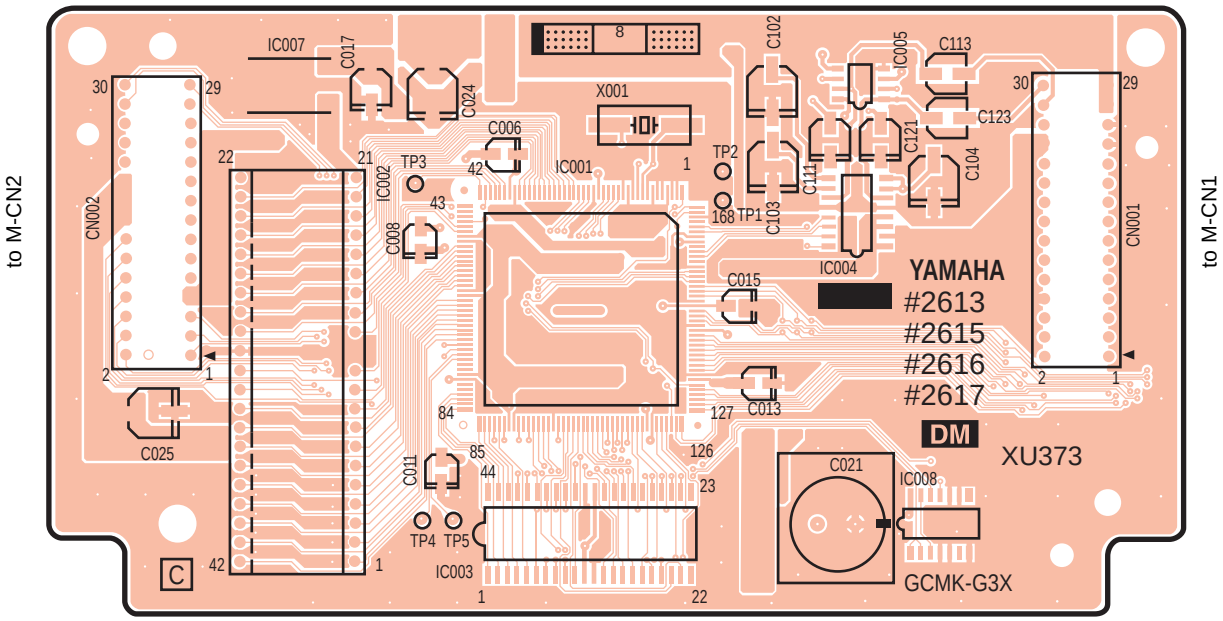


Component side

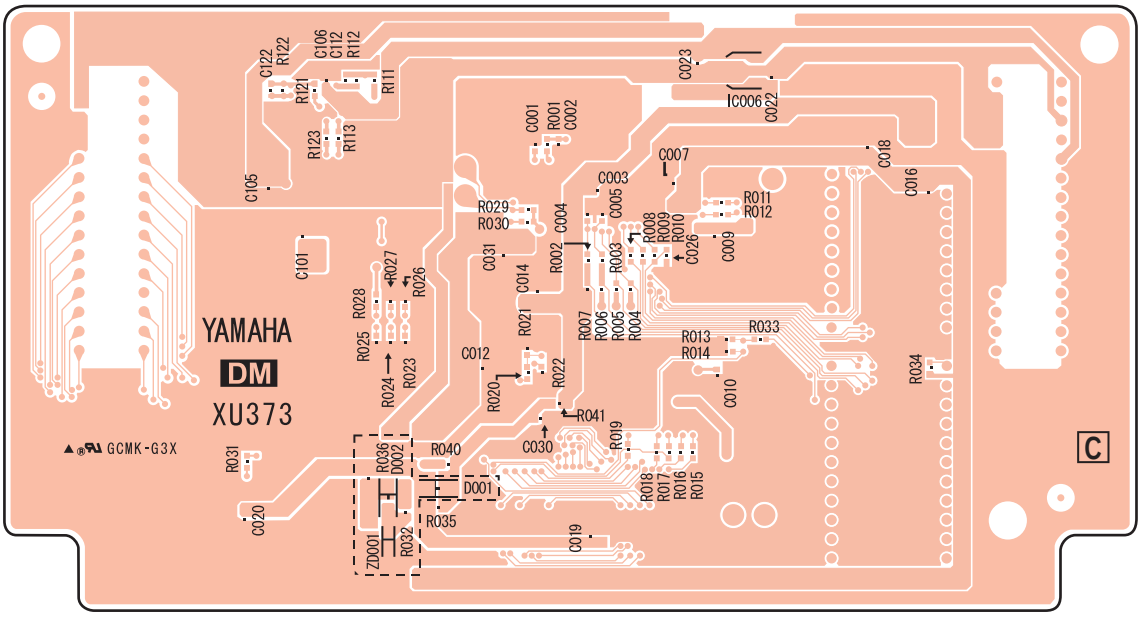


Pattern side

## • PL CIRCUIT BOARD

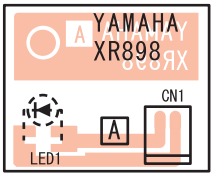


to HP-CN2
Component side

Note: See parts list for details of circuit board component parts.

DM: 2NA-VZ90000 ⓪
PL: 2NA-VN63740 ①

## • PS CIRCUIT BOARD

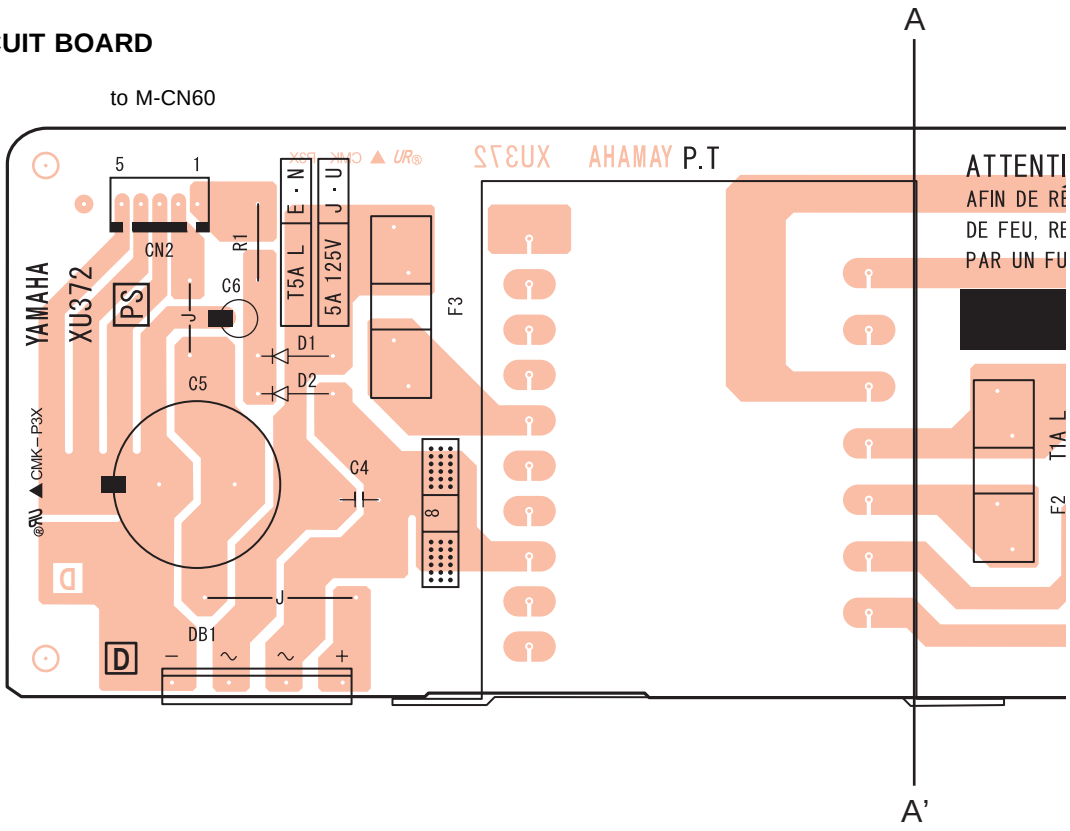


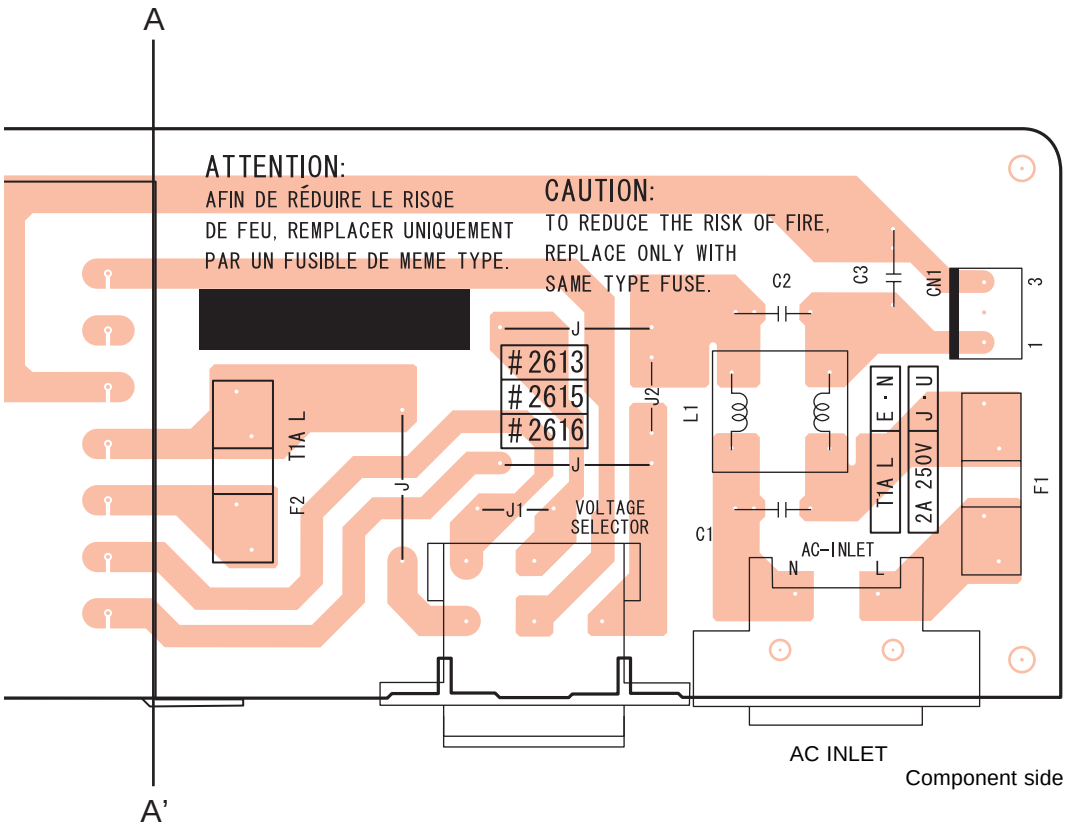


PS: 2NA-V001130 ⚠0

Note: See parts list for details of circuit board component parts.

## • HP CIRCUIT BOARD

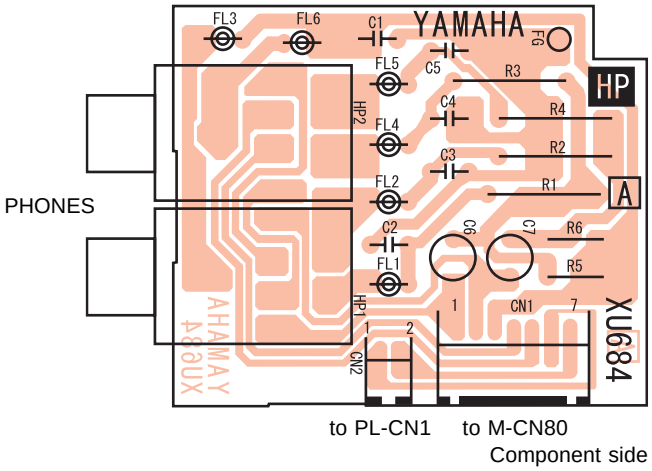


## • KSN2 CIRCUIT BOARD

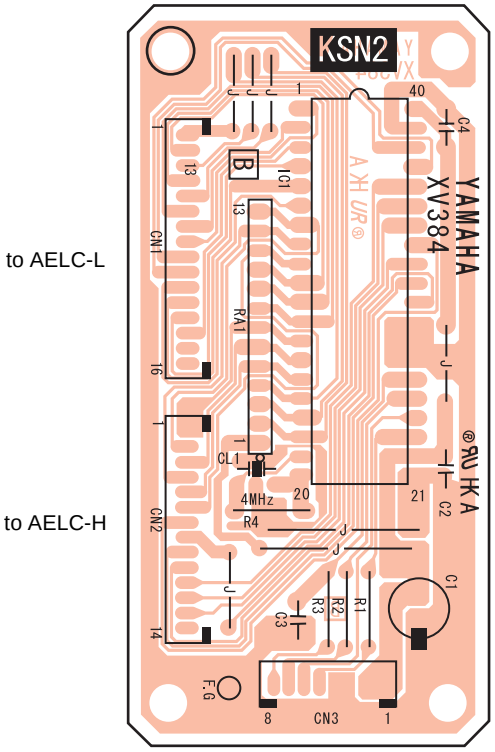


## • PEDAL Circuit Board

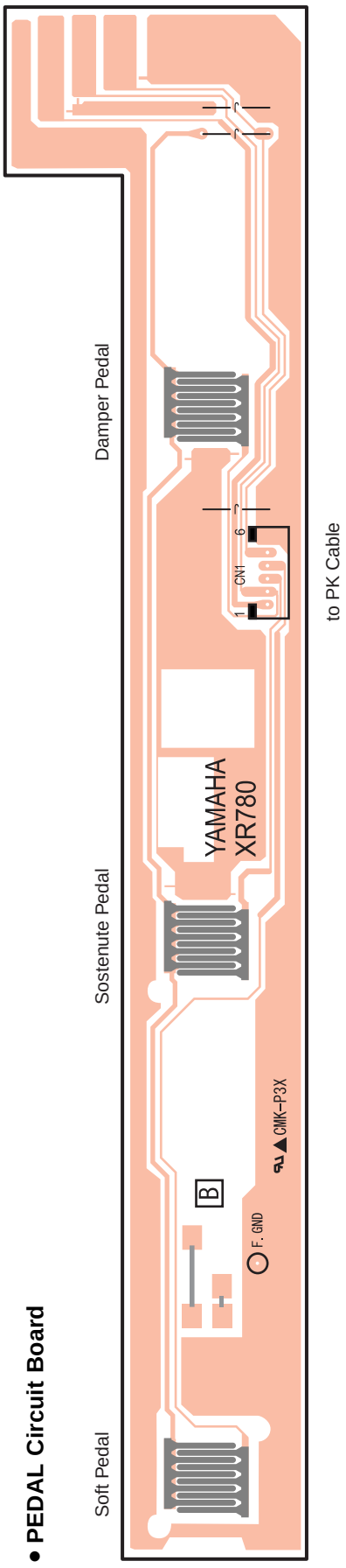


HP: 2NA-V202110 ⚠1
KSN2: 2NA-V306660
PEDAL: 2NA-V233730 ⚠1

Note: See parts list for details of circuit board component parts.

## • PNR CIRCUIT BOARD

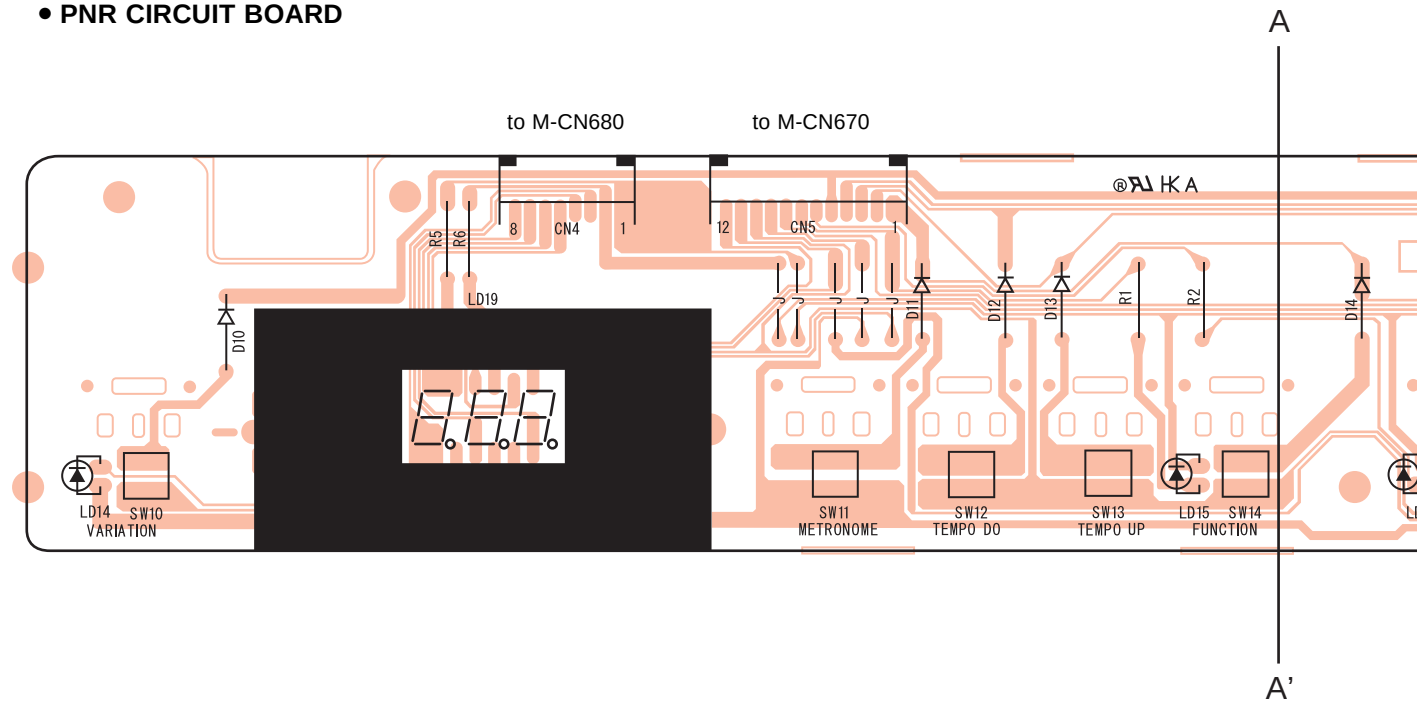


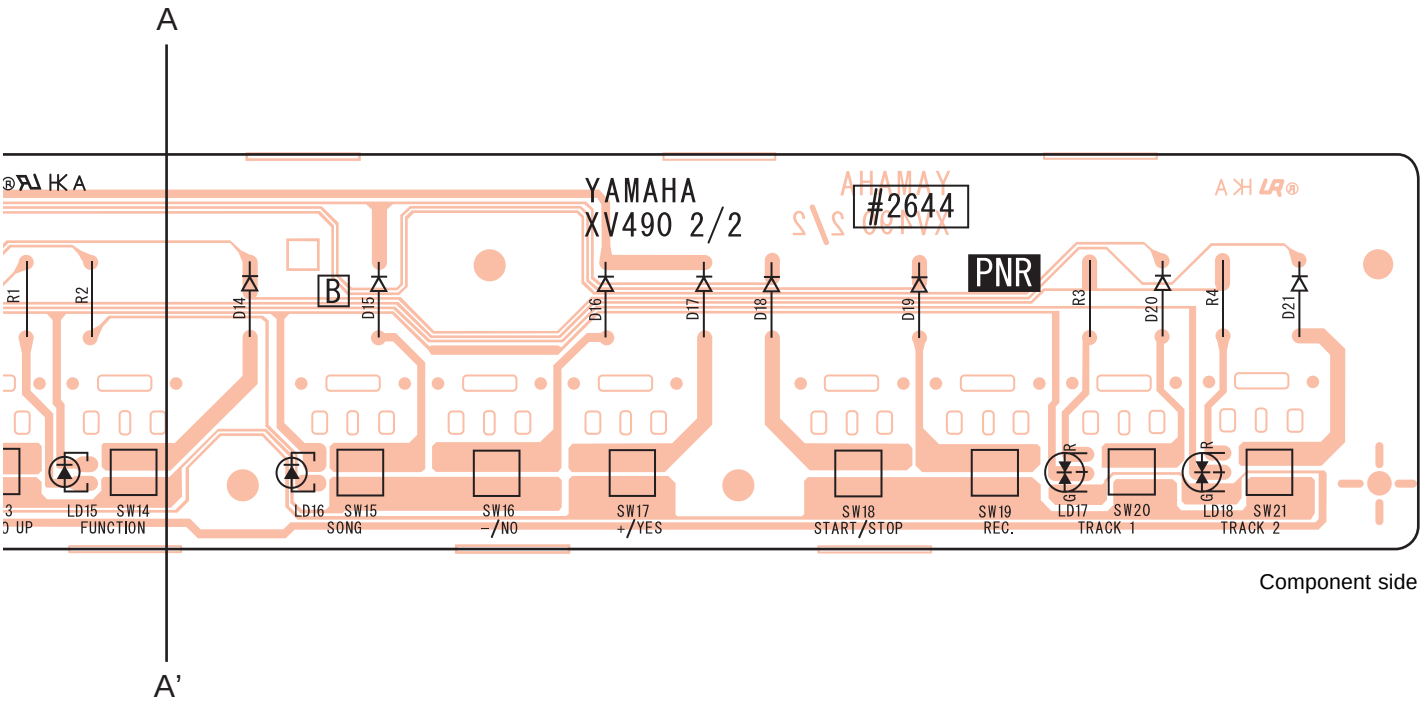


Component side

PNR: 2NA-V306650 ⚠0

Note: See parts list for details of circuit board component parts.

## • PNL CIRCUIT BOARD

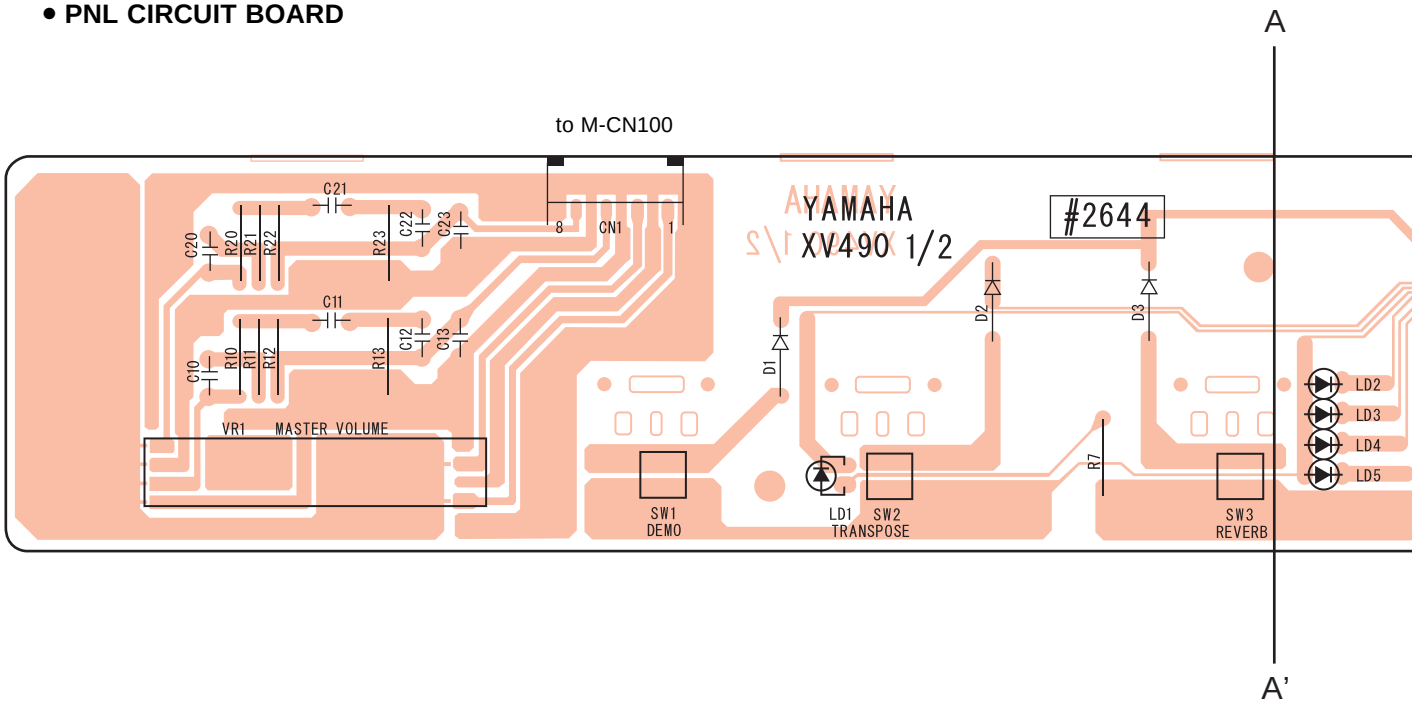


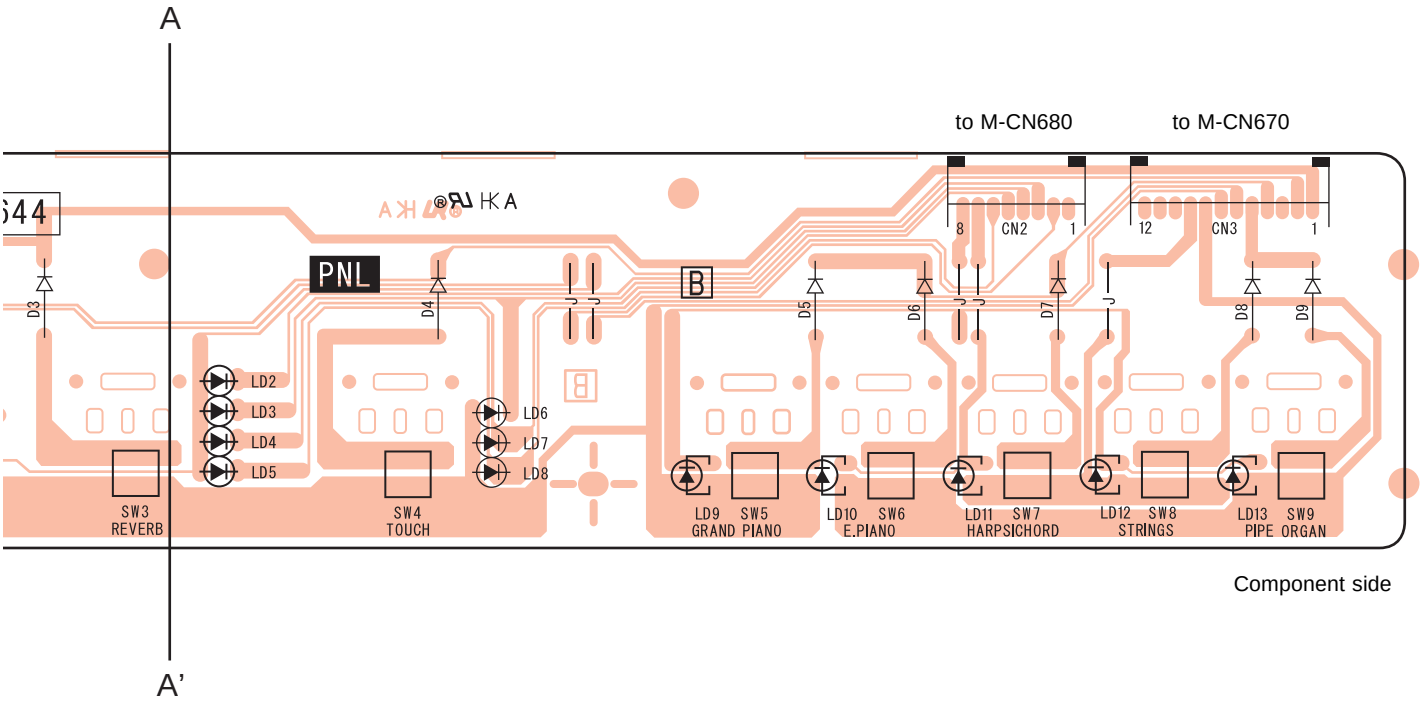


Component side

Installation of LED

LD2~LD8

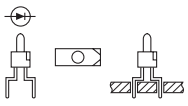

LD17, LD18

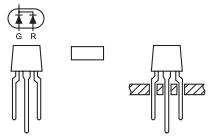

Installation of SW, VR



Installation of VR1

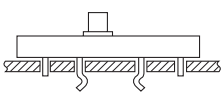

PNL: 2NA-V306650 ⚠0

Note: See parts list for details of circuit board component parts.

# TEST PROGRAM

## 1. Preparation

To check unit using the test program, the following measuring instruments and jigs will be required:

Level meter (IHF-C curve)

Frequency counter

Notes: Impedance must be 1Mohm or above.

Use stereo plugs, and connect 33-ohm load at PHONES terminal.

Unit setting:

MASTER VOLUME: Maximum

Tone: PIANO 1

Pedal: OFF

Reverb: OFF

AUX IN, AUX OUT: Not connected

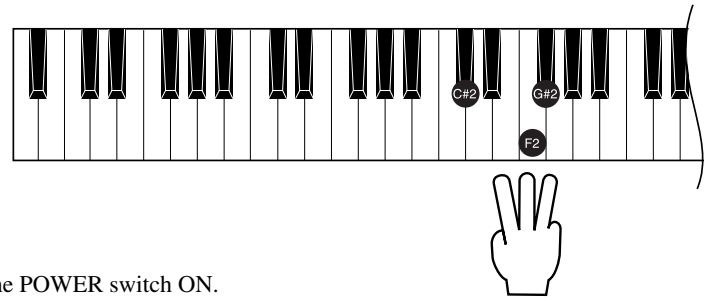


## 2. How to enter the Test Program

While depressing the [C2#], [F2] and [G2#] keys, turn the POWER switch ON.

## 3. Proceeding through the Test Program

When the test program is activated, the sign "rSr" is indicated LED display.

Press [▼] or [▲] buttons of [Tempo] to select the menu of the test program.

Press [START/STOP] buttons to execute the test program.

The LED will display "PAS" if the test result is OK.

The LED will display "nG" if the test result is NG.

In either case, press the [START]/[STOP] button again and proceed to the next item. To return to the test items, press the [DEMO] Button.

## 4. Test items

| No. | LED display for each test | Test Function and Judgment criteria |
|---|---|---|
| 1 | r01: Version | Display version for ROM |
| 2 | r02: ROM Check 1 | Check all ROMs, which are connected to CPU. |
| 3 | r03: RAM Check 1 | Check all RAMs, which are connected to CPU. |
| 11 | r11: TG1 Check | Output the sine wave by changing the channels (1ch - 32ch) in sequence from F3 to C6. When a voice switch is depressed, the tone of the voice will sound. After auto scaling is finished, individual keys can be played. (If playing two or more keys simultaneously, the key pressed first takes priority.) |
| 13 | r13: PIT | Connect the frequency counter to the [PHONES] terminal.<br>Check that the 441.0 +/- 0.2 Hz sine wave is output. |
| 14 | r14: Output R Check | R channel output level (1kHz).<br>AUX OUT L/L+R: Should be lower than R channel by more than 60dB.<br>AUX OUT R: -14dBm<br>PHONES L: Should be lower than R channel by more than 60dB.<br>PHONES R: -25dBm |
| 15 | r15: Output L Check | L channel output level (1kHz).<br>AUX OUT L/L+R: -14dBm<br>AUX OUT R: Should be lower than L channel by more than 60dB.<br>PHONES L: -25dBm<br>PHONES R: Should be lower than L channel by more than 60dB. |

| | | |
|---|---|---|
| 16 | r 16: EQ Low | For factory test use only |
| 17 | r 17: EQ Mid | For factory test use only |
| 18 | r 18: EQ High | For factory test use only |
| 19 | r 19: D/A Noise | D/A Noise Checks D/A converter noise.<br>Play a note and check that there is no noise during the PIANO 1 release time. (PAN=center) |
| 20 | r20: SW, LED Check | Checks switch and LED's on the panel<br>Play the switch, which is displayed on the LED's. (The order is shown in the Table 1.)<br>A pre-assigned note is output when the switches are pressed. (With some switches, the corresponding LED will light up.) |
| 21 | r21: All Panel LED ON | Check that all panel LED's are lit.<br>Executes the test and check that all panel LED's are lit. |
| 31 | r31: Soft Pedal Check | Check that C3 is output when pushing the pedal and C4 is output when releasing the pedal, and that the LED display "PAS". |
| 32 | r32: Soste. Pedal Check | Check that C3 is output when pushing the pedal and C4 is output when releasing the pedal, and that the LED display "PAS". |
| 33 | r33: Damper Pedal Check | Check that C3 is output when pushing the pedal and C4 is output when releasing the pedal, and that the LED display "PAS". |
| 37 | r37: MIDI Check | Checks the MIDI.<br>After connecting the [MIDI IN] and [MIDI OUT] with a MIDI cable, execute the test.<br>Check that the C4 note is output and the test result appears on the LED. |
| 38 | r38: To Host Check | Connect pin 1 to pin 2, pin3 to pin5, and pin6 to pin 8 on the TO HOST terminal, and execute the test.<br>Check that the following notes are output when changing the HOST SELECT switch position according to the LED intication, and that the LED displays "OK".<br>Mac position: C5, PC-2 position: C4, PC-1 position: C3 |
| 41 | r41: ROM Check2 | For factory test use only |
| 42 | r42: RAM Check2 | For factory test use only |
| 46 | r46: Back up Check2 | For factory test use only |
| 47 | r47: Factory Set | Executes the test to erase all the contents of the Flash ROM. |
| 48 | r48: Test Mode Exit | Exit from the test program when executing this test. |

0dBm = 1mW, 0dBm = 0.775V

• **Table 1**

| SW No. | SWITCH | NOTE | LED | SW No. | SWITCH | NOTE | LED |
|---|---|---|---|---|---|---|---|
| S01 | DEMO | C3 | | S12 | FUNCTION | B3 | ● |
| S02 | TRANSPOSE | C#3 | ● | S13 | TEMPO - | C4 | |
| S03 | REVERB | D3 | ● | S14 | TEMPO + | C#4 | |
| S04 | TOUCH | D#3 | ● | S15 | PIANO SONG | D4 | ● |
| S05 | GRAND PIANO | E3 | ● | S16 | SONG SELECT - | D#4 | |
| S06 | E. PIANO | F3 | ● | S17 | SONG SELECT + | E4 | |
| S07 | HARPSICHORD | F#3 | ● | S18 | RECORDER 1 | F4 | ● |
| S08 | STRINGS | G3 | ● | S19 | RECORDER 2 | F#4 | ● |
| S09 | PIPE ORGAN | G#3 | ● | S20 | START / STOP | G4 | |
| S10 | VARIATION | A3 | ● | S21 | REC | G#4 | |
| S11 | METRONOME | A#3 | ● | | | | |

# ■ INSPECTIONS

## 1. AUX OUT and PHONES

1-1 Apply a 1kHz, -20dBm sine wave to the AUX IN L/L+R. Confirm that the output meets the following specifications:

AUX OUT L/L+R: -10dBm +/- 2dB
AUX OUT R: -21dBm +/- 2dB
PHONES L: L/L+R less than -60dB
PHONES R: L/L+R less than -60dB

1-2 Apply a 1kHz, -20dBm sine wave to the AUX IN R. Confirm that the output meets the following specifications:

AUX OUT L/L+R: -21dBm +/- 2dB
AUX OUT R: -10dBm +/- 2dB
PHONES L: R less than -60dB
PHONES R: R less than -60dB

## 2. Noise level

Confirm that the PHONES L and R output noise level is less than -90dBm when no sound is produced.

Note: 0dBm = 0.775V

YAMAHA
Model YDP-201 MIDI Implementation Chart

Date: 11/4, 1998
Version: 1.1

| Function ... | | Transmitted | Recognized | Remarks |
|---|---|---|---|---|
| Basic | Default | 1 | 1 | |
| Channel | Changed | 1 - 16 | 1 - 16 | |
| | Default | 3 | 1 *1 | Poly Mode Only |
| Mode | Messages | x | x | |
| | Altered | ********** | x | |
| Note | | 9 - 120 | 0 - 127 | |
| Number: | True voice | ********** | 21 - 108 | |
| Velocity | Note ON | o 9nH, v=1 - 127 | o v=1 - 127 | |
| | Note OFF | x 9nH, v=0 | x | |
| After | Key's | x | x | |
| Touch | Ch's | x | x | |
| Pitch Bend | | x | x | |
| | 0, 32 | o | o | Bank Select |
| | 7 | x | o | Volume |
| | 11 | x | o | Expression |
| Control | 64 | o | o | Damper |
| | 66 | o | o | Sostenuto |
| Change | 67 | o | o | Soft Pedal |
| | 91 | o | o | Reverb Depth |
| | 120 | x | o | All Sound Off |
| | 121 | x | o | Reset All Controllers |
| Prog | | o | o | |
| Change: | True # | ********** | | |
| System Exclusive | | o | o | |
| System: | Song Pos. | x | x | |
| | Song Sel. | x | x | |
| Common: | Tune | x | x | |
| System: | Clock | o | o | |
| Real Time: | Commands | o | o | |
| Aux: | Local ON/OFF | x | o | |
| | All Notes OFF | o | o (123 - 127) | |
| Mes-: | Active Sense | o | o | |
| sages: | Reset | x | x | |

Notes: *1 = Receive Mode is always multi timbre and Poly mode.

Mode 1: OMNI ON, POLY
Mode 2: OMNI ON, MONO
Mode 3: OMNI OFF, POLY
Mode 4: OMNI OFF, MONO

o: Yes
x: No

# DIGITAL PIANO
# YDP-201

# PARTS LIST

■ **CONTENTS**


OVERALL ASSEMBLY ..... 2
MAIN UNIT ..... 4
MAINBOX ASSEMBLY ..... 5
SIDE BOARD ASSEMBLY ..... 8
PEDAL BOX ASSEMBLY ..... 9
PEDAL ASSEMBLY ..... 10
TOP BOARD & MUSIC REST ..... 11
END BLOCK ASSEMBLY (L, R) ..... 12
CONTROL PANEL ASSEMBLY ..... 13
KEY COVER ASSEMBLY ..... 14
POWER SUPPLY UNIT ..... 15
KEYBOARD ASSEMBLY ..... 16
BENCH ..... 17
ELECTRICAL PARTS ..... 18


Note) DESTINATION ABBREVIATIONS

| | | | |
|---|---|---|---|
| A: | Australian model | M: | South African model |
| B: | British model | O: | Chinese model |
| C: | Canadian model | Q: | South-east Asia model |
| D: | German model | T: | Taiwan model |
| E: | European model | U: | U.S.A. model |
| F: | French model | V: | General export model (110V) |
| H: | North European model | W: | General export model (220V) |
| I: | Indonesian model | N,X: | General export model |
| J: | Japanese model | Y: | Export model |

■ WARNING

Components having special characteristics are marked ⚠ and must be replaced with parts having specifications equal to those originally installed.

■ The numbers in “QTY” shows quantities for each unit.
■ The parts with “--” in “Part No.” are not available as spare parts.
■ The second letter of the shaded ( ) part number is I, not one.
■ The second letter of the shaded ( ) part number is O, not zero.
■ This mark “ } “ in the REMARKS column means these parts are interchangeable.

# ■ OVERALL ASSEMBLY

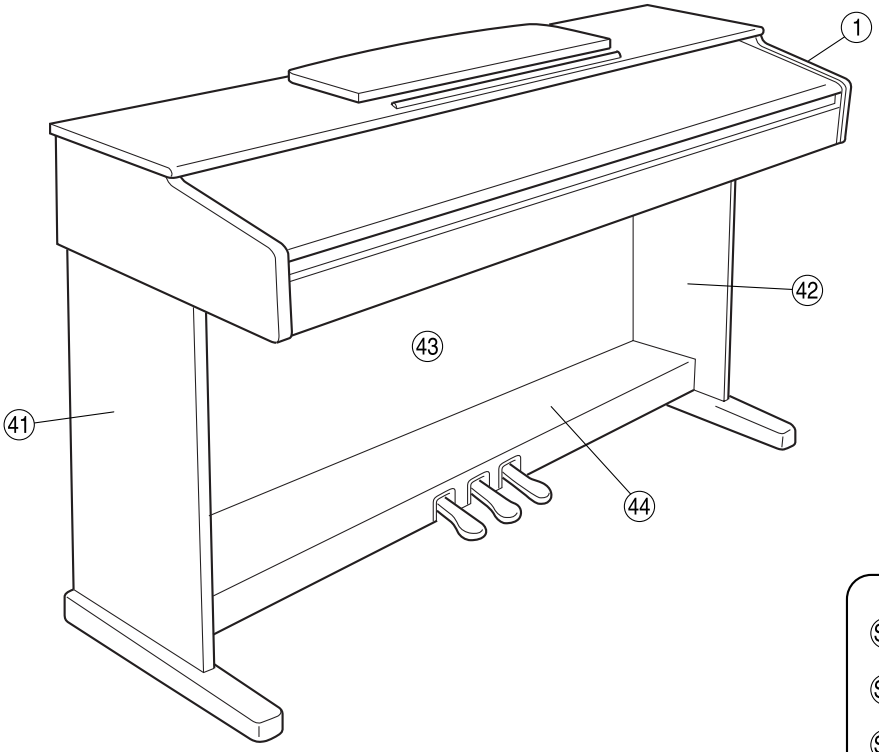


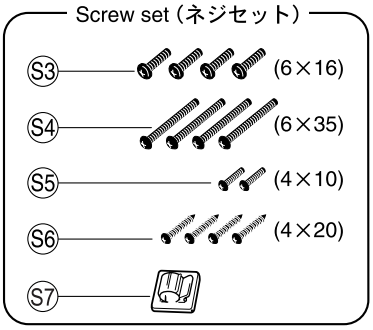


**● Front view**

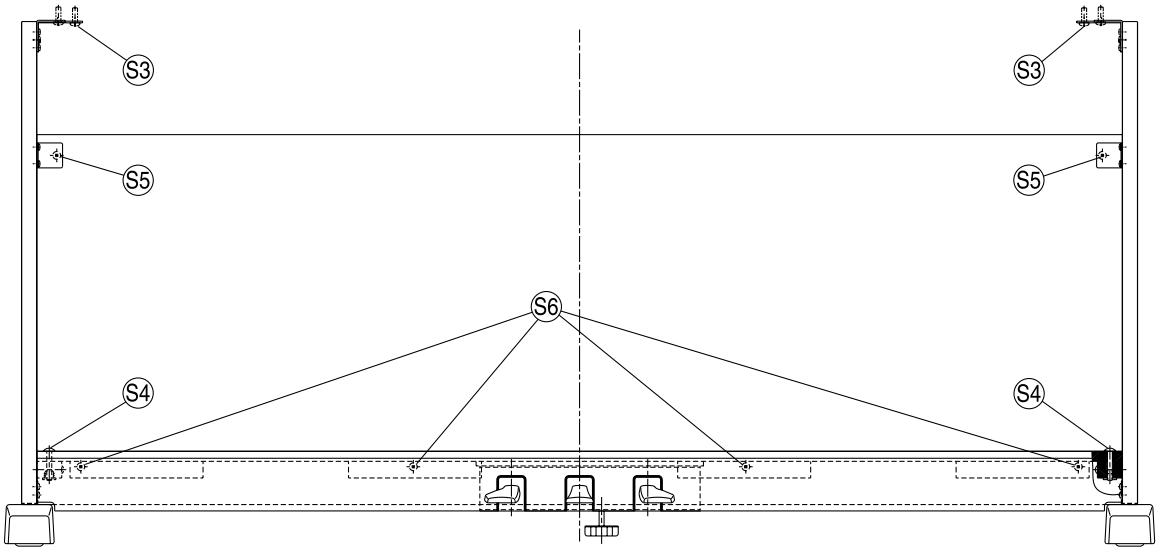

| REF NO. | PART NO. | DESCRIPTION | | | REMARKS | QTY | RANK |
|---|---|---|---|---|---|---|---|
| | | OVERALL ASSEMBLY | | | YDP201 | | |
| | | Overall Assembly | | | | | |
| 1 | -- | Main Unit | | | (V463790) | | |
| 1 | -- | Main Unit | | | N (V793270) | | |
| 32 | VK726100 | Connector | Plug CCT5902 | | N | | 03 |
| 41 | -- | Side Board & Stand Base | LEFT | | (V464200) | | |
| 42 | -- | Side Board & Stand Base | RIGHT | | (V464210) | | |
| 43 | VV443500 | Back Board Set | #2575 | | | | 11 |
| 44 | -- | Pedal Box Assembly | | | (V308490) | | |
| | | | | | | | |
| | | ACCESSORIES | | | | | |
| | -- | Bench | CL BC-X | | (VV44340) | | |
| | VT044200 | Headphone | P402416N2410 | | | | 09 |
| | V5771000 | Headphone | 059711 | | | | 07 |
| | AAX08970 | Ear Pad | 2 pcs. | | | | 04 |
| | VT015700 | AC Cord Set | 2P 2.5m 7A | | J | | 05 |
| | V2916900 | AC Cord Set | 2P 7A 2.5m | | J | | 05 |
| | V3126200 | AC Cord Set | 2P 2.5m 7A | | J | | |
| | VT015900 | AC Cord Set | 2P 2.5m | | N | | 05 |
| | V2917100 | AC Cord Set | 2P 2.5m 2.5A | | N | | 05 |
| | V3126300 | AC Cord Set | 2P 2.5m | | N | | |
| | V6002600 | Screw Set | 4 | | | | 04 |
| | | | | | | | |
| | V6002600 | Screw Set | | | | | 04 |
| S2 | -- | Label | | | (V317610) | | |
| S3 | EG360020 | Bind Head Screw | 6.0X16 MFZN2BL | | | 4 | 01 |
| S4 | VS880300 | Truss Head Screw | 6.0X35 MFZN2BL | | | 4 | |
| S5 | VT196400 | Truss Head Screw | 4.0X10 MFZN2BL | | | 2 | 01 |
| S6 | 03747330 | Truss Head Tapping Screw-1 | 4.0X16 MFZN2BL | | | 4 | 01 |
| S7 | VR410300 | Cord Clamp Set | | | | | 03 |
| | | | | | | | |
| | | JIGS | | | | | |
| | TX000670 | Rod | | | | | |

*: New Parts

RANK: Japan only

# ■ MAIN UNIT

- **Rear view**

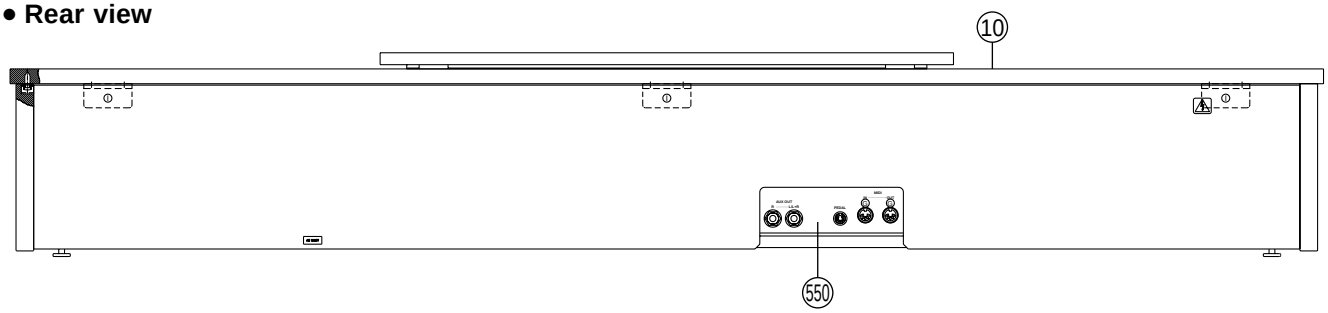


- **Top view**

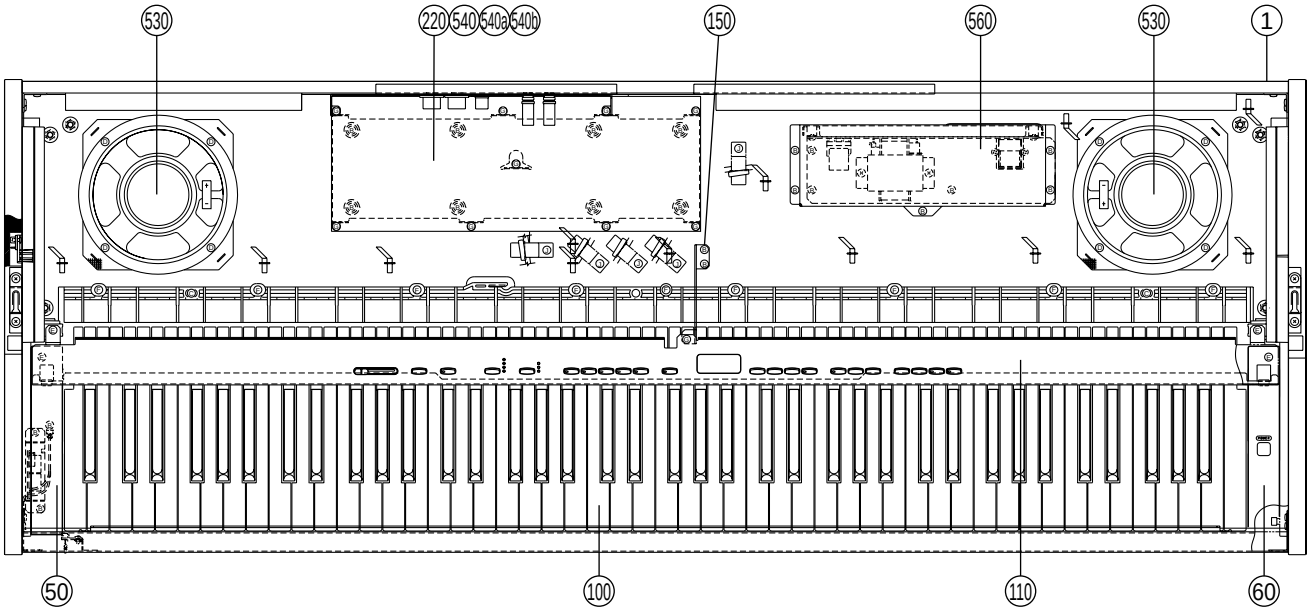


- **Bottom view**

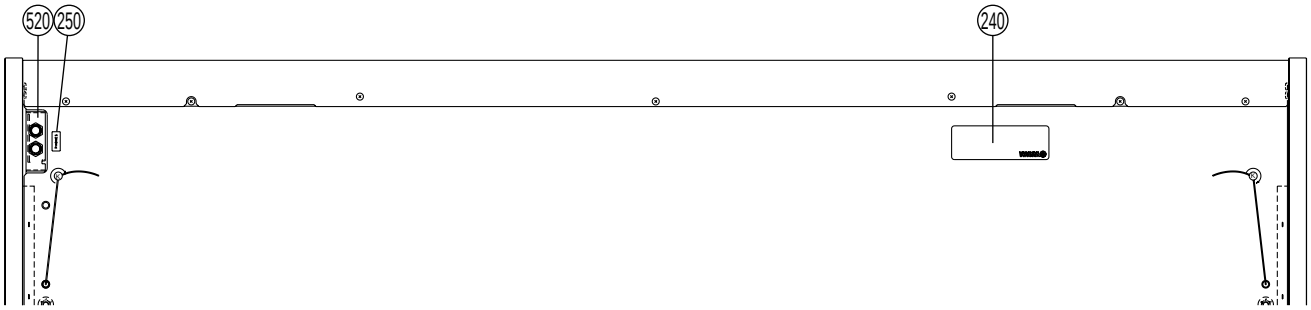


- **Side view**

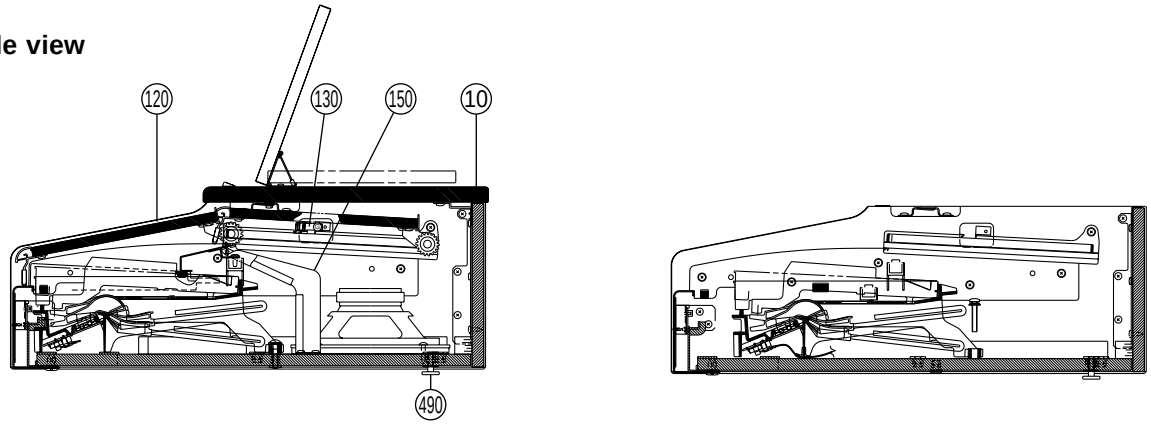

# ■ MAINBOX ASSEMBLY

• **Top view**

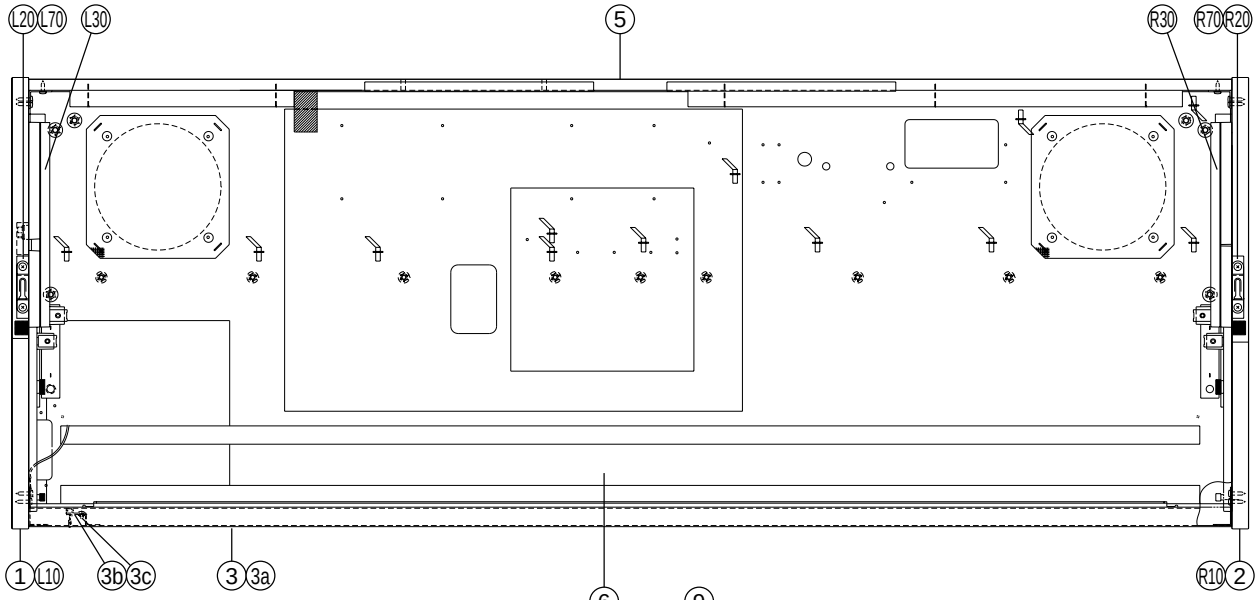


• **Bottom view**

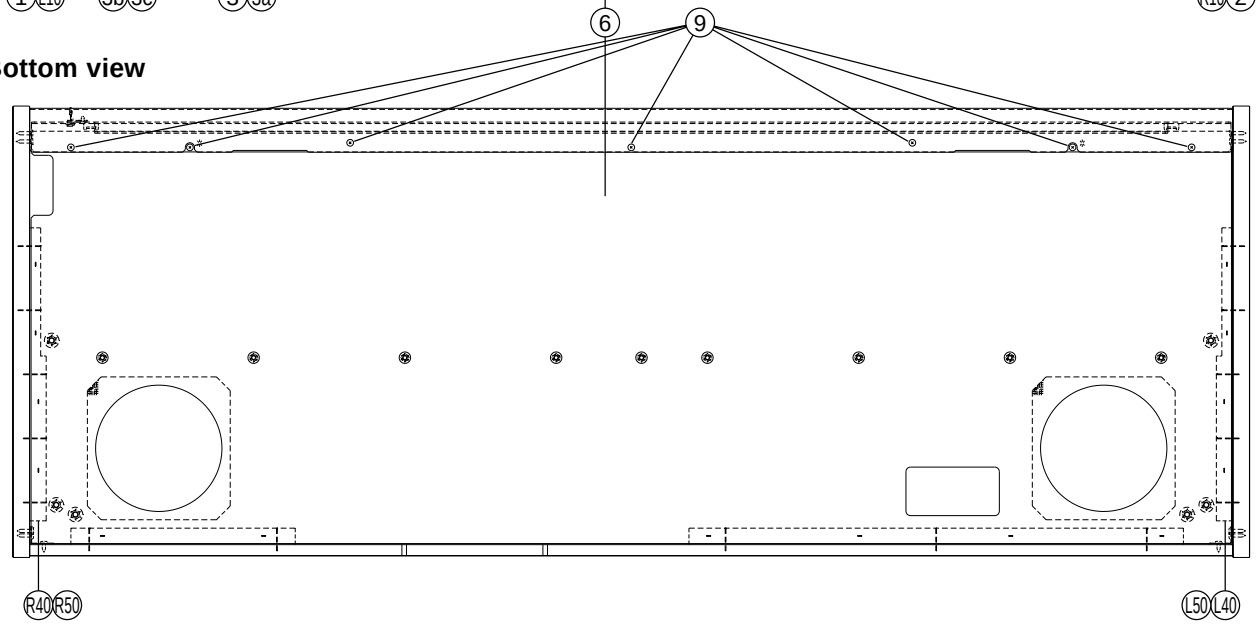


• **Side view**

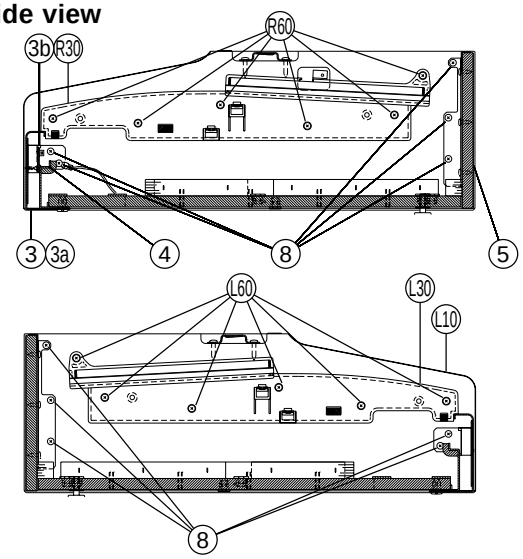


| | | | |
|---|---|---|---|
| Ⓑ | 330 | Bind Head Tapping Screw-1 (EP030340) | 18 |
| Ⓒ | 340 | Bind Head Tapping Screw-1 (EP040230) | 2 |
| Ⓓ | 360 | Truss Head Tapping Screw-1 (20338800) | 8 |
| Ⓔ | 370 | Bind Head Tapping Screw-B (EP600240) | 4 |
| Ⓕ | 380 | Pan Head Screw (VV040700) | 9 |
| Ⓖ | 390 | Bind Head Tapping Screw-B (EP600190) | 13 |
| Ⓘ | 410 | Truss Head Tapping (EP040230) | 3 |
| Ⓙ | 420 | Truss Head Tapping Screw-1 (EN630230) | 1 |
| Ⓚ | 430 | Bind Head Tapping Screw-1 (EP030230) | 2 |

| REF NO. | PART NO. | DESCRIPTION | | | REMARKS | | QTY | RANK |
|---|---|---|---|---|---|---|---|---|
| | | MAIN UNIT | | | YDP201 | | | |
| | -- | Main Unit | | | J | (V463790) | | |
| | -- | Main Unit | | | N | (V793270) | | |
| | -- | Main Unit-Sub Assembly | | | | (V463820) | | |
| 1 | V4642200 | Main Box Assembly | | | | | | 34 |
| 110 | -- | Control Panel Assembly | | | | (V464240) | | |
| 240 | -- | Name Plate | | | J | (V464150) | | |
| 240 | -- | Name Plate | | | J | (V464160) | | |
| 240 | -- | Name Plate | | | N | (V793290) | | |
| 560 | V0010200 | Power Supply Unit | | | J | | | 14 |
| 560 | V0010500 | Power Supply Unit | | | N | | | 22 |
| 580 | -- | Connector Assembly | POWER | | | (V004510) | | |
| 590 | -- | Connector Assembly | SP | | | (V004520) | | |
| 600 | -- | Connector Assembly | HP | | | (V220540) | | |
| | | | | | | | | |
| | -- | Main Unit-Sub Assembly | | | | (V463820) | | |
| 10 | -- | T.Board & M.Rest Assembly | | | | (V464230) | | |
| 50 | VV603300 | End Block Assembly | | | | | | 05 |
| 60 | VV877400 | End Block Assembly | | | | | | 11 |
| 100 | V0042800 | Keyboad Assembly | A88 K6 | | | | | 49 |
| 120 | V3083200 | Key Cover Assembly | | | | | | 20 |
| 130 | VS312100 | Rack Cover | LEFT | | | | | 03 |
| 150 | -- | Panel Holder Assembly | | | | (V472340) | | |
| 220 | VZ957700 | Holder, M Circuit Board | | | | | | 06 |
| 250 | -- | Label, PHONES | | | | (VS47810) | | |
| 270 | VP834600 | Adhesive Tape | 12X50 | | | | | 02 |
| 330 | EP030340 | Bind Head Tapping Screw-1 | 3.5X12 MFZN2BL | | | | 18 | 01 |
| 340 | EP040230 | Bind Head Tapping Screw-1 | 4.0X14 MFZN2Y | | | | 2 | 01 |
| 360 | 20338800 | Truss Head Tapping Screw-1 | 4X20 MFZN2Y | | | | 8 | 01 |
| 370 | EP600240 | Bind Head Tapping Screw-B | 4.0X10 MFZN2BL | | | | 4 | 01 |
| 380 | VV040700 | Pan Head Screw | 5.0X25 MFZN2Y PW | | | | 9 | 01 |
| 390 | EP600190 | Bind Head Tapping Screw-B | 3.0X8 MFZN2BL | | | | 13 | 01 |
| 410 | VB934000 | Truss Head Screw | 4.0X20 MFZN2BL | | | | 3 | 01 |
| 420 | EN630230 | Truss Head Tapping Screw-1 | 3.5X14 MFZN2Y | | | | | 01 |
| 430 | EP030240 | Bind Head Tapping Screw-1 | 3.5X12 MFZN2Y | | | | 2 | 01 |
| 490 | VN887900 | Guide Screw | 6X14 | | | | 2 | 03 |
| 520 | -- | Headphones Jack Assembly | | | | (V512890) | | |
| 520a | V5115100 | Circuit Board | HP | | | | | 08 |
| 520b | VN631800 | Holder, Phone Jack | | | | | | 04 |
| 520c | VB508600 | Hexagonal Nut | 12.0 14X2 MFZN2BL | | | | 2 | 01 |
| 530 | XS419A00 | Speaker | 16.0cm 4 ohm 20W | | | | 2 | 08 |
| 540 | -- | Circuit Board Assembly | M | | | (V484290) | | |
| 540a | V3066400 | Circuit Board | DM | | | | | 20 |
| 540b | V4843000 | Circuit Board | M | | | | | 19 |
| 550 | -- | Jack Plate | | | | (V308630) | | |
| 610 | -- | Connector Assembly | MK-LF | | | (VV85230) | | |
| 610a | VD947800 | Data Line Filter | ESD-R-25D-B | | | | | 05 |
| 620 | -- | Connector Assembly | 2P-150 | | | (VK09960) | | |
| | | | | | | | | |
| | V4642200 | Main Box Assembly | | | | | | 34 |
| 1 | -- | Side Cover Assembly | LEFT | | | (V464290) | | |
| 2 | -- | Side Cover Assembly | RIGHT | | | (V464300) | | |
| 3 | -- | Front Rail Assembly | | | | (V468790) | | |
| 3a | V4688000 | Front Rail | | | | | | 12 |
| 3b | VN637600 | Circuit Board | CLP,CVP PL(YCJ) | | | | | 03 |
| 3b | VU659100 | Circuit Board | CLP,CVP.PL(YMMA) | | | | | 03 |
| 3c | EP600230 | Bind Head Tapping Screw-B | 3.0X6 MFZN2BL | | | | | 01 |
| 4 | V4008900 | Holder Assembly, Keyboard | #2642 | | | | | 08 |
| 5 | -- | Back Top Board Assembly | J | | | (V464310) | | |
| 6 | -- | Keybed Assembly | J | | | (V464340) | | |
| 8 | EP030190 | Bind Head Tapping Screw-1 | 3.5X16 MFZN2Y | | | | 10 | 01 |
| 9 | EP030250 | Bind Head Tapping Screw-1 | 3.5X14 MFZN2BL | | | | 7 | 01 |
| | | | | | | | | |
| | -- | Side Cover Assembly | LEFT | | | (V464290) | | |
| L10 | -- | Side Cover | LEFT | | | (V464420) | | |
| L20 | VV444200 | Holder, Top Board | 1.20 Black | | | | | 03 |
| L30 | VV282800 | Inner Cap Assembly | LEFT | | | | | 07 |
| L40 | -- | Crosspiece | | | | (V464470) | | |
| L50 | -- | Dust Proof Cloth | 15X15X0.9 | | | (VZ08590) | | |
| L60 | EP030260 | Bind Head Tapping Screw-1 | 3.5X16 MFZN2BL | | | | 6 | 01 |

*: New Parts

RANK: Japan only

| REF NO. | PART NO. | DESCRIPTION | | | REMARKS | QTY | RANK |
|---|---|---|---|---|---|---|---|
| L70 | **EP040070** | Bind Head Tapping Screw-1 | 4.0X20 MFZN2BL | | | 2 | 01 |
| | | | | | | | |
| | -- | Side Cover Assembly | RIGHT | | (V464300) | | |
| R10 | -- | Side Cover | RIGHT | | (V464430) | | |
| R20 | **VV444200** | Holder, Top Board | 1.20 Black | | | | 03 |
| R30 | **VV282900** | Inner Cap Assembly | RIGHT | | | | 07 |
| R40 | -- | Crosspiece | | | (V464470) | | |
| R50 | -- | Dust Proof Cloth | 15X15X0.9 | | (VZ08590) | | |
| R60 | **EP030260** | Bind Head Tapping Screw-1 | 3.5X16 MFZN2BL | | | 6 | 01 |
| R70 | **EP040070** | Bind Head Tapping Screw-1 | 4.0X20 MFZN2BL | | | 2 | 01 |

*: New Parts

RANK: Japan only

# ■ SIDE BOARD ASSEMBLY

• Top view

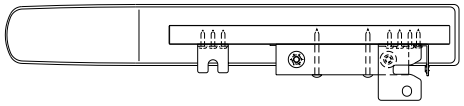

• Front view (L)

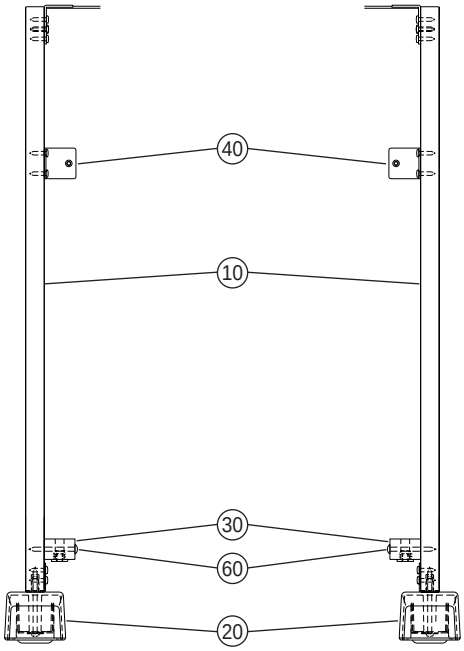


• Front view (R)



• Side view

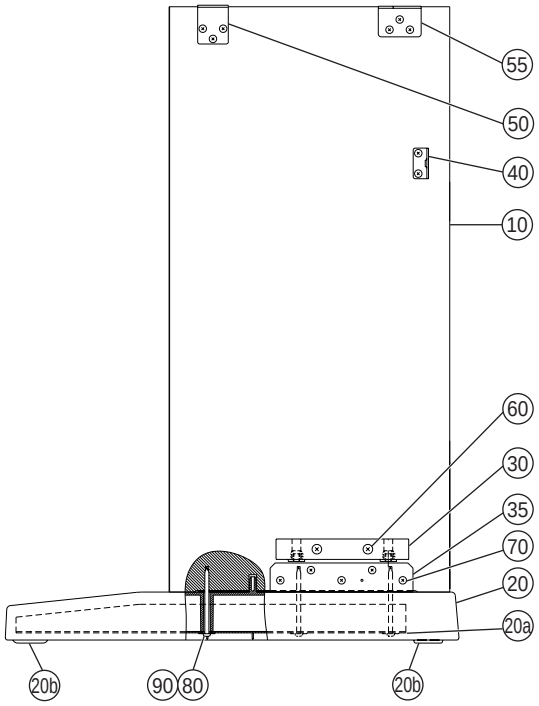


| REF NO. | PART NO. | DESCRIPTION | | | REMARKS | QTY | RANK |
|---|---|---|---|---|---|---|---|
| | | SIDE BOARD & STAND BASE | | | YDP201 | | |
| | -- | Side Board & Stand Base | LEFT | | (V464200) | | |
| | -- | Side Board & Stand Base | RIGHT | | (V464210) | | |
| 10 | V4642500 | Side Board | LEFT | | | | 12 |
| 10 | V4642600 | Side Board | RIGHT | | | | 12 |
| 20 | V3316300 | Stand Base Assembly | | | | 2 | 08 |
| 20a | VI235200 | Foot | | | | 2 | 01 |
| 20b | VA914400 | Bind Head Tapping Screw-B | 4.0X12 MFZN2Y | | | 6 | 01 |
| 30 | -- | Pedal Box Stopper | | | (VZ18000) | 2 | |
| 35 | VY824800 | Angle | LEFT | | | | 03 |
| 35 | VY824900 | Angle | RIGHT | | | | 03 |
| 40 | VQ958300 | Holder, Back Board | | | | 2 | 05 |
| 50 | -- | Angle Bracket | | | (V464270) | 2 | |
| 55 | VS295500 | ST Holder | LEFT | | | | 05 |
| 55 | VS295600 | ST Holder | RIGHT | | | | 05 |
| 60 | VQ488900 | Truss Head Tapping Screw-1 | 4.0X45 MFZN2Y | | | 4 | 01 |
| 70 | EP030260 | Bind Head Tapping Screw-1 | 3.5X16 MFZN2BL | | | 26 | 01 |
| 80 | VV444000 | Pan Head Tapping Screw-1 | 4.0X65 MFZN2Y | | | 6 | 01 |
| 90 | 03765410 | Flat Washer | 4.0X10X0.8 MFZN2Y | | | 6 | 01 |

*: New Parts

RANK: Japan only

# ■ PEDAL BOX ASSEMBLY

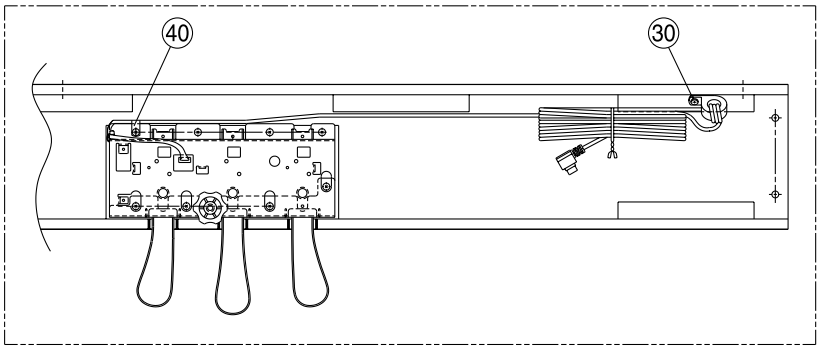


• **Bottom view**

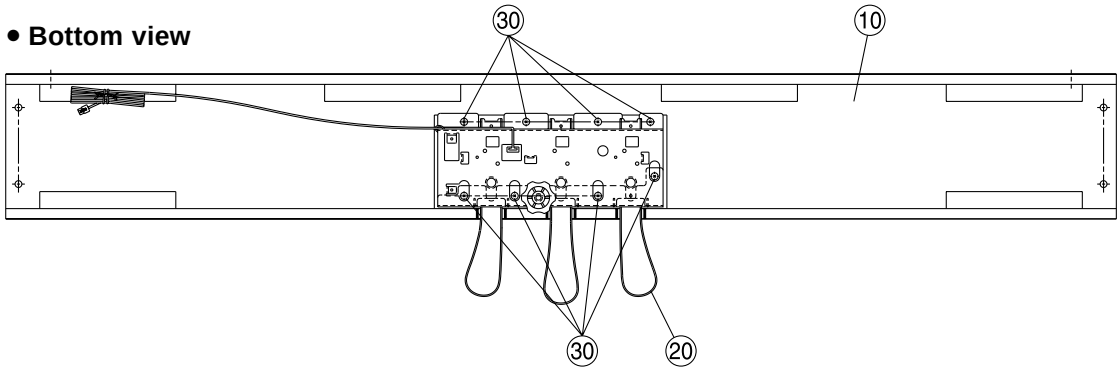


• **Side view**

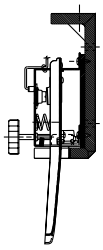

• **Front view**

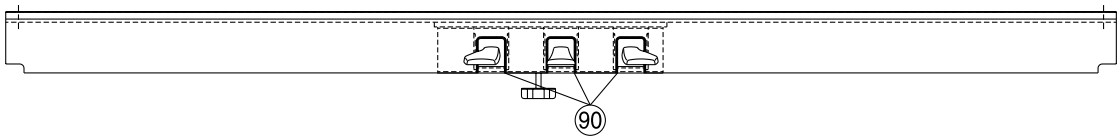


| REF NO. | PART NO. | DESCRIPTION | | | REMARKS | QTY | RANK |
|---|---|---|---|---|---|---|---|
| | | PEDAL BOX ASSEMBLY | | | YDP201 | | |
| | -- | Pedal Box Assembly | | | (V308490) | | |
| 10 | **V3085700** | Pedal Box | | | | | 15 |
| 20 | **V0053700** | Pedal Assembly | | | | | 18 |
| 30 | **EP040230** | Bind Head Tapping Screw-1 | 4.0X14 MFZN2Y | | | 9 | 01 |
| 40 | **CB065520** | Nylon Clamp | NK-3N | | | | 01 |
| 90 | **VU464300** | Felt | 115X12X2 RE | | | 3 | 03 |

*: New Parts

RANK: Japan only

# ■ PEDAL ASSEMBLY

• **Top view**

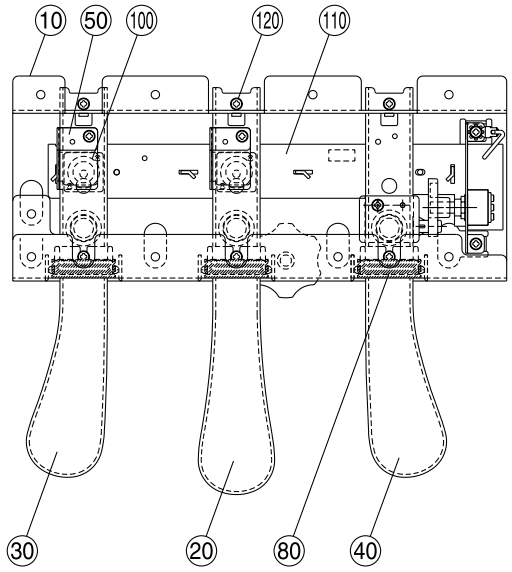


• **Side view**

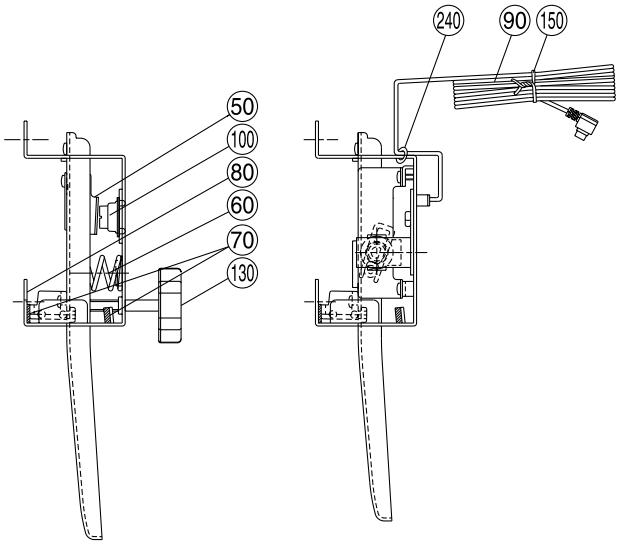


| REF NO. | PART NO. | DESCRIPTION | | | REMARKS | QTY | RANK |
|---|---|---|---|---|---|---|---|
| | | PEDAL ASSEMBLY | | | YDP201 | | |
| | **V0053700** | Pedal Assembly | | | | | 18 |
| 10 | **VU339700** | Pedal Frame | | | | | 09 |
| 20 | **VU362000** | Pedal Piece | CENTER | | sostenuto | | 08 |
| 30 | **VU362100** | Pedal Piece | LEFT | | soft | | 08 |
| 40 | **VU362200** | Pedal Piece | RIGHT | | damper | | 08 |
| 50 | **VV433500** | Actuator | PEDAL | | | 3 | 03 |
| 60 | **VP348100** | Pedal Spring | | | | 3 | 03 |
| 70 | **VU346500** | Felt | BL | | | 6 | 03 |
| 80 | **VU339800** | Shutter | PEDAL | | | 3 | 03 |
| 90 | **V0044700** | PK Cable | PK-LF | | | | 08 |
| 100 | **VU456000** | Rubber Contact | 1 PEDAL | | | 3 | 03 |
| 110 | **V2337300** | Circuit Board | PEDAL | | | | 07 |
| 120 | **EP600190** | Bind Head Tapping Screw-B | 3.0X8 MFZN2BL | | | 10 | 01 |
| 130 | **VU379700** | Adjuster | | | | | 02 |
| 140 | **--** | Grease | G-31KA | | (VE96850) | | |
| 150 | **CB033610** | Cord Binder | L=160 | | | | 01 |
| 240 | **CB069250** | Cord Holder | BK-1 | | | 2 | 01 |

*: New Parts

RANK: Japan only

# ■ TOP BOARD & MUSIC REST

**• Top view**

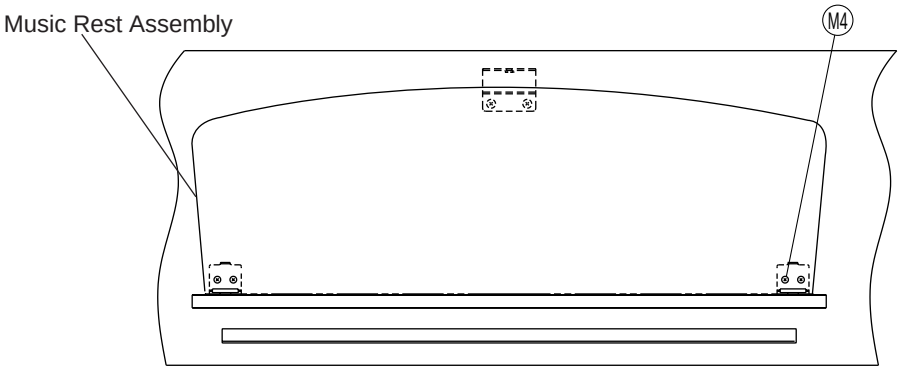


**• Side view**

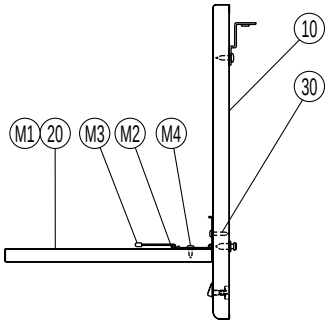


**• Rear view**

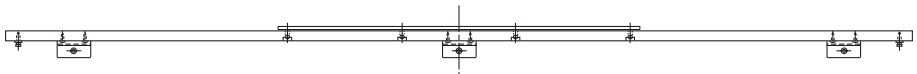

**• Side view**

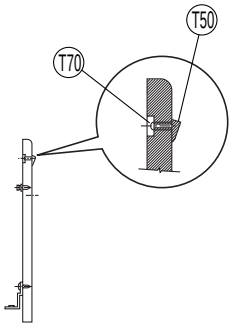


**• Bottom view**

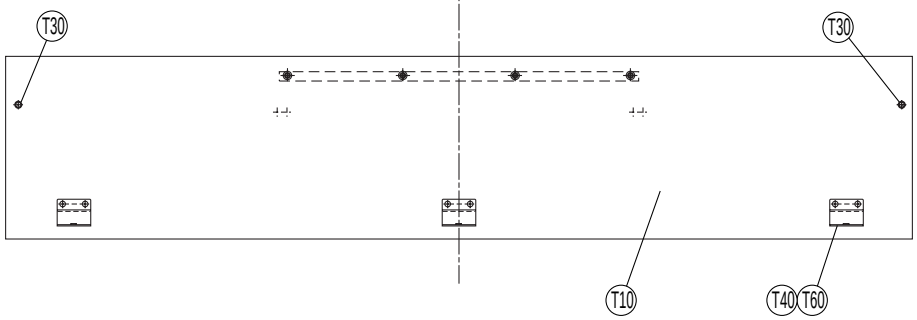


| REF NO. | PART NO. | DESCRIPTION | | | REMARKS | QTY | RANK |
|---|---|---|---|---|---|---|---|
| | | T.BOARD & M.REST ASSEMBLY | | | YDP201 | | |
| | -- | T.Board & M.Rest Assembly | | | (V464230) | | |
| 10 | V4643900 | Top Board Assembly | | | | | 08 |
| 20 | V3086000 | Music Rest Assembly | | | | | 14 |
| 30 | EP030310 | Bind Head Tapping Screw-1 | 3.0X16 MFZN2BL | | | 4 | 01 |
| | | | | | | | |
| | V4643900 | Top Board Assembly | | | | | 08 |
| T10 | -- | Top Board | | | (V464630) | | |
| T30 | VV444100 | Screw | | | | 2 | 03 |
| T40 | VQ485800 | Holder, Top Board | RIGHT | | | 3 | 05 |
| T50 | V2780400 | Stopper Rail, Music Score | | | | | 05 |
| T60 | EP040230 | Bind Head Tapping Screw-1 | 4.0X14 MFZN2Y | | | 6 | 01 |
| T70 | VZ179200 | PW Head PC Screw | 2.2X5.8 MFZN2Y | | | 4 | 01 |
| | | | | | | | |
| | V3086000 | Music Rest Assembly | | | | | 14 |
| M1 | -- | Music Rest | | | (V308700) | | |
| M2 | VD255900 | Hinge | | | | 2 | 07 |
| M3 | CB054920 | Cap | BL | | | 2 | 01 |
| M4 | 20404200 | Bind Head Tapping Screw-1 | 3.0X10 MFZN2BL | | | 4 | |

*: New Parts

RANK: Japan only

## ■ END BLOCK ASSEMBLY R

• **Side view**

• **Bottom view**

• **Power Switch Assembly**

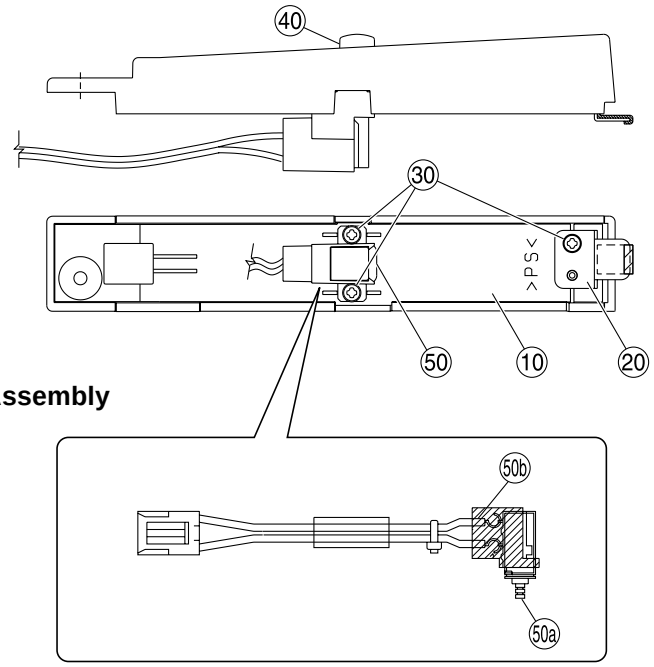


| REF NO. | PART NO. | DESCRIPTION | | | REMARKS | QTY | RANK |
|---|---|---|---|---|---|---|---|
| | | END BLOCK ASSEMBLY R | | | YDP-201 | | |
| | **VV877400** | End Block Assembly | RIGHT | | | | 11 |
| 10 | **V4686200** | End Block Sub Assembly | RIGHT | | | | 04 |
| 20 | **VL732000** | Holder Assembly | | | | | 04 |
| 30 | **EP600190** | Bind Head Tapping Screw-B | 3.0X8 MFZN2BL | | | 3 | 01 |
| 40 | **VF663400** | Knob | BL | | | | 02 |
| 50 | **VS353700** | Power Switch Assembly | | | | | 08 |
| 50a | **VC843500** | Push Switch | SDDLB1216A J.U.C.S | | POWER | | 03 |
| 50b | **V5800800** | Switch Cover | IVOLY | | POWER | | 01 |

*: New Parts

RANK: Japan only

## ■ END BLOCK ASSEMBLY L

• **Side view**

• **Bottom view**

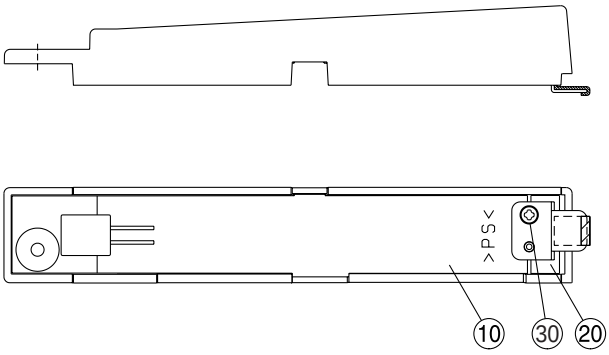


| REF NO. | PART NO. | DESCRIPTION | | | REMARKS | QTY | RANK |
|---|---|---|---|---|---|---|---|
| | | END BLOCK ASSEMBLY L | | | YDP201 | | |
| | -- | End Block Assembly | LEFT | | (VV60330) | | |
| 10 | **V4686300** | End Block Sub Assembly | LEFT | | | | 04 |
| 20 | **VL732000** | Holder Assembly | | | | | 04 |
| 30 | **EP600190** | Bind Head Tapping Screw-B | 3.0X8 MFZN2BL | | | | 01 |

*: New Parts

RANK: Japan only

# ■ CONTROL PANEL ASSEMBLY

• **Side view**

• **Bottom view**

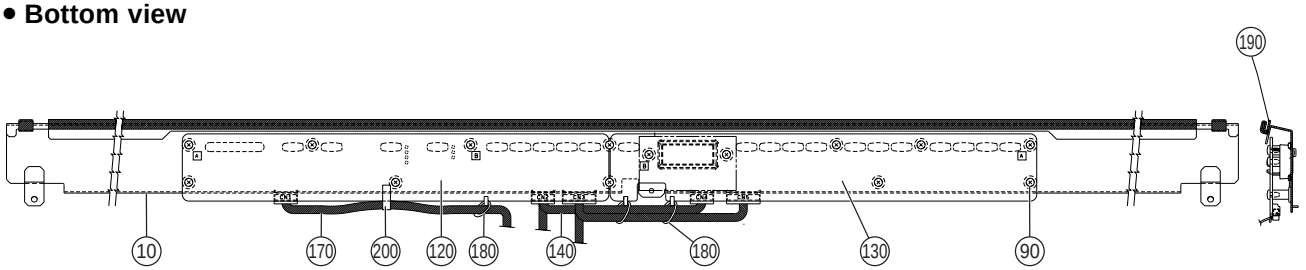


• **Top view**

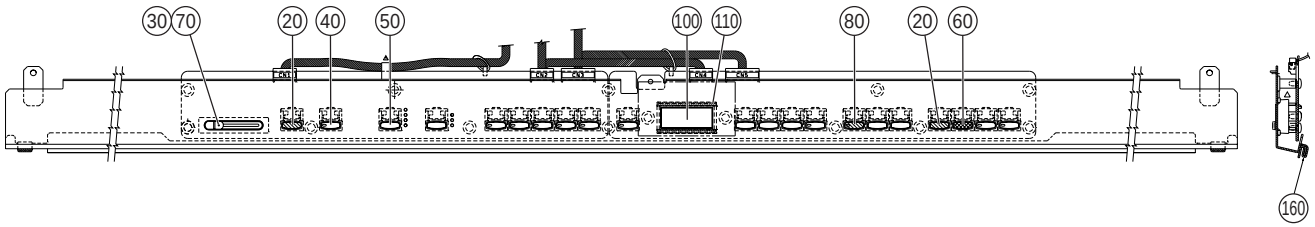


| REF NO. | PART NO. | DESCRIPTION | | | REMARKS | QTY | RANK |
|---|---|---|---|---|---|---|---|
| | | CONTROL PANEL ASSEMBLY | | | YDP201 | | |
| | -- | Control Panel Assembly | J | | (V464240) | | |
| 10 | **V4644000** | Control Panel | | | | | 10 |
| 20 | **VS513300** | Knob | GY | | DEMO,START/STOP | 2 | 03 |
| 30 | **VS179900** | Slide Knob | | | MASTER VOLUME | | 03 |
| 40 | **VS180000** | Knob with Lens | | | TRANSPOSE,GRAND PIANO, E.PIANO,HARPSICHORD, STRINGS,PIPE ORGAN, VARIATION,FUNCTION, TRACK1,TRACK2 | 10 | 03 |
| 50 | **VS180100** | Knob | | | REVERB,TOUCH,METRONOME, TEMPO DOWN,TEMPO UP, -/NO,+/YES | 7 | 03 |
| 60 | **VS311000** | Knob | RE | | REC | | 03 |
| 70 | **VK323500** | Escutcheon Assembly | | | | | 05 |
| 80 | **VS311100** | Knob with Lens | GY | | SONG | | 03 |
| 90 | **EP600230** | Bind Head Tapping Screw-B | 3.0X6 MFZN2BL | | | 14 | 01 |
| 100 | **VP889000** | Temp Housing | | | | | 04 |
| 110 | **V3237200** | Cushion | 45X3XT2 | | | 2 | |
| 120 | **V4843300** | Circuit Board | PNL J,U | | | | 08 |
| 130 | **V4843400** | Circuit Board | PNR J,U | | | | 08 |
| 140 | -- | Connector Assembly | KRD-KRD-KRD 8P PN1 | | (V309860) | | |
| 150 | -- | Connector Assembly | KRD-KRD-KRD 12PPN2 | | (V309870) | | |
| 160 | -- | Felt | 16X12X1 | | (V345580) | 2 | |
| 170 | -- | Connector Assembly | VOL | | (V222620) | | |
| 180 | **CB069250** | Cord Holder | BK-1 | | | 2 | 01 |
| 190 | -- | Felt | MK | | (V510750) | | |
| 200 | **VP834600** | Adhesive Tape | 12X50 | | | | 02 |

*: New Parts

RANK: Japan only

# ■ KEY COVER ASSEMBLY

• **Bottom view**

• **Side view**

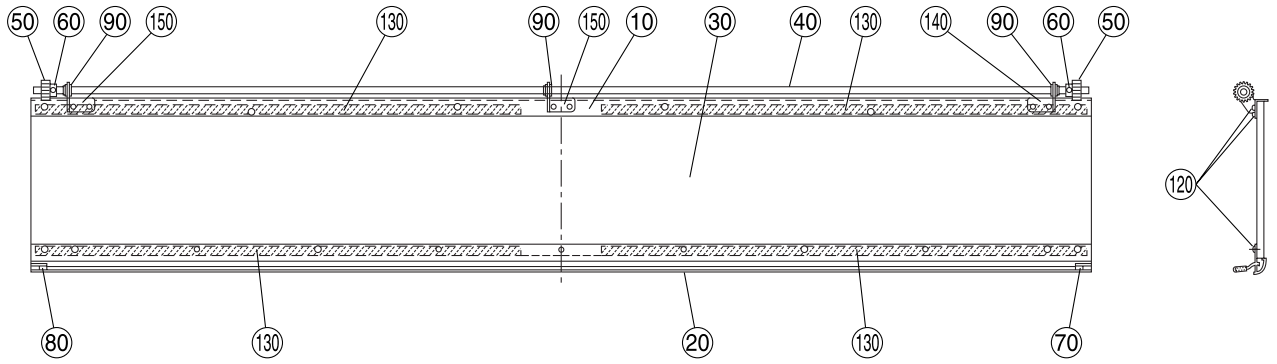


| REF NO. | PART NO. | DESCRIPTION | | | REMARKS | QTY | RANK |
|---|---|---|---|---|---|---|---|
| | | KEY COVER ASSEMBLY | | | YDP201 | | |
| | **V3083200** | Key Cover Assembly | | | | | 20 |
| 10 | **VV285500** | Sash | REAR | | | | 08 |
| 20 | **VV285800** | Sash | FRONT | | | | 12 |
| 30 | **--** | Slide Cover | | | (V308620) | | |
| 40 | **VU257800** | Rod | | | | | 09 |
| 50 | **VT190400** | Gear | | | | 2 | 03 |
| 60 | **EG330060** | Bind Head Screw | 3.0X10 MFZN2Y | | | 2 | 01 |
| 70 | **VS378000** | Sash Cover | BL LEFT | | | | 03 |
| 80 | **VS378100** | Sash Cover | BL RIGHT | | | | 03 |
| 90 | **VS368500** | Bushing | | | | 3 | 03 |
| 120 | **VN920900** | Bind Head Tapping Screw-1 | 3.5X8 MFZN2BL | | | 19 | 01 |
| 130 | **--** | Adhesive Tape | #500 600X12 | | (VO02370) | 4 | |
| 140 | **VV285600** | Holder, Rod | LEFT | | | | 03 |
| 150 | **VV285700** | Holder, Rod | RIGHT | | | 2 | 03 |

*: New Parts

RANK: Japan only

# ■ POWER SUPPLY UNIT

- **Top view**

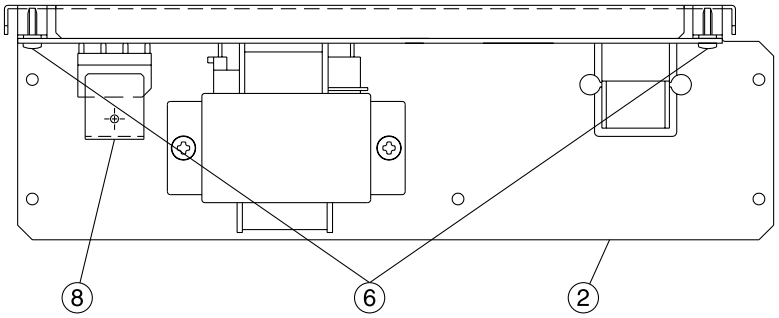


- **Front view**

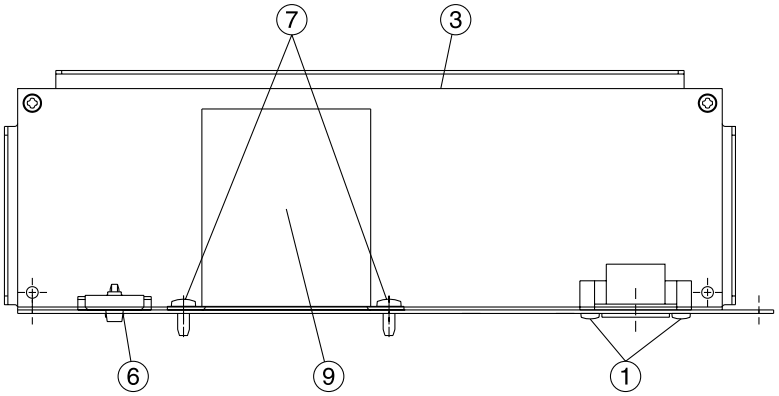


| REF NO. | PART NO. | DESCRIPTION | | | REMARKS | QTY | RANK |
|---|---|---|---|---|---|---|---|
| | | POWER SUPPLY UNIT | | | YDP201 | | |
| | **V0010200** | Power Supply Unit | | | J | | 14 |
| | **V0010500** | Power Supply Unit | | | N | | 22 |
| 1 | **EP600140** | Bind Head Tapping Screw-B | 3.0X10 MFZN2BL | | | 2 | 01 |
| 2 | **VZ958800** | Plate, AC Inlet | | | J | | 07 |
| 2 | **VZ958900** | Panel, AC Inlet | | | N | | 08 |
| 3 | **V0010700** | Circuit Board | PS | | J | | 11 |
| 3 | **V0011100** | Circuit Board | PS | | N | | 12 |
| 4 | **EG330320** | Bind Head Screw | 3.0X12 MFZN2BL | | N | 2 | 01 |
| 5 | **VA211900** | Hexagonal Nut | 3.0 MFZN2Y | | N | 2 | 01 |
| 6 | **VE683000** | Bind Head Tapping Screw-B | 3.0X12 MFZN2Y | | | 3 | 01 |
| 7 | **EP600240** | Bind Head Tapping Screw-B | 4.0X10 MFZN2BL | | | 2 | 01 |
| 8 | **VT461100** | Transistor Holder | | | | | 03 |
| 9 | **XU445A00** | Power Transformer | J/UL/CSA A | | J | | 09 |
| 9 | **XU447A00** | Power Transformer | N IEC65 E | | N | | 09 |

*: New Parts

RANK: Japan only

# ■ KEYBOARD ASSEMBLY

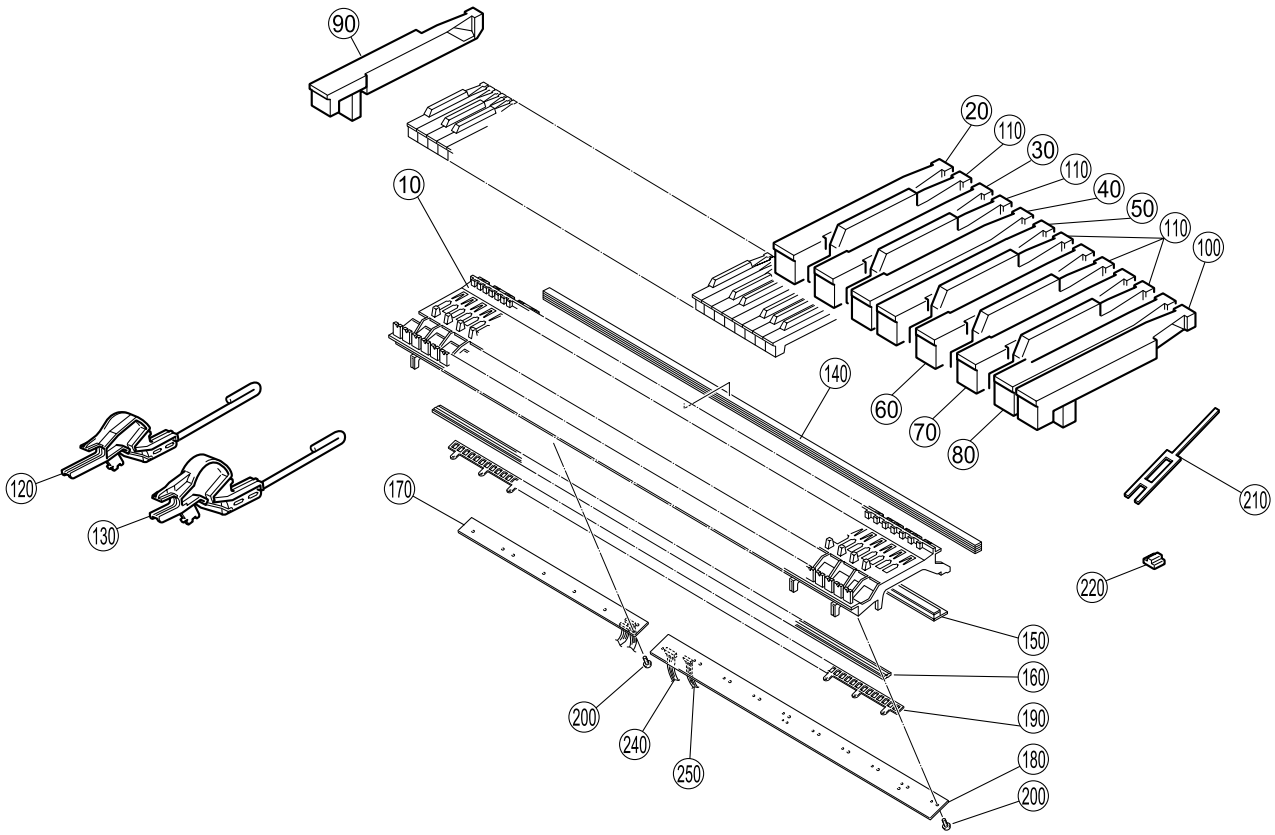


| REF NO. | PART NO. | DESCRIPTION | | | REMARKS | QTY | RANK |
|---|---|---|---|---|---|---|---|
| | | KEYBOARD ASSEMBLY | | | YDP201 | | |
| | **V0042800** | Keyboard Assembly | A88 K6 | | | | 49 |
| 10 | **--** | MK Frame | | | (VU42210) | | |
| 20 | **VU101000** | White Key | C | | | 7 | 05 |
| 30 | **VU101100** | White Key | D | | | 7 | 05 |
| 40 | **VU101200** | White Key | E | | | 7 | 05 |
| 50 | **VU101300** | White Key | F | | | 7 | 05 |
| 60 | **VU101400** | White Key | G | | | 7 | 05 |
| 70 | **VU101500** | White Key | A | | | 7 | 05 |
| 80 | **VU101600** | White Key | B | | | 8 | 05 |
| 90 | **VU101700** | White Key | A' | | | | 05 |
| 100 | **VU101800** | White Key | C' | | | | 05 |
| 110 | **VU102100** | Black Key | | | | 36 | 05 |
| 120 | **VU102500** | Hammer, White Key | | | | 52 | 06 |
| 130 | **VU102900** | Hammer, Black Key | | | | 36 | 06 |
| 140 | **VU342100** | Stopper | | | | | 09 |
| 150 | **VU342200** | Stopper | | | | | 09 |
| 160 | **VY693500** | Rubber Contact | GH A88 2M | | | | 11 |
| 170 | **V2294000** | Circuit Board | HE288L | | | | 12 |
| 180 | **VU342400** | Circuit Board | AEXL88H | | | | 13 |
| 190 | **VU266500** | Insulation Spacer | AEX88 | | | | 06 |
| 200 | **VT413400** | Bind Head Tapping Screw-P | 3.0X10 MFZN2 | | | 17 | 01 |
| 210 | **VZ417900** | Spring R | GH WH/BL | | | 88 | 03 |
| 210 | **V2798500** | Spring R | GH WH/BL | | | 88 | |
| 220 | **VU237500** | Rubber | | | | 88 | 03 |
| 220 | **V2211300** | Rubber 2 | | | | 88 | 03 |
| 230 | **--** | Grease | G-1006Y | | (V627430) | | |
| 240 | **VU341800** | Connector Assembly | 9P BLOCK | | | | 06 |
| 250 | **VU341900** | Connector Assembly | 12P NOTE | | | | 07 |
| 260 | **--** | Dry Grease | FL-78A | | (VU95710) | | |
| 270 | **VV032300** | Protect Wire | | | | | 02 |

*: New Parts

RANK: Japan only

# ■ BENCH

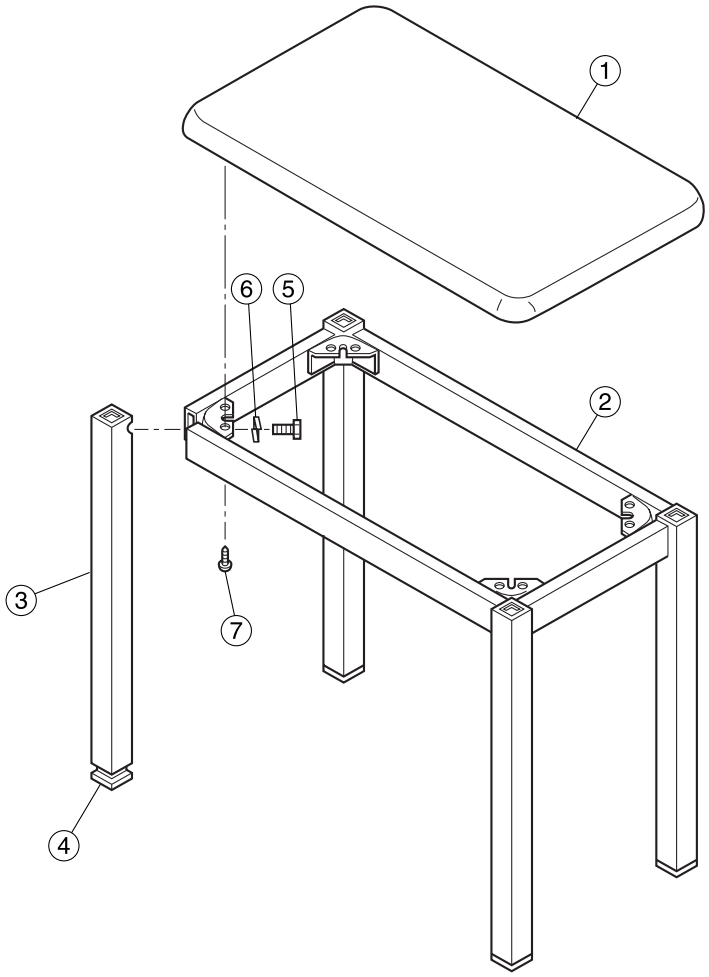


| REF NO. | PART NO. | DESCRIPTION | | | REMARKS | QTY | RANK |
|---|---|---|---|---|---|---|---|
| | | BENCH | | | YDP201 | | |
| | -- | Bench | BC-X | | (VV44340) | | |
| 1 | NX007730 | Bench Board Assembly | | | | | 13 |
| 2 | AX010090 | Bench Frame Assembly | | | | | 15 |
| 3 | AX010100 | Leg Pipe Assembly | | | | 4 | 11 |
| 4 | CX004190 | Leg Cap | | | | 4 | 04 |
| 5 | EX001280 | Hexagonal Bolt | M10P 1.5L 50 MFZN | | | 4 | 03 |
| 6 | EX001290 | Spring Washer | M10 t=2 MFZN2Y | | | 4 | 03 |
| 7 | EX001300 | Bind Head Tapping Screw | M4X15 MFZN2Y | | | | 03 |

*: New Parts

RANK: Japan only

# ■ ELECTRICAL PARTS

| REF NO. | PART NO. | DESCRIPTION | | | REMARKS | QTY | RANK |
|---|---|---|---|---|---|---|---|
| | | ELECTRICAL PARTS | | | YDP201 | | |
| | **VU342400** | Circuit Board | AEXL | | (XR776C0) | | 13 |
| | **V3066400** | Circuit Board | DM | | (XU373C0) | | 20 |
| | **V2294000** | Circuit Board | HE288L | | (XR775C0) | | 12 |
| | **V5115100** | Circuit Board | #2664HP | | (XU684A0,XV858A0) | | 08 |
| | **V4843000** | Circuit Board | M | | (XU380F0) | | 19 |
| | **V2337300** | Circuit Board | PEDAL | | (XR780B0) | | 07 |
| | **VN637600** | Circuit Board | PL (YCJ) | | (XL151B0) | | 03 |
| | **VU659100** | Circuit Board | PL (YMMA) | | (XR898A0) | | 03 |
| | **V4843300** | Circuit Board | PNL | | (XV490B0) | | 08 |
| | **V4843400** | Circuit Board | PNR | | | | 08 |
| | **V0010700** | Circuit Board | PS | J | (XU372D0) | | 11 |
| | **V0011100** | Circuit Board | PS | N | (XU372D0) | | 12 |
| | | | | | | | |
| | **VU342400** | Circuit Board | AEXL | | (XR776C0) | | 13 |
| CN1 | **VB390500** | Connector Base Post | PH- 9P TE | | | | 03 |
| CN2 | **VB390800** | Connector Base Post | PH-12P TE | | | | 01 |
| D1 | **VB941200** | Diode | 1SS133,1SS176 | | | | 01 |
| -108 | **VB941200** | Diode | 1SS133,1SS176 | | | | 01 |
| | **--** | Dust Proof Cloth | | | (VU45980) | | |
| | | | | | | | |
| | **V3066400** | Circuit Board | DM | | (XU373C0) | | 20 |
| C001 | **US061220** | Ceramic Capacitor-CH(chip) | 22P 50V J | | | | 01 |
| C002 | **US061220** | Ceramic Capacitor-CH(chip) | 22P 50V J | | | | 01 |
| C003 | **US064100** | Ceramic Capacitor-B (chip) | 0.0100 50V K | | | | 01 |
| C004 | **US135100** | Ceramic Capacitor-F (chip) | 0.1000 16V Z | | | | 01 |
| C005 | **US135100** | Ceramic Capacitor-F (chip) | 0.1000 16V Z | | | | 01 |
| C006 | **UE037100** | Electrolytic Cap. (chip) | 10 16V RV2 | | | | 01 |
| C007 | **US064100** | Ceramic Capacitor-B (chip) | 0.0100 50V K | | | | 01 |
| C008 | **UE037100** | Electrolytic Cap. (chip) | 10 16V RV2 | | | | 01 |
| C009 | **US064100** | Ceramic Capacitor-B (chip) | 0.0100 50V K | | | | 01 |
| C010 | **US064100** | Ceramic Capacitor-B (chip) | 0.0100 50V K | | | | 01 |
| C011 | **UE037100** | Electrolytic Cap. (chip) | 10 16V RV2 | | | | 01 |
| C012 | **US064100** | Ceramic Capacitor-B (chip) | 0.0100 50V K | | | | 01 |
| C013 | **UE037100** | Electrolytic Cap. (chip) | 10 16V RV2 | | | | 01 |
| C014 | **US064100** | Ceramic Capacitor-B (chip) | 0.0100 50V K | | | | 01 |
| C015 | **UE037100** | Electrolytic Cap. (chip) | 10 16V RV2 | | | | 01 |
| C016 | **US064100** | Ceramic Capacitor-B (chip) | 0.0100 50V K | | | | 01 |
| C017 | **UF017470** | Electrolytic Cap. (chip) | 47 6.3V | | | | 01 |
| C018 | **US064100** | Ceramic Capacitor-B (chip) | 0.0100 50V K | | | | 01 |
| -020 | **US064100** | Ceramic Capacitor-B (chip) | 0.0100 50V K | | | | 01 |
| C021 | **VI055000** | Super Capacitor | 0.100F 5.5V FYD0H | | | | 04 |
| C022 | **US064100** | Ceramic Capacitor-B (chip) | 0.0100 50V K | | | | 01 |
| C023 | **US064100** | Ceramic Capacitor-B (chip) | 0.0100 50V K | | | | 01 |
| C024 | **UE037470** | Electrolytic Cap. (chip) | 47 16V RV2 | | | | 01 |
| C025 | **UE037470** | Electrolytic Cap. (chip) | 47 16V RV2 | | | | 01 |
| C026 | **US062100** | Ceramic Capacitor-SL(chip) | 100P 50V J | | | | 01 |
| C027 | **US062220** | Ceramic Capacitor-SL(chip) | 220P 50V J | | | | 01 |
| C028 | **US135100** | Ceramic Capacitor-F (chip) | 0.1000 16V Z | | | | 01 |
| C101 | **US064100** | Ceramic Capacitor-B (chip) | 0.0100 50V K | | | | 01 |
| C102 | **UE037470** | Electrolytic Cap. (chip) | 47 16V RV2 | | | | 01 |
| -104 | **UE037470** | Electrolytic Cap. (chip) | 47 16V RV2 | | | | 01 |
| C105 | **US064100** | Ceramic Capacitor-B (chip) | 0.0100 50V K | | | | 01 |
| C113 | **UE146470** | Electrolytic Cap.-BP (chip) | 4.7 25V RV2BP | | | | 01 |
| C123 | **UE146470** | Electrolytic Cap.-BP (chip) | 4.7 25V RV2BP | | | | 01 |
| CN001 | **VZ878300** | Receptacle | MDF7 30P BE | | | | 03 |
| CN002 | **VZ878300** | Receptacle | MDF7 30P BE | | | | 03 |
| D001 | **VV925900** | Diode | RLS-73 TE-11 | | | | 01 |
| D002 | **VV925900** | Diode | RLS-73 TE-11 | | | | 01 |
| IC001 | **XU947C00** | IC | HG73C205AFD | | SWX00B | | 09 |
| IC002 | **XV573200** | IC | LHMN5H4H | | MASK ROM | | 09 |
| IC003 | **XU719A00** | IC | HM621664HBLJP-20 | | SRAM 1M | | 11 |
| IC004 | **XP867A00** | IC | UPD63200GS-E1 | | DAC | | 07 |
| IC006 | **XJ598A00** | IC | NJM78L05UA | | REGULATOR +5V | | 02 |
| IC007 | **XS516A00** | IC | UPC2933T-E1 | | REGULATOR +3.3V | | 03 |
| IC008 | **XY119A00** | IC | MM74HCT00SJX | | NAND | | 01 |
| IC008 | **XY120A00** | IC | TC74HCT00AF(EL) | | NAND | | 01 |
| IS002 | **VK863100** | IC Socket | DICF-42CS-E | | | | 03 |
| R001 | **RD355330** | Carbon Resistor (chip) | 330 63M J | | | | 01 |
| R002 | **RD356100** | Carbon Resistor (chip) | 1.0K 63M J | | | | 01 |

*: New Parts

RANK: Japan only

| REF NO. | PART NO. | DESCRIPTION | | | REMARKS | QTY | RANK |
|---|---|---|---|---|---|---|---|
| R003 | RD356100 | Carbon Resistor (chip) | 1.0K 63M J | | | | 01 |
| R004 | RD357100 | Carbon Resistor (chip) | 10K 63M J | | | | 01 |
| -006 | RD357100 | Carbon Resistor (chip) | 10K 63M J | | | | 01 |
| R007 | RD357470 | Carbon Resistor (chip) | 47K 63M J | | | | 01 |
| R008 | RD355100 | Carbon Resistor (chip) | 100 63M J | | | | 01 |
| R009 | RD355100 | Carbon Resistor (chip) | 100 63M J | | | | 01 |
| R010 | RD356150 | Carbon Resistor (chip) | 1.5K 63M J | | | | 01 |
| R011 | RD354470 | Carbon Resistor (chip) | 47 63M J | | | | 01 |
| R012 | RD354470 | Carbon Resistor (chip) | 47 63M J | | | | 01 |
| R013 | RD357470 | Carbon Resistor (chip) | 47K 63M J | | | | 01 |
| R014 | RD357470 | Carbon Resistor (chip) | 47K 63M J | | | | 01 |
| R015 | RD354470 | Carbon Resistor (chip) | 47 63M J | | | | 01 |
| -020 | RD354470 | Carbon Resistor (chip) | 47 63M J | | | | 01 |
| R021 | RD357470 | Carbon Resistor (chip) | 47K 63M J | | | | 01 |
| R022 | RD357100 | Carbon Resistor (chip) | 10K 63M J | | | | 01 |
| -028 | RD357100 | Carbon Resistor (chip) | 10K 63M J | | | | 01 |
| R029 | RD357470 | Carbon Resistor (chip) | 47K 63M J | | | | 01 |
| R030 | RD357470 | Carbon Resistor (chip) | 47K 63M J | | | | 01 |
| R031 | RD354470 | Carbon Resistor (chip) | 47 63M J | | | | 01 |
| R032 | RD355470 | Carbon Resistor (chip) | 470 63M J | | | | 01 |
| R033 | RD354470 | Carbon Resistor (chip) | 47 63M J | | | | 01 |
| R036 | RD355100 | Carbon Resistor (chip) | 100 63M J | | | | 01 |
| R040 | RD350000 | Carbon Resistor (chip) | 0 63M J | | | | 01 |
| R042 | RD350000 | Carbon Resistor (chip) | 0 63M J | | | | 01 |
| R113 | RD350000 | Carbon Resistor (chip) | 0 63M J | | | | 01 |
| R123 | RD350000 | Carbon Resistor (chip) | 0 63M J | | | | 01 |
| X001 | VZ703600 | Quartz Crystal Unit | 8.4672M SMD-49 | | | | 03 |
| ZD001 | VU172000 | Zener Diode | UDZS5.6BTE-17 5.6V | | | | 01 |
| | | | | | | | |
| | V2294000 | Circuit Board | HE288L | | (XR775C0) | | 12 |
| | -- | Dust Proof Cloth | | | (VU45960) | | |
| C1 | FG644100 | Electrolytic Cap. | 0.0100 50V Z | | | | 01 |
| -3 | FG644100 | Electrolytic Cap. | 0.0100 50V Z | | | | 01 |
| C5 | VF760000 | Electrolytic Cap. | 100.00 10.0V | | | | 01 |
| CL1 | VI653000 | Ceramic Resonator | CST4.00MGW040 | | | | 01 |
| CN1 | VB390400 | Connector Base Post | PH- 8P TE | | | | 01 |
| CN2 | VB390500 | Connector Base Post | PH- 9P TE | | | | 03 |
| CN3 | VB390800 | Connector Base Post | PH-12P TE | | | | 01 |
| D1 | VB941200 | Diode | 1SS133,1SS176 | | | | 01 |
| D2 | VB941200 | Diode | 1SS133,1SS176 | | | | 01 |
| D5 | VB941200 | Diode | 1SS133,1SS176 | | | | 01 |
| -72 | VB941200 | Diode | 1SS133,1SS176 | | | | 01 |
| IC1 | XR632A00 | IC | YMZ702-D | | KSN2 | | 09 |
| J1 | -- | Jumper Wire | 0.55 | | (VD04170) | | |
| J2 | -- | Jumper Wire | 0.55 | | (VD04170) | | |
| R1 | HF759100 | Carbon Resistor | 1.0M 1/4 J | | | | 01 |
| R2 | HF755100 | Carbon Resistor | 100.0 1/4 J | | | | 01 |
| R3 | HF755100 | Carbon Resistor | 100.0 1/4 J | | | | 01 |
| R4 | HF756100 | Carbon Resistor | 1.0K 1/4 J | | | | 01 |
| RA1 | VU483500 | Resistor Array | RGLD12X103J | | | | 01 |
| | | | | | | | |
| | V5115100 | Circuit Board | HP | | (XU684A0,XV858A0) | | 08 |
| | VT890700 | Earth Wire | CVP59,69 | | | | 01 |
| CN001 | LB919070 | Base Post Connector | XH 7P SE | | | | 01 |
| CN002 | VB858100 | Connector Base Post | PH- 2P SE | | | | 01 |
| C0001 | FG413330 | Ceramic Capacitor-B | 3300P 50V K | | | | 01 |
| -0005 | FG413330 | Ceramic Capacitor-B | 3300P 50V K | | | | 01 |
| C0006 | UN847220 | Electrolytic Cap.-BP | 22.00 25.0V | | | | 01 |
| C0007 | UN847220 | Electrolytic Cap.-BP | 22.00 25.0V | | | | 01 |
| FL001 | VB971100 | Coil | FL5R200QN | | | | 01 |
| FL002 | VB971100 | Coil | FL5R200QN | | | | 01 |
| FL003 | GE300670 | Ferrite Bead | BL02RN2-R62T4 | | | | 02 |
| FL003 | VB871100 | Ferrite Bead | BL02RN2-R62 | | | | 01 |
| FL004 | VB971100 | Coil | FL5R200QN | | | | 01 |
| FL005 | VB971100 | Coil | FL5R200QN | | | | 01 |
| FL006 | GE300670 | Ferrite Bead | BL02RN2-R62T4 | | | | 02 |
| FL006 | VB871100 | Ferrite Bead | BL02RN2-R62 | | | | 01 |
| HP001 | LB101870 | Phone Jack | JACK YKB21-5006 | | | | 03 |
| HP002 | LB101870 | Phone Jack | JACK YKB21-5006 | | | | 03 |
| R0001 | HF455120 | Carbon Resistor | 120.0 1/4 J | | | | 01 |

*: New Parts

RANK: Japan only

| REF NO. | PART NO. | DESCRIPTION | | | REMARKS | QTY | RANK |
|---|---|---|---|---|---|---|---|
| -0004 | HF455120 | Carbon Resistor | 120.0 1/4 J | | | | 01 |
| R0001 | HF755120 | Carbon Resistor | 120.0 1/4 J | | | | 01 |
| -0004 | HF755120 | Carbon Resistor | 120.0 1/4 J | | | | 01 |
| R0005 | HF455390 | Carbon Resistor | 390.0 1/4 J | | | | 01 |
| R0005 | HF755390 | Carbon Resistor | 390.0 1/4 J | | | | 01 |
| R0006 | HF455390 | Carbon Resistor | 390.0 1/4 J | | | | 01 |
| R0006 | HF755390 | Carbon Resistor | 390.0 1/4 J | | | | 01 |
| | | | | | | | |
| | V4843000 | Circuit Board | M | | (XU380F0) | | 19 |
| | VI249300 | Support, PCB | KGLS-4S | | | | 01 |
| | EP600220 | Bind Head Tapping Screw-B | 3.0X10 MFZN2Y | | | | 01 |
| | VT461100 | Transistor Holder | | | | | 03 |
| | V2308300 | Heat Sink | | | | | 04 |
| | -- | Jumper Wire | 0.55 | | (VD04170) | | |
| J1 | -- | Jumper Wire | 0.55 | | (VD04170) | | |
| J2 | -- | Jumper Wire | 0.55 | | (VD04170) | | |
| C001 | UR837100 | Electrolytic Cap. | 10.00 16.0V | | | | 01 |
| C010 | FG644100 | Electrolytic Cap. | 0.0100 50V Z | | | | 01 |
| C020 | FG644100 | Electrolytic Cap. | 0.0100 50V Z | | | | 01 |
| C021 | FG644100 | Electrolytic Cap. | 0.0100 50V Z | | | | 01 |
| C051 | FG644100 | Electrolytic Cap. | 0.0100 50V Z | | | | 01 |
| C061 | FG644100 | Electrolytic Cap. | 0.0100 50V Z | | | | 01 |
| C062 | FG644100 | Electrolytic Cap. | 0.0100 50V Z | | | | 01 |
| C063 | UR848100 | Electrolytic Cap. | 100.00 25.0V | | | | 01 |
| C064 | UR848100 | Electrolytic Cap. | 100.00 25.0V | | | | 01 |
| C071 | UR848220 | Electrolytic Cap. | 220.00 25.0V | | | | 01 |
| C072 | UR828470 | Electrolytic Cap. | 470.00 10.0V | | | | 01 |
| C073 | FG644100 | Electrolytic Cap. | 0.0100 50V Z | | | | 01 |
| C074 | FG644100 | Electrolytic Cap. | 0.0100 50V Z | | | | 01 |
| C100 | UR848220 | Electrolytic Cap. | 220.00 25.0V | | | | 01 |
| C102 | FG612180 | Ceramic Cap.-B | 180P 50V K | | | | |
| C104 | UN846470 | Electrolytic Cap.-BP | 4.70 25.0V | | | | 01 |
| C105 | VC694800 | Semiconductive Cera. Cap. | 0.1000 25V Z | | | | 01 |
| C110 | FG644100 | Electrolytic Cap. | 0.0100 50V Z | | | | 01 |
| C111 | VE327200 | Monolithic Mylar Capacitor | 1.0 50V J | | | | 02 |
| C111 | VU838100 | Monolithic Mylar Capacitor | 1.0000 50V J | | | | |
| C112 | VE326400 | Monolithic Mylar Capacitor | 0.22 50V J | | | | 01 |
| C112 | VR168700 | Monolithic Mylar Capacitor | ECQ-V1H224JL3 | | | | 01 |
| C113 | VE326300 | Monolithic Mylar Capacitor | 0.18 50V J | | | | 01 |
| C113 | VR168600 | Monolithic Mylar Capacitor | ECQ-V1H184JL3 | | | | 01 |
| C114 | UA354470 | Mylar Capacitor | 0.0470 50V J | | | | |
| C115 | UA354270 | Mylar Capacitor | 0.0270 50V J | | | | 01 |
| C121 | UA354820 | Mylar Capacitor | 0.0820 50V J | | | | 01 |
| C122 | UA354680 | Mylar Capacitor | 0.0680 50V J | | | | 01 |
| C123 | UA354330 | Mylar Capacitor | 0.0330 50V J | | | | 01 |
| C124 | UA354180 | Mylar Capacitor | 0.0180 50V J | | | | 01 |
| C125 | UA353390 | Mylar Capacitor | 3900P 50V J | | | | 01 |
| C131 | UR837470 | Electrolytic Cap. | 47.00 16.0V | | | | 01 |
| C132 | FG613150 | Ceramic Capacitor-B | 1500P 50V K | | | | 01 |
| C133 | UR866220 | Electrolytic Cap. | 2.20 50.0V | | | | 01 |
| C134 | FG613100 | Ceramic Capacitor-B | 1000P 50V K | | | | 01 |
| C135 | UR837220 | Electrolytic Cap. | 22.00 16.0V | | | | 01 |
| C136 | UR838220 | Electrolytic Cap. | 220.00 16.0V | | | | 01 |
| C137 | UR846470 | Electrolytic Cap. | 4.70 25.0V | | | | 01 |
| C141 | VC694800 | Semiconductive Cera. Cap. | 0.1000 25V Z | | | | 01 |
| -144 | VC694800 | Semiconductive Cera. Cap. | 0.1000 25V Z | | | | 01 |
| C150 | FG644100 | Electrolytic Cap. | 0.0100 50V Z | | | | 01 |
| C151 | UR828470 | Electrolytic Cap. | 470.00 10.0V | | | | 01 |
| C202 | FG612180 | Ceramic Cap.-B | 180P 50V K | | | | |
| C204 | UN846470 | Electrolytic Cap.-BP | 4.70 25.0V | | | | 01 |
| C210 | FG644100 | Electrolytic Cap. | 0.0100 50V Z | | | | 01 |
| C211 | VE327200 | Monolithic Mylar Capacitor | 1.0 50V J | | | | 02 |
| C211 | VU838100 | Monolithic Mylar Capacitor | 1.0000 50V J | | | | |
| C212 | VE326400 | Monolithic Mylar Capacitor | 0.22 50V J | | | | 01 |
| C212 | VR168700 | Monolithic Mylar Capacitor | ECQ-V1H224JL3 | | | | 01 |
| C213 | VE326300 | Monolithic Mylar Capacitor | 0.18 50V J | | | | 01 |
| C213 | VR168600 | Monolithic Mylar Capacitor | ECQ-V1H184JL3 | | | | 01 |
| C214 | UA354470 | Mylar Capacitor | 0.0470 50V J | | | | |
| C215 | UA354270 | Mylar Capacitor | 0.0270 50V J | | | | 01 |
| C221 | UA354820 | Mylar Capacitor | 0.0820 50V J | | | | 01 |

*: New Parts

RANK: Japan only

| REF NO. | PART NO. | DESCRIPTION | | | REMARKS | QTY | RANK |
|---|---|---|---|---|---|---|---|
| C222 | UA354680 | Mylar Capacitor | 0.0680 50V J | | | | 01 |
| C223 | UA354330 | Mylar Capacitor | 0.0330 50V J | | | | 01 |
| C224 | UA354180 | Mylar Capacitor | 0.0180 50V J | | | | 01 |
| C225 | UA353390 | Mylar Capacitor | 3900P 50V J | | | | 01 |
| C231 | UR837470 | Electrolytic Cap. | 47.00 16.0V | | | | 01 |
| C232 | FG613150 | Ceramic Capacitor-B | 1500P 50V K | | | | 01 |
| C233 | UR866220 | Electrolytic Cap. | 2.20 50.0V | | | | 01 |
| C234 | FG613100 | Ceramic Capacitor-B | 1000P 50V K | | | | 01 |
| C235 | UR837220 | Electrolytic Cap. | 22.00 16.0V | | | | 01 |
| C237 | UR846470 | Electrolytic Cap. | 4.70 25.0V | | | | 01 |
| C241 | VC694800 | Semiconductive Cera. Cap. | 0.1000 25V Z | | | | 01 |
| -244 | VC694800 | Semiconductive Cera. Cap. | 0.1000 25V Z | | | | 01 |
| C503 | UR846470 | Electrolytic Cap. | 4.70 25.0V | | | | 01 |
| C513 | UR846470 | Electrolytic Cap. | 4.70 25.0V | | | | 01 |
| C570 | FG644100 | Electrolytic Cap. | 0.0100 50V Z | | | | 01 |
| C571 | FG652100 | Ceramic Capacitor-SL | 100P 50V J | | | | 01 |
| C580 | FG644100 | Electrolytic Cap. | 0.0100 50V Z | | | | 01 |
| CA041 | VK994900 | Ceramic Capacitor Array | 100P 50V M | | | | 01 |
| CA051 | VK994900 | Ceramic Capacitor Array | 100P 50V M | | | | 01 |
| CA571 | VK994900 | Ceramic Capacitor Array | 100P 50V M | | | | 01 |
| CA572 | VH484100 | Ceramic Capacitor Array | 100P 50V M | | | | 02 |
| CA581 | VH484100 | Ceramic Capacitor Array | 100P 50V M | | | | 02 |
| CN001 | V2337100 | Pin Header | RF 30P TE | | | | 04 |
| CN001 | V2337200 | Pin Header | 9022 30P TE | | | | 04 |
| CN002 | V2337100 | Pin Header | RF 30P TE | | | | 04 |
| CN002 | V2337200 | Pin Header | 9022 30P TE | | | | 04 |
| CN050 | VB390400 | Connector Base Post | PH- 8P TE | | | | 01 |
| CN060 | LB918050 | Base Post Connector | XH 5P TE | | | | 01 |
| CN080 | LB918070 | Base Post Connector | XH 7P TE | | | | 01 |
| CN090 | LB932040 | Base Post Connector | VH- 4P TE | | | | 01 |
| CN100 | VB390400 | Connector Base Post | PH- 8P TE | | | | 01 |
| CN570 | VB390800 | Connector Base Post | PH-12P TE | | | | 01 |
| CN580 | VB390400 | Connector Base Post | PH- 8P TE | | | | 01 |
| D001 | VB941200 | Diode | 1SS133,1SS176 | | | | 01 |
| D021 | VB941200 | Diode | 1SS133,1SS176 | | | | 01 |
| D081 | VB481900 | Diode | 11ES4 | | | | 01 |
| D501 | VB481900 | Diode | 11ES4 | | | | 01 |
| IC010 | IR013200 | IC | TC74HC132AP | | NAND | | 03 |
| IC010 | IR013250 | IC | SN74HC132N | | NAND | | 03 |
| IC020 | VD473200 | Photo Coupler | 6N137 | | | | 05 |
| IC060 | XU387A00 | IC | UPC24M12AHF | | REGULATOR +12V | | 03 |
| IC070 | XR925A00 | IC | SI-8401L | | REGULATOR +5V 0.5A | | 05 |
| IC100 | XU131A00 | IC | TA8233H | | POWER AMP 30WX2 BTL | | 06 |
| IC110 | XF751A00 | IC | M5227P | | EQUALIZER | | 04 |
| IC150 | XB247A00 | IC | UPC4570HA | | OP AMP | | 02 |
| IC210 | XF751A00 | IC | M5227P | | EQUALIZER | | 04 |
| JK020 | VT202500 | DIN Connector | JACK 5P YKF51-50 | | | | 01 |
| JK030 | VT202500 | DIN Connector | JACK 5P YKF51-50 | | | | 01 |
| JK040 | VZ743800 | DIN Connector | DIN JACK6P MD-S610 | | | | 02 |
| JK502 | VS115400 | Phone Jack | JACK LGR4609-7000 | | | | 01 |
| JK512 | VS115400 | Phone Jack | JACK LGR4609-7000 | | | | 01 |
| L021 | VB835000 | Coil | FL5R200QNT | | | | 01 |
| L021 | V2993400 | Coil | R-5C.20U | | | | 01 |
| L022 | VB835000 | Coil | FL5R200QNT | | | | 01 |
| L022 | V2993400 | Coil | R-5C.20U | | | | 01 |
| L031 | VB835000 | Coil | FL5R200QNT | | | | 01 |
| L031 | V2993400 | Coil | R-5C.20U | | | | 01 |
| L032 | VB835000 | Coil | FL5R200QNT | | | | 01 |
| L032 | V2993400 | Coil | R-5C.20U | | | | 01 |
| L033 | GE300670 | Ferrite Bead | BL02RN2-R62T4 | | | | 02 |
| L033 | V2635200 | Ferrite Bead | RH03506BT-B | | | | |
| L041 | VB835000 | Coil | FL5R200QNT | | | | 01 |
| -044 | VB835000 | Coil | FL5R200QNT | | | | 01 |
| L041 | V2993400 | Coil | R-5C.20U | | | | 01 |
| -044 | V2993400 | Coil | R-5C.20U | | | | 01 |
| L502 | V3085000 | Coil | R-5C.10U | | | | |
| L503 | V3085000 | Coil | R-5C.10U | | | | |
| L512 | V3085000 | Coil | R-5C.10U | | | | |
| L513 | V3085000 | Coil | R-5C.10U | | | | |
| R001 | HF758470 | Carbon Resistor | 470.0K 1/4 J | | | | 01 |

*: New Parts

RANK: Japan only

| REF NO. | PART NO. | DESCRIPTION | | | REMARKS | QTY | RANK |
|---|---|---|---|---|---|---|---|
| R002 | HF757220 | Carbon Resistor | 22.0K 1/4 J | | | | 01 |
| R003 | HF756100 | Carbon Resistor | 1.0K 1/4 J | | | | 01 |
| R004 | HF757100 | Carbon Resistor | 10.0K 1/4 J | | | | 01 |
| R005 | HF757100 | Carbon Resistor | 10.0K 1/4 J | | | | 01 |
| R006 | HF758470 | Carbon Resistor | 470.0K 1/4 J | | | | 01 |
| R007 | HF757220 | Carbon Resistor | 22.0K 1/4 J | | | | 01 |
| R008 | HF757100 | Carbon Resistor | 10.0K 1/4 J | | | | 01 |
| R009 | HF756270 | Carbon Resistor | 2.7K 1/4 J | | | | 01 |
| R010 | HF755220 | Carbon Resistor | 220.0 1/4 J | | | | 01 |
| R011 | HF755100 | Carbon Resistor | 100.0 1/4 J | | | | 01 |
| R012 | HF755100 | Carbon Resistor | 100.0 1/4 J | | | | 01 |
| R021 | HF756100 | Carbon Resistor | 1.0K 1/4 J | | | | 01 |
| R022 | HF755220 | Carbon Resistor | 220.0 1/4 J | | | | 01 |
| R031 | HF757100 | Carbon Resistor | 10.0K 1/4 J | | | | 01 |
| R032 | HF757220 | Carbon Resistor | 22.0K 1/4 J | | | | 01 |
| R033 | HF757220 | Carbon Resistor | 22.0K 1/4 J | | | | 01 |
| R034 | HF756150 | Carbon Resistor | 1.5K 1/4 J | | | | 01 |
| R035 | HF755220 | Carbon Resistor | 220.0 1/4 J | | | | 01 |
| R036 | HF755220 | Carbon Resistor | 220.0 1/4 J | | | | 01 |
| R051 | HF755100 | Carbon Resistor | 100.0 1/4 J | | | | 01 |
| -054 | HF755100 | Carbon Resistor | 100.0 1/4 J | | | | 01 |
| R081 | HF756470 | Carbon Resistor | 4.7K 1/4 J | | | | 01 |
| R082 | HF756560 | Carbon Resistor | 5.6K 1/4 J | | | | 01 |
| R083 | HF756560 | Carbon Resistor | 5.6K 1/4 J | | | | 01 |
| R091 | HF757100 | Carbon Resistor | 10.0K 1/4 J | | | | 01 |
| R092 | HF756470 | Carbon Resistor | 4.7K 1/4 J | | | | 01 |
| R093 | HF757100 | Carbon Resistor | 10.0K 1/4 J | | | | 01 |
| R094 | HF757100 | Carbon Resistor | 10.0K 1/4 J | | | | 01 |
| R101 | HF756680 | Carbon Resistor | 6.8K 1/4 J | | | | 01 |
| R102 | HF757330 | Carbon Resistor | 33.0K 1/4 J | | | | 01 |
| R104 | HF756470 | Carbon Resistor | 4.7K 1/4 J | | | | 01 |
| R111 | HF757150 | Carbon Resistor | 15.0K 1/4 J | | | | 01 |
| R112 | HF755680 | Carbon Resistor | 680.0 1/4 J | | | | 01 |
| R113 | HF755820 | Carbon Resistor | 820.0 1/4 J | | | | 01 |
| R114 | HF756150 | Carbon Resistor | 1.5K 1/4 J | | | | 01 |
| R115 | HF756390 | Carbon Resistor | 3.9K 1/4 J | | | | 01 |
| R121 | HF756470 | Carbon Resistor | 4.7K 1/4 J | | | | 01 |
| R122 | HF757220 | Carbon Resistor | 22.0K 1/4 J | | | | 01 |
| R123 | HF757180 | Carbon Resistor | 18.0K 1/4 J | | | | 01 |
| -125 | HF757180 | Carbon Resistor | 18.0K 1/4 J | | | | 01 |
| R131 | HF756330 | Carbon Resistor | 3.3K 1/4 J | | | | 01 |
| R132 | HF757120 | Carbon Resistor | 12.0K 1/4 J | | | | 01 |
| R133 | HF756100 | Carbon Resistor | 1.0K 1/4 J | | | | 01 |
| R134 | HF755150 | Carbon Resistor | 150.0 1/4 J | | | | 01 |
| R141 | HF753220 | Carbon Resistor | 2.2 1/4 J | | | | 01 |
| R142 | HF753220 | Carbon Resistor | 2.2 1/4 J | | | | 01 |
| R151 | HF755560 | Carbon Resistor | 560.0 1/4 J | | | | 01 |
| R152 | HF755560 | Carbon Resistor | 560.0 1/4 J | | | | 01 |
| R201 | HF756680 | Carbon Resistor | 6.8K 1/4 J | | | | 01 |
| R202 | HF757330 | Carbon Resistor | 33.0K 1/4 J | | | | 01 |
| R204 | HF756470 | Carbon Resistor | 4.7K 1/4 J | | | | 01 |
| R211 | HF757150 | Carbon Resistor | 15.0K 1/4 J | | | | 01 |
| R212 | HF755680 | Carbon Resistor | 680.0 1/4 J | | | | 01 |
| R213 | HF755820 | Carbon Resistor | 820.0 1/4 J | | | | 01 |
| R214 | HF756150 | Carbon Resistor | 1.5K 1/4 J | | | | 01 |
| R215 | HF756390 | Carbon Resistor | 3.9K 1/4 J | | | | 01 |
| R221 | HF756470 | Carbon Resistor | 4.7K 1/4 J | | | | 01 |
| R222 | HF757220 | Carbon Resistor | 22.0K 1/4 J | | | | 01 |
| R223 | HF757180 | Carbon Resistor | 18.0K 1/4 J | | | | 01 |
| -225 | HF757180 | Carbon Resistor | 18.0K 1/4 J | | | | 01 |
| R231 | HF756330 | Carbon Resistor | 3.3K 1/4 J | | | | 01 |
| R232 | HF757120 | Carbon Resistor | 12.0K 1/4 J | | | | 01 |
| R233 | HF756100 | Carbon Resistor | 1.0K 1/4 J | | | | 01 |
| R234 | HF755150 | Carbon Resistor | 150.0 1/4 J | | | | 01 |
| R241 | HF753220 | Carbon Resistor | 2.2 1/4 J | | | | 01 |
| R242 | HF753220 | Carbon Resistor | 2.2 1/4 J | | | | 01 |
| R504 | HF755680 | Carbon Resistor | 680.0 1/4 J | | | | 01 |
| R506 | HF757100 | Carbon Resistor | 10.0K 1/4 J | | | | 01 |
| R514 | HF755680 | Carbon Resistor | 680.0 1/4 J | | | | 01 |
| R516 | HF757100 | Carbon Resistor | 10.0K 1/4 J | | | | 01 |

*: New Parts

RANK: Japan only

| REF NO. | PART NO. | DESCRIPTION | | | REMARKS | QTY | RANK |
|---|---|---|---|---|---|---|---|
| R581 | HF754470 | Carbon Resistor | 47.0 1/4 J | | | | 01 |
| R582 | HF754470 | Carbon Resistor | 47.0 1/4 J | | | | 01 |
| R583 | HF755100 | Carbon Resistor | 100.0 1/4 J | | | | 01 |
| -588 | HF755100 | Carbon Resistor | 100.0 1/4 J | | | | 01 |
| R601 | VD041700 | Jumper Wire | 0.55 | | | | |
| R602 | VD041700 | Jumper Wire | 0.55 | | | | |
| R605 | VD041700 | Jumper Wire | 0.55 | | | | |
| R606 | VD041700 | Jumper Wire | 0.55 | | | | |
| RY081 | VK881200 | Relay | DC G5Z-2A-YA | | | | 04 |
| RY501 | KC001900 | Relay | DC RY12W | | | | 07 |
| TA570 | VH885000 | Transistor Array | TD62785P SOURCE | | | | 04 |
| TA580 | IG136700 | Transistor Array | TD62083AP | | | | 05 |
| TA580 | V4341100 | Transistor Array | TD62083CP | | | | 04 |
| TR001 | IC174070 | Transistor | 2SC1740S R,S | | | | 01 |
| TR002 | IA101590 | Transistor | 2SA1015 O,Y | | | | 01 |
| TR031 | IC174070 | Transistor | 2SC1740S R,S | | | | 01 |
| TR032 | IC174070 | Transistor | 2SC1740S R,S | | | | 01 |
| TR091 | IC174070 | Transistor | 2SC1740S R,S | | | | 01 |
| | | | | | | | |
| | V2337300 | Circuit Board | PEDAL | | (XR780B0) | | 07 |
| | VD041700 | Jumper Wire | 0.55 | | | | |
| | -- | GND Wire | L=30 | | (VZ01760) | | |
| CN3 | VB390200 | Connector Base Post | PH- 6P TE | | | | 01 |
| | | | | | | | |
| | VN637600 | Circuit Board | PL (YCJ) | | (XL151B0) | | 03 |
| CN1 | VB858100 | Connector Base Post | PH- 2P SE | | | | 01 |
| LED1 | VD180000 | LED | SLZ-190B-03 RE | | power | | 01 |
| | | | | | | | |
| | VU659100 | Circuit Board | PL (YMMA) | | (XR898A0) | | 03 |
| CN1 | VB858100 | Connector Base Post | PH- 2P SE | | | | 01 |
| LED1 | VD180000 | LED | SLZ-190B-03 RE | | power | | 01 |
| | | | | | | | |
| | V4843300 | Circuit Board | PNL | | (XV490B0) | | 08 |
| | V4843400 | Circuit Board | PNR | | | | 08 |
| | V2296000 | Spacer | B | | | | 03 |
| | -- | Jumper Wire | 0.55 | | (VD04170) | | |
| CN001 | VB858700 | Connector Base Post | PH- 8P SE | | | | 01 |
| CN002 | VB858700 | Connector Base Post | PH- 8P SE | | | | 01 |
| CN003 | VC166500 | Connector Base Post | PH-12P SE | | | | 01 |
| CN004 | VB858700 | Connector Base Post | PH- 8P SE | | | | 01 |
| CN005 | VC166500 | Connector Base Post | PH-12P SE | | | | 01 |
| D0001 | VB941200 | Diode | 1SS133,1SS176 | | | | 01 |
| -0021 | VB941200 | Diode | 1SS133,1SS176 | | | | 01 |
| LD001 | VS150300 | LED | SEL4214S TP5 RE | | TRANSPOSE | | 01 |
| LD002 | VD180000 | LED | SLZ-190B-03 RE | | ROOM | | 01 |
| LD003 | VD180000 | LED | SLZ-190B-03 RE | | HALL 1 | | 01 |
| LD004 | VD180000 | LED | SLZ-190B-03 RE | | HALL 2 | | 01 |
| LD005 | VD180000 | LED | SLZ-190B-03 RE | | STAGE | | 01 |
| LD006 | VD180000 | LED | SLZ-190B-03 RE | | HARD | | 01 |
| LD007 | VD180000 | LED | SLZ-190B-03 RE | | MEDIUM | | 01 |
| LD008 | VD180000 | LED | SLZ-190B-03 RE | | SOFT | | 01 |
| LD009 | VS150300 | LED | SEL4214S TP5 RE | | GRAND PIANO | | 01 |
| LD010 | VS150300 | LED | SEL4214S TP5 RE | | E.PIANO | | 01 |
| LD011 | VS150300 | LED | SEL4214S TP5 RE | | HARPSICHORD | | 01 |
| LD012 | VS150300 | LED | SEL4214S TP5 RE | | STRINGS | | 01 |
| LD013 | VS150300 | LED | SEL4214S TP5 RE | | PIPE ORGAN | | 01 |
| LD014 | VS150300 | LED | SEL4214S TP5 RE | | VARIATION | | 01 |
| LD015 | VS150300 | LED | SEL4214S TP5 RE | | FUNCTION | | 01 |
| LD016 | VS150300 | LED | SEL4214S TP5 RE | | SONG | | 01 |
| LD017 | VS150500 | LED | SML12460C TP4RE/GR | | TRACK1 | | 01 |
| LD018 | VS150500 | LED | SML12460C TP4RE/GR | | TRACK2 | | 01 |
| LD019 | VN135500 | LED Display | LB-303VA | | display | | 06 |
| R0001 | HF754470 | Carbon Resistor | 47.0 1/4 J | | | | 01 |
| -0007 | HF754470 | Carbon Resistor | 47.0 1/4 J | | | | 01 |
| R0010 | VD041700 | Jumper Wire | 0.55 | | | | |
| R0012 | VD041700 | Jumper Wire | 0.55 | | | | |
| R0020 | VD041700 | Jumper Wire | 0.55 | | | | |
| R0022 | VD041700 | Jumper Wire | 0.55 | | | | |
| SW001 | VY759800 | Tact Switch | SKQNAB | | DEMO | | 01 |
| SW002 | VY759800 | Tact Switch | SKQNAB | | TRANSPOSE | | 01 |

*: New Parts

RANK: Japan only

| REF NO. | PART NO. | DESCRIPTION | | | REMARKS | | QTY | RANK |
|---|---|---|---|---|---|---|---|---|
| SW003 | VY759800 | Tact Switch | SKQNAB | | REVERB | | | 01 |
| SW004 | VY759800 | Tact Switch | SKQNAB | | TOUCH | | | 01 |
| SW005 | VY759800 | Tact Switch | SKQNAB | | GRAND PIANO | | | 01 |
| SW006 | VY759800 | Tact Switch | SKQNAB | | E.PIANO | | | 01 |
| SW007 | VY759800 | Tact Switch | SKQNAB | | HARPSICHORD | | | 01 |
| SW008 | VY759800 | Tact Switch | SKQNAB | | STRINGS | | | 01 |
| SW009 | VY759800 | Tact Switch | SKQNAB | | PIPE ORGAN | | | 01 |
| SW010 | VY759800 | Tact Switch | SKQNAB | | VARIATION | | | 01 |
| SW011 | VY759800 | Tact Switch | SKQNAB | | METRONOME | | | 01 |
| SW012 | VY759800 | Tact Switch | SKQNAB | | TEMPO DOWN | | | 01 |
| SW013 | VY759800 | Tact Switch | SKQNAB | | TEMPO UP | | | 01 |
| SW014 | VY759800 | Tact Switch | SKQNAB | | FUNCTION | | | 01 |
| SW015 | VY759800 | Tact Switch | SKQNAB | | SONG | | | 01 |
| SW016 | VY759800 | Tact Switch | SKQNAB | | -/NO | | | 01 |
| SW017 | VY759800 | Tact Switch | SKQNAB | | +/YES | | | 01 |
| SW018 | VY759800 | Tact Switch | SKQNAB | | START/STOP | | | 01 |
| SW019 | VY759800 | Tact Switch | SKQNAB | | REC | | | 01 |
| SW020 | VY759800 | Tact Switch | SKQNAB | | TRACK1 | | | 01 |
| SW021 | VY759800 | Tact Switch | SKQNAB | | TRACK2 | | | 01 |
| VR001 | V4007500 | Slide Variable Resistor | 1B10K RS30112A9A02 | | MASTER VOLUME | | | 03 |
| | | | | | | | | |
| | V0010700 | Circuit Board | PS | | J | (XU372D0) | | 11 |
| | V0011100 | Circuit Board | PS | | N | (XU372D0) | | 12 |
| | VT308100 | AC Inlet | CCT9302-0101M | | | | | 02 |
| | LB201530 | Fuse Holder | PC-PH1 | | J | | | 01 |
| | -- | Jumper Wire | 0.55 | | | (VD04170) | | |
| | VT139600 | Voltage Selector | M1684-E | | N | | | 04 |
| | LB201530 | Fuse Holder | PC-PH1 | | N | | | 01 |
| C1 | FI383470 | Capacitor | 4700P 400V U.C.S.V | | | | | 01 |
| C1 | VY675100 | Capacitor | 4700P 250V J.U.C.S | | | | | 01 |
| C2 | FI383470 | Capacitor | 4700P 400V U.C.S.V | | | | | 01 |
| C2 | VY675100 | Capacitor | 4700P 250V J.U.C.S | | | | | 01 |
| C3 | VT575200 | Capacitor | 0.01 400V J.U.C.S | | | | | 01 |
| C3 | VY675000 | Capacitor | 0.010 250V J.U.C.S | | | | | 01 |
| C4 | UA654470 | Mylar Capacitor | 0.0470 50V J | | | | | 01 |
| C5 | V2126200 | Electrolytic Cap. | 10000 25.0V | | | | | 04 |
| C6 | UR866330 | Electrolytic Cap. | 3.30 50.0V | | J | | | 01 |
| C6 | UJ866330 | Electrolytic Cap. | 3.30 50.0V | | N | | | 01 |
| CN1 | LB932030 | Base Post Connector | VH- 3P TE | | | | | 01 |
| CN2 | LB918050 | Base Post Connector | XH 5P TE | | | | | 01 |
| D1 | VB481900 | Diode | 11ES4 | | | | | 01 |
| D1 | VF195600 | Diode | 11ES4 TA1 | | | | | 01 |
| D2 | VB481900 | Diode | 11ES4 | | | | | 01 |
| D2 | VF195600 | Diode | 11ES4 TA1 | | | | | 01 |
| DB1 | VN011300 | Diode Stack | D3SBA20 4.0A 200V | | | | | 03 |
| F1 | KB003570 | Fuse | T 2.00A JU | | | | | 01 |
| F2 | KB003040 | Fuse | T 1.00A S | | N | | | 01 |
| F3 | KB003630 | Fuse | T 5.00A JU | | J | | | 01 |
| F3 | KB003240 | Fuse | T 5.00A S | | N | | | 01 |
| J1 | VD041700 | Jumper Wire | 0.55 | | J | | | |
| L1 | VF790900 | Coil | SU10V-D20010 | | | | | 03 |
| R1 | HF456100 | Carbon Resistor | 1.0K 1/4 J | | | | | 01 |
| R1 | HF756100 | Carbon Resistor | 1.0K 1/4 J | | | | | 01 |
| | | | | | | | | |
| | VT044200 | Headphone | P402416N2410 | | | | | 09 |
| | V5771000 | Headphone | 059711 | | | | | 07 |
| | VT015700 | AC Cord Set | 2P 2.5m 7A | | J | | | 05 |
| | V2916900 | AC Cord Set | 2P 7A 2.5m | | J | | | 05 |
| | V3126200 | AC Cord Set | 2P 2.5m 7A | | J | | | |
| | VT015900 | AC Cord Set | 2P 2.5m | | N | | | 05 |
| | V2917100 | AC Cord Set | 2P 2.5m 2.5A | | N | | | 05 |
| | V3126300 | AC Cord Set | 2P 2.5m | | N | | | |
| | | | | | | | | |
| | V0010200 | Power Supply Unit | | | J | | | 14 |
| | V0010500 | Power Supply Unit | | | N | | | 22 |
| | | | | | | | | |
| | XS419A00 | Speaker | 16.0cm 4Oohm 20W | | | | | 08 |
| | | | | | | | | |
| | VU456000 | Rubber Contact | 1 PEDAL | | | | | 03 |
| | | | | | | | | |

*: New Parts

RANK: Japan only

| REF NO. | PART NO. | DESCRIPTION | | | REMARKS | QTY | RANK |
|---|---|---|---|---|---|---|---|
| | **VC843500** | Push Switch | SDDLB1216A J.U.C.S | | power | | 03 |
| | | | | | | | |
| | **XU445A00** | Power Transformer | J/UL/CSA A | | J | | 09 |
| | **XU447A00** | Power Transformer | N IEC65 E | | N | | 09 |
| | | | | | | | |
| | **VY693500** | Rubber Contact | GH A88 2M | | | | 11 |

*: New Parts

RANK: Japan only

# ■ BLOCK DIAGRAM

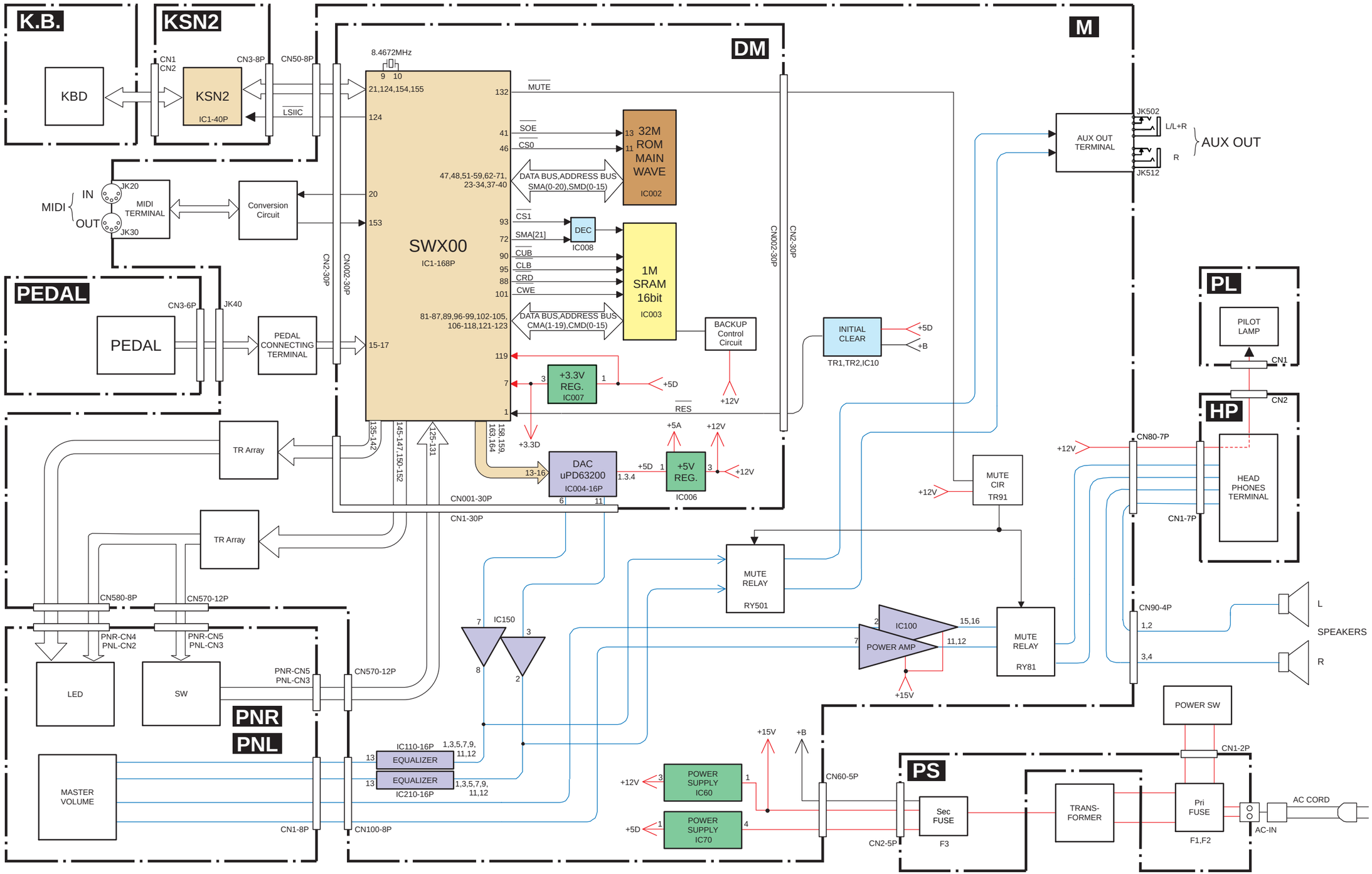

# ■ YDP-201 OVERALL CIRCUIT DIAGRAM (DM)

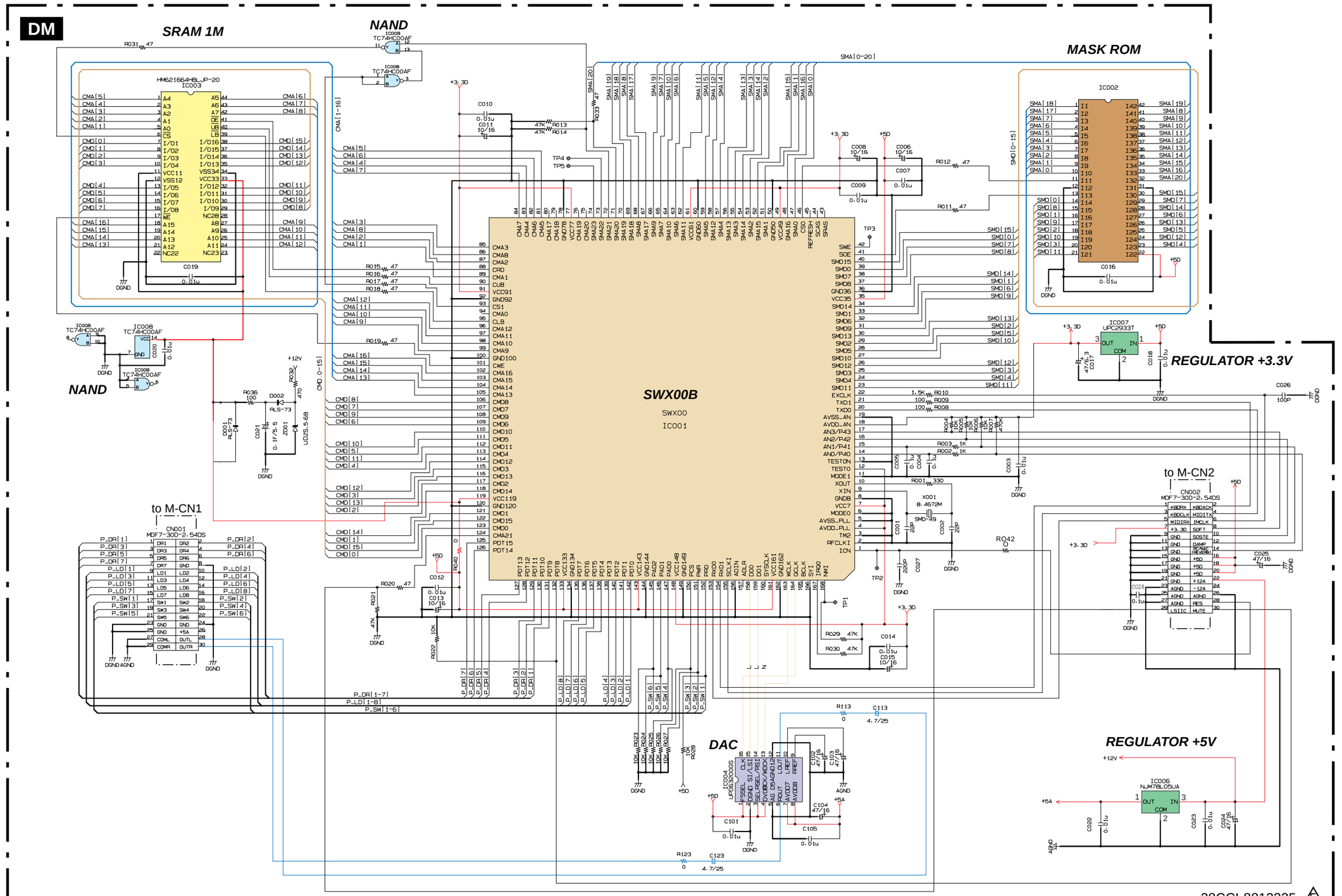


Note: See parts list for details of circuit board component parts.

# ■ YDP-201 OVERALL CIRCUIT DIAGRAM (M)

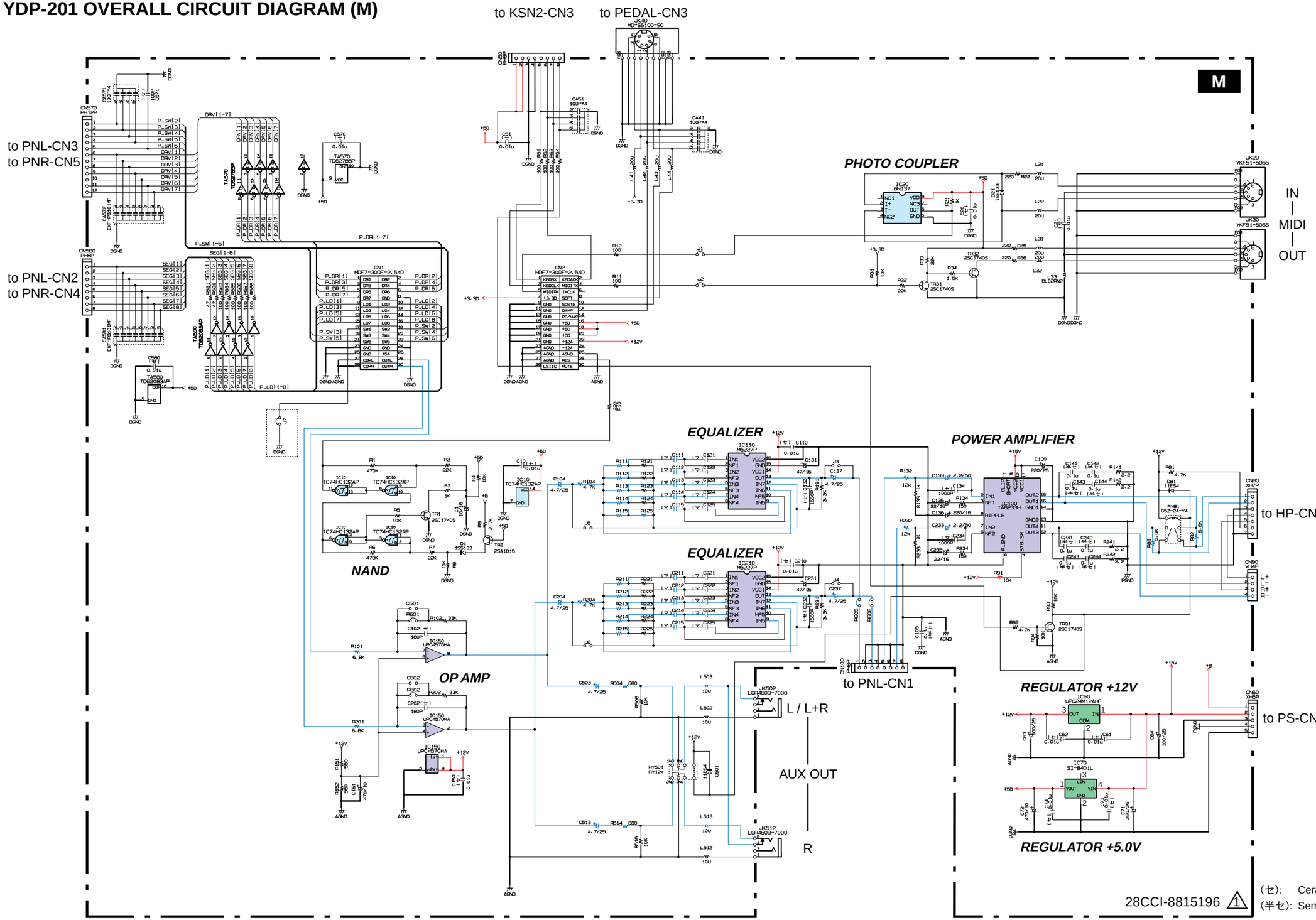


**Note: See parts list for details of circuit board component parts.**

# ■ YDP-201 OVERALL CIRCUIT DIAGRAM (PNL, PNR)

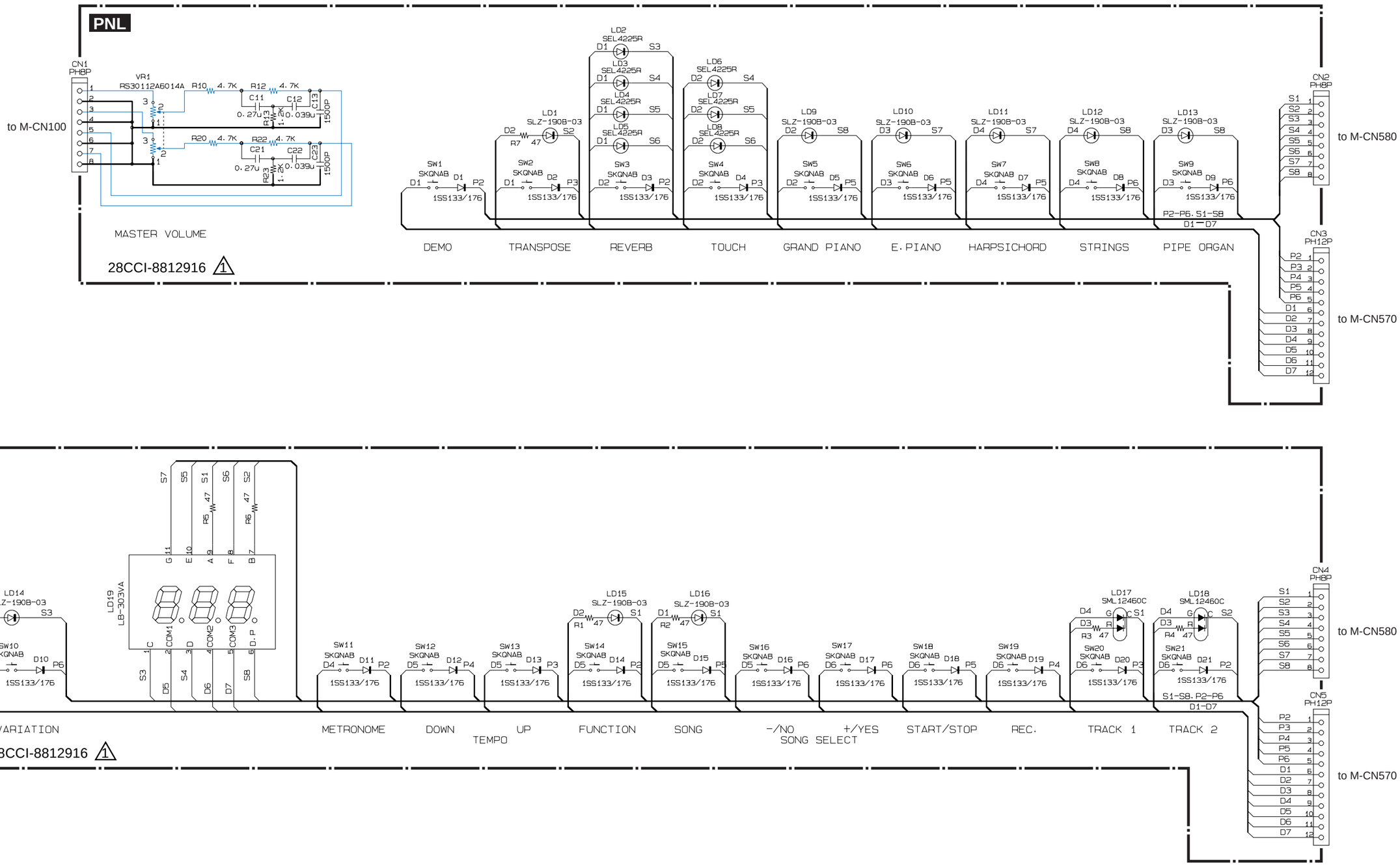


**Note: See parts list for details of circuit board component parts.**

# ■ YDP-201 OVERALL CIRCUIT DIAGRAM (KSN2, AEXL88-H, HE288-L)

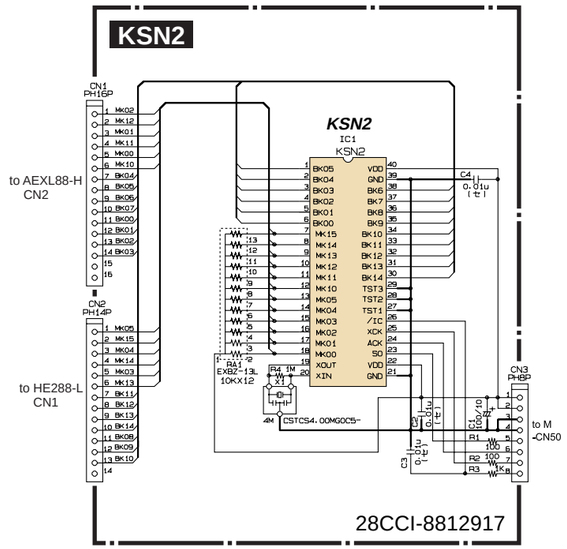


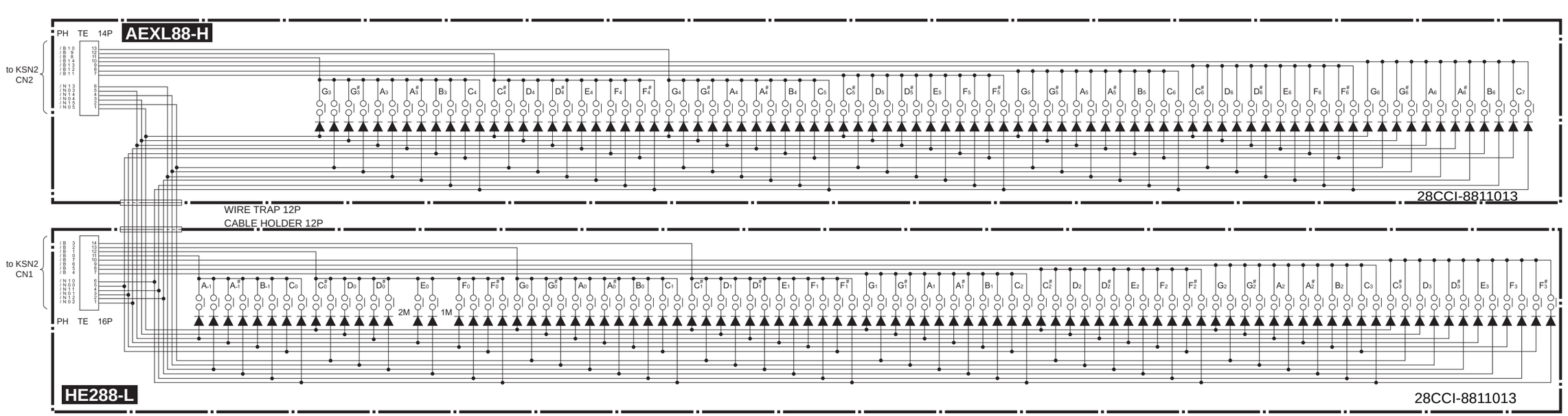


**Note: See parts list for details of circuit board component parts.**

# ■ YDP-201 OVERALL CIRCUIT DIAGRAM (HP, PL, PEDAL, PS)

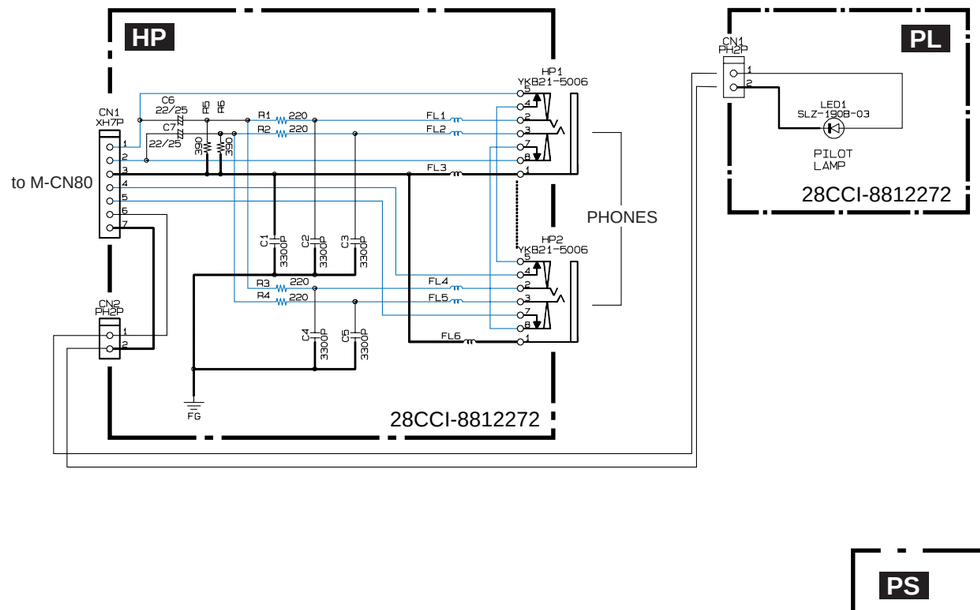





- **μPC24M12AHF** (XU387A00)
  REGULATOR +12V
  M:IC60

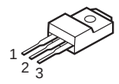

1: INPUT
2: GND
3: OUTPUT

- **SI-8401L** (XR925A00)
  REGULATOR +5V
  M:IC70

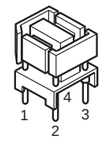

1: VOUT
2: GND
3: LIN
4: VIN

- **NJM78L05UA** (XJ598A00)
  REGULATOR +5V
  DM:IC006

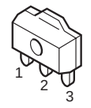

1: OUTPUT
2: COMMON
3: INPUT

- **μPC2933** (XS516A00)
  REGULATOR +3.3V
  DM:IC007

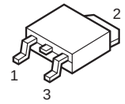

1: V in
2: GND
3: V out

POWER SW
TV-5

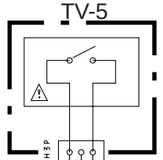

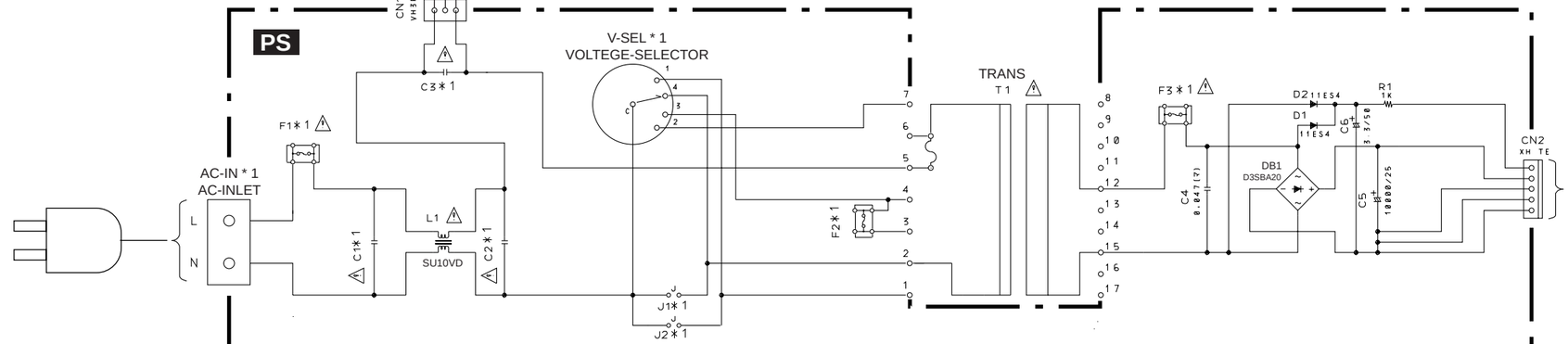


## ＊1 MODEL SPECIFICATION

| DESTINATION | J | U / C | E | N |
|---|---|---|---|---|
| AC-IN | NONPOLARIZED | POLARIZED | NONPOLARIZED | NONPOLARIZED |
| V-SEL | Not installed | Not installed | Not installed | Installed |
| C1.C2 | 0.0047UF | 0.0047UF /125V | 0.0047UF /250V | 0.0047UF /250V |
| C3 | 0.01UF | 0.01UF /125V | 0.01UF /250V | 0.01UF /250V |
| J1 | Installed | Not installed | Installed | — |
| J2 | Not installed | Installed | Not installed | — |
| F1 | 2A | 2A | T1AL | 2A |
| F2 | Not installed | Not installed | Not installed | T1AL |
| F3 | 5A | 5A | T5AL | T5AL |

The above drawing is for Japan

28CCI-8812254

## TRANS SPECIFICATION

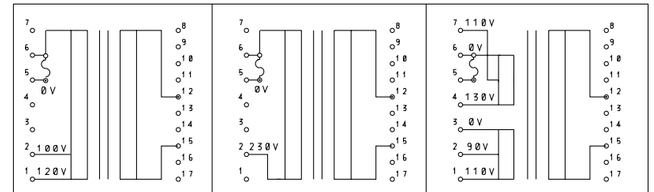


| J / UC | E | N |
|---|---|---|
| | | |

(〒): Myler Capacitor

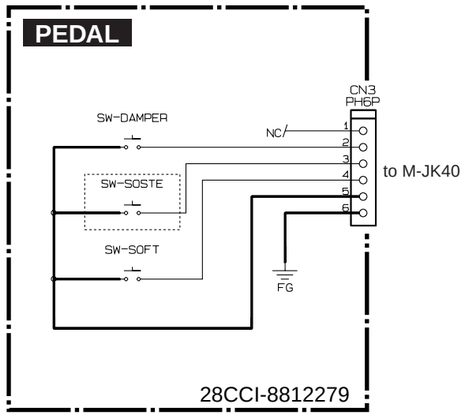


**■ WARNING**
**Components having special characteristics are marked ⚠ and must be replaced with parts having specification equal to those originally installed.**

**Note: See parts list for details of circuit board component parts.**