DIGITAL PIANO

YDP-101/S

SERVICE MANUAL



CONTENTS

SPECIFICATIONS 3
PANEL LAYOUT 3
CIRCUIT BOARD LAYOUT 4
BLOCK DIAGRAM 5
DISASSEMBLY PROCEDURE 6
LSI PIN DESCRIPTION 13
IC BLOCK DIAGRAM 14
CIRCUIT BOARDS 15
TEST PROGRAM 18
INSPECTIONS 19
MIDI DATA FORMAT 20
MIDI IMPLEMENTATION CHART 24
PARTS LIST
OVERALL CIRCUIT DIAGRAM

PK 001616

YAMAHA

HAMAMATSU,JAPAN

1.76K-857 Ⓘ Printed in Japan '99.02

IMPORTANT NOTICE

This manual has been provided for the use of authorized Yamaha Retailers and their service personnel. It has been assumed that basic service procedures inherent to the industry, and more specifically Yamaha Products, are already known and understood by the users, and have therefore not been restated.

WARNING: Failure to follow appropriate service and safety procedures when servicing this product may result in personal injury, destruction of expensive components and failure of the product to per form as specified. For these reasons, we advise all Yamaha product owners that all service required should be performed by an authorized Yamaha Retailer or the appointed service repre sentative.

IMPORTANT: This presentation or sale of this manual to any individual or firm does not constitute authorization, certification, recognition of any applicable technical capabilities, or establish a principal-agent relationship of any form.

The data provided is believed to be accurate and applicable to the unit(s) indicated on the cover. The research engineering, and service departments of Yamaha are continually striving to improve Yamaha products. Modifications are, therefor, inevitable and changes in specification are subject to change without notice or obligation to retrofit. Should any discrepancy appear to exist, please contact the distributor's Service Division.

WARNING: Static discharges can destroy expensive components. Discharge any static electricity your body may have accumulated by grounding yourself to the ground buss in the unit (heavy gauge black wires connect to this buss).

IMPORTANT: Turn the unit OFF during disassembly and parts replacement. Recheck all work before you apply power to the unit.

WARNING: CHEMICAL CONTENT NOTICE!

The solder used in the production of this product contains LEAD. In addition, other electrical / electronic and / or plastic (where applicable) components may also contain traces of chemicals found by the California Health and Welfare Agency (and possibly other entities) to cause cancer and / or birth defects or other reproductive harm.

DO NOT PLACE SOLDER, ELECTRICAL / ELECTRONIC OR PLASTIC COMPONENTS IN YOUR MOUTH FOR ANY REASON WHAT SO EVER!

Avoid prolonged, unprotected contact between solder and your skin! When soldering, do not inhale solder fumes or expose eyes to solder / flux vapor!

If you come in contact with solder or components located inside the enclosure of this product, wash your hands before handling food.

■ WARNING

Components having special characteristics are marked ⚠ and must be replaced with parts having specification equal to those originally installed.

SPECIFICATIONS

● KEYBOARD	88 KEYS (A-1~C7)
● POLYPHNY	32 NOTES MAX.
● VOICE SELECTORS	5 voices+Variation for each voice
● REVERB	ROOM,HALL 1,HALL 2,STAGE
● TOUCH SENSITIVITY	HARD, MEDIUM,SOFT,FIXED
● RECORDER	1,2,START/STOP,REC
● PEDAL CONTROLS	SOFT,SOSTENUTO,DAMPER
● JACKS/CONNECTORS	PHONES x 2,AUX OUT R & L/L+R,MIDI IN/OUT,PEDAL
● OUTPUT LEVEL/IMPEDANCE	Output IMPEDANCE 600 ohm
● MAIN AMPLIFIERS	40W(20W x 2)
● SPEAKERS	16cm x 2
● DIMENTIONS(WxDxH)	Music stand down 1384x468x829mm
	Music stand up 1384x468x1001mm
● WEIGHT	42kg (92.6lbs.)

PANEL LAYOUT

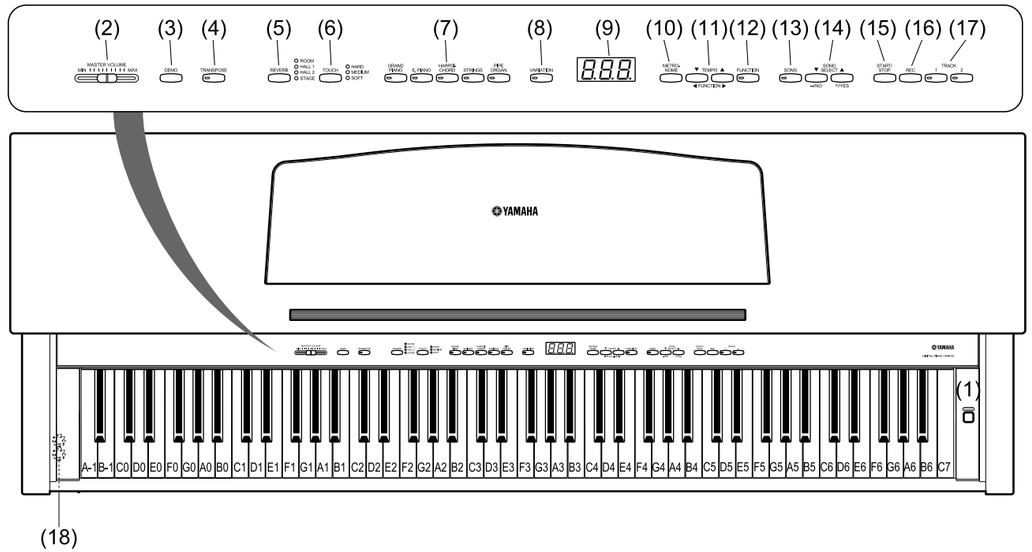

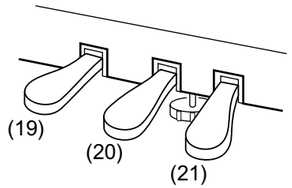

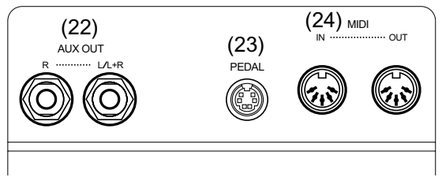

(1) POWER
(2) MASTER VOLUME
(3) DEMO
(4) TRANSPOSE
(5) REVERB
(6) TOUCH
(7) VOICE SELECTORS Buttons
(8) VARIATION
(9) DISPLAY
(10) METRONOME
(11) [▼] TEMPO [▲] / [◄] FUNCTION [►]
(12) FUNCTION
(13) SONG
(14) [▼] SONG SELECT [▲] / [-/NO] [+/YES]
(15) START/STOP
(16) REC
(17) TRACK [1] [2]
(18) PHONES
(19) Soft Pedal
(20) Sostenuto Pedal
(21) Damper Pedal
(22) AUX OUT [R] [L/L+R]
(23) PEDAL
(24) MIDI [IN] [OUT] [THRU]

■ CIRCUIT BOARD LAYOUT

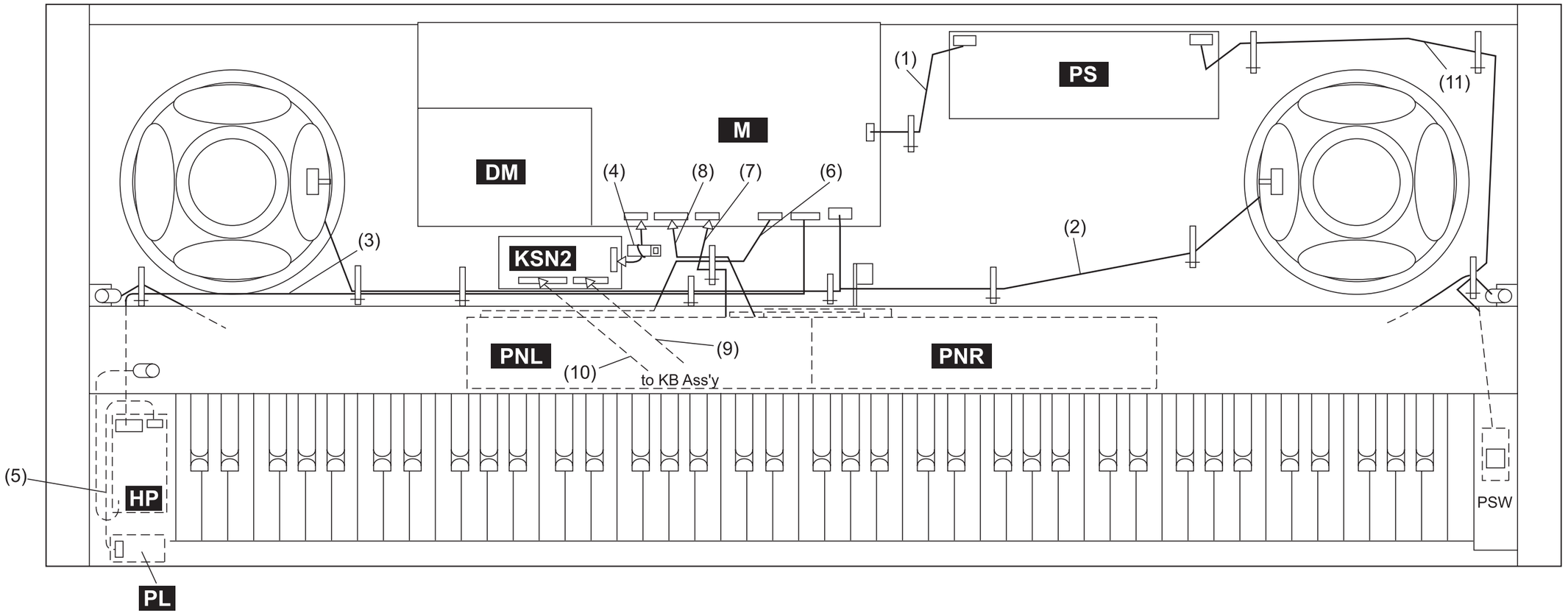

REF. NO.	DESTINATION		CONNECTOR ASSEMBLY	PIN/LENGTH	PARTS LIST REF NO.
1	M-CN60	PS-CN2	POWER	5P/250	580 Main U
2	M-CN90	SPEAKERS (L-WH/BL,R-RE/BL)	SP	4P/L=600, R=650	590
3	M-CN80	HP-CN1	HP	7P/900	600
4	M-CN50	KSN2-CN3	MK-LF	8P	610
5	HP-CN2	PL-CN1	KRD-KRD	2P/100	620
6	M-CN100	PNL-CN1	VOL	8P/400	170 Control P
7	M-CN580	PNL-CN2, PNR-CN4	PN1	8P/180+150	140
8	M-CN570	PNL-CN3, PNR-CN5	PN2	12P/220+150	150
9	KSN2-CN1	MK-CN1	KRD-KRD	16P/L350	70 Keyboard
10	KSN2-CN2	MK-CN2	KRD-KRD	14P/L550	60
11	PS-CN1	Power SW	PSW	2P/1050	50 End B

NOTE: REF.NO. is indicated in the above figure.

BLOCK DIAGRAM

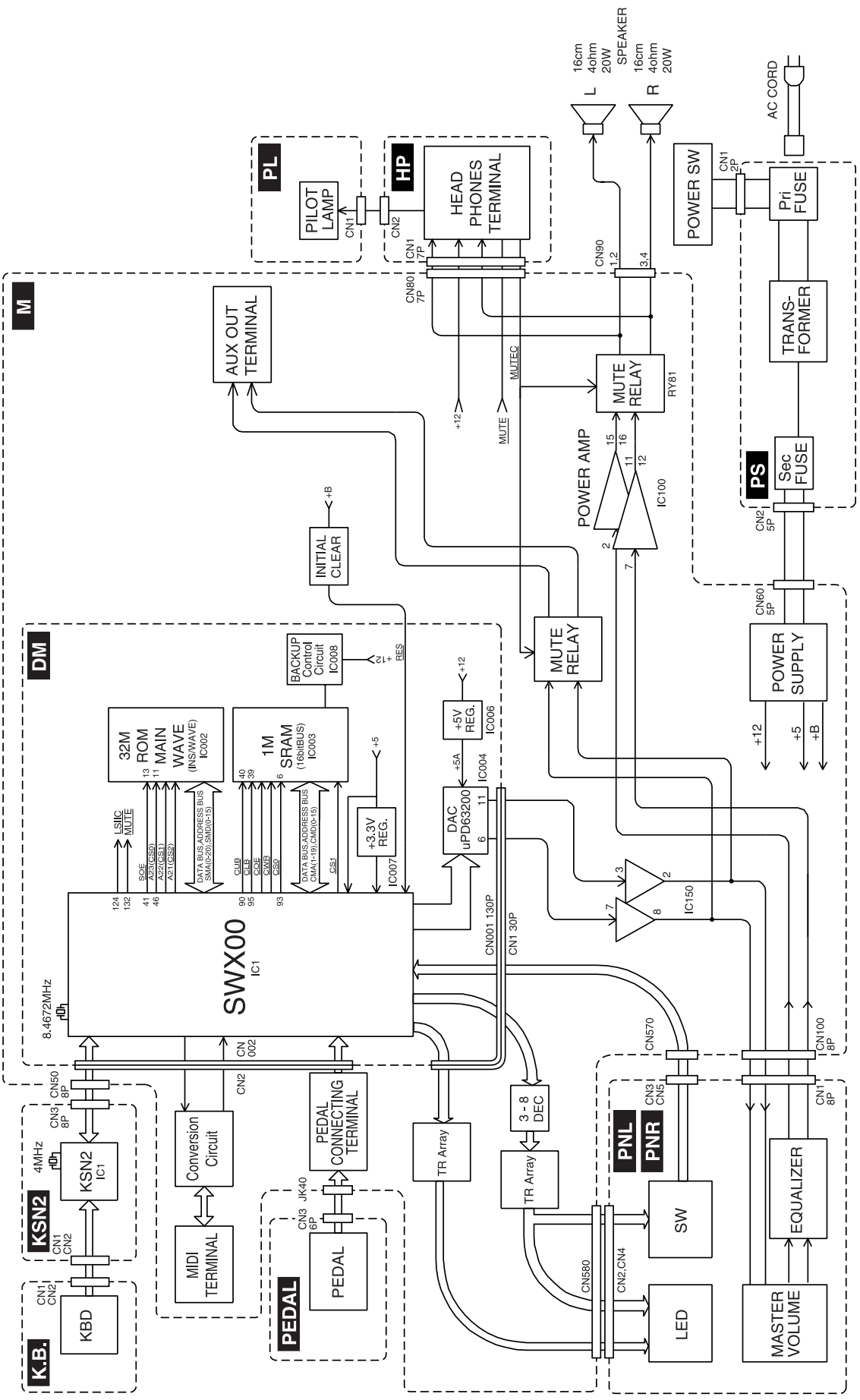

8812914 /0

■ DISASSEMBLY PROCEDURE

1. Top Board Assembly

1-1 Remove the three (3) screws marked [410].
Hold the top board assembly with both hands, slide it to the front, then lift it up. (Fig. 1)
This will give you access to the circuit boards and the units on the keybed.

* To remove these units, remove the screws listed below. (Fig. 2)

DM circuit board
M circuit board: nine (9) screws marked [390A]
Power supply unit: five (5) screws marked [330A]
KSN2 circuit board: four (4) screws marked [390B]
Speaker (L,R): four (4) screws marked [360]

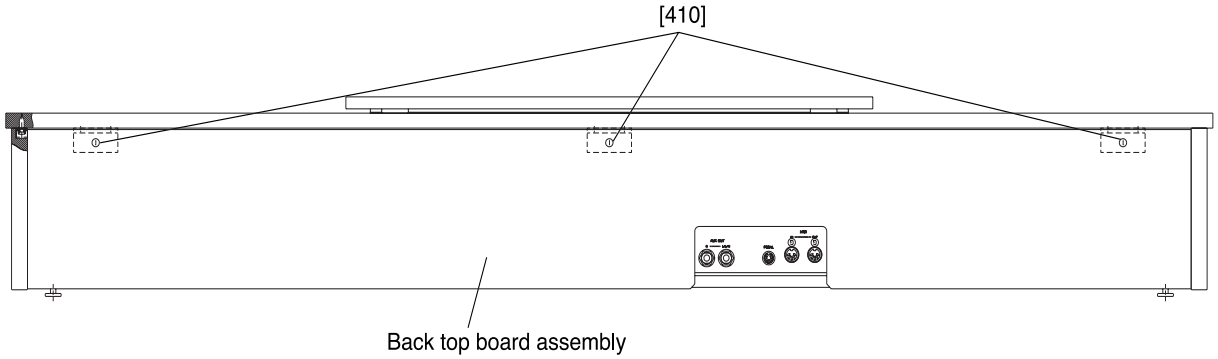

[410]: Truss Head Screw 4.0X20 MFZN2BL (VB934000)

(Fig. 1)

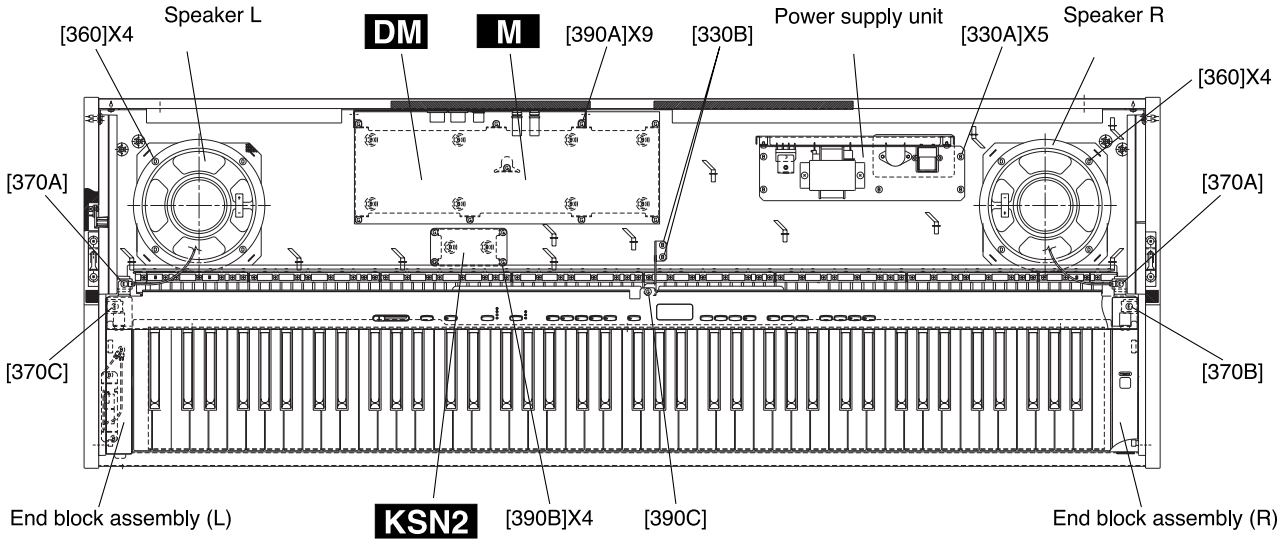

[330]: Bind Head Tapping Screw-1 3.5X12 MFZN2BL (EP030340)
[360]: Truss Head Tapping Screw-1 4.0X20 MFZN2BL (03747290)
[370]: Bind Head Tapping Screw-B 4.0X10 MFZN2BL (EP600240)
[390]: Bind Head Tapping Screw-B 3.0X8 MFZN2BL (EP600190)

(Fig. 2)

2. Key Cover Assembly (YDP-101 only)

2-1 Remove the top board assembly. (See Procedure 1.)

2-2 Remove the screw marked [390]. The rack cover can then be removed. (Fig. 3)

2-3 Set the left end of the rod at the slits of the guide and then lift the key cover assembly.

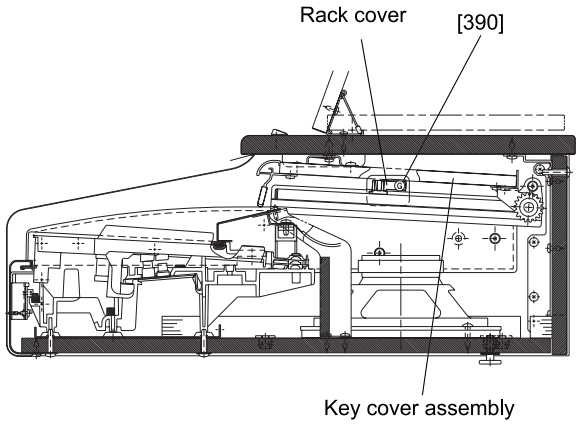

[390]: Bind Head Tapping Screw-B 3.0X8 MFZN2BL (EP600190)

(Fig. 3)

3 PNL and PNR Circuit Boards

3-1 Remove the top board assembly. (See Procedure 1.)

3-2 Remove the key cover assembly. (See Procedure 2.)

3-3 Remove the two (2) screws marked [370A] and the two (2) screws marked [330B]. The control panel assembly can then be removed. (Fig. 2)

* To remove these units, remove the screws listed below. (Fig. 4)

PNL circuit board: seven (7) screws marked [90A]

PNR circuit board: nine (9) screws marked [90B]

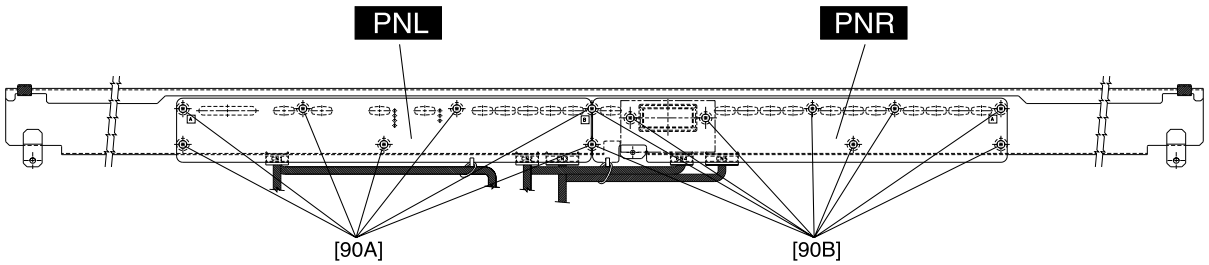

[90]: Bind Head Tapping Screw-B 3.0X6 MFZN2BL (EP600230)

(Fig. 4)

4 HP Circuit Board

4-1 Remove the top board assembly. (See Procedure 1)

4-2 Remove the key cover assembly. (See Procedure 2)

4-3 Remove the control panel assembly. (See Procedure 3-3)

4-4 Remove the screw marked [370C]. The left end block assembly can then be removed. (Fig. 2)

4-5 Remove the three (3) screws marked [330]. The HP circuit board with the phone jack holder can then be removed. (Fig. 5)

4-6 Remove the two (2) nuts marked [520C]. The phone jack holder can then be removed from HP circuit board.(Fig. 6)

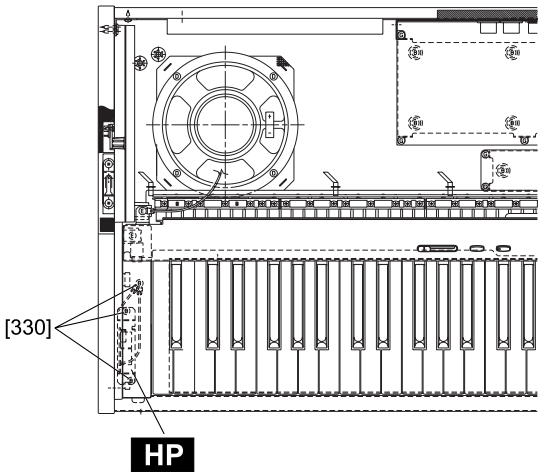

[330]: Bind Head Tapping Screw-1 3.5X12 MFZN2BL (EP030340)

(Fig. 5)

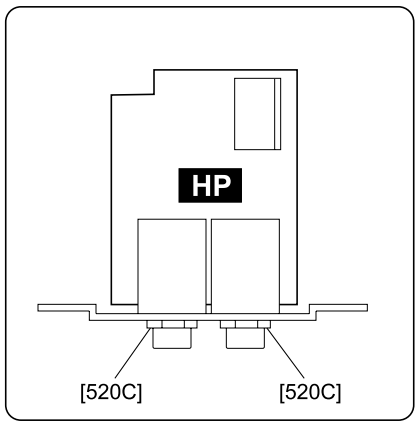

[520]: Hexagonal Nut 12X14X2 MFZN2BL (VB508600)

(Fig. 6)

5 Power Switch Assembly

5-1 Remove the top board assembly. (See Procedure 1.)

5-2 Remove the key cover assembly. (See Procedure 2.)

5-3 Remove the control panel assembly. (See Procedure 3-3.)

5-4 Remove the screw marked [370B]. The right end block assembly can then be removed. (Fig. 2)

5-5 Remove the two (2) screws marked [30]. The power switch assembly can then be removed. (Fig. 7)

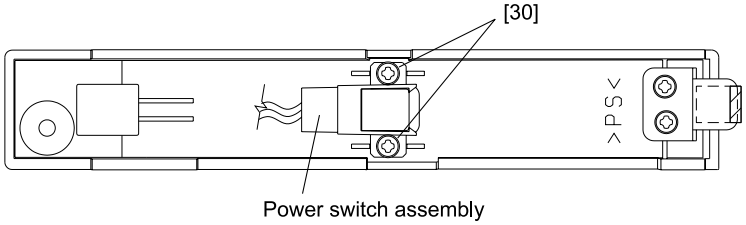

[30]: Bind Head Tapping Screw-1 3.0X8 MFZN2BL (EP600190)

(Fig. 7)

6. Keyboard Assembly

6-1 Remove the top board assembly. (See Procedure 1.)
6-2 Remove the key cover assembly. (See Procedure 2.)
6-3 Remove the control panel assembly. (See Procedure 3-3.)
6-4 Remove the screw marked [370C]. The left end block assembly can then be removed. (Fig. 2)
6-5 Remove the screw marked [370B]. The right end block assembly can then be removed. (Fig. 2)
6-6 Remove the eight (8) screws marked [380]. The keyboard assembly can then be removed. (Fig. 8)

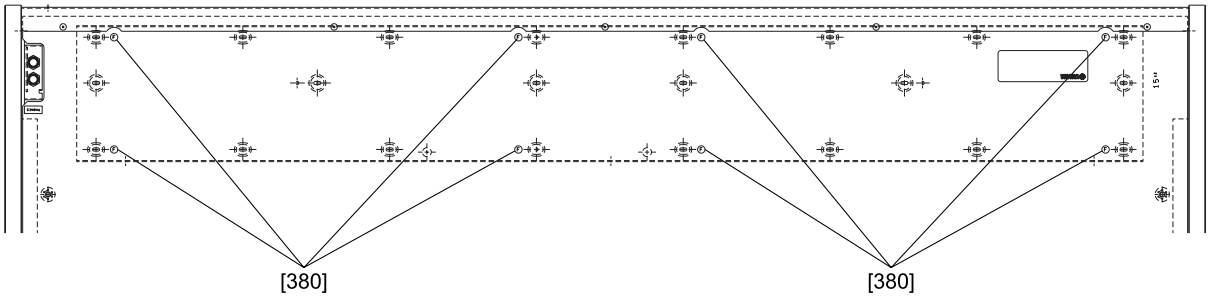

[380]: Bind Head Tapping Screw-S PW4.0X20 MFZN2BL (VT085900)

(Fig. 8)

7. PL Circuit Board

7-1 Remove the top board assembly. (See Procedure 1.)
7-2 Remove the key cover assembly. (See Procedure 2.)
7-3 Remove the control panel assembly. (See Procedure 3-3.)
7-4 Remove the keyboard assembly. (See Procedure 6.)
7-5 Remove the screw marked [70C]. The PL circuit board can then be removed. (Fig. 9)

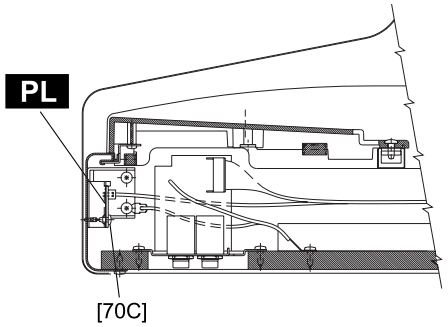

[70]: Bind Head Tapping Screw-C 3.0X6 MFZN2Y (EP630390)

(Fig. 9)

8. Pedal Assembly

8-1 Disconnect the PK cable. (Fig. 10)

8-2 Place the back of the unit on a soft blanket.

8-3 Remove the eight (8) screws marked [80]. The pedal assembly can then be removed. (Fig. 11)

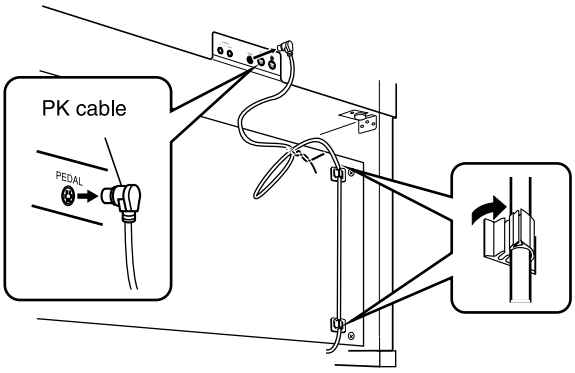

(Fig. 10)

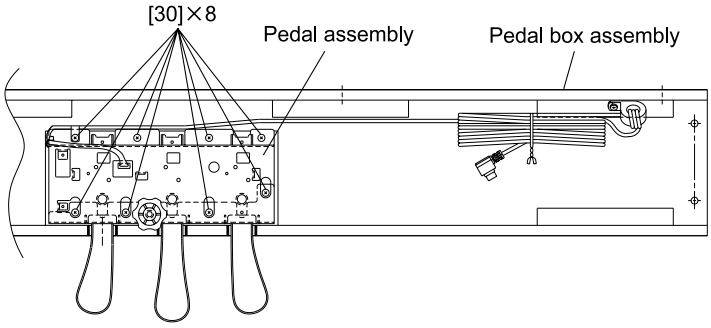

[30]: Bind Head Tapping Screw-1 4.0X14 MFZN2Y (EP040230)

(Fig. 11)

9. Main Unit

9-1 Disconnect the PK cable. (See Procedure 8-1.)

9-2 Disconnect the AC cord. (Fig. 12)

9-3 Remove the four (4) screws marked [S3]. Lift the main unit up slightly, slide it backward, then lift it up. (Fig. 12; Fig. 13)

* Be sure to place your hands at least 15cm from either end of the main unit and take care not to pinch your fingers when removing it.

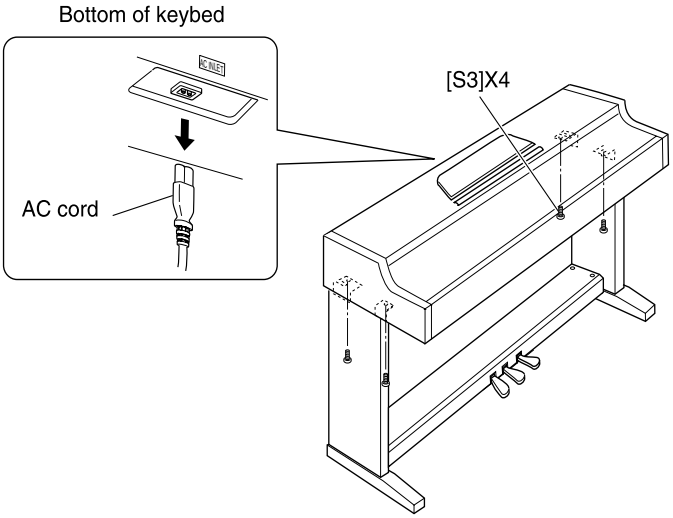

[S3]: Bind Head Screw 6.0X16 MFZN2BL (EG360020)

(Fig. 12)

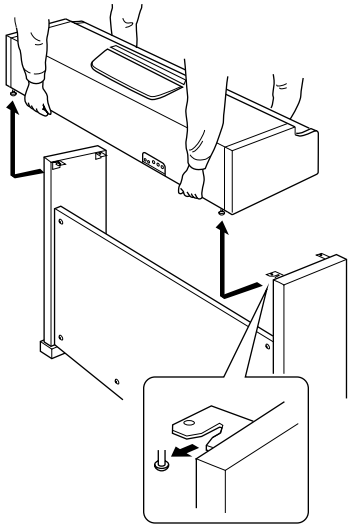

(Fig. 13)

10. Disassembling the Keyboard

10-1 Remove the keyboard assembly. (See Procedure 6.)

10-2 Remove the twenty-two (22) screws marked [30]. The keyboard holder can then be removed from the keyboard assembly. (Fig. 14)

10-3 Remove the AELC L and AELC H circuit boards while pressing the hooks A inward. (Fig. 15)

10-4 Remove the white keys (G, B, D, F), then remove the keys (A, C, E).

10-4-1 Remove the eight (8) screws marked [200A]. (Fig. 16)

10-4-2 After removing the rubber contact, the white keys (G, B, D, F) and (A, C, E) can be removed while lifting them from the front and removing the tips of the keys from the keyboard frame.

10-5 Remove the black keys.

10-5-1 Remove the white keys (G, B, D, F) and (A, C, E). (See Procedure 10-4.)

10-5-2 Remove the next octaves rubber contact. The black keys can be removed while lifting the white key G of next octave slightly up, lifting the black keys from the front, and removing the tip of the key from the keyboard frame.

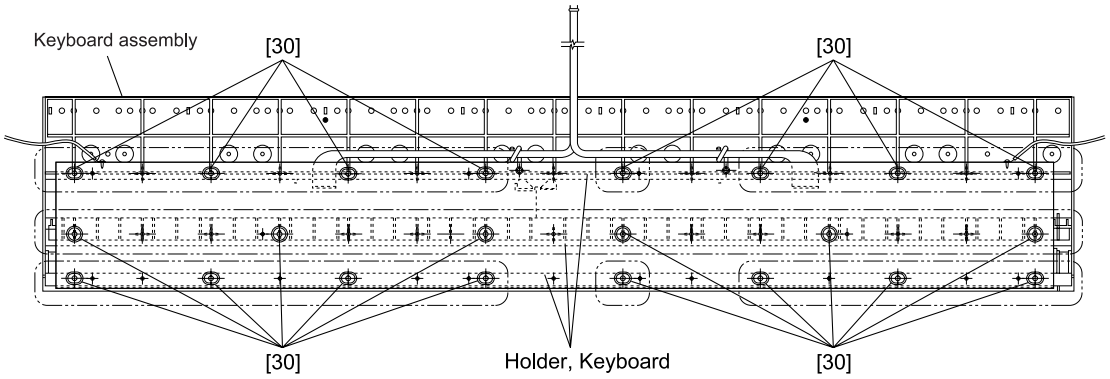

[30]: Bind Head Tapping Screw-P 3.0X12 MFZN2Y (EP600300)

(Fig. 14)

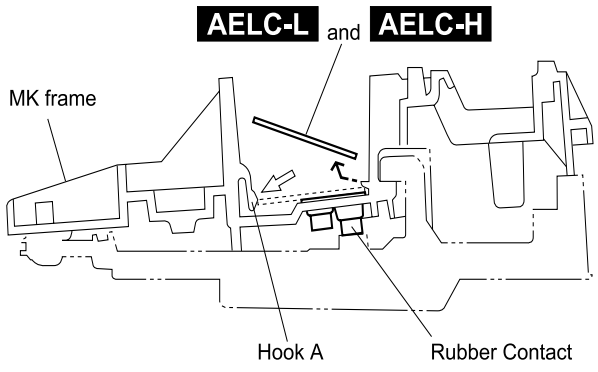

(Fig. 15)

10-6 Remove the seven (7) screws marked [200B]. The white keys (B, D, F), (C, E) and the black keys (A#, C#, D#, F#) can then be removed. (Fig. 16)

10-7 Remove the four (4) screws marked [200C]. The white keys A, (G, B), C' and the black keys (G#, A#) can then be removed. (Fig. 16)

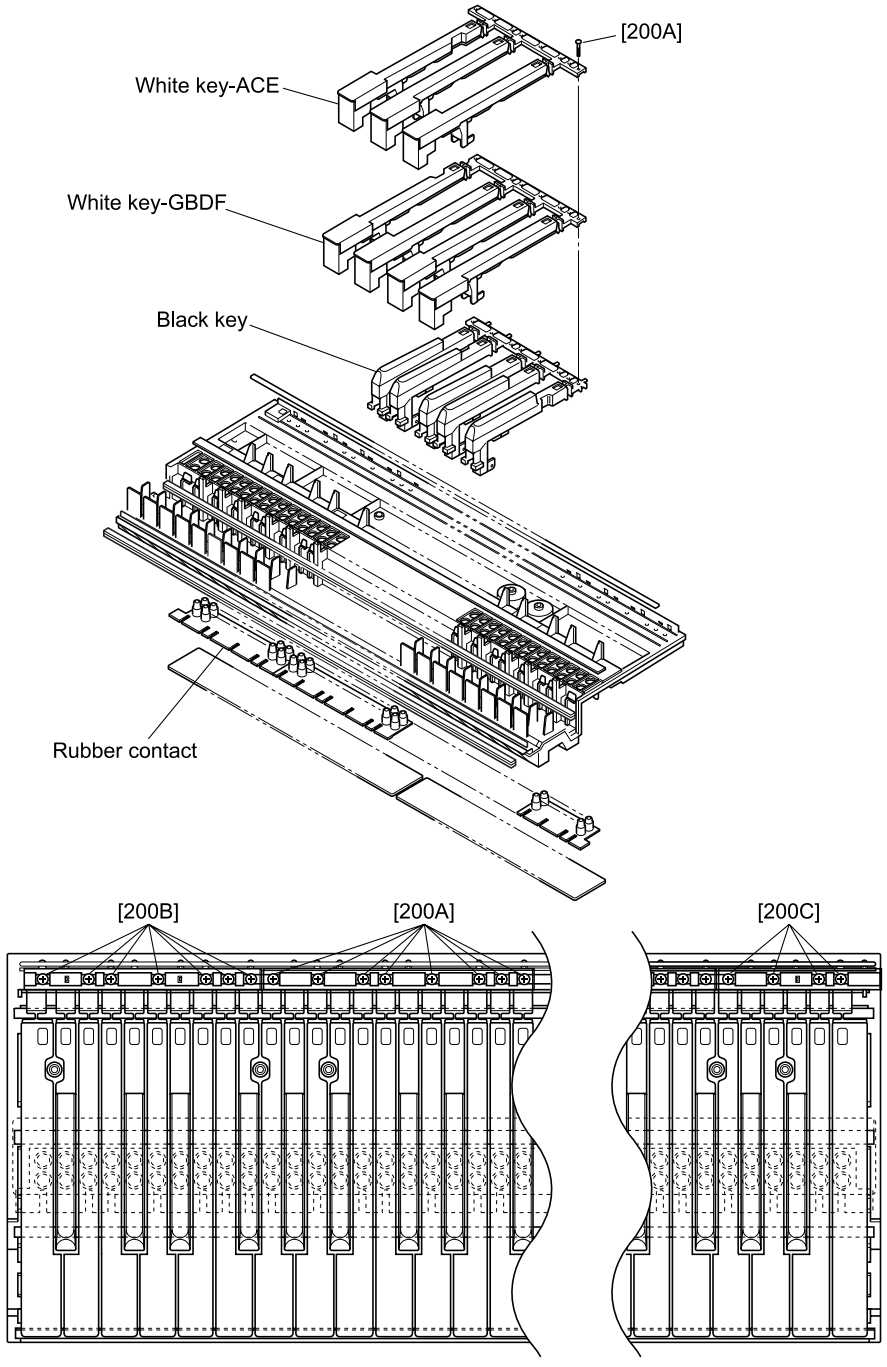

[200]: Bind Head Tapping Screw-P 3.0X20 MFZN2 (VP069800)

(Fig. 16)

LSI PIN DESCRIPTION

HG73C205FD (XU947A00) SWX00 TONE GENERATOR DM:IC001

PIN NO.	NAME	I/O	FUNCTION	PIN NO.	NAME	I/O	FUNCTION
1	ICN	I	Initial clear	85	CMA3	O	Program address bus
2	RFCLKI	I	PLL Clock	86	CMA8	O	Program address bus
3	TM2	I	PLL Control	87	CMA2	O	Program address bus
4	AVDD_PLL		Power supply	88	CRD	O	read signal
5	AVSS_PLL		Ground	89	CMA1	O	Program address bus
6	MODE0	I	SWX dual mode	90	CUB	O	high byte effective signal
7	VCC7		Power supply	91	VCC91		Power supply
8	GND8		Ground	92	GHND92		Ground
9	XIN	I	crystal oscillator	93	CS1	O	CS signal
10	XOUT	O	crystal oscillator	94	CMA0	O	Program address bus
11	MODE1	I	SWX separate mode	95	CLB	O	low byte effective signal
12	TEST0	I	TEST pin	96	CMA12	O	Program address bus
13	TESTON	I	TEST pin	97	CMA11	O	Program address bus
14	AN0-P40	I	A/D converter	98	CMA10	O	Program address bus
15	AN1-P41	I	A/D converter	99	CMA9	O	Program address bus
16	AN2-P42	I	A/D converter	100	GND100		Ground
17	AN3-P43	I	A/D converter	101	CWE	O	write signal
18	AVDD_AN		Power supply	102	CMA16	O	Program address bus
19	AVSS_AN		Ground	103	CMA15	O	Program address bus
20	TXD0	O	for MIDI or TO-HOST	104	CMA14	O	Program address bus
21	TXD1	O	for MIDI	105	CMA13	O	Program address bus
22	EXCLK	I	Crystal oscillator	106	CMD8	I/O	Program memory Data bus
23	SMD11	I/O	Wave memory data bus	107	CMD7	I/O	Program memory Data bus
24	SMD4	I/O	Wave memory data bus	108	CMD9	I/O	Program memory Data bus
25	SMD3	I/O	Wave memory data bus	109	CMD6	I/O	Program memory Data bus
26	SMD12	I/O	Wave memory data bus	110	CMD10	I/O	Program memory Data bus
27	SMD10	I/O	Wave memory data bus	111	CMD5	I/O	Program memory Data bus
28	SMD5	I/O	Wave memory data bus	112	CMD11	I/O	Program memory Data bus
29	SMD2	I/O	Wave memory data bus	113	CMD4	I/O	Program memory Data bus
30	SMD13	I/O	Wave memory data bus	114	CMD12	I/O	Program memory Data bus
31	SMD9	I/O	Wave memory data bus	115	CMD3	I/O	Program memory Data bus
32	SMD6	I/O	Wave memory data bus	116	CMD13	I/O	Program memory Data bus
33	SMD1	I/O	Wave memory data bus	117	CMD2	I/O	Program memory Data bus
34	SMD14	I/O	Wave memory data bus	118	CMD14	I/O	Program memory Data bus
35	VCC35		Power supply	119	VCC119		Power supply
36	GND36		Ground	120	GND115		Ground
37	SMD8	I/O	Wave memory data bus	121	CMD1	I/O	Program memory Data bus
38	SMD7	I/O	Wave memory data bus	122	CMD15	I/O	Program memory Data bus
39	SMD0	I/O	Wave memory data bus	123	CMD0	I/O	Program memory Data bus
40	SMD15	I/O	Wave memory data bus	124	CMA21	O	Program address bus
41	SOE	O	read signal	125	PDT15	I/O	SWX access data bus
42	SWE	O	write signal	126	PDT14	I/O	SWX access data bus
43	SRAS	O	RAS signal	127	PDT13	I/O	SWX access data bus
44	SCAS	O	CAS signal	128	PDT12	I/O	SWX access data bus
45	REFRESH	O	REFRESH signal	129	PDT11	I/O	SWX access data bus
46	CS0	O	CS signal	130	PDT10	I/O	SWX access data bus
47	SMA0	O	Memory address bus	131	PDT9	I/O	SWX access data bus
48	SMA16	O	Memory address bus	132	PDT8	I/O	SWX access data bus
49	VCC49		Power supply	133	VCC133		Power supply
50	GND50		Ground	134	GND134		Ground
51	SMA1	O	Memory address bus	135	PDT7	I/O	SWX access data bus
52	SMA15	O	Memory address bus	136	PDT6	I/O	SWX access data bus
53	SMA2	O	Memory address bus	137	PDT5	I/O	SWX access data bus
54	SMA14	O	Memory address bus	138	PDT4	I/O	SWX access data bus
55	SMA3	O	Memory address bus	139	PDT3	I/O	SWX access data bus
56	SMA13	O	Memory address bus	140	PDT2	I/O	SWX access data bus
57	SMA4	O	Memory address bus	141	PDT1	I/O	SWX access data bus
58	SMA12	O	Memory address bus	142	PDT0	I/O	SWX access data bus
59	SMA5	O	Memory address bus	143	VCA143		Power supply
60	GND60		Ground	144	GND144		Ground
61	VCC61		Power supply	145	PAD2	I	SWX access address bus
62	SMA11	O	Memory address bus	146	PAD1	I	SWX access address bus
63	SMA6	O	Memory address bus	147	PAD0	I	SWX access address bus
64	SMA10	O	Memory address bus	148	VCC148		Power supply
65	SMA7	O	Memory address bus	149	GND149		Ground
66	SMA9	O	Memory address bus	150	PCS	I	Chip select
67	SMA17	O	Memory address bus	151	PWR	I	write enable
68	SMA8	O	Memory address bus	152	PRD	I	read enable
69	SMA18	O	Memory address bus	153	RXD0	I	for MIDI or TO-HOST
70	SMA19	O	Memory address bus	154	RXD1	I	for MIDI or Key scan
71	SMA20	O	Memory address bus	155	SCLKI	I	EXT Clock
72	SMA21	O	Memory address bus	156	ADIN	I	A/D converter
73	SMA22	O	Memory address bus	157	ADLR	O	A/D converter LR clock
74	SMA23	O	Memory address bus	158	DO0	O	DAC
75	CMA20	O	Program address bus	159	DO1	O	DAC
76	CMA19	O	Program address bus	160	SYSCLK	O	1/2 clock
77	VCC77		Power supply	161	VCC161		Power supply
78	GND78	O	Ground	162	GND162		Ground
79	CMA18	O	Program address bus	163	WCLK	O	for DAC LR clock
80	CMA17	O	Program address bus	164	QCLK	O	1/12 clock
81	CMA5	O	Program address bus	165	BCLK	O	IIS-DAC clock
82	CMA6	O	Program address bus	166	SYI	I	Synch signal
83	CMA4	O	Program address bus	167	IRQ0	I	Interrupt request
84	CMA7	O	Program address bus	168	NMI	I	Interrupt request

● **YMZ702-D** (XR632A00) **KSN2** (Key Scanner) KSN2:IC1

PIN NO.	NAME	I/O	FUNCTION	PIN NO.	NAME	I/O	FUNCTION
1	BK5	O	Key block (open drain)	21	GND		Ground
2	BK4	O		22	VDD		Power supply
3	BK3	O		23	SO	O	Serial data
4	BK2	O		24	ACK	I	Ackno wledge / Mode select
5	BK1	O		25	XCK	I	Clock for serial date
6	BK0	O		26	MC	I	Initial clear
7	MK15	I	1 st make contact	27	TST1	I	Test mode
8	MK14	I		28	TST2	I	(L, L: normal mode, others: test)
9	MK13	I		29	XCHNH	I	In hibit of serial clock
10	MK12	I		30	BK14	O	
11	MK11	I		31	BK13	O	
12	MK10	I		32	BK12	O	
13	MK05	I	2nd make contact	33	BK11	O	Key block (open drain)
14	MK04	I		34	BK10	O	
15	MK03	I		35	BK9	O	
16	MK02	I		36	BK8	O	
17	MK01	I		37	BK7	O	
18	MK00	I		38	BK6	O	
19	XOUT	O	Crystal osc. output (4 MHz)	39	GND		Ground
20	XIN	I	Crystal osc. input (4 MHz)	40	VDD		Pow er sup ply

● **μPD63200GS-E1** (XP867A00) **DAC** (Digital to Analog Converter) DM:IC004

PIN NO.	NAME	I/O	FUNCTION	PIN NO.	NAME	I/O	FUNCTION
1	4/8 FS	I	4/8 Fs selection	9	R. REF		Channel R voltage reference
2	D. GND		Digital ground	10	L. REF		Channel L voltage reference
3	16/18 BIT	I	16 bit/ 18 bit selection	11	L. OUT	O	Channel L output
4	D. VDD		Digital power supply	12	A. GND		Analog ground
5	A. GND		Analog ground	13	LRCX/WD	I	Word clock
6	R. OUT	O	Channel R output	14	LR/RSI	I	Channel R series input
7	A. VDD		Analog power supply	15	SI/LSI	I	Channel L series input
8	A. VDD		Analog power supply	16	CLK	I	Clo ck

■ IC BLOCK DIAGRAM

● **TC74HC00AF**(XD655A00)
Quad 2 Input NAND
DM circuit board:IC008

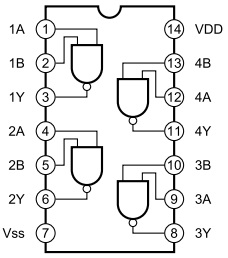

● **TC74HC132AP**(IR013200)
● **SN74HC132N**(IR013250)
Quad 2 Input NAND
M circuit board: IC10

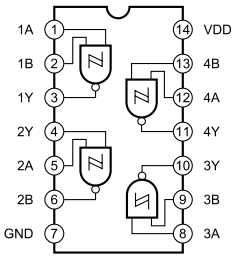

● **μPC4570HA** (XB247A00)
Dual Operational Amplifier
M circuit board:IC150

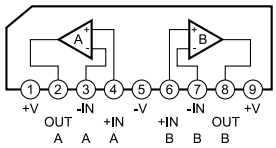

■ CIRCUIT BOARDS

• M Circuit Board

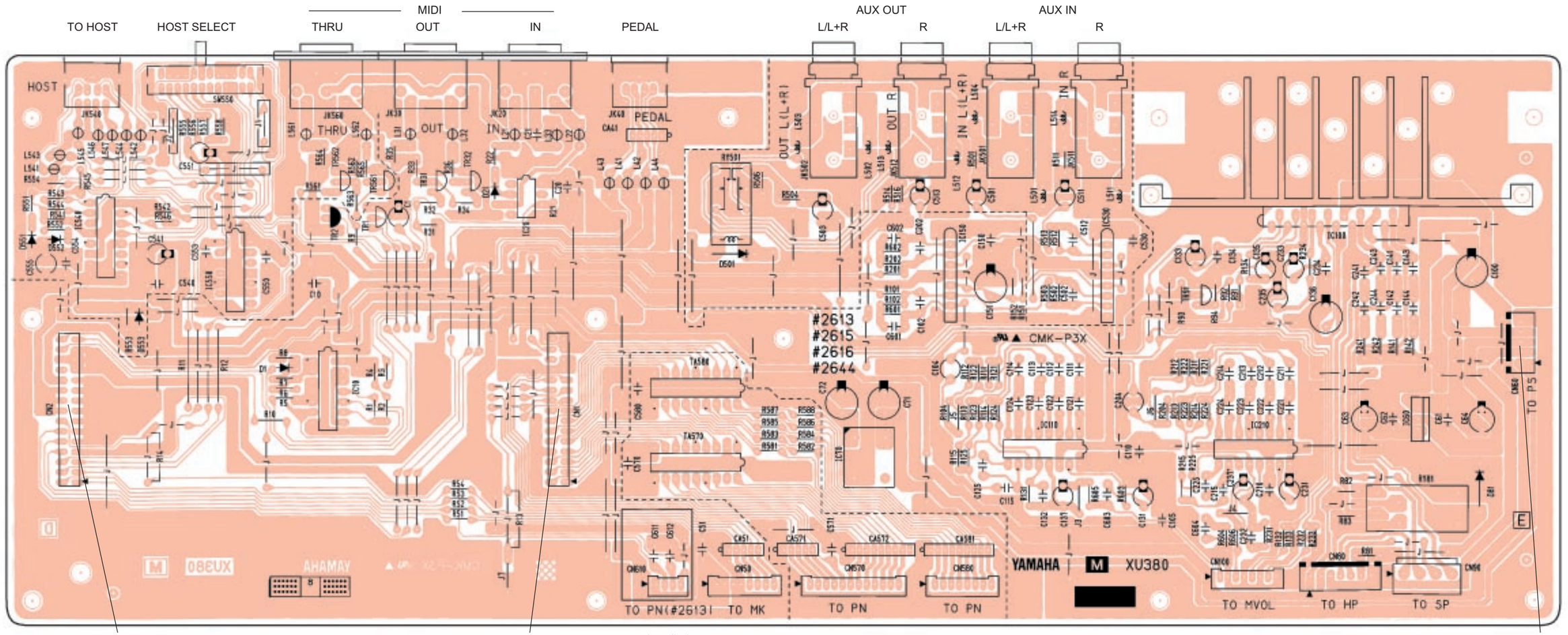

Component side

Note: See parts list for details of circuit board component parts.

M:2NA-VZ89960 ⚠5

● DM Circuit Board

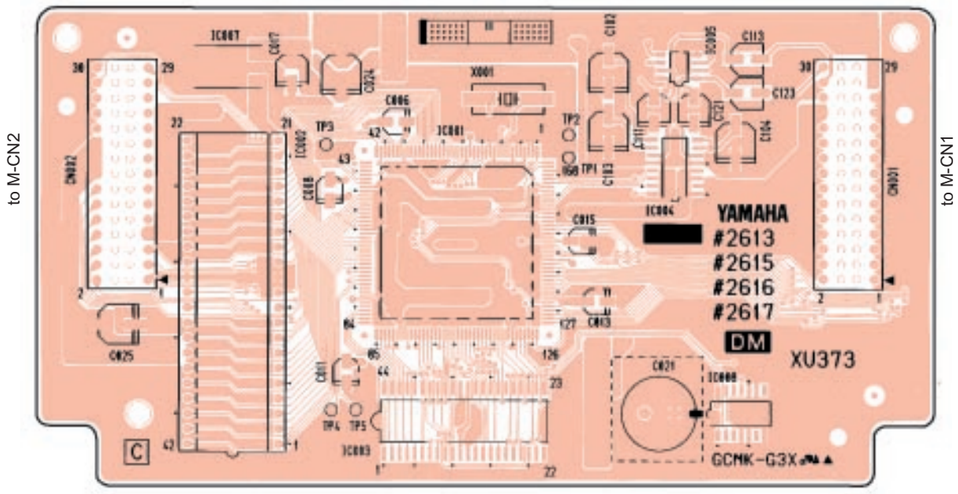

Component side

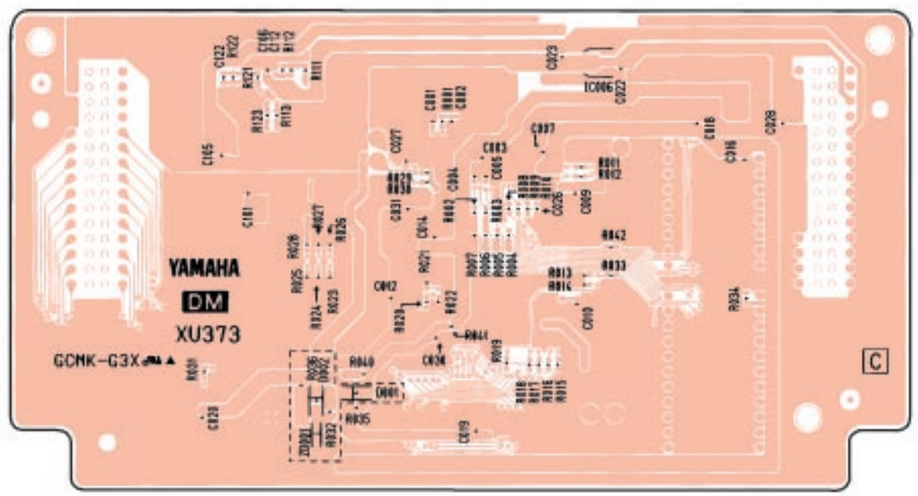

Pattern side

● PL Circuit Board

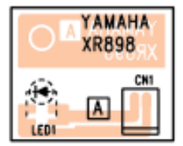

to HP-CN2

Component side

● PS Circuit Board

to M-CN60

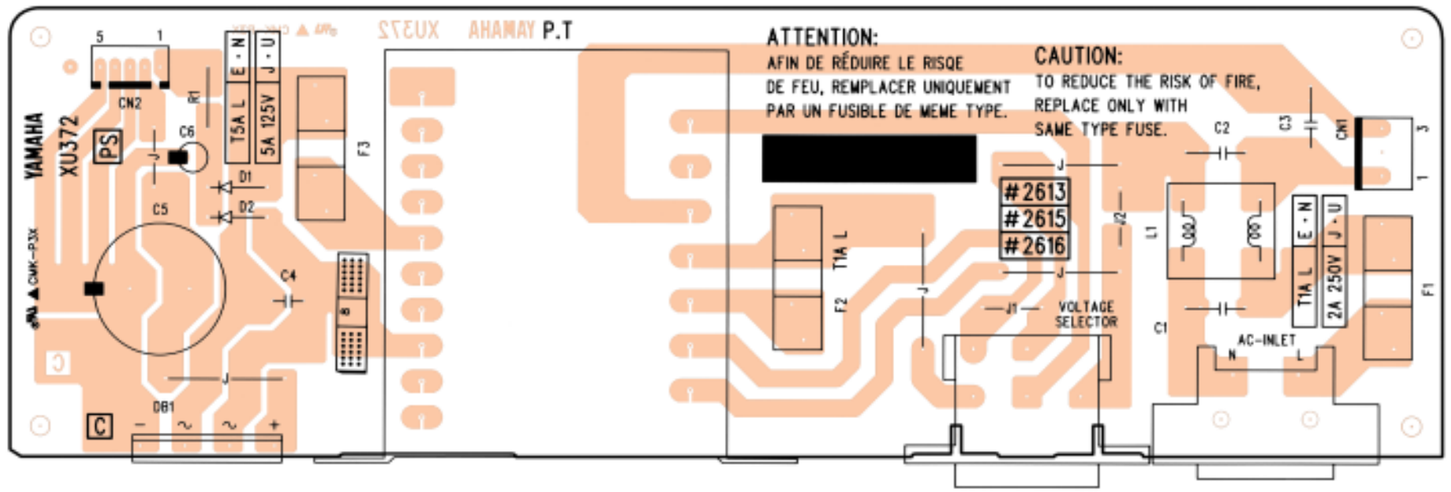

AC INLET

Component side

● HP Circuit Board

to Power switch assembly

PHONES

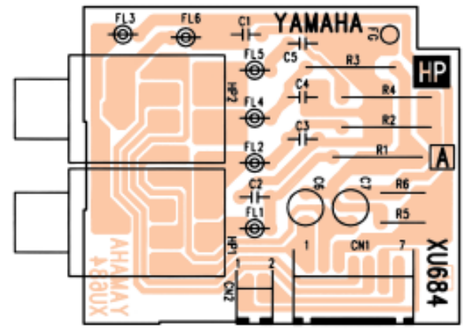

to PL-CN1 to M-CN80

Component side（部品側）

DM:2NA-VZ90000 ⓪
HP:2NA-V202110 ①
PL:2NA- ①
PS:2NA-V001130 ⓪

Note: See parts list for details of circuit board component parts.

VN63740

● KSN2 Circuit Board

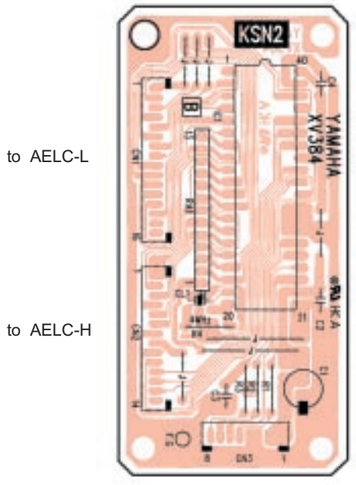

● PNR Circuit Board

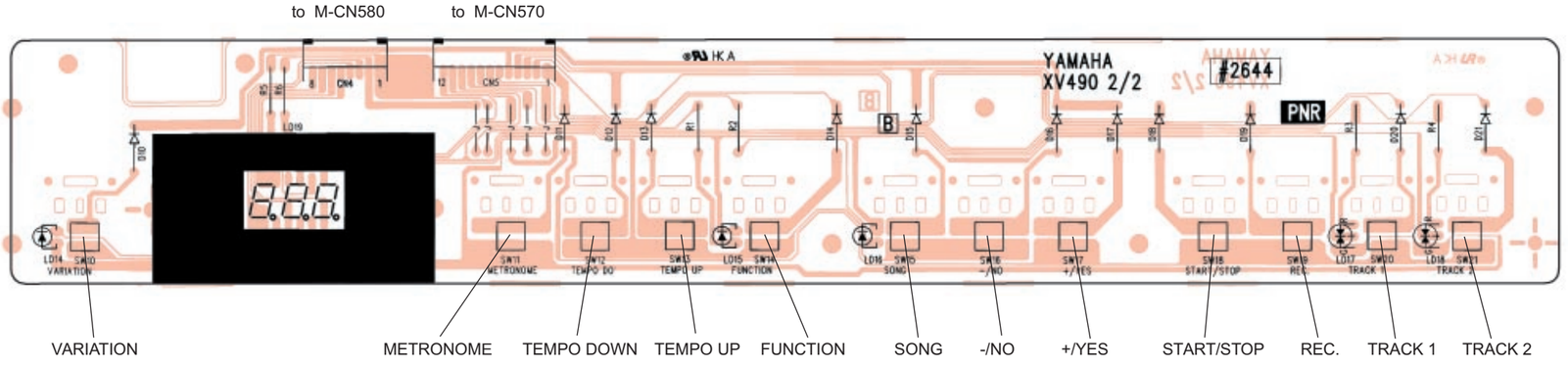

● PNL Circuit Board

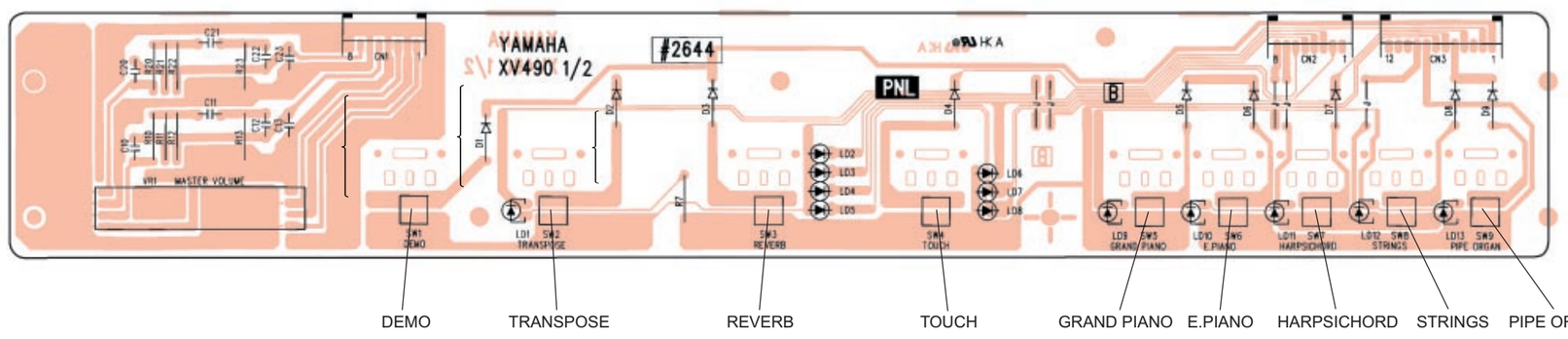

LED installing

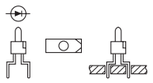

LD17 • LD18 installing

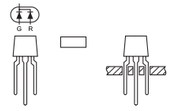

SW • VR installing



VR1 installing

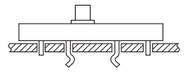

Note: See parts list for details of circuit board component parts.

KSN2:2NA-V306660
PNR:2NA-V306650 △0
PNL:2NA-V306650 △0

■ TEST PROGRAM

1. Preparation

To check the unit using the test program, the following measuring instruments and jigs will be required:

Level meter (IHF-C cave)

Frequency counter

Notes: Impedance must be 1Mohm or above.

Use stereo plugs, and connect 33ohm load at PHONES terminal.

Unit setting:

MASTER VOLUME:	Maximum
Tone:	PIANO 1
Pedal:	OFF
Reverb:	OFF
Other terminals:	Not connected

2. How to enter the Test Program

While depressing the [C2#], [F2] and [G2#] keys, turn the power switch ON.

3. Proceeding through the Test Program

The LED will display “TST” when the test program is entered.

To select the program number, press the [Tempo +/-] button.

To start the test, press the [Start/Stop] button.

The LED will display “PAS” if the test result is OK.

To proceed to the next test, press the [START/STOP] button again.

The LED will display “nG” if the test result is NG.

Press the [DEMO] button to proceed to the next test.

Test items

No.	LED display for each test	Test Functions and Judgment criteria
1	T01: Version	Displays version for ROM. (PROGRAM, WAVE)
2	T02: ROM Check1	Checks all ROMs which are connected to CPU.
3	T03: RAM Check1	Checks all RAMs which are connected to CPU.
4	T04: Wave ROM Check1	Checks the wave ROM.
11	T11: TG1 Check	Outputs the sine wave by changing the channels (1ch-32ch) in sequence from F3 to C6. When a voice switch is depressed, the tone of the voice will sound. After autoscaling is finished, individual keys can be played. (If playing two or more keys simultaneously, the key pressed first takes priority.)
13	T13: PITCH Check	Connect the frequency counter to the [PHONES] terminal. Check that the 440.0 Hz sine wave is output.
14	T14: Output R	Check output level (1 kHz). AUX OUT L/L+R: Less than -60 dBm AUX OUT R: -14 dBm +/- 2 dB PHONES L: Less than -60 dBm, PHONES R: -25 dBm +/- 2 dB
15	T15: Output L	Check output level (1 kHz). AUX OUT L/L+R: -14 dBm +/- 2 dB AUX OUT R: Less than -60 dBm PHONES L: -25 dBm +/- 2 dB, PHONES R: Less than -60 dBm
16	T16: EQ Low	For factory test use only.
17	T17: EQ Mid	For factory test use only.
18	T18: EQ High	For factory test use only.
19	T19: D/A Noise	Check D/A converter noise. Play a note and check that there is no noise during the PIANO 1 release time. (Damper pedal is ON)
20	T20: SW, LED Check	Check switches and LEDs on the panel. Press the switch which is displayed on the LED.(The order is shown in the Table 1.) A pre-assigned note is output when the switch is pressed. (With some switches, the corresponding LED will light up).
21	T21: All Panel LED On	Check that all panel LEDs are lit.
31	T31: Soft Pedal Check	Check that C3 s output when pushing the pedal and C4 is output when releasing the pedal, and that the LED displays OK.
32	T32: Soste. Pedal Check	Check that C3 is output when pushing the pedal and C4 is output when releasing the pedal, and that the LED displays OK.
33	T33: Damper Pedal Check	Check that C3 is output when pushing the pedal and C4 is output when releasing the pedal, and that the LED displays OK.
37	T37: MIDI Check	After connecting the MIDI IN and MIDI OUT, execute the test. The test result appears on the LED display.
38	T38: To Host Check	Connect pin 1 to pin 2, pin 3 to pin 5, and pin 6 to pin 8 on the TO HOST terminal, and execute the test. Check that the following notes are output when changing the HOST SELECT switch position according to the LED indication, and that the LED displays OK. Mac position: C5, PC1 position: C4, PC2 position: C3
41	T41: ROM Check 2	For factory test use only.
42	T42: RAM Check 2	For factory test use only.
43	T43: Wave ROM Check 2	For factory test use only.
46	T46: Back Up Check 2	For factory test use only.
47	T47: Factory Set	All RAMs are initialized and set to the factory preset data when executing this test.
48	T48: Test Mode Exit	Exit from the test program when executing this test.

Note: 0 dBm =0.775 V

SW NO.	SWITCH	NOTE	LED	SW NO.	SWITCH	NOTE	LED
S01	DEMO	C3		S12	FUNCTION	B3	
S02	TRANSPOSE	C#3		S13	TEMPO -	C4	
S03	REVERB	D3		S14	TEMPO +	C#4	
S04	TOUCH	D#3		S15	PIANO SONG	D4	
S05	GRAND PIANO	E3		S16	SONG SELECT -	D#4	
S06	E. PIANO	F3		S17	SONG SELECT +	E4	
S07	HARPSICHORD	F#3		S18	RECORDER 1	F4	
S08	STRINGS	G3		S19	RECORDER 2	F#4	
S09	PIPE ORGAN	G#3		S20	START/STOP	G4	
S10	VARIATION	A3		S21	REC	G#4	
S11	METRONOME	A#3					

TABLE 1

INSPECTIONS

1. AUX OUT and PHONES

1-1 Apply a 1 kHz, -20 dBm sine wave to the AUX IN L/L+R and a -∞ dB signal to the AUX R. Confirm that the output meets the following specifications:

AUX OUT L/L+R:-10 dBm +/- 2 dB
PHONES L: -21 dBm +/- 2 dB
AUX OUT R: Less than -60 dBm
PHONES R: Less than -60 dBm

1-2 Apply a 1 kHz, -20 dBm sine wave to the AUX R and a -∞ dB signal to the AUX IN L/L+R. Confirm that the output meets the following specifications:

AUX OUT L/L+R:Less than -60 dBm
PHONES L: Less than -60 dBm
AUX OUT R: -10 dBm +/- 2 dB
PHONES R: -21 dBm +/- 2 dB

2. Noise Level

Confirm that the PHONES L and R output noise level is less than -80 dBm when no sound is produced.

Note: 0 dBm = 0.775 V

MIDI DATA FORMAT

If you're already very familiar with MIDI, or are using a computer to control your music hardware with computer-generated MIDI messages, the data provided in this section can help you to control the YDP-101.

Falls Sie bereits mit MIDI vertraut sind oder einen Computer zur Erzeugung von MIDI-Steuermeldungen für die Instrumente verwenden, können Sie sich zur Steuerung des YDP-101 nach den im folgenden Abschnitt aufgeführten Spezifikationen richten.

Si vous êtes très familier avec l'interface MIDI ou si vous utilisez un ordinateur pour commander votre matériel de musique au moyen de messages MIDI générés par ordinateur, les données suivantes vous seront utiles et vous aideront à commander le YDP-101.

SI usted está ya familiarizado con MIDI, o si emplea una computadora para controlar sus aparatos musicales con mensajes MIDI generados por computadora, los datos proporcionados en esta sección le ayudarán a controlar la YDP-101.

1. NOTE ON/OFF

Data format: [9nH] -> [kk] -> [vv]

9nH = Note ON/OFF event (n = channel number)
kk = Note number (Transmit: 09H ~ 78H = A-2 ~ C8 / Receive: 00H ~ 7FH = C-2 ~ G8)*
vv = Velocity (Key ON = 01H ~ 7FH, Key OFF = 00H)

Data format: [8nH] -> [kk] -> [vv] (reception only)

8nH = Note OFF event (n = channel number)
kk = Note number: 00H ~ 7FH = C-2 ~ G8
vv = Velocity

* If received value exceeds the supported range for the selected voice, the note is adjusted by the necessary number of octaves.

2. CONTROL CHANGE

Data format: [BnH] -> [cc] -> [vv]

BnH = Control change (n = channel number)
cc = Control number
vv = Data Range

(1) Bank Select

ccH	Parameter	Data Range (vvH)
00H	Bank Select MSB	00H:Normal
20H	Bank Select LSB	00H...7FH

Bank selection processing does not occur until receipt of next Program Change message.

(2) Main Volume (reception only)

ccH	Parameter	Data Range (vvH)
07H	Volume MSB	00H...7FH

(3) Expression

ccH	Parameter	Data Range (vvH)
0BH	Expression MSB	00H...7FH

(4) Damper

ccH	Parameter	Data Range (vvH)
40H	Damper MSB	00H...7FH

(5) Sostenuto

ccH	Parameter	Data Range (vvH)
42H	Sostenuto	00H-3FH:off, 40H-7FH:on

(6) Soft Pedal

ccH	Parameter	Data Range (vvH)
43H	Soft Pedal	00H-3FH:off, 40H-7FH:on

(7) Effect1 Depth (Reverb Send Level)

ccH	Parameter	Data Range (vvH)
5BH	Effect1 Depth	00H...7FH

Adjusts the reverb send level.

3 MODE MESSAGES

Data format: [BnH] -> [cc] -> [vv]

BnH = Control event (n = channel number)
cc = Control number
vv = Data Range

(1) All Sound Off

ccH	Parameter	Data Range (vvH)
78H	All Sound Off	00H

Switches off all sound from the channel. Does not reset Note On and Hold On conditions established by Channel Messages.

(2) Reset All Controllers

ccH	Parameter	Data Range (vvH)
79H	Reset All Controllers	00H

Resets controllers as follows.

Controller	Value
Expression	127 (max)
Damper Pedal	0 (off)
Sostenuto	0 (off)
Soft Pedal	0 (off)

(3) Local Control (reception only)

ccH	Parameter	Data Range (vvH)
7AH	Local Control	00H (off), 7FH (on)

(4) All Notes Off

ccH	Parameter	Data Range (vvH)
7BH	All Notes Off	00H

Switches OFF all the notes that are currently ON on the specified channel. Any notes being held by the damper or sostenuto pedal will continue to sound until the pedal is released.

(5) Omni Off (reception only)

ccH	Parameter	Data Range (vvH)
7CH	Omni Off	00H

Same processing as for All Notes Off.

(6) Omni On (reception only)

ccH	Parameter	Data Range (vvH)
7DH	Omni On	00H

Same processing as for All Notes Off.

(7) Mono (reception only)

ccH	Parameter	Data Range (vvH)
7EH	Mono	00H

Same processing as for All Sound Off.

(8) Poly (reception only)

ccH	Parameter	Data Range (vvH)
7FH	Poly	00H

Same processing as for All Sound Off.

- When control change is turned OFF in the Function mode, control change data will not be transmitted or received except for Bank Select and Mode messages.
- Local on/off, OMNI on/off are not transmitted. (The appropriate note off number is supplied with "All Note Off" transmission).
- When a voice bank MSB/LSB is received, the number is stored in the internal buffer regardless of the received order, then the stored value is used to select the appropriate voice when a program change message is received.
- The Multi-timbre and Poly modes are always active. No change occurs when OMNI ON, OMNI OFF, MONO, or POLY mode messages are received.

4. PROGRAM CHANGE

Data format: [CnH] -> [ppH]

CnH = Program event (n = channel number)
ppH = Program change number

P.C.#=Program Change number

	Normal Voice			VARIATION Voice		
	MSB	LSB	P.C.#	MSB	LSB	P.C.#
GRAND PIANO	0	112	0	0	113	0
E.PIANO	0	112	5	0	112	88
HARPSICHORD	0	112	6	0	115	6
STRINGS	0	112	48	0	113	49
PIPE ORGAN	0	112	19	0	113	19

- When program change is turned OFF in the Function mode, no program change data is transmitted or received.
  Also, Bank MSB/LSB is not transmitted or received.

5. SYSTEM REALTIME MESSAGES

[rrH]
F8H: Timing clock
FAH: Start
FCH: Stop
FEH: Active sensing

Data	Transmission	Reception
F8H	Transmitted every 96 clocks	Received as 96-clock tempo timing when MIDI clock is set to External
FAH	Recorder start	Recorder start Not received when the MIDI clock is set to Internal.
FCH	Recorder stop	Recorder stop Not received when the MIDI clock is set to Internal.
FEH	Transmitted every 200 milliseconds	If a signal is not received via MIDI for more than 400 milliseconds, the same processing will take place for All Sound Off, All Notes Off and Reset All Controllers as when those signals are received.

- Caution: If an error occurs during MIDI reception, the Damper, Sostenuto, and Soft effects for all channels are turned off and an All Note Off occurs.

6. SYSTEM EXCLUSIVE MESSAGES (Yamaha MIDI Format)

Panel Data Transmit

Data format: [F0H] -> [43H] -> [0nH] -> [7CH] -> ... -> [F7H]

F0H, 43H, 0nH, 7CH (n: channel number)
00H, 2CH (data length)
43H, 4CH, 20H, 20H (CL)
43H, 4CH, 50H, 27H, 39H, 38H (Model ID)
30H, 30H (version x, y)
[PANEL DATA]
[CHECK SUM (1byte)] = 0-(43H+4CH+20H+.....+Data end)
F7H (end of exclusive)

• Panel Data Contents

(1) 1'st Voice
(2) Dual On/Off
(3) Dual Voice
(4) Dual Balance
(5) Dual Detune
(6) Dual Voice1 Octave
(7) Dual Voice2 Octave
(8) —
(9) —
(10) —
(11) —
(12) —
(13) —
(14) —
(15) —
(16) —
(17) —
(18) —
(19) Reverb Type 1
(20) Reverb Type 2
(21) Reverb Depth1
(22) Reverb Depth2
(23) —
(24) —
(25) —
(26) Variation 1 On/Off
(27) Variation 2 On/Off
(28) Touch Sensitivity
(29) Fixed Data
(30) Left Pedal Function
(31) Absolute tempo low byte
(32) Absolute tempo high byte

- "—" indicates no affect.
- Panel data send requests cannot be received.

7. SYSTEM EXCLUSIVE MESSAGES (Universal System Exclusive)

(1) Universal Realtime Message

Data format: [F0H] -> [7FH] -> [XnH] -> [04H] -> [01H] -> [//H] -> [mmH] -> [F7H]

MIDI Master Volume

- Simultaneously changes the volume of all channels.
- When a MIDI master volume message is received, the volume only has affect on the MIDI receive channel, not the panel master volume.

F0H = Exclusive status
7FH = Universal Realtime
7FH = ID of target device
04H = Sub-ID #1=Device Control Message
01H = Sub-ID #2=Master Volume
//H = Volume LSB
mmH = Volume MSB
F7H = End of Exclusive

or

F0H = Exclusive status
7FH = Universal Realtime
XnH = When n is received n=0~F, whichever is received.
X = don't care
04H = Sub-ID #1=Device Control Message
01H = Sub-ID #2=Master Volume
//H = Volume LSB
mmH = Volume MSB
F7H = End of Exclusive

(2) Universal Non-Realtime Message (GM On)

General MIDI Mode On

Data format: [F0H] -> [7EH] -> [XnH] -> [09H] -> [01H] -> [F7H]

F0H = Exclusive status
7EH = Universal Non-Realtime
7FH = ID of target device
09H = Sub-ID #1=General MIDI Message
01H = Sub-ID #2=General MIDI On
F7H = End of Exclusive

or

F0H = Exclusive status
7EH = Universal Non-Realtime
XnH = When received, n=0~F.
X = don't care
09H = Sub-ID #1=General MIDI Message
01H = Sub-ID #2=General MIDI On
F7H = End of Exclusive

When the General MIDI mode ON message is received, the MIDI system will be reset to its default settings.
This message requires approximately 50ms to execute, so sufficient time should be allowed before the next message is sent.

8. SYSTEM EXCLUSIVE MESSAGES (XG Standard)

(1) XG Native Parameter Change

Data format: [F0H] -> [43H] -> [1nH] -> [4CH] -> [hhH] -> [mmH] -> [llH] -> [ddH] -> [F7H]

F0H = Exclusive status
43H = YAMAHA ID
1nH = When received, n=0~F.
When transmitted, n=0.
4CH = Model ID of XG
hhH = Address High
mmH = Address Mid
llH = Address Low
ddH = Data
|
F7H = End of Exclusive

Data size must match parameter size (2 or 4 bytes).
When the XG System On message is received, the MIDI system will be reset to its default settings.
The message requires approximately 50ms to execute, so sufficient time should be allowed before the next message is sent.

(2) XG Native Bulk Data (reception only)

Data format: [F0H] -> [43H] -> [0nH] -> [4CH] -> [aaH] -> [bbH] -> [hhH] -> [mmH] -> [llH] -> [ddH] ->...-> [ccH] -> [F7H]

F0H Exclusive status
43H YAMAHA ID
0nH When received, n=0~F.
When transmitted, n=0.
4CH Model ID of XG
aaH ByteCount
bbH ByteCount
hhH Address High
mmH Address Mid
llH Address Low
ddH Data
| |
| |
ccH Check sum
F7H End of Exclusive

- Receipt of the XG SYSTEM ON message causes reinitialization of relevant parameters and Control Change values. Allow sufficient time for processing to execute (about 50 msec) before sending the YDP-101 another message.
- XG Native Parameter Change message may contain two or four bytes of parameter data (depending on the parameter size).
- For information about the Address and Byte Count values, refer to Table 1 below. Note that the table's Total Size value gives the size of a bulk block. Only the top address of the block (00H, 00H, 00H) is valid as a bulk data address.

9. SYSTEM EXCLUSIVE MESSAGES (YDP-101 MIDI Format)

Data format: [F0H] -> [43H] -> [73H] -> [xxH] -> [nnH] -> [F7H]

F0H = Exclusive status
43H = Yamaha ID
73H = YDP ID
5FH = Product ID
nnH = Substatus
nn Control
02H Internal MIDI clock
03H External MIDI clock
06H Bulk Data (the bulk data follows 06H)
F7H = End of Exclusive

* When nn=02H or 03H, YDP common ID (01H) is recognized as well as 5FH.

BULK DUMP FORMAT

F0H, 43H, 73H
5FH =Product ID
06H =Bulk ID
05H =Sequence data
0nH, 0nH, 0nH, 0nH, 0nH, 0nH, 0nH =Data length
[BULK DATA] =
[CHECK SUM (1byte)] = 0-sum (BULK DATA)
F7H = End of Exclusive

10. SYSTEM EXCLUSIVE MESSAGES (Special Control)

Data format: [F0H] -> [43H] -> [73H] -> [xxH] -> [11H] -> [0nH] -> [ccH] -> [vvH] -> [F7H]

F0H = Exclusive status
43H = Yamaha ID
73H = YDP ID
5FH = Product ID
11H = Special control
0nH = Control MIDI change (n=channel number)
cc = Control number
vv = Value
F7H = End of Exclusive

Control	0n	ccH	vvH
Metronome	Always 00H	1BH	00H : off 01H : – 02H : 2/4 03H : 3/4 04H : 4/4 06H : 6/4 7FH : No accent
Channel Detune	ch: 00H-0FH	43H	(Sets the Detune value for each channel) 00H-7FH
Voice Reserve	ch: 00H-0FH	45H	00H : Reserve off 7FH : on*

* When Volume, Expression is received for Reserve On, they will be effective from the next Key On. Reserve Off is normal.

11. SYSTEM EXCLUSIVE MESSAGES (Others)

Data format: [F0H] -> [43H] -> [1nH] -> [27H] -> [30H] -> [00H] -> [00H] -> [mmH] -> [llH] -> [ccH] -> [F7H]

Master Tuning (XG and last message priority) simultaneously changes the pitch of all channels.

F0H = Exclusive Status
43H = Yamaha ID
1nH = Transmission from n=YDP-101 is always 0.
0-F is received.
27H = Model ID of TG100
30H = Sub ID
00H =
00H =
mmH = Master Tune MSB
llH = Master Tune LSB
ccH = don't care (under 7FH)
F7H = End of Exclusive

<Table 1>

MIDI Parameter Change table (SYSTEM)

Address (H)	Size (H)	Data (H)	Parameter	Description	Default value (H)
00 00 00	4	020C - 05F4(*1)	MASTER TUNE	-50 - +50[cent]	00 04 00 00
01				1st bit 3 - 0 Æ bit 15 - 12	400
02				2nd bit 3 - 0 Æ bit 11 - 8	
03				3rd bit 3 - 0 Æ bit 7 - 4	
				4th bit 3 - 0 Æ bit 3 - 0	
04	1	00 - 7F	MASTER VOLUME	0 - 127	7F
05	1	—	—		
06	1	34 - 4C(*2)	TRANSPOSE	-12 - +12[semitones]	40
7E		00	XG SYSTEM ON	00=XG sytem ON	
7F		00	RESET ALL PARAMETERS	00=ON (receive only)	
TOTAL SIZE	07				

*1: Values lower than 020CH select -50 cents. Values higher than 05F4H select +50 cents.
*2: Values from 28H through 33H are interpreted as -12 through -1. Values from 4DH through 58H are interpreted as +1 through +12.

<Table 2>

MIDI Parameter Change table (EFFECT 1)

Refer to the “Effect MIDI Map” for a complete list of Reverb type numbers.

Address (H)	Size (H)	Data (H)	Parameter	Description	Default value (H)
02 01 00	2	00-7F	REVERB TYPE MSB	Refer to Effect MIDI Map	01(=HALL1)
		00-7F	REVERB TYPE LSB	00 : basic type	00

● Effect MIDI Map

REVERB

	MSB	LSB
ROOM	02H	10H
HALL 1	01H	10H
HALL 2	01H	11H
STAGE	03H	10H

Function ...		Transmitted	Recognized	Remarks
Basic Channel	Default Changed	1 1 - 16	1 1 - 16	
Mode	Default Messages Altered	3 x **********	1 *1 x x	Poly Mode Only
Note Number	: True voice	9 - 120 **********	0 - 127 21 - 108	
Velocity	Note ON Note OFF	o 9nH, v=1 - 127 x 9nH, v=0	o v=1 - 127 x	
After Touch	Key's Ch's	x x	x x	
Pitch Bend		x	x	
Control Change	0, 32 7 11 64 66 67 91 120 121	o x x o o o o x x	o o o o o o o o o	Bank Select Volume Expression Damper Sostenuto Soft Pedal Reverb Depth All Sound Off Reset All Controllers
Prog Change	: True #	o **********	o	
System Exclusive		o	o	
System Common	: Song Pos. : Song Sel. : Tune	x x x	x x x	
System Real Time	: Clock : Commands	o o	o o	
Aux Mes- sages	: Local ON/OFF : All Notes OFF : Active Sense : Reset	x o o x	o o (123 - 127) o x	

Notes: *1 = Receive Mode is always multi timbre and Poly mode.

Mode 1 : OMNI ON, POLY
Mode 2 : OMNI ON, MONO
o : Yes
Mode 3 : OMNI OFF, POLY
Mode 4 : OMNI OFF, MONO
x : No

DIGITAL PIANO
YDP-101/S
PARTS LIST

■ **CONTENTS**

OVERALL ASSEMBLY 2
STAND ASSEMBLY 2
MAIN UNIT 4
MAIN BOX ASSEMBLY 6
SIDE BOARD & STAND BASE ASSEMBLY (L,R) 8
PEDAL BOX ASSEMBLY 9
PEDAL ASSEMBLY 10
TOP BOARD & MUSIC REST ASSEMBLY
TOP BOARD ASSEMBLY
MUSIC REST ASSEMBLY 11
END BLOCK ASSEMBLY (L,R) 12
CONTROL PANEL ASSEMBLY 13
KEY COVER ASSEMBLY 14
POWER SUPPLY UNIT 15
KEYBOARD ASSEMBLY 16
KEYBOARD SUB ASSEMBLY 18
BENCH 19
ELECTRICAL PARTS 20

Note) DESTINATION ABBREVIATIONS

J : Japanese model	A : Australian model
U : U.S. model	E : European model
C : Canadian model	D : German model
X : General model	B : British model
M : South African model	I : Indonesian model
H : North European model	N : Export model

■ WARNING

Components having special characteristics are marked ⚠ and must be replaced with parts having specifications equal to those originally installed.

- The numbers in “QTY” shows quantities for each unit.
- The parts with “– –” in “Part No.” are not available as spare parts.
- This mark “}” in the REMARKS column means these parts are interchangeable.

■ OVERALL ASSEMBLY

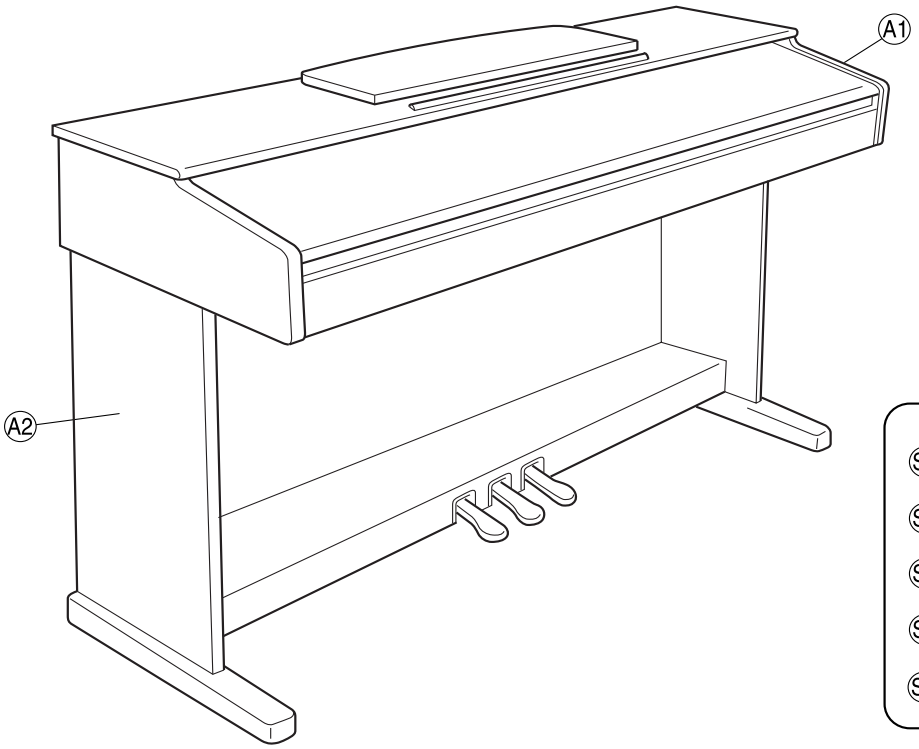

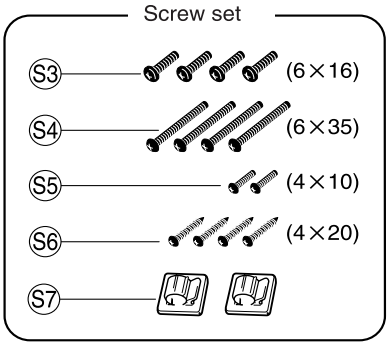

■ STAND ASSEMBLY

• Top view

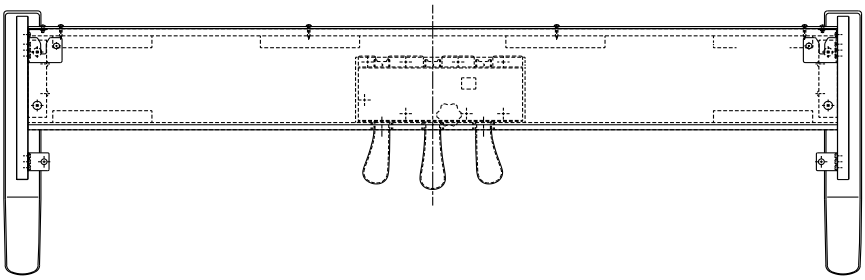

• Front view

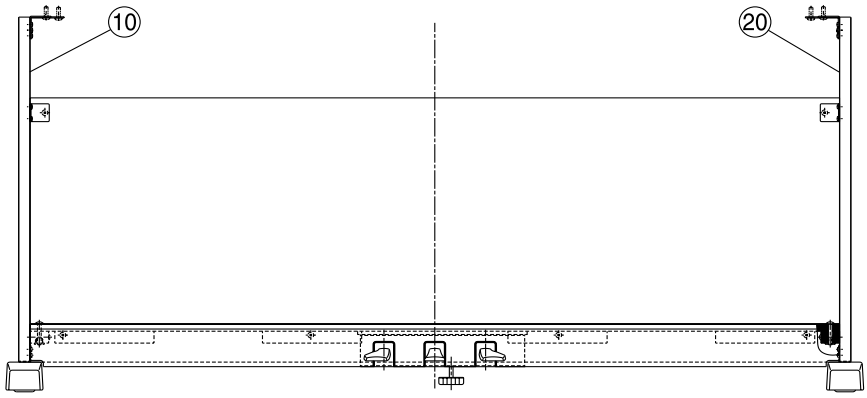

• Side view

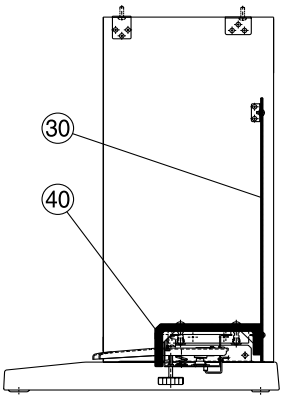

	REF NO.	PART NO.	DESCRIPTION			REMARKS	QTY	RANK
			OVERALL ASSEMBLY			YDP101,S		
	A1	--	Main Unit	J		J (V306130)		
	A1	--	Main Unit	E		E (V306140)		
	A1	--	Main Unit	N		N (V306150)		
	A1	--	Main Unit	U		U YDP101S (V364240)		
	A2	--	Stand Assembly			(V306170)		
		--	Stand Assembly			(V306170)		
	10	--	Side Board Assembly	LEFT		(V308470)		
	20	--	Side Board Assembly	RIGHT		(V308480)		
*	30	**VV280100**	Back Board					
	40	--	Pedal Box Assembly			(V308490)		
			ACCESSORIES					
		--	Bench	CL BC-X J		(VV44340)		
		VT044200	Headphone	P402416N2410				09
⚠		**VT015700**	AC Cord Set	J 2 2.5M 7A		J		05
⚠	*	**V2916900**	AC Cord Set	J 2 7A 2.5M		J		
⚠	*	**V3126200**	AC Cord Set	J 2 2.5M 7A		J		
⚠		**VT015800**	AC Cord Set	U 2 2.44M 7A		U YDP101S		
⚠		**VT015900**	AC Cord Set	E 2 2.5M		E,N		05
⚠	*	**V2917100**	AC Cord Set	E 2 2.5M 2.5A		E,N		
⚠	*	**V3126300**	AC Cord Set	E 2 2.5M		E,N		
		VK726100	Connector	CCT5902		N		03
*		**V3154900**	Screw Set					
		VZ176100	UL Back Too Set			YDP101S		
*		**V3154900**	Screw Set					
	S3	**EG360020**	Bind Head Screw	6.0X16 MFZN2BL			4	01
	S4	**VS880300**	Truss Head Screw	6.0X35 MFZN2BL			4	
	S5	**VT196400**	Truss Head Screw	4.0X10 MFZN2BL			2	01
	S6	**VR321000**	PW Head Tapping Screw-1	4.0X20 MFZN2BL			4	01
	S7	**VR410300**	Cord Clamp Set					03
	S7a	**VP592100**	Cord Clamp	DKN-5B (VHB)			2	03

***New parts** **RANK:Japan only**

	REF NO.	PART NO.	DESCRIPTION			REMARKS		QTY	RANK
			MAIN UNIT			YDP101,S			
		--	Main Unit	J		J	(V306130)		
		--	Main Unit	E		E	(V306140)		
		--	Main Unit	N		N	(V306150)		
		--	Main Unit	U		U YDP101S	(V364240)		
		--	Main Unit Sub-assembly				(V306160)		
		--	Main Unit Sub-assembly			U YDP101S	(V375080)		
	M240	--	Name Plate	J		J	(V308430)		
	M240	--	Name Plate	J		J	(V314660)		
	M240	--	Name Plate	E		E	(V308440)		
	M240	--	Name Plate	N		N	(V308460)		
	M240	--	Name Plate	U		U YDP101S	(V364290)		
	M260	**VB951400**	Graphic Mark	UL		U YDP101S			
	M330	**EP030340**	Bind Head Tapping Screw-1	3.5X12 MFZN2BL		U YDP101S			01
	M420	**EN630230**	Truss Head Tapping Screw-1	3.5X14 MFZN2Y		U YDP101S			01
⚠	M560	**V0010200**	Power Supply Unit			J			
⚠	M560	**V0010300**	Power Supply Unit			U YDP101S			14
⚠	M560	**V0010400**	Power Supply Unit			E			14
⚠	M560	**V0010500**	Power Supply Unit			N			
	M640	**V2035900**	Power Supply Cover			U YDP101S			07
		--	Main Unit Sub-assembly				(V306160)		
		--	Main Unit Sub-assembly			U YDP101S	(V375080)		
*	1	**V3674800**	Main Box Assembly						
	10	--	T.Board & M.Rest Assembly			YDP101	(V308310)		
	10	--	T.Board & M.Rest Assembly			U YDP101S	(V366320)		
	50	--	End Block Assembly				(VV60330)		
	60	**V0052400**	End Block Assembly						
	100	--	keyboard Sub Assembly				(VV54370)		
	110	--	Control Panel Assembly			YDP101	(V308100)		
	110	--	Control Panel Assembly			U YDP101S	(V369260)		
*	120	**V3083200**	Key Cover Assembly						
	130	**VS312100**	Rack Cover						03
	150	**VV284300**	Holder, Panel						05
	160	--	Dust Proof Cloth	15X15X0.9			(VZ08590)	2	
	220	**VZ957700**	Holder, M Circuit Board						06
	230	--	Holder, PCB				(V309210)		
	250	--	Label, PHONES				(VS47810)		
	330	**EP030340**	Bind Head Tapping Screw-1	3.5X12 MFZN2BL				20	01
*	360	**03747290**	Truss Head Tapping Screw-1	4.0X20 MFZN2BL				8	
	370	**EP600240**	Bind Head Tapping Screw-B	4.0X10 MFZN2BL				4	01
	380	**VT085900**	Bind Head Tapping Screw-S	PW 4.0X20 MFZN2BL				8	01
	390	**EP600190**	Bind Head Tapping Screw-B	3.0X8 MFZN2BL				17	01
	410	**VB934000**	Truss Head Screw	4.0X20 MFZN2BL				3	01
	420	**EN630230**	Truss Head Tapping Screw	3.5X14 MFZN2Y					01
	490	**VN887900**	Guide Screw	6X14				2	03
	520	--	HP Jack Assembly				(V202090)		
	520a	**V2021000**	Circuit Board	HP					
	520b	**VN631800**	Holder, Phone Jack						04
	520c	**VB508600**	Hexagonal Nut	12.0 14X2 MFZN2BL				2	01
	530	**XS419A00**	Speaker	16.0cm 4ohm 20W				2	08
	540	--	M Circuit Board Assembly				(V309880)		
*	540a	**V3066300**	Circuit Board	M					
*	540b	**V3066400**	Circuit Board	DM					
	550	--	Jack Plate				(V308630)		
*	570	**V3067200**	Circuit Board	KSN2					
	580	--	Connector Assembly	POWER			(V004510)		
	590	--	Connector Assembly	SP			(V004520)		
	600	--	Connector Assembly	HP			(V220540)		
	610	--	Connector Assembly	MK-LF			(V352610)		
	620	--	Connector Assembly	2P-150			(VK09960)		
	630	--	Dust Proof Cloth	22X10X0.35			(V257670)	2	

***New parts** **RANK:Japan only**

■ MAIN UNIT

• Rear view

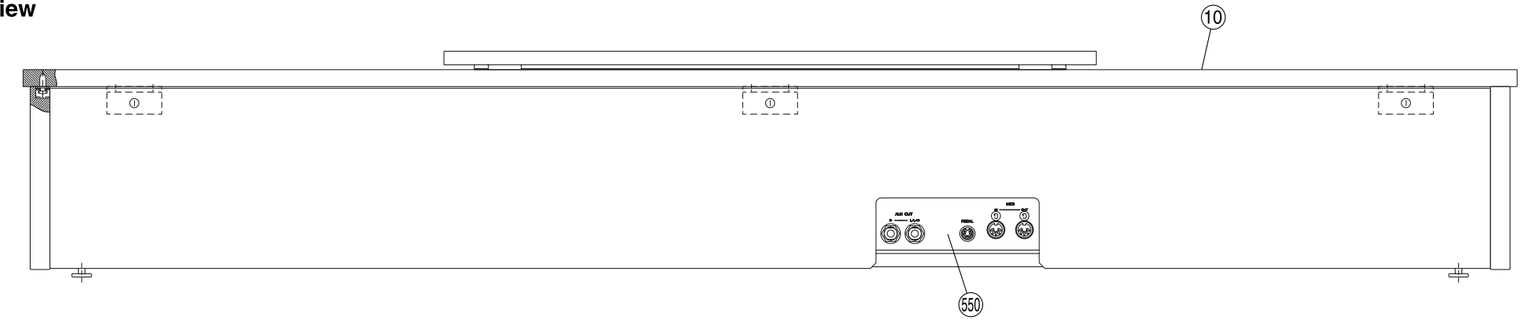

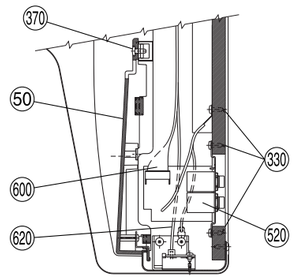

• Top view

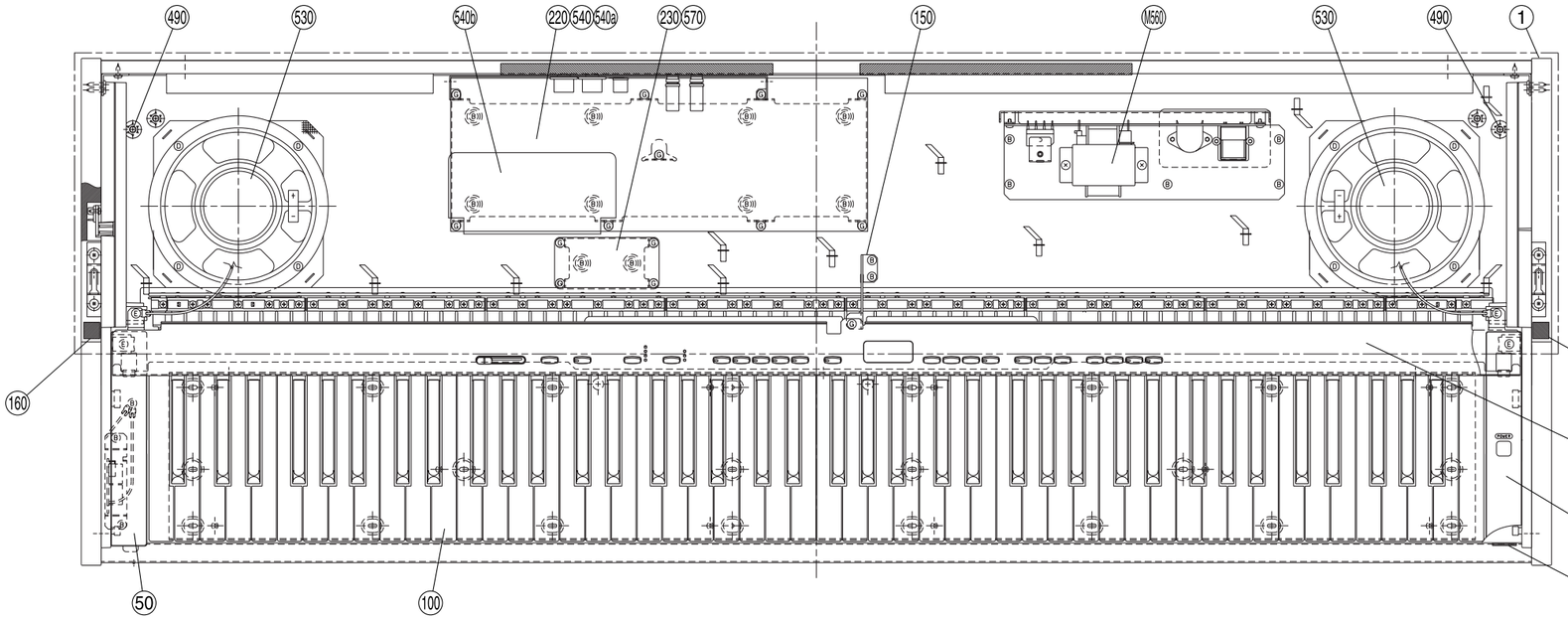

• Side view

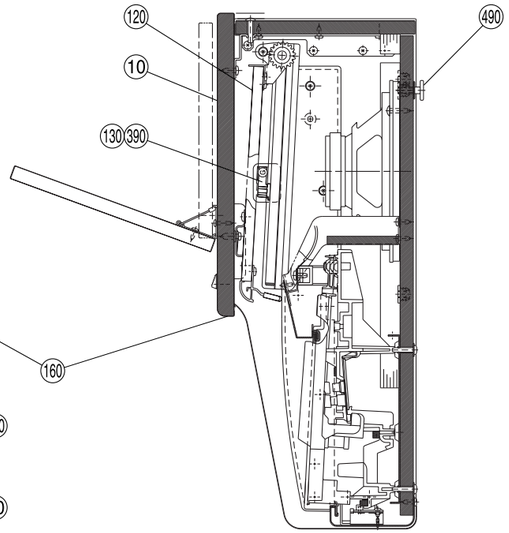

• Bottom view

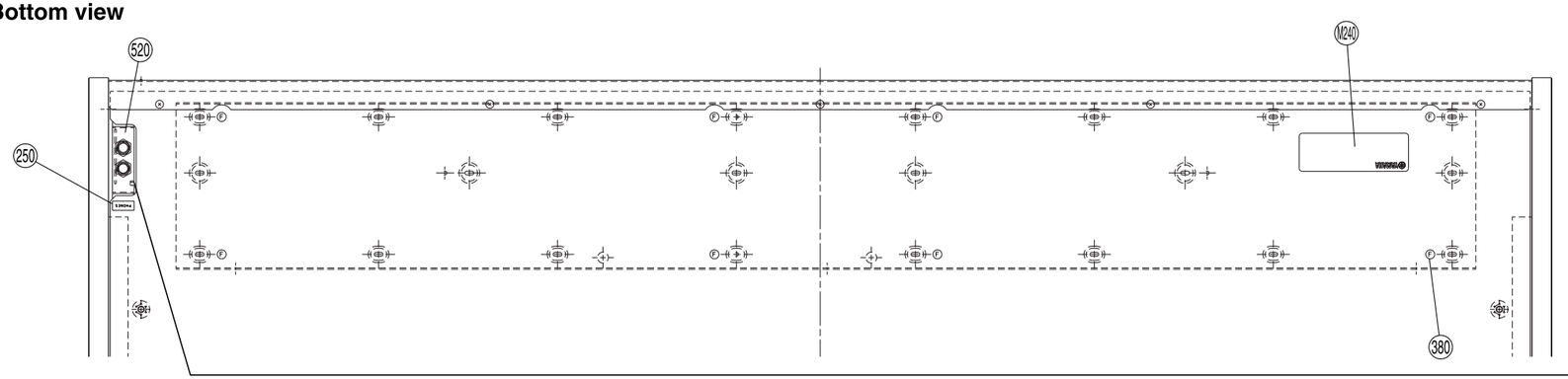

520 HP Jack Assembly

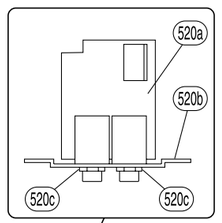

SCREW	REF NO.	PART NO.
Ⓑ	330	EP030340
Ⓓ	360	03747290
Ⓔ	370	EP600240
Ⓕ	380	VT085900
Ⓖ	390	EP600190
Ⓘ	410	VB934000

■ MAIN BOX ASSEMBLY

• **Rear view**

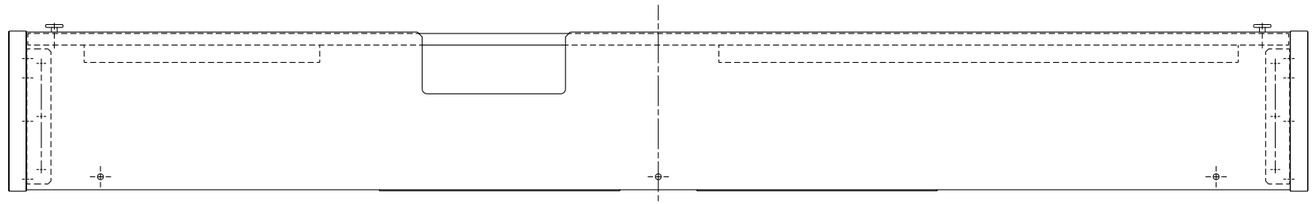

• **Top view**

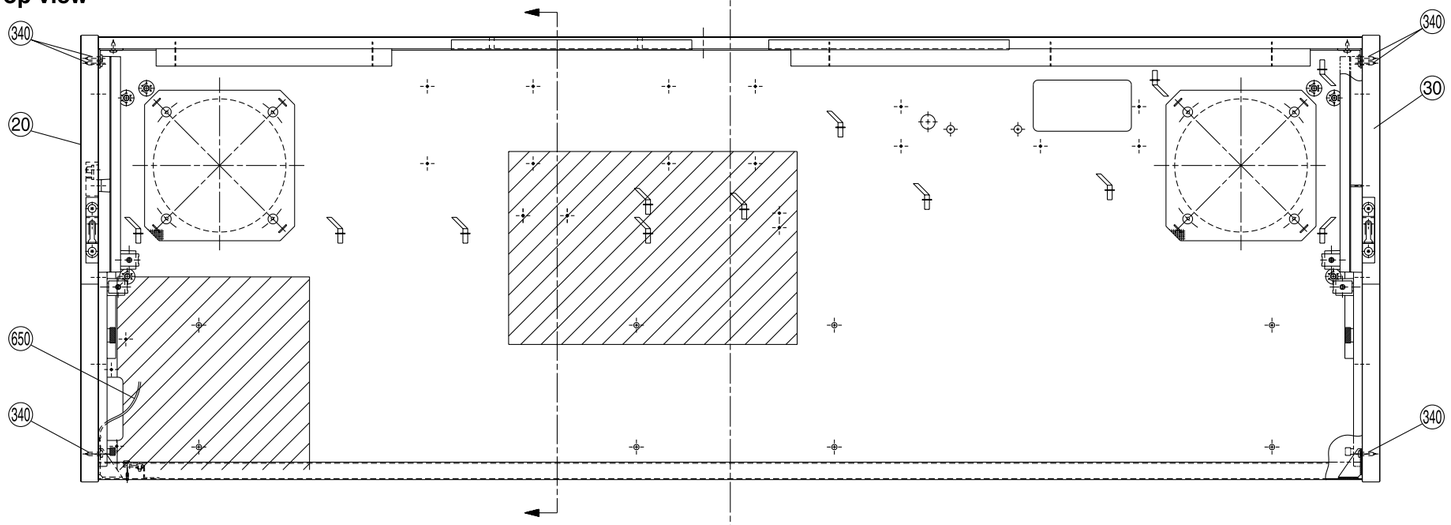

• **Side view**

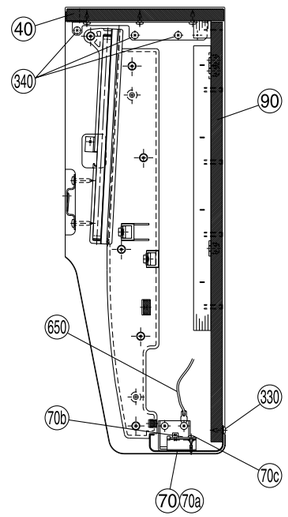

• **Bottom view**

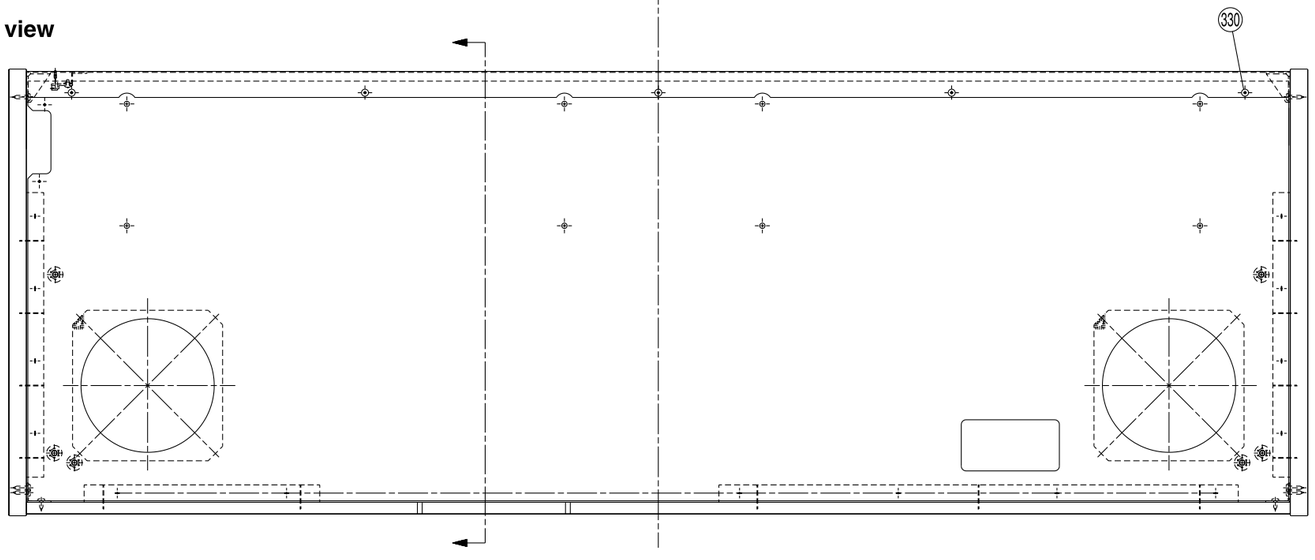

	REF NO.	PART NO.	DESCRIPTION			REMARKS	QTY	RANK
*		**V367480**	Main Box Assembly			YDP101,S		
	20	**--**	Side Cover Assembly	LEFT		(V308580)		
	30	**--**	Side Cover Assembly	RIGHT		(V308590)		
	40	**--**	Back Top Board Assembly			(V306220)		
	70	**--**	Front Rail Assembly			(V309050)		
*	70a	**V3090600**	Front Rail					
	70b	**VN637600**	Circuit Board	PL				05
	70c	**EP630230**	Bind Head Tapping Screw-B	3.0X6 MFZN2BL				01
	90	**--**	Keybed Assembly			(V306180)		
	330	**EP030340**	Bind Head Tapping Screw-1	3.5X12 MFZN2BL			5	01
	340	**EP030260**	Bind Head Tapping Screw-1	3.5X16 MFZN2BL			10	01
	650	**--**	GND Wire	L=150		YDP101S (VH87160)		

***New parts** **RANK:Japan only**

■ SIDE BOARD & STAND BASE ASSEMBLY (L,R)

* This figure shows a side board & stand base assembly (L).

• **Top view**

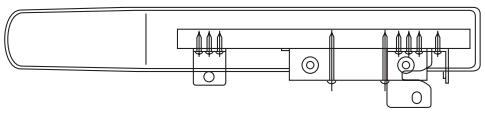

• **Front view**

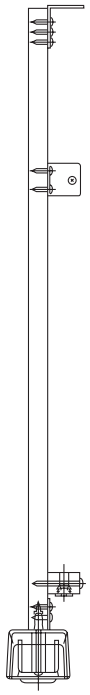

• **Side view**

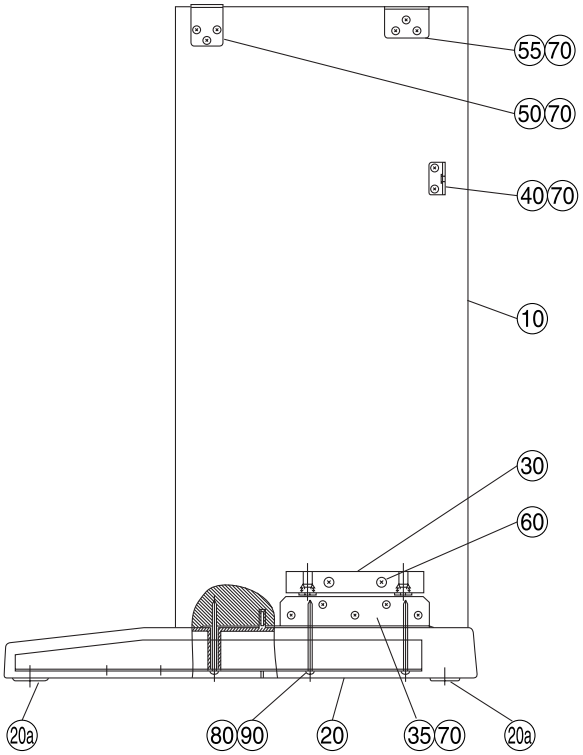

	REF NO.	PART NO.	DESCRIPTION			REMARKS	QTY	RANK
			SIDE BOARD & STAND BASE			YDP101,S		
		--	Side Board & Stand Base L			(V308470)		
		--	Side Board & Stand Base R			(V308480)		
*	10	V3085500	Side Board					
*	10	V3085600	Side Board					
*	20	V3316300	Stand Base Assembly	BR			2	
	20a	VI235200	Foot				4	01
	30	--	Pedal Box Stopper			(VZ18000)	2	
	35	VY824800	Angle	LEFT				03
	35	VY824900	Angle	RIGHT				03
	40	VQ958300	Holder, Back Board				2	05
	50	VN973100	Angle Bracket, ST				2	04
	55	VS295500	ST Holder	LEFT				05
	55	VS295600	ST Holder	RIGHT				05
	60	VQ488900	Truss Head Tapping Screw-1	4.0X45 MFZN2Y			4	01
	70	EP030260	Bind Head Tapping Screw-1	3.5X16 MFZN2BL			26	01
	80	VV444000	Pan head Tapping Screw-1	4.0X65 MFZN2Y			6	
	90	03765410	Flat Washer	4.0X10X0.8 MFZN2Y			6	01

***New parts** **RANK:Japan only**

PEDAL BOX ASSEMBLY

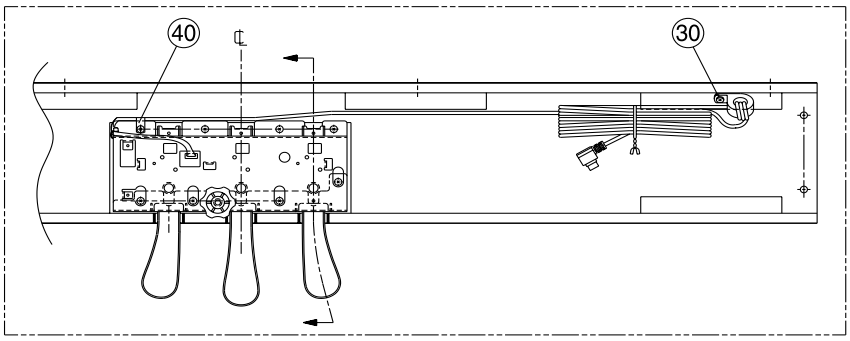

• Bottom view

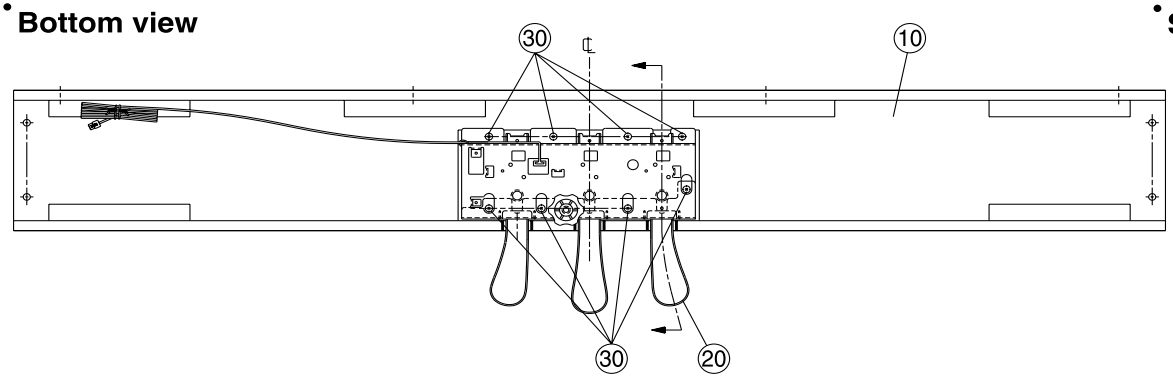

• Side view

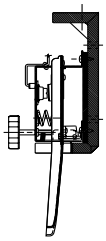

• Front view

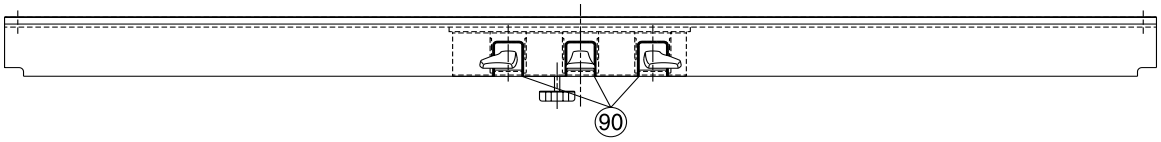

REF NO.	PART NO.	DESCRIPTION			REMARKS	QTY	RANK
		PEDAL BOX ASSEMBLY			YDP101,S		
	--	Pedal Box Assembly			(V308490)		
* 10	V3085700	Pedal Box					
20	V0053700	Pedal Assembly					
30	EP040230	Bind Head Tapping Screw-1	4.0X14 MFZN2Y			9	01
40	CB065520	Nylon Clamp	NK-3N				01
90	VU464300	Felt	115X12X2 RE			3	03

*New parts

RANK:Japan only

■ PEDAL ASSEMBLY

• Top view

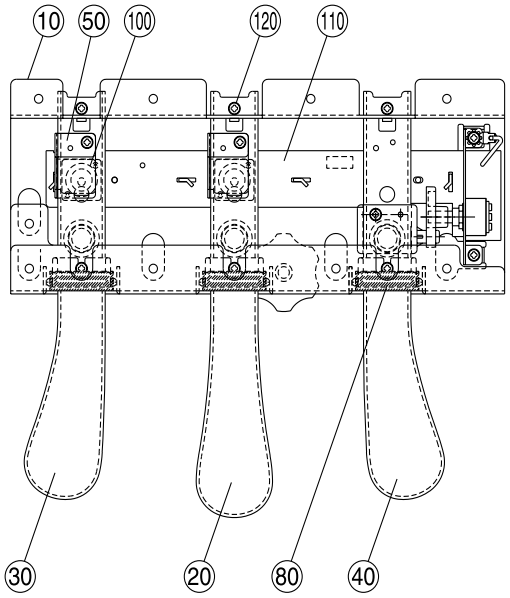

• Side view

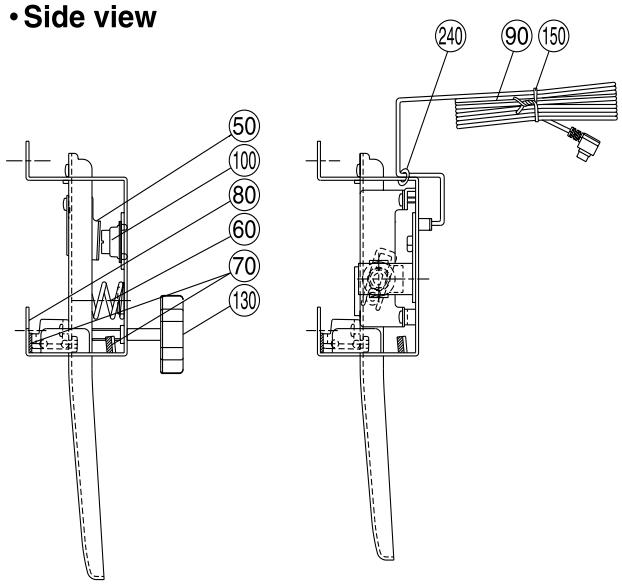

REF NO.	PART NO.	DESCRIPTION			REMARKS	QTY	RANK
		PEDAL ASSEMBLY			YDP101,S		
	V0053700	Pedal Assembly					
10	--	Pedal Frame			(VU33970)		09
20	**VU362000**	Pedal Piece					08
30	**VU362100**	Pedal Piece					08
40	**VU362200**	Pedal Piece					08
50	**VV433500**	Actuator	PEDAL			3	03
60	**VP348100**	Pedal Spring	CLP-124			3	03
70	**VU346500**	Felt	BL			6	03
80	**VU339800**	Shutter	PEDAL			3	03
90	**V0044700**	Connector Assembly	PK				10
100	**VU456000**	Rubber Contact	1 PEDAL			3	03
110	**V2337300**	Circuit Board	PEDAL				07
120	**EP600190**	Bind Head Tapping Screw-B	3.0X8 MFZN2BL			10	01
130	**VU379700**	Adjuster					02
140	--	Grease	G-31KA		(VE96850)		
150	**CB033610**	Cord Binder	L=160				01
240	**CB069250**	Cord Holder	BK-1				01

***New parts** **RANK:Japan only**

■ TOP BOARD ASSEMBLY & MUSIC REST ASSEMBLY

• Top view

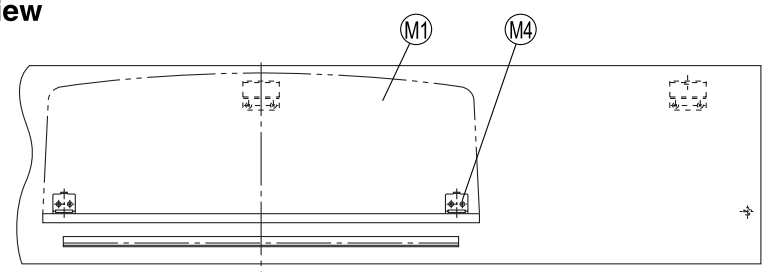

• Side view

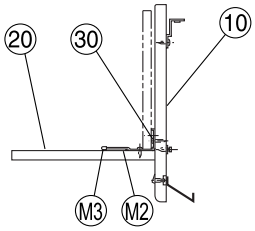

■ TOP BOARD ASSEMBLY

• Rear view

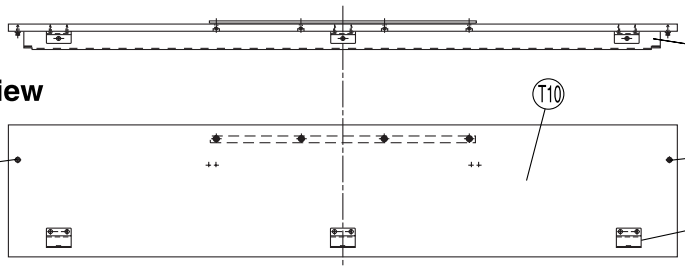

• Side view

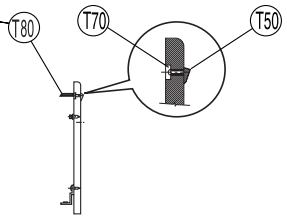

• Bottom view

(T80) is not used to YDP101.
(T80) is only used to YDP101S.

TOP BOARD ASSEMBLY & MUSIC REST ASSEMBLY

	REF NO.	PART NO.	DESCRIPTION			REMARKS	QTY	RANK
			T.BOARD & M.REST ASSEMBLY			YDP101,S		
		--	T.Board & M.Rest Assembly			YDP101 (V308310)		
		--	T.Board & M.Rest Assembly			YDP101S		
*	10	V3086100	Top Board Assembly			YDP101		
	10	V3663300	Top Board Assembly			YDP101S		
*	20	V3086000	Music Rest Assembly					
	30	EP030310	Bind Head Tapping Screw-1	3.0X16 MFZN2BL			4	01

*New parts RANK:Japan only

TOP BOARD ASSEMBLY

	REF NO.	PART NO.	DESCRIPTION			REMARKS	QTY	RANK
*		V3086100	Top Board Assembly			YDP101,S		
	T10	--	Top Board			YDP101 (V308690)		
	T30	VV444100	Screw				2	03
	T40	VQ485800	Holder, Top Board	R			3	05
*	T50	V2780400	Stopper Rail, Music Score					
	T60	EP040230	Bind Head Tapping Screw-1	4.0X14 MFZN2Y			6	01
	T70	VZ179200	PW Head Screw	2.2X5.8 MFZN2Y			4	01
	T80	--	Top Board Apron Assembly			YDP101S		
	T90	EP030340	Bind Head Tapping Screw-1	3.5X12 MFZN2BL		YDP101S		
	T100	--	Tape	T200 25X20M		YDP101S		

*New parts RANK:Japan only

MUSIC REST ASSEMBLY

	REF NO.	PART NO.	DESCRIPTION			REMARKS	QTY	RANK
*		V3086000	Music Rest Assembly			YDP101,S		
	M1	--	Music Rest			(V308700)		
	M2	VD255900	Hinge				2	07
	M3	CB054920	Cap	BL			2	01
*	M4	20404200	Bind Head Tapping Screw-1	3.0X10 MFZN2BL			4	

*New parts RANK:Japan only

■ END BLOCK ASSEMBLY (L,R)

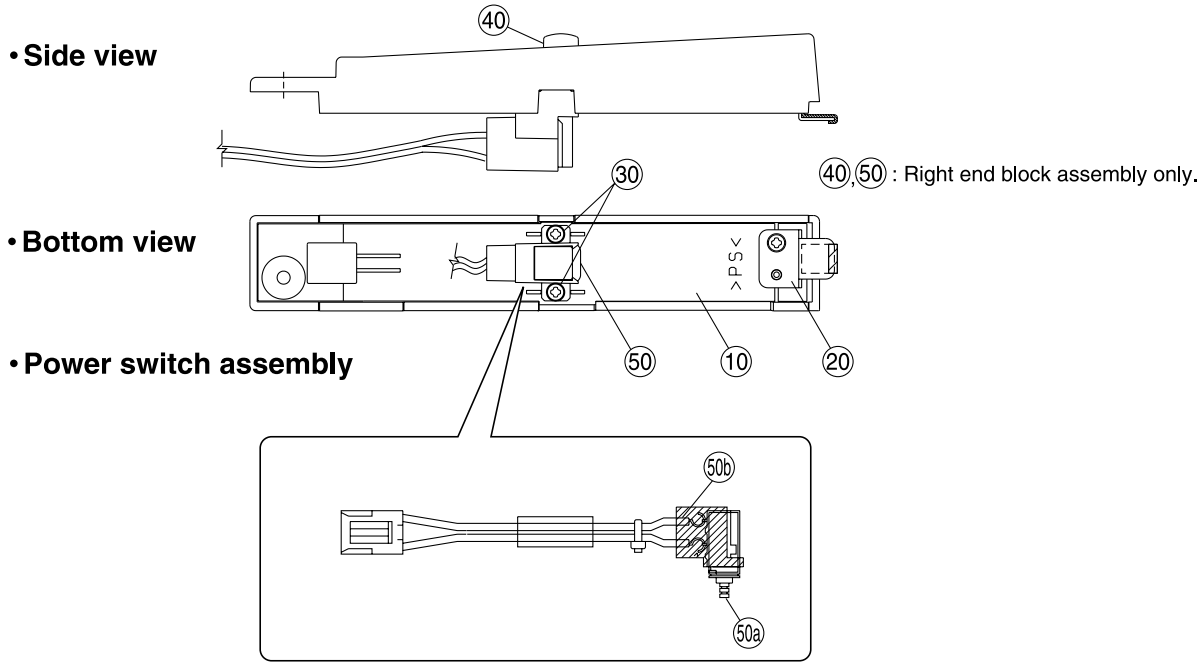

END BLOCK ASSEMBLY (L)

REF NO.	PART NO.	DESCRIPTION			REMARKS	QTY	RANK
	--	End Block Assembly	LEFT		YDP101,S (VV60330)		
10	**VV599700**	End Block	LEFT				06
20	**VL732000**	Holder Assembly					04
30	**EP600190**	Bind Head Tapping Screw-B	3.0X8 MFZN2BL				01

***New parts** **RANK:Japan only**

END BLOCK ASSEMBLY (R)

REF NO.	PART NO.	DESCRIPTION			REMARKS	QTY	RANK
	V0052400	End Block Assembly	RIGHT		YDP101,S		
10	**VV599600**	End Block	RIGHT				06
20	**VL732000**	Holder Assembly					04
30	**EP600190**	Bind Head Tapping Screw-B	3.0X8 MFZN2BL			3	01
40	**VF663400**	Knob	BL				02
50	**VS353700**	Power Switch Assembly					08
50a	**VC843500**	Push Switch	SDDLB1216A J.U.C.S				03
50b	**CB049980**	Switch Cover	BL				01

***New parts** **RANK:Japan only**

■ CONTROL PANEL ASSEMBLY

• **Bottom view**

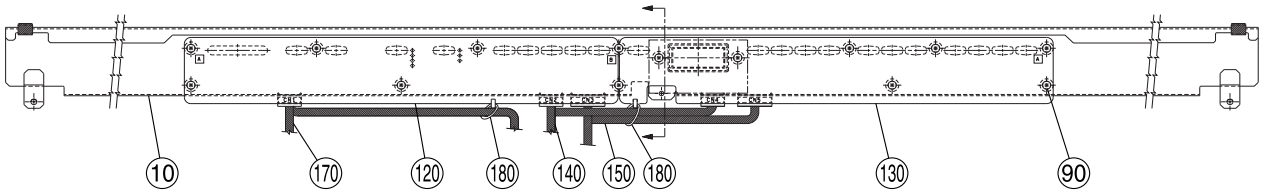

• **Side view**



• **Top view**

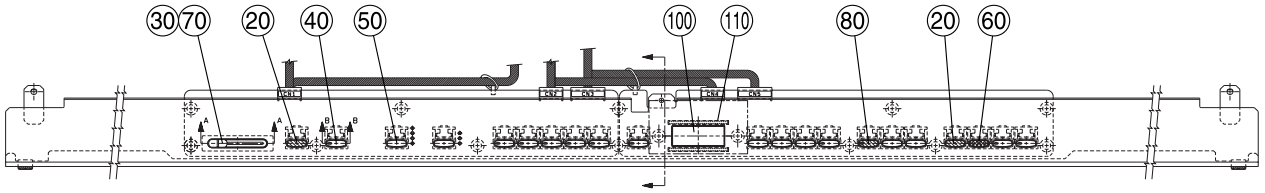

• **Side view**



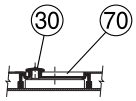

	REF NO.	PART NO.	DESCRIPTION			REMARKS		QTY	RANK
			CONTROL PANEL ASSEMBLY			YDP101,S			
		--	Control Panel Assembly			YDP101S			
		--	Control Panel Assembly			YDP101	(V308100)		
*	10	**V3081400**	Control Panel						
	20	**VS513300**	Knob	GY				2	03
	30	**VS179900**	Slide Knob						03
	40	**VS180000**	Knob with Lens					10	03
	50	**VS180100**	Knob					7	03
	60	**VS311000**	Knob with Lens	RE					03
	70	**VK323500**	Escutcheon						05
	80	**VS311100**	Knob with Lens	GY					03
	90	**EP600230**	Bind Head Tapping Screw-B	3.0X6 MFZN2BL				14	01
	100	**VP889000**	Temp Housing						04
*	110	**V3237200**	Cushion	45X3XT2				2	
*	120	**V3091200**	Circuit Board	PNL J					
*	130	**V3091300**	Circuit Board	PNR J					
	140	--	Connector Assembly	KRD-KRD-KRD 8P		YDP101	(V309860)		
	140	--	Connector Assembly	PN-LF		YDP101S	(V368090)		
	150	--	Connector assembly	KRD-KRD-KRD 12P		YDP101	(V309870)		
	160	--	Felt	16X12X1			(V345580)	2	
	170	--	Connector Assembly	VOL L=400			(V222620)		
	180	**CB069250**	Cord Holder	BK-1				2	01

***New parts** **RANK:Japan only**

KEY COVER ASSEMBLY

• **Bottom view**

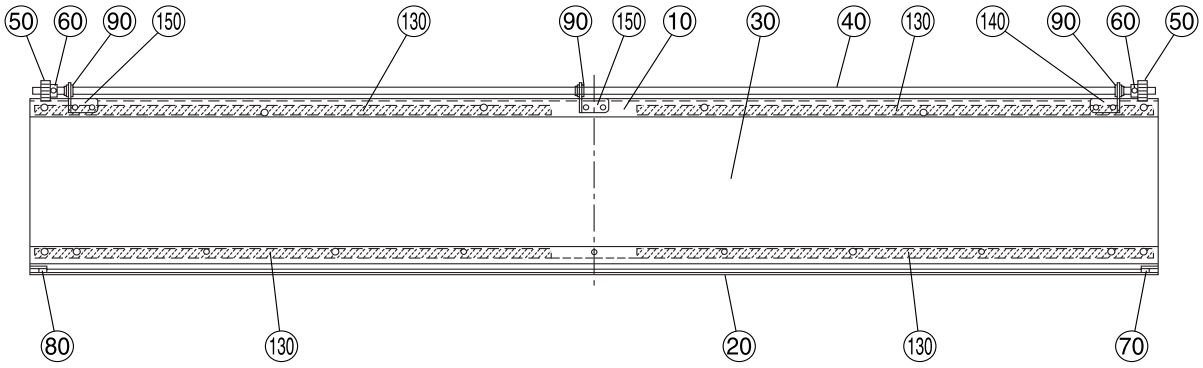

• **Side view**

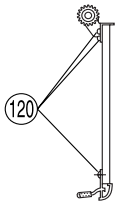

	REF NO.	PART NO.	DESCRIPTION			REMARKS	QTY	RANK
			KEY COVER ASSEMBLY			YDP101		
*		**V3083200**	Key Cover Assembly					
	10	**VV285500**	Sash					08
	20	**VV285800**	Sash					12
	30	**--**	Slide Cover			(V308620)		
	40	**VU257800**	Rod					09
	50	**VT190400**	Gear				2	03
	60	**EG330060**	Bind Head Screw	3.0X10 MFZN2Y			2	01
	70	**VS378000**	Sash Cover	BL				03
	80	**VS378100**	Sash Cover	BL				03
	90	**VS368500**	Bushing				3	03
	120	**VN920900**	Bind Head Tapping Screw-1	3.5X8 MFZN2BL			19	01
	130	**--**	Adhesive Tape	#500 600X12		(VO02370)	4	
	140	**VV285600**	Holder, Rod					03
	150	**VV285700**	Holder, Rod				2	03

***New parts** **RANK:Japan only**

■ POWER SUPPLY UNIT

• **Top view**

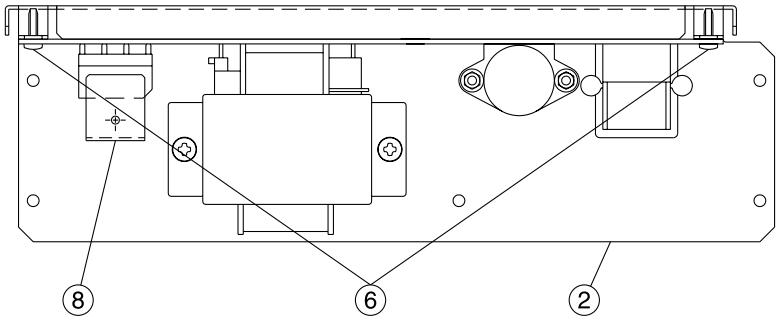

• **Front view**

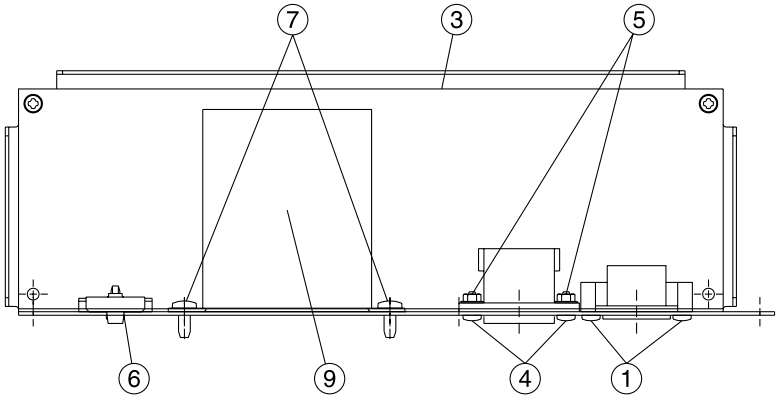

	REF NO.	PART NO.	DESCRIPTION			REMARKS	QTY	RANK
⚠			POWER SUPPLY UNIT			YDP101,S		
⚠		**V0010200**	Power Supply Unit			J		
⚠		**V0010300**	Power Supply Unit			U YDP101S		14
⚠		**V0010400**	Power Supply Unit			E		14
⚠		**V0010500**	Power Supply Unit			N		
	1	**EP600140**	Bind Head Tapping Screw-B	3.0X10 MFZN2BL			2	01
	2	**VZ958800**	Plate, AC Inlet			J,E		07
	2	**VZ958900**	Panel, AC Inlet			N		08
	3	**V0010700**	Circuit Board	PS		J		11
	3	**V0010800**	Circuit Board	PS		U YDP101S		11
	3	**V0011000**	Circuit Board	PS		E		11
	3	**V0011100**	Circuit Board	PS		N		12
	4	**EG330320**	Bind Head Screw	3.0X12 MFZN2BL		N	2	01
	5	**VA211900**	Hexagonal Nut	3.0 MFZN2Y		N	2	01
	6	**VE683000**	Bind Head Tapping Screw-B	3.0X12 MFZN2Y			3	01
	7	**EP600240**	Bind Head Tapping Screw-B	4.0X10 MFZN2BL			2	01
	8	**VT461100**	Transistor Holder					03
⚠	9	**XU445A00**	Power Transformer	J/UL/CSA A		J,U		09
⚠	9	**XU446A00**	Power Transformer	IEC65 E		E		09
⚠	9	**XU447A00**	Power Transformer	N IEC65 E		N		09

***New parts** **RANK:Japan only**

■ KEYBOARD ASSEMBLY

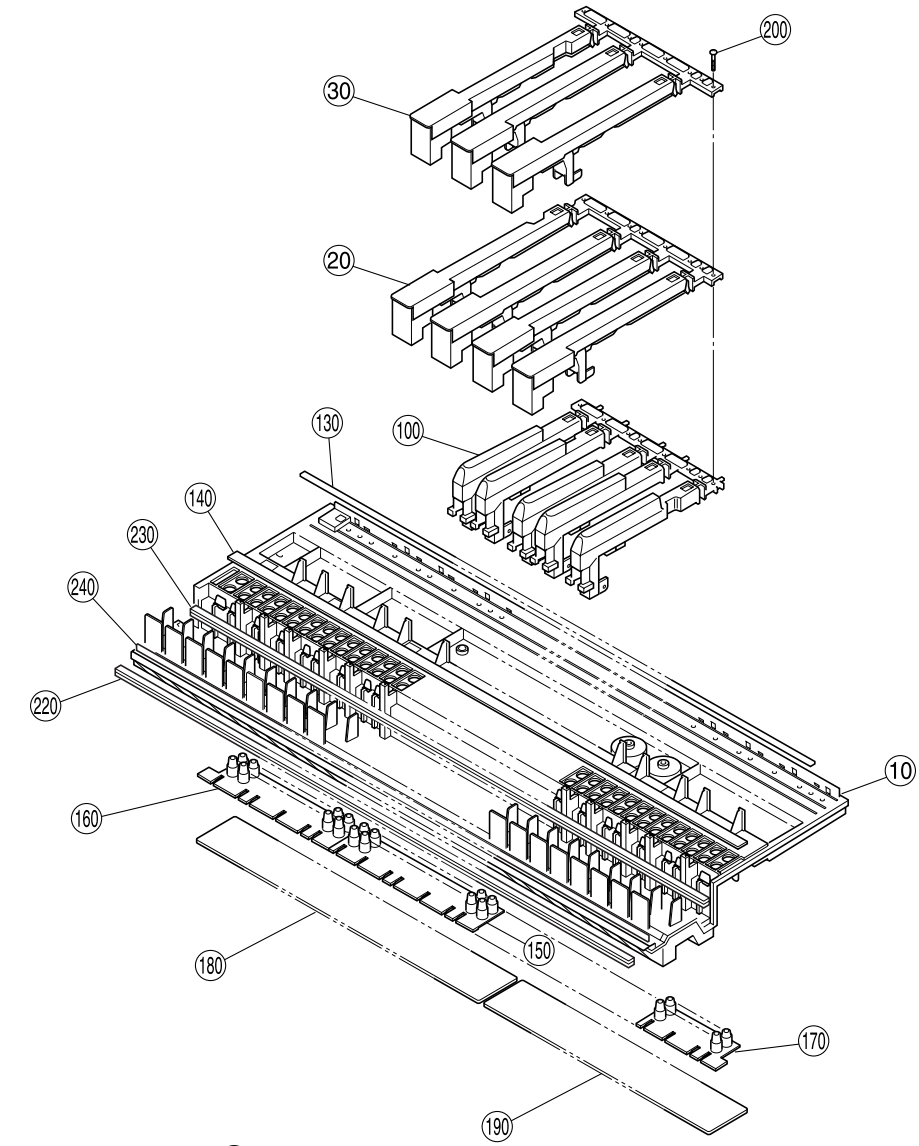

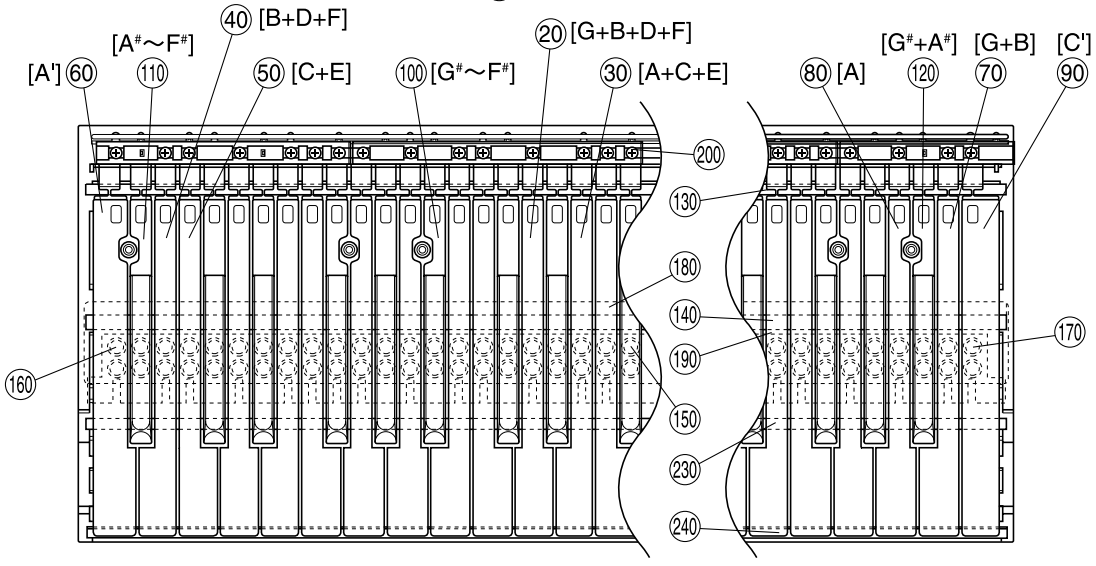

REF NO.	PART NO.	DESCRIPTION			REMARKS	QTY	RANK
		KEYBOARD ASSEMBLY			YDP101,S		
	VT019600	Keyboard Assembly	A88 K6				42
10	**--**	Frame			(VS91790)		
20	**VI212300**	White Keys Assembly	GBDF			6	
30	**VI212400**	White Keys Assembly	ACE			6	
40	**VT066400**	White Keys Assembly	BDF				06
50	**VT066500**	White Keys Assembly	CE				06
60	**VT066600**	White Key Assembly	A f				05
70	**VT066700**	White Keys Assembly	GB				06
80	**VT066800**	White Key Assembly	A				06
90	**VT066900**	White Key Assembly	C f				05
100	**VH941000**	Black Key				6	05
110	**VS918400**	Black Keys	A#-F#				08
120	**VS918500**	Black Keys	G#,A#				08
130	**VT068300**	Felt	WH				02
140	**VT068800**	Felt					04
150	**VI223000**	Rubber Contact	12KEYS			6	07
160	**VT069000**	Rubber Contact	10KEYS				07
170	**VT069200**	Rubber Contact	6KEYS				07
180	**VT069500**	Circuit Board	AELC-L				12
190	**VT069700**	Circuit Board	AELC-H				11
200	**VT069800**	Bind Head Tapping Screw-P	3.0X20 MFZN2			59	01
210	**--**	Grease	G-073KA		(VJ52920)		
220	**VT069900**	Stopper Felt	WH				06
230	**VT070000**	Stopper Felt	BL				05
240	**VT070100**	Rubber Sheet	BL				05

***New parts** **RANK:Japan only**

■ KEYBOARD SUB ASSEMBLY

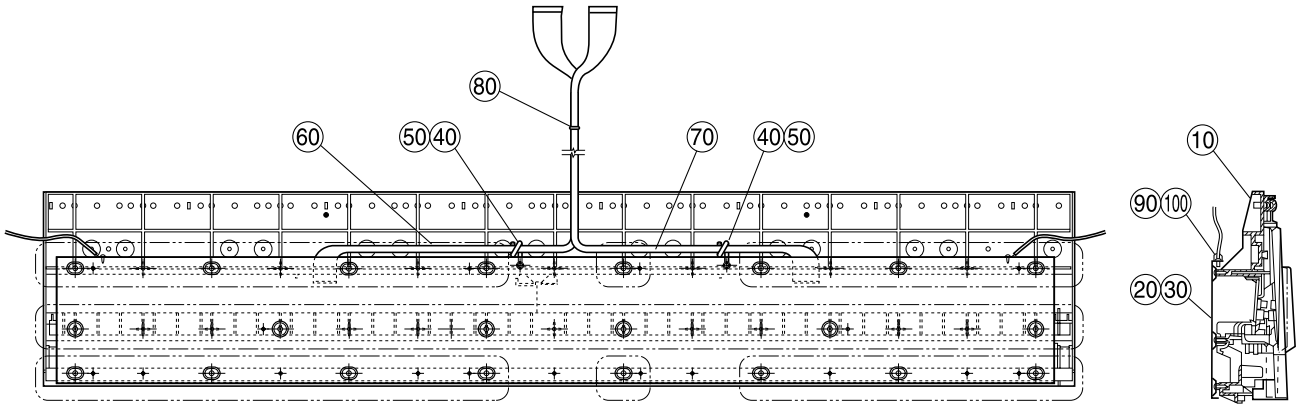

REF NO.	PART NO.	DESCRIPTION			REMARKS	QTY	RANK
		KEYBOARD SUB ASSEMBLY			YDP101,S		
	--	Keyboard Sub Assembly			(VV54370)		
10	**VT019600**	Keyboard Assembly	A88 K6				42
20	**VT611800**	Holder, Keyboard					10
30	**EP600300**	Bind Head Tapping Screw-P	3.0X12 MFZN2Y			22	01
40	**CB817510**	Cord Binder	S-14B			2	03
50	**EP600280**	Bind Head Tapping Screw-P	3.0X8 MFZN2Y			2	01
60	--	Connector Assembly	14P-550 KRD-KRD		(VK11440)		
70	--	Connector Assembly	16P-350 KRD-KRD		(VK10920)		
80	**CB069250**	Cord Holder	BK-1				01
90	--	GND Wire			(VH52620)	2	
100	**EP600530**	Bind Head Tapping Screw-S	3.0X8 MFZN2BL			2	01

***New parts** **RANK:Japan only**

BENCH

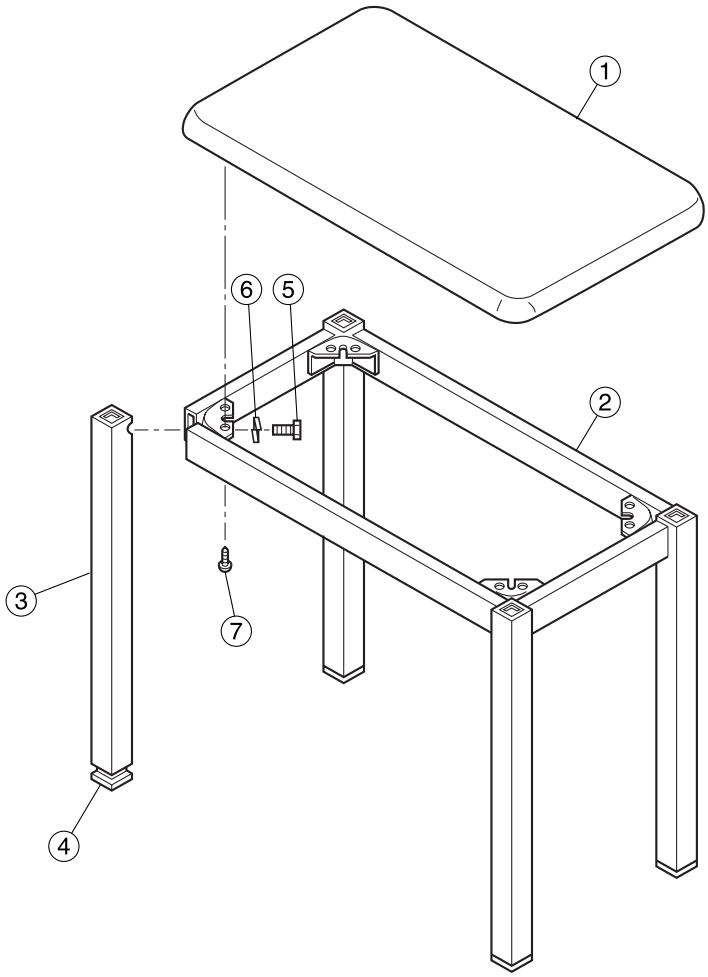

REF NO.	PART NO.	DESCRIPTION			REMARKS	QTY	RANK
		BENCH			YDP101		
	--	BENCH	BC-X		(VV44340)		
1	**NX007730**	BENCH BOARD ASSEMBLY					13
2	**AX010090**	BENCH FRAME ASSEMBLY					15
3	**AX010100**	LEG PIPE ASSEMBLY				4	11
4	**CX004190**	LEG CAP				4	07
5	**EX001280**	HEXAGONAL BOLT	M10P 1.5L 50 MFZN			4	03
6	**EX001290**	SPRING WASHER	M10 t=2 MFZN2Y			4	03
7	**EX001300**	BIND HEAD TAPPING SCREW	M4X15 MFZN2Y				03

***New parts** **RANK:Japan only**

■ ELECTRICAL PARTS

	REF NO.	PART NO.	DESCRIPTION		REMARKS	QTY	RANK
			ELECTRICAL PARTS		YDP101,S		
		VT069500	Circuit Board	AELC-L	(XQ182A0)		12
		VT069700	Circuit Board	AELC-H	(XQ183A0)		11
*		**V3066400**	Circuit Board	DM	(XU373C0)		
		V2021000	Circuit Board	HP	(XU684A0)		
*		**V3067200**	Circuit Board	KSN2	(XV384B0)		
*		**V3066300**	Circuit Board	M	(XU380E0)		
		V2337300	Circuit Board	PEDAL	(XR780B0)		07
		VN637600	Circuit Board	PL	(XL151B0)		05
*		**V3091200**	Circuit Board	PNL	(XV490B0)		
*		**V3091300**	Circuit Board	PNR	(XV490B0)		
		V0010700	Circuit Board	PS (J)	J (XU372C0)		11
		V0010800	Circuit Board	PS (U)	U (XU372C0)		11
		V0011000	Circuit Board	PS (E)	E (XU372C0)		11
		V0011100	Circuit Board	PS (N)	N (XU372C0)		12
		VT069500	Circuit Board	AELC-L	(XQ182A0)		12
	20	**VF283400**	Connector Base Post	PH-16P TE			01
*	30	**VE852400**	Cable Holder	51016 12P TE			
*	40	**VI222900**	Connector Assembly	12P100			
	50	**VB941200**	Diode	1SS133,1SS176			01
		VT069700	Circuit Board	AELC-H	(XQ183A0)		11
	20	**VE352600**	Connector Base Post	PH-14P TE			01
	30	**VE851300**	Wire Trap	52004 12P TE			
	40	**VB941200**	Diode	1SS133,1SS176			01
*		**V3066400**	Circuit Board	DM J	(XU373C0)		
	C001	**US061220**	Ceramic Capacitor (chip)	22P 50V J			01
	C002	**US061220**	Ceramic Capacitor (chip)	22P 50V J			01
	C003	**US064100**	Ceramic Capacitor-B (chip)	0.01 50V K			01
	C004	**US135100**	Ceramic Capacitor-F (chip)	0.1 16V Z			01
	C005	**US135100**	Ceramic Capacitor-F (chip)	0.1 16V Z			01
	C006	**UE037100**	Electrolytic Cap. (chip)	10 16V RV2			01
	C007	**US064100**	Ceramic Capacitor-B (chip)	0.01 50V K			01
	C008	**UE037100**	Electrolytic Cap. (chip)	10 16V RV2			01
	C009	**US064100**	Ceramic Capacitor-B (chip)	0.01 50V K			01
	C010	**US064100**	Ceramic Capacitor-B (chip)	0.01 50V K			01
	C011	**UE037100**	Electrolytic Cap. (chip)	10 16V RV2			01
	C012	**US064100**	Ceramic Capacitor-B (chip)	0.01 50V K			01
	C013	**UE037100**	Electrolytic Cap. (chip)	10 16V RV2			01
	C014	**US064100**	Ceramic Capacitor-B (chip)	0.01 50V K			01
	C015	**UE037100**	Electrolytic Cap. (chip)	10 16V RV2			01
	C016	**US064100**	Ceramic Capacitor-B (chip)	0.01 50V K			01
	C017	**UF017470**	Electrolytic Cap. (chip)	47 6.3V			01
	C018	**US064100**	Ceramic Capacitor-B (chip)	0.01 50V K			01
	-020	**US064100**	Ceramic Capacitor-B (chip)	0.01 50V K			01
	C021	**VI055000**	Super Capacitor	0.1 F 5.5V FYD0H			04
	C022	**US064100**	Ceramic Capacitor-B (chip)	0.01 50V K			01
	C023	**US064100**	Ceramic Capacitor-B (chip)	0.01 50V K			01
	C024	**UE037470**	Electrolytic Cap. (chip)	47 16V RV2			01
	C025	**UE037470**	Electrolytic Cap. (chip)	47 16V RV2			01
	C026	**US062100**	Ceramic Capacitor (chip)	100P 50V J			01
	C027	**US062220**	Ceramic Capacitor (chip)	220P 50V J			
	C028	**US135100**	Ceramic Capacitor-F (chip)	0.1 16V Z			01
	C101	**US064100**	Ceramic Capacitor-B (chip)	0.01 50V K			01
	C102	**UE037470**	Electrolytic Cap. (chip)	47 16V RV2			01
	-104	**UE037470**	Electrolytic Cap. (chip)	47 16V RV2			01
	C105	**US064100**	Ceramic Capacitor-B (chip)	0.01 50V K			01
	C113	**UE146470**	Electrolytic Cap.-BP (chip)	4.7 25V RV2BP			01
	C123	**UE146470**	Electrolytic Cap.-BP (chip)	4.7 25V RV2BP			01
	CN001	**VZ878300**	Receptacle	MDF7 30P BE			03
	CN002	**VZ878300**	Receptacle	MDF7 30P BE			03
	D001	**VV925900**	Diode	RLS-73 TE-11			01
	D002	**VV925900**	Diode	RLS-73 TE-11			01
	IC001	**XU947A00**	IC	HG73C205FD	SWX00		09
*	IC002	**XV573100**	IC	LHMNSHIK(1)	MASK ROM MAIN		
	IC002	**VK863100**	IC Socket	DICF-42CS-E			03
	IC003	**XU719A00**	IC	HM621664HBLJP-20	SRAM 1M		11
	IC004	**XP867A00**	IC	UPD63200GS-E1	DAC		07

***New parts** **RANK:Japan only**

	REF NO.	PART NO.	DESCRIPTION		REMARKS	QTY	RANK
	IC006	**XJ598A00**	IC	NJM78L05UA	REGULATOR +5V		02
	IC007	**XS516A00**	IC	UPC2933T-E1	REGULATOR +3.3V		03
	IC008	**XD655A00**	IC	TC74HC00AF	NAND		01
	R001	**RD355330**	Carbon Resistor (chip)	330 63M J			01
	R002	**RD356100**	Carbon Resistor (chip)	1.0K 63M J			01
	R003	**RD356100**	Carbon Resistor (chip)	1.0K 63M J			01
	R004	**RD357100**	Carbon Resistor (chip)	10K 63M J			01
	-006	**RD357100**	Carbon Resistor (chip)	10K 63M J			01
	R007	**RD358470**	Carbon Resistor (chip)	470K 63M J			01
	R008	**RD355100**	Carbon Resistor (chip)	100 63M J			01
	R009	**RD355100**	Carbon Resistor (chip)	100 63M J			01
	R010	**RD356150**	Carbon Resistor (chip)	1.5K 63M J			01
	R011	**RD354470**	Carbon Resistor (chip)	47 63M J			01
	R012	**RD354470**	Carbon Resistor (chip)	47 63M J			01
	R013	**RD357470**	Carbon Resistor (chip)	47K 63M J			01
	R014	**RD357470**	Carbon Resistor (chip)	47K 63M J			01
	R015	**RD354470**	Carbon Resistor (chip)	47 63M J			01
	-020	**RD354470**	Carbon Resistor (chip)	47 63M J			01
	R021	**RD357470**	Carbon Resistor (chip)	47K 63M J			01
	R022	**RD357100**	Carbon Resistor (chip)	10K 63M J			01
	-028	**RD357100**	Carbon Resistor (chip)	10K 63M J			01
	R029	**RD357470**	Carbon Resistor (chip)	47K 63M J			01
	R030	**RD357470**	Carbon Resistor (chip)	47K 63M J			01
	R031	**RD354470**	Carbon Resistor (chip)	47 63M J			01
	R032	**RD355470**	Carbon Resistor (chip)	470 63M J			01
	R033	**RD354470**	Carbon Resistor (chip)	47 63M J			01
	R036	**RD355100**	Carbon Resistor (chip)	100 63M J			01
	R040	**RD350000**	Carbon Resistor (chip)	0 63M J			01
	R042	**RD350000**	Carbon Resistor (chip)	0 63M J			01
	R113	**RD350000**	Carbon Resistor (chip)	0 63M J			01
	R123	**RD350000**	Carbon Resistor (chip)	0 63M J			01
	X001	**VZ703600**	Quartz Crystal Unit	8.4672M SMD-49			03
	ZD001	**VU172000**	Zener Diode	UDZS5.6BTE-17 5.6V			01
		V2021000	Circuit Board	HP	(XU684A0)		
		--	Earth Wire		(VT89070)		
		V2296000	Spacer B				
		--	Jumper Wire	0.55	(VD04170)		
	C1	**FG413330**	Ceramic Capacitor-B	3300P 50V K			01
	-5	**FG413330**	Ceramic Capacitor-B	3300P 50V K			01
	C6	**UN847220**	Electrolytic Cap.-BP	22.00 25.0V			01
	C7	**UN847220**	Electrolytic Cap.-BP	22.00 25.0V			01
	CN1	**LB919070**	Base Post Connector	XH 7P SE			01
	CN2	**VB858100**	Connector Base Post	PH- 2P SE			01
	FL3	**GE300670**	Ferrite Bead	BL02RN2-R62T4			02
	FL3	**VB871100**	Ferrite Bead	BL02RN2-R62			01
	FL6	**GE300670**	Ferrite Bead	BL02RN2-R62T4			02
	FL6	**VB871100**	Ferrite Bead	BL02RN2-R62			01
	HP1	**LB101870**	Phone Jack	YKB21-5006	PHONES		03
	HP2	**LB101870**	Phone Jack	YKB21-5006	PHONES		03
	R1	**VS906000**	Carbon Resistor	220.0 1/2 J			01
	-4	**VS906000**	Carbon Resistor	220.0 1/2 J			01
	R5	**HF455390**	Carbon Resistor	390.0 1/4 J			01
	R6	**HF455390**	Carbon Resistor	390.0 1/4 J			01
*		**V3067200**	Circuit Board	KSN2	(XV384B0)		
		--	Jumper Wire	0.55	(VD04170)		
	CL1	**VP016200**	Ceramic Resonator	4M CST4.00MGW040Y2			01
	CN1	**VF283400**	Connector Base Post	PH-16P TE			01
	CN2	**VE352600**	Connector Base Post	PH-14P TE			01
	CN3	**VB390400**	Connector Base Post	PH- 8P TE			01
	C01	**UR828100**	Electrolytic Cap.	100.00 10.0V			01
	C02	**FG644100**	Ceramic Capacitor-F	0.01 50V Z			01
	-04	**FG644100**	Ceramic Capacitor-F	0.01 50V Z			01
	IC1	**XR632A00**	IC	YMZ702-D	KSN2		09
	RA1	**VU483500**	Resistor Array	RGLD12X103J			01
	R01	**HF755100**	Carbon Resistor	100.0 1/4 J			01
	R02	**HF755100**	Carbon Resistor	100.0 1/4 J			01
	R03	**HF756100**	Carbon Resistor	1.0K 1/4 J			01
	R04	**HF759100**	Carbon Resistor	1.0M 1/4 J			01

***New parts** **RANK:Japan only**

	REF NO.	PART NO.	DESCRIPTION		REMARKS	QTY	RANK
*		**V3066300**	Circuit Board	M J	(XU380E0)		
		VI249300	Support, PCB	KGLS-4S			01
		EP600220	Bind Head Tapping Screw-B	3.0X10 MFZN2Y			01
		VT461100	Transistor Holder				03
		V2308300	Heat Sink				04
		--	Jumper Wire	0.55	(VD04170)		
	C1	**UR837100**	Electrolytic Cap.	10.00 16.0V			01
	C10	**FG644100**	Ceramic Capacitor	0.01 50V Z			01
	C20	**FG644100**	Ceramic Capacitor	0.01 50V Z			01
	C21	**FG644100**	Ceramic Capacitor	0.01 50V Z			01
	C51	**FG644100**	Ceramic Capacitor	0.01 50V Z			01
	C61	**FG644100**	Ceramic Capacitor	0.01 50V Z			01
	C62	**FG644100**	Ceramic Capacitor	0.01 50V Z			01
	C63	**UR848100**	Electrolytic Cap.	100.00 25.0V			01
	C64	**UR848100**	Electrolytic Cap.	100.00 25.0V			01
	C71	**UR848220**	Electrolytic Cap.	220.00 25.0V			01
	C72	**UR828470**	Electrolytic Cap.	470.00 10.0V			01
	C100	**UR848220**	Electrolytic Cap.	220.00 25.0V			01
	C102	**FG612180**	Ceramic Cap.-B	180P 50V K	(VD04170)		
	C104	**--**	Jumper Wire	0.55			
	C105	**VC694800**	Semiconductive Cera. Cap.	0.1 25V Z			01
	C133	**UR866220**	Electrolytic Cap.	2.2 50.0V			01
	C134	**FG613100**	Ceramic Capacitor-B	1000P 50V K			01
	C135	**UR837220**	Electrolytic Cap.	22.00 16.0V			01
	C136	**UR838220**	Electrolytic Cap.	220.00 16.0V			01
	C137	**UR846470**	Electrolytic Cap.	4.7 25.0V			01
	C141	**VC694800**	Semiconductive Cera. Cap.	0.1 25V Z			01
	-144	**VC694800**	Semiconductive Cera. Cap.	0.1 25V Z			01
	C150	**FG644100**	Ceramic Capacitor	0.01 50V Z			01
	C151	**UR828470**	Electrolytic Cap.	470.00 10.0V			01
	C202	**FG612180**	Ceramic Cap.-B	180P 50V K	(VD04170)		
	C204	**--**	Jumper Wire	0.55			
	C233	**UR866220**	Electrolytic Cap.	2.2 50.0V			01
	C234	**FG613100**	Ceramic Capacitor-B	1000P 50V K			01
	C235	**UR837220**	Electrolytic Cap.	22.00 16.0V			01
	C237	**UR846470**	Electrolytic Cap.	4.7 25.0V			01
	C241	**VC694800**	Semiconductive Cera. Cap.	0.1 25V Z			01
	-244	**VC694800**	Semiconductive Cera. Cap.	0.1 25V Z			01
	C503	**UR846470**	Electrolytic Cap.	4.7 25.0V			01
	C513	**UR846470**	Electrolytic Cap.	4.7 25.0V			01
	C570	**FG644100**	Ceramic Capacitor	0.01 50V Z			01
	C571	**FG652100**	Ceramic Capacitor-SL	100P 50V J			01
	C580	**FG644100**	Ceramic Capacitor	0.01 50V Z			01
	CA41	**VK994900**	Ceramic Capacitor Array	100P 50V M			01
	CA51	**VK994900**	Ceramic Capacitor Array	100P 50V M			01
	CA571	**VK994900**	Ceramic Capacitor Array	100P 50V M			01
	CA572	**VH484100**	Ceramic Capacitor Array	100P 50V M			02
	CA581	**VH484100**	Ceramic Capacitor Array	100P 50V M			02
	CN1	**V2337100**	Pin Header	RF 30P TE	}		04
	CN1	**V2337200**	Pin Header	9022 30P TE	}		04
	CN2	**V2337100**	Pin Header	RF 30P TE	}		04
	CN2	**V2337200**	Pin Header	9022 30P TE	}		04
	CN50	**VB390400**	Connector Base Post	PH- 8P TE			01
	CN60	**LB918050**	Base Post Connector	XH 5P TE			01
	CN80	**LB918070**	Base Post Connector	XH 7P TE			01
	CN90	**LB932040**	Base Post Connector	VH- 4P TE			01
	CN100	**VB390400**	Connector Base Post	PH- 8P TE			01
	CN570	**VB390800**	Connector Base Post	PH-12P TE			01
	CN580	**VB390400**	Connector Base Post	PH- 8P TE			01
	D1	**VB941200**	Diode	1SS133,1SS176			01
	D21	**VB941200**	Diode	1SS133,1SS176			01
	D81	**VB481900**	Diode	11ES4			01
	D501	**VB481900**	Diode	11ES4			01
	IC10	**IR013200**	IC	TC74HC132AP	}		03
	IC10	**IR013250**	IC	SN74HC132N	} NAND		03
	IC20	**VD473200**	Photo Coupler	6N137			05
	IC60	**XU387A00**	IC	UPC24M12AHF	REGULATOR +12V		03
	IC70	**XR925A00**	IC	SI-8401L	REGULATOR +5V 0.5A		05
	IC100	**XU131A00**	IC	TA8233H	POWER AMP 30W*2 BTL		06

***New parts** **RANK:Japan only**

	REF NO.	PART NO.	DESCRIPTION			REMARKS	QTY	RANK
	IC150	**XB247A00**	IC	UPC4570HA		OP AMP		02
	J1	**--**	Jumper Wire	0.55		(VD04170)		
	J2	**--**	Jumper Wire	0.55		(VD04170)		
	J5	**--**	Jumper Wire	0.55		(VD04170)		
	J6	**--**	Jumper Wire	0.55		(VD04170)		
	JK20	**VT202500**	DIN Connector	5P YKF51-50		MIDI IN		01
	JK30	**VT202500**	DIN Connector	5P YKF51-50		MIDI OUT		01
	JK40	**VZ743800**	DIN Connector	DIN 6P MD-S610		PEDAL		02
	JK502	**VS115400**	Phone Jack	LGR4609-7000		AUX OUT L/L+R		01
	JK512	**VS115400**	Phone Jack	LGR4609-7000		AUX OUT R		01
	L21	**VB835000**	Coil	FL5R200QNT				01
	L22	**VB835000**	Coil	FL5R200QNT				01
	L31	**VB835000**	Coil	FL5R200QNT				01
	L32	**VB835000**	Coil	FL5R200QNT				01
	L33	**GE300670**	Ferrite Bead	BL02RN2-R62T4				02
	L41	**VB835000**	Coil	FL5R200QNT				01
	-44	**VB835000**	Coil	FL5R200QNT				01
*	L502	**V3085000**	Coil	R-5C.10U				
*	L503	**V3085000**	Coil	R-5C.10U				
*	L512	**V3085000**	Coil	R-5C.10U				
*	L513	**V3085000**	Coil	R-5C.10U				
	R1	**HF758470**	Carbon Resistor	470.0K 1/4 J				01
	R2	**HF757220**	Carbon Resistor	22.0K 1/4 J				01
	R3	**HF756100**	Carbon Resistor	1.0K 1/4 J				01
	R4	**HF757100**	Carbon Resistor	10.0K 1/4 J				01
	R5	**HF757100**	Carbon Resistor	10.0K 1/4 J				01
	R6	**HF758470**	Carbon Resistor	470.0K 1/4 J				01
	R7	**HF757220**	Carbon Resistor	22.0K 1/4 J				01
	R8	**HF757100**	Carbon Resistor	10.0K 1/4 J				01
	R9	**HF756270**	Carbon Resistor	2.7K 1/4 J				01
	R10	**HF755220**	Carbon Resistor	220.0 1/4 J				01
	R11	**HF755100**	Carbon Resistor	100.0 1/4 J				01
	R12	**HF755100**	Carbon Resistor	100.0 1/4 J				01
	R21	**HF756100**	Carbon Resistor	1.0K 1/4 J				01
	R22	**HF755220**	Carbon Resistor	220.0 1/4 J				01
	R31	**HF757100**	Carbon Resistor	10.0K 1/4 J				01
	R32	**HF757220**	Carbon Resistor	22.0K 1/4 J				01
	R33	**HF757220**	Carbon Resistor	22.0K 1/4 J				01
	R34	**HF756150**	Carbon Resistor	1.5K 1/4 J				01
	R35	**HF755220**	Carbon Resistor	220.0 1/4 J				01
	R36	**HF755220**	Carbon Resistor	220.0 1/4 J				01
	R51	**HF755100**	Carbon Resistor	100.0 1/4 J				01
	-54	**HF755100**	Carbon Resistor	100.0 1/4 J				01
	R81	**HF756470**	Carbon Resistor	4.7K 1/4 J				01
	R82	**HF756560**	Carbon Resistor	5.6K 1/4 J				01
	R83	**HF756560**	Carbon Resistor	5.6K 1/4 J				01
	R91	**HF757100**	Carbon Resistor	10.0K 1/4 J				01
	R92	**HF756470**	Carbon Resistor	4.7K 1/4 J				01
	R93	**HF757100**	Carbon Resistor	10.0K 1/4 J				01
	R94	**HF757100**	Carbon Resistor	10.0K 1/4 J				01
	R101	**HF756680**	Carbon Resistor	6.8K 1/4 J				01
	R102	**HF757330**	Carbon Resistor	33.0K 1/4 J				01
	R131	**--**	Jumper Wire	0.55		(VD04170)		
	R132	**--**	Jumper Wire	0.55		(VD04170)		
	R133	**HF756100**	Carbon Resistor	1.0K 1/4 J				01
	R134	**HF755150**	Carbon Resistor	150.0 1/4 J				01
	R141	**HF753220**	Carbon Resistor	2.2 1/4 J				01
	R142	**HF753220**	Carbon Resistor	2.2 1/4 J				01
	R151	**HF755560**	Carbon Resistor	560.0 1/4 J				01
	R152	**HF755560**	Carbon Resistor	560.0 1/4 J				01
	R201	**HF756680**	Carbon Resistor	6.8K 1/4 J				01
	R202	**HF757330**	Carbon Resistor	33.0K 1/4 J				01
	R231	**--**	Jumper Wire	0.55		(VD04170)		
	R232	**--**	Jumper Wire	0.55		(VD04170)		
	R233	**HF756100**	Carbon Resistor	1.0K 1/4 J				01
	R234	**HF755150**	Carbon Resistor	150.0 1/4 J				01
	R241	**HF753220**	Carbon Resistor	2.2 1/4 J				01
	R242	**HF753220**	Carbon Resistor	2.2 1/4 J				01
	R504	**HF755680**	Carbon Resistor	680.0 1/4 J				01
	R506	**HF757100**	Carbon Resistor	10.0K 1/4 J				01

***New parts** **RANK:Japan only**

	REF NO.	PART NO.	DESCRIPTION		REMARKS	QTY	RANK
	R514	**HF755680**	Carbon Resistor	680.0 1/4 J			01
	R516	**HF757100**	Carbon Resistor	10.0K 1/4 J			01
	R581	**HF754470**	Carbon Resistor	47.0 1/4 J			01
	R582	**HF754470**	Carbon Resistor	47.0 1/4 J			01
	R583	**HF755100**	Carbon Resistor	100.0 1/4 J			01
	-588	**HF755100**	Carbon Resistor	100.0 1/4 J			01
	R601	**--**	Jumper Wire	0.55	(VD04170)		
	R602	**--**	Jumper Wire	0.55	(VD04170)		
	R605	**--**	Jumper Wire	0.55	(VD04170)		
	R606	**--**	Jumper Wire	0.55	(VD04170)		
	RY81	**VK881200**	Relay	DC G5Z-2A-YA			04
	RY501	**KC001900**	Relay	DC RY12W			07
	TA570	**VH885000**	Transistor Array	TD62785P SOURCE			04
	TA580	**IG136700**	Transistor Array	TD62083AP			05
	TR1	**IC174070**	Transistor	2SC1740S R,S			01
	TR2	**IA101590**	Transistor	2SA1015 O,Y			01
	TR31	**IC174070**	Transistor	2SC1740S R,S			01
	TR32	**IC174070**	Transistor	2SC1740S R,S			01
	TR91	**IC174070**	Transistor	2SC1740S R,S			01
		V2337300	Circuit Board	PEDAL	(XR780B0)		07
		--	Jumper Wire	0.55	(VD04170)		
		--	GND Wire	L=30	(VZ01760)		
	CN3	**VB390200**	Connector Base Post	PH- 6P TE			01
		VN637600	Circuit Board	PL	(XL151B0)		05
	CN1	**VB858100**	Connector Base Post	PH- 2P SE			01
	LED1	**VD180000**	LED	SLZ-190B-03 RE			01
*							
*		**V3091200**	Circuit Board	PNL	(XV490B0)		
		V3091300	Circuit Board	PNR	(XV490B0)		
	C11	**VR168900**	Monolithic Mylar Capacitor	ECQ-V1H274JL3			01
	C12	**UA654390**	Mylar Capacitor	0.039 50V J			01
	C13	**UA353150**	Mylar Capacitor	1500P 50V J			
	C21	**VR168900**	Monolithic Mylar Capacitor	ECQ-V1H274JL3			01
	C22	**UA654390**	Mylar Capacitor	0.039 50V J			01
	C23	**UA353150**	Mylar Capacitor	1500P 50V J			
	CN101	**VB858700**	Connector Base Post	PH- 8P SE			01
	CN201	**VB858700**	Connector Base Post	PH- 8P SE			01
	CN301	**VB858700**	Connector Base Post	PH- 8P SE			01
	CN202	**VC166500**	Connector Base Post	PH-12P SE			01
	CN302	**VC166500**	Connector Base Post	PH-12P SE			01
	D102	**VB941200**	Diode	1SS133,1SS176			01
	D103	**VB941200**	Diode	1SS133,1SS176			01
	D202	**VB941200**	Diode	1SS133,1SS176			01
	D203	**VB941200**	Diode	1SS133,1SS176			01
	D205	**VB941200**	Diode	1SS133,1SS176			01
	D206	**VB941200**	Diode	1SS133,1SS176			01
	D305	**VB941200**	Diode	1SS133,1SS176			01
	D306	**VB941200**	Diode	1SS133,1SS176			01
	D402	**VB941200**	Diode	1SS133,1SS176			01
	D405	**VB941200**	Diode	1SS133,1SS176			01
	D406	**VB941200**	Diode	1SS133,1SS176			01
	D502	**VB941200**	Diode	1SS133,1SS176			01
	-506	**VB941200**	Diode	1SS133,1SS176			01
	D602	**VB941200**	Diode	1SS133,1SS176			01
	-606	**VB941200**	Diode	1SS133,1SS176			01
	LD01	**VS150300**	LED	SEL4214S TP5 RE	TRANSPOSE		01
	LD02	**VD180000**	LED	SLZ-190B-03 RE	REVERB,TOUCH		01
	-08	**VD180000**	LED	SLZ-190B-03 RE			01
	LD09	**VS150300**	LED	SEL4214S TP5 RE	GRAND PIANO,E.PIANO,		
	-16	**VS150300**	LED	SEL4214S TP5 RE	HARPSICORD,STRINGS, PIPE ORGAN,VARIATION, FUNCTION,SONG		
	LD17	**VS150500**	LED	SML12460C TP4RE-GR	TRACK1		01
	LD18	**VS150500**	LED	SML12460C TP4RE-GR	TRACK2		01
	LD19	**VN135500**	LED	LB-303VA			06
	R01	**HF754470**	Carbon Resistor	47.0 1/4 J			01
	-07	**HF754470**	Carbon Resistor	47.0 1/4 J			01
	R10	**HF756470**	Carbon Resistor	4.7K 1/4 J			01

***New parts** **RANK:Japan only**

	REF NO.	PART NO.	DESCRIPTION			REMARKS	QTY	RANK
	R12	**HF756470**	Carbon Resistor	4.7K 1/4 J				01
	R13	**HF756120**	Carbon Resistor	1.2K 1/4 J				01
	R20	**HF756470**	Carbon Resistor	4.7K 1/4 J				01
	R22	**HF756470**	Carbon Resistor	4.7K 1/4 J				01
	R23	**HF756120**	Carbon Resistor	1.2K 1/4 J				01
	SW1	**VY759800**	Tact Switch	SKQNAB		DEMO,TRANSPOSE,REVERB,		01
	-21	**VY759800**	Tact Switch	SKQNAB		TOUCH,GRAND PIANO,E.PIANO, HARPSICORD,STRINGS, PIPE ORGAN,VARIATION, METRONOME,TEMP (UP,DOWN),		01
						FUNCTION,SONG,-/NO,+/YES, START/STOP,REC.,TRACK1, TRACK2		
	VR1	**V0042100**	Slide Variable Resistor	B 10.0K RS30112A9		MASTER VOLUME		03
		V0010700	Circuit Board	PS (J)		J YDP101 (XU372C0)		11
		V0010800	Circuit Board	PS (U)		U YDP101S		
		V0011000	Circuit Board	PS (E)		E YDP101 (XU372C0)		11
		V0011100	Circuit Board	PS (N)		N YDP101 (XU372C0)		12
		VT139600	Voltage Selector	M1684-B		N		04
		VT308100	AC Inlet	CCT9302-0101M				02
		LB201530	Fuse Holder	PC-PH1				01
		--	Jumper Wire	0.55		(VD04170)		
	C1	**FI383470**	Capacitor	4700P 400V U.C.S.V				01
	C1	**VY675100**	Capacitor	4700P 250V J.U.C.S				01
	C2	**FI383470**	Capacitor	4700P 400V U.C.S.V				01
	C2	**VY675100**	Capacitor	4700P 250V J.U.C.S				01
	C3	**VT575200**	Capacitor	0.01 400V J.U.C.S				01
	C3	**VY675000**	Capacitor	0.01 250V J.U.C.S				01
	C4	**UA654470**	Mylar Capacitor	0.047 50V J				01
	C5	**V2126200**	Electrolytic Cap.	10000 25.0V				04
	C6	**UR866330**	Electrolytic Cap.	3.3 50.0V				01
	CN1	**LB932030**	Base Post Connector	VH- 3P TE				01
	CN2	**LB918050**	Base Post Connector	XH 5P TE				01
	D1	**VB481900**	Diode	11ES4				01
	D1	**VF195600**	Diode	11ES4 TA1				01
	D2	**VB481900**	Diode	11ES4				01
	D2	**VF195600**	Diode	11ES4 TA1				01
	DB1	**VN011300**	Diode Stack	D3SBA20 4.0A 200V				03
⚠	F1	**KB003570**	Fuse	2.00A JU		J,N,U YDP101S		01
⚠	F1	**KB003040**	Fuse	1.00A S		E		01
⚠	F2	**KB003040**	Fuse	1.00A S		N		01
⚠	F3	**KB003630**	Fuse	5.00A JU		J,N,U YDP101S		01
⚠	F3	**KB003240**	Fuse	5.00A S		E		01
	J1	**--**	Jumper Wire	0.55		J,E (VD04170)		
	L1	**VF790900**	Coil	SU10V-D20010				03
	R1	**HF456100**	Carbon Resistor	1.0K 1/4 J				01
	R1	**HF756100**	Carbon Resistor	1.0K 1/4 J				01
⚠ *		**VT015700**	AC Cord Set	J 2 2.5M 7A		J		05
⚠ *		**V2916900**	AC Cord Set	J 2 7A 2.5M		J		
⚠		**V3126200**	AC Cord Set	J 2 2.5M 7A		J		
⚠		**VT015800**	AC Cord Set	U 2 2.44M 7A		U YDP101S		
⚠		**VT015900**	AC Cord Set	E 2 2.5M		E,N		
⚠ *		**V2917100**	AC Cord Set	E 2 2.5M 2.5A		E,N		05
⚠ *		**V3126300**	AC Cord Set	E 2 2.5M		E,N		
		VK726106	Connector	CCT 5902		N		03
⚠		**XU445A00**	Power Transformer	J/UL/CSA A		J,U		09
⚠		**XU446A00**	Power Transformer	IEC65 E		E		09
⚠		**XU447A00**	Power Transformer	N IEC65 E		N		09
⚠		**V0010200**	Power Supply Unit			J		
⚠		**V0010300**	Power Supply Unit			U YDP101S		14
⚠		**V0010400**	Power Supply Unit			E		14
⚠		**V0010500**	Power Supply Unit			N		
		VT044200	Head Phone	P402416N2410		YDP101		09
		VC843500	Power Switch	SDDLB 1216A J.U.C.S				03
		V0044700	Connector Assembly	PK				10
		XS419A00	Speaker	16.0cm 4ohm 20W			02	08

***New parts** **RANK:Japan only**

■ OVERALL CIRCUIT DIAGRAM 2/1 (M,DM,HP,PL,PEDAL)

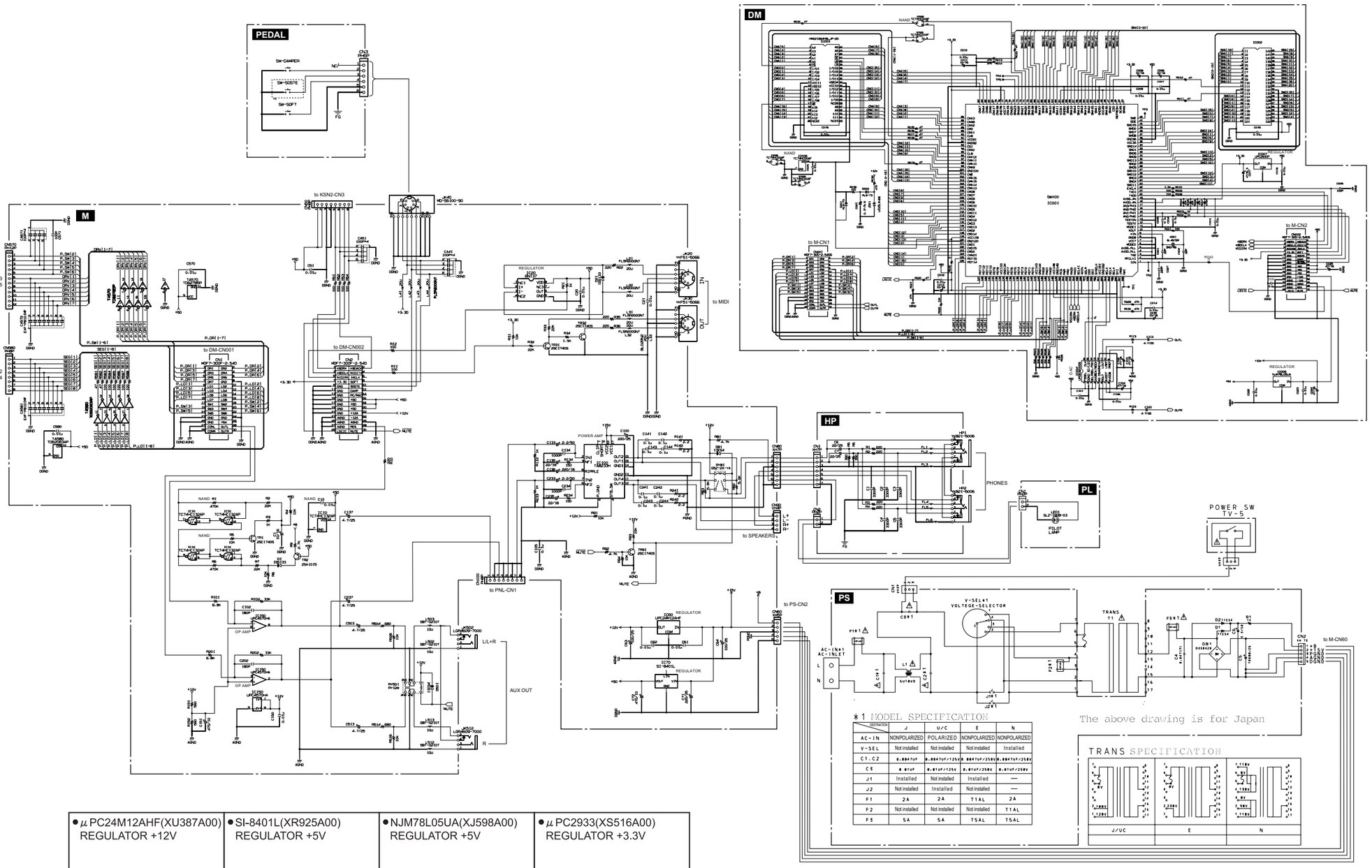

DESTINATION	J	U/C	E	N
AC-IN	NONPOLARIZED	POLARIZED	NONPOLARIZED	NONPOLARIZED
V-SEL	Not installed	Not installed	Not installed	Installed
C1, C2	0.0047UF	0.0047UF/125V	0.0047UF/250V	0.0047UF/250V
C3	0.01UF	0.01UF/125V	0.01UF/250V	0.01UF/250V
J1	Installed	Not installed	Installed	—
J2	Not installed	Installed	Not installed	—
F1	2A	2A	T1AL	2A
F2	Not installed	Not installed	Not installed	T1AL
F3	5A	5A	T5AL	T5AL

● μPC24M12AHF(XU387A00) REGULATOR +12V	● SI-8401L(XR925A00) REGULATOR +5V	● NJM78L05UA(XJ598A00) REGULATOR +5V	● μPC2933(XS516A00) REGULATOR +3.3V
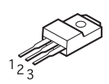	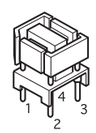	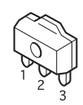	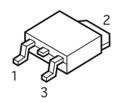
1:INPUT 2:GND 3:OUTPUT	1:VOUT 2:GND 3:LIN 4:VIN	1:OUTPUT 2:COMMON 3:INPUT	1:V in 2:GND 3:V out

Note :See parts list for details of circuit board component parts.

DM :28CC1-8812225 5
M :28CC1-8812915 1
HP :28CC1-8812272 0
PL :28CC1-8812272 0
PEDAL :28CC1-8812279
PS :28CB1-8812254

■ OVERALL CIRCUIT DIAGRAM 2/2 (PNL,PNR,PS,KSN2,AELC-H,AELC-L)

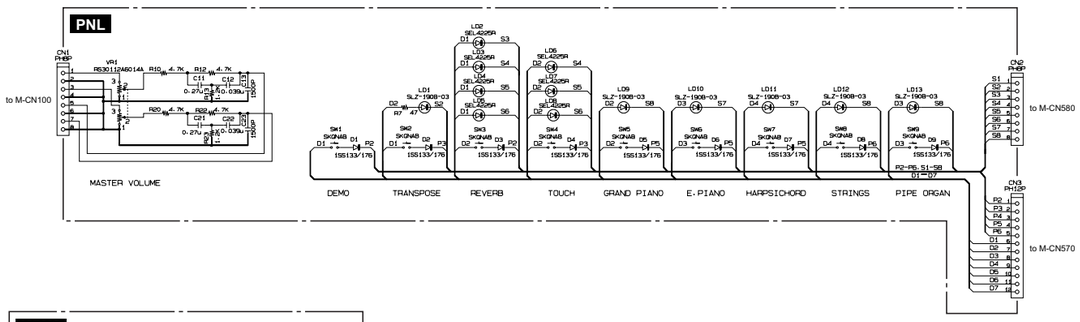

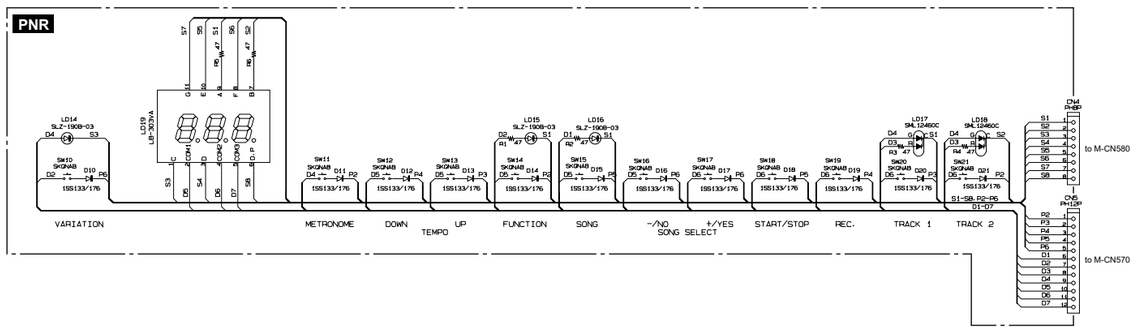

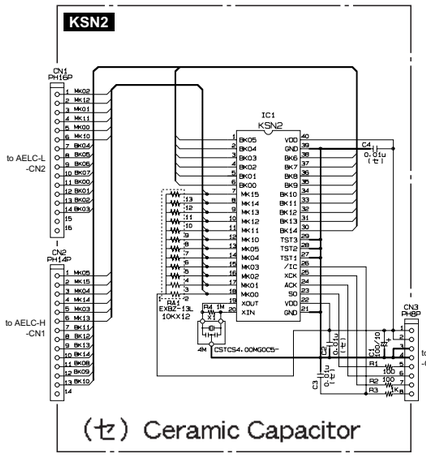

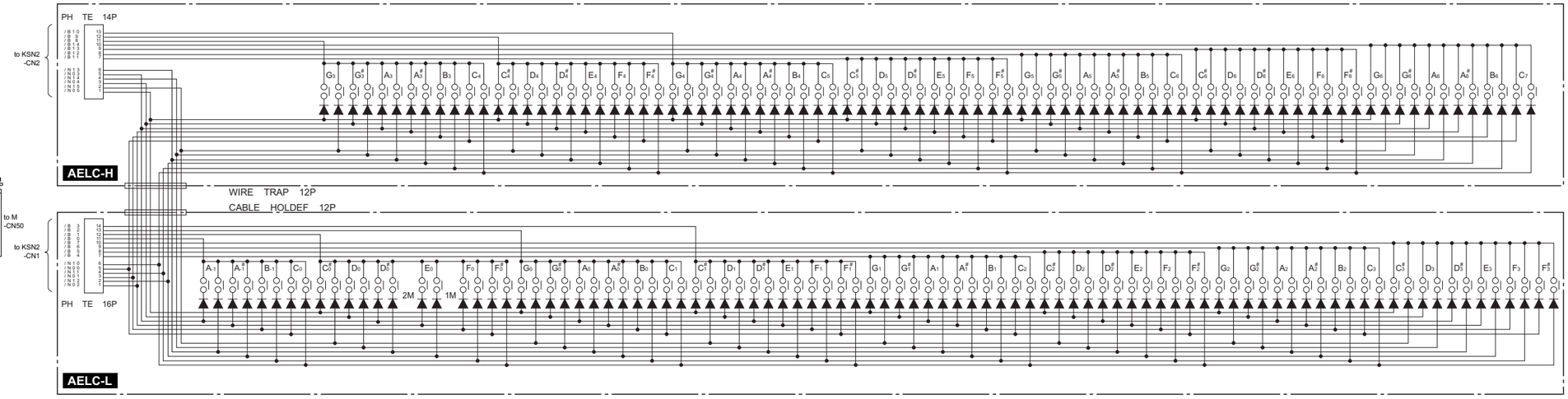

Note :See parts list for details of circuit board component parts.

■ WARNING
Components having special characteristics are marked ⚠ and must be replaced with parts having specification equal to those originally installed.

PNL :28CC1-8812916 ⚠1
PNR :28CC1-8812916 ⚠1
KSN2 :28CC1-8812917 ⚠0
AELC-H :28CC1-8811013
AELC-L :28CC1-8811013