MUSIC SYNTHESIZER

S08

SERVICE MANUAL



■ CONTENTS

SPECIFICATION 3
PANEL LAYOUT 4
UNIT LAYOUT 5
BLOCK DIAGRAM 6
LIST OF IC FUNCTIONS 7/8
WIRING 9
DISASSEMBLY PROCEDURE 10
LSI PIN DESCRIPTION 18
IC BLOCK DIAGRAM 20
CIRCUIT BOARDS 22
TEST PROGRAM 30/37
OS UPDATE 43
CHECK POINT • TROUBLESHOOTING 44
SYSTEM FLOW CHART(After turning on the power) 47/48
DISPLAY MESSAGES 49/50
MIDI IMPLEMENTATION CHART 51
PARTS LIST
OVERALL CIRCUIT DIAGRAM

ECO-PULP

PRINTED WITH SOY INK

Trademark of American Soybean Association

This document is printed on chlorine free (ECF) paper with soy ink.

SY 001674
20020401-158000

YAMAHA
HAMAMATSU, JAPAN
1.499K-0611M Printed in Japan '02.03

IMPORTANT NOTICE

This manual has been provided for the use of authorized Yamaha Retailers and their service personnel. It has been assumed that basic service procedures inherent to the industry, and more specifically Yamaha Products, are already known and understood by the users, and have therefore not been restated.

WARNING: Failure to follow appropriate service and safety procedures when servicing this product may result in personal injury, destruction of expensive components, and failure of the product to perform as specified. For these reasons, we advise all Yamaha product owners that all service required should be performed by an authorized Yamaha Retailer or the appointed service representative.

IMPORTANT: The presentation or sale of this manual to any individual or firm does not constitute authorization, certification or recognition of any applicable technical capabilities, or establish a principle-agent relationship of any form.

The data provided is believed to be accurate and applicable to the unit(s) indicated on the cover. The research, engineering, and service departments of Yamaha are continually striving to improve Yamaha products. Modifications are, therefore, inevitable and changes in specification are subject to change without notice or obligation to retrofit. Should any discrepancy appear to exist, please contact the distributor's Service Division.

WARNING: Static discharges can destroy expensive components. Discharge any static electricity your body may have accumulated by grounding yourself to the ground bus in the unit (heavy gauge black wires connect to this bus).

IMPORTANT: Turn the unit OFF during disassembly and part replacement. Recheck all work before you apply power to the unit.

LITHIUM BATTERY HANDLING

This product uses a lithium battery for memory back-up.

WARNING: Lithium batteries are dangerous because they can be exploded by improper handling. Observe the following precautions when handling or replacing lithium batteries.

- Leave lithium battery replacement to qualified service personnel.
- Always replace with batteries of the same type.
- When installing on the PC board by soldering, solder using the connection terminals provided on the battery cells. Never solder directly to the cells. Perform the soldering as quickly as possible.
- Never reverse the battery polarities when installing.
- Do not short the batteries.
- Do not attempt to recharge these batteries.
- Do not disassemble the batteries.
- Never heat batteries or throw them into fire.

ADVARSEL!
Lithiumbatteri-Eksplosionsfare ved fejlagtig håndtering. Udskiftning må kun ske med batteri af samme fabrikat og type. Levér det brugte batteri tilbage til leverandøren.

VARNING
Explosionsfara vid felaktigt batteribyte.
Använd samma batterityp eller en ekvivalent typ som rekommenderas av apparattillverkaren.
Kassera använt batteri enligt fabrikantens instruktion.

VAROITUS
Paristo voi räjähtää, jos se on virheellisesti asennettu.
Vaihda paristo ainoastaan laitevalmistajan suosittelemaan tyyppiin.
Hävitä käytetty paristo valmistajan ohjeiden mukaisesti.

The following information complies with Dutch Official Gazette 1995. 45; ESSENTIALS OF ORDER ON THE COLLECTION OF BATTERIES.

- Please refer to the diassembly procedure for the removal of Back-up Battery.
- Leest u voor het verwijderen van de backup batterij deze beschrijving.

WARNING: CHEMICAL CONTENT NOTICE!

The solder used in the production of this product contains LEAD. In addition, other electrical/electronic and/or plastic (where applicable) components may also contain traces of chemicals found by the California Health and Welfare Agency (and possibly other entities) to cause cancer and/or birth defects or other reproductive harm.

DO NOT PLACE SOLDER, ELECTRICAL/ELECTRONIC OR PLASTIC COMPONENTS IN YOUR MOUTH FOR ANY REASON WHATSOEVER!

Avoid prolonged, unprotected contact between solder and your skin! When soldering, do not inhale solder fumes or expose eyes to solder/flux vapor!

If you come in contact with solder or components located inside the enclosure of this product, wash your hands before handling food.

■ SPECIFICATIONS

KEY BOARD	88 keys with Initial Touch(Balanced Hammer Effect Keyboard)		
TONE GENERATOR	AWM2		
POLYPHONY	64 notes		
MULTI TIMBRE	16		
WAVE	521 waveforms		
VOICE	Normal Voice	Preset	128
		User	128
		GM2/XG	493
	Drum Voice	User	2
		GM2/XG	29(including 8 Original Voices)
MULTI		User	32
EFFECT	Reverb		17
	Chorus		17
	Variation		54
SQUENCE PLAY	SMF Format 0(Direct Play only)		
EXTERNAL MEMORY	SmartMedia™(3.3 V) *Up to 128 MB can be used.		
CONTROLS	STANDBY/ON, VOLUME, Pitch Bend wheel, Modulation wheel, VOICE, MULTI, SEQ PLAY, UTILITY, CONTROLLER, CARD, EDIT/COMPARE, JOB, STORE(PLAY/STOP), EXIT, ◄ /►, ▲ /▼,PART(ELEMENT/KEY) +/-, MUTE, INC/YES, DEC/NO, PRESET, USER, GM2/XG, CATEGORY SEARCH, Nummeric Keypad, ENTER, Data dial		
CONNECTORS & TERMINALS	PHONES(Stereo Phone), OUTPUT(Phone): L(MONO)/R, DC IN, FOOT CONTROLLER, FOOT SWITCH, MIDI IN/OUT/THRU, USB, Card slot		
DISPLAY	LCD (Back Light)		
ACCESSORIES	PA-5C or PA-5D (European model) AC Adaptor, CD-ROM		
POWER CONSUMPTION	8 W		
MAXIMUM OUTPUT LEVEL	OUTPUT: + 9 ± 2 dBm(10 kΩ), PHONES: + 0 ±2 dBm(33 Ω)		
DIMENSIONS	1323 (W) x 389 (D) x 159 (H) mm		
WEIGHT	19.8 kg		

■ PANEL LAYOUT

•Top Panel

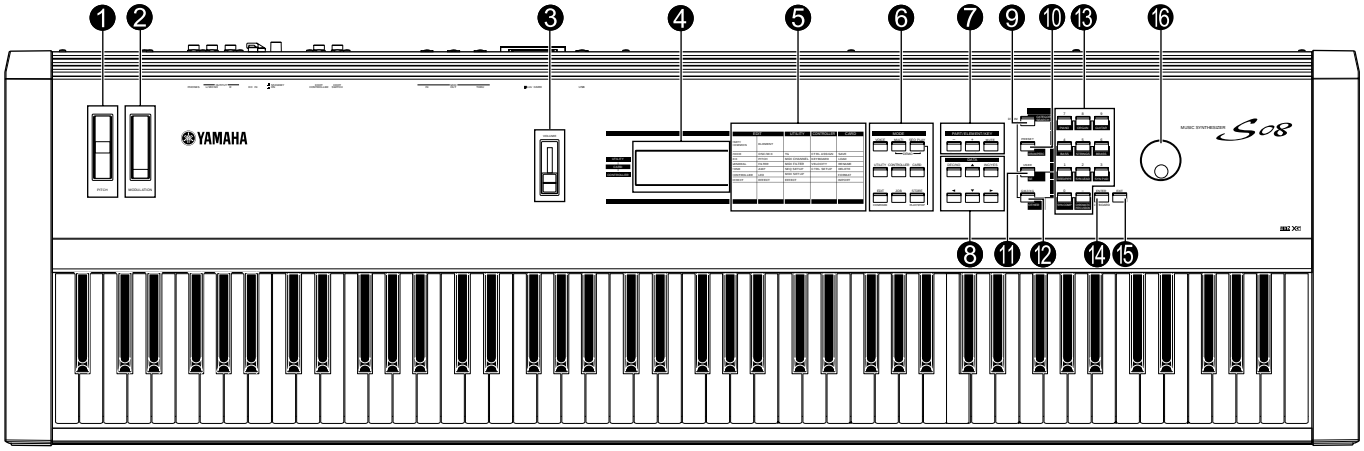

❶ **PITCH bend wheel**
❷ **MODULATION wheel**
❸ **[VOLUME] Slider**
❹ **LCD**
❺ **Parameter Type List**
❻ **MODE buttons**
❼ **[PART/ELEMENT/KEY] buttons**
- ❼**-1 [+]/[-] buttons**
- ❼**-2 [MUTE] button**

❽ **DATA buttons**
- ❽**-1 [DEC/NO] button**
- ❽**-2 [INC/YES] button**
- ❽**-3 [▲]/[▼] buttons**
- ❽**-4 [◄]/[►] buttons**

❾ **[CATEGORY SEACH/DRUM] button**
❿ **[PRESET/(DRUM/PERC)] button**
⓫ **[USER/(SE)] button**
⓬ **[GM2/XG/(OTHER)] button**
⓭ **Numeric keypad**
⓮ **[ENTER/KEYBOARD] button**
⓯ **[EXIT] button**
⓰ **Data Dial**

•Rear Panel

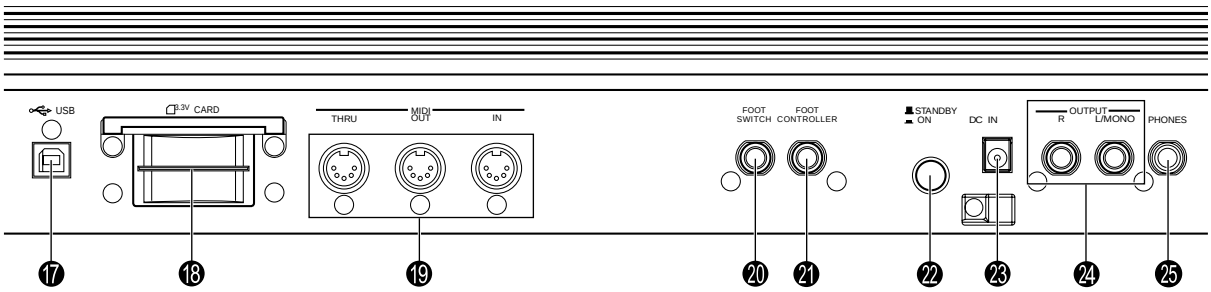

⓱ **USB terminal**
⓲ **Memory Card slot**
⓳ **MIDI IN/OUT/THRU terminals**
⓴ **FOOT SWITCH jack**
㉑ **FOOT CONTROLLER jack**
㉒ **STANDBY/ON switch**
㉓ **DC IN terminal**
㉔ **OUTPUT L/MONO and R jack**
㉕ **PHONES jack**

■ UNIT LAYOUT

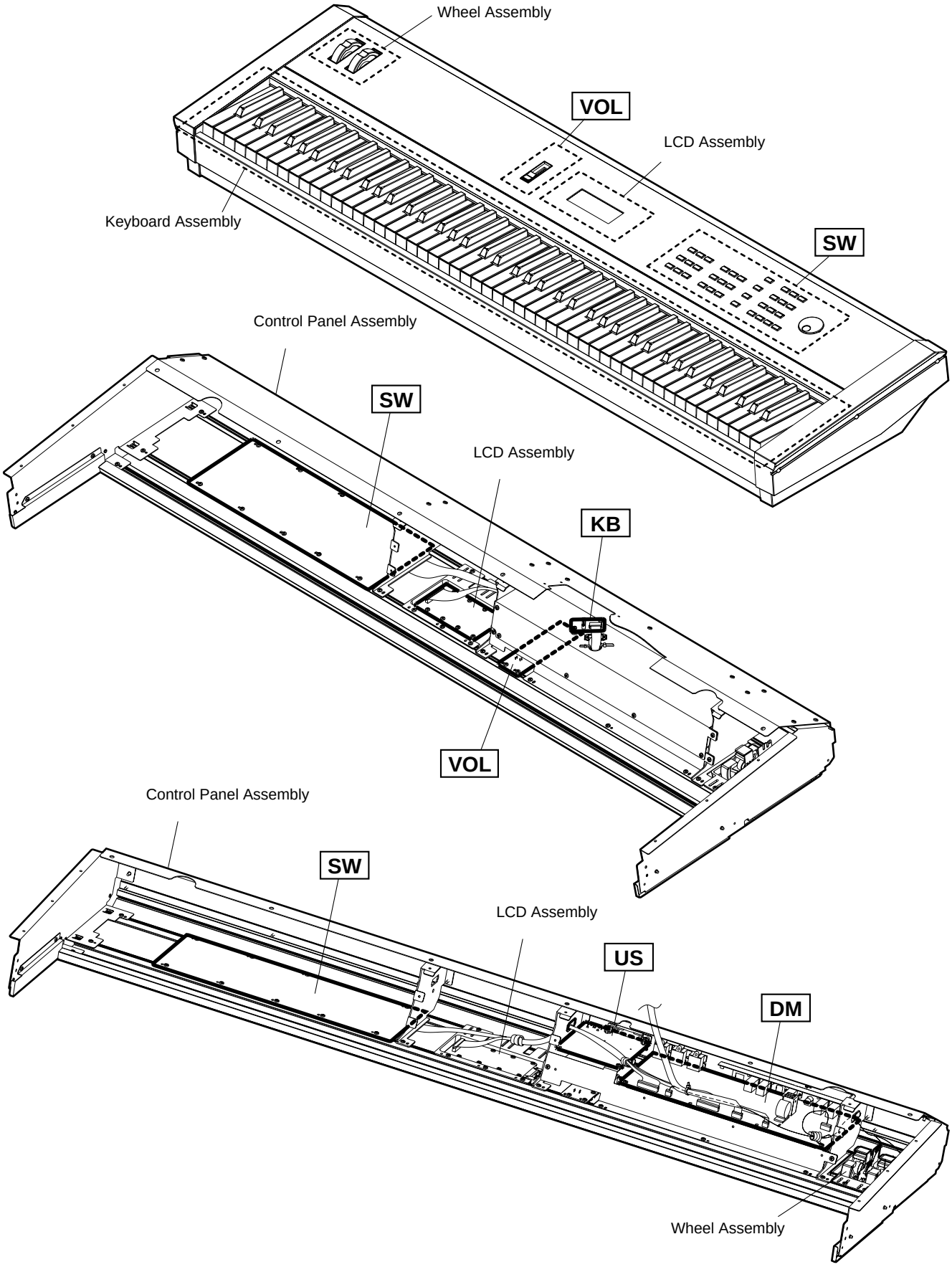
Wheel Assembly
VOL
LCD Assembly
Keyboard Assembly
SW
Control Panel Assembly
SW
LCD Assembly
KB
VOL
Control Panel Assembly
SW
LCD Assembly
US
DM
Wheel Assembly

■ BLOCK DIAGRAM

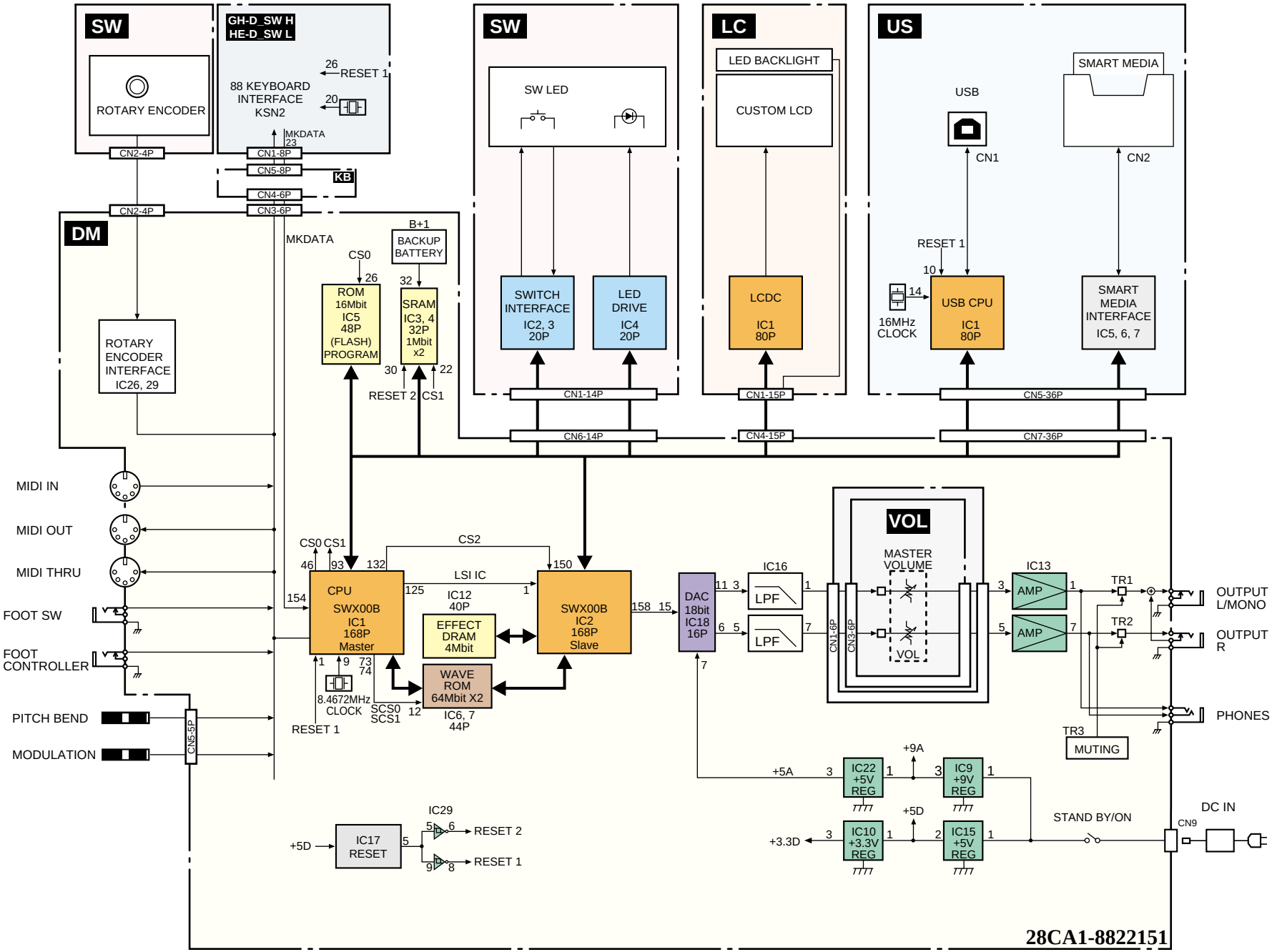

■ LIST OF IC FUNCTIONS

Circuit Board	IC No	FUNCTION		USE
DM	IC01	SWX00B	Master (Separate Mode)	CPU (system control) + sound source
	IC02	SWX00B	Slave (Sigle mode)	Sound source
	IC03	SRAM 1M (UPPER)	Upper	SRAM for work/for backup
	IC04	SRAM 1M (LOWER)	Lower	SRAM for work/for backup
	IC05	FLASH ROM 16MB		ROM for system control program
	IC06	MASK ROM 64MB	ROM1	WAVE ROM L
	IC07	MASK ROM 64MB	ROM2	WAVE ROM H
	IC08	--	--	--
	IC09	REGULATOR		DC Regulator + 12V→+9V (for analog use)
	IC10	REGULATOR		DC Regulator +5V→ +3.3V (for digital use)
	IC11	--	--	--
	IC12	DRAM 4MB	DSP	DSP temporary data (for EFFECT)
	IC13	OP AMP		Power amplification (low-impedance drive)
	IC14	--	--	--
	IC15	REGULATOR		DC Regulator +12V→ +5V (for digital use)
	IC16	OP AMPPROGRAM		Active filter (LPF)
	IC17	RESET		System reset
	IC18	DAC		D/A Converter (OUTPUT/PHONES)
	IC19	OP AMP		DC power (analog)
	IC20	OP AMP		DC power 3.3V→+1.65V (for digital use)
	IC21	Analog Switch		For battery detection
	IC22	REGULATOR		DC Regulator 9V→ +5V (for DAC)
	IC23	Photo Coupler	MIDI IN	MIDI inport (photoelectric transfer)
	IC24	CMOS Gate	Inverter	MIDI OUT/THRU drive
	IC25	--	--	--
	IC26	CMOS Gate	D-FF	Rotary encoder input waveform shaping
	IC27	CMOS Gate	Transceiver	Data (two-way)
	IC28	CMOS Gate	Decoder	Address Decoder (chip select)
	IC29	CMOS Gate	Inverting Schumitt Trigger	Reset of system for rotary encoder input waveform shaping system
	IC30	CPU (8MHz)	SIO4	4ch Serial I/O interface
	IC31	CMOS Gate	OR (Buffer)	Buffer for HWR2, CRD2
	IC32	CMOS Gate	D-FF	Logic for SIO4 control signal generation
	IC33	CMOS Gate	OR	Logic for SIO4 control signal generation
USB	IC01	USB CPU	FLASH	USB available microcomputer
	IC02	CMOS Gate	OR	For Smart Media control
	IC03	CMOS Gate	OR	For Smart Media control
	IC04	CMOS Gate	INVERTER	For Smart Media control
	IC05	CMOS Gate	TRANSCEIVER	For Smart Media control
	IC06	CMOS Gate	BUFFER	For Smart Media control
	IC07	CMOS Gate	D-FF	For Smart Media control
	IC08	CMOS Gate	OR	For USB microcomputer control

■ WIRING

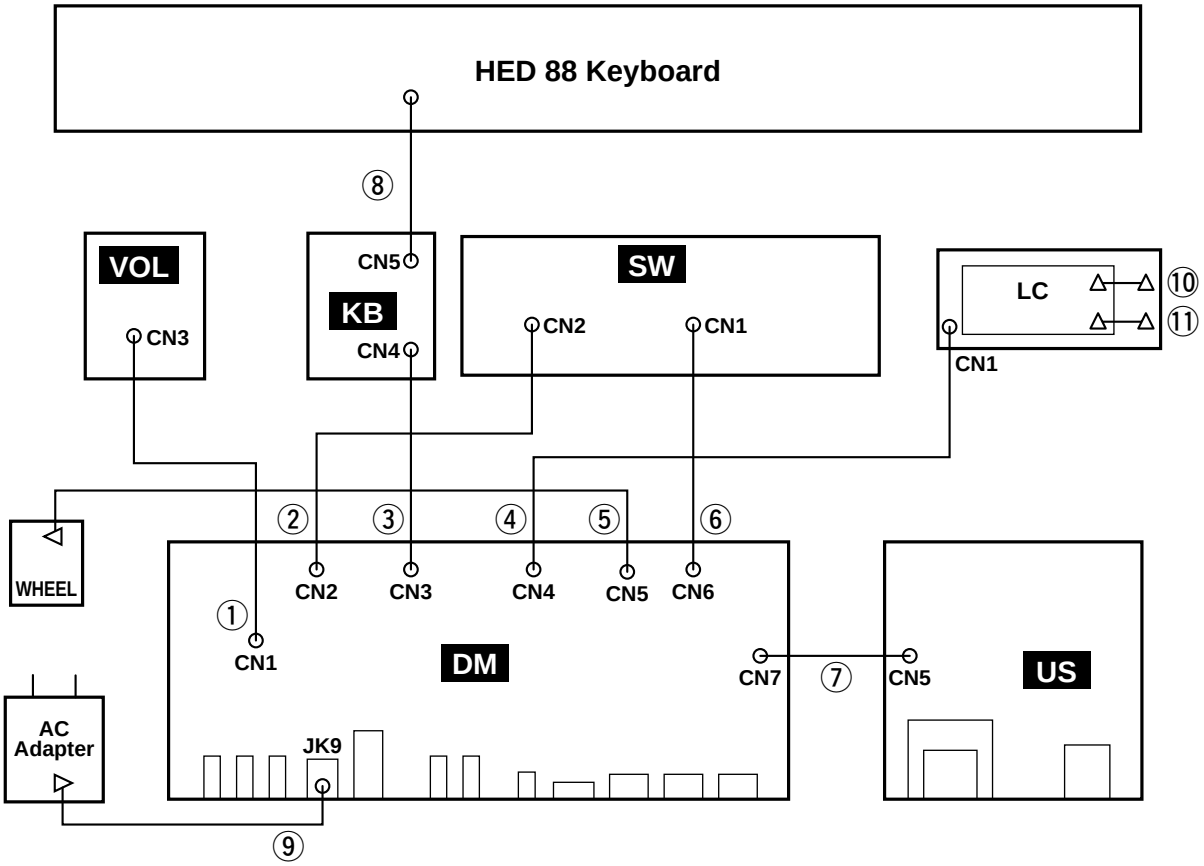

Location	Part No.	Description	Destination		REMARKS
①	V8626300	Shield Connector Assembly	DM-CN1	VOL-CN3	6P-550L
②	V8795500	Cable Assembly	DM-CN2	SW-CN2	4P
③	V8795600	Cable Assembly	DM-CN3	KB-CN4	6P
④	(VK11300)	KRD-KRD Connector Assembly	DM-CN4	LC-CN1	15P-500L
⑤	(V875590)	WHEEL Connector Assembly	DM-CN5	Wheel Assembly	5P-140L+X
⑥	VK111600	KRD-KRD Connector Assembly	DM-CN6	SW-CN1	14P-450L
⑦	MF136120	CARD Connector Assembly C&C	DM-CN7	US-CN5	36P 120mm P=1.25
⑧	VK109800	KRD-KRD Connector Assembly	Keyboard Assembly	KB-CN5	8P-400L
⑨	VU113800	AC Adapter	AC Adapter	DM-JK9	J
	VU113700	AC Adapter	AC Adapter	DM-JK9	U
	V8029200	AC Adapter	AC Adapter	DM-JK9	E
⑩	(V675990)	Wire	LC	Back Light Assembly	1P
⑪	(V676000)	Wire	LC	Bsck Light Assembly	1P

※ ( ): Not Registration

■ DISASSEMBLY PROCEDURE

Caution: Be sure to attach the removed filament tape just as it was before removal.

1. Control Panel Assembly

(Time required: about 5 minutes)

1-1 Remove the four (4) screws marked [146], and then remove the cover. KRD-KRD Connector Assembly can then be removed from CN4 on the KB circuit board. (Fig. 1)

1-2 Put the main unit upright with the front rail downward. Remove the six (6) screws marked [140A], the six (6) screws marked [140B], the one (1) screw marked [150]. Then put back the main unit to the original position. (Fig. 1)(Photo. 1)

1-3 Remove the three (3) screws marked [130]. Then remove the side cover R and the two (2) screws marked [100]. Likewise, remove the side cover L and the control panel assembly. (Fig. 1)*

* If the control panel assembly is held up with the connector attached on the KB circuit board, the circuit board and wiring may be damaged. Before removing the control panel assembly, be sure to check that the KRD-KRD Connector Assembly is disconnected on the KB circuit board.

* When putting the main unit upright, take care not to allow it to fall down.

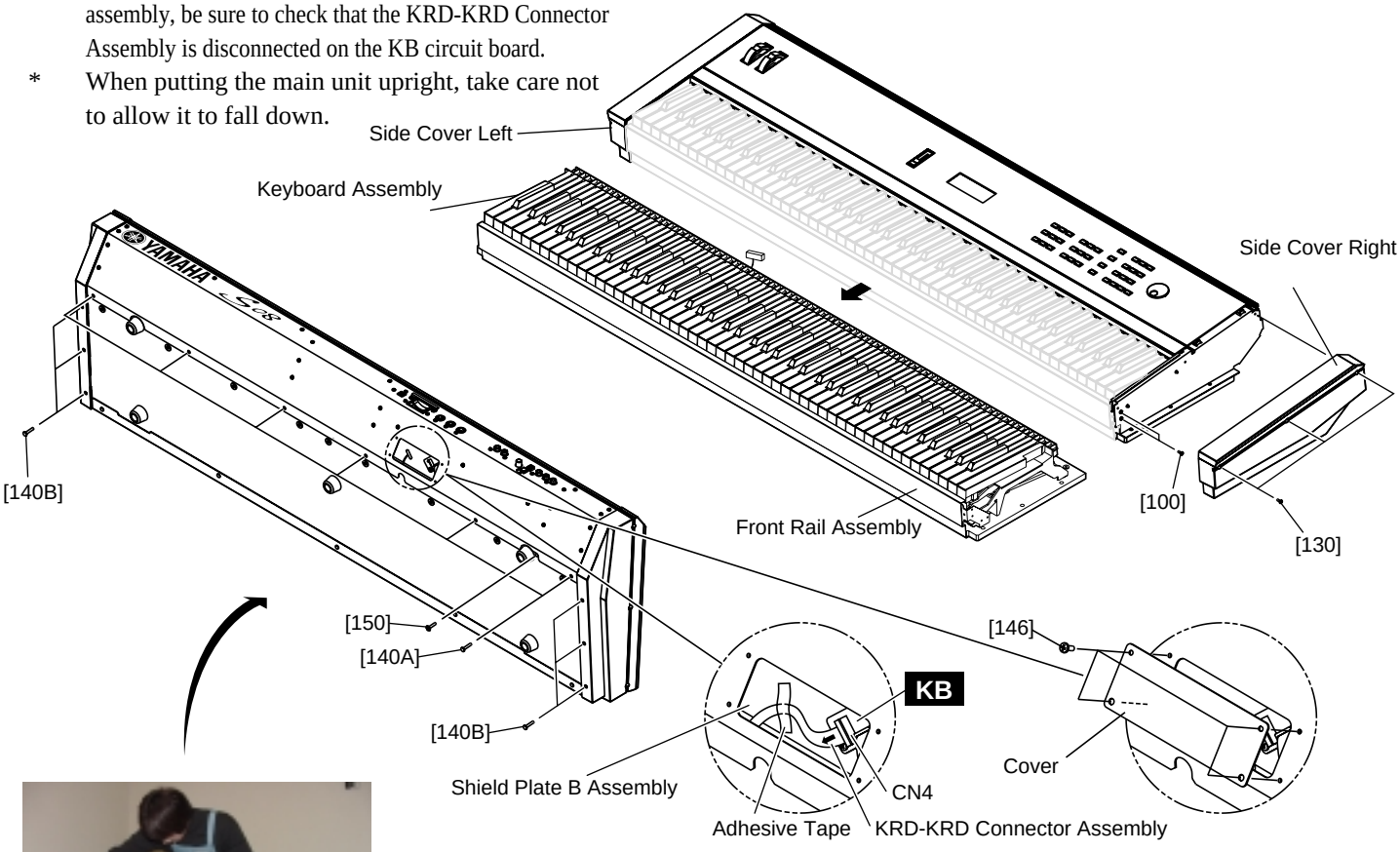

[100]: Bind Head Tapping Screw-B 3.0X8 MFZN2BL (EP600190)
[130]: Bind Head Tapping Screw-B 3.0X8 MFZN2BL (EP600190)
[140A]: Bind Head Screw 4.0X20 MFZN2BL (VB934000)
[140B]: Bind Head Screw 4.0X20 MFZN2BL (VB934000)
[146]: Bind Head Tapping Screw-B 3.0X8 MFZN2BL (EP600190)
[150]: Cup Screw 4.0X18 MFZL2Y (VK348200)

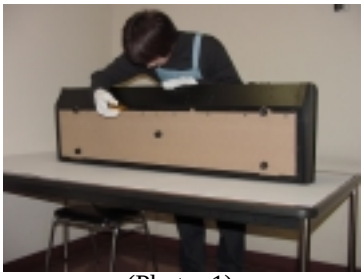

(Photo. 1)

(Fig. 1)

2. DM Circuit Board & US Circuit Board
(Time required: about 10 minutes)

2-1 Remove the control panel assembly. (See Procedure 1.)

2-2 Remove the nine (9) screws marked [300] and the CN4 connector on the KB circuit board. The shield plate B assembly can then be removed. (Fig. 2)
Remove the nine (9) screws marked [260] and the four (4) screws marked [280]. Then remove the DM circuit board & US circuit board. (Fig. 3)

* For reinstallation, pass the KRD-KRD Connector Assembly through the ferrite core from underneath and pass it over the bush. (Fig. 2-1)
Again pass the harness through the ferrite core from underneath and connect it to the CN4 connector. (Fig. 2-2)

3. KB Circuit Board (Time required: about 10 minutes)

3-1 Remove the control panel assembly. (See Procedure 1.)

3-2 Remove the rear panel assembly. (See Procedure 2.)

3-3 Removed the two (2) screws marked [60]. The KB circuit board can then be removed. (Fig. 2)

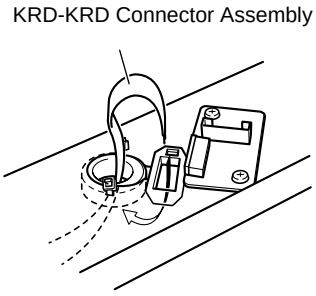

(Fig. 2-1)

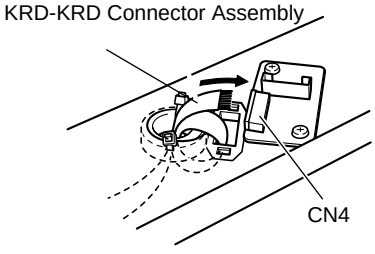

(Fig. 2-2)

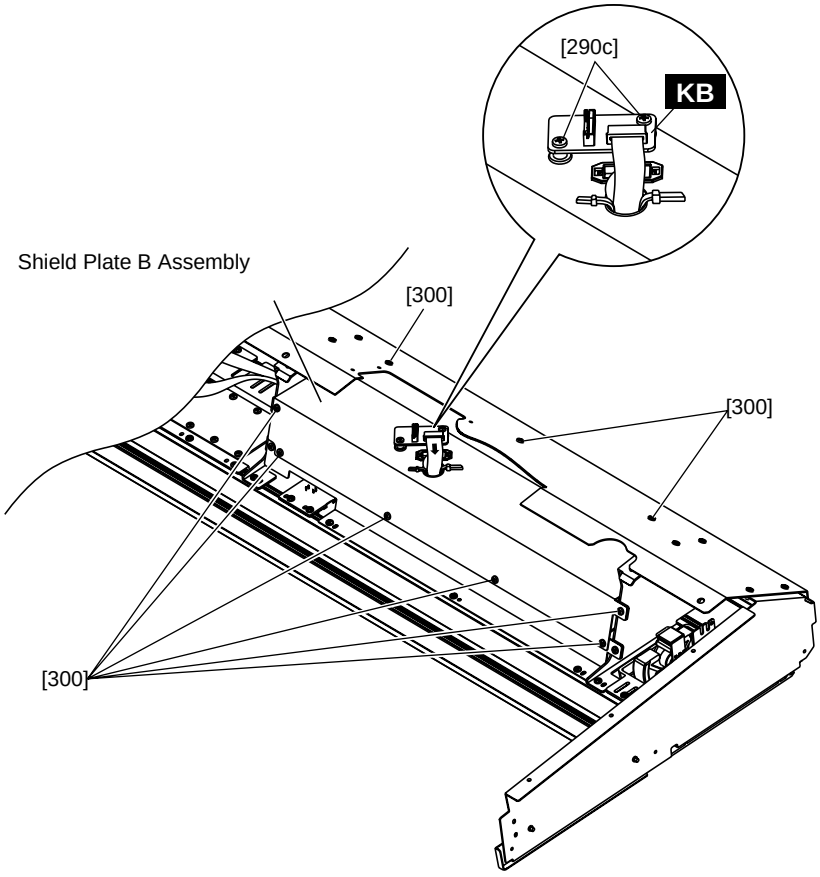

[290c]: Bind Head Tapping Screw-B 3.0X6 MFZN2BL (EP600230)
[300]: Bind Head Tapping Screw-B 3.0X8 MFZN2BL (EP600190)

(Fig. 2)

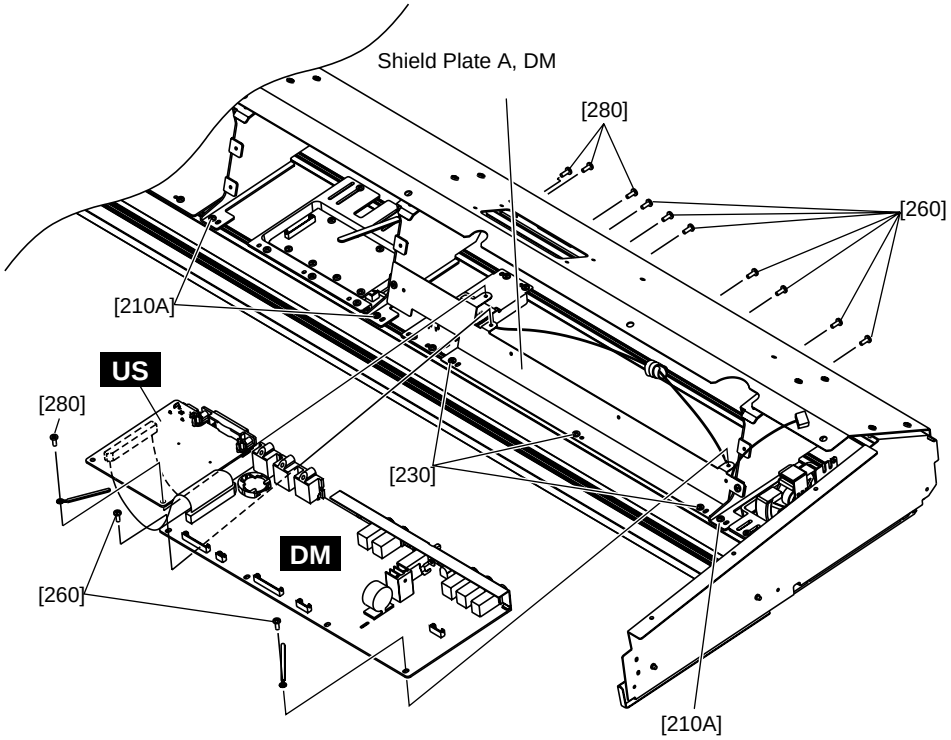

- Exchange of a lithium battery

LITHIUM BATTERY
(VN103500)
VN103600(Battery holder for VN103500)

Push the battery as shown in figure 3-1, then the battery will pop up.

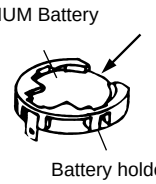

(Fig. 3-1)

[210]: Bind Head Tapping Screw-B 3.0X8 MFZN2BL (EP600190)
[230]: Bind Head Tapping Screw-B 3.0X6 MFZN2BL (EP600230)
[260]: Bind Head Tapping Screw-B 3.0X8 MFZN2BL (EP600190)
[280]: Bind Head Tapping Screw-B 3.0X8 MFZN2BL (EP600190)

(Fig. 3)

4. Rear Panel Assembly

(Time required: about 20 minutes)

4-1 Remove the control panel assembly. (See Procedure 1.)

4-2 Remove the DM circuit board & US circuit board. (See Procedure 2.)

4-3 Remove the three (3) screws marked [230]. The rear panel assembly can then be removed. (Fig. 3, 4)

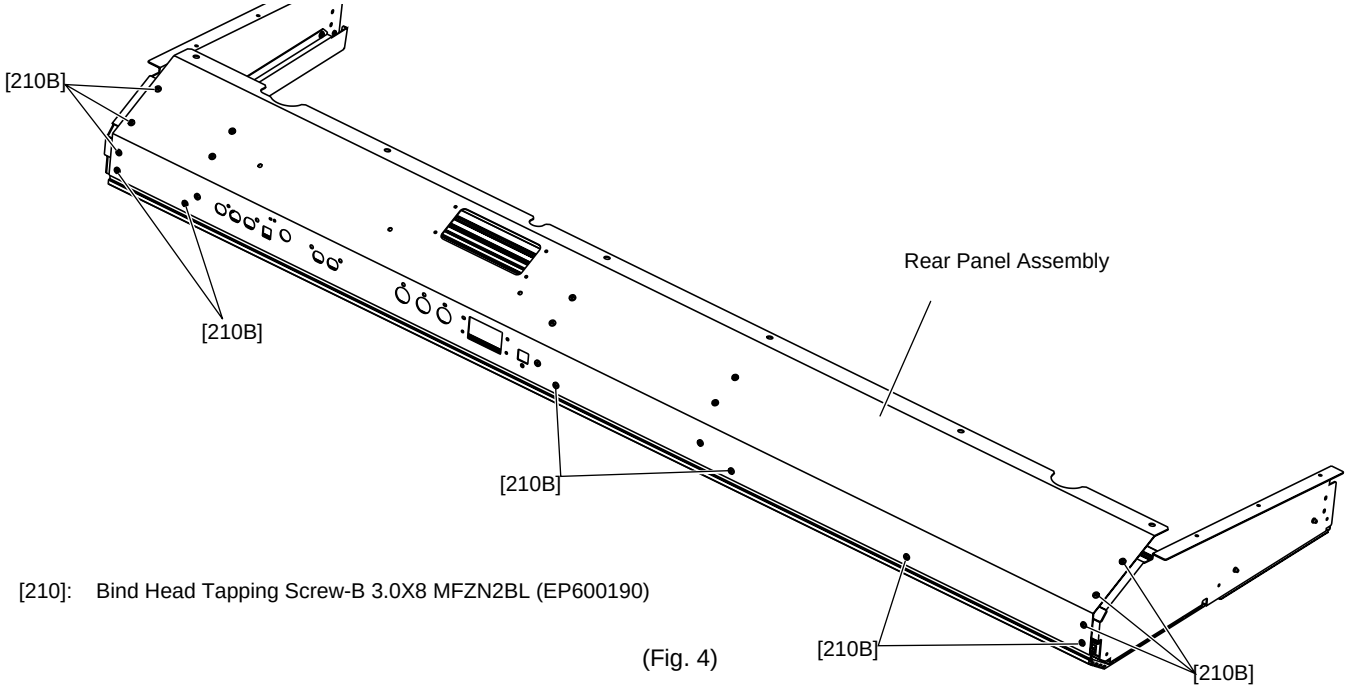

[210]: Bind Head Tapping Screw-B 3.0X8 MFZN2BL (EP600190)

(Fig. 4)

5. SW Circuit Board (Time required: about 25 minutes)

5-1 Remove the control panel assembly. (See Procedure 1.)
5-2 Remove the rear panel assembly. (See Procedure 4.)
5-3 Remove the nine (9) screws marked [60]. The SW circuit board can then be removed.
* When installing SW circuit board, take care not to pinch and damage the CN2 cable assembly. (Fig. 5-1)

6. VOL Circuit Board (Time required: about 25 minutes)

6-1 Remove the control panel assembly. (See Procedure 1.)
6-2 Remove the rear panel assembly. (See Procedure 4.)
6-3 Remove the four (4) screws marked [160].
* When installing the VOL circuit board, slide the volume knob up and down with the VOL circuit board in contact with the VOL circuit board fixture and check that it moves smoothly. Then secure the circuit board with the screws. (Fig. 5)

7. LCD Circuit Board (Time required: about 25 minutes)

7-1 Remove the control panel assembly. (See Procedure 1.)
7-2 Remove the rear panel assembly. (See Procedure 4.)
7-3 Remove the six (6) screws marked [110]. The LC circuit board can then be removed. (Fig. 5)

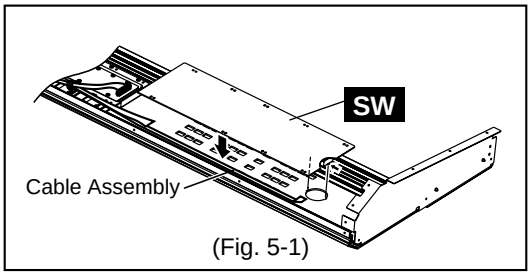

(Fig. 5-1)

[60]: Bind Head Tapping Screw-B 3.0X8 MFZN2BL (EP600190)
[80]: Bind Head Tapping Screw-B 3.0X8 MFZN2BL (EP600190)
[110]: Bind Head Tapping Screw-B 3.0X8 MFZN2BL (EP600190)
[160]: Bind Head Tapping Screw-B 3.0X8 MFZN2BL (EP600190)
[162]: Bind Head Tapping Screw-B 3.0X6 MFZN2BL (EP600230)

(Fig. 5)

8. LC Circuit Board (Time required: about 30 minutes)

8-1 Remove the control panel assembly. (See Procedure 1.)
8-2 Remove the rear panel assembly. (See Procedure 4.)
8-3 Remove the LCD assembly. (See Procedure 7.)
8-4 Remove the eight (8) screws marked [60]. The LC circuit board can then be removed. (Fig. 6)

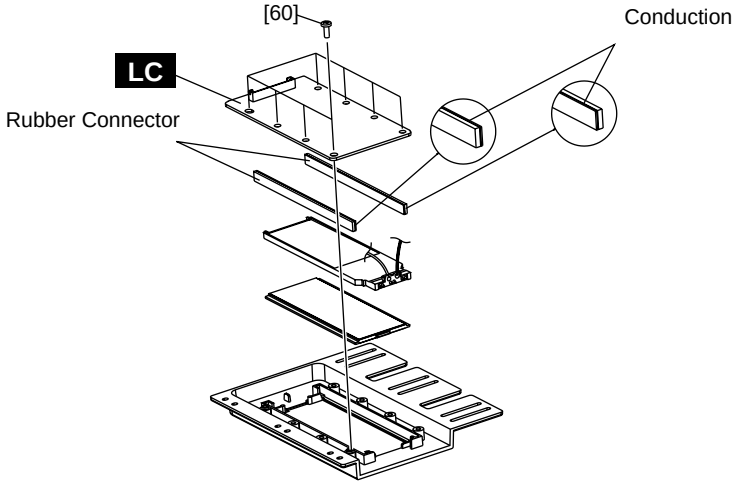

[60]: Bind Head Tapping Screw-P 3.0X8 MFZN2Y (EP600280)
(Fig. 6)

9. Wheel assembly 683 (Time required: about 30 minutes)

9-1 Remove the control panel assembly. (See Procedure 1.)
9-2 Remove the rear panel assembly. (See Procedure 4.)
9-3 Remove the four (4) screws marked [80]. The wheel assembly 683 can then be removed. (Fig. 5)

10. Wheel assembly (Time required: about 32 minutes)

10-1 Remove the control panel assembly. (See Procedure 1.)
10-2 Remove the rear panel assembly. (See Procedure 4.)
10-3 Remove the wheel assembly. (See Procedure 9.)
10-4 Remove the four (4) screws marked [30]. The wheel assembly can then be removed. (Fig. 7)

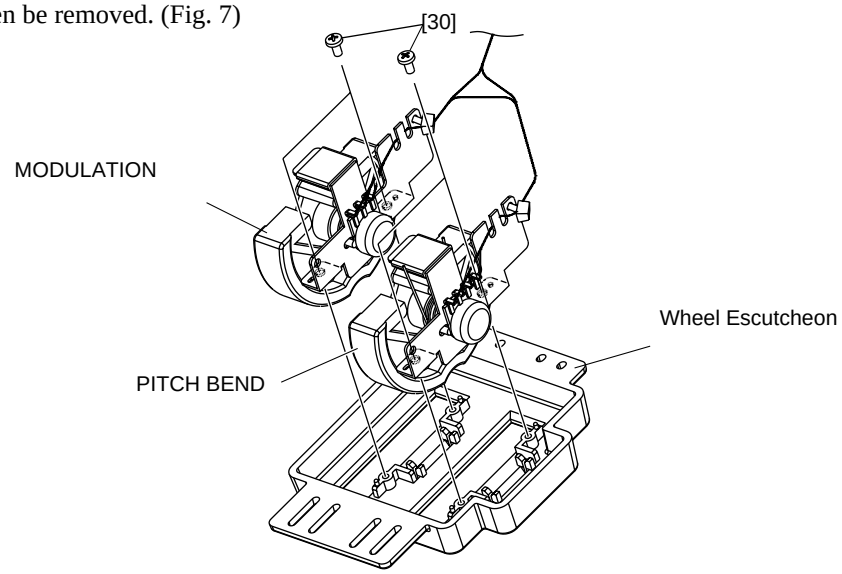

[30]: Bind Head Tapping Screw-B 3.0X6 MFZN2BL (EP600230)
(Fig. 7)

11. HED Keyboard Assembly

(Time required: about 25 minutes)

11-1 Remove the control panel assembly. (See Procedure 1.)

11-2 Remove the nine (9) screws marked [70] and the two (2) screws marked [80]. The HED keyboard assembly can then be removed. (Fig. 8, Fig. 9)

* When installing the HED keyboard assembly, balance the low-and high-note white keys in location with the front rail as a guide. The HED keyboard assembly can then be installed.

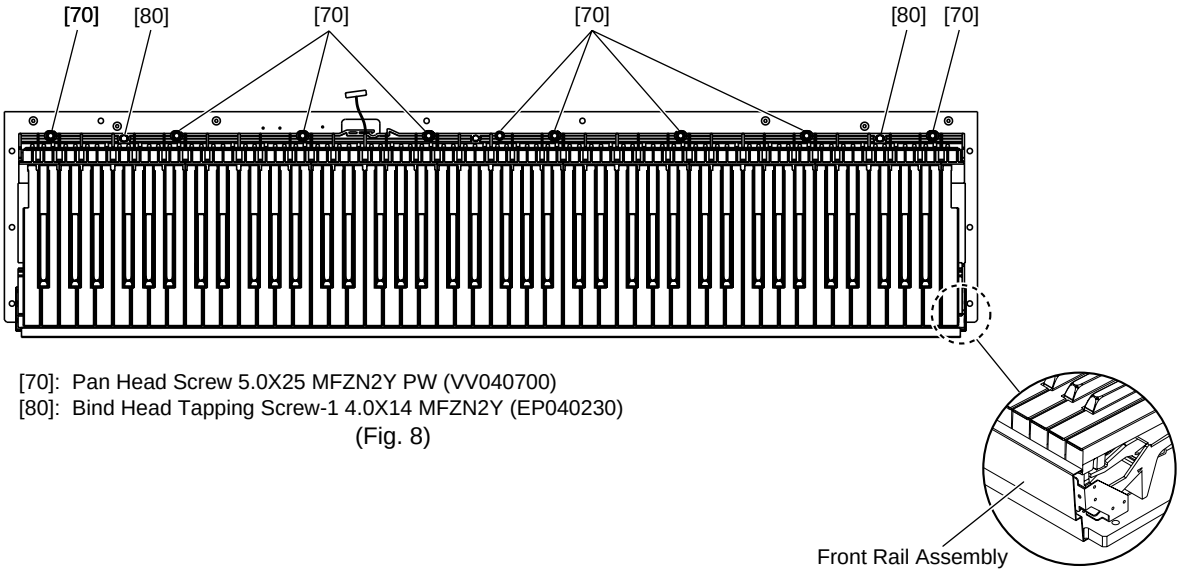

[70]: Pan Head Screw 5.0X25 MFZN2Y PW (VV040700)
[80]: Bind Head Tapping Screw-1 4.0X14 MFZN2Y (EP040230)

(Fig. 8)

(Fig. 8-1)

12. Disassembly of HED Keyboard Assembly

(Time required: about 50 minutes)

* Before removing the circuit board, insert a rod (Rod: TX000670) between the frame and the hammer so as not to distort the seesaw dome (rubber contact). (Fig. 11)

12-1 Remove the control HED keyboard assembly. (See Procedure 11.)

12-2 HE-D_SW Circuit Board L
Remove the seven (7) screws marked [260a]. The HE-D_SW circuit L board can then be removed. (Fig. 9)

12-3 GH-D_SW Circuit Board H
Remove the ten (10) screws marked [260b]. The HE-D SW circuit H board can then be removed. (Fig. 9)

* The white key and black key can be removed without removing the HE-D_SW circuit board L and the GH-D SW circuit board H.

* Remove the HE-D_SW circuit board L and GH-D SW circuit board H. The seesaw dome (rubber contact) can then be removed.

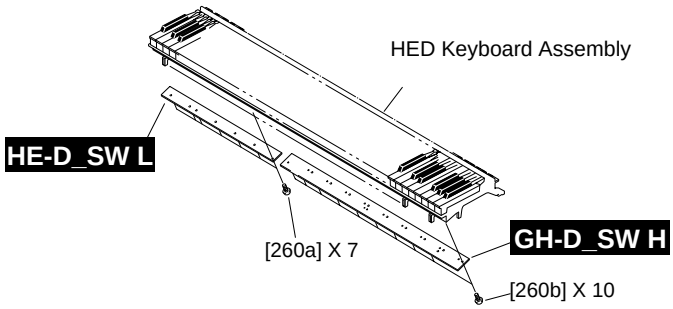

[260a]: Bind Head Tapping Screw-P 3.0X10 MFZN2 (VT413400)
[260b]: Bind Head Tapping Screw-P 3.0X10 MFZN2 (VT413400)
(Fig. 9)

12-4 White key

Insert a thin plate between the keyboards (in the space pointed at by the triangle mark near the white key fulcrum).

Push down the stopper marked [A] and move forward the white key until the white keyboard hook is released. The white key can then be removed by holding it up. (Figs. 10, 11)

* While doing the above step, take enough care not to move the white key so far forward to damage the spring.

* The black key can be removed by removing the white keys on both sides.

12-5 Hammer white key

This key can be unhooked by removing the white key and then by pushing down the spring. (Fig. 12)

Turn the GHD keyboard over. Remove the hammer white key by peeling off the stopper L88_W. (Fig. 13)

* The hammer black key can be removed by following the same procedure as for the white key.

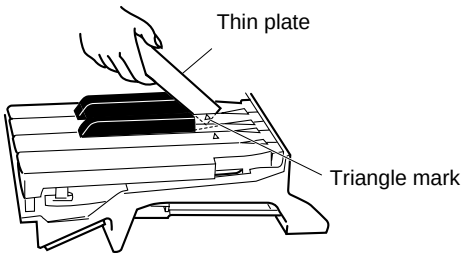

(Fig. 10)

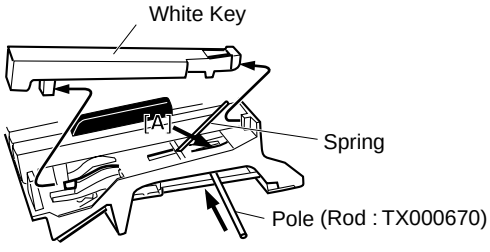

(Fig. 11)

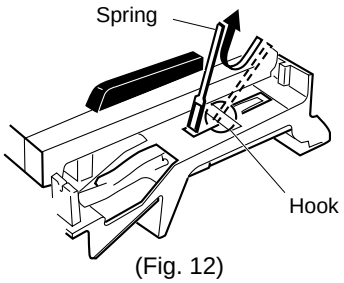

(Fig. 12)

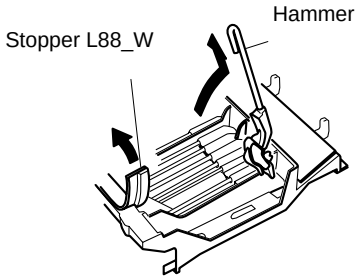

(Fig. 13)

13. HED Keyboard Assembly

(Time required: about 30 minutes)

13-1 Hammer white key (black key)

Insert the hammer white key (black key) into the frame on the back of the HED keyboard and attach the stopper L88_W. Remove from the main unit. (Fig. 14)

13-2 Spring

With the HED keyboard on the top side, push down the two ends of the spring in alignment with the cut in the hammer white key (black key) and attach it to the frame hook. (Fig. 15)

* Be careful of the direction of the spring. The spring is shaped like "<". Attach it so that its top looks like "^".

13-3 White key (black key)

With the white key (black key) caught in the area [B] and key guide, check that the spring is securely located in the spring receptacle inside the keyboard fulcrum. Then slowly push in the top of [C] in the downward direction and install. (Fig. 16)

13-4 HE-D_SW circuit board L

Fit the seesaw dome (rubber contact) in the slit on the back of the frame and attach the seven (7) screws marked [260a]. The HE-D_SW circuit board L can then be installed. (Fig. 9)

13-5 GH-D_SW circuit board H

Fit the seesaw dome (rubber contact) in the slit on the back of the frame and attach the ten (10) screws marked [260b]. The HE-D_SW circuit board L can then be installed. (Fig. 9)

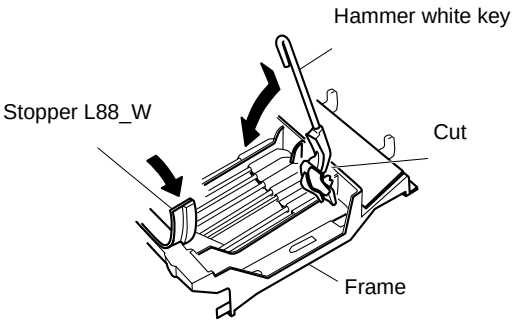

(Fig. 14)

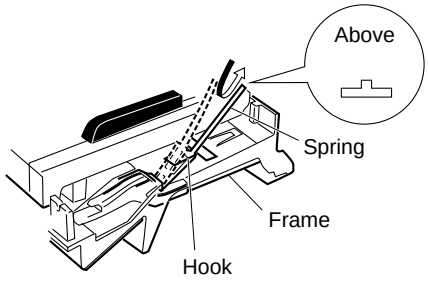

(Fig. 15)

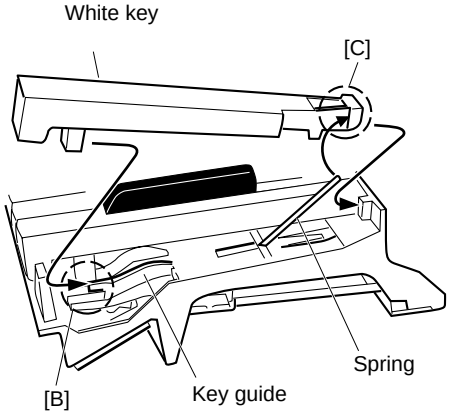

(Fig. 16)

■ LSI PIN DESCRIPTION

CONTENTS

HG73C205AFD	XU947C00	**SWX00B**	Page 18
UPD63200GS-E1	XP867A00	**DAC**	Page 19
MBCG46183-129PFV-G	XV833A00	**SIO4**	Page 19
YMZ702-D	XR632A00	**KSN2**	Page 19

● HG73C205AFD (XU947C00) SWX00B TONE GENERATOR

DM: IC101

PIN No.	NAME	I/O	FUNCTION	PIN No.	NAME	I/O	FUNCTION
1	ICN	I	Initial clear	85	CMA3	O	
2	RFCLKI	I	PLL Clock	86	CMA8	O	
3	TM2	I	PLL Control	87	CMA2	O	
4	AVDD_PLL		Power supply	88	CRD	O	read signal
5	AVSS_PLL		Ground	89	CMA1	O	Program address bus
6	MODE0	I	SWX dual mode	90	CUB	O	high byte effective signal
7	VCC7		Power supply	91	VCC91		Power supply
8	GND8		Ground	92	GHND92		Ground
9	XIN	I	crystal oscillator	93	CS1	O	CS signal
10	XOUT	O	crystal oscillator	94	CMA0	O	Program address bus
11	MODE1	I	SWX separate mode	95	CLB	O	low byte effective signal
12	TEST0	I	TEST pin	96	CMA12	O	
13	TESTON	I	TEST pin	97	CMA11	O	Program address bus
14	AN0-P40	I		98	CMA10	O	
15	AN1-P41	I	A/D converter	99	CMA9	O	
16	AN2-P42	I		100	GND100		Ground
17	AN3-P43	I		101	CWE	O	write signal
18	AVDD_AN		Power supply	102	CMA16	O	
19	AVSS_AN		Ground	103	CMA15	O	Program address bus
20	TXD0	O	for MIDI or TO-HOST	104	CMA14	O	
21	TXD1	O	for MIDI	105	CMA13	O	
22	EXCLK	I	Crystal oscillator	106	CMD8	I/O	
23	SMD11	I/O		107	CMD7	I/O	
24	SMD4	I/O		108	CMD9	I/O	
25	SMD3	I/O		109	CMD6	I/O	
26	SMD12	I/O		110	CMD10	I/O	
27	SMD10	I/O		111	CMD5	I/O	
28	SMD5	I/O	Wave memory data bus	112	CMD11	I/O	Program memory Data bus
29	SMD2	I/O		113	CMD4	I/O	
30	SMD13	I/O		114	CMD12	I/O	
31	SMD9	I/O		115	CMD3	I/O	
32	SMD6	I/O		116	CMD13	I/O	
33	SMD1	I/O		117	CMD2	I/O	
34	SMD14	I/O		118	CMD14	I/O	
35	VCC35		Power supply	119	VCC119		Power supply
36	GND36		Ground	120	GND115		Ground
37	SMD8	I/O		121	CMD1	I/O	
38	SMD7	I/O	Wave memory data bus	122	CMD15	I/O	Program address bus
39	SMD0	I/O		123	CMD0	I/O	
40	SMD15	I/O	read signal	124	CMA21	O	
41	SOE	O	write signal	125	PDT15	I/O	
42	SWE	O	RAS signal	126	PDT14	I/O	
43	SRAS	O	CAS signal	127	PDT13	I/O	
44	SCAS	O	REFRESH signal	128	PDT12	I/O	
45	REFRESH	O	CS signal	129	PDT11	I/O	SWX access data bus
46	CS0	O	Memory address bus	130	PDT10	I/O	
47	SMA0	O	Memory address bus	131	PDT9	I/O	
48	SMA16	O	Power supply	132	PDT8	I/O	
49	VCC49		Ground	133	VCC133		Power supply
50	GND50			134	GND134		Ground
51	SMA1	O		135	PDT7	I/O	
52	SMA15	O		136	PDT6	I/O	
53	SMA2	O		137	PDT5	I/O	
54	SMA14	O		138	PDT4	I/O	SWX access data bus
55	SMA3	O	Memory address bus	139	PDT3	I/O	
56	SMA13	O		140	PDT2	I/O	
57	SMA4	O		141	PDT1	I/O	
58	SMA12	O		142	PDT0	I/O	
59	SMA5	O		143	VCA143		Power supply
60	GND60		Ground	144	GND144		Ground
61	VCC61		Power supply	145	PAD2	I	
62	SMA11	O		146	PAD1	I	SWX access address bus
63	SMA6	O		147	PAD0	I	
64	SMA10	O		148	VCC148		Power supply
65	SMA7	O		149	GND149		Ground
66	SMA9	O		150	PCS	I	Chip select
67	SMA17	O		151	PWR	I	write enable
68	SMA8	O	Memory address bus	152	PRD	I	read enable
69	SMA18	O		153	RXD0	I	for Midi or TO-HOST
70	SMA19	O		154	RXD1	I	for Midi or Key scan
71	SMA20	O		155	SCLKI	I	EXT Clock
72	SMA21	O		156	ADIN	I	A/D converter
73	SMA22	O		157	ADLR	O	A/D converter LR clock
74	SMA23	O		158	DO0	O	DAC
75	CMA20	O	Program address bus	159	DO1	O	DAC
76	CMA19	O	Program address bus	160	SYSCLK	O	1/2 clock
77	VCC77		Power supply	161	VCC161		Power supply
78	GND78	O	Ground	162	GND162		Ground
79	CMA18	O		163	WCLK	O	for DAC LR clock
80	CMA17	O		164	QCLK	O	1/12 clock
81	CMA5	O		165	BCLK	O	IIS-DAC clock
82	CMA6	O		166	SYI	I	Synch signal
83	CMA4	O		167	IRQ0	I	Interrupt request
84	CMA7	O	Program address bus	168	NMI	I	Interrupt request

• **UPD63200GS-E1** (XP867A00) **DAC** (Digital to Analog Converter) DM: IC018

PIN No.	NAME	I/O	FUNCTION	PIN No.	NAME	I/O	FUNCTION
1	4/8FS	I	4/8 Fs selection	9	R. REF		Channel R voltage reference
2	D. GND		Digital ground	10	L. REF		Channel L voltage reference
3	16/8 BIT	I	16 bit/8 bit selection	11	L. OUT	O	Channel L output
4	D. VDD		Digital power supply	12	A. GND		Analog ground
5	A. GND		Analog ground	13	LRCX/WD	I	Left/right check, Word clock
6	R. OUT	O	Channel R output	14	LR/RSI	I	Left/right selection, Channel R series input
7	A. VDD		Analog power supply	15	SI/LSI	I	Series input/Channel L series input
8	A. VDD			16	CLK	I	Clock

• **MBCG46183-129PFV-G** (XV833A00) **SIO4** DM: IC030

PIN No.	NAME	I/O	FUNCTION	PIN No.	NAME	I/O	FUNCTION
1	D5	I/O	Data bus	25	TX31	O	Serial data
2	D6	I/O		26	RX32	I	
3	D7	I/O		27	TX32	O	
4	/IRQ0	I/O	Interrupt request	28	RX33	I	
5	/IRQ1	I/O	Interrupt request	29	TX33	I/O	
6	VSS6		Ground	30	/IC	I	Initial Clear
7	/IRQ2	I/O	Interrupt request	31	VSS31		Ground
8	/IRQ3	I/O	Interrupt request	32	XI	I	Crystal quarts input
9	/RD	I	Read	33	VSS33		Ground
10	/WR	I	Write	34	XO	O	Crystal quarts output
11	/CE	I	Chip enable	35	A0	I	Address bus
12	/ASTB	I		36	A1	I	
13	TESTI0	I	Test mode	37	A2	I	
14	RX0	I	Serial data	38	A3	I	
15	TX0	O		39	A4	I	
16	RX1	I		40	A5	I	
17	TX1	O		41	CPUCLK	I	Clock
18	VSS18		Ground	42	VSS42		Ground
19	VDD19		Power supply	43	VDD43		Power supply
20	RX2	I	Serial data	44	D0	I/O	Data bus
21	TX2	O		45	D1	I/O	
22	RX30	I		46	D2	I/O	
23	TX30	O		47	D3	I/O	
24	RX31	I		48	D4	I/O	

• **YMZ702-D** (XR632A00) **KSN2** (Key Scanner) HE-D_SW L

PIN No.	NAME	I/O	FUNCTION	PIN No.	NAME	I/O	FUNCTION
1	BK5	O	Key block (open drein)	21	GND		Ground
2	BK4	O		22	VDD		Power supply
3	BK3	O		23	SO	O	Serial data
4	BK2	O		24	ACK	I	Acknowledge/mode select
5	BK1	O		25	XCK	I	Clock for serial data
6	BK0	O		26	/IC	I	Initial clear
7	MK15	I	First make contact	27	TST1	I	Test mode
8	MK14	I		28	TST2	I	(L,L: normal mode, others: test)
9	MK13	I		29	XCKINH	I	Inhibit of serial clock
10	MK12	I		30	BK14	O	Key block (open drein)
11	MK11	I		31	BK13	O	
12	MK10	I		32	BK12	O	
13	MK05	I	Second make contact	33	BK11	O	
14	MK04	I		34	BK10	O	
15	MK03	I		35	BK9	O	
16	MK02	I		36	BK8	O	
17	MK01	I		37	BK7	O	
18	MK00	I		38	BK6	O	
19	XIN	I	Crystal osc. input (4 MHz)	39	GND		Ground
20	XOUT	O	Crystal osc. output (4 MHz)	40	VDD		Power supply

■ IC BLOCK DIAGRAM

● **NJM4556AM(T1)** (XQ138A00)
● **UPC4570G2** (XF291A00)
● **NJM3414AM(T1)** (XR294A00)
Dual Operational Amplifier

DM: IC013, 016, 019, 020

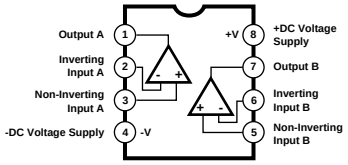

● **SN74HCT245NSR** (XM909A00)
● **SN74HC245N** (IR024550)
● **TC74VHCT245AF** (XV242A00)
Octal 3-State Bus Transceiver

DM: IC027
SW: IC003
US : IC005

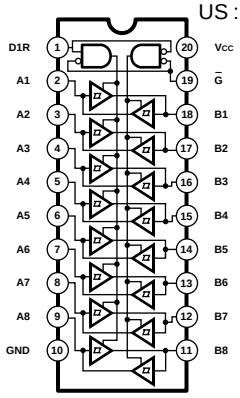

● **SN74HC273N** (IR027350)
● **TC74VHC273F** (XN971A00)
Octal D-Type Filp-Flop

SW: IC002, 004
US : IC007

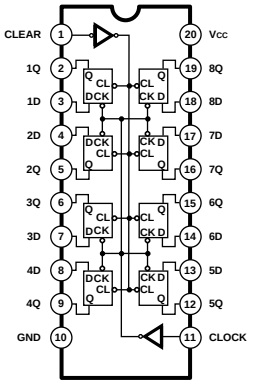

● **MM74HC14SJX** (XW104A00)
Hex Inverter

DM: IC029

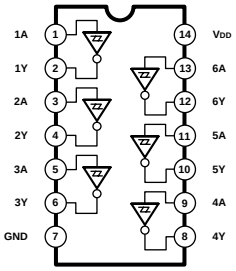

● **SN74HC138NSR** (XW793A00)
3 to 8 Demultiplexer/Decoder

DM: IC028

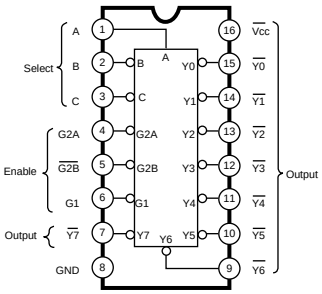

● **TC7S66F** (XR682A00)
BILATERAL SWITCH

DM: IC021

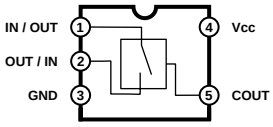

● **TC74VHC04F** (XM332A00)
● **TC74HCT04AF-T1** (XI297A00)
Hex Inverter

US: IC004
DM: IC024

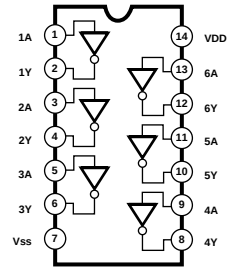

● **MM74HC74ASJX** (XY153A00)
● **TC74VHC74FT** (XV892A00)
Dual D-Type Filp-Flop

DM: IC026, 032

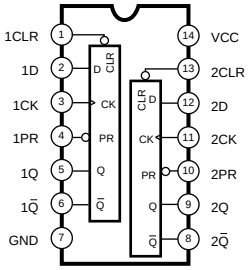

INPUTS				OUTPUTS	
PR	CLR	CLK	D	Q	Q
L	H	X	X	H	L
H	L	X	X	L	H
L	L	X	X	H	H
H	H	f	H	H	L
H	H	f	L	L	H
H	H	L	X	Q₀	Q₀

● **TC7WH32FU(TE12L)OR** (XY364A00)
Dual 2 Input OR Gate

DM: IC033

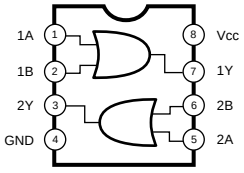

- **TC74HCT32AF(EL)** (XY096A00)
- **SN74HC32N** (IR003250)
- **74VHC32SJX** (XY306A00)
- **TC74VHC32F-TEL** (XR337A00)
- **TC74VHCT32AFT-EL** (XZ372A00)

Quad 2 Input OR

DM: IC031
SW: IC005
US : IC002, 003, 008

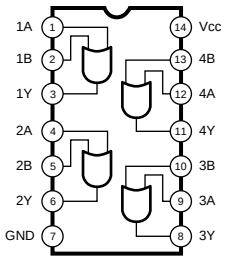

- **TC74VHC244F** (XT800A00)
- **HD74LV244AFPEL** (ISO24400)

Buffer

US: IC006

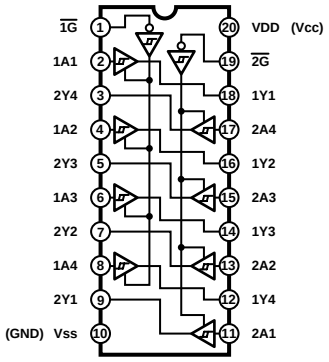

■ CIRCUIT BOARDS

CONTENTS

LC Circuit Board (XZ147B0) ..... Page 22
US Circuit Board (X2190B0) ..... Page 23
DM Circuit Board (XZ144G0) ..... Page 24
VOL Circuit Board (X2189C0) ..... Page 25
KB Circuit Board (X2189C0) ..... Page 25
SW Circuit Board (X2189C0) ..... Page 28

•LC Circuit Board

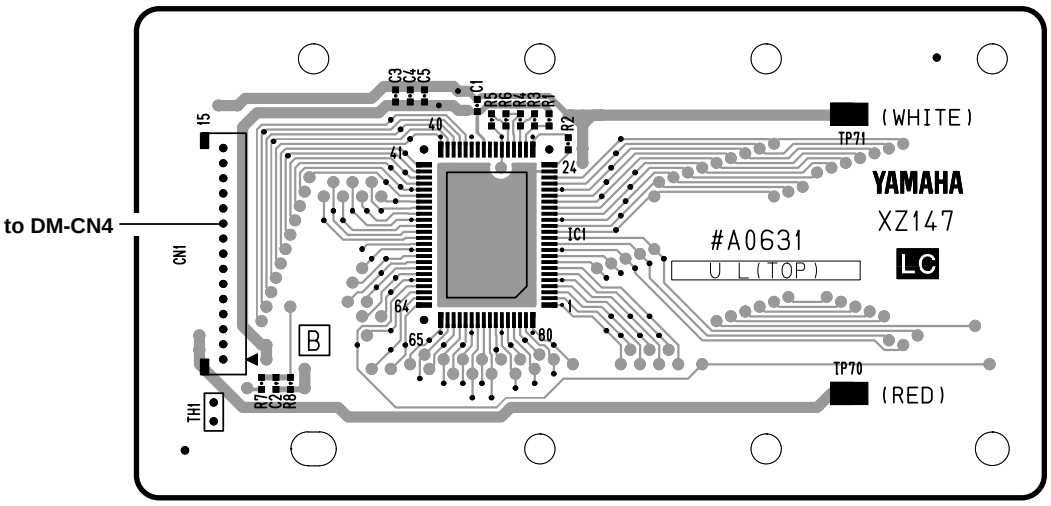

Components Side

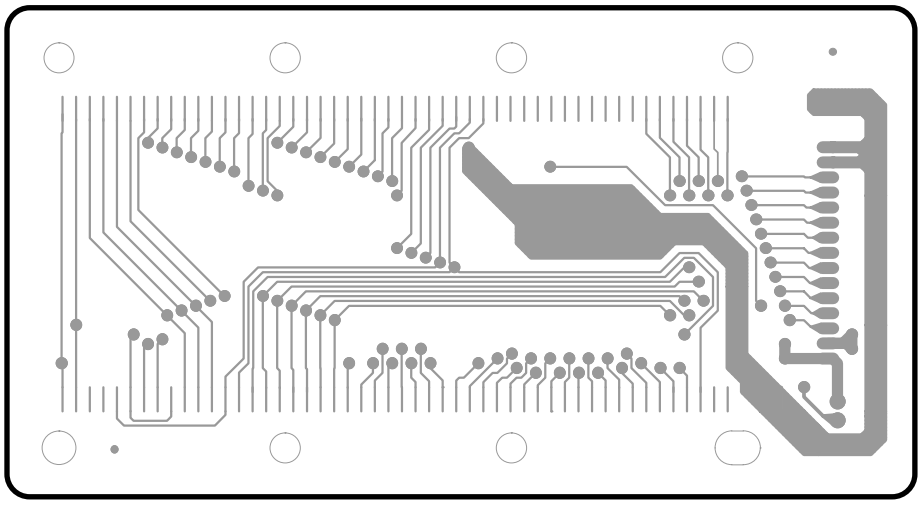

Pattern Side

●US Circuit Board

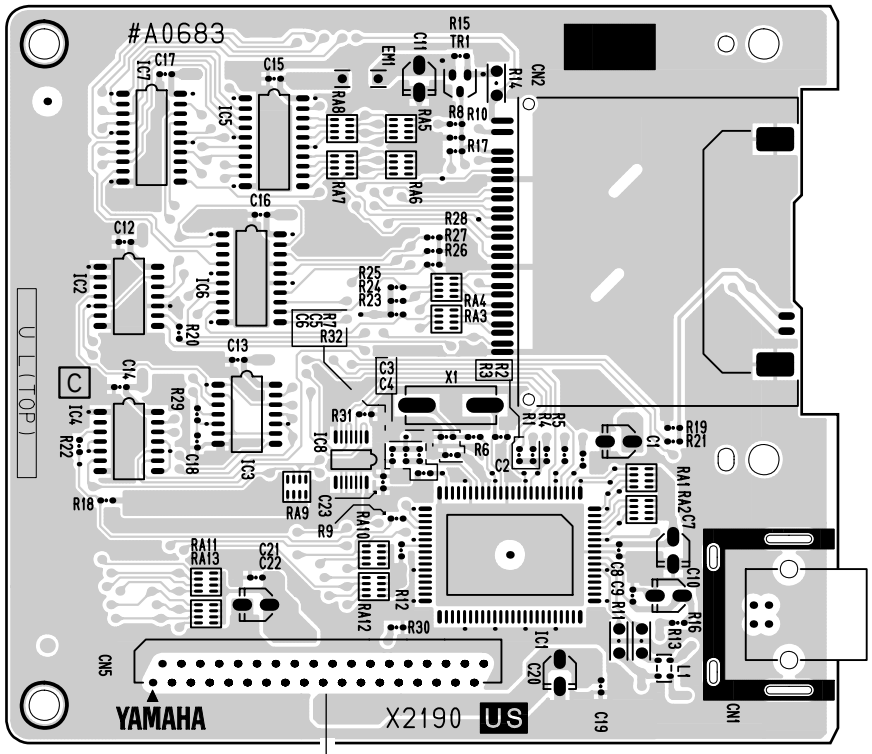

Components Side

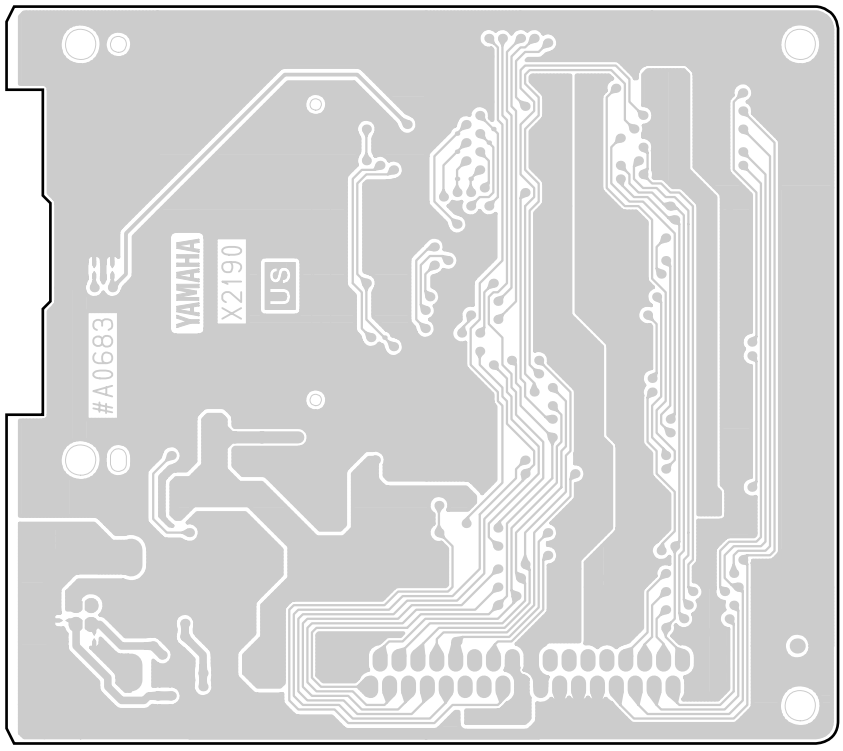

Pattern Side

US: 2NA-V839530

S08

•DM Circuit Board

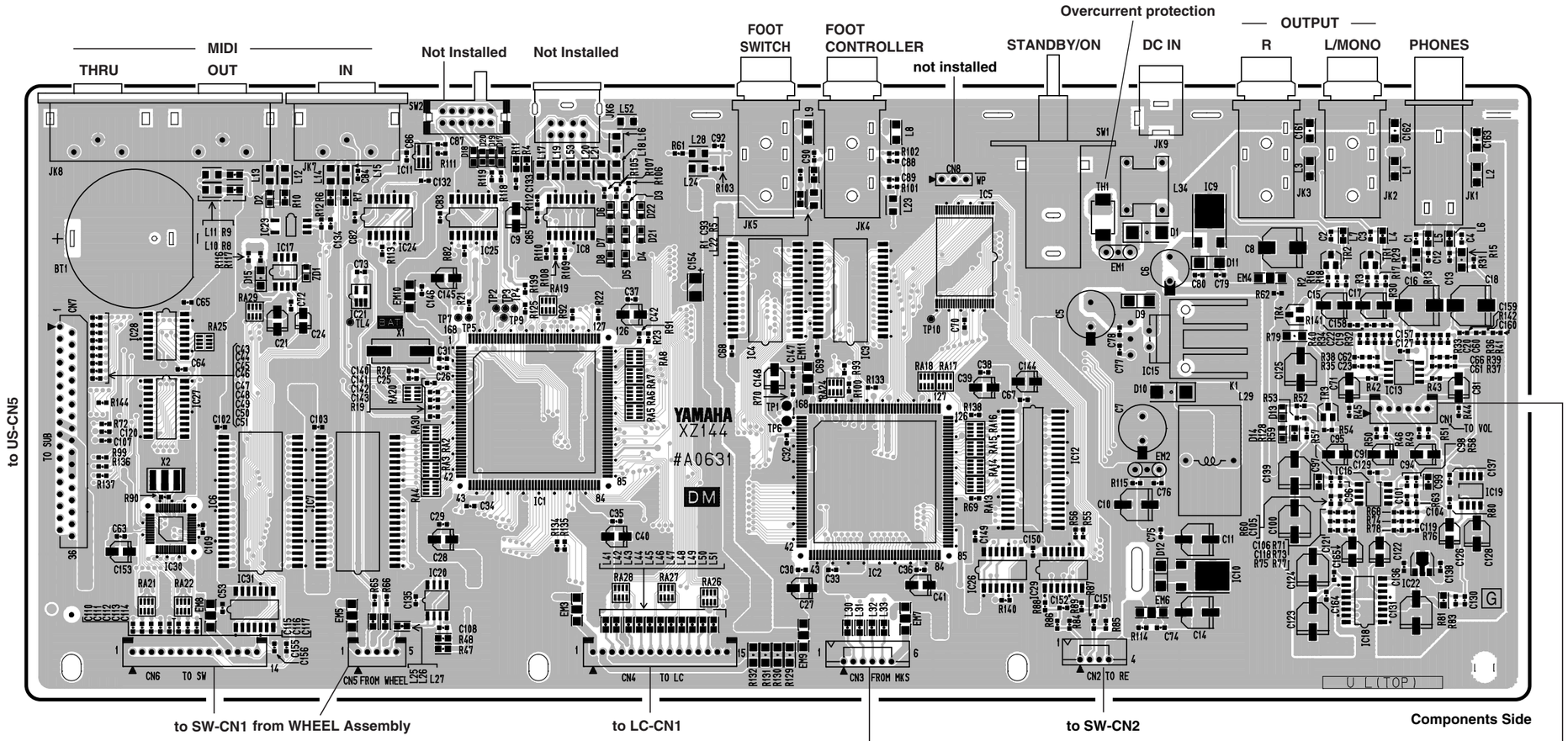

•VOL Circuit Board

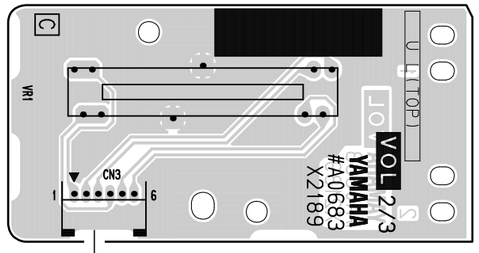

•KB Circuit Board

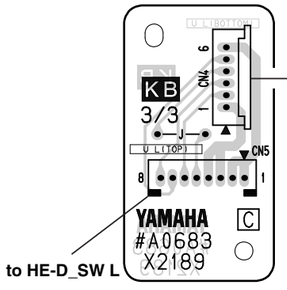

DM: 2NA-V862080
VOL: 2NA-V839520 ⚠2
KB: 2NA-V839520 ⚠2

S08

●DM Circuit Board

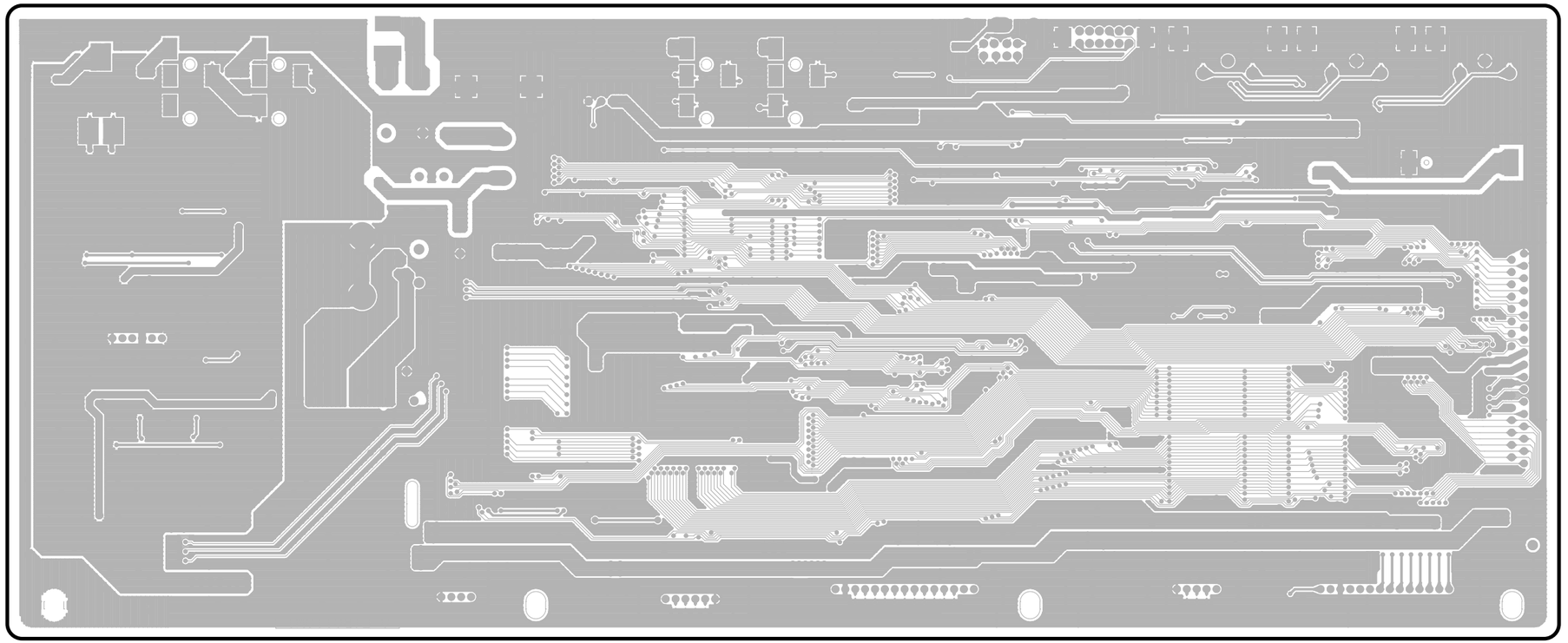

Pattern Side

S08

SW Circuit Board

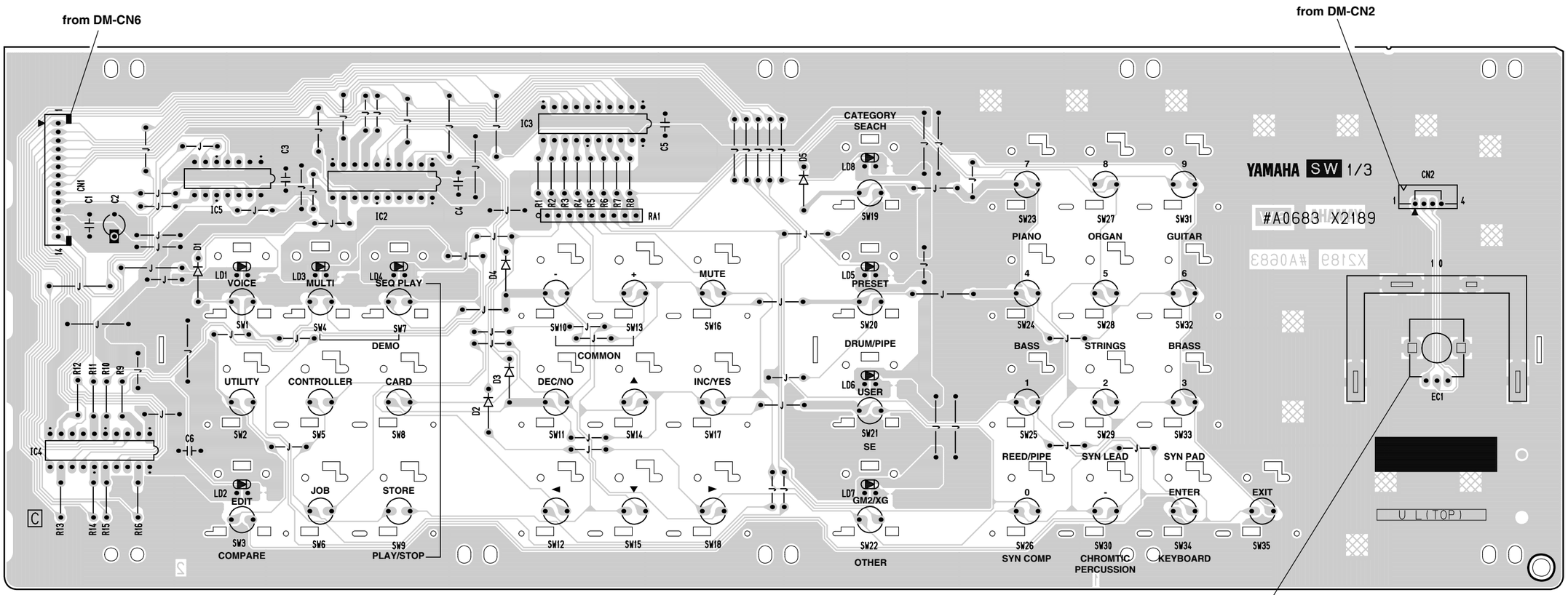

SW: 2NA-V839520 2

■ TEST PROGRAM

(A) LIST OF TESTS

Test No.	Test item	Test No.	Test item
T1	RAM, battery	T14	OUTPUT- R
T2	LCD	T15	Encoder
T3	Panel Switch & LED	T16	USB (MIDI)
T4	1 key on	T19	Card
T5	Keyboard	T20	RAM (SRAM)
T6	Pitch Bend	T21	ROM (Program ROM)
T7	Modulation Wheel	T22	Wave ROM
T8	Foot Controller	T23	Factory Set
T9	Foot Switch	T24	Exit (Noise Level)
T10	MIDI IN/OUT/THRU	T25	Battery
T13	OUTPUT-L		

(B) MEASURING REQUIREMENTS

The following measuring instruments and jigs are required for testing the main unit.

Instruments: Low-frequency oscillator (with an output wave form distortion factor of 0.1% or less)
Frequency counter (with an input impedance of 1 MΩ or more)
Oscilloscope (with an impedance of 1 MΩ or more)
Level gauge (JIS-C curve, input impedance of 1 MΩ or more, 0 dBm: 1 mW 600 Ω)
Keyboard amplifier (equivalent to KS15)

Jigs: MIDI cable, DOS/V personal computer with USB terminals, Smart Madia (3.3 V, one for each of Write Protect/ No Write Protect)

(C) HOW TO ENTER THE TEST PROGRAM

Turn on power while pressing the buttons [1]+[2]+[3]. When power is on, LCD will display the following message.

```
TEST:V#.##
     V$.$$
```

V#.##: **Main Version**
V$.$$: **USB Version**

After a while the following display will appear. Proceed to the test according to the next "PROCEEDING THROUGH THE TEST PROGRAM."

```
01:BATTERY
```

(D) PROCEEDING THROUGH THE TEST PROGRAM

When the test program is started, the following display will appear.

```
01:BATTERY
```

Proceed to the test by using the [DEC], [INC], [ENTER], and [EXIT] buttons.
Pressing the [INC] button selects the test next to the current one and the test items will be displayed.
Pressing the [DEC] button selects the test just before the current one, and the test items will be displayed.
Pressing the [ENTER] button executes the current test.
Pressing the [EXIT] button during display of the test result exits back to the test item selection.
Pressing the [EXIT] button during test item selection ends the test.

(E) TEST SELECTION WHEN AN ERROR HAS BEEN DETECTED

When the test result has been judged as NG in each of the following tests, an error processing state will be entered by the operation shown below, allowing other tests to be performed.
When an error occurs, an error message will appear and the test will end.
In such a case, the error will be processed by the [EXIT] switch.
Selecting a test No. by pressing [INC] and [DEC] and then pressing [ENTER] restarts the test.

T1. RAM BATTERY

```
01:BATTERY
```

Check that the voltage of the backup battery is 2.7 V or more.

(Test Procedure)
The test is executed.

(Check Item)
The test judgment is checked in LCD.

(Judgment Result)

OK

```
01:BATTERY
        OK
```

NG

```
01:BATTERY
        NG
```

(Test End)
The test ends after the result is displayed and outputted.

(Note) Since a great error occurs before the voltage is settled after power is turned on, wait about 20 seconds after power is on and then start the test.

T2. LCD

```
02:LCD
```

LCD dots are viewed by the eye and checked.

(Test Procedure)
The test is executed.

(Check Item)
Check that all dots are blinking in black and white.

(Judgment Result)

None

(Test End)

Pressing [EXIT] ends the test.

T3. PANEL SWITCH AND LED

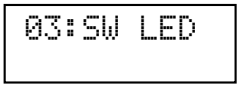

Check that the panel switch operates correctly.

Check that LED turns on or off.

(Test Procedure)

Turn on or off the panel switches from [MULTI] to [EXIT] according to the LCD display.

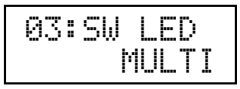

When the switches [MULTI], [VOICE], [SEQ PLAY], [EDIT], [CATEGORY SEARCH], [PRESET], [USER], and [GM/XG] are turned on correctly, the corresponding LED lights up while the switch is on and the sine wave produces sound.

When it is detected that the switch is off, the corresponding LED goes off and the sound stops.

When the other switches are turned on correctly, the sine wave produces sound while they are on.

When it is detected that the switch is off, the sound also stops.

The switches other than displayed in LCD display will not respond even if they are pressed.

If all switches have been checked as to whether they can be turned on or off (correctly), OK will be displayed.

See Table 1 for the order of checking the switches.

Turn	Name	Turn	Name	Turn	Name
1	VOICE	13	-/NO	25	TEN 9
2	MULTI	14	UP	26	TEN 4
3	SEQ	15	+/YES	27	TEN 5
4	UTLTY	16	LEFT	28	TEN 6
5	CTRL	17	DOWN	29	TEN 1
6	CARD	18	RIGHT	30	TEN 2
7	EDIT	19	CTGRY	31	TEN 3
8	JOB	20	PRE	32	TEN 0
9	STORE	21	USER	33	TEN -
10	-	22	GM/XG	34	ENTER
11	+	23	TEN 7	35	EXIT
12	MUTE	24	TEN 8		

（Table 1）

(Check Item)

Check that all switches operate correctly.

Check that all LEDs turn on or off correctly.

(Judgment Result)

OK

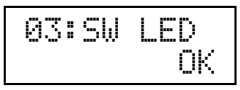

NG No display

(Test End)

If all switches are judged (have been checked) for correct operation, OK will be displayed and the test will be ended.

T4. 1 KEY ON

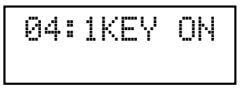

Check that the keyboard operates correctly.

(Test Procedure)

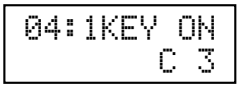

Perform [KEY ON] on the keyboard displayed in LCD.

Performing [KEY ON] on the keyboards other than the one displayed in LCD will be ignored.

In a normal state, the sine wave is outputted during [KEY ON] and sound stops at [KEY OFF].

If checked correctly, OK will be displayed.

(Check Item)

Check that the keyboard operates correctly.

(Judgment Result)

OK

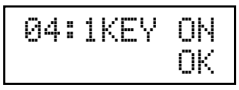

NG No display

(Test End)

If the keys are checked correctly, OK will be displayed and the test will be ended.

T5. KEYBOARD

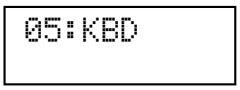

Check that the keyboard operates correctly.

(Test Procedure)
88 keys from A-1 to C7 are scaled.

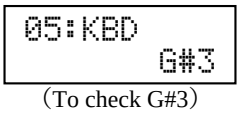

(To check G#3)

Perform [KEY ON] on the keyboard displayed in LCD.
Performing [KEY ON] on the keyboards other than the one displayed in LCD will be ignored.
In a normal state, sine wave is outputted during [KEY ON] and sound stops at [KEY OFF].
If all keys have been checked correctly, OK will be displayed.

(Check Item)
Check that all keyboards operate correctly.

(Judgment Result)
OK



NG No display

(Test End)
If all keys have been checked correctly, OK will be displayed and the test will end.

T6. PITCH BEND

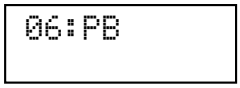

Check that the pitch bend operates correctly.

(Test Procedure)
Move the pitch bend smoothly to the center – top – bottom according to the following LCD display.
64- 127- 00

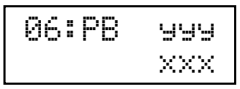

yyy: Next target value
xxx: Current data value

(Check Item)
Check that the figures change smoothly without a catch and that OK judgment is displayed.

(Display of Judgment Result)
OK

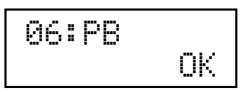

NG

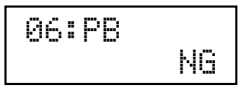

(Test End)
End the test after displaying and outputting the judgment.

T7. MODULATION WHEEL
T8. FOOT CONTROLLER

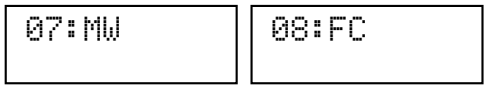

Check that each controller operates correctly.

(Test Procedure)
Move each controller to the bottom – top according to the following LCD display.
00-127

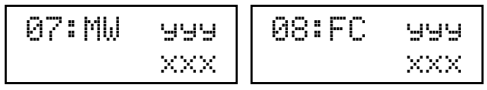

yyy: Next target value
xxx: Current data value

(Check Item)
Check that the figures change smoothly and that OK judgment is displayed.

(Display of Judgment Result)
OK

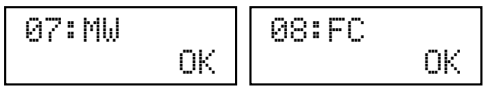

NG NO display

(Test End)
End the test after displaying and outputting the judgment.

T9. FOOT SWITCH

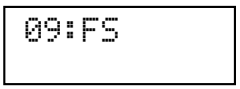

Check that the foot switch input operates correctly.

(Test Procedure)
Turn on or off the foot switch.

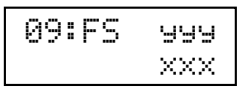

yyy: Next target value(on/off)
xxx: Current data value(on/off)

(Check Item)
Check that the data value changes and that OK judgment is displayed.

(Display of Judgment Result)

OK



NG No display

(Test End)

End the test after displaying and outputting the judgment.

T10. MIDI IN/OUT/ THRU

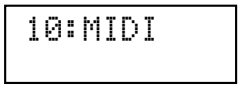

Use the test pattern (AA FF 00 55) to check the operation of MIDI IN/ OUT/ THRU.

(Test Procedure)

After connecting the MIDI cables, perform the test for IN and OUT.

If the test is OK, use the MIDI monitor to check that the test pattern (AA FF 00 55) is outputted from THRU.

The following display will appear in the LCD.

(Check Item)

Check that OK is displayed when IN and OUT are checked and that the test pattern is outputted from THRU.

(Display of Judgment Result)

OK

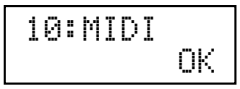

NG

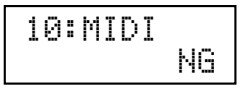

(Test End)

End the test after displaying the judgment.

T13. OUTPUT-L SOUND

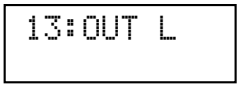

Check that correct signals are outputted from OUTPUT- L and PHONES (L).

(Test Procedure)

Insert the plugs into OUTPUT-L, OUTPUT-R, PHONES (L), and PHONES (R) and observe the frequency, output waveform, and output level that are outputted from each of them by using the frequency counter, oscilloscope, and level gauge (with JIS_C filter).

Turn the master volume to max.

The following display will appear during sound.

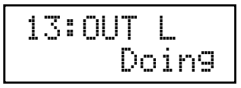

(Check Item)

OUTPUT-L: 880 Hz ±3Hz, sine wave, +6.0 ±2 dBm (load: 10 kΩ)
(Distortion factor of 0.1% or less)

OUTPUT-R: -80 dBm or less (load: 10 kΩ)

PHONES (L): 880 Hz ±3 Hz, sine wave, -1.0 ±2 dBm (load: 33 Ω)
(Distortion factor of 0.1% or less)

PHONES (R): -58 dBm or less (load: 33 Ω)

(Display of Judgment Result)

OK No display

NG No display

(Test End)

Pressing [EXIT] ends the sound and the test number is put on standby.

T14. OUTPUT-R SOUND

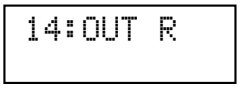

Check that correct signals are outputted from OUTPUT-R and PHONES (R).

(Test Procedure)

Insert the plugs into OUTPUT-L, OUTPUT-R, PHONES (L), and PHONES (R) and observe the output waveform, and output level that are outputted from each of them by using the oscilloscope, and level gauge (with JIS_C filter).

Turn the master volume to max.

The following display will appear during sound.

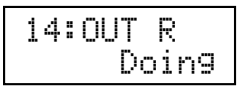

(Check Item)

OUTPUT-L: -80 dBm or less (load: 10 kΩ)

OUTPUT-R: 880 Hz ±3 Hz, sine wave, +6.0 ±2 dBm (load: 10 kΩ)
(Distortion factor of 0.1% or less)

PHONES (L): -58 dBm or less (load: 33 Ω)

PHONES (R): 880 Hz ±3 Hz, sine wave, -1.0 ±2 dBm (load: 33 Ω)
(Distortion factor of 0.1% or less)

(Display of Judgment Result)

OK No display

NG No display

(Test End)
Pressing [EXIT] ends the sound and the test number is put on standby.

T15. ENCODER



Check that the encoder operates correctly.

(Test Procedure)
According to the following LCD display, turn the encoder clockwise and then counterclockwise.
+0 - > +8 (- 0)- > - 8

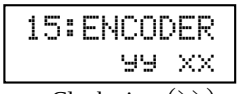

yy : Clockwise（>>）, Counterclockwise（<<）
xx : Current value

(Check Item)
Check that in the right of the screen the figure increases smoothly from +0 to +8 after a clockwise turn and then it decreases smoothly from –0 to –8 after a counterclockwise turn and that the OK judgment appers.

(Display of Judgment Result)
OK

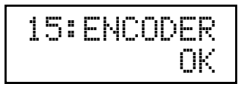

NG No display

(Test End)
End the test after displaying and outputting the judgment.

T16. USB(MIDI)

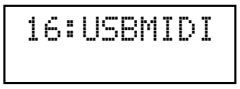

Use the test pattern (f0 55 00 f7) to check USB (MIDI) IN/ OUT for operation.

(Test Procedure)
Connect the USB terminal and PC and perform the test.

(Check Item)
Check that an OK message appears in IN or OUT checking.

(Display of Judgment Result)
OK

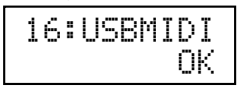

NG

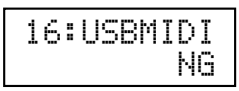

NG(TIME OUT)



(Test End)
End the test after displaying the judgment.

T19. CARD



Check that SmartMedia is protected.
Check SmartMedia for Format/ Write/ Read/ Verify.
Check that SmartMedia is pulled out.

(Test Procedure)
After LCD displays [INS], insert SmartMedia with Protect on (sealed). Next, after LCD displays [REPLC], pull out SmartMedia and insert SmartMedia with Protect off (unsealed). Pull out SmartMedia after checking that LCD display changes in the sequence of [DOING] → [REMOV].

(Check Item)
Check that LCD displays the tests judged to be [OK]

(Display of Judgment Result)
OK



NG



xxxxx : ERROR CODE

Error code
RD/ WR: Read/ Write error
NOCRD: No card (when EXIT is pressed with no card inserted)
WRPRT: Write Protect is not identified.
ABORT: Abort (interrupted when EXIT is pressed with the card inserted)

(Test End)
End the test after displaying and outputting the judgment.

T20. RAM

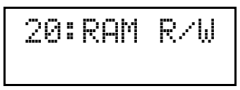

Test is performed for Write/ Read/ Verify for SRAM.

(Test Procedure)
Test is performed.
Write/ Verify is executed.

(Check Item)
The test result is checked in LCD.

(Display of Judgment Result)

OK

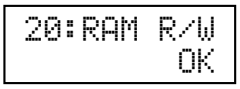

NG

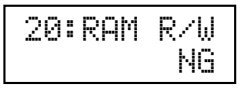

(Test End)
End the test after displaying and outputting the judgment.

(Note) All data on RAM is stored. Data will be evacuated immediately before verifying check and be stored immediately after it in repeated sequence.

T21. ROM



Program ROM is checked for ID.
Check RY/BY_ for operation (write into a specific address).

(Test Procedure)
The test is executed.

(Check Item)
The test result is checked in LCD.

(Display of Judgment Result)

OK



NG



(Test End)
End the test after displaying and outputting the judgment.

T22. WAVE ROM

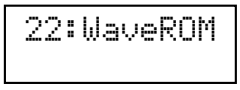

Check 2 WAVE ROMs for the following.
All addresses are subjected to the same judgment process as is made on the correctness of the data read for the address for which only one address line applies to 1. In addition, the same check is done for the address 0.

(Test Procedure)
The test is executed.

(Check Item)
The test result is checked in LCD.

(Display of Judgment Result)

OK

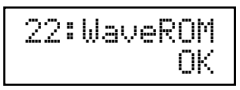

NG

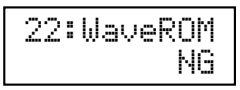

(Test End)
End the test after displaying and outputting the judgment.

T23. FACTORY SET

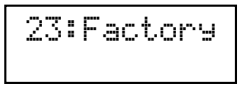

Data is set to the factory set data.

(Test Procedure)
Pressing [ENTER] restores the factory setting and the screen exits.

(Check Item)
None

(Display of Judgment Result)

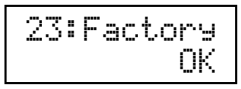

(Note) For shipping, each controller on the main unit is set as follows.

Volume Slider	Minimum
Pitch Bend Wheel	Medium
Modulation Wheel	Minimum
STANDBY/ON	STANDBY

T24. EXIT

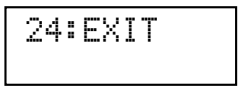

Get out of the test mode.

(Test Procedure)
EXIT is executed by pressing [ENTER].

(Check Item)
None

(Display of Judgment Result)
None

(Test End)

EXIT is executed by pressing [ENTER].

(Note) Getting out of the test mode is followed by the same sequence as when power is turned on. Also check that the noise level meets the following conditions when none of the note-on steps are made in normal mode after a test subsequent to the factory set.
Measure using the level gauge (with JIF-C filter).

OUTPUT-L- - - - - - - - - - > -87 dBm or less (load: 10 kΩ)
OUTPUT-R- - - - - - - - - - > -87 dBm or less (load: 10 kΩ)
PHONES-L- - - - - - - - - - > -94 dBm or less (load: 33 Ω)
PHONES-R- - - - - - - - - - > -94 dBm or less (load: 33 Ω)
Power consumption: Measured at DC IN terminal
230 mA ± 10 %

T25. BATTERY

Perform the test 30 seconds before power is on or after power is off.
Check the voltage between the positive terminal of C154 and DGND.

(Test Procedure)
Perform measurement of the voltage between the positive terminal of C154 and DGND using an instrument with an impedance of 1M ohms or more.

(Check Item)
Check that the voltage is 2.6 V or more and 3.2 V or less.

■ OS UPDATE

CAUTIONS
Make sure you store your user data before executing the update.

* Tools required for update: 8MB or larger smart media
  Smart media floppy disk adaptor

* Download the S08 updated program from the download page on the YSISS Homepage to the smart media.
  (YSISS URL >> http://plaza.yamaha.co.jp/ysiss/exindex.nsf)
  (Insert a smart media containing only the update program (0683EXT1.pgm) Into the card slot on the main unit.)

1. Insert the smart media containing the upgrade program into the slot on the Rear panel.
   The correct direction of media is printed on the panel.

2. Turn the power on with "VOICE" button "EDIT" button and "STORE" button pressed and held.
   (The upgrade screen is displayed on LCD.)



3. Press "ENTER" button after the version check. The program is updated automatically and the process is displayed on LCD.
   (It takes about 3 minutes.)



4. If the program successfully updated the "Complete!" message shown in appears. Turn the power off.

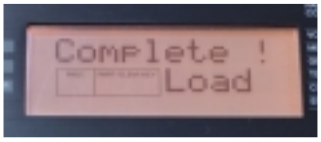

5. Remove the smart media from the slot.

6. Turn the power on with "VOICE" button "EDIT" button and "STORE" button pressed and held again. Make sure of Version.

It is completion above.

* NOTES <In case the update fails>
  After updating, if the system on the S08 does not operate when the power is switched on, update again. If the software will not update again, repair the following:

  Symptom: System on the S08 does not operate when the power is switched on.

<REPAIR PROCEDURE>
① Replace the FLASH ROM (IC5: X2380D00) on the DM circuit board.
② After changing, load the new version software of the program again.
③ Check the "new version" and system operation.

■ CHECK POINT • TROUBLESHOOTING

1. Backlight alone turns on, or screen freezes.
   (Or test mode is inaccessible.)



1-1) Reset circuit
Check each of the circuits below.
- Check Check for Reset Reset IC17-7pin/CPU IC1-1pin (TP7) for wave forms.
  [Action] After checking the above, replace any defective IC.

〈Steady state〉

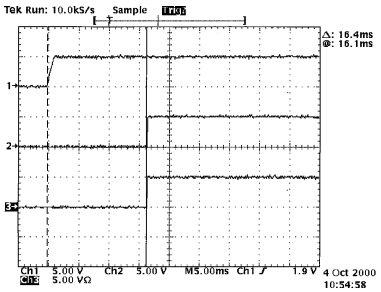

vcc

/res

IC17-7 pin

1-2) Clock circuit
- Check CLOCK 8.4672MHz/ CPU IC1-9, 10pin for waveforms.
  [Action] Check the quartz oscillator. If it is not oscillating, replace it.

〈Steady state〉

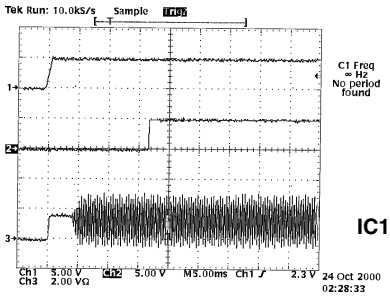

IC1-9 pin

〈Steady state〉

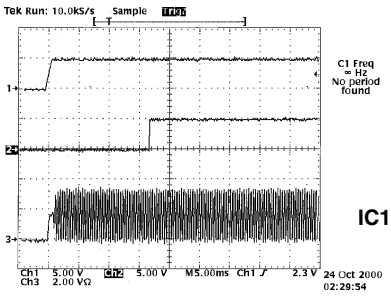

IC1-10 pin

1-3) CS circuit
Check the following terminals for waveforms.
- CS0 for Program ROM: TP10/**CPU IC1-46pin/FROM IC5-26pin**
- CS1 for SRAM: CPU IC1-93pin/SRAM IC3, IC4-22pin
- CS2/CPU IC1-132pin for peripheral devices
- CS2/CPU IC1-131pin for peripheral devices
- CS/Wave ROM IC6, IC7-12pin for Wave ROM
  [Action] After checking the above, resolder or replace IC.

〈Steady state〉

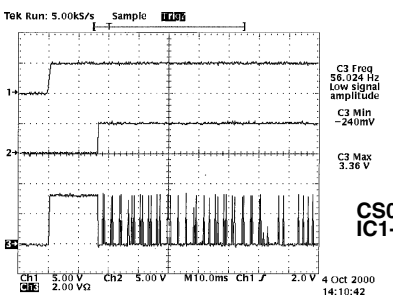

CS0
IC1-46 pin

〈Steady state〉

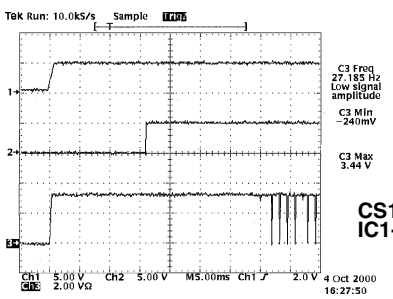

CS1
IC1-93 pin

〈Steady state〉

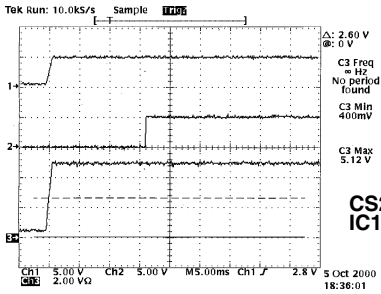

CS2
IC1-132 pin

〈Steady state〉

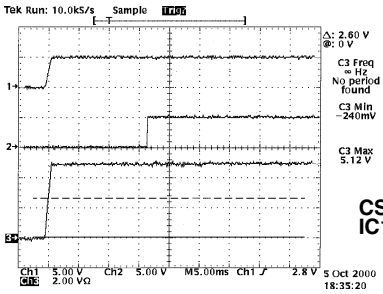

CS3
IC1-131 pin

1-4) CPU peripheral circuit (SWX00/Program ROM/SRAM)
Check the following terminals for waveforms.
- CPU (SWX00) IC1/ data/ address bus
- Program ROM IC5/ data/ address
- SRAM IC3, IC4/ data/ address bus

[Action] After checking the above, re-solder or replace IC.

〈Steady state〉

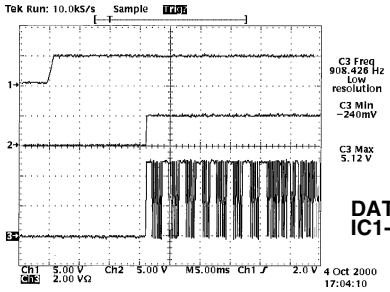

DATA
IC1-106 pin

〈Steady state〉

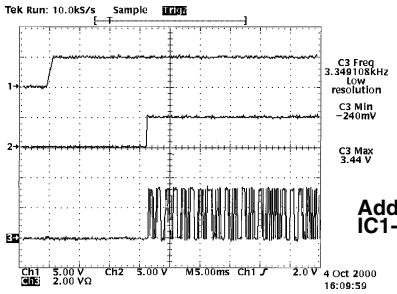

Address
IC1-89 pin

1-5) LCD peripheral circuit
- LCD Controller IC1 (LC circuit board)
- LCD unit

[Action] After checking the above, resolder or replace IC.
In case of the failure of LCD, replace it.

2. It takes time for an opening message to appear. (About 7 seconds)
Something may be wrong with communication with USB microcomputer, so check the following circuit.



2-1) USB microcomputer circuit
- USB microcomputer reset IC1-10pin

[Action] After checking the above, replace any defective IC.

〈Steady state〉

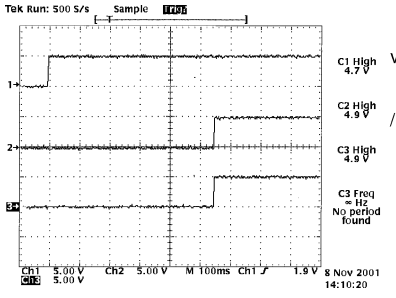

IC1-10 pin

2-2) USB microcomputer clock

- CLOCK 16MHz/USB microcomputer IC1-14 pin, 10pin for waveforms.

  [Action] Check the quartz oscillator. If it is not oscillating, replace the quartz oscillator (CLOCK 16MHz).

〈Steady state〉

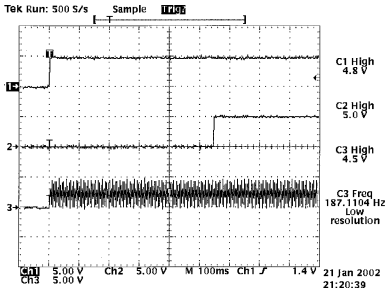

IC1-14 pin

2-3) CPU peripheral circuit (SWX00/ Program ROM/SRAM)

- CPU (SWX00) IC1⇔USB microcomputer/ data address

  [Action] After checking the above, re-solder or replace IC.

3. Screen freezes when it is opened.

   Address data between CPU/ P.ROM/ SRAM may be judged to be OK.

- Check the following circuit for [I/F IC ⇔each device].

3-1) USB connection connector, interface circuit

[Action] P. ON after USB cable is pulled out.
Replace USB connector.
Re-connect YSB cable.

■ SYSTEM FLOW CHART(After turning on the power)

Sequence When Power Is Turned On



Power ON

- Hard resetting for the following devices through reset circuit.
  - SWX00 (master, slave)
  - Key scan microcomputer
  - SIO4 (IC for serial communication)
  - USB microcomputer

Main CPU (SWX00 master)

Initialization of sound source section for SWX00

USB microcomputer

Initialization

Connected with PC?

yes

Initial communication when connected with PC

no

Communication between main CPU (SWX00 master) and USB microcomputer

Communication between main CPU (SWX00 master) and USB microcomputer

Successful in communication?

no

Wait for about 7 seconds

yes

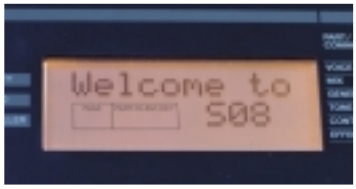

Display opening message

Is Smart Media inserted?

yes

Mounting of Smart Media
(LCD indicates that mounting is being done.)

no

- Steady state gets available on any one of the following screens
  - Voice Play Top screen
  - Multi Play Top screen
  - Seq Play Top screen



Starting sequence is completed

■ DISPLAY MESSAGES

Message	Meanings
Relevant Sequencer Operations or Standard MIDI File Playback	
!Can'tOpen	Can't find the specified type of file.
!Can'tPlay	Can't play the sequencer in these operating conditions.
!IllglFile	The specified SMF for playing is unusable by the S08.
!No SMF	The SMF was not found on the card.
!Not Frmt0	The SMF format (1) is not supported by the S08.
!Not SMF	Can't play the specified type of file.
!IllglSMF*	An error in reading the SMF (other than those described above) occurred.
Relevant Card Operations	
!Bad File	Data in the file is corrupted and cannot be used.
!Can'tOpen	An error occurred while reading from Memory card.
!Card Full	No more available memory on the Memory Card.
!FileHdErr	File format is not recognized.
File None	Can't find the specified type of file.
!Format	An error occurred while formatting the card. Format the card again.
!Mount Err	An error occurred while mounting the Memory Card.
!No Card	Memory Card has not been inserted, or an incompatible card (5V type) has been inserted.
!No Name	Specify the file name.
!OVER 256	No more files can be created.
OverWrite	There is a file already stored with the same name. Replace it with a newer one with that name?
!Protected	Memory Card is write protected.
!Read Only	File is a read-only type, and cannot be deleted, renamed or overwritten.
!SameName	File with the same name already exists.
!TooMany	The maximum number of displaying files (100) has been exceeded.
!Write Err	An error occurred while writing to Memory card.
Others	
!BatteryLo	The memory-backup battery is low; memory cannot be backed up. Store the necessary data to a Memory Card.
!Buff Full	Failed to process the MIDI data because too much data was received at once.
Bulk Rx...	MIDI Bulk data being received.
Bulk Tx...	MIDI Bulk data being transmitted.
!Checksum	Error occurred when receiving bulk data.
Completed!	Operation has been completed.
!DeviceNum	Bulk data cannot be transmitted/received because the device number does not match or is set to "off."
Executing	Operation is being executed.
!MIDI Data	Error occurred when receiving MIDI data.
Sure?	Final confirmation.

YAMAHA [Music Synthesizer --- synth part] Date :20-NOV-2001
Model S08 MIDI Implementation Chart Version : 1.0

Function...		Transmitted	Recognized	Remarks
Basic Channel	Default	1 - 16	1 - 16	Memorized
	Changed	1 - 16	1 - 16	
Mode	Default	3	3	Memorized
	Messages	×	1 - 4(m=1) *2	
	Altered	**********	×	
Note Number : True voice		0 - 127 **********	0 - 127 0 - 127	
Velocity	Note ON	O 9nH,v=1-127	O 9nH,v=1-127	
	Note OFF	× 9nH,v=0	×	
After Touch	Key's	×	O *1	
	Ch's	O *3	O *1	
Pitch Bend		O	O 0-24 semi *1	
Control Change	0,32	O	O *1	
	1,5,7,10,11	×	O *1	
	6,38	×	O *1	Data Entry
	64-67	×	O *1	
	71-74	×	O *1	Sound Controller
	84	×	O *1	Portamento Cntrl
	91,93,94	×	O *1	Effect Depth
	96-97	×	O *1	RPN Inc,Dec
	98-99	×	O *1	NRPN LSB,MSB
	100-101	O	O *1	RPN LSB,MSB
	1-31,33-95	×	O *1	Assignable Cntrl
Prog Change : True #		O 0 - 127 **********	O 0 - 127 0 - 127	
System Exclusive		O	O	
Common	: Song Pos.	×	×	
	: Song Sel.	×	×	
	: Tune	×	×	
System Real Time	: Clock	×	×	
	: Commands	×	×	
Aux Mes- sages	: All Sound Off	×	O (120,126,127)	
	: Reset All Cntrls	×	O (121)	
	: Local ON/OFF	×	×	
	: All Notes OFF	×	O (123-125)	
	: Active Sense	O	O	
	: Reset	×	×	

Notes:
*1 receive if switch is on.
*2 m is always treated as "1" regardless of its value.
*3 though the keyboard itself has no after touch, after touch data can be transmitted from MW and FC when after touch is assigned to the controllers.

Mode 1 : OMNI ON , POLY Mode 2 : OMNI ON ,MONO O : Yes
Mode 3 : OMNI OFF, POLY Mode 4 : OMNI OFF,MONO × : No

YAMAHA [Music Synthesizer --- seq part] Date :20-NOV-2001
Model S08 MIDI Implementation Chart Version : 1.0

Function...	Transmitted	Recognized	Remarks
Basic Default	1 - 16	×	Memorized
Channel Changed	1 - 16	×	
Mode Default	×	×	
Messages	×	×	
Altered	**********	×	
Note	0 - 127	×	
Number : True voice	**********	×	
Velocity Note ON	○ 9nH,v=1-127	×	
Note OFF	○ 8nH,v=1-127	×	
After Key's	○	×	
Touch Ch's	○	×	
Pitch Bend	○	×	
Control 0-121	○	×	
Change			
Prog	○ 0 - 127	×	
Change : True #	**********	×	
System Exclusive	○	×	
Common : Song Pos.	×	×	
: Song Sel.	×	×	
: Tune	×	×	
System : Clock	○ *2	× *1*2	
Real Time : Commands	○ *2	× *2	
: All Sound Off	○	×	
Aux : Reset All Cntrls	○	×	
: Local ON/OFF	○	×	
Mes- : All Notes OFF	○	×	
sages: Active Sense		×	
: Reset		×	

Notes: *1 receive if sync is MIDI.
*2 if sequencer control is on.

Mode 1 : OMNI ON , POLY Mode 2 : OMNI ON ,MONO ○ : Yes
Mode 3 : OMNI OFF, POLY Mode 4 : OMNI OFF,MONO × : No

MUSIC SYNTHESIZER

S08

PARTS LIST

■ CONTENTS

OVERALL ASSEMBLY 2
CONTROL PANEL ASSEMBLY 4
SW CIRCUIT BORAD ASSEMBLY 6
HED KEYBOARD ASSEMBLY 7
LCD ASSEMBLY 8
WHEEL ASSEMBLY **683** 9
WHEEL ASSEMBLY 9
ELECTRICAL PARTS 10

Notes: DESTINATION ABBREVIATIONS

A: Australian model	J: Japanese model
B: British model	U: U.S.A. model
C: Canadian model	V: General export model (110V)
E: European model	W: General export model (220V)
H: North European model	X: General export model
I: Indonesian model	Y: Export model

- The numbers in “QTY” show quantities for each unit.
- The parts with “--” in “Parts No.” are not available as spare parts.
- The mark “ } ” in the remarks column indicates that these parts are interchangeable.
- The second letter of the shaded ( ) part number is l, not one.

■ WARNING

Components having special characteristics are marked ⚠ and must be replaced with parts having specification equal to those originally installed.

■ OVERALL ASSEMBLY

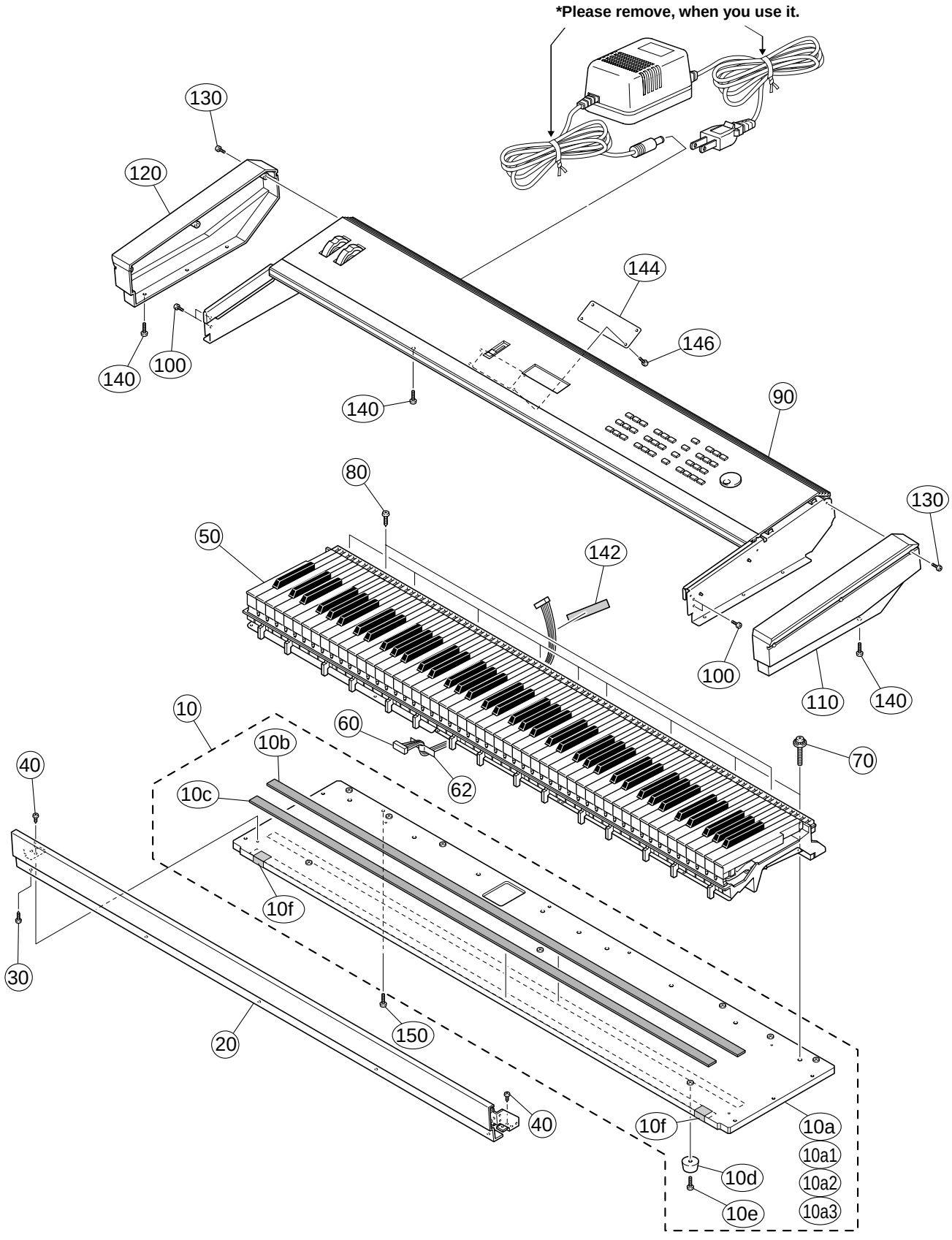

	REF NO.	PART NO.	DESCRIPTION			REMARKS	QTY	RANK
			OVERALL ASSEMBLY			S08		
*		**V8594200**	Overall Assembly					
*	10	**V8594300**	Bottom Board Assembly					
*	10a	**V8594400**	Bottom Board					
	10a1	**ET200070**	Nut	B4.0X9.5 MFZN2Y				
	10a2	**ET200030**	Nut	B5.0X12 MFZN2Y				
	10a3	**ET200080**	Nut	B3.0X9.5 MFZN2Y				
	10b	**V8040100**	Cushion Rubber Black					
*	10c	**V8814100**	Cushion Rubber Black					
	10d	**VR707800**	Foot	K3019			5	02
	10e	**VB403600**	Bind Head Screw	4.0X20 MFZN2BL			5	01
	10f	**--**	Tape	25.4MMX16.4		(2205340)		
*	20	**V8594600**	Front Rail Assembly					
	30	**EP030340**	Bind Head Tapping Screw-1	3.5X12 MFZN2BL			5	01
	40	**EG330320**	Bind Head Tapping Screw-1	3.5X12 MFZN2BL			2	01
	50	**V7411600**	Keyboard Assembly	A88 K6				51
*	60	**VK109800**	Connector Assembly	8P-400				
	62	**VA126100**	Adhesive Tape	12X50				03
	70	**VV040700**	Pan Head Screw	5.0X25 MFZN2Y PW			9	01
	80	**EP040230**	Bind Head Tapping Screw-1	4.0X14 MFZN2Y			2	01
*	90	**V8594800**	Control Panel Assembly					
	100	**EP600190**	Bind Head Tapping Screw-B	3.0X8 MFZN2BL			4	01
*	110	**V8597100**	Side Cover Right					
*	120	**V8597200**	Side Cover Left					
	130	**EP600190**	Bind Head Tapping Screw-B	3.0X8 MFZN2BL			6	01
	140	**VB934000**	Bind Head Screw	4.0X20 MFZN2BL			12	01
	142	**VA126100**	Adhesive Tape	12X50				03
*	144	**V8974200**	Cover					
	146	**EP600190**	Bind Head Tapping Screw-B	3.0X8 MFZN2BL			4	01
	150	**VK348200**	Cup Screw	4.0X18 MFZN2Y				
			ACCESSORIES					
*		**--**	CD-ROM	Tools for S08		(X2475B0)		
			Accessory of the CD-ROM is not a Service Part.					
⚠ *		**VU113800**	AC Adapter	PA-5C J		J		
⚠ *		**VU113700**	AC Adapter	PA-5C U/C		U		
⚠ *		**V8029200**	AC Adapter	PA-5D E		E		

*: New parts

RANK: Japan only

■ CONTROL PANEL ASSEMBLY

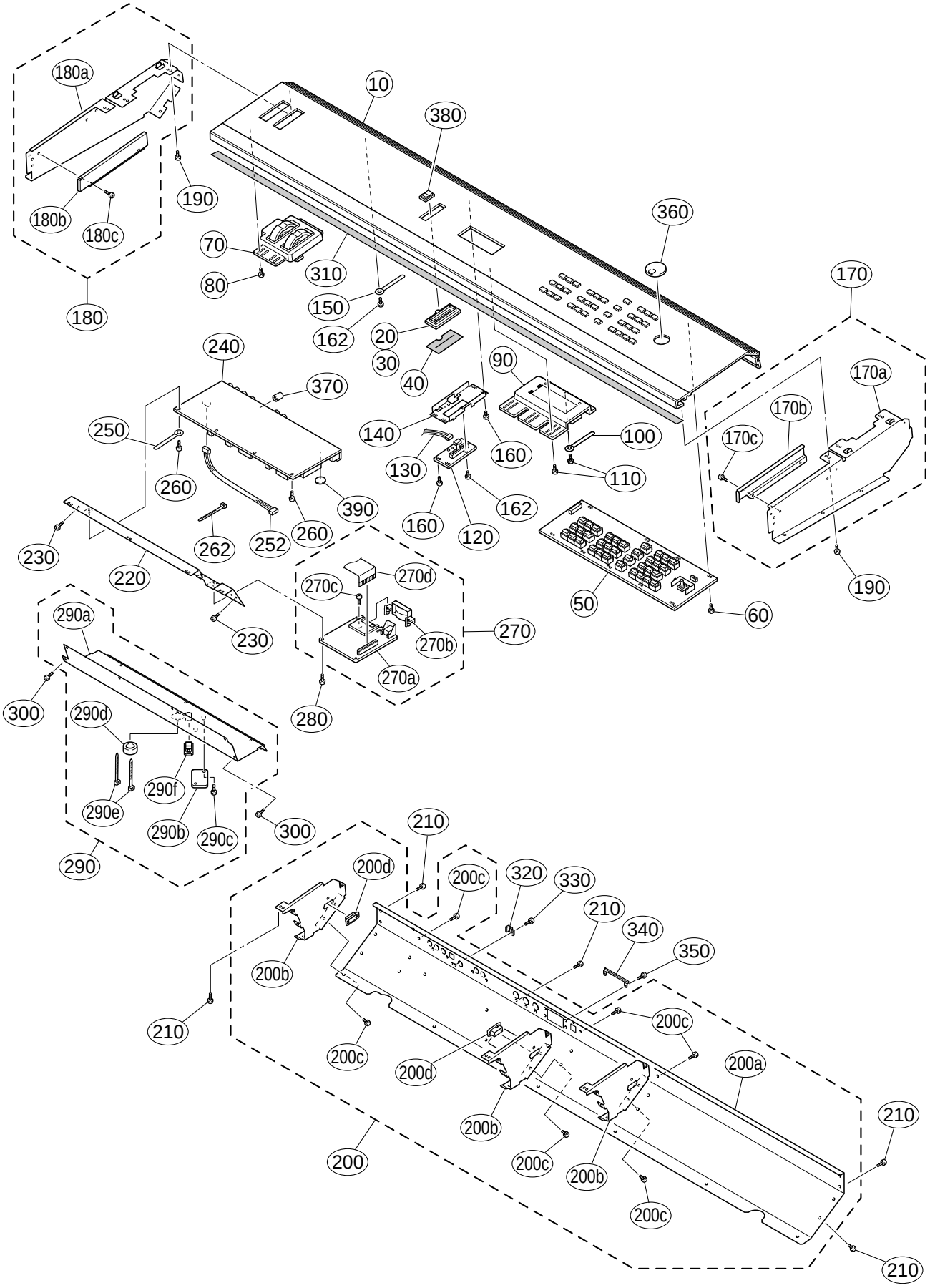

	REF NO.	PART NO.	DESCRIPTION			REMARKS	QTY	RANK
			CONTROL PANEL ASSEMBLY			S08		
*		**V8594800**	Control Panel Assembly					
*	10	**V8594900**	Control Panel					
	20	**V2772900**	SRV Escutcheon	EX5				04
	30	**VU354700**	Tape	5X20			2	
	40	**VH810100**	Dust-Proof Cloth					01
*	50	**V8597600**	Circuit Board Assembly	SW		(X2189B0)		
	60	**EP600190**	Bind Head Tapping Screw-B	3.0X8 MFZN2BL			9	01
*	70	**V8600800**	Wheel Assembly					
	80	**EP600190**	Bind Head Tapping Screw-B	3.0X8 MFZN2BL			4	01
*	90	**V8598100**	LCD Assembly					
	100	**CB829850**	Cord Binder	S-34Z				03
	110	**EP600190**	Bind Head Tapping Screw-B	3.0X8 MFZN2BL			6	01
*	120	**V8626100**	Circuit Board	VOL		(X2189B0)		
*	130	**V8626300**	Connector Assembly	KR-KR 6P 550L				
*	140	**V8598300**	Angle, VOL	1				
	150	**CB829850**	Cord Binder	S-34B				03
	160	**EP600190**	Bind Head Tapping Screw-B	3.0X8 MFZN2BL			4	01
	162	**EP600230**	Bind Head Tapping Screw-B	3.0X6 MFZN2BL			3	01
*	170	**V8598400**	Angle R Assembly					
*	170a	**V8598600**	Side Angel	Right				
*	170b	**V8598800**	End Block	Right				
	170c	**EP600230**	Bind Head Tapping Screw-B	3.0X6 MFZN2BL			2	01
*	180	**V8598500**	Angle L Assembly					
*	180a	**V8598700**	Side Angle	LEFT				
*	180b	**V8598900**	End Block	LEFT				
	180c	**EP600230**	Bind Head Tapping Screw-B	3.0X6 MFZN2BL			2	01
	190	**EP600230**	Bind Head Tapping Screw-B	3.0X6 MFZN2BL			6	01
*	200	**V8599000**	Rear Panel Assembly					
*	200a	**V8599100**	Rear Panel					
*	200b	**V8599300**	Angle Bracket, Panel	1.6 C			3	
	200c	**EP600190**	Bind Head Tapping Screw-B	3.0X8 MFZN2BL			9	01
	200d	**V3079400**	Bushing	SB-1909			2	01
	210	**EP600190**	Bind Head Tapping Screw-B	3.0X8 MFZN2BL			15	01
	220	**--**	Shield Plate A, DM	0.8 C		(V859950)		
	230	**EP600230**	Bind Head Tapping Screw-B	3.0X6 MFZN2BL			5	01
*	240	**V8620800**	Circuit Board	DM		(XZ144G0)		
	250	**CB829850**	Cord Binder	S-34Z			2	03
*	252	**V8795600**	Cable Assembly	6P				
	260	**EP600190**	Bind Head Tapping Screw-B	3.0X8 MFZN2BL			9	01
	262	**CB069250**	Cord Holder	BK-1				01
	270	**--**	Circuit Board Assembly	US		(V860050)		
*	270a	**V8395300**	Circuit Board	US		(X2190B0)		
	270b	**V3882500**	SM Escutcheon	K-CB				01
	270c	**EP600190**	Bind Head Tapping Screw-B	3.0X8 MFZN2BL			2	01
*	270d	**MF136120**	Connector Assembly	36P 120mm P=1.25				
	280	**EP600190**	Bind Head Tapping Screw-B	3.0X8 MFZN2BL			4	01
	290	**--**	Shield Plate B Assembly			(V897280)		
	290a	**--**	Shield Plate	B		(V897340)		
*	290b	**V8893800**	Circuit Board	KB		(X2189B0)		
	290c	**EP600230**	Bind Head Tapping Screw-B	3.0X6 MFZN2BL			2	01
	290d	**VC362700**	Ferrite Core	FR25/15/12-1400L				04
	290e	**CB069250**	Cord Holder	BK-1			2	01
	290f	**V3079400**	Bushing	SB-1909				01
	300	**EP600190**	Bind Head Tapping Screw-B	3.0X8 MFZN2BL			9	01
	310	**V4063000**	Felt	LM				03
	320	**VG016600**	Cord Column	WT11				01
	330	**EP600190**	Bind Head Tapping Screw-B	3.0X8 MFZN2BL				01
	340	**V3883200**	Angle, AS	K-AA				03
	350	**EP630210**	Bind Head Tapping Screw-S	3.0X6 MFZN2BL			2	01
	360	**V6923600**	Encoder Knob	K-CB		Data Dial		02
	370	**CB825380**	Push Button			STANBY/ON		03
	380	**VB774000**	Knob, VR			VOLUME		01
⚠	390	**VN103500**	Lithium Battery	CR2032				

*: New parts

RANK: Japan only

■ SW CIRCUIT BORAD ASSEMBLY

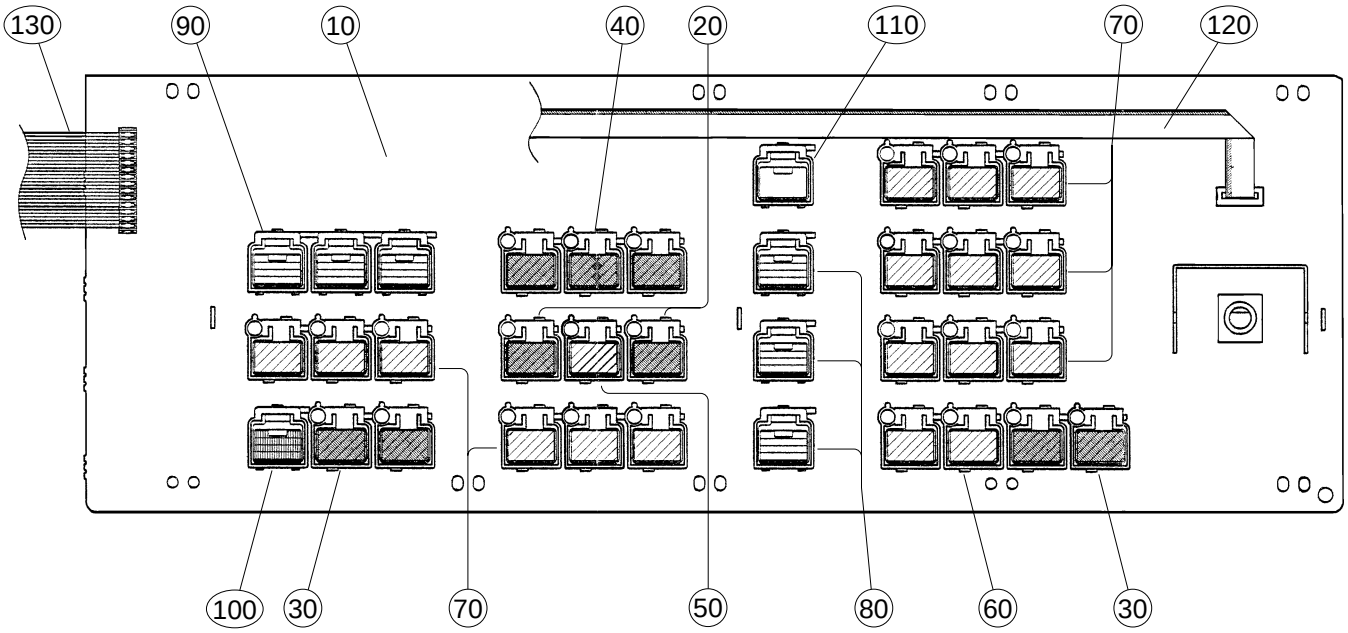

	REF NO.	PART NO.	DESCRIPTION			REMARKS	QTY	RANK
			CIRCUIT BOARD ASSEMBLY			S08		
*		**V8597600**	Circuit Board Assembly	SW				
*	10	**V8626000**	Circuit Board	SW		(X2189B0)		
	20	**V4162600**	Push Button	M1B		DEC/NO, INC/YES	2	01
	30	**V4162700**	Push Button	M2B		JOB, STORE, PLAY/STOP,	2	01
*	40	**V8599800**	Push Button	M3B		ENTER, KEYBOARD, EXIT +, COMMON, -, MUTE		
	50	**V7039900**	Push Button	M1DG		▲		01
	60	**V7237100**	Push Button	M2DG		SYN COMP, CHOROMATIC PECUSSIon		01
*	70	**V8600000**	Push Button	M3DG		UTLITY, CONTROLLER, CARD, ◄, ▼, ►, 7, 8, 9, 4, 5, 6, 1, REED/PIPE, 2, SYN LEAD, 3, SYN PAD	5	
	80	**V6776800**	Push Button	MR1G		PRESET, DRUM/PERC, USER,	3	01
	90	**V7039600**	Push Button	MR3G		SE, GMX2/XG, OTHER VOICE, MULTI, SEQ PLAY, DEMO		03
	100	**V6776500**	Push Button	MR1B		EDIT, COMPARE		01
*	110	**V8600100**	Push Button	MR1LG		CATEGORY SEACH		
*	120	**V8795500**	Cable Assembly	4P				
*	130	**VK111600**	Connector Assembly	14P-450				

*: New parts

RANK: Japan only

■ HED KEYBOARD ASSEMBLY

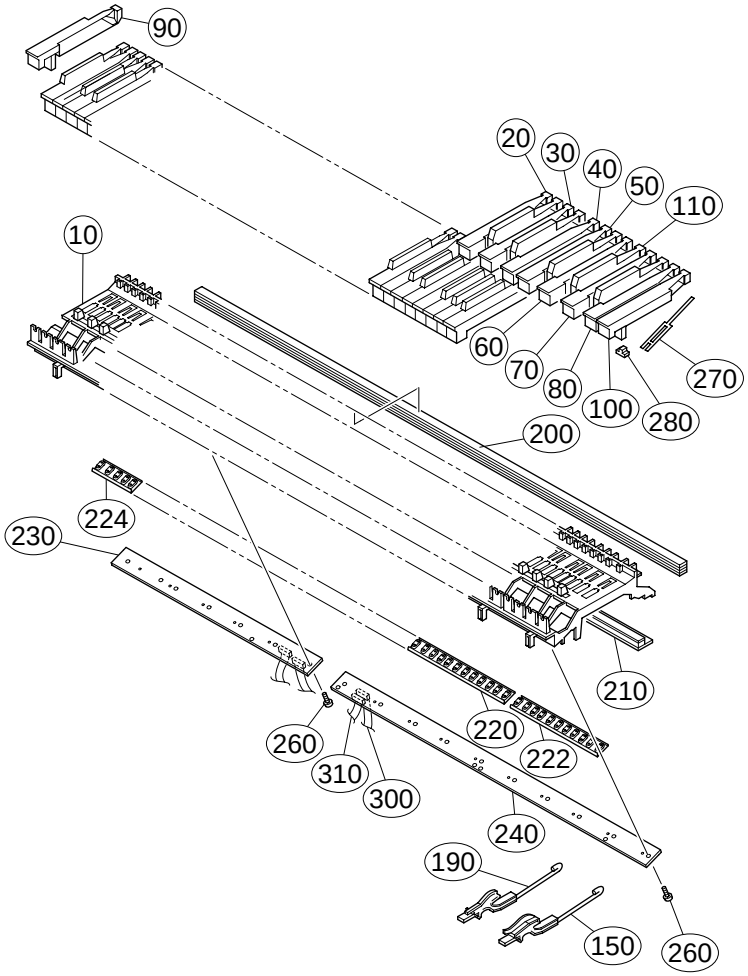

REF NO.	PART NO.	DESCRIPTION			REMARKS	QTY	RANK
		KEYBOARD ASSEMBLY			S08		
	V7411600	Keyboard Assembly	A88 K6				51
* 10	**VU422100**	MK Frame					
20	**VU101000**	White Key White				7	05
30	**VU101100**	White Key White				7	05
40	**VU101200**	White Key White				7	05
50	**VU101300**	White Key White				7	05
60	**VU101400**	White Key White				7	05
70	**VU101500**	White Key White				7	05
80	**VU101600**	White Key White				8	05
90	**VU101700**	White Key White					05
100	**VU101800**	White Key White					05
110	**VU102100**	Black Key White				36	05
150	**VY828800**	Hammer, White Key4				52	05
190	**VY829200**	Hammer, Black Key4				36	05
200	**VU342100**	Stopper	1229X12X14.8T				09
210	**V7640100**	Stopper	1239.5X28X10.1T				07
220	**VY846700**	Seesaw Dome	GH 2M OCT			6	08
222	**VY846800**	Seesaw Dome	GH 2M OCT				08
224	**VY846900**	Seesaw Dome	GH 2M OCT				08
230	**V7411800**	Circuit Board	HE-D_SW L		(XT240A0)		10
240	**VZ705300**	Circuit Board	GH-D_SW H		(XT241A0)		13
260	**VT413400**	Bind Head Tapping Screw-P	3.0X10 MFZN2			17	01
270	**V2798500**	Spring R White/Black	GH			88	
280	**V2211300**	Rubber 2	GH,GHD,HE			88	03
290	--	Grease	G-1006Y		(V627430)		
300	**VU341800**	Connector Assembly, Block	9P				06
310	**VU341900**	Connector Assembly, Note	12P				07
320	--	Dry Grease	FL-78A		(VU95710)		

*: New parts

RANK: Japan only

■ LCD ASSEMBLY

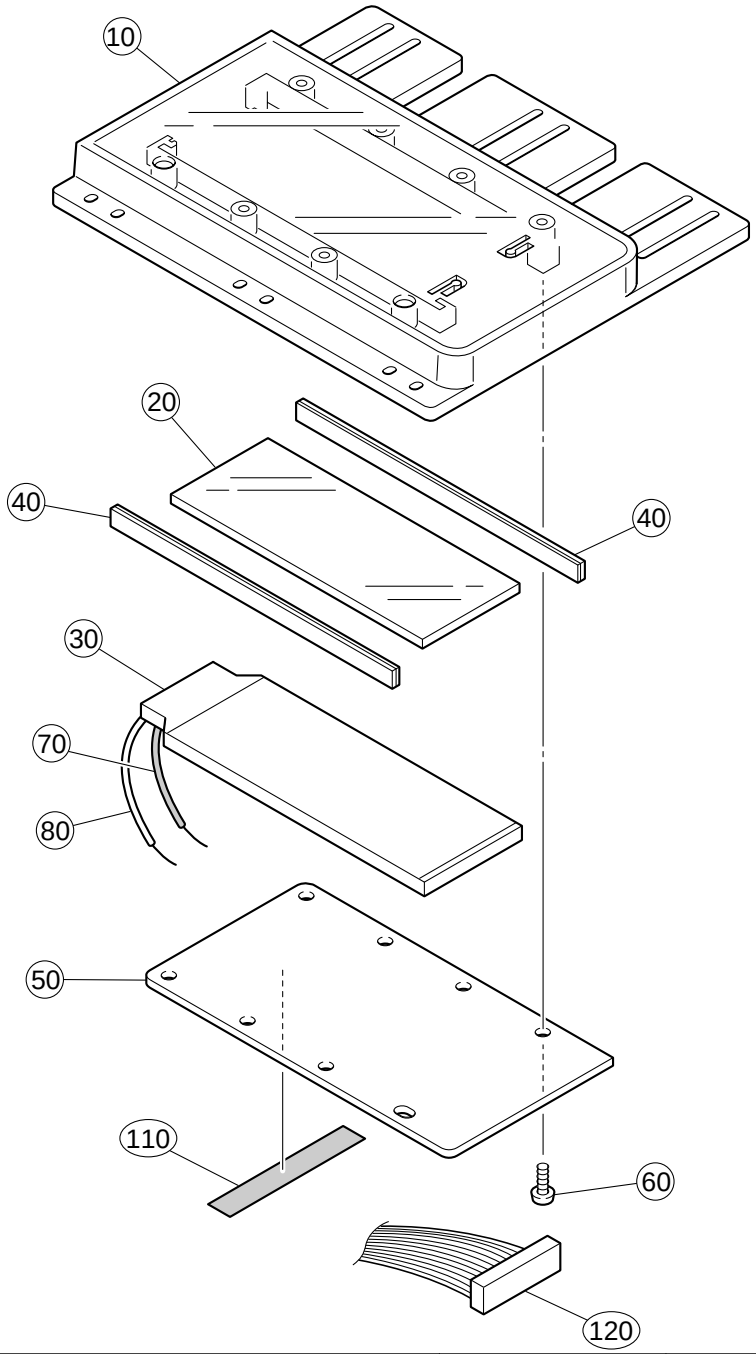

	REF NO.	PART NO.	DESCRIPTION			REMARKS	QTY	RANK
			LCD ASSEMBLY			S08		
*		**V8598100**	LCD Assembly					
*	10	**V8598200**	LCD Escutcheon	LCD AS				
*	20	**V8624300**	LCD	TSB0794-DGTDCN-C1				
	30	**V5264900**	Back Light Assembly	A PT				07
	40	**V3755900**	Rubber Connector	SS-105L			2	01
	50	**V6760100**	Circuit Board	LC		(XZ147B0)		08
	60	**EP600280**	Bind Head Tapping Screw-P	3.0X8 MFZN2Y			8	01
	70	--	Wire	A		(V675990)		
	80	--	Wire	B		(V676000)		
	110	--	Adhesive Tape	12X60		(VM72270)		
	120	--	Connector Assembly	15P-500		(VK11300)		

*: New parts

RANK: Japan only

■ WHEEL ASSEMBLY 683

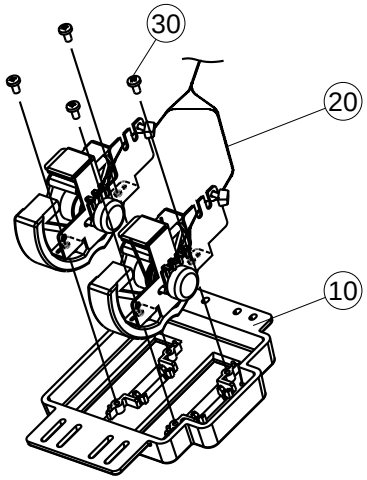

	REF NO.	PART NO.	DESCRIPTION			REMARKS	QTY	RANK
			WHEEL ASSEMBLY			S08		
*		**V8600800**	Wheel Assembly					
*	10	**V8598000**	Wheel Escutcheon					
*	20	**V8597900**	Wheel Assembly					
	30	**EP600230**	Bind Head Tapping Screw-B	3.0X6 MFZN2BL			4	01

■ WHEEL ASSEMBLY

●PITCH BEND（ピッチベンド）

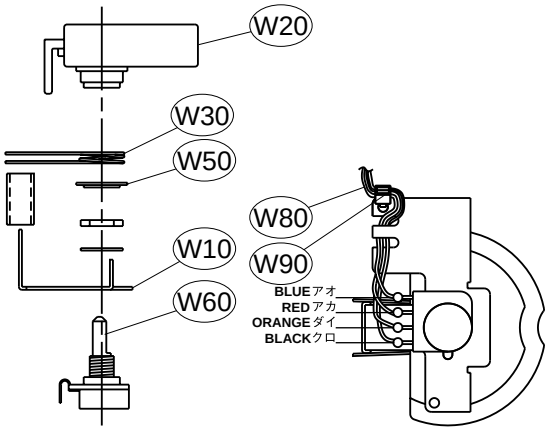

●MODULATION（モジュレーション）

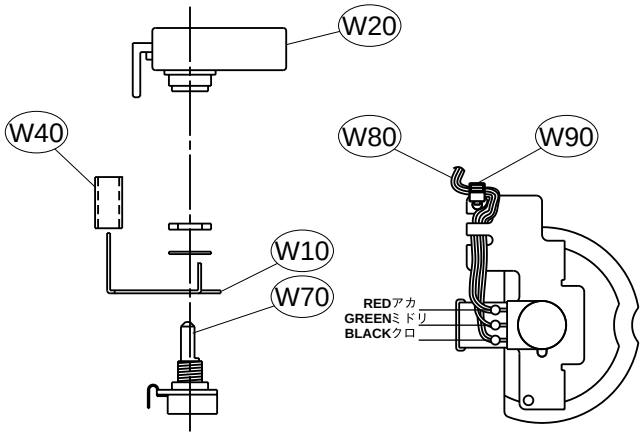

	REF NO.	PART NO.	DESCRIPTION			REMARKS	QTY	RANK
			WHEEL ASSEMBLY			S08		
*		**V8597900**	Wheel Assembly					
	W10	**VF536800**	Frame				2	02
	W20	**V4579900**	Wheel	EX			2	04
	W30	**VC792800**	Spring					01
	W40	**CB819020**	Wheel Tube				2	04
	W50	**EW600110**	Stop Ring	12				01
	W60	**VQ764300**	Rotary Variable Resistor	RK1631110T54A 10K		PITCH BEND		03
	W70	**VN245400**	Rotary Variable Resistor	10.0K K161100S		MODULATION		03
	W80	**--**	Connector Assembly	7F-PH5P 140L+X		(V875590)		
	W90	**CB069250**	Cord Holder	BK-1			2	01

*: New parts

RANK: Japan only

■ ELECTRICAL PARTS

	REF NO.	PART NO.	DESCRIPTION			REMARKS	QTY	RANK
			ELECTRICAL PARTS			S08		
*		**V8620800**	Circuit Board	DM		(XZ144G0)		
		VZ705300	Circuit Board	GH-D_SW H		(XT241A0)		13
		V7411800	Circuit Board	HE-D_SW L		(XT240A0)		10
		V6760100	Circuit Board	LC		(XZ147B0)		08
*		**V8626000**	Circuit Board	SW		(X2189B0)		
*		**V8626100**	Circuit Board	VOL		(X2189B0)		
*		**V8893800**	Circuit Board	KB		(X2189B0)		
*		**V8395300**	Circuit Board	US		(X2190B0)		
*		**V8620800**	Circuit Board	DM		(XZ144G0)		
	20	**--**	Holder, Jack			(V776760)		
	40	**EG330360**	Bind Head Screw	3.0X6 MFZN2BL				01
	BT001	**VN103600**	Battery Holder	CR2032				03
	C0001	**US064100**	Ceramic Capacitor-B (chip)	0.0100 50V K				01
	C0002	**US063220**	Ceramic Capacitor-B (chip)	2200P 50V K				01
	C0003	**US063220**	Ceramic Capacitor-B (chip)	2200P 50V K				01
	C0004	**US064100**	Ceramic Capacitor-B (chip)	0.0100 50V K				01
	C0005	**VH340500**	Electrolytic Cap.-RS	470.00 25.0V				01
	C0006	**UI548100**	Electrolytic Cap.	100.00 25.0V				01
	C0007	**VH340500**	Electrolytic Cap.-RS	470.00 25.0V				01
	C0008	**UF138220**	Electrolytic Cap. (chip)	220 16V UUR1C2				01
	C0010	**UF038100**	Electrolytic Cap. (chip)	100 16V				01
	C0011	**UF037470**	Electrolytic Cap. (chip)	47 16V				01
	C0012	**US063100**	Ceramic Capacitor-B (chip)	1000P 50V K				01
	C0013	**US063100**	Ceramic Capacitor-B (chip)	1000P 50V K				01
	C0014	**UF037470**	Electrolytic Cap. (chip)	47 16V				01
	C0015	**UF037220**	Electrolytic Cap. (chip)	22 16V				01
	C0016	**UF138220**	Electrolytic Cap. (chip)	220 16V UUR1C2				01
	C0017	**UF037220**	Electrolytic Cap. (chip)	22 16V				01
	C0018	**UF138220**	Electrolytic Cap. (chip)	220 16V UUR1C2				01
	C0019	**US062470**	Ceramic Capacitor-SL(chip)	470P 50V J				01
	C0020	**US062470**	Ceramic Capacitor-SL(chip)	470P 50V J				01
	C0021	**UF037100**	Electrolytic Cap. (chip)	10 16V				01
	C0022	**US062100**	Ceramic Capacitor-SL(chip)	100P 50V J				01
	C0023	**US062100**	Ceramic Capacitor-SL(chip)	100P 50V J				01
	C0024	**UF056330**	Electrolytic Cap. (chip)	3.3 35V				01
	C0025	**US061270**	Ceramic Capacitor-CH(chip)	27P 50V J				01
	C0026	**US061270**	Ceramic Capacitor-CH(chip)	27P 50V J				01
	C0027	**UF037100**	Electrolytic Cap. (chip)	10 16V				01
	C0028	**UF037100**	Electrolytic Cap. (chip)	10 16V				01
	C0029	**US064100**	Ceramic Capacitor-B (chip)	0.0100 50V K				01
	-0038	**US064100**	Ceramic Capacitor-B (chip)	0.0100 50V K				01
	C0039	**UF037100**	Electrolytic Cap. (chip)	10 16V				01
	-0042	**UF037100**	Electrolytic Cap. (chip)	10 16V				01
	C0046	**US061470**	Ceramic Capacitor-CH(chip)	47P 50V J				01
	C0047	**US061470**	Ceramic Capacitor-CH(chip)	47P 50V J				01
	C0053	**US064100**	Ceramic Capacitor-B (chip)	0.0100 50V K				01
	C0060	**US062100**	Ceramic Capacitor-SL(chip)	100P 50V J				01
	C0061	**US062100**	Ceramic Capacitor-SL(chip)	100P 50V J				01
	C0062	**US062820**	Ceramic Capacitor-B (chip)	820P 50V K				01
	C0063	**US064100**	Ceramic Capacitor-B (chip)	0.0100 50V K				01
	-0065	**US064100**	Ceramic Capacitor-B (chip)	0.0100 50V K				01
	C0066	**US062820**	Ceramic Capacitor-B (chip)	820P 50V K				01
	C0067	**US064100**	Ceramic Capacitor-B (chip)	0.0100 50V K				01
	-0070	**US064100**	Ceramic Capacitor-B (chip)	0.0100 50V K				01
	C0071	**UF037100**	Electrolytic Cap. (chip)	10 16V				01
	C0072	**US064100**	Ceramic Capacitor-B (chip)	0.0100 50V K				01
	-0080	**US064100**	Ceramic Capacitor-B (chip)	0.0100 50V K				01
	C0081	**UF037100**	Electrolytic Cap. (chip)	10 16V				01
	C0082	**US064100**	Ceramic Capacitor-B (chip)	0.0100 50V K				01
	C0084	**US064100**	Ceramic Capacitor-B (chip)	0.0100 50V K				01
	C0088	**US064100**	Ceramic Capacitor-B (chip)	0.0100 50V K				01
	-0090	**US064100**	Ceramic Capacitor-B (chip)	0.0100 50V K				01
	C0091	**UF037100**	Electrolytic Cap. (chip)	10 16V				01
	C0092	**US064100**	Ceramic Capacitor-B (chip)	0.0100 50V K				01
	C0093	**US064100**	Ceramic Capacitor-B (chip)	0.0100 50V K				01
	C0094	**UF037100**	Electrolytic Cap. (chip)	10 16V				01
	C0095	**UF037100**	Electrolytic Cap. (chip)	10 16V				01
	C0096	**US062680**	Ceramic Capacitor-SL(chip)	680P 50V J				01
	C0097	**UB052100**	Monolithic Ceramic Cap.	SL 100P 50V J				01
	C0098	**US062680**	Ceramic Capacitor-SL(chip)	680P 50V J				01
	C0099	**UB052100**	Monolithic Ceramic Cap.	SL 100P 50V J				01
	C0100	**UF038100**	Electrolytic Cap. (chip)	100 16V				01
	C0101	**US062100**	Ceramic Capacitor-SL(chip)	100P 50V J				01

*: New parts

RANK: Japan only

REF NO.	PART NO.	DESCRIPTION			REMARKS	QTY	RANK
C0102	**US064100**	Ceramic Capacitor-B (chip)	0.0100 50V K				01
C0103	**US064100**	Ceramic Capacitor-B (chip)	0.0100 50V K				01
C0104	**US062680**	Ceramic Capacitor-SL(chip)	680P 50V J				01
C0105	**US062100**	Ceramic Capacitor-SL(chip)	100P 50V J				01
C0106	**US062680**	Ceramic Capacitor-SL(chip)	680P 50V J				01
C0107	**US064100**	Ceramic Capacitor-B (chip)	0.0100 50V K				01
-0109	**US064100**	Ceramic Capacitor-B (chip)	0.0100 50V K				01
C0110	**US061470**	Ceramic Capacitor-CH(chip)	47P 50V J				01
-0117	**US061470**	Ceramic Capacitor-CH(chip)	47P 50V J				01
C0118	**US063560**	Ceramic Capacitor-B (chip)	5600P 50V K				01
C0119	**US063560**	Ceramic Capacitor-B (chip)	5600P 50V K				01
C0120	**US064100**	Ceramic Capacitor-B (chip)	0.0100 50V K				01
C0121	**UF037100**	Electrolytic Cap. (chip)	10 16V				01
C0122	**UF037100**	Electrolytic Cap. (chip)	10 16V				01
C0123	**UF037470**	Electrolytic Cap. (chip)	47 16V				01
C0124	**UF037470**	Electrolytic Cap. (chip)	47 16V				01
C0125	**UF038100**	Electrolytic Cap. (chip)	100 16V				01
C0126	**UF037100**	Electrolytic Cap. (chip)	10 16V				01
C0127	**US064100**	Ceramic Capacitor-B (chip)	0.0100 50V K				01
C0128	**UF037220**	Electrolytic Cap. (chip)	22 16V				01
C0129	**US064100**	Ceramic Capacitor-B (chip)	0.0100 50V K				01
C0130	**US064100**	Ceramic Capacitor-B (chip)	0.0100 50V K				01
C0131	**UF037470**	Electrolytic Cap. (chip)	47 16V				01
C0134	**US135100**	Ceramic Capacitor-F (chip)	0.1000 16V Z				01
C0135	**US064100**	Ceramic Capacitor-B (chip)	0.0100 50V K				01
-0138	**US064100**	Ceramic Capacitor-B (chip)	0.0100 50V K				01
C0139	**UF038100**	Electrolytic Cap. (chip)	100 16V				01
C0140	**US135100**	Ceramic Capacitor-F (chip)	0.1000 16V Z				01
-0143	**US135100**	Ceramic Capacitor-F (chip)	0.1000 16V Z				01
C0144	**UF037100**	Electrolytic Cap. (chip)	10 16V				01
C0145	**UF037100**	Electrolytic Cap. (chip)	10 16V				01
C0146	**US135100**	Ceramic Capacitor-F (chip)	0.1000 16V Z				01
C0147	**US064100**	Ceramic Capacitor-B (chip)	0.0100 50V K				01
C0148	**UF037100**	Electrolytic Cap. (chip)	10 16V				01
C0149	**US064100**	Ceramic Capacitor-B (chip)	0.0100 50V K				01
-0152	**US064100**	Ceramic Capacitor-B (chip)	0.0100 50V K				01
C0153	**UF037100**	Electrolytic Cap. (chip)	10 16V				01
C0154	**VD989700**	Tantalum Cap.	4.70 16V M				03
C0155	**US061470**	Ceramic Capacitor-CH(chip)	47P 50V J				01
C0156	**US061470**	Ceramic Capacitor-CH(chip)	47P 50V J				01
C0157	**US063220**	Ceramic Capacitor-B (chip)	2200P 50V K				01
-0160	**US063220**	Ceramic Capacitor-B (chip)	2200P 50V K				01
C0161	**VR813200**	Ceramic Capacitor-B (chip)	1.0 16V K				01
-0163	**VR813200**	Ceramic Capacitor-B (chip)	1.0 16V K				01
C0164	**US135100**	Ceramic Capacitor-F (chip)	0.1000 16V Z				01
C0165	**US135100**	Ceramic Capacitor-F (chip)	0.1000 16V Z				01
C0166	**US064100**	Ceramic Capacitor-B (chip)	0.0100 50V K				01
CN001	**VB390200**	Connector Base Post	PH- 6P TE				01
CN002	**VK024800**	Wire Trap	52147 4P TE				01
CN003	**VF728300**	Wire Trap	52147 6P TE				01
CN004	**VF283300**	Connector Base Post	PH-15P TE				01
CN005	**VB390100**	Connector Base Post	PH- 5P TE				01
CN006	**VE352600**	Connector Base Post	PH-14P TE				01
CN007	**VQ048500**	Connector Assembly	FFC 52045 36P TE				02
D0001	**VZ016600**	Diode	D3FP3				03
D0002	**VT332900**	Diode	1SS355 TE-17				01
D0009	**VS201100**	Diode	D1F60				01
D0010	**VZ016600**	Diode	D3FP3				03
D0011	**VS201100**	Diode	D1F60				01
D0012	**VS201100**	Diode	D1F60				01
D0013	**VT332900**	Diode	1SS355 TE-17				01
D0014	**VT332900**	Diode	1SS355 TE-17				01
D0015	**VV925900**	Diode	RLS-73 TE-11				01
D0021	**VT332900**	Diode	1SS355 TE-17				01
-0026	**VT332900**	Diode	1SS355 TE-17				01
EM001	**VR193800**	LC Filter	STF-104ZB-TBM				01
EM002	**VR193800**	LC Filter	STF-104ZB-TBM				01
EM003	**V6196600**	EMI Filter (chip)	NFM4516P13C204FT1				01
-0011	**V6196600**	EMI Filter (chip)	NFM4516P13C204FT1				01
IC001	**XU947C00**	IC	HG73C205AFD		SWX00B		09
IC002	**XU947C00**	IC	HG73C205AFD		SWX00B		09
IC003	**XT138A00**	IC	UPD431000AGW-70LL		SRAM UPPER		07
IC004	**XT138A00**	IC	UPD431000AGW-70LL		SRAM LOWER		07
* IC005	**X2380D00**	IC	683V104		FLASH ROM 16M		
IC006	**XZ193100**	IC	WAVE		ROM1 64M		10

*: New parts

RANK: Japan only

REF NO.	PART NO.	DESCRIPTION			REMARKS	QTY	RANK
IC007	**XZ194100**	IC	WAVE		ROM2 64M		10
IC009	**XT441A00**	IC	UPC2909T-E1		REGULATOR +9V		03
IC010	**XS516A00**	IC	UPC2933T-E1		REGULATOR +3.3V		03
IC012	**XV077B00**	IC	MSM514260E-60JS		DRAM 4M		
IC013	**XQ138A00**	IC	NJM4556AM(T1)		OP AMP		03
IC015	**XT442A00**	IC	SI-8050S		REGULATOR +5V		05
IC016	**XF291A00**	IC	UPC4570G2		OP AMP		03
IC017	**XI686A00**	IC	M62021FP		SYSTEM RESET		04
IC018	**XP867A00**	IC	UPD63200GS-E1		DAC		07
IC019	**XF291A00**	IC	UPC4570G2		OP AMP		03
IC020	**XR294A00**	IC	NJM3414AM(T1)		OP AMP		02
IC021	**XR682A00**	IC	TC7S66F		BILATERAL SWITCH		01
IC022	**XJ598A00**	IC	NJM78L05UA		REGULATOR +5V		02
IC023	**VN686000**	Photo Coupler	PC410T				04
IC024	**XI297A00**	IC	TC74HCT04AF-T1		INVERTER		01
IC026	**XY153A00**	IC	MM74HC74ASJX		D-FF		01
IC027	**XM909A00**	IC	SN74HCT245NSR		BUS-TRANSCEIVER		03
IC028	**XW793A00**	IC	SN74HC138NSR		DECODER		01
IC029	**XW104A00**	IC	MM74HC14SJX		INVERTER		01
IC030	**XV833A00**	IC	MBCG46183-129PFV-G		SIO4		06
IC031	**XY096A00**	IC	TC74HCT32AF(EL)		OR		01
IC032	**XV892A00**	IC	TC74VHC74FT		D-FF		01
IC033	**XY364A00**	IC	TC7WH32FU(TE12L)OR		OR		01
JK001	**VE382300**	Phone Jack	YKB21-5010		PHONE		01
JK002	**VS115400**	Phone Jack	LGR4609-7000		OUTPUT L/MONO, OUTPUT R,		01
-005	**VS115400**	Phone Jack	LGR4609-7000		FOOT CONTROLLER, FOOT SW		01
JK007	**VT033600**	DIN Connector	3P YKF51-5067		MIDI IN		03
JK008	**VJ885500**	DIN Connector	3P YKF51-5054		MIDI THRU/MIDI OUT		04
JK009	**LB302260**	Connector	HEC0470-01-630		DC-IN		02
K0001	**BA808520**	Heat Sink	T220M 25L				03
L0001	**VL139800**	Chip Solid Inductance	BLM31A700SPT 70ohm				01
-0003	**VL139800**	Chip Solid Inductance	BLM31A700SPT 70ohm				01
L0004	**VR579900**	Chip Inductance	BK2125HS601-T				01
-0007	**VR579900**	Chip Inductance	BK2125HS601-T				01
L0008	**VL139800**	Chip Solid Inductance	BLM31A700SPT 70ohm				01
L0009	**VL139800**	Chip Solid Inductance	BLM31A700SPT 70ohm				01
L0025	**VR579900**	Chip Inductance	BK2125HS601-T				01
L0026	**VR579900**	Chip Inductance	BK2125HS601-T				01
L0027	**VR579900**	Chip Inductance	BK2125HS601-T				01
L0029	**VZ017900**	Coil	HP-022J 180uH				05
L0030	**VR579900**	Chip Inductance	BK2125HS601-T				01
-0033	**VR579900**	Chip Inductance	BK2125HS601-T				01
L0041	**VR579900**	Chip Inductance	BK2125HS601-T				01
-0051	**VR579900**	Chip Inductance	BK2125HS601-T				01
RA002	**RE044000**	Resistor Array (chip)	0X4				01
-008	**RE044000**	Resistor Array (chip)	0X4				01
RA009	**RE045100**	Resistor Array	100X4				01
RA010	**RE045100**	Resistor Array	100X4				01
RA013	**RE044000**	Resistor Array (chip)	0X4				01
-018	**RE044000**	Resistor Array (chip)	0X4				01
RA019	**RE047220**	Resistor Array	22KX4				01
RA020	**RE046100**	Resistor Array	1KX4				01
RA021	**RE047220**	Resistor Array	22KX4				01
RA022	**RE047220**	Resistor Array	22KX4				01
RA024	**RE045100**	Resistor Array	100X4				01
RA025	**RE047220**	Resistor Array	22KX4				01
-029	**RE047220**	Resistor Array	22KX4				01
RA030	**RE044000**	Resistor Array (chip)	0X4				01
R0001	**RD256470**	Carbon Resistor (chip)	4.7K 0.1 J				01
R0002	**RD356100**	Carbon Resistor (chip)	1.0K 63M J				01
R0003	**RD356100**	Carbon Resistor (chip)	1.0K 63M J				01
R0005	**RD255220**	Carbon Resistor (chip)	220.0 0.1 J				01
-0010	**RD255220**	Carbon Resistor (chip)	220.0 0.1 J				01
R0012	**RD356100**	Carbon Resistor (chip)	1.0K 63M J				01
R0013	**RD154470**	Carbon Resistor (chip)	47.0 1/4 J				01
R0014	**RD355100**	Carbon Resistor (chip)	100 63M J				01
R0015	**RD154470**	Carbon Resistor (chip)	47.0 1/4 J				01
R0016	**RD356100**	Carbon Resistor (chip)	1.0K 63M J				01
R0017	**RD356100**	Carbon Resistor (chip)	1.0K 63M J				01
R0018	**RD357100**	Carbon Resistor (chip)	10K 63M J				01
R0020	**RD355560**	Carbon Resistor (chip)	560 63M J				01
R0021	**RD356100**	Carbon Resistor (chip)	1.0K 63M J				01
R0022	**RD357100**	Carbon Resistor (chip)	10K 63M J				01
R0023	**RD357100**	Carbon Resistor (chip)	10K 63M J				01
R0029	**RD357100**	Carbon Resistor (chip)	10K 63M J				01

∗: New parts

RANK: Japan only

REF NO.	PART NO.	DESCRIPTION			REMARKS	QTY	RANK
-0031	**RD357100**	Carbon Resistor (chip)	10K 63M J				01
R0032	**RD357120**	Carbon Resistor (chip)	12K 63M J				01
R0033	**RD357120**	Carbon Resistor (chip)	12K 63M J				01
R0034	**RD350000**	Carbon Resistor (chip)	0 63M J				01
R0035	**RD357470**	Carbon Resistor (chip)	47K 63M J				01
R0036	**RD350000**	Carbon Resistor (chip)	0 63M J				01
R0037	**RD357470**	Carbon Resistor (chip)	47K 63M J				01
R0038	**RD357220**	Carbon Resistor (chip)	22K 63M J				01
R0039	**RD357220**	Carbon Resistor (chip)	22K 63M J				01
R0040	**RD356680**	Carbon Resistor (chip)	6.8K 63M J				01
R0041	**RD356680**	Carbon Resistor (chip)	6.8K 63M J				01
R0042	**RD355100**	Carbon Resistor (chip)	100 63M J				01
R0043	**RD355100**	Carbon Resistor (chip)	100 63M J				01
R0044	**RD358100**	Carbon Resistor (chip)	100K 63M J				01
R0045	**RD358100**	Carbon Resistor (chip)	100K 63M J				01
R0046	**RD356100**	Carbon Resistor (chip)	1.0K 63M J				01
R0047	**VI197400**	Carbon Resistor (chip)	10.0K 1/10 D				01
R0048	**VI197400**	Carbon Resistor (chip)	10.0K 1/10 D				01
R0049	**RD356100**	Carbon Resistor (chip)	1.0K 63M J				01
R0050	**RD358100**	Carbon Resistor (chip)	100K 63M J				01
R0051	**RD358100**	Carbon Resistor (chip)	100K 63M J				01
R0052	**RD357470**	Carbon Resistor (chip)	47K 63M J				01
R0053	**RD355220**	Carbon Resistor (chip)	220 63M J				01
R0054	**RD358100**	Carbon Resistor (chip)	100K 63M J				01
R0055	**RD357100**	Carbon Resistor (chip)	10K 63M J				01
-0058	**RD357100**	Carbon Resistor (chip)	10K 63M J				01
R0059	**RD355100**	Carbon Resistor (chip)	100 63M J				01
R0060	**RD357100**	Carbon Resistor (chip)	10K 63M J				01
R0061	**RD356100**	Carbon Resistor (chip)	1.0K 63M J				01
R0062	**RD357100**	Carbon Resistor (chip)	10K 63M J				01
R0063	**RD357100**	Carbon Resistor (chip)	10K 63M J				01
R0065	**RD357470**	Carbon Resistor (chip)	47K 63M J				01
R0066	**RD357470**	Carbon Resistor (chip)	47K 63M J				01
R0068	**RD356680**	Carbon Resistor (chip)	6.8K 63M J				01
R0069	**RD354470**	Carbon Resistor (chip)	47 63M J				01
R0070	**RD357100**	Carbon Resistor (chip)	10K 63M J				01
R0071	**RD356680**	Carbon Resistor (chip)	6.8K 63M J				01
R0073	**RD356680**	Carbon Resistor (chip)	6.8K 63M J				01
R0074	**RD356680**	Carbon Resistor (chip)	6.8K 63M J				01
R0075	**RD358100**	Carbon Resistor (chip)	100K 63M J				01
R0076	**RD358100**	Carbon Resistor (chip)	100K 63M J				01
R0077	**RD356100**	Carbon Resistor (chip)	1.0K 63M J				01
R0078	**RD356100**	Carbon Resistor (chip)	1.0K 63M J				01
R0079	**RD155470**	Carbon Resistor (chip)	470.0 1/4 J				
R0080	**RD357100**	Carbon Resistor (chip)	10K 63M J				01
R0081	**RD256150**	Carbon Resistor (chip)	1.5K 0.1 J				01
R0083	**RD357100**	Carbon Resistor (chip)	10K 63M J				01
R0084	**RD357220**	Carbon Resistor (chip)	22K 63M J				01
R0085	**RD357220**	Carbon Resistor (chip)	22K 63M J				01
R0086	**RD358100**	Carbon Resistor (chip)	100K 63M J				01
R0087	**RD358100**	Carbon Resistor (chip)	100K 63M J				01
R0090	**RD359100**	Carbon Resistor (chip)	1.0M 63M J				01
R0091	**RD357100**	Carbon Resistor (chip)	10K 63M J				01
R0092	**RD357100**	Carbon Resistor (chip)	10K 63M J				01
R0093	**RD350000**	Carbon Resistor (chip)	0 63M J				01
R0099	**RD354680**	Carbon Resistor (chip)	68 63M J				01
R0100	**RD354680**	Carbon Resistor (chip)	68 63M J				01
R0101	**RD356270**	Carbon Resistor (chip)	2.7K 63M J				01
R0102	**RD356100**	Carbon Resistor (chip)	1.0K 63M J				01
R0103	**RD358100**	Carbon Resistor (chip)	100K 63M J				01
R0104	**RD357220**	Carbon Resistor (chip)	22K 63M J				01
R0109	**RD357220**	Carbon Resistor (chip)	22K 63M J				01
R0113	**RD357220**	Carbon Resistor (chip)	22K 63M J				01
R0114	**RD357100**	Carbon Resistor (chip)	10K 63M J				01
-0119	**RD357100**	Carbon Resistor (chip)	10K 63M J				01
R0125	**RD356100**	Carbon Resistor (chip)	1.0K 63M J				01
R0128	**RD254100**	Carbon Resistor (chip)	10.0 0.1 J				01
R0129	**RD155120**	Carbon Resistor (chip)	120.0 1/4 J				01
-0132	**RD155120**	Carbon Resistor (chip)	120.0 1/4 J				01
R0133	**RD357100**	Carbon Resistor (chip)	10K 63M J				01
-0135	**RD357100**	Carbon Resistor (chip)	10K 63M J				01
R0136	**RD354680**	Carbon Resistor (chip)	68 63M J				01
R0137	**RD354680**	Carbon Resistor (chip)	68 63M J				01
R0138	**RD357100**	Carbon Resistor (chip)	10K 63M J				01
-0140	**RD357100**	Carbon Resistor (chip)	10K 63M J				01

∗: New parts

RANK: Japan only

	REF NO.	PART NO.	DESCRIPTION			REMARKS	QTY	RANK
	R0141	**RD355220**	Carbon Resistor (chip)	220 63M J				01
	R0142	**RD355220**	Carbon Resistor (chip)	220 63M J				01
	R0145	**RD354680**	Carbon Resistor (chip)	68 63M J				01
	SW001	**VP691000**	Push Switch	SDDLB1		STANBY/ON		03
	TH001	**VV111400**	Poly Switch	SMD075-2 SMD				03
	TR001	**VD303700**	Transistor	2SC3326 A,B TE85R				01
	TR002	**VD303700**	Transistor	2SC3326 A,B TE85R				01
	TR003	**VJ927200**	Transistor	2SA1162 O,Y				01
	TR004	**VD303700**	Transistor	2SC3326 A,B TE85R				01
	X0001	**VZ703600**	Quartz Crystal Unit	8.4672M SMD-49				03
	X0002	**VY681200**	Ceramic Resonator	8M CSTCC8.00MG				01
	ZD001	**VU171500**	Zener Diode	UDZ 3.6BTE-17 3.6V				01
		VZ705300	Circuit Board	GH-D_SW H		(XT241A0)		13
		VB390500	Connector Base Post	PH- 9P TE				03
		VB390800	Connector Base Post	PH-12P TE				01
		VB941200	Diode	1SS133,1SS176				01
		--	Dust Proof Cloth			(VU45980)		
		V7411800	Circuit Board	HE-D_SW L		(XT240A0)		10
		XR632A00	IC	YMZ702-D		KSN2		09
		VB390400	Connector Base Post	PH- 8P TE				01
		VB390500	Connector Base Post	PH- 9P TE				03
		VB390800	Connector Base Post	PH-12P TE				01
		VB941200	Diode	1SS133,1SS176				01
		--	Dust Proof Cloth			(VU45960)		
	C1	**FG644100**	Electrolytic Cap.-F	0.0100 50V Z				01
	-3	**FG644100**	Electrolytic Cap.-F	0.0100 50V Z				01
	C5	**VF760000**	Electrolytic Cap.-KS	100.00 10.0V				01
	CL1	**VI653000**	Ceramic Resonator	CST4.00MGW040				01
	J1	**VD041700**	Jumper Wire	0.55				
	J2	**VD041700**	Jumper Wire	0.55				
	R1	**HF759100**	Carbon Resistor	1.0M 1/4 J				01
	R2	**HF755100**	Carbon Resistor	100.0 1/4 J				01
	R3	**HF755100**	Carbon Resistor	100.0 1/4 J				01
	R4	**HF756100**	Carbon Resistor	1.0K 1/4 J				01
	RA1	**VU483500**	Resistor Array	RGLD12X103J				01
		V6760100	Circuit Board	LC		(XZ147B0)		08
	C0001	**US145100**	Ceramic Capacitor-F (chip)	0.1000 25V Z				01
	C0002	**US145100**	Ceramic Capacitor-F (chip)	0.1000 25V Z				01
	CN001	**VF283300**	Connector Base Post	PH-15P TE				01
	IC001	**XN859A00**	IC	LC7985ND		LCD CONTROLLER		06
	R0001	**RD356220**	Carbon Resistor (chip)	2.2K 63M J				01
	R0002	**RD357910**	Carbon Resistor (chip)	91K 63M J				01
	R0003	**RD356220**	Carbon Resistor (chip)	2.2K 63M J				01
	-0006	**RD356220**	Carbon Resistor (chip)	2.2K 63M J				01
	R0007	**RD355200**	Carbon Resistor (chip)	200 63M J				01
	R0008	**RD354680**	Carbon Resistor (chip)	68 63M J				01
	TH001	**VR346900**	Thermistor	ERTD2FGJ801S 800				03
*		**V8626000**	Circuit Board	SW		(X2189C0)		
*		**V8626100**	Circuit Board	VOL		(X2189C0)		
*		**V8893800**	Circuit Board	KB		(X2189C0)		
	J	**VA078900**	Jumper Wire	0.55				
	10	**--**	Angle, RE			(V859770)		
	C0001	**FG644100**	Electrolytic Cap.	0.0100 50V Z				01
	C0002	**UI537100**	Electrolytic Cap.	10.00 16.0V				01
	C0003	**FG644100**	Electrolytic Cap.	0.0100 50V Z				01
	-0006	**FG644100**	Electrolytic Cap.	0.0100 50V Z				01
	CN001	**VE352600**	Connector Base Post	PH-14P TE				01
	CN002	**VK024800**	Wire Trap	52147 4P TE				01
	CN003	**VB858500**	Connector Base Post	PH- 6P SE				01
	CN004	**VK026500**	Wire Trap	52151 6P SE				01
	CN005	**VB390400**	Connector Base Post	PH- 8P TE				01
	D0001	**VB941200**	Diode	1SS133,1SS176				01
	-0005	**VB941200**	Diode	1SS133,1SS176				01
	EC001	**V6341400**	Rotary Encoder	XRE0121PVB15FINB1		Data Dial		01
	IC002	**IR027350**	IC	SN74HC273N		D-FF		05
	IC003	**IR024550**	IC	SN74HC245N		TRANSCEIVER		06
	IC004	**IR027350**	IC	SN74HC273N		D-FF		05
	IC005	**IR003250**	IC	SN74HC32N		OR		03
	LD001	**V6309000**	LED Yellow	SEL6710K TP5		VOICE		01
	LD002	**VU067800**	LED Red	SEL6210S-TP5		EDIT		01
	LD003	**V6309000**	LED Yellow	SEL6710K TP5		MULTI, SEQ PLAY, PRESET		01

*: New parts

RANK: Japan only

	REF NO.	PART NO.	DESCRIPTION			REMARKS	QTY	RANK
	-007	**V6309000**	LED Yellow	SEL6710K TP5		USER, GM2/XG		01
	LD008	**VU067800**	LED Red	SEL6210S-TP5		CATEGORY SEARCH		01
	RA001	**VE445200**	Resistor Array	RGLD8X103J				01
	R0001	**HF456470**	Carbon Resistor	4.7K 1/4 J				01
	-0008	**HF456470**	Carbon Resistor	4.7K 1/4 J				01
	R0009	**HF455390**	Carbon Resistor	390.0 1/4 J				01
	-0016	**HF455390**	Carbon Resistor	390.0 1/4 J				01
	SW001	**VV439800**	Tact Switch	SKQNAJ		VOICE		01
	SW002	**VZ085500**	Tact Switch	SKQNAM004A		UTILITY		01
	SW003	**VV439800**	Tact Switch	SKQNAJ		EDIT		01
	SW004	**VV439800**	Tact Switch	SKQNAJ		MULTI		01
	SW005	**VZ085500**	Tact Switch	SKQNAM004A		CONTROLLER		01
	SW006	**VZ085500**	Tact Switch	SKQNAM004A		JOB		01
	SW007	**VV439800**	Tact Switch	SKQNAJ		SEQ PLAY		01
	SW008	**VZ085500**	Tact Switch	SKQNAM004A		CARD, STORE, (+), (-), DEC/NO		01
	-018	**VZ085500**	Tact Switch	SKQNAM004A		◄, ▲, ▼, MUTE, INC/YES, ►		01
	SW019	**VV439800**	Tact Switch	SKQNAJ		CATEGORY SEARCH, PRESET,		01
	-022	**VV439800**	Tact Switch	SKQNAJ		USER, GM2/XG		01
	SW023	**VZ085500**	Tact Switch	SKQNAM004A		7, 4, 1, 0, 8, 5, 2, (-), 9, 6, 3,		01
	-035	**VZ085500**	Tact Switch	SKQNAM004A		ENTER, EXIT		01
	VR001	**VL445700**	Slide Variable Resistor	A10K EWA-NNDCH1A14		VOLUME		03
*		**V8395300**	Circuit Board	US		(X2190B0)		
		--	Angle, US	1		(V859940)		
	C0001	**UF037100**	Electrolytic Cap. (chip)	10 16V				01
	C0002	**US061220**	Ceramic Capacitor-CH(chip)	22P 50V J				01
	C0003	**US061220**	Ceramic Capacitor-CH(chip)	22P 50V J				01
	C0004	**US064100**	Ceramic Capacitor-B (chip)	0.0100 50V K				01
	C0005	**US062680**	Ceramic Capacitor-SL(chip)	680P 50V J				01
	C0006	**US135100**	Ceramic Capacitor-F (chip)	0.1000 16V Z				01
	C0007	**UF037100**	Electrolytic Cap. (chip)	10 16V				01
	C0008	**US064100**	Ceramic Capacitor-B (chip)	0.0100 50V K				01
	C0009	**US035100**	Ceramic Capacitor-B (chip)	0.1000 16V K				01
	C0010	**UF066220**	Electrolytic Cap. (chip)	2.2 50V				01
	C0011	**UF037100**	Electrolytic Cap. (chip)	10 16V				01
	C0012	**US064100**	Ceramic Capacitor-B (chip)	0.0100 50V K				01
	-0017	**US064100**	Ceramic Capacitor-B (chip)	0.0100 50V K				01
	C0018	**US061470**	Ceramic Capacitor-CH(chip)	47P 50V J				01
	C0019	**US064100**	Ceramic Capacitor-B (chip)	0.0100 50V K				01
	C0020	**UF037100**	Electrolytic Cap. (chip)	10 16V				01
	C0021	**US064100**	Ceramic Capacitor-B (chip)	0.0100 50V K				01
	C0022	**UF037100**	Electrolytic Cap. (chip)	10 16V				01
	C0023	**US064100**	Ceramic Capacitor-B (chip)	0.0100 50V K				01
	CN001	**V6802600**	Jack	USB 4P SE		USB		02
	CN002	**V3962800**	Connector Assembly	CN015R-3013-0				05
	CN005	**VQ048500**	Connector Assembly	FFC 52045 36P TE				02
	EM001	**V6196600**	EMI Filter (chip)	NFM4516P13C204FT1				01
*	IC001	**X2886100**	IC	M37640M8-152 FP		CPU(USB 32K)		
	IC002	**XR337A00**	IC	TC74VHC32F-TEL		} OR		01
	IC002	**XY306A00**	IC	74VHC32SJX		} OR		01
	IC003	**XR337A00**	IC	TC74VHC32F-TEL		} OR		01
	IC003	**XY306A00**	IC	74VHC32SJX		} OR		01
	IC004	**XM332A00**	IC	TC74VHC04F		INVERTER		01
	IC005	**XV242A00**	IC	TC74VHCT245AF		TRANSCEIVE		03
	IC006	**IS024400**	IC	HD74LV244AFPEL		} BUFFER		02
	IC006	**XT800A00**	IC	TC74VHC244F		} BUFFER		03
	IC007	**IS027300**	IC	HD74LV273AFPEL		} D-FF		02
	IC007	**XN971A00**	IC	TC74VHC273F		} D-FF		03
	IC008	**XZ372A00**	IC	TC74VHCT32AFT-EL		OR		01
	L0001	**V5239100**	Common Mode Coil	PLP3216S121SL2T1				03
	RA001	**RE047220**	Resistor Array	22KX4				01
	RA002	**RE047220**	Resistor Array	22KX4				01
	RA003	**RE044680**	Resistor Array	68X4				01
	RA004	**RE044680**	Resistor Array	68X4				01
	RA005	**RE048100**	Resistor Array	100KX4				01
	RA006	**RE048100**	Resistor Array	100KX4				01
	RA007	**RE044680**	Resistor Array	68X4				01
	RA008	**RE044680**	Resistor Array	68X4				01
	RA009	**RE047220**	Resistor Array	22KX4				01
	-0013	**RE047220**	Resistor Array	22KX4				01
	R0002	**RD356470**	Carbon Resistor (chip)	4.7K 63M J				01
	R0004	**RD357220**	Carbon Resistor (chip)	22K 63M J				01
	R0005	**RD357220**	Carbon Resistor (chip)	22K 63M J				01
	R0006	**RD355680**	Carbon Resistor (chip)	680 63M J				01
	R0007	**RD356100**	Carbon Resistor (chip)	1.0K 63M J				01

*: New parts

RANK: Japan only

REF NO.	PART NO.	DESCRIPTION			REMARKS	QTY	RANK
R0008	**RD356100**	Carbon Resistor (chip)	1.0K 63M J				01
R0009	**RD355150**	Carbon Resistor (chip)	150 63M J				01
R0010	**RD357100**	Carbon Resistor (chip)	10K 63M J				01
R0011	**RD154330**	Carbon Resistor (chip)	33.0 1/4 J				01
R0012	**RD357220**	Carbon Resistor (chip)	22K 63M J				01
R0013	**RD154330**	Carbon Resistor (chip)	33.0 1/4 J				01
R0014	**RD155470**	Carbon Resistor (chip)	470.0 1/4 J				
R0015	**RD358100**	Carbon Resistor (chip)	100K 63M J				01
R0016	**RD356150**	Carbon Resistor (chip)	1.5K 63M J				01
R0017	**RD357100**	Carbon Resistor (chip)	10K 63M J				01
-0019	**RD357100**	Carbon Resistor (chip)	10K 63M J				01
R0020	**RD355100**	Carbon Resistor (chip)	100 63M J				01
-0022	**RD355100**	Carbon Resistor (chip)	100 63M J				01
R0023	**RD358470**	Carbon Resistor (chip)	470K 63M J				01
-0025	**RD358470**	Carbon Resistor (chip)	470K 63M J				01
R0026	**RD357100**	Carbon Resistor (chip)	10K 63M J				01
-0028	**RD357100**	Carbon Resistor (chip)	10K 63M J				01
R0029	**RD355100**	Carbon Resistor (chip)	100 63M J				01
R0030	**RD357100**	Carbon Resistor (chip)	10K 63M J				01
-0032	**RD357100**	Carbon Resistor (chip)	10K 63M J				01
TR001	**VJ927200**	Transistor	2SA1162 O,Y				01
X0001	**VP864900**	Quartz Crystal Unit	16M SMD-49				04
⚠	**VN103500**	Lithium Battery	CR2032				
	V8624300	LCD	TSB0794-DGTDCN-C1				
	V5264900	Back Light Assembly	A PT				07
	VQ764300	Rotary Variable Resistor	RK1631110T54A 10K		PITCH BEND		03
	VN245400	Rotary Variable Resistor	10.0K K161100S		MODULATION		03

∗: New parts

RANK: Japan only

S08 OVERALL CIRCUIT DIAGRAM 1/4 (US)

US

from DM-CN7

CONNECT

DM CN7	US CN5
1	36
2	35
35	2
36	1

52045-3645

CN5

CPU IC1 M37640 or CONSIDERABLE PARTS.

TRANSCEIVER

BUFFER

D-FF

INVERTER

OR

CN2 CN015R-3013-0 TOP VIEW

CN1 USB

28CC1-8821929

Note: See parts list for details of circuit board component parts. Parts inside of [ ] are not installed.

S08 OVERALL CIRCUIT DIAGRAM 2/4 (SW)

SW

from DM-CN6

from DM-CN2

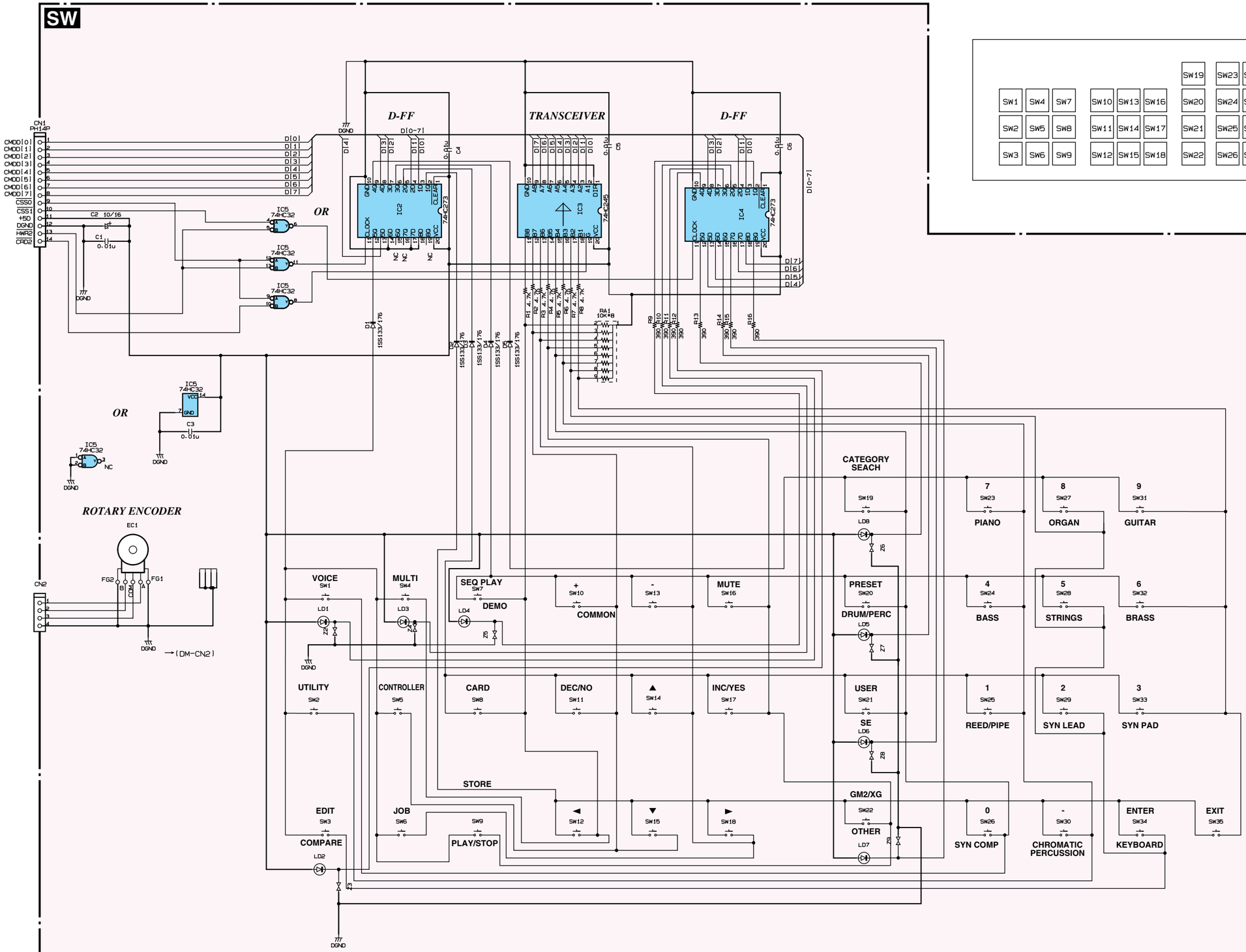

28CC1-8821928

Note: See parts list for details of circuit board component parts.

■ S08 OVERALL CIRCUIT DIAGRAM 3/4 (DM, VOL, KB)

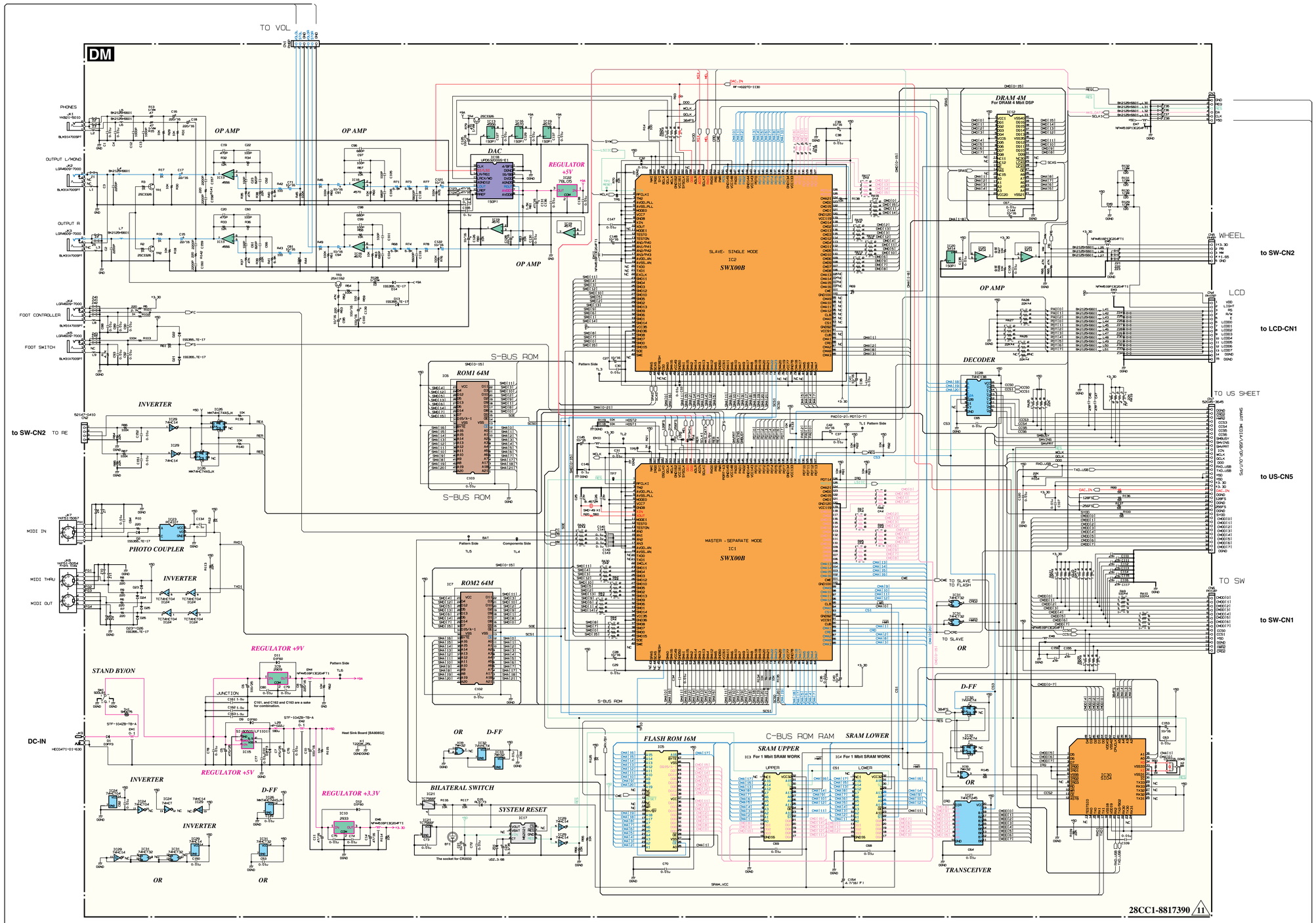

•UPC2909T (XT441A00) REGULATOR +9V DM: IC009	•μPC2933T (XS516A00) REGULATOR +3.3V DM: IC010	•SI-8050S (XT442A00) REGULATOR +5V DM: IC015	•NJMJ78L05UA (XJ598A00) REGULATOR +5V DM: IC022
1: V in 2: GND 3: V out	1: V in 2: GND 3: V out	1 : V in 2 : SW out 3 : GND 4 : V os 5 : S.S	1: OUTPUT 2: COMMON 3: INPUT

(⌀): Tantalum Capacitor
金 被: Metal Film Resister

Note: See parts list for details of circuit board component parts.

■ S08 OVERALL CIRCUIT DIAGRAM 4/4 (GH-D_SW H, HE-D_SW L, LC)

GH-D_SW H

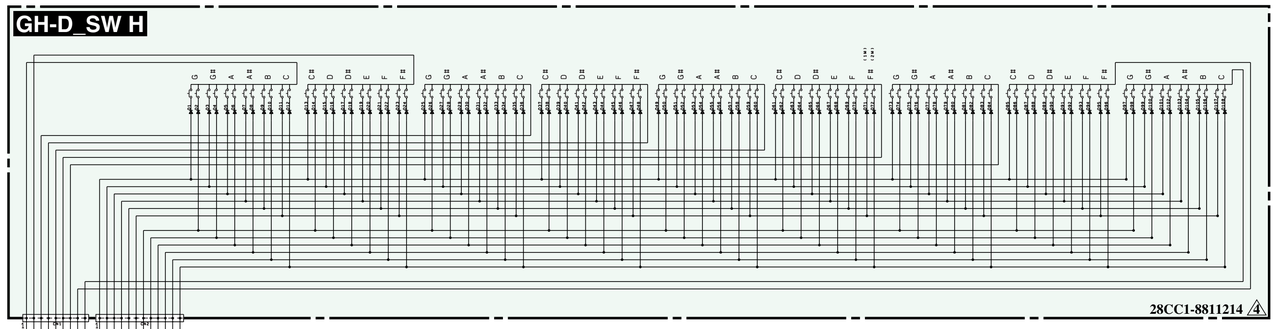

HE-D_SW L

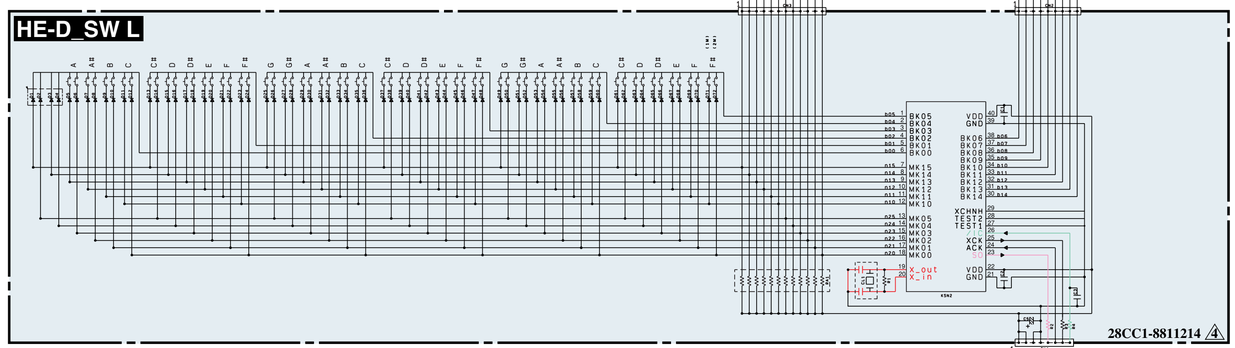

to KB-CN5

LC

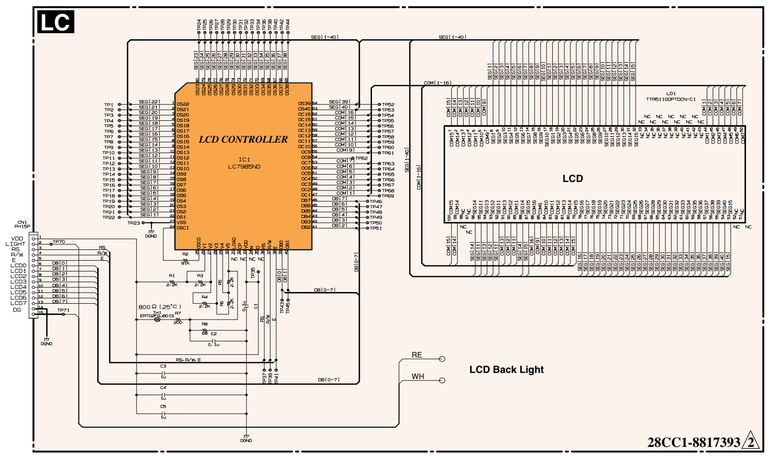

to DM-CN4

Note: See parts list for details of circuit board component parts.