PORTATONE

PSR-VN300

SERVICE MANUAL



PSR-VN300

■ CONTENTS

SPECIFICATIONS 3
PANEL LAYOUT 4
CIRCUIT BOARD LAYOUT & WIRING 5
BLOCK DIAGRAM 6
DISASSEMBLY PROCEDURES 7
LSI PIN DESCRIPTION 13
IC BLOCK DIAGRAM 15
CIRCUIT BOARDS 16
TEST PROGRAM 20
BACKUP & INITIALIZATION 22
TRANSFERRING DATA BETWEEN THE PSR-VN300 and a COMPUTER 23
MIDI IMPLEMENTATION CHART 26
MIDI DATA FORMAT 27
PARTS LIST
OVERALL CIRCUIT DIAGRAM

PK 001781

YAMAHA

HAMAMATSU, JAPAN

Copyright (c) Yamaha Corporation. All rights reserved. KM UP VIDEO 07.04

Downloaded from www.Manualslib.com manuals search engine

IMPORTANT NOTICE

This manual has been provided for the use of authorized Yamaha Retailers and their service personnel. It has been assumed that basic service procedures inherent to the industry, and more specifically Yamaha Products, are already known and understood by the users, and have therefore not been restated.

WARNING: Failure to follow appropriate service and safety procedures when servicing this product may result in personal injury, destruction of expensive components and failure of the product to perform as specified. For these reasons, we advise all Yamaha product owners that all service required should be performed by an authorized Yamaha Retailer or the appointed service representative.

IMPORTANT: This presentation or sale of this manual to any individual or firm does not constitute authorization, certification, recognition of any applicable technical capabilities, or establish a principal-agent relationship of any form.

The data provided is believed to be accurate and applicable to the unit(s) indicated on the cover. The research engineering, and service departments of Yamaha are continually striving to improve Yamaha products. Modifications are, therefore, inevitable and changes in specification are subject to change without notice or obligation to retrofit. Should any discrepancy appear to exist, please contact the distributor's Service Division.

WARNING: Static discharges can destroy expensive components. Discharge any static electricity your body may have accumulated by grounding yourself to the ground bus in the unit (heavy gauge black wires connect to this bus).

IMPORTANT: Turn the unit OFF during disassembly and parts replacement. Recheck all work before you apply power to the unit.

WARNING: CHEMICAL CONTENT NOTICE!

The solder used in the production of this product contains LEAD. In addition, other electrical/electronic and/or plastic (Where applicable) components may also contain traces of chemicals found by the California Health and Welfare Agency (and possibly other entities) to cause cancer and/or birth defects or other reproductive harm.

DO NOT PLACE SOLDER, ELECTRICAL/ELECTRONIC OR PLASTIC COMPONENTS IN YOUR MOUTH FOR ANY REASON WHAT SO EVER!

Avoid prolonged, unprotected contact between solder and your skin! When soldering, do not inhale solder fumes or expose eyes to solder/flux vapor!

If you come in contact with solder or components located inside the enclosure of this product, wash your hands before handling food.

■ WARNING

Components having special characteristics are marked ⚠ and must be replaced with parts having specification equal to those originally installed.

■ SAVING DATA

Saving and backing up your data

- Some data items (page 26) are automatically saved as backup data in the internal memory even if you turn the power off. Saved data may be lost due to malfunction or incorrect operation. Save important data to external device such as a computer.

Downloaded from www.Manualslib.com manuals search engine

SPECIFICATIONS

Keyboards
- 61 standard-size keys (C1–C6), with Touch Response

Display
- LCD display (backlit)

Setup
- STANDBY/ON
- MASTER VOLUME: MIN–MAX

Panel Controls
- [L]/[REC TRACK 2], [R]/[REC TRACK 1], [LISTEN & LEARN], [TIMING], [WAITING], [A-B REPEAT]/[ACMP ON/OFF], [REW]/[INTRO/ENDING/rit.], [FF]/[[MAIN/AUTO FILL], [TEMPO/TAP], [REC], [PAUSE]/[SYNC START], [START/STOP], [SONG], [STYLE], [VOICE], [FUNCTION], [PORTABLE GRAND], [MUSIC DATABASE], [REVERB ON/OFF], [DEMO], [METRONOME ON/OFF], [SPLIT ON/OFF], [DUAL ON/OFF], [HARMONY ON/OFF], [TOUCH ON/OFF], number buttons [0]–[9], [+/ YES], [-/ NO]

Voice
- 108 panel voices + 12 drum kits + 1 sound effect kit + 359 XGlite voices + 2 XGlite optional voices
- Polyphony: 32
- DUAL
- SPLIT

Style
- 106 preset Styles + flash memory
- Style Control: ACMP ON/OFF, SYNC START, START/STOP, INTRO/ENDING/rit., MAIN/AUTO FILL
- Fingering: Multi fingering
- Style Volume
- Style Register

Education Feature
- Chord Dictionary
- Lesson 1–3

Function
- Style Volume, Song Volume, Transpose, Tuning, Split Point, Touch Sensitivity, Style Register, Main voice (Volume, Octave, Chorus Send Level), Dual voice (Voice, Volume, Octave, Chorus Send Level), Split voice (Voice, Volume, Octave, Chorus Send Level), Reverb Type, Reverb level, Chorus Type, Panel Sustain, Harmony Type, Harmony Volume, PC mode (PC1/PC2/Off), Local On/Off, External Clock, Initial Setup Send, Time Signature (Numerator, Denominator), Metronome Volume, Lesson Track (R), Lesson Track (L), Demo Cancel

Effects
- Reverb: 9 types
- Chorus: 4 types
- Harmony: 26 types

Song
- 110 Preset Songs + 5 User Songs + Flash Memory
- Song Clear
- Song Volume

Music Database
- 100

Recording
- Song
  User Song: 5 Songs
  Recording Tracks: 1, 2

MIDI
- Local On/Off
- Initial Setup Send
- External Clock
- PC mode

Auxiliary jacks
- PHONES/OUTPUT, DC IN 12V, MIDI IN/OUT, SUSTAIN

Amplifier
- 2.5W + 2.5W

Speakers
- 12cm x 2

Power Consumption
- 10W (When using PA-3C power adaptor)

Power Supply
- Adaptor: Yamaha PA-3C or an equivalent
- Batteries: Six “AA” size, LR6 or equivalent batteries

Dimensions (W x D x H)
- 945 x 370 x 128 mm (37-1/4" x 14-5/8" x 5-1/16")

Weight
- 4.9kg (10 lbs. 13 oz.) (not including batteries)

Supplied Accessories
- Music Rest
- Owner’s Manual

Optional Accessories
- AC Power Adaptor: Yamaha PA-3C or an equivalent
- USB-MIDI Interface: UX16
- Footswitch: FC4/FC5
- Keyboard Stand: L-2C/L-2L
- Headphones: HPE-150/HPE-30

Downloaded from www.Manualslib.com manuals search engine

■ PANEL LAYOUT

- **Front panel**

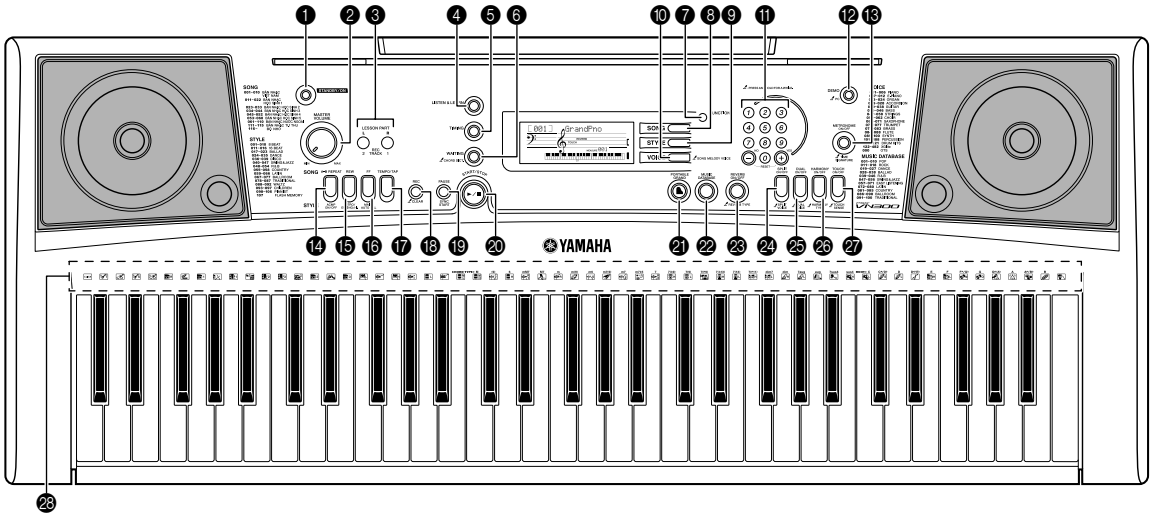

❶ [STANDBY/ON] switch
❷ [MASTER VOLUME] control
❸ LESSON PART
[L] button
[R] button
[REC TRACK 2] button
[REC TRACK 1] button
❹ [LISTEN & LEARN] button
❺ [TIMING] button
❻ [WAITING] button
❼ [FUNCTION] button
❽ [SONG] button
❾ [STYLE] button
❿ [VOICE] button
⓫ Number buttons [0] – [9], [+/YES], [-/NO]
⓬ [DEMO] button
⓭ [METRONOME ON/OFF] button
⓮ [A-B REPEAT] button
[ACMP ON/OFF] button
⓯ [REW] button
[INTRO/ENDING/rit] button
⓰ [FF] button
[MAIN/AUTO FILL] button
⓱ [TEMPO/TAP] button
⓲ [REC] button
⓳ [PAUSE] button
[SYNC START] button
⓴ [START/STOP] button
㉑ [PORTABLE GRAND] button
㉒ [MUSIC DATABASE] button
㉓ [REVERB ON/OFF] button
㉔ [SPLIT ON/OFF] button
㉕ [DUAL ON/OFF] button
㉖ [HARMONY ON/OFF] button
㉗ [TOUCH ON/OFF] button
㉘ Drum Kit

- **Rear panel**

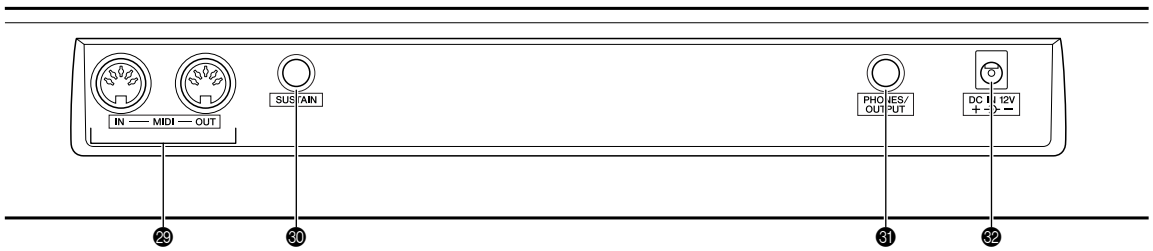

㉙ MIDI IN/OUT terminals
㉚ SUSTAIN jack
㉛ PHONES/OUTPUT jack
㉜ DC IN 12V jack

Downloaded from www.Manualslib.com manuals search engine

■ CIRCUIT BOARD LAYOUT & WIRING

- **Upper case side**

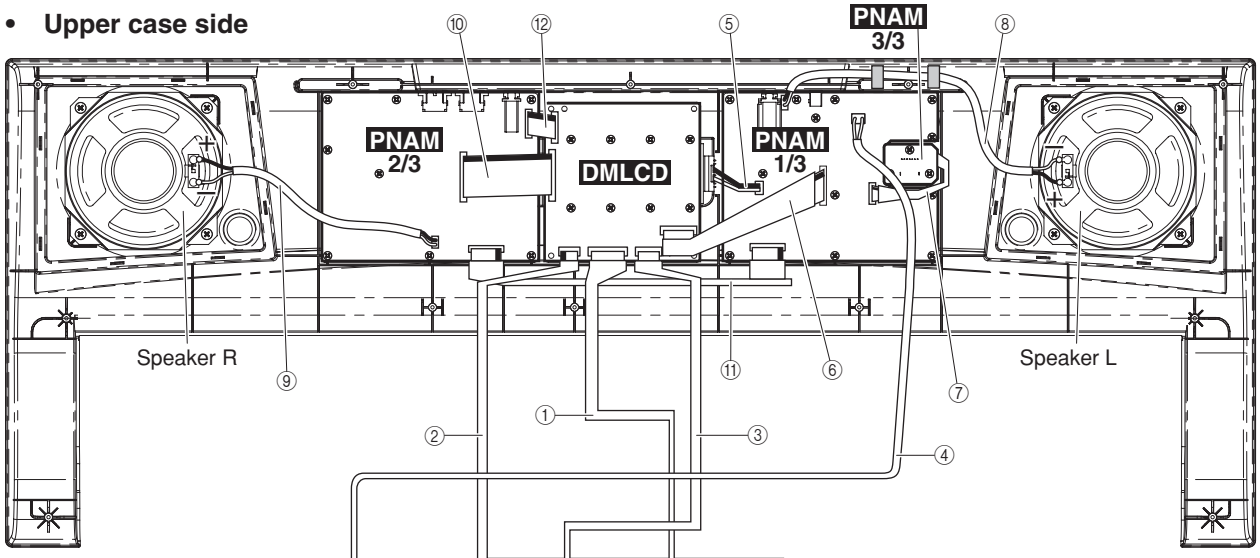

- **Lower case side**

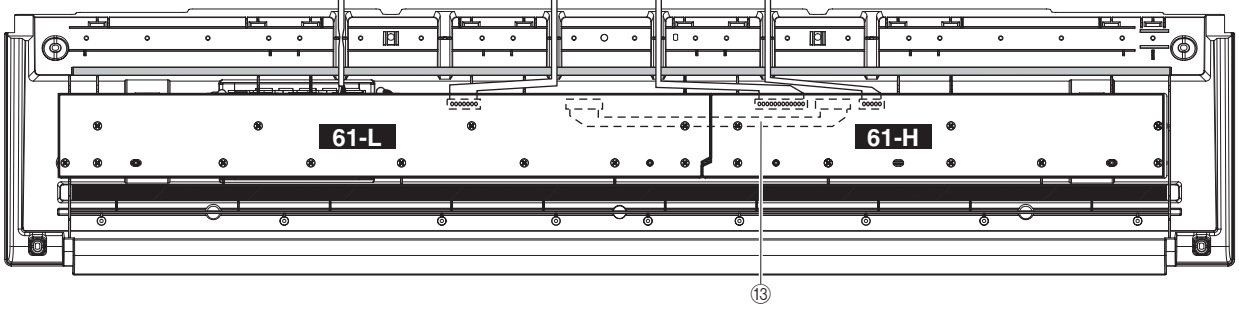

No.	Location	Parts No.	Connector Assembly	Destination						Remarks
①	30	WE138500	MK1	61H-CN1	*1	*4	DMLCD-CN831	*1	*4	12P
②	40	WE138700	MK2	61H-CN2	*1	*4	DMLCD-CN832	*1	*4	5P
③	50	WE138800	MK3	61L-CN5	*1	*4	DMLCD-CN833	*1	*4	7P
④	120	(WE15140)	BATT	Battery terminal A	*2	*7	PNAM1/3-CN101	*1	*6	3P
				Battery terminal B	*2	*7				
⑤	230	(WE14140)	BL	Back light assembly ±	*2	*5	PNAM1/3-CN102	*1	*4	2P
⑥	WA103	(WE13910)	AM	PNAM1/3-CN103	*3	*4	DMLCD-CN131	*1	*4	11P L=170
⑦	WA401	(WE13900)	VOL	PNAM1/3-CN401	*3	*4	PNAM3/3-CN402	*3	*4	5P L=120
⑧	WA403	(WE14120)	SPL	PNAM1/3-CN403	*3	*5	Speaker-L ±	*2	*5	2P L=280
⑨	WA404	(WE14130)	SPR	PNAM2/3-CN404	*3	*5	Speaker-R ±	*2	*5	2P L=220
⑩	WA501	(WE14080)	PN1	PNAM2/3-CN501	*3	*4	DMLCD-CN531	*1	*4	16P L=100
⑪	WA502	(WE13970)	PN2	PNAM1/3-CN503	*3	*4	PNAM2/3-CN502	*3	*4	10P L=340
⑫	WA601	(WE14060)	JACK	PNAM2/3-CN601	*3	*4	DMLCD-CN631	*1	*4	9P L=70
⑬	150c	V8696200		61H-CN3	*1	*4	61L-CN4	*1	*4	12P L=210

*The parts with "( )" in "**Part No.**" are not available as spare parts.
*1: Installation
*2: Manual soldering
*3: Dip soldering
*4: Edge mark is adjusted to Pin 1 mark (△ mark).
*5: Edge mark is adjusted to + mark (+ mark).
*6: Red wire is adjusted to Pin 1 mark (△ mark).
*7: Battery terminal A (Black wire), Battery terminal B (Red wire).

Caution: Be sure to attach the removed filament tape just as it was before removal.

Downloaded from www.Manualslib.com manuals search engine

■ BLOCK DIAGRAM

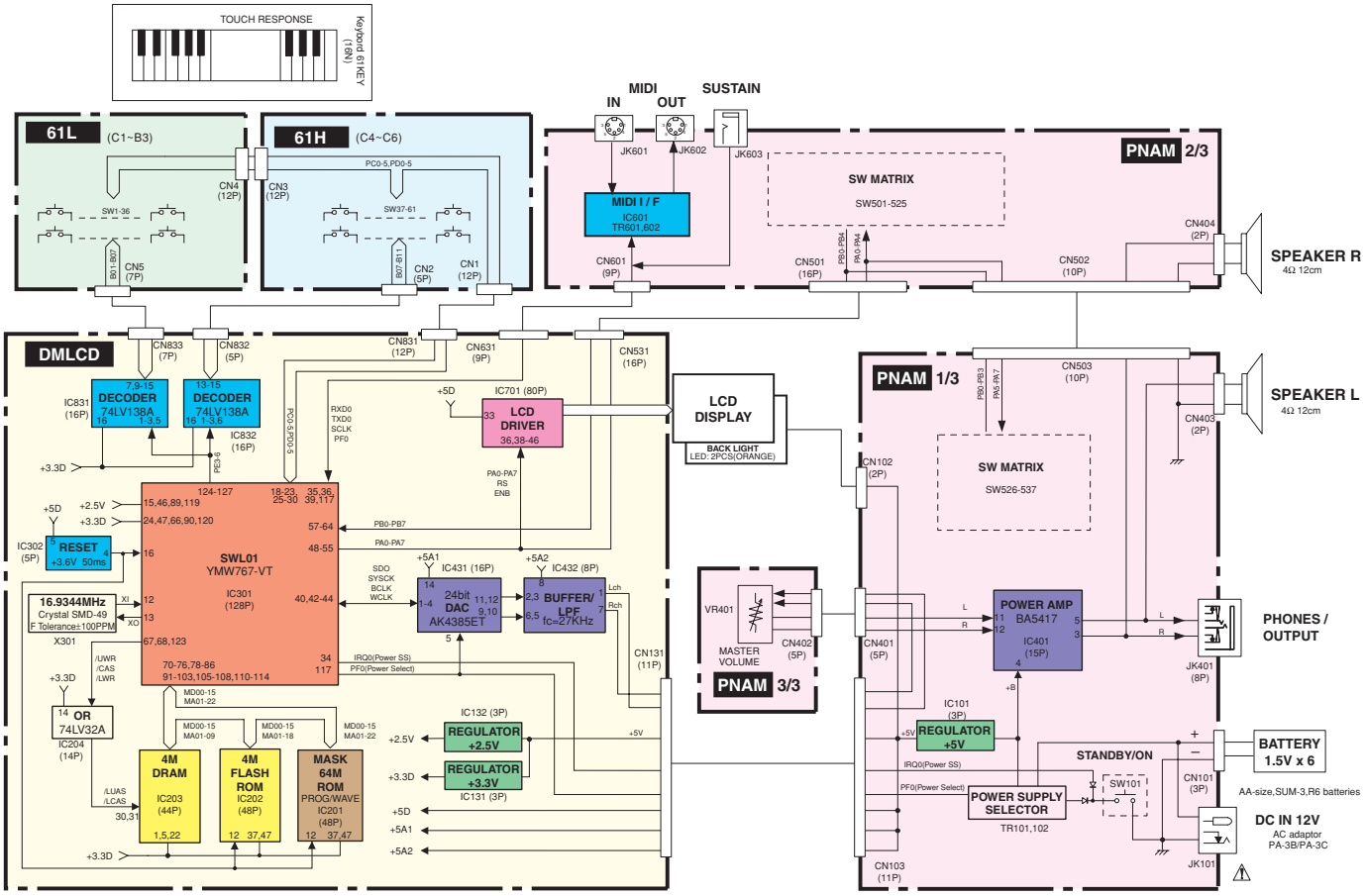

28CA1-8834545

Downloaded from www.Manualslib.com manuals search engine

■ DISASSEMBLY PROCEDURES

Caution: Be sure to attach the removed filament tape just as it was before removal.

1. Lower Case Assembly (Time required: About 1 minute)

1-1 Remove the five (5) screws marked [240A], two (2) screws marked [270A], and two (2) screws marked [320]. The lower case assembly can then be removed. (Fig. 1)

- **Bottom view**

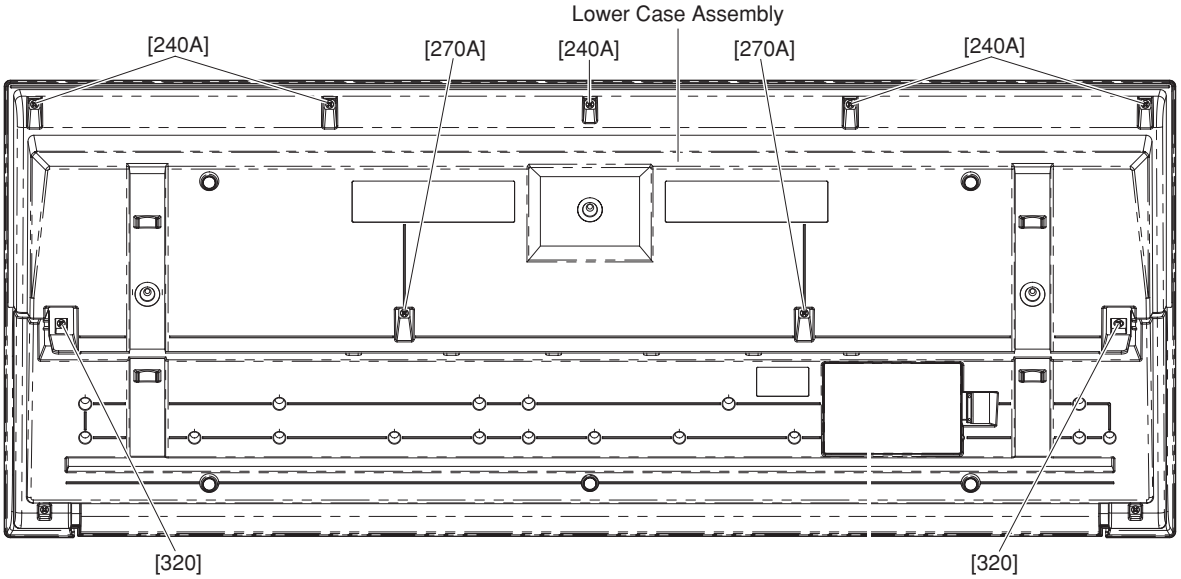

- **Top view**

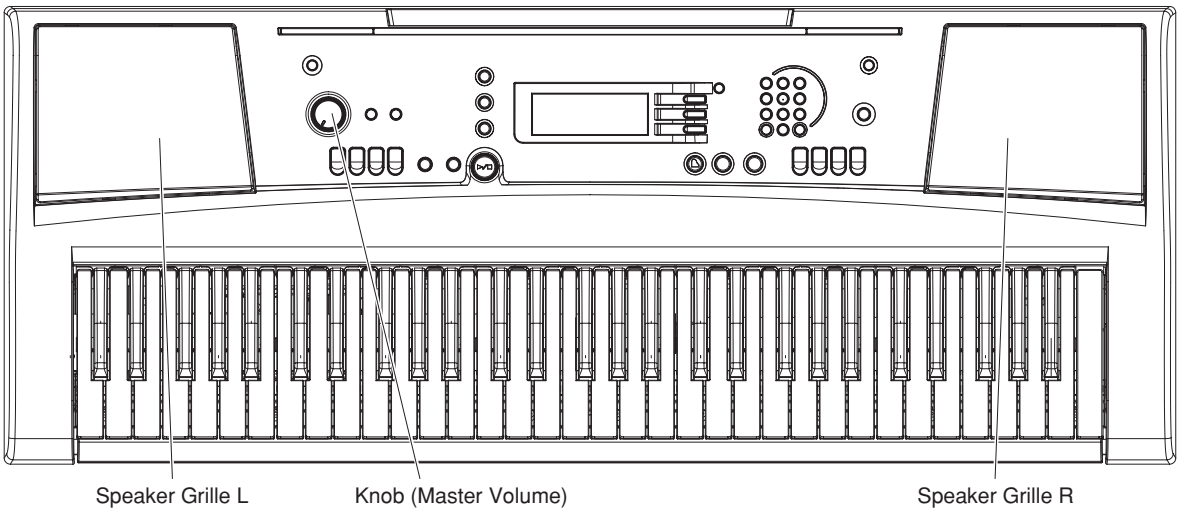

[240A] : Bind Head Tapping Screw-B 3x12 MFZN2W3 (WE987400)
[270A] : Bind Head Screw 3x30 MFZN2W3 (WF491000)
[320] : Bind Head Screw 3x20 MFZN2W3 (WF489300)

Fig. 1

Downloaded from www.Manualslib.com manuals search engine

2. DMLCD circuit board (Time required: About 3 minutes)

2-1 Remove the lower case assembly. (See procedure 1)

2-2 Remove the eight (8) screws marked [240B]. The DMLCD circuit board can then be removed. (Fig. 2)

* When installing the DMLCD circuit board, tighten the screws 1 through 8 in numerical order. (Fig. 2)

* If the DMLCD circuit board is replaced, execute the “Factory Set” in the test program.

- **Bottom view**

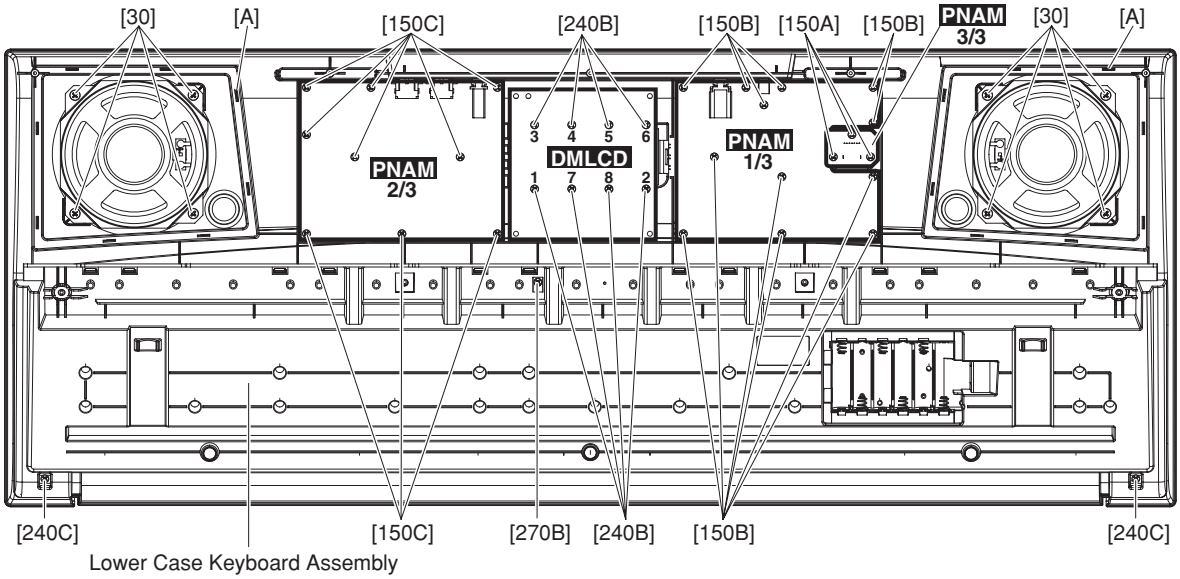

[30] : Bind Head Tapping Screw-B 4x8 MFZN2W3 (WE974600)
[150A] : Bind Head Tapping Screw-B 3x8 MFZN2W3 (WE774300)
[150B] : Bind Head Tapping Screw-B 3x8 MFZN2W3 (WE774300)
[150C] : Bind Head Tapping Screw-B 3x8 MFZN2W3 (WE774300)
[240B] : Bind Head Tapping Screw-B 3x12 MFZN2W3 (WE987400)
[240C] : Bind Head Tapping Screw-B 3x12 MFZN2W3 (WE987400)
[270B] : Bind Head Screw 3x30 MFZN2W3 (WF491000)

Fig. 2

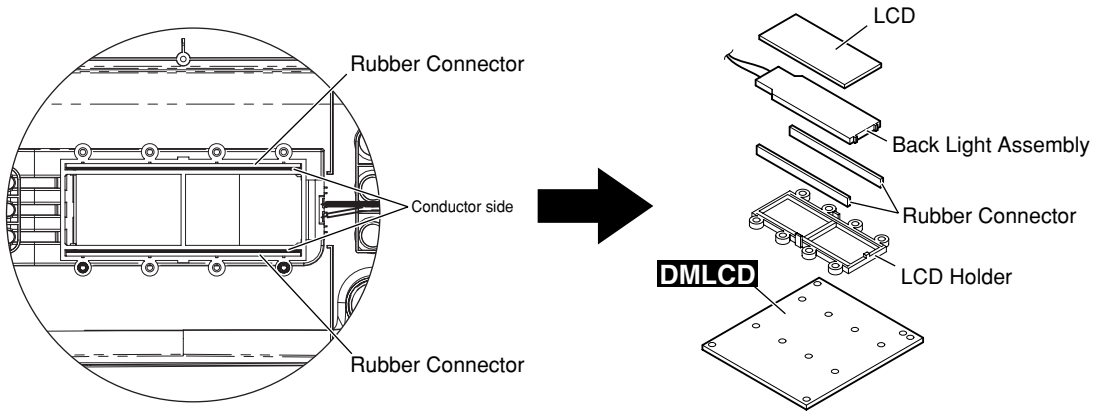

Fig. 3

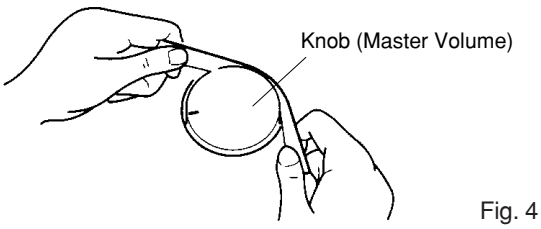

Fig. 4

Downloaded from www.Manualslib.com manuals search engine

3. LCD (Time required: About 3 minutes)

3-1 Remove the lower case assembly. (See procedure 1)

3-2 Remove the DMLCD circuit board. (See procedure 2)

3-3 Remove the LCD holder and rubber connector. (Fig. 3)

3-4 Remove the back light assembly. (Fig. 3)

3-5 Remove the LCD. (Fig. 3)

* When attaching the rubber connector, set the conductive part to face inside. (Fig. 3)

4. PNAM Circuit Board (1/3, 2/3, 3/3)

4-1 Remove the lower case assembly. (See procedure 1)

4-2 PNAM Circuit Board 3/3
(Time required: About 2 minutes)

4-2-1 Remove the volume knob from the control panel surface. (Fig. 1, 4)

4-2-2 Remove the three (3) screws marked [150A]. The PNAM circuit board 3/3 can then be removed. (Fig. 2)

4-3 PNAM Circuit Board 1/3
(Time required: About 3 minutes)

4-3-1 Remove the PNAM circuit board 3/3. (See procedure 4-2)

4-3-2 Remove the twelve (12) screws marked [150B]. The PNAM circuit board 1/3 can then be removed. (Fig. 2)

4-4 PNAM circuit board (2/3)
(Time required: About 3 minutes)

4-4-1 Remove the nine (9) screws marked [150C]. The PNAM circuit board 2/3 can then be removed. (Fig. 2)

5. Speaker (Time required: About 3 minutes)

5-1 Remove the lower case assembly. (See procedure 1)

5-2 Remove the four (4) screws marked [30]. The speaker can then be removed. (Fig. 2)

* The right and left speakers can be removed in the same manner.

6. SP Grille (Time required: About 3 minutes)

6-1 Remove the lower case assembly. (See procedure 1)

6-2 Align the four (4) [A]s the groove in the upper case assembly and remove the SP grille. (Fig. 2)

* The right and left SP grilles can be removed in the same manner.

7. Lower Case Keyboard Assembly (Time required: About 2 minutes)

7-1 Remove the lower case assembly. (See procedure 1)

7-2 Remove the two (2) screws marked [240C] and screw marked [270B].
The lower case keyboard assembly can then be removed. (Fig. 2)

Downloaded from www.Manualslib.com manuals search engine

8. Keyboard Assembly

8-1 Remove the lower case keyboard assembly. (See procedure 7)

8-2 White and black keys for one octave unit are integrated as a set. There are five sets in total.
Remove the four (4) screws marked [200A]. The keyboard can then be removed. (Fig. 5)
There are two (2) hooks at the back of the black keys. (Photo. 1)
Press the hook for the black key and lift slightly, and pull forward to remove the hook for the black key to lift it.

8-3 To remove the white key C6, remove the screw marked [200B], press the hook at the back to lift slightly, and pull forward to remove the hook to lift it. (Fig. 5)

9. Rubber Contact

9-1 Remove the lower case keyboard assembly. (See procedure 7)

9-2 Remove the keyboard corresponding to the rubber contacts to be removed. (See procedure 8)

9-3 Remove the rubber contacts. (Photo. 2)

<Lower case keyboard assembly>

- **Top view**

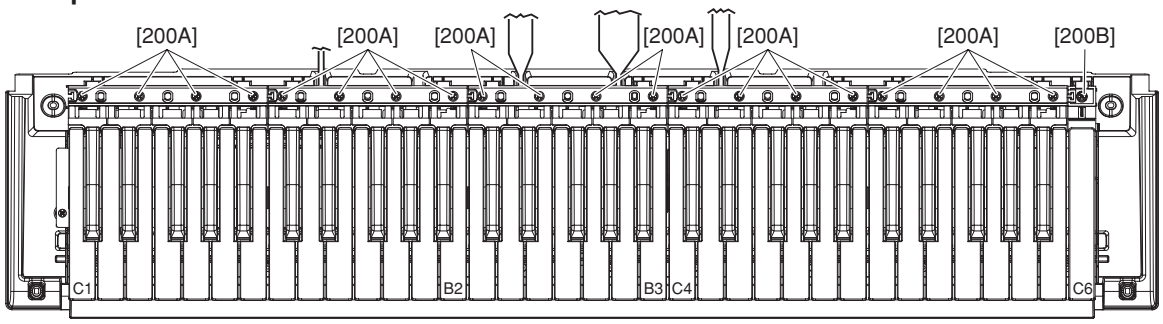

[200A] : Bind Head Tapping Screw-P 3x20 MFZN2W3 (WF492000)
[200B] : Bind Head Tapping Screw-P 3x20 MFZN2W3 (WF492000)

Fig. 5

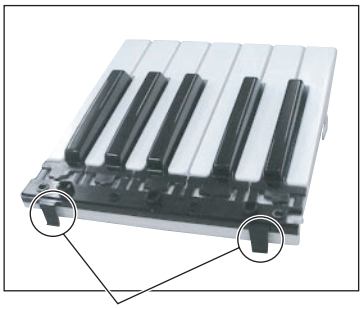

Photo. 1

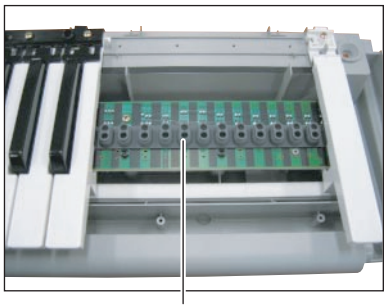

Photo. 2

Downloaded from www.Manualslib.com manuals search engine

10. Circuit Board 61L, Circuit Board 61H

10-1 Remove the lower case keyboard assembly. (See procedure 7)

10-2 Circuit Board 61L (Time required: About 6 minutes)

10-2-1 Remove the keyboards from C1 to B3. (See procedure 8)

10-2-2 Remove the four (4) screws marked [180A], and eight (8) screws marked [190A].
The circuit board 61L can then be removed. (Fig. 6-1)

* When installing the circuit board 61L, tighten the screws 1 through 12 in numerical order. (Fig. 6-2)

10-3 Circuit Board 61H (Time required: About 5 minutes)

10-3-1 Remove the keyboards from C4 to C6. (See procedure 8)

10-3-2 Remove the three (3) screws marked [180B], and five (5) screws marked [190B].
The circuit board 61H can then be removed. (Fig. 6-1)

* When installing the circuit board 61H, tighten the screws 1 through 8 in numerical order. (Fig. 6-2)

- **Top view**

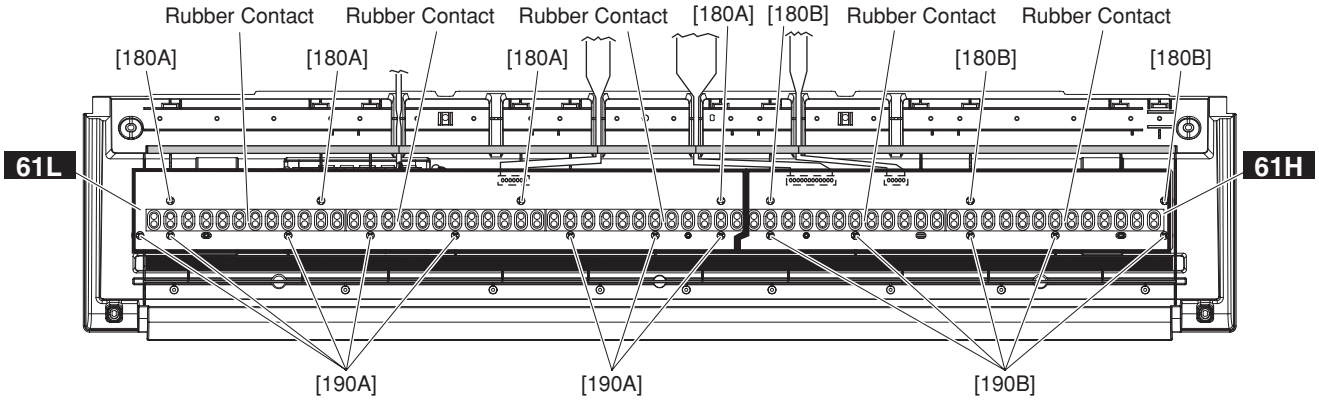

[180A] : Bind Head Tapping Screw-B 3x8 MFZN2W3 (WE774300)
[180B] : Bind Head Tapping Screw-B 3x8 MFZN2W3 (WE774300)
[190A] : Bind Head Tapping Screw-P 3x12 MFZN2W3 SP (WH899400)
[190B] : Bind Head Tapping Screw-P 3x12 MFZN2W3 SP (WH899400)

Fig. 6-1

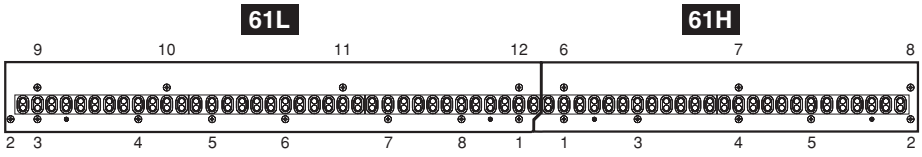

Fig. 6-2

Downloaded from www.Manualslib.com manuals search engine

11. How to Remove Spring Terminals

A Spring Terminal A, Spring Terminal B

11-1 Remove the lower case keyboard assembly. (See procedure 7)

11-2 Remove the keyboards from C1 to B2. (See procedure 8)

11-3 Remove the battery connector assembly soldered to the spring terminal A and spring terminal B. (Photo. 3)

11-4 Reverse the lower case keyboard assembly and remove the battery lid assembly. (Fig. 7)

11-5 Lift the spring terminal A slightly and slide it in the upper right direction to remove it. (Fig. 8)

11-6 Remove the hook for the spring terminal B to pull it out from inside. (Fig. 8)

B Spring Terminal C, Spring Terminal D

11-1 Remove the battery lid assembly at the bottom side of the lower case keyboard assembly.

11-2 Remove the hooks to pull out the spring terminal C and spring terminal D. (Fig. 8, Fig. 9)

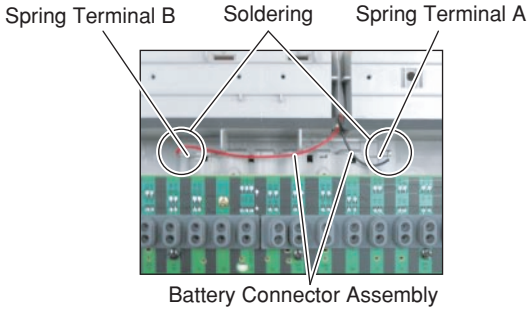

Photo. 3

- **Bottom view**

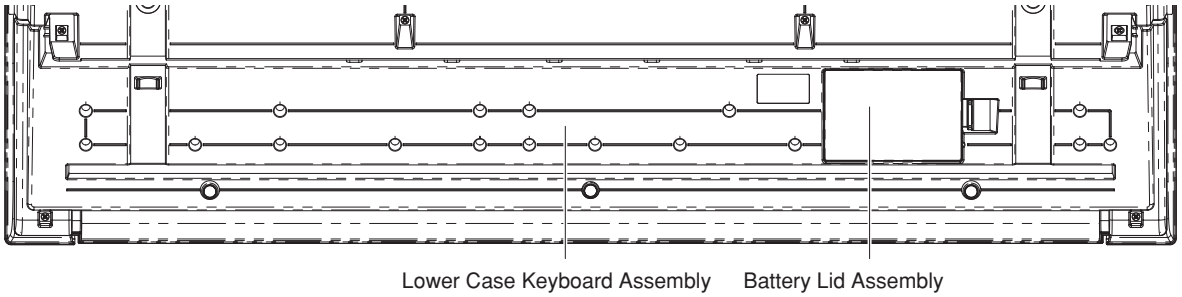

Fig. 7

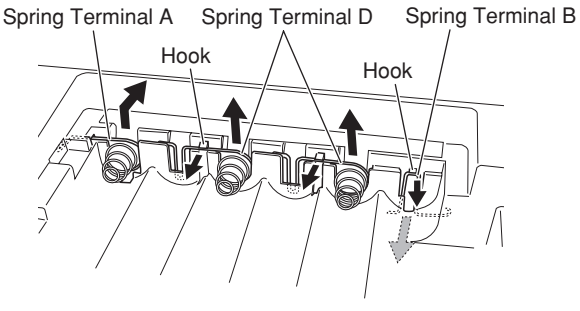

Fig. 8

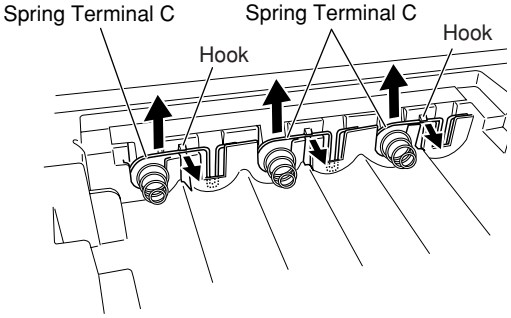

Fig. 9

Downloaded from www.Manualslib.com manuals search engine

■ LSI PIN DESCRIPTION

CONTENTS

- **ML9040A-B01GAZ03A** (XZ987A00) **LCD DRIVER** 14
- **NT3881DF-01** (X3148A00) **LCD DRIVER** 14
- **YMW767-VTZ** (X6055A00) **CPU** (Central Processing Unit) 13

• **YMW767-VTZ** (X6055A00) **CPU** (Central Processing Unit)

DMLCD: IC301

PIN NO.	NAME	I/O	FUNCTION	PIN NO.	NAME	I/O	FUNCTION
1	V_{SS}		Ground	65	V_{SS}		Ground
2	TESTN (SCMD)	I	TEST Pin	66	IOV_{DD}		Power supply
3	PLLBPN	I	PLL bypass	67	LBN/LWRN/PF6	O	Low byte enable
4	$PLLV_{DD}$		Power supply	68	UBN/UWRN/PF7	O	Upper byte enable
5	CIN		Condenser connect	69	RDN/PF4	O	Read enable
6	$PLLV_{SS}$		Ground	70	MD00	I/O	
7	TRSTN	I		71	MD08	I/O	
8	TMS	I		72	MD01	I/O	
9	TCK	I	JTAG	73	MD09	I/O	Memory data bus
10	TDI	I		74	MD02	I/O	
11	TDO	O		75	MD10	I/O	
12	XI	I	Crystal oscillator	76	MD03	I/O	
13	XO	O		77	V_{SS}		Ground
14	V_{SS}		Ground	78	MD11	I/O	
15	V_{DD}		Power supply	79	MD04	I/O	
16	ICN	I	Initial clear	80	MD12	I/O	
17	ECSN	I	Chip select	81	MD05	I/O	
18	EWRN/PD5	I	Write enable	82	MD13	I/O	Memory data bus
19	ERDN/PD4	I	Read enable	83	MD06	I/O	
20	EA3/PD3	I		84	MD14	I/O	
21	EA2/PD2	I	Address bus	85	MD07	I/O	
22	EA1/PD1	I		86	MD15	I/O	
23	EA0/PD0	I		87	WRN/PF5	O	
24	IOV_{DD}		Power supply	88	V_{SS}		Ground
25	ED0/PC0	I/O		89	V_{DD}		Power supply
26	ED1/PC1	I/O		90	IOV_{DD}		Power supply
27	ED2/PC2	I/O		91	MA17	O	
28	ED3/PC3	I/O		92	MA16	O	
29	ED4/PC4	I/O	Data bus /	93	MA15	O	
30	ED5/PC5	I/O		94	MA14	O	
31	ED6/PC6	I/O		95	MA13	O	
32	ED7/PC7	I/O		96	MA12	O	
33	V_{SS}		Ground	97	MA11	O	Memory address bus
34	IRQ0N/PH0	I	Interrupt request	98	MA10	O	
35	TxD0	O	Serial port 0	99	MA09	O	
36	RxD0	I		100	MA08	O	
37	TxD1/PG2	O	Serial port 1 /	101	MA07	O	
38	RxD1/PH1	I		102	MA06	O	
39	SCLK1/PH2	I	EXT Clock /	103	MA05	O	
40	SDO	O	Serial data	104	V_{SS}		Ground
41	SDI/PH3	I	Serial data /	105	MA04	O	
42	BCLK	O	Bit clock	106	MA03	O	Memory address bus
43	WCLK/SYO	O	Word clock	107	MA02	O	
44	SYSCLK/PG3	O	System clock	108	MA01	O	
45	V_{SS}		Ground	109	CS0N/PG0	O	Chip select /
46	V_{DD}		Power supply	110	MA18	O	Memory address bus
47	IOV_{DD}			111	MA19	O	
48	PA0	I/O		112	MA21/PF1	O	Memory address bus
49	PA1	I/O		113	MA22/PF2	O	
50	PA2	I/O		114	MA20	O	Memory address bus
51	PA3	I/O	Parallel port A	115	MA23/PF3	O	Memory address bus
52	PA4	I/O		116	CSIN/PG1	O	Chip select /
53	PA5	I/O		117	MA00/PF0	O	Memory address bus
54	PA6	I/O		118	V_{SS}		Ground
55	PA7	I/O		119	V_{DD}		Power supply
56	V_{SS}		Ground	120	IOV_{DD}		Power supply
57	PB0	I/O		121	CS2N/PE0	O	Chip select /
58	PB1	I/O		122	CS3N/PE1	O	Chip select /
59	PB2	I/O		123	CS4N/CASN/PE2	O	Chip select /
60	PB3	I/O	Parallel port B	124	CS5N/PE3	O	Chip select /
61	PB4	I/O		125	CS50RDN/PE4	O	Chip select /
62	PB5	I/O		126	CS51WRN/PE5	O	Chip select /
63	PB6	I/O		127	CS52WRN/PE6	O	Chip select /
64	PB7/SYI	I/O	Parallel port B /	128	CS53WRN/RASN/PE7	O	Chip select /

Downloaded from www.Manualslib.com manuals search engine

- **NT3881DF-01** (X3148A00) **LCD DRIVER**
- **ML9040A-B01GAZ03A** (XZ987A00) **LCD DRIVER**

DMLCD: IC701

PIN NO.	NAME	I/O	FUNCTION	PIN NO.	NAME	I/O	FUNCTION
1	S22	O		41	DB2	I/O	
2	S21	O		42	DB3	I/O	
3	S20	O		43	DB4	I/O	
4	S19	O		44	DB5	I/O	Data interface
5	S18	O		45	DB6	I/O	
6	S17	O		46	DB7	I/O	
7	S16	O		47	C1	O	
8	S15	O		48	C2	O	
9	S14	O		49	C3	O	
10	S13	O		50	C4	O	
11	S12	O	Segment signal output for LCD driving	51	C5	O	
12	S11	O		52	C6	O	
13	S10	O		53	C7	O	
14	S9	O		54	C8	O	Common signal output for LCD driving
15	S8	O		55	C9	O	
16	S7	O		56	C10	O	
17	S6	O		57	C11	O	
18	S5	O		58	C12	O	
19	S4	O		59	C13	O	
20	S3	O		60	C14	O	
21	S2	O		61	C15	O	
22	S1	O		62	C16	O	
23	Vss		Ground	63	S40	O	
24	OSC1	I	Oscillator	64	S39	O	
25	OSC2	O	Oscillator	65	S38	O	
26	V1			66	S37	O	
27	V2			67	S36	O	
28	V3		Power supply	68	S35	O	
29	V4			69	S34	O	
30	V5			70	S33	O	
31	CLK1	O	Data latch clock	71	S32	O	Segment signal output for LCD driving
32	CLK2	O	Data shift clock	72	S31	O	
33	Vdd		Power supply (+5 V)	73	S30	O	
34	M	O	Altamated signal for LCD driver outout	74	S29	O	
35	D	O	Display data interface	75	S28	O	
36	RS	I		76	S27	O	
37	R/W	I	Read/write	77	S26	O	
38	E	I	Enable	78	S25	O	
39	DB0	I/O	Data interface	79	S24	O	
40	DB1	I/O	Data interface	80	S23	O	

Downloaded from www.Manualslib.com manuals search engine

■ IC BLOCK DIAGRAM

- **HD74LV32AFPEL** (IS003200)
  Quad 2 Input OR
  DMLCD: IC204

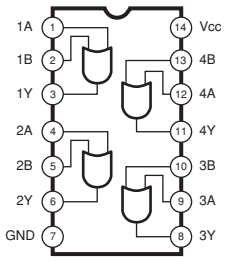

- **NJM4580E** (X2331A00)
  Dual Operational Amplifier
  DMLCD: IC432

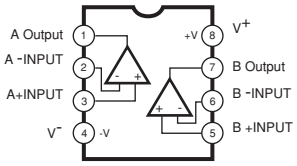

- **SN74LV138ANSR** (IS013810)
  DECODER
  DMLCD: IC831, 832

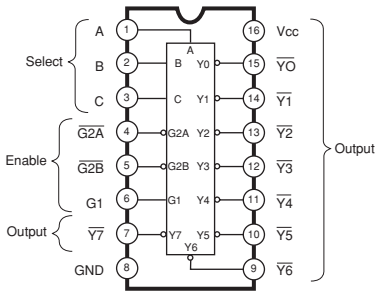

- **AK4385ET** (X6040A00)
  D/A Converter
  DMLCD: IC431

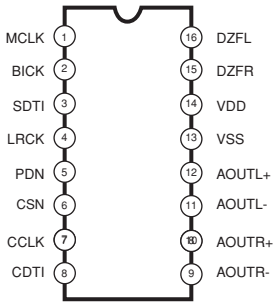

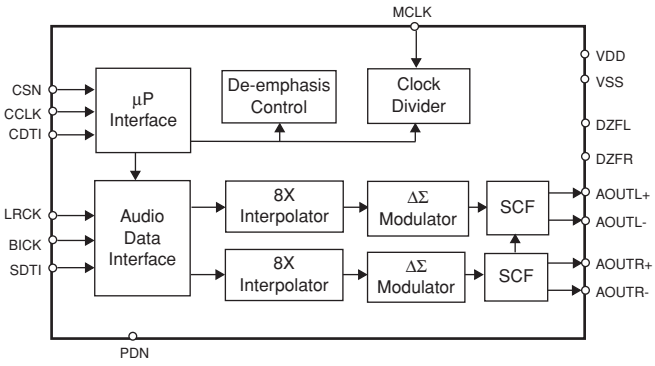

Downloaded from www.Manualslib.com manuals search engine

■ CIRCUIT BOARDS

CONTENTS

- DMLCD Circuit Board (X5910C0) 18
- PNAM 1/3 Circuit Board (X5911C0) 16
- PNAM 2/3 Circuit Board (X5911C0) 17
- PNAM 3/3 Circuit Board (X5911C0) 17
- 61H Circuit Board (X2335C0) 19
- 61L Circuit Board (X2336B0) 19

Note: See parts list for details of circuit board component parts.

• PNAM1/3 Circuit Board

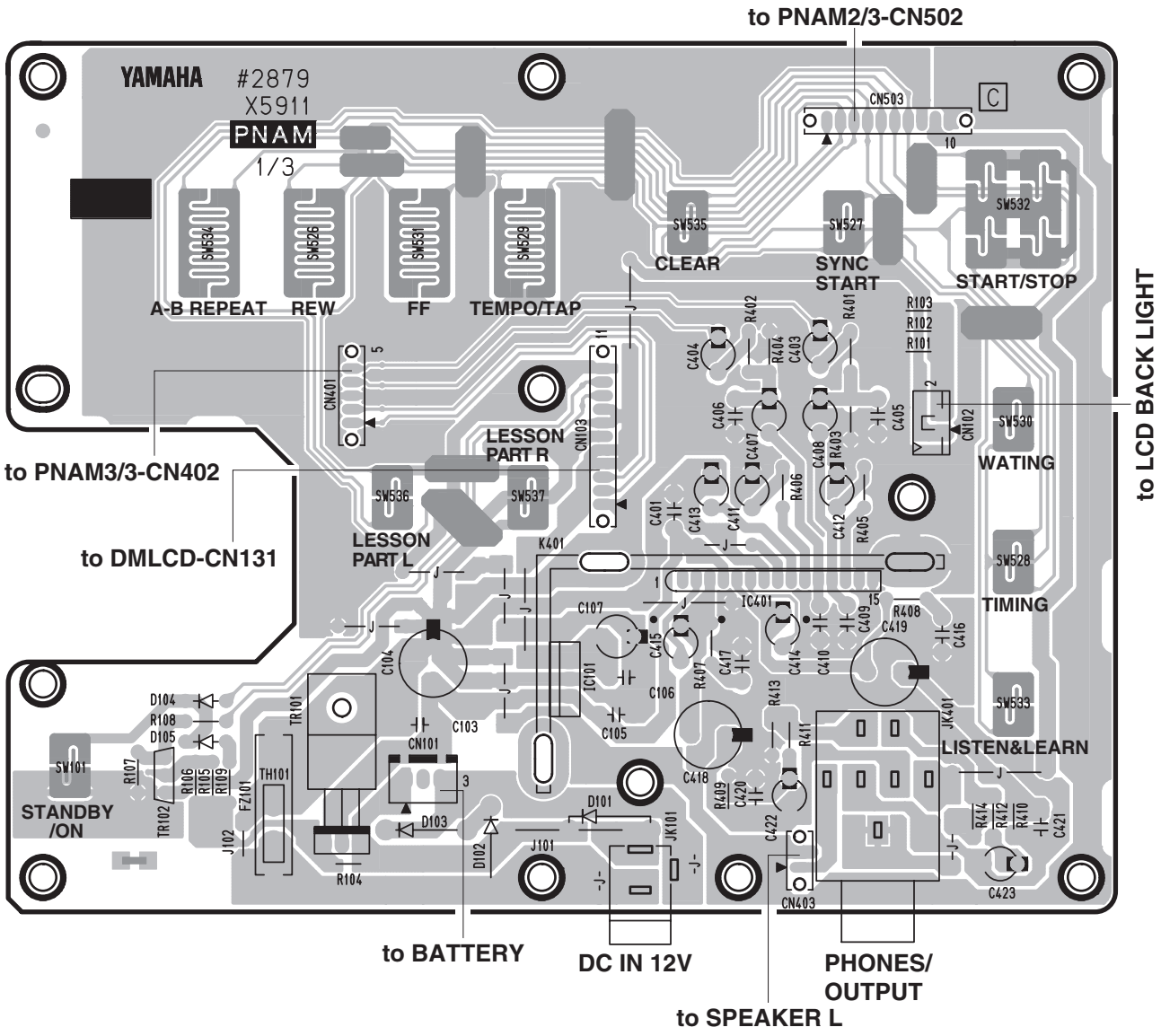

Component side

2NA-WE00540 ⚠1

Downloaded from www.Manualslib.com manuals search engine

- **PNAM3/3 Circuit Board**

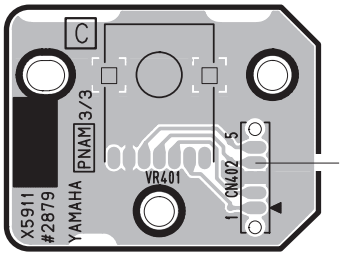

MASTER VOLUME

Component side

- **PNAM2/3 Circuit Board**

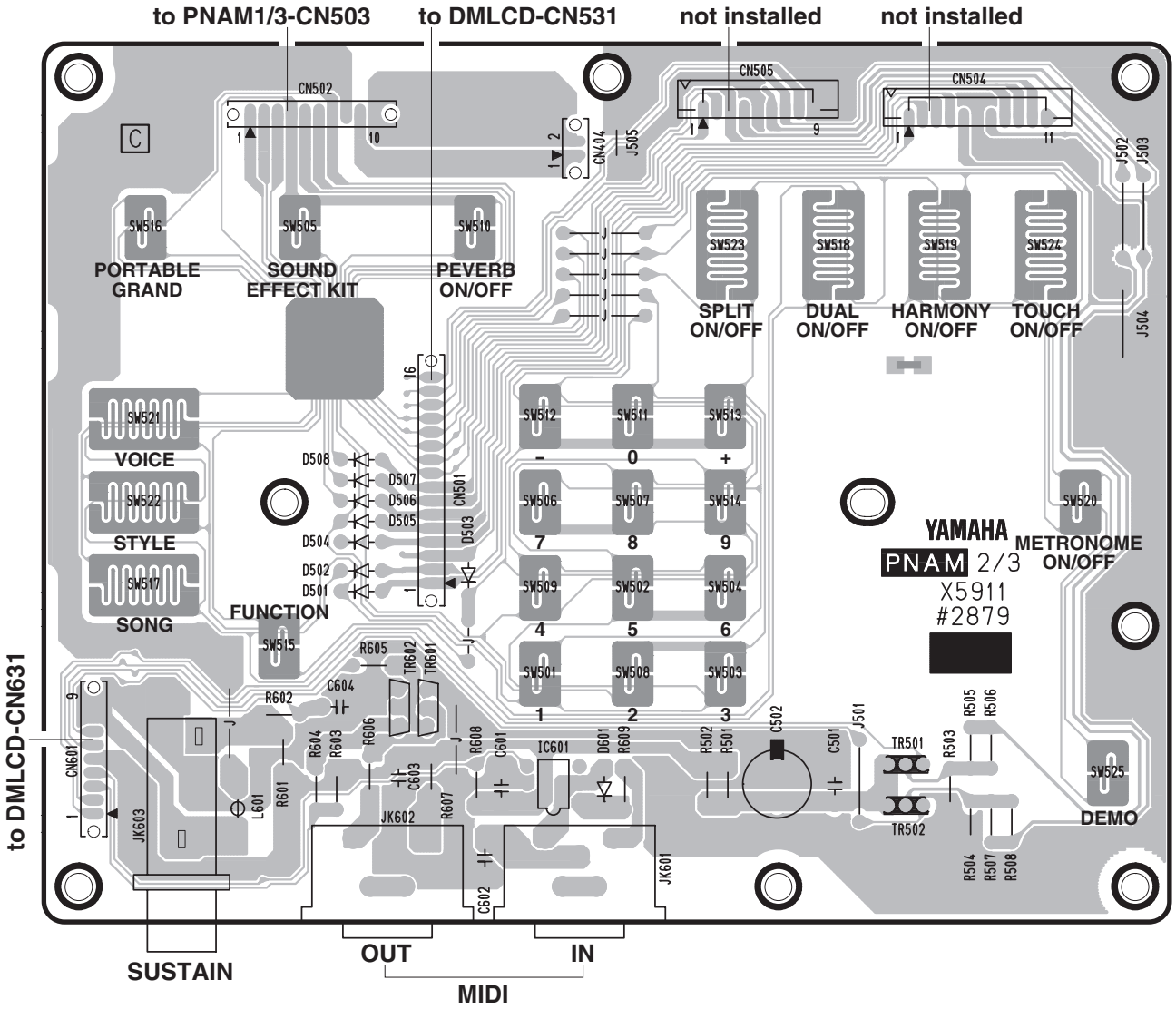

Component side

PNAM2/3: 2NA-WE00540 ⚠1
PNAM3/3: 2NA-WE00540 ⚠1

Downloaded from www.Manualslib.com manuals search engine

• DMLCD Circuit Board

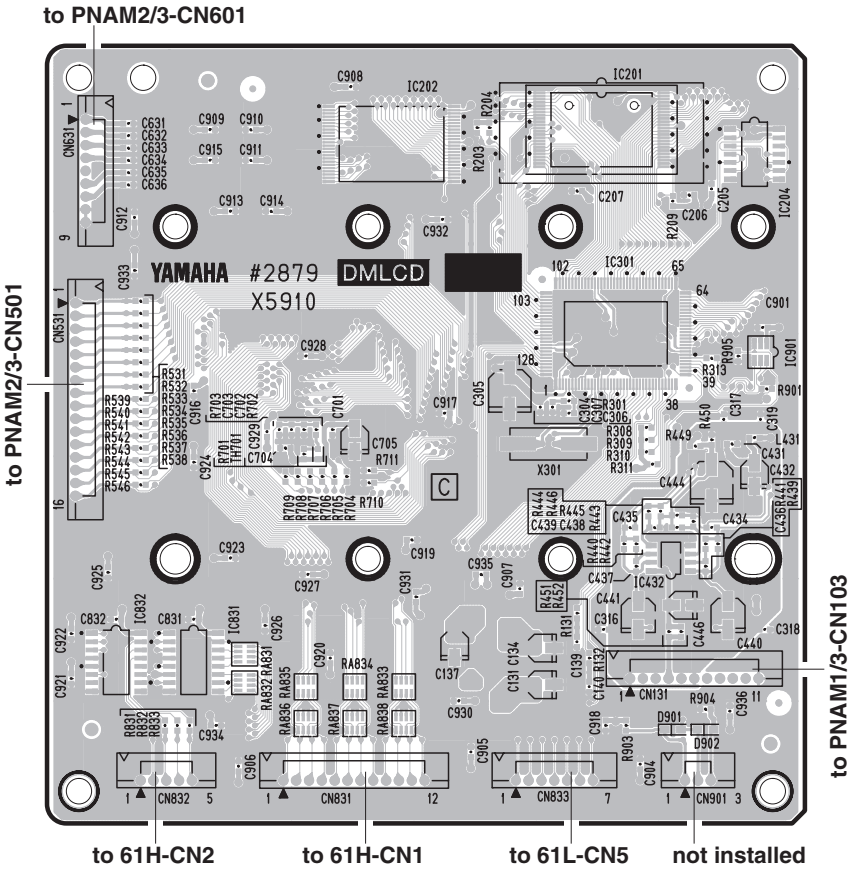

Component side

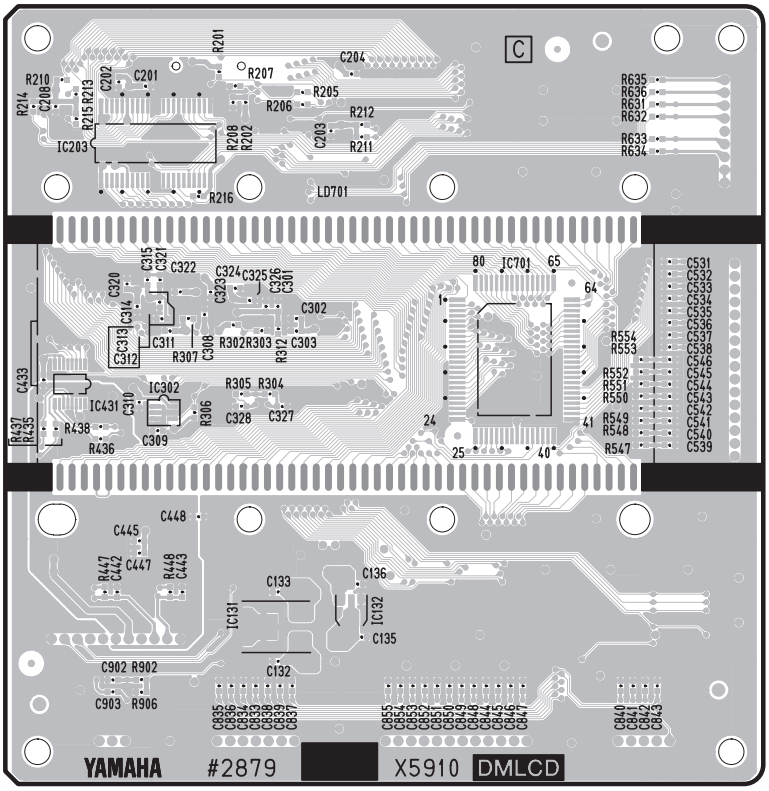

Pattern side

2NA-WE00520 1

Downloaded from www.Manualslib.com manuals search engine

• 61H Circuit Board

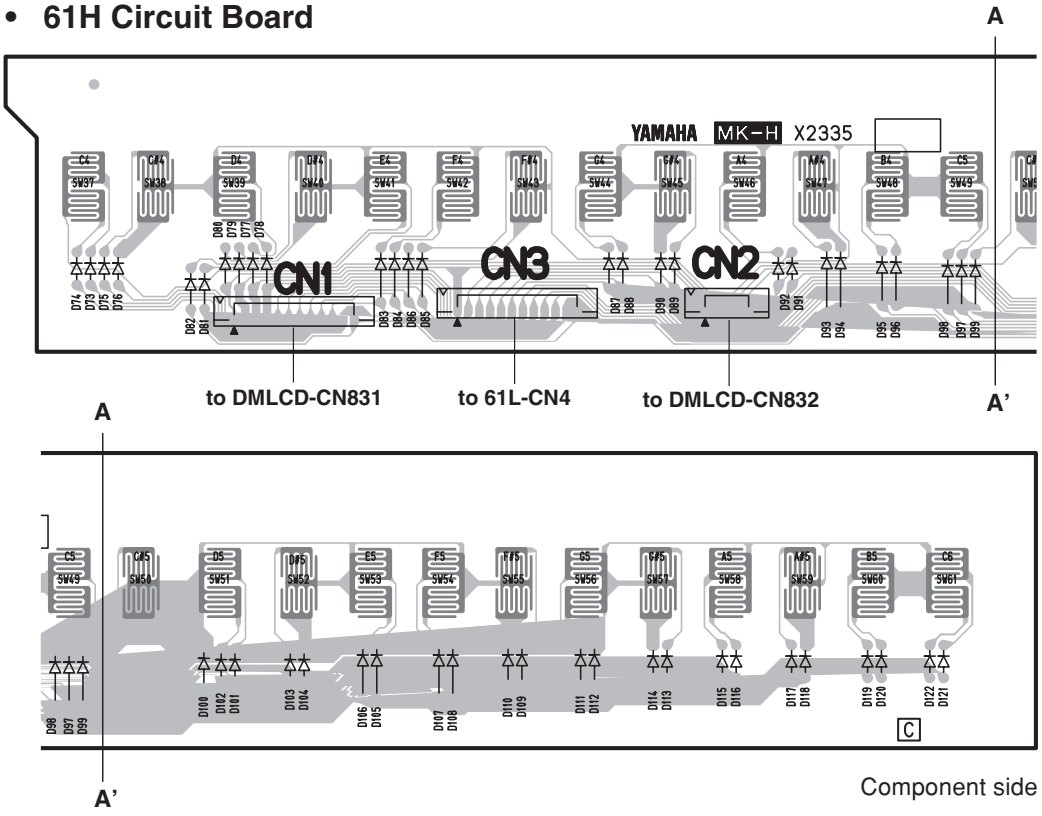

• 61L Circuit Board

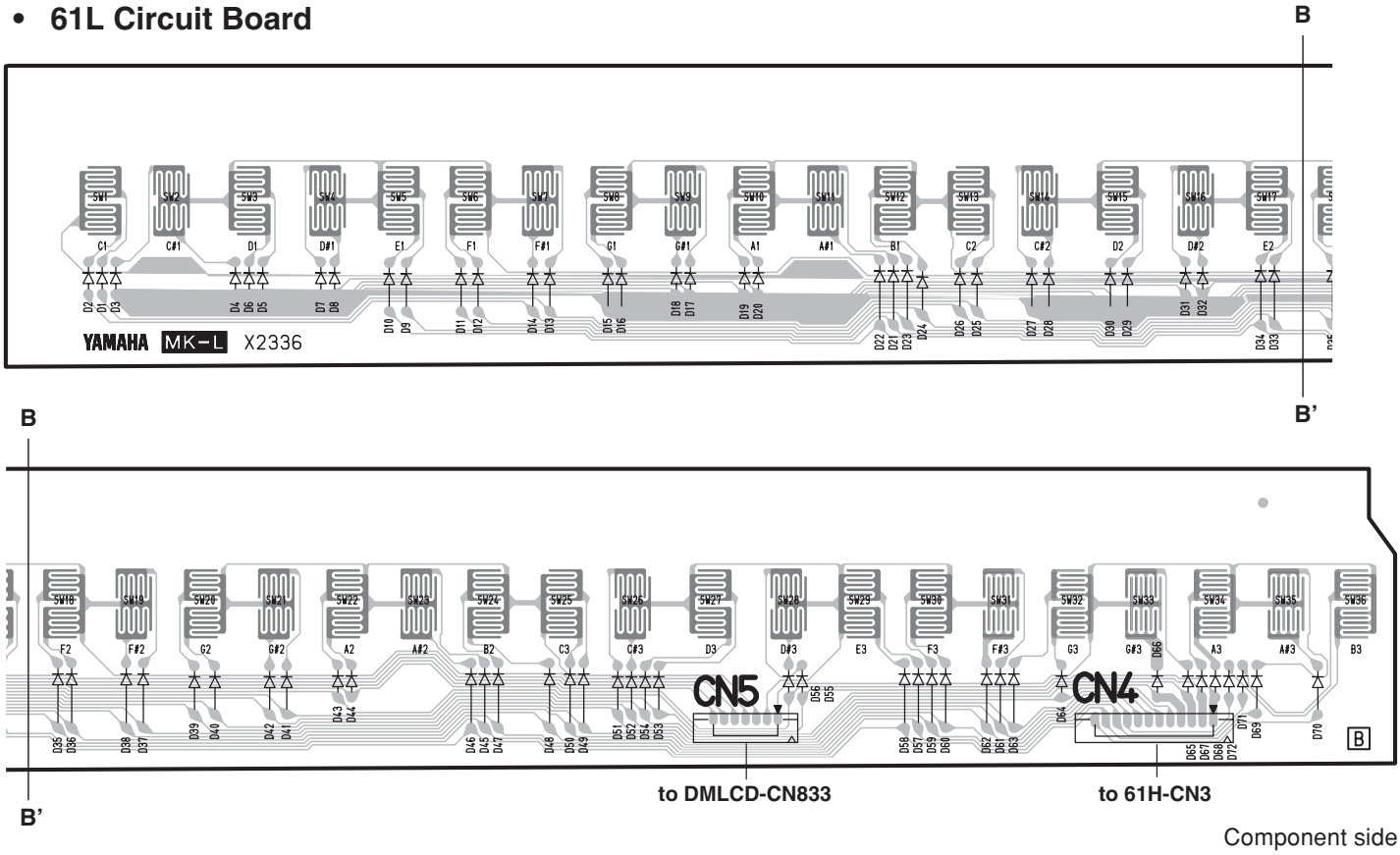

61H: 2NAKB-V869540
61L: 2NAKB-V869520

Downloaded from www.Manualslib.com manuals search engine

■ TEST PROGRAM

*** If the test number 47 "Factory Set" is executed, the data already set will be lost.**

1 Preparation

1) Use an AC adaptor PA-3C or PA-32.
2) Measuring device: Frequency counter, which can detect thousandth digit, Level meter (with JIS-C filter).
   Note: Connect a load resistor of 33 Ω to the terminal [PHONES/OUTPUT]. Input impedance of the measuring device should be 1 MΩ or more.
3) Jig: Foot switch (FC-4 or FC-5), MIDI cable.
4) Control condition
   MASTER VOLUME : MAX.
   PEDAL : OFF
   REVERB : OFF
   Others : Default status at the time of a power switch ON

2 Start-up the Test Program

Holding down the keys [C2#], [F2], [G2#] simultaneously, press the [STANDBY/ON] switch.

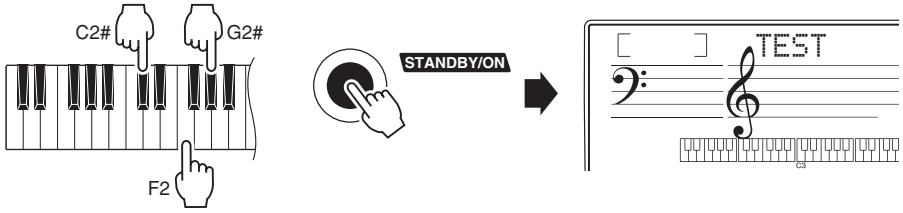

3 Test Procedure

1) When the test program is started, "**TEST**" will be displayed on the LCD.
2) Press the [–] or [+] button of the number buttons to select a test program item.
3) Press the [START/STOP] button to execute the test.
   If the result is OK or test item is completed, press the [START/STOP] button again to return to the item selection display.
   Press the [–] or [+] button of the number buttons to select the next test item.
   A cursor ("_") is shown below the first character of the item for which the test results are OK.
   If the results are NG, press the lowest key in the keyboard (white key C1) to return to the item selection display.

4 Test program list

(0 dBu = 0.775 V)

Test No.	LCD display	Test descriptions, judging conditions, etc.
1	001 : Version	Displays version of the ROM. "[***] **Prog**" is displayed on the LCD. [***] : Version
2	002 : Rom Chk1	ROM connected to the bus of the CPU is checked. Make sure that "**Rom OK**" is displayed on the LCD.
3	003 : Ram Chk1	RAM connected to the bus of the CPU is checked. Make sure that "**Ram OK**" is displayed on the LCD.
4	006 : FRomChk1	FROM connected to the bus of the CPU is checked. Make sure that "**FRom OK**" is displayed on the LCD.
5	011 : TG1 Chk	Plays each key automatically in the order of scale (auto-scaling). (32 notes from C2 to G4 will be played.) Check that there is no abnormal sounds or noise. When the auto-scaling is finished, "**TG1 End**" will be shown. Press a key to play a sound. (Single note, the key pressed first will be played)
6	013 : Pit Chk	Connect the frequency counter to the [PHONES/OUTPUT] terminal. (Either L or R) Checks pitch. (440.14 Hz ± 0.22 Hz) Check that the correct signal is output.

Downloaded from www.Manualslib.com manuals search engine

Test No.	LCD display	Test descriptions, judging conditions, etc.
7	014 : Output R	Connect the level meter (with JIS-C filter) to the L/R terminals of the [PHONES/OUTPUT]. (33 Ω of load) Set the [MASTER VOLUME] to the maximum level and check the output level. • PHONES L: -45 dBu or less • PHONES R: -1.5 dBu ± 2 dB
8	015 : Output L	Connect the level meter (with JIS-C filter) to the L/R terminals of the [PHONES/OUTPUT]. (33 Ω of load) Set the [MASTER VOLUME] to the maximum level and check the output level. • PHONES L: -1.5 dBu ± 2 dB • PHONES R: -45 dBu or less
9	019 : Noise	Connect the level meter (with JIS-C filter) to the L/R terminals of the [PHONES/OUTPUT]. (33 Ω of load) Set the [MASTER VOLUME] to the maximum level and check the noise. • PHONES L and PHONES R: -73 dBu or less
10	020 : SW Chk	Checks switches on the panel. Press the switches as shown in the LCD. When the switch is pressed, a sound is played at the prescribed pitch. (Refer to the Switch test item list.) Make sure that "**SW OK**" is displayed on the LCD when all the switches are pressed. To cancel the operation halfway, use the [lowest key on the keyboard] (white key C1) to return to the selection display.
11	028 : LCD On	Make sure that the entire LCD is lit .
12	029 : LCD Off	Make sure that all the dots are turned off on the LCD.
13	031 : PD1 Chk	Connect a footswitch (FC-4 or FC-5) to the [SUSTAIN] terminal. Make sure that C3 is played when the footswitch pedal is pressed and C4 is played when the footswitch pedal is released. Make sure that "**PD1 OK**" is displayed on the LCD when finished.
14	037 : MIDI Chk	Connect the [MIDI IN] jack and [MIDI OUT] jack with a MIDI cable and then execute the test. Make sure that C4 is played and "**MIDI OK**" is displayed on the LCD.
15	041 : Rom Chk2	Checks the ROM connected to the CPU bus. Make sure that "**Rom OK**" is displayed on the LCD. It will take about 10 seconds for the check.
16	042 : Ram Chk2	Checks the RAM connected to the CPU bus. Make sure that "**Ram OK**" is displayed on the LCD.
17	045 : FRomChk2	Checks the FROM connected to the CPU bus. Make sure that "**FRom OK**" is displayed on the LCD. It will take about 30 seconds for the check.
18	047 : Factory Set	Initializes the entire backup area to reset to the factory default. "**Fact**" is displayed on the LCD during the test. "**Fact End**" is displayed on the LCD when the test is finished.
19	048 : TEST Exit	Execute this to leave the test program and change to the play mode.

Switch test item list

Turn	SW Name	LCD Display	Note Number
1	LEFT	Left	C1
2	RIGHT	Right	C#1
3	LISTEN & LEARN	Listen	D1
4	TIMING	Timing	D#1
5	WAITING	Waiting	E1
6	FUNCTION	Function	F1
7	SONG	Song	F#1
8	STYLE	Style	G1
9	VOICE	Voice	G#1
10	TENKEY 1	Tenkey 1	A1
11	TENKEY 2	Tenkey 2	A#1
12	TENKEY 3	Tenkey 3	B1
13	TENKEY 4	Tenkey 4	C2
14	TENKEY 5	Tenkey 5	C#2
15	TENKEY 6	Tenkey 6	D2
16	TENKEY 7	Tenkey 7	D#2
17	TENKEY 8	Tenkey 8	E2
18	TENKEY 9	Tenkey 9	F2
19	TENKEY –	Tenkey –	F#2

Turn	SW Name	LCD Display	Note Number
20	TENKEY 0	Tenkey 0	G2
21	TENKEY +	Tenkey +	G#2
22	DEMO	Demo	A2
23	METRONOME	Metro	A#2
24	A-B REPEAT	AB Rep	B2
25	REW	Rew	C3
26	FF	FF	C#3
27	TEMPO/TAP	Temp/TAP	D3
28	REC	Record	D#3
29	PAUSE	Pause	E3
30	START/STOP	StartStp	F3
31	PORTABLE GRAND	GP	F#3
32	SOUND EFFECT	SoundEff	G3
33	REVERB ON/OFF	Reverb	G#3
34	SPLIT ON/OFF	Split	A3
35	DUAL ON/OFF	Dual	A#3
36	HARMONY ON/OFF	Harmony	B3
37	TOUCH ON/OFF	Touch	C4

Downloaded from www.Manualslib.com manuals search engine

■ BACKUP & INITIALIZATION

● Backup

The following settings are always backed up, and are maintained even when the power is turned off. If you want to initialize the settings, use the Initialize operation as explained below. You can also save the settings as backup data to your computer, by using the Musicsoft Downloader (MSD) software. Refer to the section “Transferring a backup file from the PSR-VN300 to a computer” on page 23.

- **Parameters that are saved in backup:**
  - User Songs
  - Style number 107
  - Touch Response on/off setting
  - The following Function settings: Tuning, Split Point, Touch Sensitivity, Style Volume, Song Volume, Metronome Volume, Demo Cancel, Panel Sustain

● Initialization

This function erases all backup data in the instrument’s flash memory and restores the initial default settings. The following initialization procedures are provided.

<Backup Clear>

To clear data backed up to the internal flash memory (described above), turn the power on by pressing the [STANDBY/ON] switch while holding the highest white key on the keyboard. The backed up data will be erased and the default values restored.

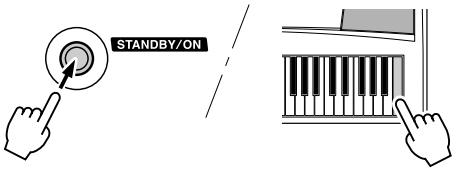

⚠ **CAUTION**

- When you execute the Backup Clear operation, backup parameters will be cleared.

<Flash Clear>

To clear Song data and Style data that has been transferred to the internal flash memory from a computer, simultaneously hold down the highest white key and the three highest black keys on the keyboard and turn the power on by pressing the [STANDBY/ON] switch.

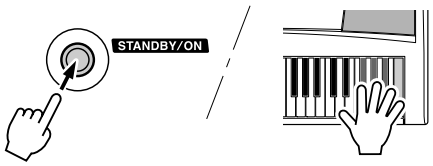

⚠ **CAUTION**

- When you execute the Flash Clear operation, Song data and Style data you have purchased and downloaded will also be cleared. Make sure to save your important data by transferring to a computer using Musicsoft Downloader (page 23).

Downloaded from www.Manualslib.com manuals search engine

TRANSFERRING DATA BETWEEN THE PSR-VN300 and a COMPUTER

The PSR-VN300 includes 110 preset Songs and 106 Styles, but you can load other Songs and Styles from your computer and use them in the same way as the preset Songs and Styles as long as the loaded Song is SMF format 0* or the loaded Style is SFF (Style File Format).
Loaded Song data will be stored to Song numbers beginning with 108 and one of the loaded style/s can be registered as the 107th style.
In order to perform the operations described in this section you will need to use a computer connected to the Internet to download the free Musicsoft Downloader application.

* The SMF (Standard MIDI File) format is one of the most common and widely compatible sequence formats used for storing sequence data. Most commercially available MIDI sequence data is provided in SMF Format 0.

● Installing Musicsoft Downloader

You can download the “Musicsoft Downloader” application from the following website. Make sure that your computer has an Internet connection.

http://music.yamaha.com/download/

The minimum computer requirements for Musicsoft Downloader operation are as follows:

- OS : Windows 98SE/Me/2000/XP Home Edition/XP Professional
- CPU : 233 MHz or higher; Intel® Pentium®/Celeron® processor family (500 MHz or more is recommended)
- Memory : 64 MB or more (256 MB or more is recommended)
- Hard Disk : at least 128 MB of free space (at least 512 MB of free space is recommended)
- Display : 800 x 600 HighColor (16-bit)
- Other : Microsoft® Internet Explorer® 5.5 or higher

NOTE

- Visit the Yamaha website for more information on the latest version of Musicsoft Downloader (version 5.4.0 or higher) and how to install it.

● Connecting a personal computer

After installing the Musicsoft Downloader application on your computer, connect the PSR-VN300 as described below.
A Yamaha UX16 or similar USB-MIDI interface (sold separately) will be necessary for MIDI connection between the PSR-VN300 and a USB-equipped computer.
Make sure to purchase a Yamaha UX16 or a quality USB-MIDI interface at a musical instrument store, computer store or electrical appliance store.
If you use the UX16 interface, install the driver supplied with the interface on your computer.

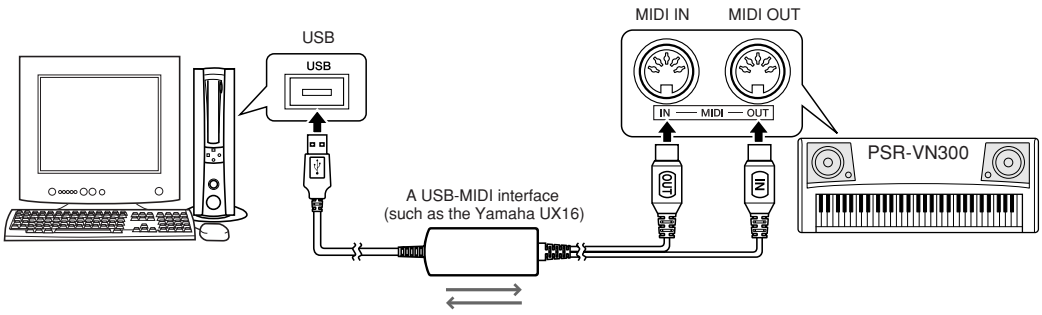

Downloaded from www.Manualslib.com manuals search engine

● Transferring a file from a computer

You can transmit Song files and Style Files from your computer to the Flash Memory on your PSR-VN300. For details about how to transmit Song file and Style File using the Musicsoft Downloader application, refer to the Online help topic “Transferring Data Between the Computer and Instrument (for unprotected data)” of the Musicsoft Downloader.

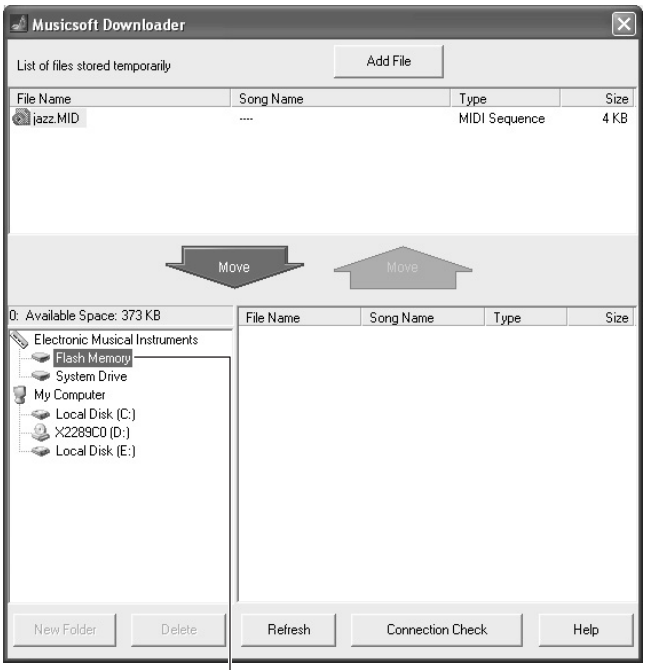

Data that can be loaded to the PSR-VN300 from a computer

- Songs : 99 Songs max (Song numbers 116–)
- Data : 373 kilobytes
- Data Format : SMF Format 0
- File : 07PK3.BUP (Backup file)
  : ***.mid (MIDI Song)
  : ***.sty (Style File)

NOTE

- The Musicsoft Downloader application may not be able to access the instrument in the following cases:
  • During Style playback
  • During Song playback
- Close the window to exit from the Musicsoft Downloader and re-enable control of the instrument.

⚠ **CAUTION**

- Use the power adaptor when transferring data. The data can be corrupted if the batteries fail during the transfer.
- Never turn the power off and never plug/unplug the AC power adaptor during data transmission. Not only will the data fail to be transferred and saved, but operation of the flash memory may become unstable and its contents may disappear completely when the power is turned on or off.

Downloaded from www.Manualslib.com manuals search engine

● Transferring a backup file from the PSR-VN300 to a computer

You can transfer backup data (page 22) to a computer as a “backup file” by using Musicsoft Downloader. For details about how to transmit backup files using the Musicsoft Downloader application, refer to the Online help topic “Transferring Data Between the Computer and Instrument (for unprotected data)” of the Musicsoft Downloader.

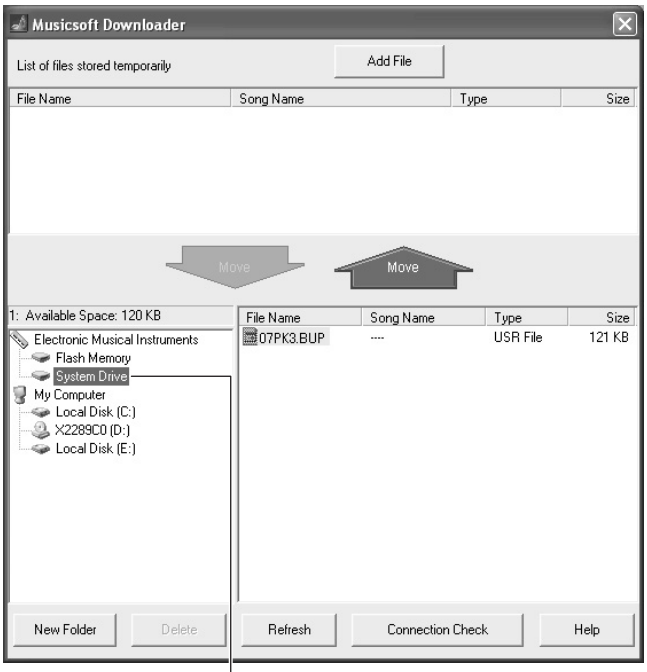

NOTE

- Preset Song data cannot be transmitted from the PSR-VN300.
- Do not rename the backup file on the computer. If you do so, it will not be recognized when transferred to the instrument.

⚠ **CAUTION**

- The backup data, including the five User Songs is transmitted/received as a single file. As a result, all backup data (including the five Songs) will be overwritten every time you transmit or receive. Keep this in mind when transferring data.

Data that can be transferred to a computer from the PSR-VN300

- Backup file (07PK3.BUP: backup data containing five User Songs)
- Songs transferred from a computer

- **Erasing Transferred Song Data from the PSR-VN300 Memory**
  To erase all Songs transferred from the computer, use “flash clear” function on page 22.
  To erase specific Songs transferred from the computer, use the Delete function on Musicsoft Downloader.
- **Using Transferred Songs for Lessons**
  In order to use Songs (only SMF format 0) transferred from a computer for lessons it is necessary to specify which channels are to be played back as the right-hand and left-hand parts. The procedure for setting the “guide track” is as follows:
  Select a transferred Song you want to use for lessons. Press the [FUNCTION] button a number of times until the “R-Part” or “L-Part” appears in the display, and then use the number buttons [0]–[9], [+], [-] to select the channel you want to play back as the specified right- or left-hand part.
  We recommend that you select channel 1 for the right-hand part and channel 2 for the left-hand part.

Downloaded from www.Manualslib.com manuals search engine

■ MIDI IMPLEMENTATION CHART

YAMAHA [Portable Keyboard] Date:21-Aug-2006
Model PSR-VN300 MIDI Implementation Chart Version:1.0

Function...		Transmitted		Recognized	Remarks
Basic Channel	Default	1 - 16		1 - 16	
	Changed	x		x	
Mode	Default	3		3	
	Messages	x		x	
	Altered	**********		x	
Note Number : True voice		0 - 127		0 - 127	
		**********		0 - 127	
Velocity	Note ON	o 9nH,v=1-127		o 9nH,v=1-127	
	Note OFF	x		x	
After Touch	Key's	x		x	
	Ch's	x		x	
Pitch Bend		x		o	
Control Change	0,32	o		o	Bank Select
	1	x	*1	o	Modulation wheel
	6	x	*1	o	Data Entry(MSB)
	38	x	*1	x	Data Entry(LSB)
	7,10	o		o	
	11	x	*1	o	Expression
	64	o		o	Sustain
	71,73,74	x	*1	o	
	72	o		o	Release Time
	84	x	*1	o	Portamento Cntrl
	91,93	o		o	Effect 1,3 Depth
	96,97	x		o	RPN Inc,Dec
	100,101	x		o	RPN LSB,MSB
Prog Change : True #		o 0 - 127		o 0 - 127	
		**********			
System Exclusive		o		o	
Common : Song Pos.		x		x	
: Song Sel.		x		x	
: Tune		x		x	
System : Clock		o		o	
Real Time: Commands		o		o	
Aux :All Sound OFF		x		o(120,126,127)	
:Reset All Cntrls		x		o(121)	
:Local ON/OFF		x		o(122)	
Mes- :All Notes OFF		x		o(123-125)	
sages:Active Sense		o		o	
:Reset		x		x	

*1 Messages for these control change numbers cannot be transmitted from the instrument itself. However, they may be transmitted when playing the accompaniment, song or using the Harmony effect.

Mode 1 : OMNI ON , POLY Mode 2 : OMNI ON ,MONO o : Yes
Mode 3 : OMNI OFF, POLY Mode 4 : OMNI OFF,MONO x : No

Downloaded from www.Manualslib.com manuals search engine

MIDI DATA FORMAT

NOTE:

1 By default (factory settings) the instrument ordinarily functions as a 16-channel multi-timbral tone generator, and incoming data does not affect the panel voices or panel settings. However, the MIDI messages listed below do affect the panel voices, auto accompaniment, and songs.
- *MIDI Master Tuning*
- *System exclusive messages for changing the Reverb Type and Chorus Type.*

2 Messages for these control change numbers cannot be transmitted from the instrument itself. However, they may be transmitted when playing the accompaniment, song or using the Harmony effect.

3 Exclusive
<GM System ON> F0H, 7EH, 7FH, 09H, 01H, F7H
- *This message automatically restores all default settings for the instrument, with the exception of MIDI Master Tuning.*

<MIDI Master Volume> F0H, 7FH, 7FH, 04H, 01H, ll, mm, F7H
- *This message allows the volume of all channels to be changed simultaneously (Universal System Exclusive).*
- *The values of "mm" is used for MIDI Master Volume. (Values for "ll" are ignored.)*

<MIDI Master Tuning> F0H, 43H, 1nH, 27H, 30H, 00H, 00H, mm, ll, cc, F7H
- *This message simultaneously changes the tuning value of all channels.*
- *The values of "mm" and "ll" are used for MIDI Master Tuning.*
- *The default value of "mm" and "ll" are 08H and 00H, respectively. Any values can be used for "n" and "cc."*

<Reverb Type> F0H, 43H, 1nH, 4CH, 02H, 01H, 00H, mmH, llH, F7H
- *mm : Reverb Type MSB*
- *ll : Reverb Type LSB*

Refer to the Effect Map for details.

<Chorus Type> F0H, 43H, 1nH, 4CH, 02H, 01H, 20H, mmH, llH, F7H
- *mm : Chorus Type MSB*
- *ll : Chorus Type LSB*

Refer to the Effect Map for details.

4 When the accompaniment is started, an FAH message is transmitted. When accompaniment is stopped, an FCH message is transmitted. When the clock is set to External, both FAH (accompaniment start) and FCH (accompaniment stop) are recognized.

5 Local ON/OFF
<Local ON> Bn, 7A, 7F
<Local OFF> Bn, 7A, 00
Value for "n" is ignored.

Effect map

* When a Type LSB value is received that corresponds to no effect type, a value corresponding to the effect type (coming the closest to the specified value) is automatically set.

* The numbers in parentheses in front of the Effect Type names correspond to the number indicated in the display.

REVERB

TYPE MSB	TYPE LSB								
	0	1	2	8	16	17	18	19	20
0	No Effect								
1	(01)Hall1				(02)Hall2	(03)Hall3			
2	Room					(04)Room1		(05)Room2	
3	Stage				(06)Stage1	(07)Stage2			
4	Plate				(08)Plate1	(09)Plate2			
5...127	No Effect								

CHORUS

TYPE MSB	TYPE LSB								
	0	1	2	8	16	17	18	19	20
0...63	No Effect								
64	Thru								
65	Chorus		(2)Chorus2						
66	Celeste					(1)Chorus1			
67	Flanger			(3)Flanger1		(4)Flanger2			
68...127	No Effect								

Downloaded from www.Manualslib.com manuals search engine

PORTATONE

PSR-VN300

PARTS LIST

■ CONTENTS

OVERALL ASSEMBLY 2
LOWER CASE KEYBOARD ASSEMBLY 4
KEYBOARD ASSEMBLY 5
ELECTRICAL PARTS 6

Notes: DESTINATION ABBREVIATIONS

A :	Australian model	M :	South African model
B :	British model	O :	Chinese model
C :	Canadian model	Q :	South-east Asia model
D :	German model	T :	Taiwan model
E :	European model	U :	U.S.A. model
F :	French model	V :	General export model (110V)
H :	North European model	W:	General export model (220V)
I :	Indonesian model	N,X:	General export model
J :	Japanese model	Y :	Export model
K :	Korean model		

■ WARNING

Components having special characteristics are marked ⚠ and must be replaced with parts having specification equal to those originally installed.

- The numbers “QTY” show quantities for each unit.
- The parts with “--” in “PART NO.” are not available as spare parts.
- This mark “ } ” in the REMARKS column means these parts are interchangeable.
- The second letter of the shaded ( ) part number is O, not zero.
- The second letter of the shaded ( ) part number is I, not one.

Downloaded from www.Manualslib.com manuals search engine

■ OVERALL ASSEMBLY

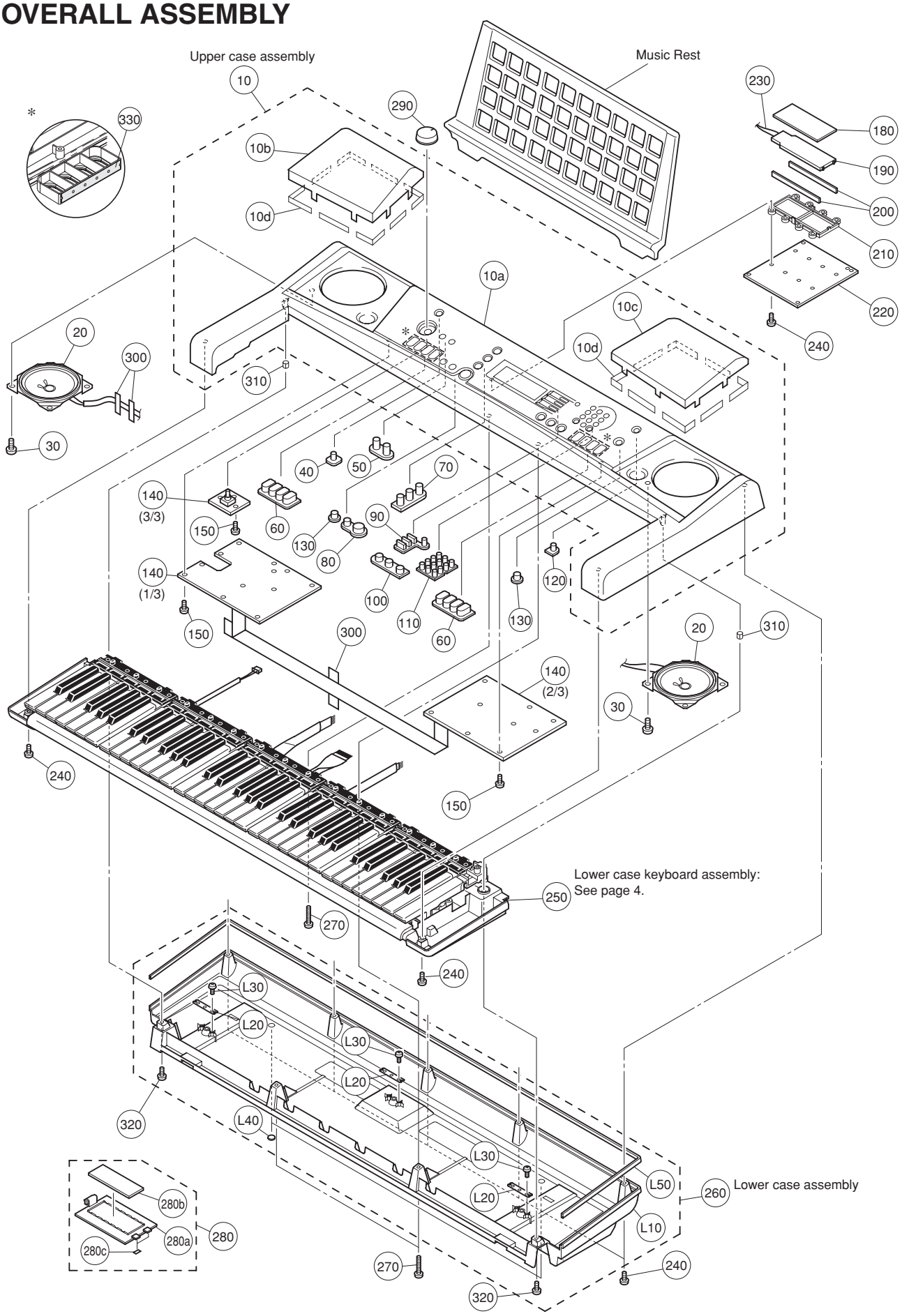

Downloaded from www.Manualslib.com manuals search engine

	REF NO.	PART NO.	DESCRIPTION			REMARKS	QTY	RANK
			OVERALL ASSEMBLY			PSR-VN300		
		--	Overall Assembly			(WH99910)		
*	10	**WJ000200**	Upper Case Assembly					
	10a	--	Upper Case Painted			(WJ00060)		
	10b	**WD550200**	Speaker Grille L					06
	10c	**WD550300**	Speaker Grille R					06
	10d	--	Nonwoven Fabric Cloth			(WF25430)	16	
	20	**X6553A00**	Speaker	12cm 4ohm 3W			2	04
	30	**WE974600**	Bind Head Tapping Screw-B	4x8 MFZN2W3			8	01
	40	**WD893400**	Panel Switch	x1		STANDBY/ON		01
	50	**WD893600**	Panel Switch	x2		LESSON PART L,R		01
	60	**WD893700**	Panel Switch	x4		A-B REPEAT,...,TEMPO/TAP SPLIT ON/OFF,...,TOUCH ON/OFF	2	03
	70	**WH707500**	PN Switch	x3		LISTEN&LEARN,...,WAITING		
	80	**WH707600**	PN Switch	x2		PAUSE,START/STOP		
	90	**WD894000**	Panel Switch	x4		SONG,STYLE,VOICE FUNCTION		01
	100	**WH707700**	PN Switch	x3		PORTABLE GRAND,••• REVERB,ON/OFF		
	110	**WH707800**	PN Switch Printed			0-9,-,+		
	120	**WD894400**	Panel Switch	x1		DEMO		01
	130	**WD894500**	Panel Switch	x1		METRONOME ON/OFF,REC	2	01
	140	**WE005400**	Circuit Board	PNAM		1/3,2/3,3/3		10
	150	**WE774300**	Bind Head Tapping Screw-B	3x8 MFZN2W3			24	01
	180	**WD570800**	LCD	TTR TYPE-05B				06
	190	**WE200200**	Back Light Assembly					06
	200	**V7838000**	Rubber Connector	105X10.7)-0.35WZ			2	03
	210	**V7172300**	LCD Holder					01
*	220	**WJ168300**	Circuit Board	DMLCD				
	230	--	Cable	2P L=70		(WE14140)		
	240	**WE987400**	Bind Head Tapping Screw-B	3x12 MFZN2W3			15	01
	250	--	Lower Case Keyboard Assembly			(WH74380)		
	260	**WH743900**	Lower Case Assembly					
	270	**WF491000**	Bind Head Screw	3x30 MFZN2W3			3	01
	280	**WD896000**	Battery Lid Assembly					03
	280a	--	Battery Cover			(WD87980)		
	280b	--	Battery Cushion	WHITE		(WD87990)		
	280c	--	Nonwoven Fabric Cloth			(WD88000)	2	
	290	**VU432400**	Knob			MASTER VOLUME		01
	300	**VA126100**	Adhesive Tape	12x50			3	01
	300	--	Pet Tape	MY7# 12X50		(WB79380)	3	
	310	--	Nonwoven Fabric Cloth			(WF25440)	2	
	320	**WF489300**	Bind Head Screw	3x20 MFZN2W3			2	01
	330	--	Nonwoven Fabric Cloth			(WG81830)	2	
		WH743900	Lower Case Assembly					
	L10	--	Lower Case			(WH74410)		
	L20	**VI104400**	Holder				3	
	L30	**WE774300**	Bind Head Tapping Screw-B	3x8 MFZN2W3			6	01
	L40	**CB043750**	Foot	T1.6			2	01
	L50	--	Cushion PE	650x15x1		(WE45790)	2	
			ACCESSORIES			PSR-VN300		
		WH744200	Music Rest					

*: New Parts

RANK: Japan only

Downloaded from www.Manualslib.com manuals search engine

■ LOWER CASE KEYBOARD ASSEMBLY

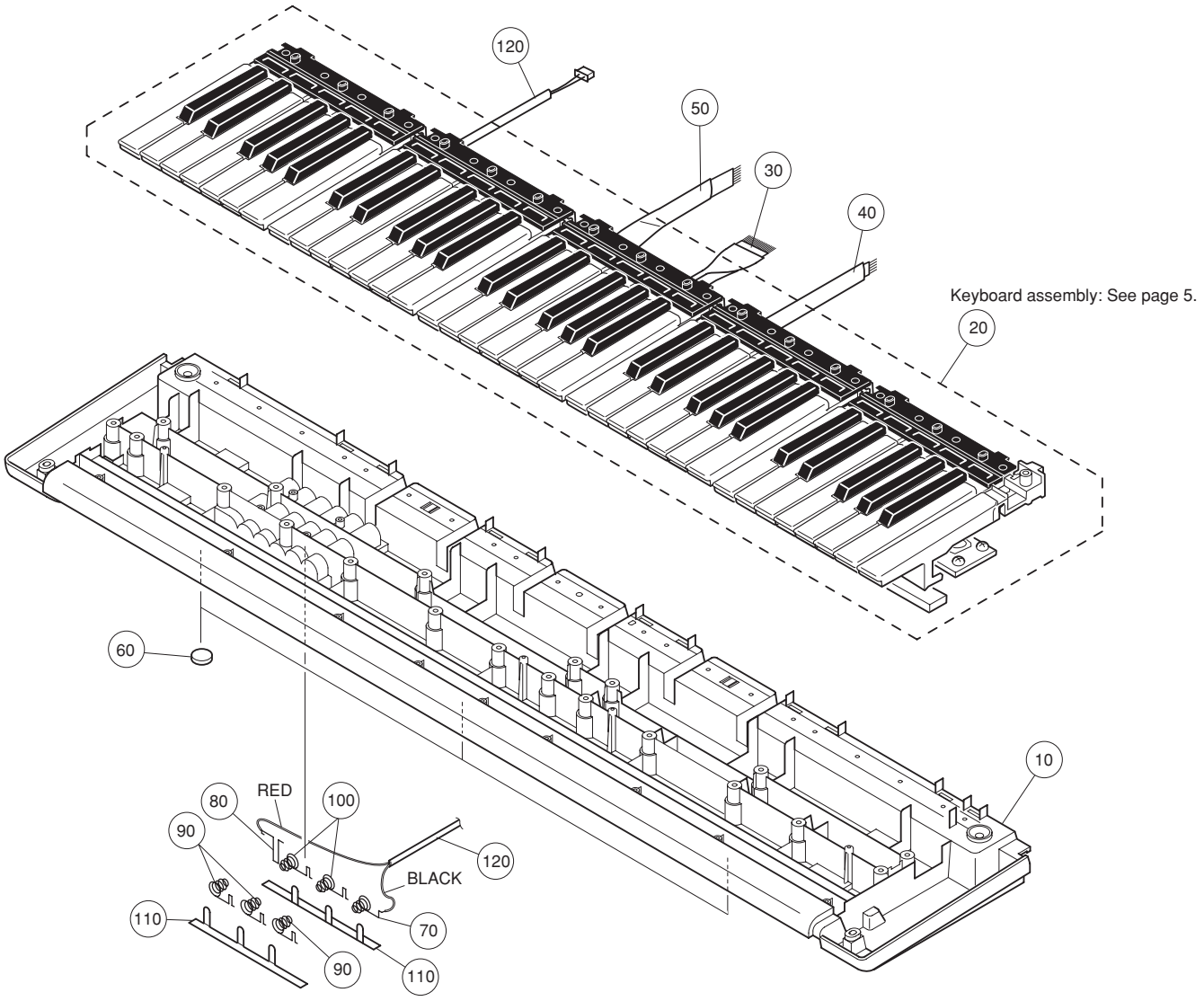

REF NO.	PART NO.	DESCRIPTION			REMARKS	QTY	RANK
	--	Lower Case Keyboard Assembly			PSR-VN300 (WH74380)		
10	**WH744000**	Lower Case					
20	--	Keyboard Assembly	16N C61 P2M		(WE12670)		
30	**WE138500**	Connector Assembly	MK1 12P L=220				01
40	**WE138700**	Connector Assembly	MK2 5P L=250				01
50	**WE138800**	Connector Assembly	MK3 7P L=190				01
60	**CB043750**	Foot	T1.6			3	01
70	**WD879200**	Spring Terminal A					01
80	**WD879300**	Spring Terminal B					01
90	**WD879400**	Spring Terminal C				3	01
100	**WD879700**	Spring Terminal D				2	01
110	--	Nonwoven Fabric Cloth			(WD89680)	2	
120	--	Connector Assembly	BATT		(WE15140)		

*: New Parts

RANK: Japan only

Downloaded from www.Manualslib.com manuals search engine

■ KEYBOARD ASSEMBLY

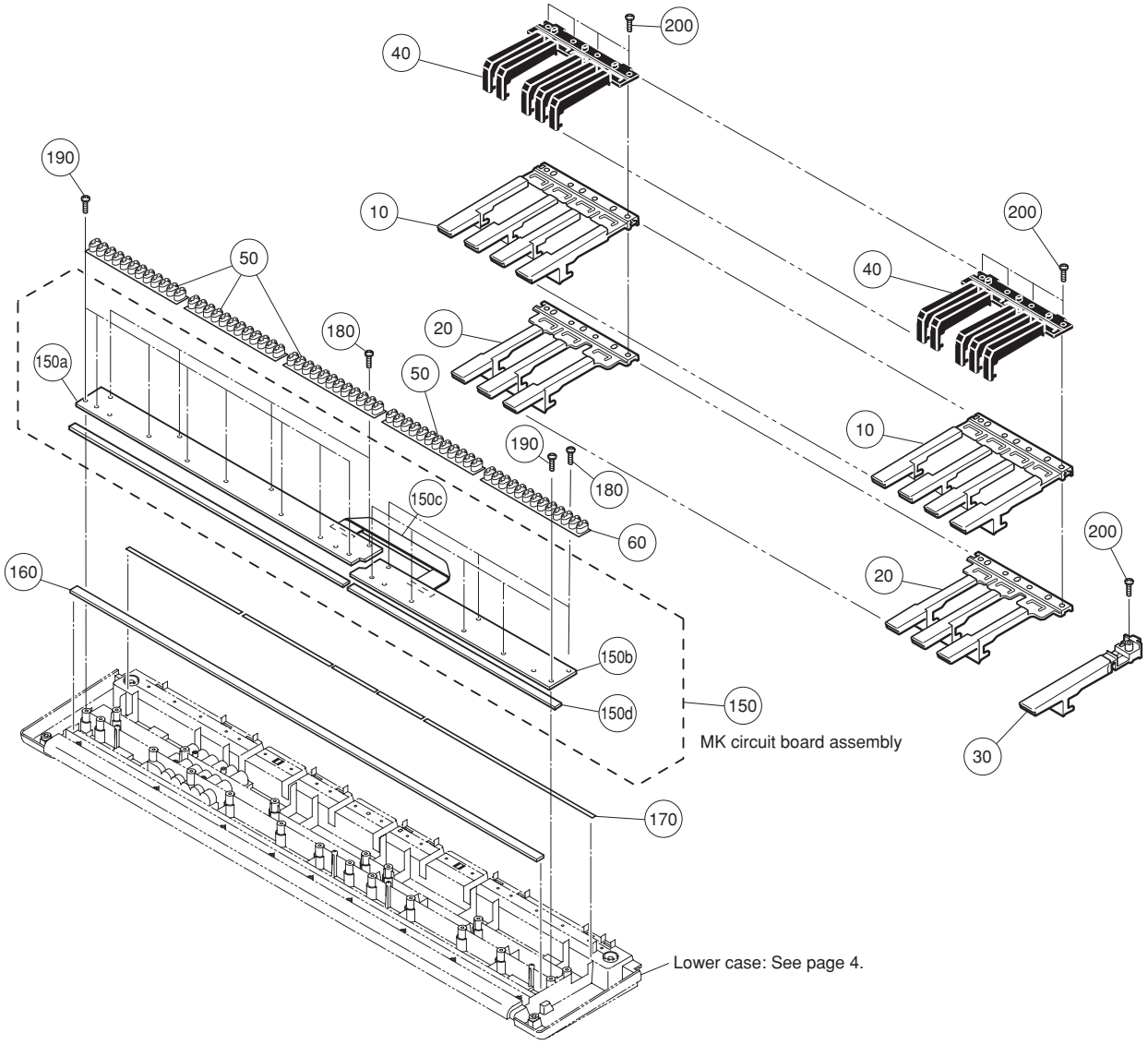

REF NO.	PART NO.	DESCRIPTION			REMARKS	QTY	RANK
	--	Keyboard Assembly	16N C61 P2M		PSR-VN300 (WE12670)		
10	**V3412600**	White Key	16N CEGB			5	
10	**WB125200**	White Key	CEGB			5	02
20	**V3412700**	White Key	16L DFA			5	
20	**WB125300**	White Key	DFA			5	02
30	**V4760300**	White Key	C		C6		02
40	**VZ271700**	Black Key	16N			5	06
50	**V3413600**	Rubber Contact	16N-2M OCT 2M			4	04
60	**V7477400**	Rubber Contact	M 13K 2M		C5-C6		04
150	--	Circuit Board Assembly	MK		(V869560)		
150a	**V8695300**	Circuit Board	61L				04
150b	**V8695500**	Circuit Board	61H				04
150c	**V8696200**	Connector Assembly	16N-2M-C61 L=210				01
150d	**VZ302900**	Felt U					02
160	**VZ303000**	Felt L					02
170	**VH181400**	Rubber Sheet					01
180	**WE774300**	Bind Head Tapping Screw-B	3x8 MFZN2W3			7	01
190	**WH899400**	Bind Head Tapping Screw-P	3x12 MFZN2W3 SP			13	01
200	**WF492000**	Bind Head Tapping Screw-P	3x20 MFZN2W3			21	01

*: New Parts

RANK: Japan only

Downloaded from www.Manualslib.com manuals search engine

■ ELECTRICAL PARTS

	REF NO.	PART NO.	DESCRIPTION			REMARKS	QTY	RANK
			ELECTRICAL PARTS			PSR-VN300		
*		**WJ168300**	Circuit Board	DMLCD		(WJ16820)(X5910C0)		
		WE005400	Circuit Board	PNAM		1/3,2/3,3/3 (X5911C0)		10
		V8695500	Circuit Board	61H		(V869540)(X2335C0)		04
		V8695300	Circuit Board	61L		(V869520)(X2336B0)		04
*		**WJ168300**	Circuit Board	DMLCD		(WJ16820)(X5910C0)		
	C0131	**UF037100**	Electrolytic Cap. (chip)	10uF 16V				01
	C0132	**US145100**	Ceramic Capacitor-F (chip)	0.1uF 25V Z				01
	C0133	**US145100**	Ceramic Capacitor-F (chip)	0.1uF 25V Z				01
	C0134	**UF037100**	Electrolytic Cap. (chip)	10uF 16V				01
	C0135	**US145100**	Ceramic Capacitor-F (chip)	0.1uF 25V Z				01
	C0136	**US145100**	Ceramic Capacitor-F (chip)	0.1uF 25V Z				01
	C0137	**UF037100**	Electrolytic Cap. (chip)	10uF 16V				01
	C0139	**US062100**	Ceramic Capacitor-SL(chip)	100pF 50V J				01
	C0140	**US062100**	Ceramic Capacitor-SL(chip)	100pF 50V J				01
	C0201	**US145100**	Ceramic Capacitor-F (chip)	0.1uF 25V Z				01
	-208	**US145100**	Ceramic Capacitor-F (chip)	0.1uF 25V Z				01
	C0301	**US145100**	Ceramic Capacitor-F (chip)	0.1uF 25V Z				01
	-304	**US145100**	Ceramic Capacitor-F (chip)	0.1uF 25V Z				01
	C0305	**UF028100**	Electrolytic Cap. (chip)	100uF 10V				01
	C0306	**US062220**	Ceramic Capacitor-SL(chip)	220pF 50V J				01
	C0307	**US063470**	Ceramic Capacitor-B (chip)	4700pF 50V K				01
	C0308	**US145100**	Ceramic Capacitor-F (chip)	0.1uF 25V Z				01
	C0309	**US062100**	Ceramic Capacitor-SL(chip)	100pF 50V J				01
	C0310	**US145100**	Ceramic Capacitor-F (chip)	0.1uF 25V Z				01
	-315	**US145100**	Ceramic Capacitor-F (chip)	0.1uF 25V Z				01
	C0317	**US145100**	Ceramic Capacitor-F (chip)	0.1uF 25V Z				01
	C0319	**US145100**	Ceramic Capacitor-F (chip)	0.1uF 25V Z				01
	-326	**US145100**	Ceramic Capacitor-F (chip)	0.1uF 25V Z				01
	C0327	**US061220**	Ceramic Capacitor-CH(chip)	22pF 50V J				01
	C0328	**US061220**	Ceramic Capacitor-CH(chip)	22pF 50V J				01
	C0431	**US145100**	Ceramic Capacitor-F (chip)	0.1uF 25V Z				01
	C0432	**UF037100**	Electrolytic Cap. (chip)	10uF 16V				01
	C0433	**US145100**	Ceramic Capacitor-F (chip)	0.1uF 25V Z				01
	C0434	**US062100**	Ceramic Capacitor-SL(chip)	100pF 50V J				01
	C0435	**US062100**	Ceramic Capacitor-SL(chip)	100pF 50V J				01
	C0436	**US062680**	Ceramic Capacitor-SL(chip)	680pF 50V J				01
	-439	**US062680**	Ceramic Capacitor-SL(chip)	680pF 50V J				01
	C0440	**UF066470**	Electrolytic Cap. (chip)	4.7uF 50V UWX1H4				01
	C0441	**UF066470**	Electrolytic Cap. (chip)	4.7uF 50V UWX1H4				01
	C0442	**US062100**	Ceramic Capacitor-SL(chip)	100pF 50V J				01
	C0443	**US062100**	Ceramic Capacitor-SL(chip)	100pF 50V J				01
	C0444	**UF028100**	Electrolytic Cap. (chip)	100uF 10V				01
	C0445	**US145100**	Ceramic Capacitor-F (chip)	0.1uF 25V Z				01
	C0446	**UF037100**	Electrolytic Cap. (chip)	10uF 16V				01
	C0447	**US145100**	Ceramic Capacitor-F (chip)	0.1uF 25V Z				01
	C0531	**US062100**	Ceramic Capacitor-SL(chip)	100pF 50V J				01
	-546	**US062100**	Ceramic Capacitor-SL(chip)	100pF 50V J				01
	C0631	**US062100**	Ceramic Capacitor-SL(chip)	100pF 50V J				01
	-636	**US062100**	Ceramic Capacitor-SL(chip)	100pF 50V J				01
	C0701	**US145100**	Ceramic Capacitor-F (chip)	0.1uF 25V Z				01
	-704	**US145100**	Ceramic Capacitor-F (chip)	0.1uF 25V Z				01
	C0705	**UF037100**	Electrolytic Cap. (chip)	10uF 16V				01
	C0831	**US145100**	Ceramic Capacitor-F (chip)	0.1uF 25V Z				01
	C0832	**US145100**	Ceramic Capacitor-F (chip)	0.1uF 25V Z				01
	C0833	**US061470**	Ceramic Capacitor-CH(chip)	47pF 50V J				01
	-843	**US061470**	Ceramic Capacitor-CH(chip)	47pF 50V J				01
	C0904	**US145100**	Ceramic Capacitor-F (chip)	0.1uF 25V Z				01
	-908	**US145100**	Ceramic Capacitor-F (chip)	0.1uF 25V Z				01
	C0912	**US145100**	Ceramic Capacitor-F (chip)	0.1uF 25V Z				01
	C0916	**US145100**	Ceramic Capacitor-F (chip)	0.1uF 25V Z				01
	-936	**US145100**	Ceramic Capacitor-F (chip)	0.1uF 25V Z				01
	CN131	**VK025500**	Wire Trap	52147 11P TE				01
	CN531	**VJ861600**	Wire Trap	52147 16P TE				01
	CN631	**VK025300**	Wire Trap	52147 9P TE				01
	CN831	**VK025600**	Wire Trap	52147 12P TE				01
	CN832	**VK024900**	Wire Trap	52147 5P TE				01
	CN833	**VK025100**	Wire Trap	52147 7P TE				01
	IC131	**X5889A00**	IC	BA33BC0FP		REGULATOR +3.3V		03

*: New Parts

RANK: Japan only

Downloaded from www.Manualslib.com manuals search engine

DMLCD

	REF NO.	PART NO.	DESCRIPTION			REMARKS	QTY	RANK
	IC132	**X3679A00**	IC	RH5RZ25CA-T1-F		REGULATOR +2.5V		03
*	IC201	**X8304100**	IC	MR27T6402L-0PKTNZ0		MASK ROM PROG/WAVE		
	IC202	**X7130A00**	IC	MX29LV400CBTC-70G		FLASH MEMORY 4M		04
	IC203	**X2726A00**	IC	GLT440L16-40TC		DRAM 4M		05
	IC203	**X6504A00**	IC	M11L416256SA-35TG		DRAM 4M		05
	IC203	**X6504B00**	IC	M11L416256SA-35TG		4M DRAM		
	IC204	**IS003200**	IC	HD74LV32AFPEL		OR		01
	IC204	**X4176A00**	IC	SN74LV32ANSR OR		OR GATE		01
	IC301	**X6055A00**	IC	YMW767-VTZ		CPU		10
	IC302	**X4374A00**	IC	S-80136ANMC-JCV-T2		RESET		01
	IC302	**X5888A00**	IC	BD45365G		RESET		01
	IC431	**X6040A00**	IC	AK4385ET		DAC		03
	IC432	**X2331A00**	IC	NJM4580E TE2		OP AMP		01
	IC701	**X3148A00**	IC	NT3881DF-01		LCD DRIVER		05
	IC701	**XZ987A00**	IC	ML9040A-B01GAZ03A		LCD DRIVER		05
	IC831	**IS013810**	IC	SN74LV138ANSR		DECODER		01
	IC832	**IS013810**	IC	SN74LV138ANSR		DECODER		01
	L0431	**VY657200**	Chip Inductance	600 BK1608HM601				01
	R0131	**RD356100**	Carbon Resistor (chip)	1.0K 1/16W J				01
	R0132	**RD356100**	Carbon Resistor (chip)	1.0K 1/16W J				01
	R0201	**RD357470**	Carbon Resistor (chip)	47K 1/16W J				01
	R0203	**RD350000**	Carbon Resistor (chip)	0 1/16W J				01
	R0205	**RD350000**	Carbon Resistor (chip)	0 1/16W J				01
	R0207	**RD357100**	Carbon Resistor (chip)	10K 1/16W J				01
	R0208	**RD357100**	Carbon Resistor (chip)	10K 1/16W J				01
	R0209	**RD357470**	Carbon Resistor (chip)	47K 1/16W J				01
	-215	**RD357470**	Carbon Resistor (chip)	47K 1/16W J				01
	R0301	**RD356100**	Carbon Resistor (chip)	1.0K 1/16W J				01
	R0302	**RD350000**	Carbon Resistor (chip)	0 1/16W J				01
	R0304	**RD359100**	Carbon Resistor (chip)	1.0M 1/16W J				01
	R0305	**RD355470**	Carbon Resistor (chip)	470 1/16W J				01
	R0306	**RD357100**	Carbon Resistor (chip)	10K 1/16W J				01
	R0307	**RD357470**	Carbon Resistor (chip)	47K 1/16W J				01
	R0308	**RD357470**	Carbon Resistor (chip)	47K 1/16W J				01
	R0310	**RD357470**	Carbon Resistor (chip)	47K 1/16W J				01
	R0311	**RD358470**	Carbon Resistor (chip)	470K 1/16W J				01
	R0312	**RD358470**	Carbon Resistor (chip)	470K 1/16W J				01
	R0313	**RD354470**	Carbon Resistor (chip)	47 1/16W J				01
	R0435	**RD356820**	Carbon Resistor (chip)	8.2K 1/16W J				01
	-438	**RD356820**	Carbon Resistor (chip)	8.2K 1/16W J				01
	R0439	**RD356390**	Carbon Resistor (chip)	3.9K 1/16W J				01
	-446	**RD356390**	Carbon Resistor (chip)	3.9K 1/16W J				01
	R0447	**RD355100**	Carbon Resistor (chip)	100 1/16W J				01
	R0448	**RD355100**	Carbon Resistor (chip)	100 1/16W J				01
	R0449	**RD356120**	Carbon Resistor (chip)	1.2K 1/16W J				01
	R0450	**RD356150**	Carbon Resistor (chip)	1.5K 1/16W J				01
	R0451	**RD350000**	Carbon Resistor (chip)	0 1/16W J				01
	R0531	**RD355100**	Carbon Resistor (chip)	100 1/16W J				01
	-538	**RD355100**	Carbon Resistor (chip)	100 1/16W J				01
	R0539	**RD356100**	Carbon Resistor (chip)	1.0K 1/16W J				01
	-546	**RD356100**	Carbon Resistor (chip)	1.0K 1/16W J				01
	R0547	**RD357330**	Carbon Resistor (chip)	33K 1/16W J				01
	-554	**RD357330**	Carbon Resistor (chip)	33K 1/16W J				01
	R0631	**RD356100**	Carbon Resistor (chip)	1.0K 1/16W J				01
	-636	**RD356100**	Carbon Resistor (chip)	1.0K 1/16W J				01
	R0701	**RD356150**	Carbon Resistor (chip)	1.5K 1/16W J				01
	R0702	**RD355220**	Carbon Resistor (chip)	220 1/16W J				01
	R0703	**RD354680**	Carbon Resistor (chip)	68 1/16W J				01
	R0704	**RF457910**	Carbon Resistor (chip)	91K 1/16W D				
	R0705	**RD356220**	Carbon Resistor (chip)	2.2K 1/16W J				01
	-709	**RD356220**	Carbon Resistor (chip)	2.2K 1/16W J				01
	R0710	**RD357100**	Carbon Resistor (chip)	10K 1/16W J				01
	R0711	**RD357470**	Carbon Resistor (chip)	47K 1/16W J				01
	R0831	**RD355100**	Carbon Resistor (chip)	100 1/16W J				01
	-833	**RD355100**	Carbon Resistor (chip)	100 1/16W J				01
	R0901	**RD357470**	Carbon Resistor (chip)	47K 1/16W J				01
	R0905	**RD350000**	Carbon Resistor (chip)	0 1/16W J				01
	R0906	**RD350000**	Carbon Resistor (chip)	0 1/16W J				01
	RA831	**RE045100**	Resistor Array	100x4				01
	RA832	**RE045100**	Resistor Array	100x4				01

*: New Parts

RANK: Japan only

Downloaded from www.Manualslib.com manuals search engine

DMLCD and PNAM

REF NO.	PART NO.	DESCRIPTION		REMARKS	QTY	RANK
RA833	**RE046100**	Resistor Array	1Kx4			01
-835	**RE046100**	Resistor Array	1Kx4			01
RA836	**RE047100**	Resistor Array	10Kx4			01
-838	**RE047100**	Resistor Array	10Kx4			01
TH701	**V9140600**	Thermistor (chip)	ERTJ1VT152J 1.5K			
X0301	**WE194400**	Quartz Crystal Unit	16.9344M HC-49S-SM			01
	WE005400	Circuit Board	PNAM	1/3,2/3,3/3 (X5911C0)		10
	WE774300	Bind Head Tapping Screw-B	3x8 MFZN2W3		3	01
	--	Jumper Wire	0.55 TIN	(VA07890)		
	--	Silicone Grease	G-746	(0412125)		
	--	Silicone Grease	X-113A G746	(VA79810)		
C0103	**VM902400**	Semiconductor Ceramic Cap.	0.1uF 25V Z			01
C0104	**V3510100**	Electrolytic Cap.	1000uF 25V			
C0104	**UR849100**	Electrolytic Cap.	1000uF 25V			01
C0105	**VM902400**	Semiconductor Ceramic Cap.	0.1uF 25V Z			01
C0106	**VM902400**	Semiconductor Ceramic Cap.	0.1uF 25V Z			01
C0107	**UR828220**	Electrolytic Cap.	220uF 10V			01
C0107	**V3507400**	Electrolytic Cap.	220uF 10V			01
C0401	**VM902400**	Semiconductor Ceramic Cap.	0.1uF 25V Z			01
C0403	**UR866100**	Electrolytic Cap.	1.0uF 50V			01
C0403	**V3511900**	Electrolytic Cap.	1uF 50V			
C0404	**UR866100**	Electrolytic Cap.	1.0uF 50V			01
C0404	**V3511900**	Electrolytic Cap.	1uF 50V			
C0407	**UR866100**	Electrolytic Cap.	1.0uF 50V			01
C0407	**V3511900**	Electrolytic Cap.	1uF 50V			
C0408	**UR866100**	Electrolytic Cap.	1.0uF 50V			01
C0408	**V3511900**	Electrolytic Cap.	1uF 50V			
C0409	**FG612470**	Ceramic Capacitor-B	470pF 50V K			01
C0409	**VR025800**	Ceramic Capacitor-2B	470pF 63V K			
C0410	**FG612470**	Ceramic Capacitor-B	470pF 50V K			01
C0410	**VR025800**	Ceramic Capacitor-2B	470pF 63V K			
C0411	**UR837470**	Electrolytic Cap.	47uF 16V			01
C0411	**V3508400**	Electrolytic Cap.	47uF 16V			
C0412	**UR837470**	Electrolytic Cap.	47uF 16V			01
C0412	**V3508400**	Electrolytic Cap.	47uF 16V			
C0413	**UR838100**	Electrolytic Cap.	100uF 16V			01
C0413	**V3508500**	Electrolytic Cap.	100uF 16V			
C0414	**UR838100**	Electrolytic Cap.	100uF 16V			01
C0414	**V3508500**	Electrolytic Cap.	100uF 16V			
C0415	**UR838100**	Electrolytic Cap.	100uF 16V			01
C0415	**V3508500**	Electrolytic Cap.	100uF 16V			
C0416	**UA355150**	Mylar Capacitor	0.15uF 50V J			
C0416	**UA655150**	Mylar Capacitor	0.15uF 50V J			01
C0416	**V5515600**	Mylar Capacitor	0.15uF 50V J			
C0416	**VS886900**	Mylar Capacitor	0.15uF 100V K			
C0416	**VR168500**	Monolithic Mylar Capacitor	0.15uF 50V			01
C0417	**UA355150**	Mylar Capacitor	0.15uF 50V J			
C0417	**UA655150**	Mylar Capacitor	0.15uF 50V J			01
C0417	**V5515600**	Mylar Capacitor	0.15uF 50V J			
C0417	**VS886900**	Mylar Capacitor	0.15uF 100V K			
C0417	**VR168500**	Monolithic Mylar Capacitor	0.15uF 50V			01
C0418	**UR838470**	Electrolytic Cap.	470uF 16V			01
C0418	**V3508800**	Electrolytic Cap.	470uF 16V			01
C0419	**UR838470**	Electrolytic Cap.	470uF 16V			01
C0419	**V3508800**	Electrolytic Cap.	470uF 16V			01
C0422	**UR837470**	Electrolytic Cap.	47uF 16V			01
C0422	**V3508400**	Electrolytic Cap.	47uF 16V			
C0423	**UR837470**	Electrolytic Cap.	47uF 16V			01
C0423	**V3508400**	Electrolytic Cap.	47uF 16V			
C0601	**VM902400**	Semiconductor Ceramic Cap.	0.1uF 25V Z			01
C0602	**FG644100**	Ceramic Capacitor-F	0.01uF 50V Z			01
C0602	**VQ175700**	Ceramic Capacitor-2	0.01uF 63V Z			
C0603	**VM902400**	Semiconductor Ceramic Cap.	0.1uF 25V Z			01
C0604	**FG652100**	Ceramic Capacitor-SL	100pF 50V J			01
C0604	**VR025000**	Ceramic Capacitor-2B	100pF 63V K			
C0604	**VR028200**	Ceramic Capacitor-SL	100pF 63V J			
CN101	**LB918030**	Base Post Connector	XH 3P TE			01
CN102	**VK024600**	Wire Trap	52147 2P TE			01
CN103	**VI878900**	Cable Holder	51048 11P TE			01

*: New Parts

RANK: Japan only

Downloaded from www.Manualslib.com manuals search engine

PNAM

REF NO.	PART NO.	DESCRIPTION			REMARKS	QTY	RANK
CN103	**VY668800**	Cable Holder	51048 11P TE				
CN401	**VI878300**	Cable Holder	51048 5P TE				01
CN401	**VZ341700**	Cable Holder	51048 5P TE				
CN402	**VI878300**	Cable Holder	51048 5P TE				01
CN402	**VZ341700**	Cable Holder	51048 5P TE				
CN403	**VI878000**	Cable Holder	51048 2P TE				01
CN403	**VY668300**	Cable Holder	51048 2P TE				
CN404	**VI878000**	Cable Holder	51048 2P TE				01
CN404	**VY668300**	Cable Holder	51048 2P TE				
CN501	**VI879400**	Cable Holder	51048 16P TE				01
CN501	**VY669100**	Cable Holder	51048 16P TE				
CN502	**VI878800**	Cable Holder	51048 10P TE				01
CN502	**VY668700**	Cable Holder	51048 10P TE				
CN503	**VI878800**	Cable Holder	51048 10P TE				01
CN503	**VY668700**	Cable Holder	51048 10P TE				
CN601	**VI878700**	Cable Holder	51048 9P TE				01
CN601	**VZ341900**	Cable Holder	51048 9P TE				
D0101	**V8603100**	Diode	2A02GM				
D0101	**VV731400**	Diode	2A02M FORMING				01
D0104	**VB941200**	Diode	1SS133,1SS176 TE				01
D0104	**VV437800**	Diode	1N4148(DO-34)				01
D0105	**VB941200**	Diode	1SS133,1SS176 TE				01
D0105	**VV437800**	Diode	1N4148(DO-34)				01
D0501	**VB941200**	Diode	1SS133,1SS176 TE				01
D0501	**VV437800**	Diode	1N4148(DO-34)				01
D0502	**VB941200**	Diode	1SS133,1SS176 TE				01
D0502	**VV437800**	Diode	1N4148(DO-34)				01
D0503	**VB941200**	Diode	1SS133,1SS176 TE				01
D0503	**VV437800**	Diode	1N4148(DO-34)				01
D0504	**VB941200**	Diode	1SS133,1SS176 TE				01
D0504	**VV437800**	Diode	1N4148(DO-34)				01
D0505	**VB941200**	Diode	1SS133,1SS176 TE				01
D0505	**VV437800**	Diode	1N4148(DO-34)				01
D0506	**VB941200**	Diode	1SS133,1SS176 TE				01
D0506	**VV437800**	Diode	1N4148(DO-34)				01
D0507	**VB941200**	Diode	1SS133,1SS176 TE				01
D0507	**VV437800**	Diode	1N4148(DO-34)				01
D0508	**VB941200**	Diode	1SS133,1SS176 TE				01
D0508	**VV437800**	Diode	1N4148(DO-34)				01
D0601	**VB941200**	Diode	1SS133,1SS176 TE				01
D0601	**VV437800**	Diode	1N4148(DO-34)				01
IC101	**X5887A00**	IC	BA50BC0T +5V 1.0A		REGULATOR		03
IC401	**XV771A00**	IC	BA5417		POWER AMP 2.5Wx2		03
IC601	**WA645200**	Photo Coupler	PC900V0NSZX				04
J0102	**VA078900**	Jumper Wire	0.55 TIN				
JK101	**LB302260**	Connector	HEC0470-01-630		DC IN 12V		02
JK101	**V6557600**	Connector	HTJ-020-05AZ				04
JK401	**LB101870**	Phone Jack	JACK YKB21-5006		PHONES/OUTPUT		03
JK401	**VV943300**	Phone Jack	HTJ064-04A				02
JK601	**VJ107200**	DIN Connector	JACK5P YKF51-5050N		MIDI IN		01
JK601	**VZ085800**	DIN Connector	5P HDC-052S-01				01
JK602	**VJ107200**	DIN Connector	JACK5P YKF51-5050N		MIDI OUT		01
JK602	**VZ085800**	DIN Connector	5P HDC-052S-01				01
JK603	**VC687500**	Phone Jack black	JACK YKB21-5014		SUSTAIN		01
JK603	**WE245200**	Phone Jack black	JY-6314-01-020				
K0401	**--**	Heat Sink Assembly	#2685		(V561400)		
L0601	**V7634400**	Coil 20uH	BD-FL20-03				
L0601	**VB835000**	Coil	20uH				01
L0601	**VT279200**	Coil 20uH	20uH FL5R200QN				
R0101	**V2548300**	Carbon Resistor	180 1/6W J				
R0101	**HF455180**	Carbon Resistor	180 1/6W J				
R0102	**V2548300**	Carbon Resistor	180 1/6W J				
R0102	**HF455180**	Carbon Resistor	180 1/6W J				
R0104	**V2551200**	Carbon Resistor	47K 1/6W J				
R0104	**HF457470**	Carbon Resistor	47K 1/6W J				
R0105	**V2549800**	Carbon Resistor	3.3K 1/6W J				
R0105	**HF456330**	Carbon Resistor	3.3K 1/6W J				
R0107	**V2550400**	Carbon Resistor	10K 1/6W J				
R0107	**HF457100**	Carbon Resistor	10K 1/6W J				
R0108	**V2550800**	Carbon Resistor	22K 1/6W J				

*: New Parts

RANK: Japan only

Downloaded from www.Manualslib.com manuals search engine

PNAM and 61H and 61L

REF NO.	PART NO.	DESCRIPTION		REMARKS	QTY	RANK
R0108	**HF457220**	Carbon Resistor	22K 1/6W J			
R0109	**V2550500**	Carbon Resistor	12K 1/6W J			
R0109	**HF457120**	Carbon Resistor	12K 1/6W J			
R0401	**V2550400**	Carbon Resistor	10K 1/6W J			
-404	**V2550400**	Carbon Resistor	10K 1/6W J			
R0401	**HF457100**	Carbon Resistor	10K 1/6W J			
-404	**HF457100**	Carbon Resistor	10K 1/6W J			
R0405	**V2548800**	Carbon Resistor	470 1/6W J			
R0405	**HF455470**	Carbon Resistor	470 1/6W J			
R0406	**V2548800**	Carbon Resistor	470 1/6W J			
R0406	**HF455470**	Carbon Resistor	470 1/6W J			
R0407	**WD556700**	Flame Proof C. Resistor	2.2 1/4W J			01
R0408	**WD556700**	Flame Proof C. Resistor	2.2 1/4W J			01
R0409	**V2548600**	Carbon Resistor	330 1/6W J			
R0409	**HF455330**	Carbon Resistor	330 1/6W J			
R0410	**V2548600**	Carbon Resistor	330 1/6W J			
R0410	**HF455330**	Carbon Resistor	330 1/6W J			
R0411	**V2548000**	Carbon Resistor	100 1/6W J			
R0411	**HF455100**	Carbon Resistor	100 1/6W J			
R0412	**V2548000**	Carbon Resistor	100 1/6W J			
R0412	**HF455100**	Carbon Resistor	100 1/6W J			
R0601	**V2551200**	Carbon Resistor	47K 1/6W J			
R0601	**HF457470**	Carbon Resistor	47K 1/6W J			
R0602	**V2549200**	Carbon Resistor	1.0K 1/6W J			
R0602	**HF456100**	Carbon Resistor	1.0K 1/6W J			
R0603	**V2550400**	Carbon Resistor	10K 1/6W J			
R0603	**HF457100**	Carbon Resistor	10K 1/6W J			
R0604	**V2550600**	Carbon Resistor	15K 1/6W J			
R0604	**HF457150**	Carbon Resistor	15K 1/6W J			
R0605	**V2550000**	Carbon Resistor	4.7K 1/6W J			
R0605	**HF456470**	Carbon Resistor	4.7K 1/6W J			
R0606	**V2547600**	Carbon Resistor	47 1/6W J			
R0606	**HF454470**	Carbon Resistor	47 1/6W J			
R0607	**V2547600**	Carbon Resistor	47 1/6W J			
R0607	**HF454470**	Carbon Resistor	47 1/6W J			
R0608	**V2549200**	Carbon Resistor	1.0K 1/6W J			
R0608	**HF456100**	Carbon Resistor	1.0K 1/6W J			
R0609	**V2548400**	Carbon Resistor	220 1/6W J			
R0609	**HF455220**	Carbon Resistor	220 1/6W J			
TR101	**WD926900**	Transistor	2SB1342			02
TR102	**IC174070**	Transistor	2SC1740S R,S			01
TR601	**IC174070**	Transistor	2SC1740S R,S			01
TR602	**IC174070**	Transistor	2SC1740S R,S			01
VR401	**WC709800**	Rotary Variable Resistor	A 5.0K XV014111YG	MASTER VOLUME		02
WA103	--	Connector Assembly	AM	(WE13910)		
WA401	--	Connector Assembly	VOL	(WE13900)		
WA403	--	Connector Assembly	SPL	(WE14120)		
WA404	--	Connector Assembly	SPR	(WE14130)		
WA501	--	Cable	16P L=100	PN1 (WE14080)		
WA502	--	Connector Assembly	PN2	(WE13970)		
WA601	--	Cable	9P L=70	JACK (WE14060)		
	V8695500	Circuit Board	61H	(V869540)(X2335C0)		04
	--	Masking Tape	#2901W=15	(VQ76950)		
CN01	**VK025600**	Wire Trap	52147 12P TE			01
CN02	**VK024900**	Wire Trap	52147 5P TE			01
CN03	**VK025600**	Wire Trap	52147 12P TE			01
D073	**VB941200**	Diode	1SS133,1SS176 TE			01
-122	**VB941200**	Diode	1SS133,1SS176 TE			01
	V8695300	Circuit Board	61L	(V869520)(X2336B0)		04
	--	Masking Tape	#2901W=15	(VQ76950)		
CN04	**VK025600**	Wire Trap	52147 12P TE			01
CN05	**VK025100**	Wire Trap	52147 7P TE			01
D001	**VB941200**	Diode	1SS133,1SS176 TE			01
-072	**VB941200**	Diode	1SS133,1SS176 TE			01
20	**X6553A00**	Speaker	12cm 4ohm 3W		2	04
180	**WD570800**	LCD	TTR TYPE-05B			06

*: New Parts

RANK: Japan only

Downloaded from www.Manualslib.com manuals search engine

■ PSR-VN300 OVERALL CIRCUIT DIAGRAM

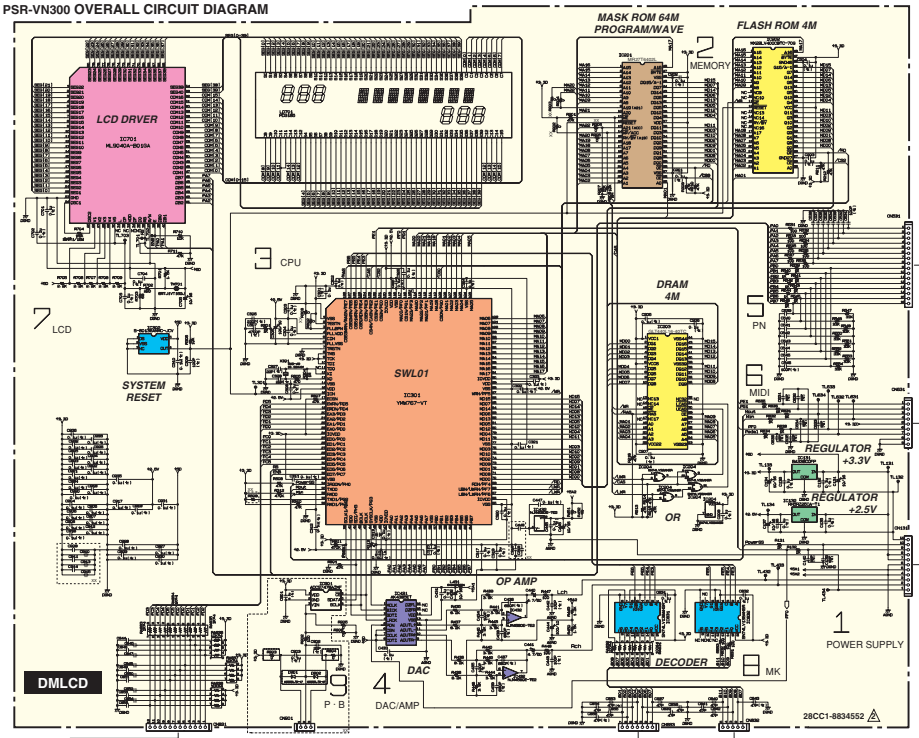

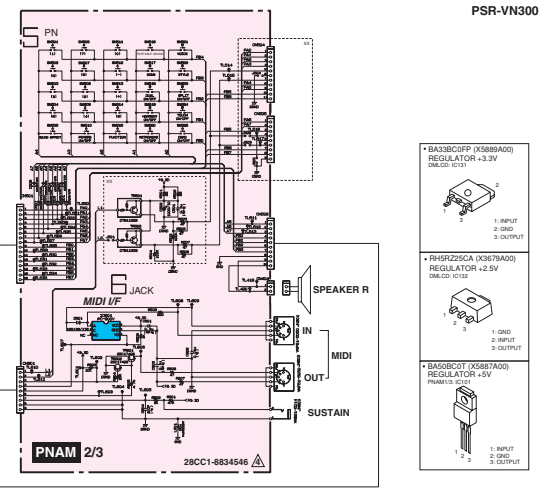

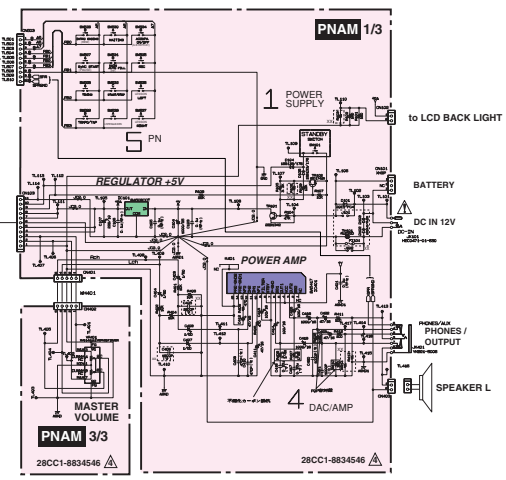

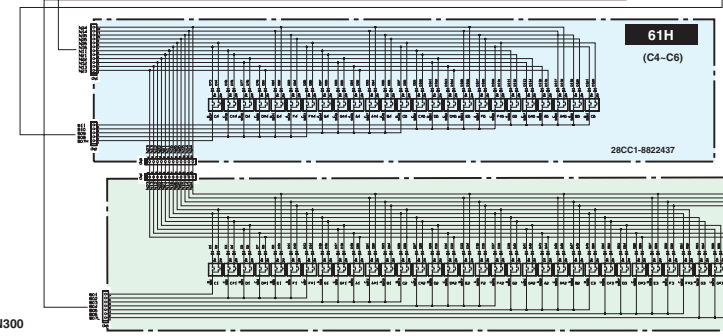

(セ) : Ceramic Capacitor
(マ) : Mylar Capacitor
(半セ): Semiconductive Ceramic Capacitor
金抵 : Metal Film Resistor
不燃化カーボン抵抗: Flame Proof C.Resistor
XX : Not installed

Note: See parts list for details of circuit board component parts.

■ WARNING
Components having special characteristics are marked ⚠ and must be replaced with parts having specifications equel to those originally installed.

Downloaded from www.Manualslib.com manuals search engine