PORTATONE

PSR-GR200

SERVICE MANUAL



■ **CONTENTS**

SPECIFICATIONS ····· **3**
BLOCK DIAGRAM ····· **4**
PANEL LAYOUT ····· **5**
CIRCUIT BOARD LAYOUT ····· **6**
DISASSEMBLY PROCEDURE ····· **7**
LSI PIN DESCRIPTION ····· **10**
IC BLOCK DIAGRAM ····· **11**
CIRCUIT BOARDS ····· **12**
TEST PROGRAM ····· **14**
MIDI DATA FORMAT ····· **15**
MIDI IMPLEMENTATION CHART ····· **17**
PARTS LIST
OVERALL CIRCUIT DIAGRAM

PK 001610

YAMAHA

HAMAMATSU, JAPAN

1.007K-434 **Printed in Japan '98.06**

IMPORTANT NOTICE

This manual has been provided for the use of authorized Yamaha Retailers and their service personnel. It has been assumed that basic service procedures inherent to the industry, and more specifically Yamaha Products, are already known and understood by the users, and have therefore not been restated.

WARNING: Failure to follow appropriate service and safety procedures when servicing this product may result in personal injury, destruction of expensive components and failure of the product to perform as specified. For these reasons, we advise all Yamaha product owners that all service required should be performed by an authorized Yamaha Retailer or the appointed service representative.

IMPORTANT: This presentation or sale of this manual to any individual or firm does not constitute authorization, certification, recognition of any applicable technical capabilities, or establish a principal-agent relationship of any form.

The data provided is belived to be accurate and applicable to the unit(s) indicated on the cover. The research engineering, and service departments of Yamaha are continually striving to improve Yamaha products. Modifications are, therefore, inevitable and changes in specification are subject to change without notice or obligation to retrofit. Should any discrepancy appear to exist, please contact the distributor's Service Division.

WARNING: Static discharges can destroy expensive components. Discharge any static electricity you body may have accumulated by grounding yourself to the ground buss in the unit (heavy gauge black wires connect to this buss.)

IMPORTANT: Turn the unit OFF during disassembly and parts replacement. Recheck all work before you apply power to the unit.

WARNING: CHEMICAL CONTENT NOTICE!

The solder used in the production of this product contains LEAD. In addition, other electrical/electronic and/or plastic (where applicable) components may also contain traces of chemicals found by the California Health and Welfare Agency (and possibly other entities) to cause cancer and/or birth defects or other reproductive harm.

DO NOT PLACE SOLDER, ELECTRICAL/ELECTRONIC OR PLASTIC COMPONENTS IN YOUR MOUTH FOR ANY REASON WHAT SO EVER!

Avoid prolonged, unprotected contact between solder and your skin! When soldering, do not inhale solder fumes or expose eyes to solder/flux vapor!

If you come in contact with solder or components located inside the enclosure of this product, wash your hands before handling food.

■ WARNING

Components having special characteristics are marked ⚠ and must be replaced with parts having specification equal to those originally installed.

SPECIFICATIONS

Keyboard
61 standard-size keys (C1 - C6)

Voices
104 panel voices (max. polyphony: 16)

Effects
Dual (Included in Voice),
Harmony/Echo (Included in Voice),
Split (Included in Voice)

Auto Accompaniment
100 styles

Fingering : Multi Fingering

Sections : Intro, Main A, B, Ending, Fill x 4

Overall controls
Tempo, Multi Pad, Transpose, Tuning, Accompaniment Volume, Song Volume, Metronome Volume

Style controls
Acmp On/Off, Sync-Start, Start, Stop, Intro/Ending, Main A, B (Auto Fill), OTS, Chord Guide

Song controls
Start, Stop, Pause, A↔B Repeat, Fast Forward, Rewind, Voice Change, Melody Guide

Portable Grand
Metronome

Panel controls
Overall (▲▼ , +,-), SONG, VOICE, STYLE, numeric keypad (0 - 9, +,-)

One Touch Setting
1/style

Multi Pads
2 pads x 20 banks

Yamaha Education Suite
Melody Guide (Waiting, Minus One), Chord Guide (Smart, Dictionary)

Preset songs
100 songs

Display
Large multi-function LCD display

Amplifier
2.0W + 2.0W

MIDI
IN/OUT

Auxiliary jacks
PHONES/AUX OUT, DC IN 10-12V, MIDI IN/OUT, SUSTAIN

Speakers
12cm x 2

Power supply
Adaptor : Yamaha PA-3B AC power adaptor
Batteries : Six “D” size, SUM-1, R-20 or equivalent batteries

Dimensions
931 x 351 x 110 mm
(36-2/3" x 13-3/4" x 4-1/3")

Weight
4.7kg (10 lbs., 6 oz.)

Supplied accessories
Music Stand, Owner’s Manual, Song Book

Optional accessories
Headphones : HPE-150
AC power adaptor : PA-3B
Footswitch : FC4, FC5
Keyboard stand : L-2L, L-2C

Output level
Refer to the TEST PROGRAM section of this manual on page 14.

■ BLOCK DIAGRAM

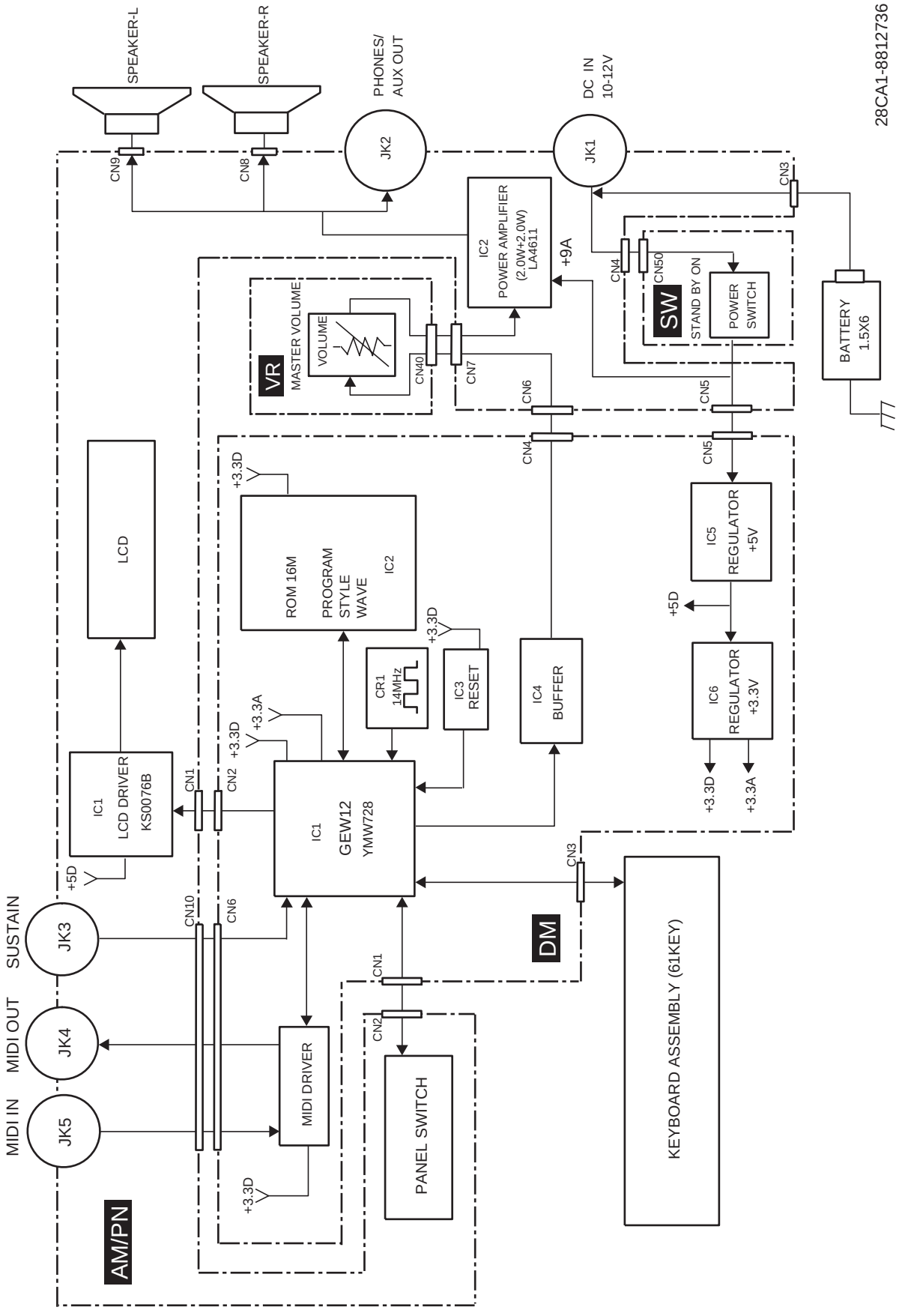

■ PANEL LAYOUT

• Top Panel

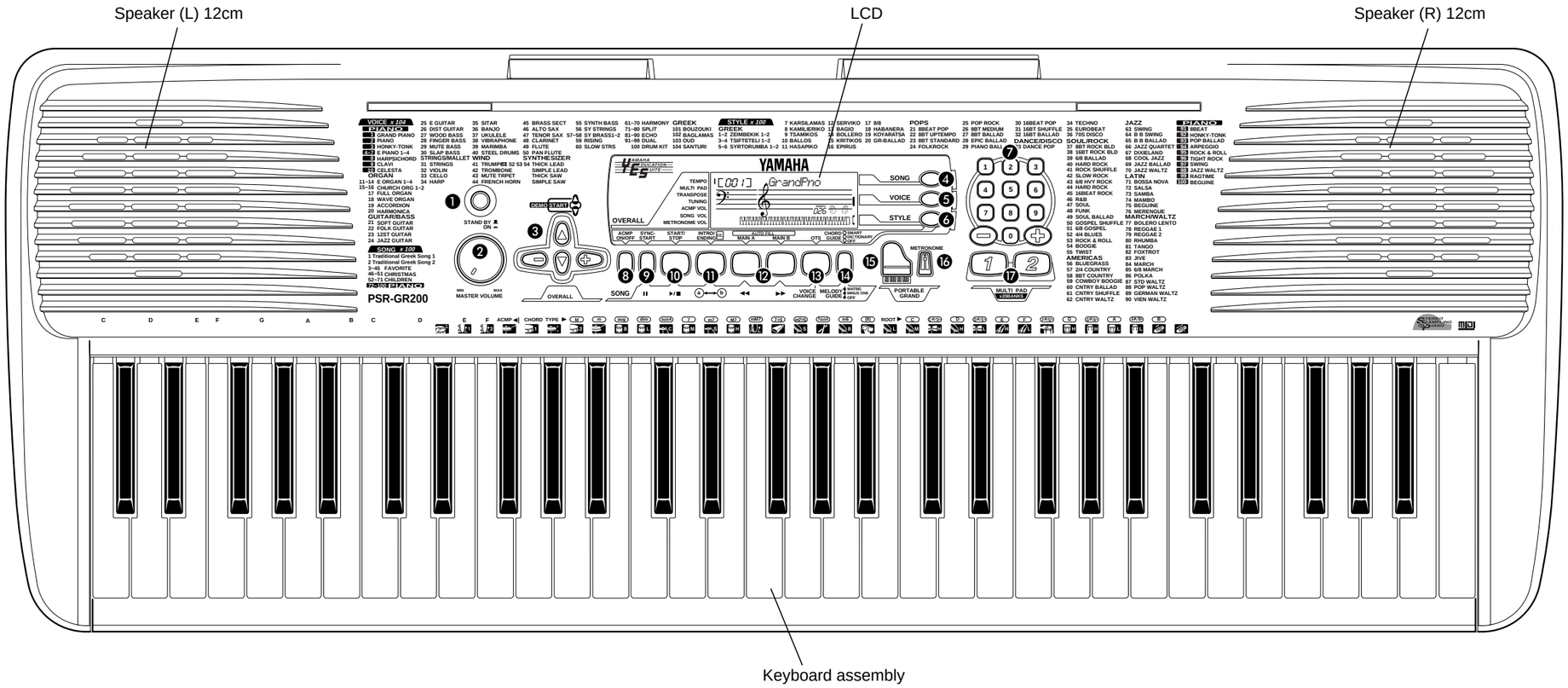

• Rear Panel



• Top Panel

❶ POWER switch (STAND BY/ON)
❷ MASTER VOLUME dial
❸ OVERALL, DEMO START (▲, ▼, +, -) buttons
❹ SONG button
❺ VOICE button
❻ STYLE button
❼ Numeric keypad, +/- buttons
❽ ACMP ON/OFF button
❾ SYNC-START, Pause (❚❚) button
❿ START/STOP (▶/■) button
⓫ INTRO/ENDING, ⓐ ⟷ ⓑ button
⓬ MAIN A/B (AUTO FILL), Fast Forward/Rewind buttons
⓭ OTS, VOICE CHANGE button
⓮ CHORD GUIDE, MELODY GUIDE button
⓯ PORTABLE GRAND button
⓰ METRONOME button
⓱ MULTI PAD buttons

• Rear Panel

⓲ DC IN 10-12V jack
⓳ PHONES/AUX OUT jack
⓴ SUSTAIN jack
㉑ MIDI IN, OUT terminals

■ CIRCUIT BOARD LAYOUT

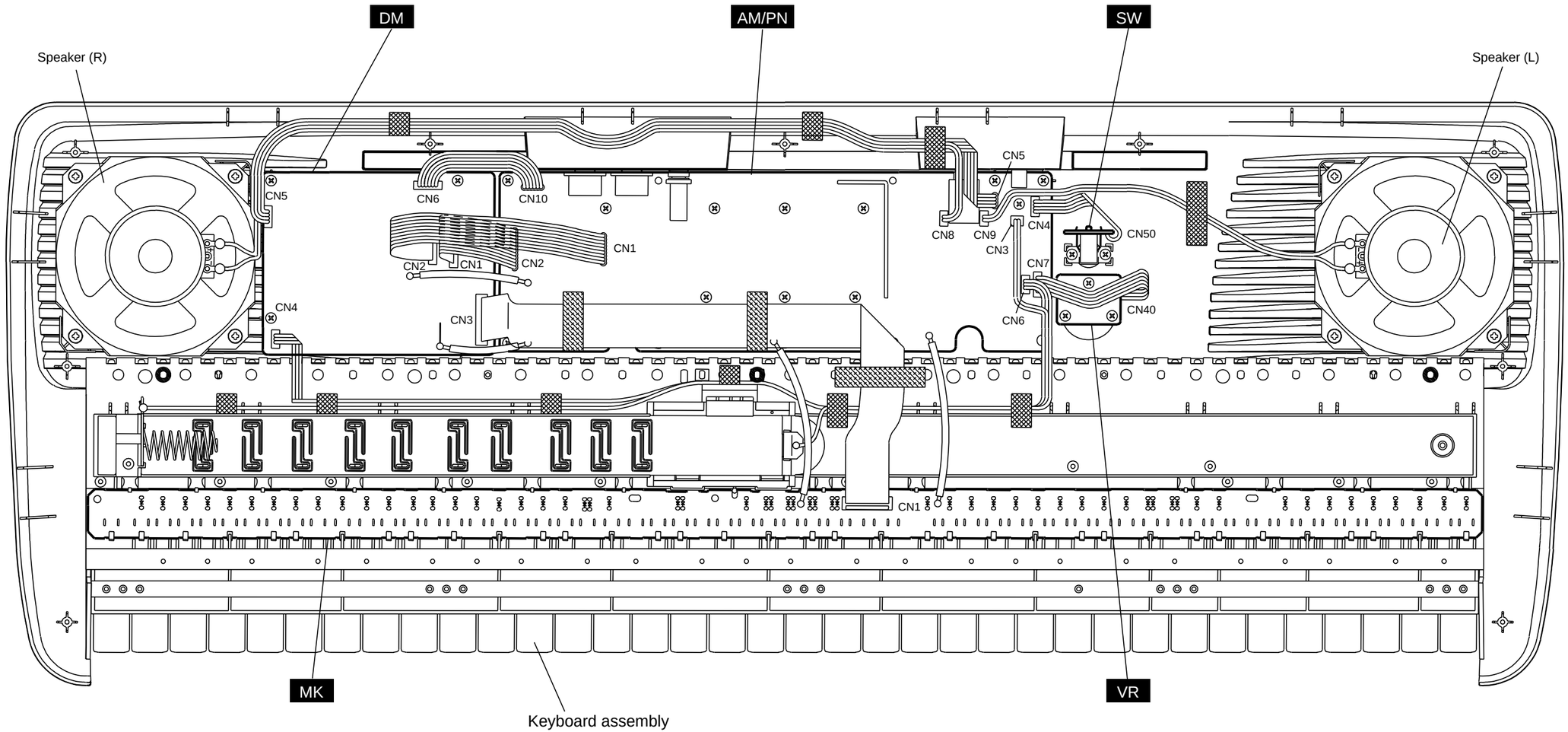

2NC-V211410 ⚠2

DESTINATION		CONNECTOR ASSEMBLY	PART NO.	PIN/LENGTH	AVAILABILITY	REMARKS
DM-CN1	AM/PN-CN2	PN	V213900	12P/L100	X	AM/PN-W004
DM-CN2	AM/PN-CN1	LCD	V214110	9P/L160	X	AM/PN-W003
DM-CN3	MK-CN1	MK	V213910	15P/L510	X	P3-330
DM-CN4	AM/PN-CN6	AG-OUT	V213730	3P/L620	X	P3-350
DM-CN5	AM/PN-CN5	PS	V213740	4P/L540	X	AM/PN-W002
DM-CN6	AM/PN-CN10	MIDI	V213770	6P/L130	X	AM/PN-W001
AM/PN-CN3	BATTERY	BATTERY	V214340	2P/RE250/BL650	X	P3-250
AM/PN-CN4	SW-CN50	SW	V214080	4P/L120	X	VR/SW-W002
AM/PN-CN7	VR-CN40	VR	V214090	5P/L100	X	VR/SW-W001
AM/PN-CN8	SPEAKER (R)	SP-R	V214300	2P/L570	X	P3-270
AM/PN-CN9	SPEAKER (L)	SP-L	V214290	2P/L270	X	P3-260

■ DISASSEMBLY PROCEDURE

1 Lower Case Assembly

1-1 Remove the battery cover assembly. (Fig. 1)
1-2 Remove the fourteen (14) screws marked [230] and the two (2) screws marked [240A]. The lower case assembly can then be removed. (Fig. 1)

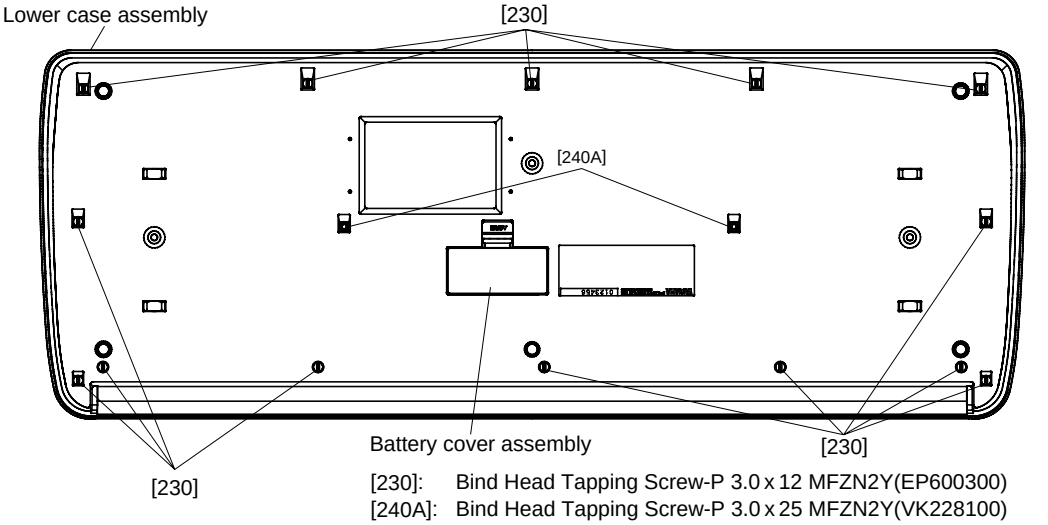

[230]: Bind Head Tapping Screw-P 3.0 x 12 MFZN2Y(EP600300)
[240A]: Bind Head Tapping Screw-P 3.0 x 25 MFZN2Y(VK228100)
(Fig. 1)

2 DM Circuit Board

2-1 Remove the lower case assembly. (see procedure 1)
2-2 Remove the four (4) screws marked [220A]. The DM circuit board can then be removed. (Fig. 2)

3 AM/PN Circuit Board and LCD

3-1 Remove the lower case assembly. (see procedure 1)
3-2 Remove the fifteen (15) screws marked [220B]. The AM/PN circuit board can then be removed. (Fig. 2)
3-3 Remove the two rubber contacts not to touch the conductive surface, and remove the LCD. (Fig. 3)

4 VR Circuit Board

4-1 Remove the volume knob.(Fig. 4)
4-2 Remove the lower case assembly. (see procedure 1)
4-3 Remove the three (3) screws marked [220C]. The VR circuit board can then be removed. (Fig. 2)

5 SW Circuit Board

5-1 Remove the lower case assembly. (see procedure 1)
5-2 Remove the two (2) screws marked [220D]. The SW circuit board can then be removed. (Fig. 2)
5-3 Remove the push knob from the SW circuit board.

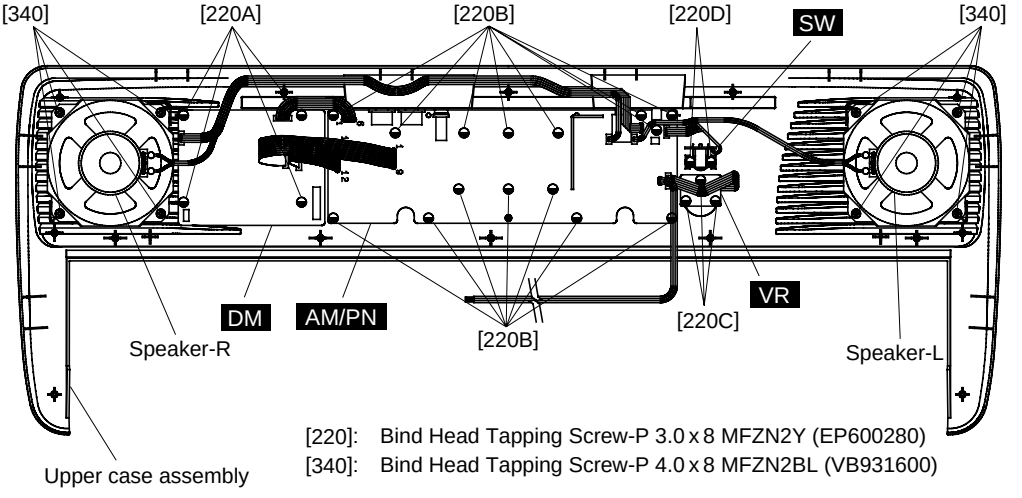

[220]: Bind Head Tapping Screw-P 3.0 x 8 MFZN2Y (EP600280)
[340]: Bind Head Tapping Screw-P 4.0 x 8 MFZN2BL (VB931600)

(Fig. 2)

6 Speakers

6-1 Remove the lower case assembly. (see procedure 1)

6-2 Remove the four (4) screws marked [340]. The speaker can then be removed. (Fig. 2)
* The right and left speakers can be removed in the same manner.

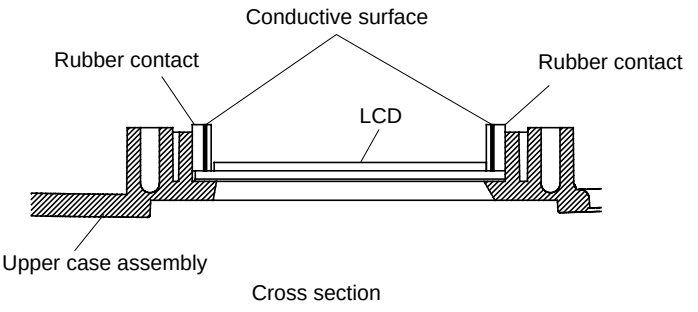

(Fig. 3)

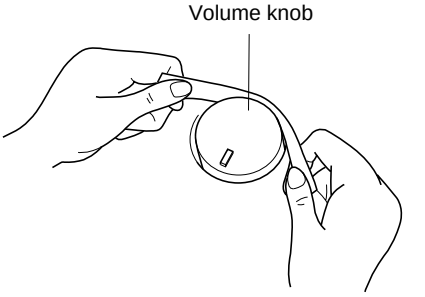

(Fig. 4)

7 Keyboard Assembly

7-1 Remove the lower case assembly. (see procedure 1)

7-2 Remove the three (3) screws marked [240B]. The keyboard assembly can then be removed. (Fig. 5)

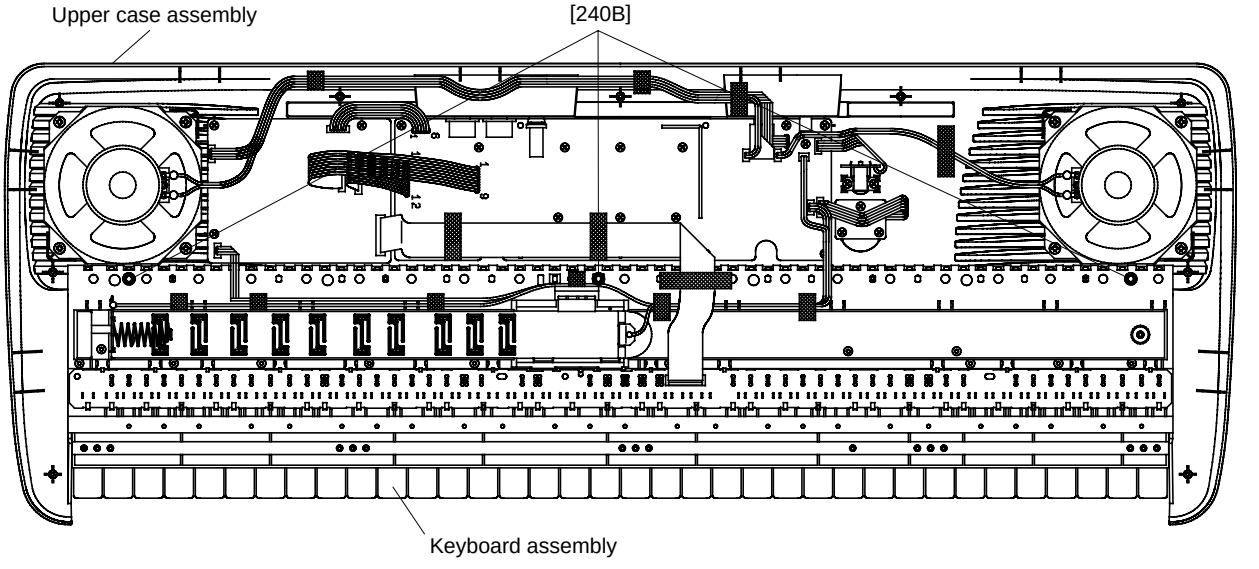

[240B]: Bind Head Tapping Screw-P 3.0 x 25 MFZN2Y (VK228100)

(Fig. 5)

8 Disassembling the keyboard assembly

8-1 Remove the keyboard assembly. (see procedure 7)
8-2 Remove the MK circuit board while pressing the hooks (A) inward, and then remove the rubber contact. (Fig. 6)
8-3 Remove the twenty-one (21) screws marked [11]. (Fig. 7)
8-4 Remove the black keys from the lower notes. Afterwards, remove the white keys DFA and C' and then remove the white keys CEGB from the higher notes. At this time, lift the keys from the front and slide then towards you. The keys can then be removed from the assembly. (Fig. 7)

9 Assembling the keyboard assembly

9-1 Install the white keys CEGB from the lower notes, and then DFA keys and C' key. Afterwards install the black keys from the higher notes, and tighten the twenty-one (21) screws marked [11]. (Fig. 7)
9-2 Install the rubber contacts in the assembly while pressing the keys as shown in Figure 8.
Check that the rubber contact has been firmly placed into position in the area indicated by the arrow in Figure 9.
When fitting the rubber contacts, raise both ends of the frame so that the keys don't push the rubber contact up.
9-3 Install the MK circuit board in the assembly so that the hooks (B) hold it as shown in Figure 10.

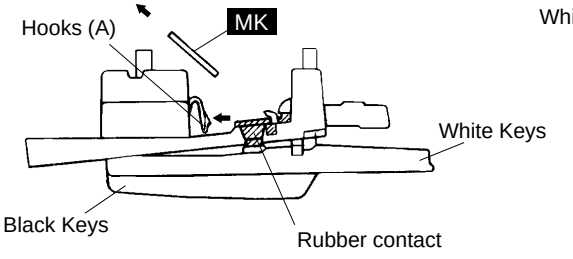

(Fig. 6)

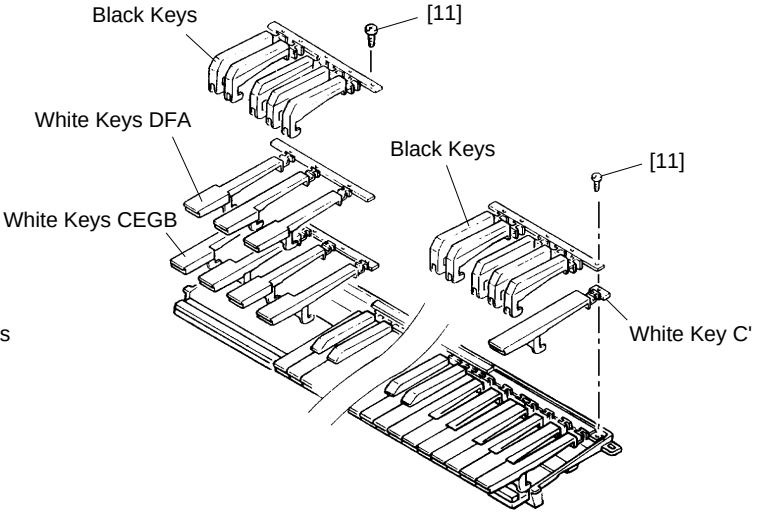

[11]: Bind Head Tapping Screw-P 3.0 x 16 MFZN2Y(EP600310)
[11]: Bind Head Tapping Screw-P 3.0 x 16 MFZN2B(VS756700)

(Fig. 7)

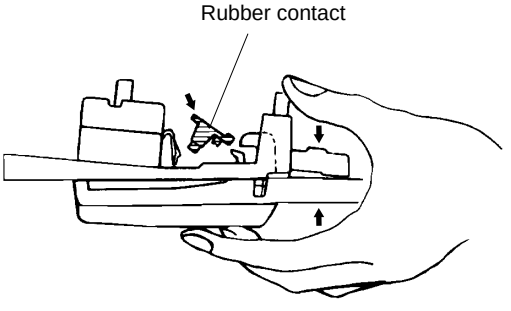

(Fig. 8)

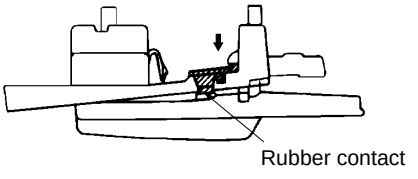

(Fig. 9)

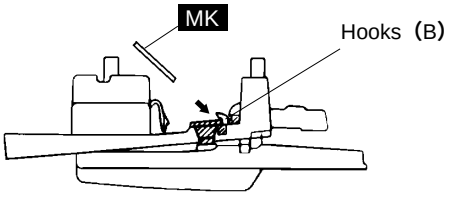

(Fig. 10)

■ LSI PIN DESCRIPTION

• **YMW728-F** (XU355A00) **GEW12** (AWM Tone Generator)

PIN NO.	NAME	I/O	FUNCTION	PIN NO.	NAME	I/O	FUNCTION
1	PL0	I/O	Port L	51	AVdd		Power supply
2	PL1	I/O		52	SYI	I	Synch. signal
3	PL2	I/O		53	ICN	I	Inicial Clear
4	PL3	I/O		54	Vss		Ground
5	PL4	I/O		55	MA19	O	Memory address bus
6	PL5	I/O		56	MA18	O	
7	PL6	I/O		57	MA8	O	
8	Vdd		Power supply	58	Vdd		Power supply
9	PA0	I/O	Port A	59	MA17	O	Memory address bus
10	PA1	I/O		60	MA9	O	
11	PA2	I/O		61	MA7	O	
12	PA3	I/O		62	MA10	O	
13	PA4	I/O		63	MA6	O	
14	PA5	I/O		64	MA11	O	
15	PB0	I/O	Port B	65	Vss		Ground
16	PB1	I/O		66	MA5	O	Memory address bus
17	PB2	I/O		67	MA12	O	
18	PB3	I/O		68	MA4	O	
19	PB4	I/O		69	MA13	O	
20	PB5	I/O		70	MA3	O	
21	Vss		Ground	71	MA14	O	
22	PC0	I/O	Port C	72	Vdd		Power supply
23	PC1	I/O		73	MA2	O	Memory address bus
24	PC2	I/O		74	MA15	O	
25	PC3	I/O		75	MA1	O	
26	PC4	I/O		76	MA16	O	
27	PC5	I/O		77	MA0	O	
28	PD0	I/O	Port D	78	MA20	O	
29	PD1	I/O		79	Vss		Ground
30	PD2	I/O		80	ROMLOEN	O	OEN pin
31	PD3	I/O		81	MD15	I/O	Memory data Input/output
32	PD4	I/O		82	MD0	I/O	
33	PD5	I/O		83	MD7	I/O	
34	Vdd		Power supply	84	MD8	I/O	
35	PE0	I/O	Port E	85	MD14	I/O	
36	PE1	I/O		86	MD1	I/O	
37	PE2	I/O		87	MD6	I/O	
38	PE3	I/O		88	MD9	I/O	
39	PE4	I/O		89	Vdd		Power supply
40	PE5	I/O		90	MD13	I/O	Memory data Input/output
41	TESTE	I	Test Mode E	91	MD2	I/O	
42	TESTD	I	Test Mode D	92	MD5	I/O	
43	Vss		Ground	93	MD10	I/O	
44	DACLMM	O	1 bit DAC Output L (-)	94	MD12	I/O	
45	DACLPP	O	1 bit DAC Output L (+)	95	MD3	I/O	
46	DACRPP	O	1 bit DAC Output R (+)	96	MD4	I/O	
47	DACRMM	O	1 bit DAC Output R (-)	97	MD11	I/O	
48	AVss		Ground	98	Vss		Ground
49	XO	O	Crystal quarts Output	99	MIDII	I	MIDI Input
50	XI	I	Crystal quarts Input	100	MIDIO	O	MIDI Output

- **KS0076BQ-00** (XR793A00) **LCD DRIVER**
- **KS0066U-10B** (XJ226A00) **LCD DRIVER**

PIN NO.	NAME	I/O	FUNCTION	PIN NO.	NAME	I/O	FUNCTION
1	S22	O	Segment signal output for LCD driving	41	DB2	I/O	Data interface
2	S21	O		42	DB3	I/O	
3	S20	O		43	DB4	I/O	
4	S19	O		44	DB5	I/O	
5	S18	O		45	DB6	I/O	
6	S17	O		46	DB7	I/O	
7	S16	O		47	C1	O	Common signal output for LCD driving
8	S15	O		48	C2	O	
9	S14	O		49	C3	O	
10	S13	O		50	C4	O	
11	S12	O		51	C5	O	
12	S11	O		52	C6	O	
13	S10	O		53	C7	O	
14	S9	O		54	C8	O	
15	S8	O		55	C9	O	
16	S7	O		56	C10	O	
17	S6	O		57	C11	O	
18	S5	O		58	C12	O	
19	S4	O		59	C13	O	
20	S3	O		60	C14	O	
21	S2	O		61	C15	O	
22	S1	O		62	C16	O	
23	Vss		Ground	63	S40	O	Segment signal output for LCD driving
24	OSC1	I	Oscillator	64	S39	O	
25	OSC2	O	Oscillator	65	S38	O	
26	V1		Power supply	66	S37	O	
27	V2			67	S36	O	
28	V3			68	S35	O	
29	V4			69	S34	O	
30	V5			70	S33	O	
31	CLK1	O	Data latch clock	71	S32	O	
32	CLK2	O	Data shift clock	72	S31	O	
33	Vdd		Power supply (+5 V)	73	S30	O	
34	M	O	Altamated signal for LCD driver outout	74	S29	O	
35	D	O	Display data interface	75	S28	O	
36	RS	I		76	S27	O	
37	R/W	I	Read/write	77	S26	O	
38	E	I	Enable	78	S25	O	
39	DB0	I/O	Data interface	79	S24	O	
40	DB1	I/O	Data interface	80	S23	O	

■ IC BLOCK DIAGRAM

- μ**PC4570HA**(XB247A00)
  Dual Operational Amplifier

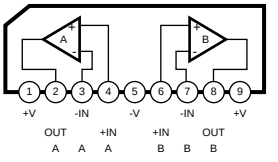

■ CIRCUIT BOARDS

• DM Circuit Board

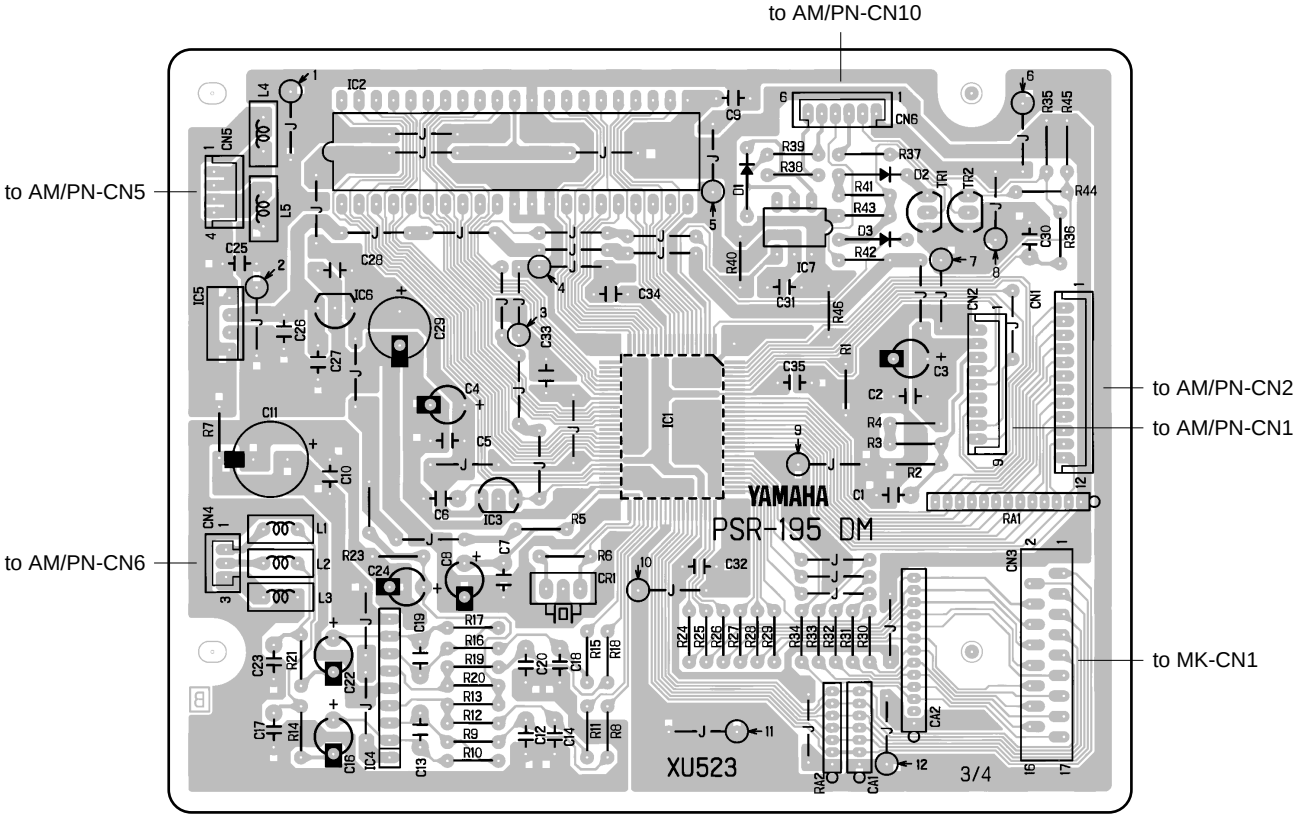

Component side

• IC1 installation

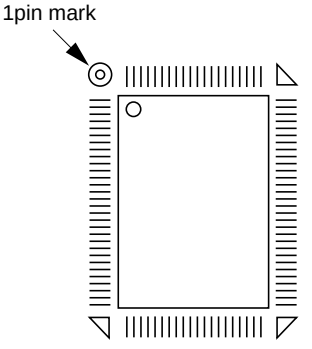

• IC5 installation

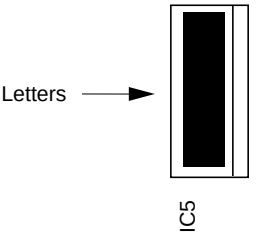

• CR1 installation

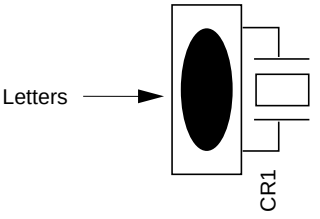

Note: See parts list for details of circuit board component parts.

DM : 2NA-V212850 ⚠0

• AM/PN Circuit Board

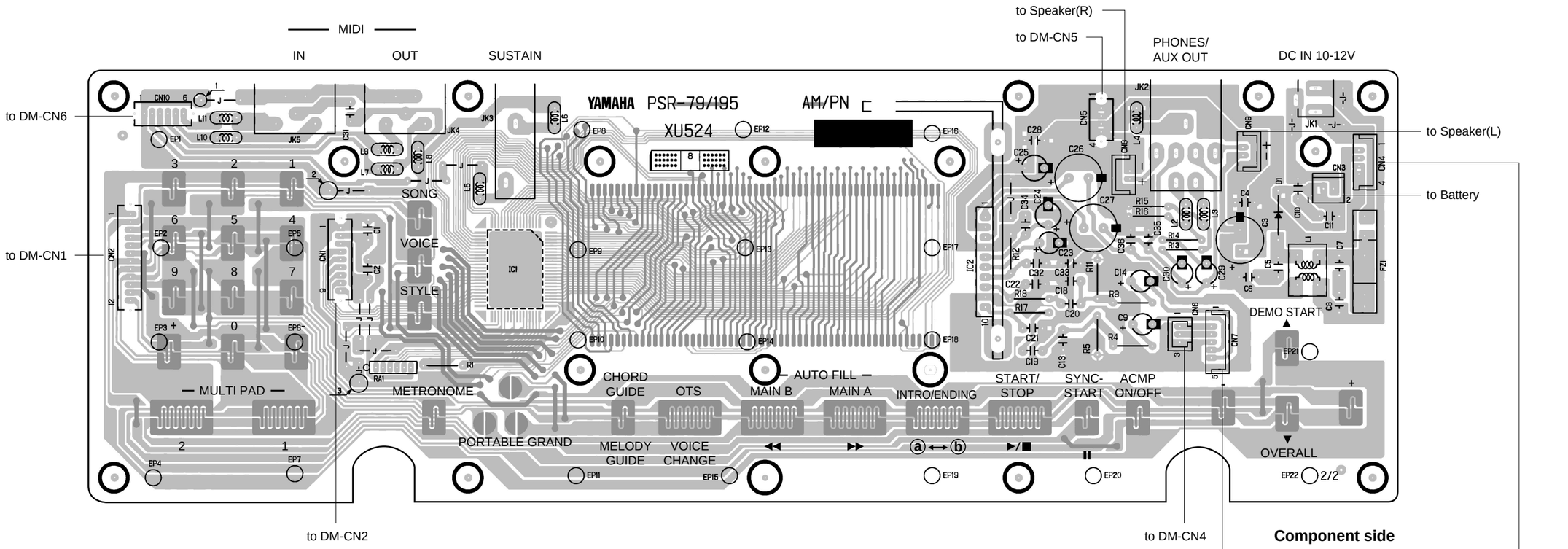

• IC1 installation

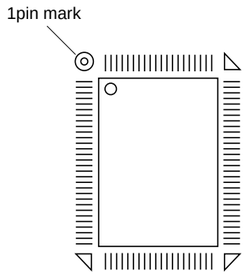

• VR Circuit Board

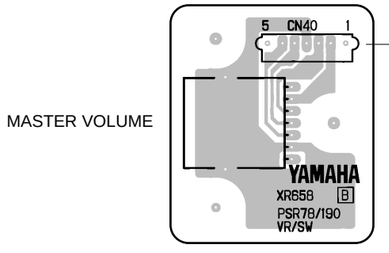

• SW Circuit Board

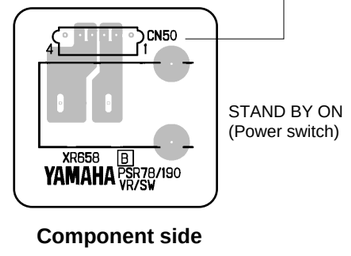

AM/PN : 2NA-V215020⚠3
VR,SW : 2NA-VU53410

Note: See parts list for details of circuit board component parts.

■ TEST PROGRAM

1. PREPARATION

To check the unit using the test program, the following measuring instruments and jigs will be required:
Level meter (with a JIS-C filter), Frequency counter, MIDI cable, Foot controller (FC4 or FC5)
Notes: Impedance must be 1M ohm above.
Use stereo plugs, and connect 33 ohm load at [PHONES/AUX OUT] jack.

2. HOW TO ENTER THE TEST PROGRAM

While pressing the C#2, F2 and G#2 keys, turn the [STAND BY/ON] switch on.

3. PROCEEDING THROUGH THE TEST PROGRAM

- The LCD will display "TEST" when entering the test program.
- To select the program number, use the[OVERALL ↑/↓] button.
- To execute the test, press the [START/STOP] button.
- The LCD will display "OK" when the test result is OK.
- The LCD will display "NG" when the test result is NG.
- To proceed to the next test, press the [START/STOP] button again.

4. TEST ITEMS

TEST NO.	LCD display (Initial)	Test Functions and Judgment criteria
1	001: Version	Displays version for ROM (PROGRAM).
2	002: Rom Chk1	Checks the PROGRAM ROM which is connected to CPU.
3	003: Ram Chk1	Checks the RAM. (GEW12).
11	011: TG1 Chk	Outputs the sine wave by changing the channels in sequence from C2 to D#3. When the [VOICE] switch is pressed, the tone of the voice will change. After autoscaling is finished, individual keys can be played. (If playing two or more keys simultaneously, the first pressed key has priority to make sound.)
13	013: Pit Chk	Connect the frequency counter to the [PHONES/AUX OUT] jack. Check that the 440.0 +/-1.76 Hz signal is output.
		Connect the level meter to the [PHONES/AUX OUT] jack. (33 ohm load) Check output level (1 kHz) at this time. PHONES L/R : -20 dBm +/-2 dB
14	014: Output R	Connect the level meter to the [PHONES/AUX OUT] jack. (33 ohm load) Set the [MASTER VOLUME] control at maximum. Check output level (1 kHz). PHONES L: Less than -60 dBm PHONES R: -17 dBm +/-2 dB
15	015: Output L	Connect the level meter to the [PHONES/AUX OUT] jack. (33 ohm load) Set the [MASTER VOLUME] control at maximum. Check output level (1 kHz). PHONES L: -17 dBm +/-2 dB PHONES R: Less than -60 dBm
19	019: Noise	Connect the level meter to the [PHONES/AUX OUT] jack. (33 ohm load) Set the [MASTER VOLUME] control at maximum. Check D/A converter noise. PHONES L/R: Less than -76.0 dBm
20	020: SW Chk	Checks switches on the panel. Press the switch which is displayed on the LCD. A pre-assigned note is output while pressing the switch. (See Table 1.) The LCD displays OK.
28	028: LCD On	Check that all LCD dots are on. The LCD becomes black.
29	029: LCD Off	Check that all LCD dots are off. The LCD becomes white.
31	031: PD1 Chk	Connect the foot controller to the [SASTAIN] jack. Check that C3 note is output while pressing the pedal and C4 is output while releasing the pedal, and the LCD displays OK.
37	037: MIDI Chk	After connecting the [MIDI IN] and [MIDI OUT] terminals with a MIDI cable, execute the test. Check that C4 note is output and the test result appears on the LCD.
41	041: Rom Chk2	For factory test use only.
42	042: Ram Chk2	For factory test use only.
48	048: Exit	Exit from the test program while executing this test.

Note: 0 dBm =0.775 V

(TABLE 1)

ORDER	SWITCH	NOTE	ORDER	SWITCH	NOTE
01	OVERALL -	C3	17	STYLE	E4
02	OVERALL ↑	C#3	18	1 (Ten key)	F4
03	OVERALL ↓	D3	19	2	F#4
04	OVERALL +	D#3	20	3	G4
05	ACMP ON/OFF	E3	21	4	G#4
06	SYNC-START	F3	22	5	A4
07	START/STOP	F#3	23	6	A#4
08	INTRO/ENDING	G3	24	7	B4
09	MAIN A	G#3	25	8	C5
10	MAIN B	A3	26	9	C#5
11	OTS	A#3	27	-	D5
12	CHORD GUIDE	B3	28	0	D#5
13	PORTABLE GRAND	C4	29	+	E5
14	METRONOME	C#4	30	1 (MULTI PAD)	F5
15	SONG	D4	31	2	F#5
16	VOICE	D#4			

MIDI DATA FORMAT

The following voices can be selected when the Voice mode is active, or when the Voice Change function is on. They can also be selected by a connected MIDI device; the corresponding bank select messages are: MSB = 00H, LSB = 70H.

When selecting voices via MIDI:
* The Harmony voices (#61 - #70) and Echo voices (#81 - #90) are sounded without the respective harmony and echo effects.

Panel #	Prg. Ch. #	Panel Name	Used Notes
1	0	GRAND PIANO	2
2	1	PIANO	1
3	2	HONKY-TONK	2
4	3	E PIANO 1	2
5	4	E PIANO 2	2
6	5	E PIANO 3	1
7	6	E PIANO 4	1
8	7	HARPSICHORD	2
9	8	CLAVI	1
10	9	CELESTA	1
11	10	E ORGAN 1	2
12	11	E ORGAN 2	2
13	12	E ORGAN 3	1
14	13	E ORGAN 4	1
15	14	CHURCH ORG 1	2
16	15	CHURCH ORG 2	2
17	16	FULL ORGAN	2
18	17	WAVE ORGAN	2
19	18	ACCORDION	2
20	19	HARMONICA	1
21	20	SOFT GUITAR	1
22	21	FOLK GUITAR	1
23	22	12ST GUITAR	2
24	23	JAZZ GUITAR	1
25	24	E GUITAR	2
26	25	DIST GUITAR	2
27	26	WOOD BASS	1
28	27	FINGER BASS	1
29	28	MUTE BASS	1
30	29	SLAP BASS	1
31	30	STRINGS	1
32	31	VIOLIN	1
33	32	CELLO	1
34	33	HARP	1
35	34	SITAR	1
36	35	BANJO	1
37	36	UKULELE	1
38	37	VIBRAPHONE	1
39	38	MARIMBA	1
40	39	STEEL DRUMS	1
41	40	TRUMPET	1
42	41	TROMBONE	1
43	42	MUTE TRPET	1
44	43	FRENCH HORN	1
45	44	BRASS SECT	1
46	45	ALTO SAX	1
47	46	TENOR SAX	1
48	47	CLARINET	1
49	48	FLUTE	1
50	49	PAN FLUTE	1
51	50	THICK LEAD	2
52	51	SIMPLE LEAD	1

Panel #	Prg. Ch. #	Panel Name	Used Notes
53	52	THICK SAW	2
54	53	SIMPLE SAW	1
55	54	SYNTH BASS	1
56	55	SY STRINGS	1
57	56	SY BRASS 1	2
58	57	SY BRASS 2	1
59	58	RISING	1
60	59	SLOW STRS	1
61	60	PIANO TRIO	3
62	61	PNO COUNTRY	2
63	62	E PNO TRIO	3
64	63	HARPSI TRIO	3
65	64	E ORG TRIO	3
66	65	VIBES DUET	2
67	66	TRP DUET	2
68	67	HORN DUET	2
69	68	CLARINET TR	3
70	69	FLUTE DUET	2
71	70	WD BASS/PNO	1
72	71	STRINGS/PNO	1
73	72	FN BA/E PNO	1
74	73	SL BA/CLAVI	1
75	74	FN BA/E ORG	1
76	75	FN BA/FK GT	1
77	76	HARP/VIOLIN	1
78	77	HORN/TRP	1
79	78	SY B/BRS SEC	1
80	79	PIANO/FLUTE	1
81	80	PIANO	1
82	81	E PIANO	1
83	82	HARPSICHORD	1
84	83	CELESTA	1
85	84	FOLK GUITAR	1
86	85	BANJO	1
87	86	VIBRAPHONE	1
88	87	MARIMBA	1
89	88	STEEL DRUMS	1
90	*1	DRUM KIT	1
91	90	PNO CONCE	2
92	91	E PNO CONCE	2
93	92	FAIRY LAND	2
94	93	MOOD GUITAR	2
95	94	RICH GUITAR	2
96	95	HOT ORGAN	2
97	96	EXCEL VIOLIN	2
98	97	CRYSTAL	2
99	98	STAR SHIP	2
100	*2	DRUM KIT	1
101	100	BOUZOUKI	1
102	101	BAGLAMAS	1
103	102	OUD	1
104	103	SANTURI	1

*1 MSB = 7FH, LSB = 00H Prg. Ch. # = 2 *2 MSB = 7FH, LSB = 00H Prg. Ch. # = 1

The following voices cannot be directly selected from the panel controls; they are special voices programmed into the songs of the PortaTone and are selected automatically in song playback. However, they can be selected by a connected MIDI device; the corresponding bank select messages are: MSB = 00H, LSB = 00H.

Prg.Ch. #	Voice Name	Used Notes
0	Piano	1
3	Honky-tonk Piano	2
4	Electric Piano1	1
5	Electric Piano2	1
6	Harpsichord	1
7	Clavi	1
8	Celesta	1
11	Vibraphone	1
12	Marimba	1
16	Draw.Organ	1
17	Percussive Organ	1
19	Church Organ	1
20	Full Organ	2
21	Accordion	1
22	Harmonica	1
23	Wave Organ	2
24	Gut Guitar	1
25	Acoustic Guitar	1
26	Jazz Guitar	1
27	Electric Guitar	1
28	12Strings Guitar	2
29	Electric&Acoustic Guitar	2
30	Distortion Guitar	1
31	Ukulele	1
32	Acoustic Bass	1
33	Electric Bass(finger)	1
34	Electric Bass(mute)	1
36	Slap Bass 1	1
38	Synth Bass 1	1
40	Violin	1
42	Cello	1
46	Harp	1
49	Strings	1
51	Synth Strings 2	1
56	Trumpet	1
57	Trombone	1
59	Muted Trumpet	1
60	French Horn	1
61	Brass Section	1
63	Synth Brass2	1
65	Alto Sax	1

Prg.Ch. #	Voice Name	Used Notes
66	Tenor Sax	1
71	Clarinet	1
73	Flute	1
75	Pan Flute	1
80	Lead 1	1
81	Lead 2	1
82	Rising Lead	1
88	Piano Pad	2
89	Electric Piano Pad	2
90	Harpsichord & Celesta	2
91	Distortion Guitar & Organ	2
92	Acoustic Guitar Pad	2
93	Violin & Strings	2
94	Horn & Synth Strings	2
95	Slow Strings	1
98	Vibraphone & Marimba	2
100	Bouzouki	1
101	Baglamas	1
102	Oud	1
103	Santuri	1
104	Sitar	1
105	Banjo	1
106	Sustain Piano	1
107	Sustain E.Piano1	1
108	Sustain E.Piano2	1
109	Sustain E.Guitar	1
110	Sustain Vibraphone	1
111	Sustain Strings	1
114	Steel Drums	1
117	SE Voice	1
118	Wood Bass / Piano	1
119	Strings / Piano	1
120	Finger Bass / Electric Piano	1
121	Slap Bass / Clavi	1
122	Finger Bass / Electric Organ	1
123	Finger Bass / Folk Guitar	1
124	Harp / Violin	1
125	Horn / Trumpet	1
126	Synth Bass / Brass Section	1
127	Piano / Flute	1

■ MIDI IMPLEMENTATION CHART

[Portable Keyboard]
Model: PSR-79

MIDI Implementation Chart

Date: 27-JAN-1998
Version: 1.0

Function		Transmitted	Recognized	Remarks
Basic	Default	1~7, 10	1~7, 10	
Channel	Changed	×	×	
Mode	Default	3	3	
	Messages	×	×	
	Altered	**********	×	
Note		0~127	0~127	
Number	: True voice	**********	0~127	
Velocity	Note ON	○ 9nH, v=1~127	○ 9nH, v=1~127	
	Note OFF	× 9nH, v=0	× 9nH, v=0 or 8nH	
After	key's	×	×	
Touch	Ch's	×	×	
Pitch Bender		×	×	
Control Change	0, 32	○ *1	○ *1	Bank Select MSB, LSB
	1	×	×	Modulation Depth
	6, 38	×	×	Data Entry MSB, LSB
	7	○	○	Volume
	10	○	○	Pan
	11	×	×	Expression
	64	○	○	Sustain
	66	×	×	Sostenuto
	84	○	○	Portamento Controllers
	91	×	×	Reverb Depth
	96	×	×	RPN Inc
	97	×	×	RPN Dec
	100, 101	×	×	RPN LSB, MSB
	120	×	×	All Sound Off
	121	×	×	Reset All Controllers
Program		○ *2	○ *2	
Change	: True #	**********	*2	
System Exclusive		○ *3	○ *3	
System	: Song Position	×	×	
	: Song Select	×	×	
Common	: Tune	×	×	
System	: Clock	×	×	
Real Time	: Commands	×	×	
Aux	: Local ON/OFF	×	×	
	: All Notes OFF	×	×	
Messages	: Active Sense	○	○	
	: Reset	×	×	

Mode 1 : OMNI ON, POLY
Mode 2 : OMNI ON, MONO
Mode 3 : OMNI OFF, POLY
Mode 4 : OMNI OFF, MONO

○ : Yes
× : No

NOTE:

*1 MSB can be used to change the voice for the Melody or Rhythm.
MSB=00H :Melody Voice
MSB=7FH : Rhythm Voice
LSB: Refer to Voice list.

*2 For program change values, refer to the voice list.

*3 < GM System on > F0H,7EH,7FH, 09H, 01H, F7H
All data is restored to the default values.

*4 MIDI does not function (transmit/receive) in the Song mode.

PORTATONE

PSR-GR200

PARTS LIST

■ CONTENTS

OVERALL ASSEMBLY ····· 2
KEYBOARD ASSEMBLY ····· 4
ELECTRICAL PARTS ····· 5

Notes : DESTINATION ABBREVIATIONS

A	: Australian model	J	: Japanese model
B	: British model	U	: U.S. model
C	: Canadian model	V	: General export model（110V）
E	: European model	W	: General export model（220V）
I	: Indonesian model	X	: General export model
O	: Chinese model	Y	: Export model

· The numbers in "QTY " show quantities for each unit.
· The parts with "--" in "PART NO." are not available as spare parts.

■ OVERALL ASSEMBLY

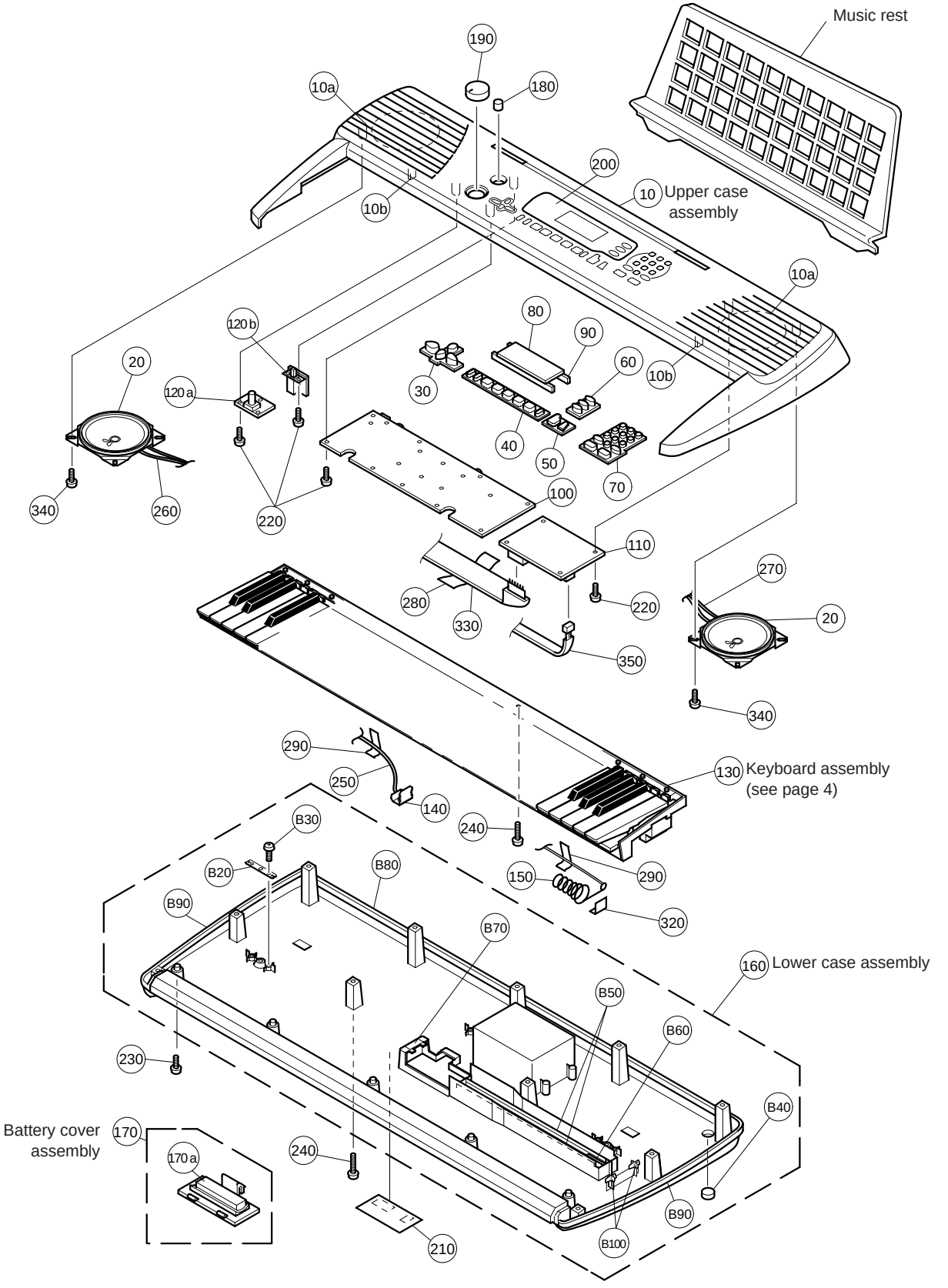

Note: Connector assemblies (250) , (260) , (270) , (330) , (350) are shown in the CIRCUIT BOARD LAYOUT section on page 6.

	REF NO.	PART NO.	DESCRIPTION			REMARKS	QTY	
			OVERALL ASSEMBLY			PSR-GR200 (V237770)		
*	10	**V2378100**	Upper Case Assembly					
	10a	— —	Speaker Cloth	W		(VQ59800)	2	
	10b	**VJ861500**	Vibration-proof Tape	18X25			2	03
	20	**XN789B00**	Speaker	12.0cm 4ohm 5W			2	05
	30	**V2117000**	PN Rubber Bottons	A79		OVERALL, DEMO START		
	40	**V2117300**	PN Rubber Bottons	B79		ACMP ON/OFF, SYNC-START, INTRO ENDING, MAIN A,OTS, MAIN B, CHORD GUIDE		
	50	**V2117400**	PN Rubber Bottons	C79		PORTABLE GRAND, METRONOME		
	60	**V2117500**	PN Rubber Bottons	D79		SONG, VOICE, STYLE		
	70	**V2228000**	PN Rubber Bottons	E79		MULTI PAD (ten key)		
	80	**V0053900**	LCD	TTR1792DPRDCN				
	90	**V2150800**	Rubber Contact	98 ZEE-510			2	02
	100	**V2128700**	Circuit Board	AM/PN				
*	110	**V2439300**	Circuit Board	DM				
*	120a	**NX007990**	Circuit Board	VR				
*	120b	**NX008000**	Circuit Board	SW				
	130	**VS515600**	Keyboard Assembly	16L C61				20
	140	**VI663700**	Terminal	+				
	150	**VI865800**	Spring Terminal	-				
	160	**V2116600**	Lower Case Assembly					
	170	**VM754600**	Battery Cover Assembly					
	170a	**VI107900**	Battery Cushion	WH				01
	180	**VQ218800**	Knob			STAND BY/ON		03
	190	**VU432400**	Knob	V		MASTER VOLUME		01
	200	**V2378700**	LCD Panel					
	210	— —	Label	PSR-GR200 CE		(V237780)		
	220	**EP600280**	Bind Head Tapping Screw-P	3.0X8 MFZN2Y			24	01
	230	**EP600300**	Bind Head Tapping Screw-P	3.0X12 MFZN2Y			14	01
	240	**VK228100**	Bind Head Tapping Screw-P	3.0X25 MFZN2Y			5	01
	250	— —	Connector Assembly	BATTERY R250/BL650		(V214340)		
	260	— —	Connector Assembly	SP-L 2P L=270		(V214290)		
	270	— —	Connector Assembly	SP-R 2P L=570		(V214300)		
	280	**VN195400**	Adhesive Tape	12X70			3	03
	290	**VA126100**	Adhesive Tape	12X50			10	03
	320	**VJ861500**	Vibration-proof Tape	18X25			2	03
	330	— —	Connector Assembly	MK 17P L=450		(V213970)		
	340	**VB931600**	Bind Head Tapping Screw-P	4.0X8 MFZN2BL			8	01
	350	— —	Connector Assembly	AG-OUT 3P L=620		(V213730)		
			ACCESSORIES					
		V2115000	Music Rest					
		— —	Song Book	PSR-GR200		(V259800)		
		V2116600	LOWER CASE ASSEMBLY					
	B20	**VI104400**	Holder	CH			3	
	B30	**EP600280**	Bind Head Tapping Screw-P	3.0X8 MFZN2Y			6	01
	B40	**CB043750**	Foot	BL T1.6			5	01
	B50	**VJ790400**	Vibration-proof Tape	10X290X0.2			2	03
	B60	— —	Vibration-proof Tape	12X85X0.5		(VU95370)		
	B70	— —	Vibration-proof Tape	12X32X0.5		(VU95430)		
	B80	— —	Dust Proof Cloth	870X22X0.5		(V273420)	2	
	B90	— —	Dust Proof Cloth	375X22X0.5		(V273430)	2	
	B100	**VJ861500**	Vibration-proof Tape	18X25			4	03

* New Parts

Japan only

■ KEYBOARD ASSEMBLY

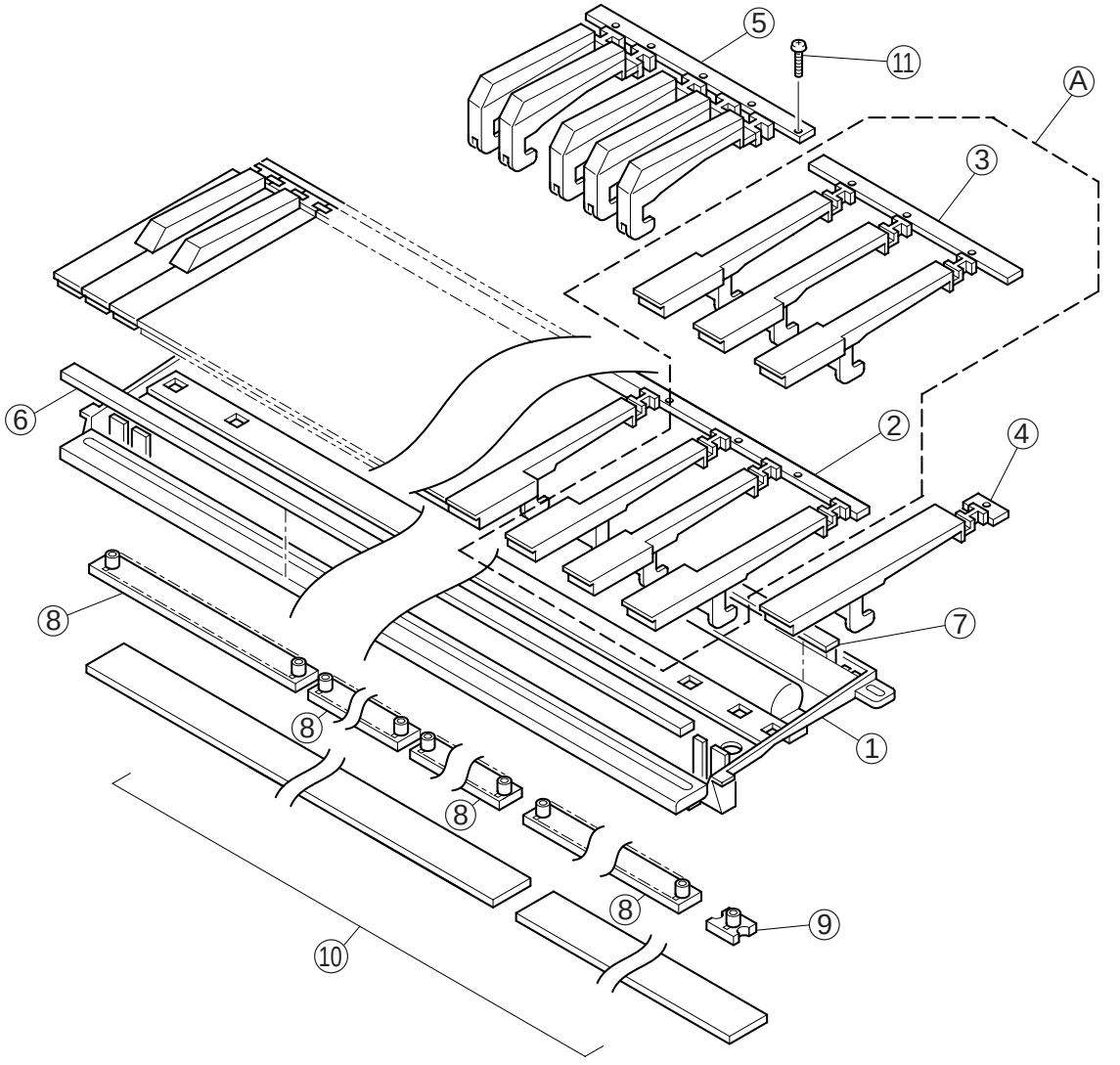

REF NO.	PART NO.	DESCRIPTION			REMARKS	QTY	
	VS515600	KEYBOARD ASSEMBLY	16L C61		PSR-GR200		20
1	— —	Frame	C61		(VS15380)		
A	**VH1809C0**	White Keys	CEGBDFA 1OCT			5	05
2	— —	White Keys	CEGB		(VH18090)	5	
3	— —	White Keys	DFA		(VH18100)	5	
4	**VH181100**	White Key	C'				01
5	**VH181200**	Black Keys				5	03
6	**VH181300**	Felt					03
7	**VH181400**	Rubber Sheet					01
8	**VE975200**	Rubber Contact	12KEYS			5	03
9	**VE975300**	Rubber Contact	1KEY				01
10	**VS513800**	Circuit Board	MK C61				08
11	**EP600310**	Bind Head Tapping Screw-P	3.0X16 MFZN2Y			21	01
11	**VS756700**	Bind Head Tapping Screw-P	3.0X16 MFZN2B			21	01

⋆ New Parts

Japan only

■ ELECTRICAL PARTS

	REF NO.	PART NO.	DESCRIPTION			REMARKS	QTY	
			ELECTRICAL PARTS			PSR-GR200		
		V2128700	Circuit Board	AM/PN		(XU524B0)		
*		**V2439300**	Circuit Board	DM		(XU523B0)		
		VS513800	Circuit Board	MK C61		(XP370A0)		08
*		**NX007990**	Circuit Board	VR		(XR658B0)		
*		**NX008000**	Circuit Board	SW		(XR658B0)		
		V2128700	Circuit Board	AM/PN		(XU524B0)		
		EP600190	Bind Head Tapping Screw-B	3.0X8 MFZN2BL				01
		V2148500	Heat Sink					
		VA078900	Jumper Wire	0.55				
	CN001	**VI878700**	Cable Holder	51048 9P TE				01
	CN002	**VI879000**	Cable Holder	51048 2P TE				01
	CN003	**LB918020**	Base Post Connector	XH 2P TE				01
	CN004	**VK024800**	Wire Trap	52147 4P TE				01
	CN005	**VI878200**	Cable Holder	51048 4P TE				01
	CN006	**VB389900**	Connector Base Post	PH- 3P TE				01
	CN007	**VK024900**	Wire Trap	52147 5P TE				01
	CN008	**VK024600**	Wire Trap	52147 2P TE				01
	CN009	**VK024600**	Wire Trap	52147 2P TE				01
	CN010	**VI878400**	Cable Holder	51048 6P TE				01
	C0001	**VC694800**	Semiconductive Cera. Cap.	0.1000 25V Z				01
	C0002	**VC694800**	Semiconductive Cera. Cap.	0.1000 25V Z				01
	C0003	**UR849100**	Electrolytic Cap.	1000 25.0V				01
	C0004	**VC694800**	Semiconductive Cera. Cap.	0.1000 25V Z				01
	C0005	**VC694800**	Semiconductive Cera. Cap.	0.1000 25V Z				01
	C0006	**VC694800**	Semiconductive Cera. Cap.	0.1000 25V Z				01
	C0007	**VC694800**	Semiconductive Cera. Cap.	0.1000 25V Z				01
	C0008	**VC694800**	Semiconductive Cera. Cap.	0.1000 25V Z				01
	C0009	**UR866100**	Electrolytic Cap.	1.00 50.0V				01
	C0010	**VC694800**	Semiconductive Cera. Cap.	0.1000 25V Z				01
	C0011	**VC694800**	Semiconductive Cera. Cap.	0.1000 25V Z				01
	C0013	**UA353560**	Mylar Capacitor	5600P 50V J				
	C0014	**UR866100**	Electrolytic Cap.	1.00 50.0V				01
	C0018	**UA353560**	Mylar Capacitor	5600P 50V J				
	C0019	**VU838100**	Monolithic Mylar Capacitor	ECQ-V1H105JL3				
	C0020	**VU838100**	Monolithic Mylar Capacitor	ECQ-V1H105JL3				
	C0023	**UR866470**	Electrolytic Cap.	4.70 50.0V				01
	C0024	**UR838100**	Electrolytic Cap.	100.00 16.0V				01
	C0025	**UR848100**	Electrolytic Cap.	100.00 25.0V				01
	C0026	**UR839100**	Electrolytic Cap.	1000 16.0V				01
	C0027	**UR839100**	Electrolytic Cap.	1000 16.0V				01
	C0028	**VC694800**	Semiconductive Cera. Cap.	0.1000 25V Z				01
	C0029	**UR837470**	Electrolytic Cap.	47.00 16.0V				01
	C0030	**UR837470**	Electrolytic Cap.	47.00 16.0V				01
	C0031	**FG644100**	Ceramic Capacitor-F	0.0100 50V Z				01
	C0032	**FG613100**	Ceramic Capacitor-B	1000P 50V K				01
	C0033	**VD930900**	Semiconductive Cera. Cap.	0.1000 25V M				01
	C0034	**FG613100**	Ceramic Capacitor-B	1000P 50V K				01
	C0035	**UA353100**	Mylar Capacitor	1000P 50V J				01
	C0036	**UA353100**	Mylar Capacitor	1000P 50V J				01
	D0001	**VL723600**	Diode	20E1-FC4				01
	D0001	**VY717100**	Diode	LT2A02-E				01
	FZ001	**VV136100**	Fuse	with lead cap 3A J				01
	FZ001	**V2559600**	Fuse	3.00A J				
	IC001	**XR793A00**	IC	KS0076BQ-00		LCD DRIVER		05
*	IC001	**XV226A00**	IC	KS0066U-10B		LCD DRIVER		
*	IC002	**XV435A00**	IC	LA4601N		POWER 7.0W 2ch		
	JK001	**VJ207400**	DC-IN Connector	16V DC 3A HEC2305		DC IN 10-12V		01
	JK002	**LB101870**	Phone Jack	YKB21-5006		PHONES/AUX OUT		03
	JK003	**VC687500**	Phone Jack	YKB21-5014		SUSTAIN		01
	JK004	**VJ107200**	DIN Connector	YKF51-5050 5P		MIDI OUT		01
	JK005	**VJ107200**	DIN Connector	YKF51-5050 5P		MIDI IN		01
	J0001	**VA078900**	Jumper Wire	0.55				
	L0001	**VQ884000**	Line Filter	CM08RB01				03
	L0002	**VB971100**	Coil	FL5R200QN				01
	L0003	**VB971100**	Coil	FL5R200QN				01
	L0004	**VB971100**	Coil	FL5R200QN				01

* New Parts

Japan only

	REF NO.	PART NO.	DESCRIPTION			REMARKS	QTY	
	L0005	**VB971100**	Coil	FL5R200QN				01
	L0006	**VB971100**	Coil	FL5R200QN				01
	L0007	**VB971100**	Coil	FL5R200QN				01
	L0008	**VB971100**	Coil	FL5R200QN				01
	L0009	**VB971100**	Coil	FL5R200QN				01
	L0010	**VB971100**	Coil	FL5R200QN				01
	L0011	**VB971100**	Coil	FL5R200QN				01
	RA001	**V0072900**	Resistor Array	EXB-Z6N222J				01
	R0001	**VU535100**	Metal Film Resistor	91.0K 1/6 F				01
	R0001	**VU535200**	Metal Film Resistor	91.0K 1/4 F				
	R0004	**HF757150**	Carbon Resistor	15.0K 1/4 J				01
	R0005	**HF756100**	Carbon Resistor	1.0K 1/4 J				01
	R0009	**HF757150**	Carbon Resistor	15.0K 1/4 J				01
	R0011	**HF756100**	Carbon Resistor	1.0K 1/4 J				01
	R0012	**HF756220**	Carbon Resistor	2.2K 1/4 J				01
	R0013	**HF755100**	Carbon Resistor	100.0 1/4 J				01
	R0014	**HF755100**	Carbon Resistor	100.0 1/4 J				01
	R0015	**HF755330**	Carbon Resistor	330.0 1/4 J				01
	R0016	**HF755330**	Carbon Resistor	330.0 1/4 J				01
	R0017	**HF756100**	Carbon Resistor	1.0K 1/4 J				01
	R0018	**HF756100**	Carbon Resistor	1.0K 1/4 J				01
	W0002	— —	Connector Assembly	PS 4P L=540		(V213740)		
	W0003	— —	Connector Assembly	MIDI 6P L=130		(V213770)		
	W0004	— —	Connector Assembly	LCD 9P L=160		(V214110)		
	W0005	— —	Connector Assembly	PN 12P L=100		(V213900)		
	W0007	— —	Earth Wire	1		(V264150)		
	W0008	— —	Earth Wire	2		(V264160)		
*		**V2439300**	Circuit Board	DM		(XU523B0)		
		VK863100	IC Socket	DICF-42CS-E				03
		VA078900	Jumper Wire	0.55				
	CA001	**VH285500**	Ceramic Capacitor Array	470P 50V M				02
	CA002	**VT487100**	Ceramic Capacitor Array	470P X12				02
	CN001	**VK025600**	Wire Trap	52147 12P TE				01
	CN002	**VK025300**	Wire Trap	52147 9P TE				01
	CN003	**VG924500**	Wire Trap	52328 17P TE				02
	CN004	**VB389900**	Connector Base Post	PH- 3P TE				01
	CN005	**VK024800**	Wire Trap	52147 4P TE				01
	CN006	**VF728300**	Wire Trap	52147 6P TE				01
*	CR001	**V2905100**	Ceramic Resonator	14M CST14.00MXW140				
	C0001	**VD930900**	Semiconductive Cera. Cap.	0.1000 25V M				01
	C0002	**VD930900**	Semiconductive Cera. Cap.	0.1000 25V M				01
	C0003	**UR828100**	Electrolytic Cap.	100.00 10.0V				01
	C0004	**UR828100**	Electrolytic Cap.	100.00 10.0V				01
	C0005	**VD930900**	Semiconductive Cera. Cap.	0.1000 25V M				01
	C0006	**VD930900**	Semiconductive Cera. Cap.	0.1000 25V M				01
	C0007	**VD930900**	Semiconductive Cera. Cap.	0.1000 25V M				01
	C0008	**UR828100**	Electrolytic Cap.	100.00 10.0V				01
	C0009	**VD930900**	Semiconductive Cera. Cap.	0.1000 25V M				01
	C0010	**VD930900**	Semiconductive Cera. Cap.	0.1000 25V M				01
	C0011	**UR839100**	Electrolytic Cap.	1000 16.0V				01
	C0012	**UA353150**	Mylar Capacitor	1500P 50V J				
	C0013	**FG613100**	Ceramic Capacitor-B	1000P 50V K				01
	C0014	**UA353150**	Mylar Capacitor	1500P 50V J				
	C0016	**UR837470**	Electrolytic Cap.	47.00 16.0V				01
	C0017	**UA354100**	Mylar Capacitor	0.0100 50V J				01
	C0018	**UA353150**	Mylar Capacitor	1500P 50V J				
	C0019	**FG613100**	Ceramic Capacitor-B	1000P 50V K				01
	C0020	**UA353150**	Mylar Capacitor	1500P 50V J				
	C0022	**UR837470**	Electrolytic Cap.	47.00 16.0V				01
	C0023	**UA354100**	Mylar Capacitor	0.0100 50V J				01
	C0024	**UR828100**	Electrolytic Cap.	100.00 10.0V				01
	C0025	**VD930900**	Semiconductive Cera. Cap.	0.1000 25V M				01
	C0026	**VD930900**	Semiconductive Cera. Cap.	0.1000 25V M				01
	C0027	**VD930900**	Semiconductive Cera. Cap.	0.1000 25V M				01
	C0028	**VD930900**	Semiconductive Cera. Cap.	0.1000 25V M				01
	C0029	**UR828220**	Electrolytic Cap.	220.00 10.0V				01
	C0030	**VD930900**	Semiconductive Cera. Cap.	0.1000 25V M				01
	C0031	**VD930900**	Semiconductive Cera. Cap.	0.1000 25V M				01
	C0032	**VD930900**	Semiconductive Cera. Cap.	0.1000 25V M				01

* New Parts

Japan only

	REF NO.	PART NO.	DESCRIPTION			REMARKS	QTY	
	C0033	**VD930900**	Semiconductive Cera. Cap.	0.1000 25V M				01
	C0034	**VD930900**	Semiconductive Cera. Cap.	0.1000 25V M				01
	C0035	**VD930900**	Semiconductive Cera. Cap.	0.1000 25V M				01
	D0001	**VB941200**	Diode	1SS133,1SS176				01
	D0002	**VB941200**	Diode	1SS133,1SS176				01
	D0003	**VB941200**	Diode	1SS133,1SS176				01
	IC001	**XU355A00**	IC	YMW728-F		GEW12		10
*	IC002	**XV002A00**	IC			PROGRAM,STYLE,WAVE,16M		
*	IC002	**XV002100**	IC			PROGRAM,STYLE,WAVE,16M		
	IC003	**XP712A00**	IC	IC-PST993I-T		RESET		01
	IC004	**XB247A00**	IC	UPC4570HA		OP AMP		01
	IC005	**XL450A00**	IC	PQ05RA1		REGULATOR +5V 1.0A		03
	IC006	**XP713A00**	IC	MM1180ZTT		REGULATOR +3.3V		02
	IC007	**VG181900**	Photo Coupler	PC-900V				03
	L0001	**VB971100**	Coil	FL5R200QN				01
	L0002	**VB971100**	Coil	FL5R200QN				01
	L0003	**VB971100**	Coil	FL5R200QN				01
	L0004	**VB971100**	Coil	FL5R200QN				01
	L0005	**VB971100**	Coil	FL5R200QN				01
	RA001	**VH373200**	Resistor Array	RGLE12X473J				01
	RA002	**VH307000**	Resistor Array	RGLE6X473J				01
	R0001	**HF757470**	Carbon Resistor	47.0K 1/4 J				01
	R0002	**HF754680**	Carbon Resistor	68.0 1/4 J				01
	R0003	**HF755220**	Carbon Resistor	220.0 1/4 J				01
	R0004	**VR346900**	Thermistor	ERTD2FGJ801S 800				03
	R0005	**HF754470**	Carbon Resistor	47.0 1/4 J				01
	R0006	**HF759100**	Carbon Resistor	1.0M 1/4 J				01
	R0007	**HF755680**	Carbon Resistor	680.0 1/4 J				01
	R0008	**HF757150**	Carbon Resistor	15.0K 1/4 J				01
	R0009	**HF757220**	Carbon Resistor	22.0K 1/4 J				01
	R0010	**HF757220**	Carbon Resistor	22.0K 1/4 J				01
	R0011	**HF757150**	Carbon Resistor	15.0K 1/4 J				01
	R0012	**HF757100**	Carbon Resistor	10.0K 1/4 J				01
	R0013	**HF757100**	Carbon Resistor	10.0K 1/4 J				01
	R0014	**HF755150**	Carbon Resistor	150.0 1/4 J				01
	R0015	**HF757150**	Carbon Resistor	15.0K 1/4 J				01
	R0016	**HF757220**	Carbon Resistor	22.0K 1/4 J				01
	R0017	**HF757220**	Carbon Resistor	22.0K 1/4 J				01
	R0018	**HF757150**	Carbon Resistor	15.0K 1/4 J				01
	R0019	**HF757100**	Carbon Resistor	10.0K 1/4 J				01
	R0020	**HF757100**	Carbon Resistor	10.0K 1/4 J				01
	R0021	**HF755150**	Carbon Resistor	150.0 1/4 J				01
	R0022	**HF756220**	Carbon Resistor	2.2K 1/4 J				01
	R0024	**HF755100**	Carbon Resistor	100.0 1/4 J				01
	R0025	**HF755100**	Carbon Resistor	100.0 1/4 J				01
	R0026	**HF755100**	Carbon Resistor	100.0 1/4 J				01
	R0027	**HF755100**	Carbon Resistor	100.0 1/4 J				01
	R0028	**HF755100**	Carbon Resistor	100.0 1/4 J				01
	R0029	**HF755100**	Carbon Resistor	100.0 1/4 J				01
	R0030	**HF755100**	Carbon Resistor	100.0 1/4 J				01
	R0031	**HF755100**	Carbon Resistor	100.0 1/4 J				01
	R0032	**HF755100**	Carbon Resistor	100.0 1/4 J				01
	R0033	**HF755100**	Carbon Resistor	100.0 1/4 J				01
	R0034	**HF755100**	Carbon Resistor	100.0 1/4 J				01
	R0035	**HF757470**	Carbon Resistor	47.0K 1/4 J				01
	R0036	**HF757100**	Carbon Resistor	10.0K 1/4 J				01
	R0037	**HF755220**	Carbon Resistor	220.0 1/4 J				01
	R0038	**HF755220**	Carbon Resistor	220.0 1/4 J				01
	R0039	**HF755220**	Carbon Resistor	220.0 1/4 J				01
	R0040	**HF755270**	Carbon Resistor	270.0 1/4 J				01
	R0041	**HF756470**	Carbon Resistor	4.7K 1/4 J				01
	R0042	**HF755220**	Carbon Resistor	220.0 1/4 J				01
	R0043	**HF757220**	Carbon Resistor	22.0K 1/4 J				01
	R0044	**HF757220**	Carbon Resistor	22.0K 1/4 J				01
	R0045	**HF757100**	Carbon Resistor	10.0K 1/4 J				01
	TR001	**IC174070**	Transistor	2SC1740S R,S				01
	TR002	**IC174070**	Transistor	2SC1740S R,S				01
		— —	Circuit Board	VR/SW		(V212880)(XR658B0)		
*		**NX007990**	Circuit Board	VR		(XR658B0)		

* New Parts

Japan only

	REF NO.	PART NO.	DESCRIPTION			REMARKS	QTY	
*		**NX008000**	Circuit Board	SW		(XR658B0)		
	SW	**VQ670600**	Push Switch	SDDLB1 J,UC,CE		STAND BY/ON		03
	VR	**VZ048400**	Rotary Variable Resistor	A10.0K XV0141GPVN2		MASTER VOLUME		02
	CN040	**VI878300**	Cable Holder	51048 5P TE				01
	CN050	**VI878200**	Cable Holder	51048 4P TE				01
	W0001	— —	Connector Assembly	VR 5P L=100		(V214090)		
	W0002	— —	Connector Assembly	SW 4P L=120		(V214080)		
		VS513800	Circuit Board	MK C61		(XP370A0)		08
	20	**VL644300**	Diode	IN4148TY-P=6				01
	20	**VV437800**	Diode	1N4148(DO-34)				01
	50	**VG924500**	Wire Trap	52328 17P TE				02
	60	— —	Cable	4P		(VS12630)		
	70	— —	Cable	6P		(VS12620)		
		XN789B00	Speaker	12.0cm 4ohm 5W				05
		V0053900	LCD	TTR1792DPRDCN				

* New Parts

Japan only

■PSR-GR200 OVERALL CIRCUIT DIAGRAM

DM

REGULATOR

REGULATOR

Photo Coupler

IC1
YMW72B
GEW 12

ROM 16M

RESET

OP AMP

OP AMP

MK (61 Keys)

AM/PN

VR

MASTER VOLUME

SW

STAND BY ON

DC IN 10-12V

FROM BATTERY

LCD

LCD DRIVER

Power Amplifier

Speakers

PHONES/
AUX OUT

MIDI

SUSTAIN

OUT

IN

- PQ05RA1(XL450A00) REGULATOR +5V

1:INPUT
2:OUTPUT
3:GND
4:ON/OFF CONTROL

- MM1180ZTT(XP713A00) REGULATOR +3.3V

1:V in
2:GND
3:V out

半セ : Semicondactive ceramic capacitor
セ : Ceramic capacitor
マ : Mylar capacitor

DM : 28CC1-8812696
AM/PN : 28CC1-8812697
SW : 28CC1-8812697
VR : 28CC1-8812697
MK : KEC-12397⚠

Note: See parts list for details of circuit board component parts.