DIGITAL WORKSTATION

PSR-A2000

SERVICE MANUAL



CONTENTS

SPECIFICATIONS 3
PANEL LAYOUT 5
DISASSEMBLY PROCEDURE 8
LSI PIN DESCRIPTION 16
CIRCUIT BOARDS 21
TEST PROGRAM 41
JOYSTICK CALIBRATION MODE 49
SAVING FILES 52
DATA BACKUP 53
RESTORING THE FACTORY-PROGRAMMED SETTINGS .. 54
SYSTEM RESET 55
CONNECTING TO A PERSONAL COMPUTER 57
SYSTEM BOOTING FLOWCHART 58
PARTS LIST
BLOCK DIAGRAM
CIRCUIT BOARD LAYOUT & WIRING
OVERALL CIRCUIT DIAGRAM

PK 001866

YAMAHA

HAMAMATSU, JAPAN

Copyright (c) Yamaha Corporation. All rights reserved. PDF '11.08

IMPORTANT NOTICE

This manual has been provided for the use of authorized Yamaha Retailers and their service personnel. It has been assumed that basic service procedures inherent to the industry, and more specifically Yamaha Products, are already known and understood by the users, and have therefore not been restated.

WARNING : Failure to follow appropriate service and safety procedures when servicing this product may result in personal injury, destruction of expensive components and failure of the product to perform as specified. For these reasons, we advise all Yamaha product owners that all service required should be performed by an authorized Yamaha Retailer or the appointed service representative.

IMPORTANT : This presentation or sale of this manual to any individual or firm does not constitute authorization certification, recognition of any applicable technical capabilities, or establish a principal-agent relationship of any form.

The data provided is belived to be accurate and applicable to the unit(s) indicated on the cover. The research engineering, and service departments of Yamaha are continually striving to improve Yamaha products. Modifications are, therefore, inevitable and changes in specification are subject to change without notice or obligation to retrofit. Should any discrepancy appear to exist, please contact the distributor's Service Division.

WARNING : Static discharges can destroy expensive components. Discharge any static electricity your body may have accumulated by grounding yourself to the ground bus in the unit (heavy gauge black wires connect to this bus.)

IMPORTANT : Turn the unit OFF during disassembly and parts replacement. Recheck all work before you apply power to the unit.

WARNING: This product contains chemicals known to the State of California to cause cancer, or birth defects or other reproductive harm.

DO NOT PLACE SOLDER, ELECTRICAL/ELECTRONIC OR PLASTIC COMPONENTS IN YOUR MOUTH FOR ANY REASON WHAT SO EVER!

Avoid prolonged, unprotected contact between solder and your skin! When soldering, do not inhale solder fumes or expose eyes to solder/flux vapor!

If you come in contact with solder or components located inside the enclosure of this product, wash your hands before handling food.

WARNING

Components having special characteristics are marked ⚠ and must be replaced with parts having specification equal to those originally installed.

SAVING DATA



Be sure to perform it

Saving and backing up your data

- Edited Songs/Styles/Voices/Multi Pads and MIDI settings are lost when you turn off the power to the instrument. Save the data to the USER tab display, USB storage device (USB flash memory, etc.).
- Data in the USER tab display may be lost due to malfunction or incorrect operation. Save important data to a USB storage device.

When you change settings in a display page and then exit from that page, Data other than above (edited Songs/Styles/Voices/Multi Pads and MIDI settings, etc.) is automatically stored. However, this edited data is lost if you turn off the power without properly exiting from the relevant display.

Backing up the USB storage device

- To protect against data loss through media damage, we recommend that you save your important data onto two USB storage devices.

SPECIFICATIONS

Size/Weight	Dimensions	Width	1,003 mm (39 5/8")
		Height	148 mm (5 7/8")
		Depth	433 mm (17 1/8")
	Weight	Weight	11 kg (24 lbs., 4 oz.)
Control Interface	Keyboard	Number of Keys	61
		Type	Organ
		Touch Response	Hard2/Hard1/Normal/Soft1/Soft2
	Other Controllers	Joystick	Yes
		Multi Pads	Yes
	Display	Type	B/W QVGA LCD
		Contrast	Yes
		Score Display Function	Yes
		Lyrics Display Function	Yes
		Text Viewer Function	Yes
		Language	English, German, French, Spanish, Italian
	Panel	Language	English
Voices	Tone Generation	Tone Generating Technology	AWM Stereo Sampling
	Polyphony	Number of Polyphony (Max.)	128
	Preset	Number of Voices	565 Voices + 33 Drum/SFX Kits + 480 XG Voices + GM2 + GS (for GS Song Playback)
		Featured Voices	15 MegaVoices, 23 Sweet! Voices, 33 Cool! Voices, 19 Live! Voices, 10 Organ Flutes!
	Custom	Voice Set	Yes
	Expansion	Expansion Pack Installation	Yes (Wave amount: approx. 64 MB max.)
	Compatibility	XG	Yes
		XF	Yes
		GS	Yes
		GM	Yes
		GM2	Yes
Effects	Types	Reverb	42 Preset + 3User
		Chorus	71 Preset + 3 User
		DSP	DSP 1: 271 Preset + 3 User, DSP 2-4: 128 Preset + 10 User
		Master EQ	5 Preset
		Part EQ	28 Parts (Right 1, Right 2, Left, Multi Pad, Style x 8, Song x 16)
	Voice Controls	Voice Layer (Right-hand parts)	Yes (Right 1, Right 2)
		Split (Left-hand part)	Yes (Left)
		Panel Sustain	Yes
		Mono/Poly	Yes
Accompaniment Styles	Preset	Number of Styles	351
		Featured Styles	339 Pro Styles, 12 Session Styles
		File Format	Style File Format GE
		Fingering	Single Finger, Fingered, Fingered On Bass, Multi Finger, AI Fingered, Full Keyboard, AI Full Keyboard
		Style Control	INTRO x 3, MAIN VARIATION x 4, FILL x 4, BREAK, ENDING x 3
	Custom	Style Creator	Yes
	Expansion	Expansion Pack Installation	Yes
	Other Features	Music Finder	1,200 Records (maximum)
		One Touch Setting (OTS)	4 for each Style

Songs	Preset	Number of Preset Songs	5 Sample Songs
	Recording	Number of Songs	Unlimited (depending on the storage media's capacity)
		Number of Tracks	16
		Data Capacity	300 KB
		Recording Function	Quick Recording/Multi Recording/Step Recording
	Compatible Data Format	Playback	SMF (Format 0 & 1), ESEQ, XF
		Recording	SMF (Format 0)
Functions	Registration Memory	Number of Buttons	8 x unlimited banks (depending on the storage media's capacity)
		Control	Regist. Sequence, Freeze
	Lesson/Guide	Lesson/Guide	Follow Lights, Any Key, Karao-Key
		Performance Assistant Technology (P.A.T.)	Yes
	Demo	Demonstration	Yes
	USB Audio	Playback	.wav
		Recording	.wav
	Overall Controls	Metronome	Yes
		Tempo Range	5 – 500, Tap Tempo
		Transpose	-12 – 0 – +12
		Tuning	414.8 – 440 – 466.8 Hz
		Octave Button	Yes
		Scale Setting	Yes
		Scale Memory	Yes
		Number of Preset Scale Type	9
	Miscellaneous	Direct Access	Yes
Storage and Connectivity	Storage	Internal Memory	3.4 MB (Up to 2 MB is used for an Expansion Pack)
		External Drives	USB Flash Memory, etc. (via USB to DEVICE)
	Connectivity	DC IN	16 V
		Headphones	Yes
		MIDI	In/Out
		AUX IN	(R, L/L+R)
		FOOT PEDAL	(optional) Switch or Volume x 2
		OUTPUT	(R, L/L+R)
		USB TO DEVICE	Yes
		USB TO HOST	Yes
Amplifiers and Speakers	Amplifiers		12 W x 2
	Speakers		(12 cm + 5 cm) x 2
Pedals	Assignable Functions		VOLUME, SUSTAIN, SOSTENUTO, SOFT, GLIDE, SONG PLAY/PAUSE, STYLE START/STOP, etc.
Power Supply	AC Power Adaptor		PA-300C or an equivalent recommended by Yamaha
Included Accessories			• Music Rest • AC Power Adaptor * May not be included depending on your particular area. • Owner's Manual • My Yamaha Product User Registration * The PRODUCT ID on the sheet will be needed when you fill out the User Registration form.
Optional Accessories	Footswitches		FC4/FC5
	Foot controller		FC7
	Headphones		HPE-150
	AC Power Adaptor		PA-300C or an equivalent recommended by Yamaha
	Keyboard stand		L-6/L-7 (The exterior size of the PSR-A2000 is beyond the limits as described in the L-6 Assembly Instructions. However, we have determined through tests that the stand can be safely used for the instrument.)

PANEL LAYOUT

• Rear Panel

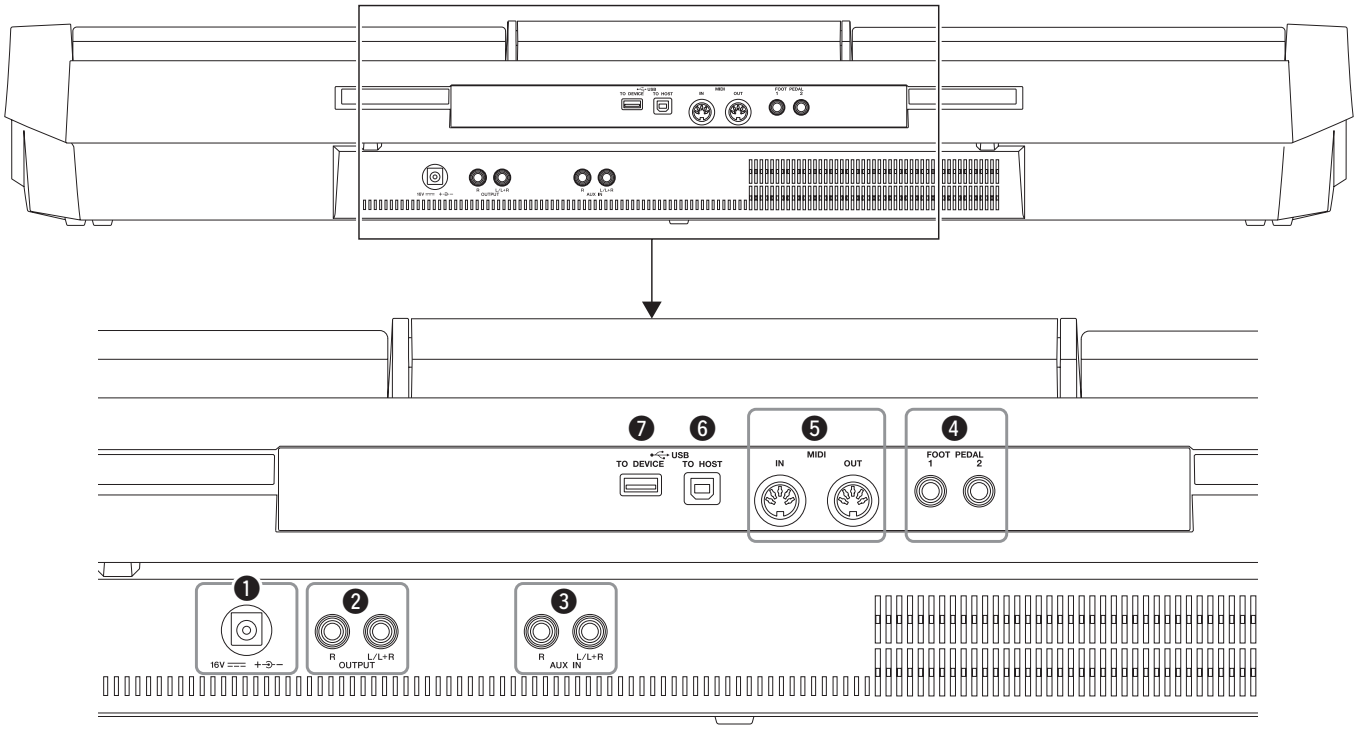

❶ [DC IN] terminal
❷ [OUTPUT L/L+R, R] jacks
❸ [AUX IN L/L+R, R] jacks
❹ [FOOT PEDAL 1, 2] jacks
❺ [MIDI IN, OUT] terminals
❻ [USB TO HOST] terminal
❼ [USB TO DEVICE] terminal

• Top Panel

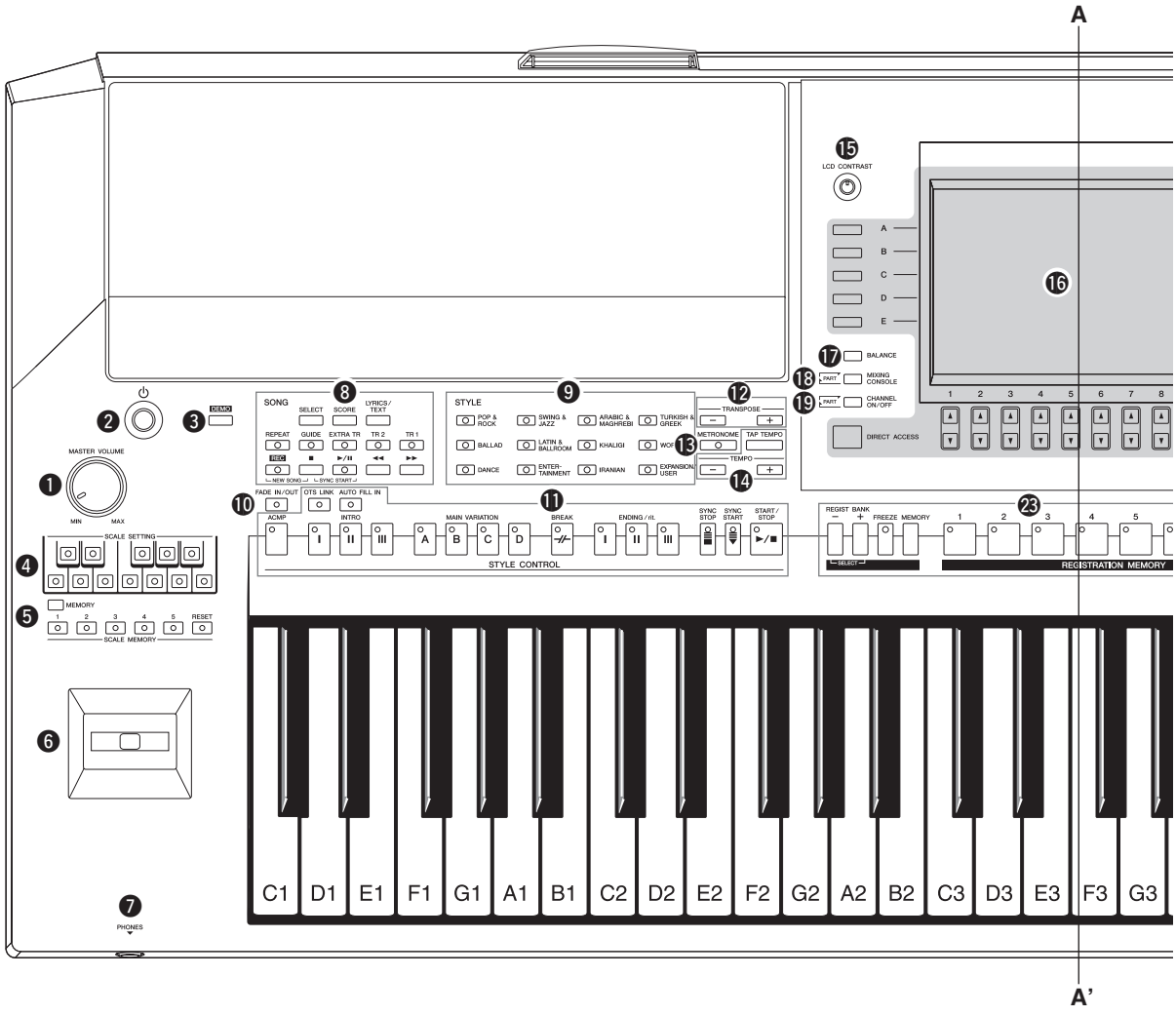

❶ [MASTER VOLUME] control
❷ [⏻] (Standby/On) switch
❸ [DEMO] button
❹ SCALE SETTING buttons
❺ SCALE MEMORY [MEMORY], [1]–[5], [RESET] buttons
❻ Joystick
❼ [PHONES] jack
❽ SONG buttons
❾ STYLE category selection buttons
❿ [FADE IN/OUT] button
⓫ STYLE CONTROL buttons
⓬ TRANSPOSE buttons
⓭ [METRONOME] button
⓮ [TAP TEMPO]/TEMPO buttons
⓯ [LCD CONTRAST] knob
⓰ LCD and related controls
⓱ [BALANCE] button
⓲ [MIXING CONSOLE] button
⓳ [CHANNEL ON/OFF] button
⓴ [FUNCTION] button
㉑ [USB] button
㉒ [SCALE TUNE] button
㉓ REGISTRATION MEMORY buttons

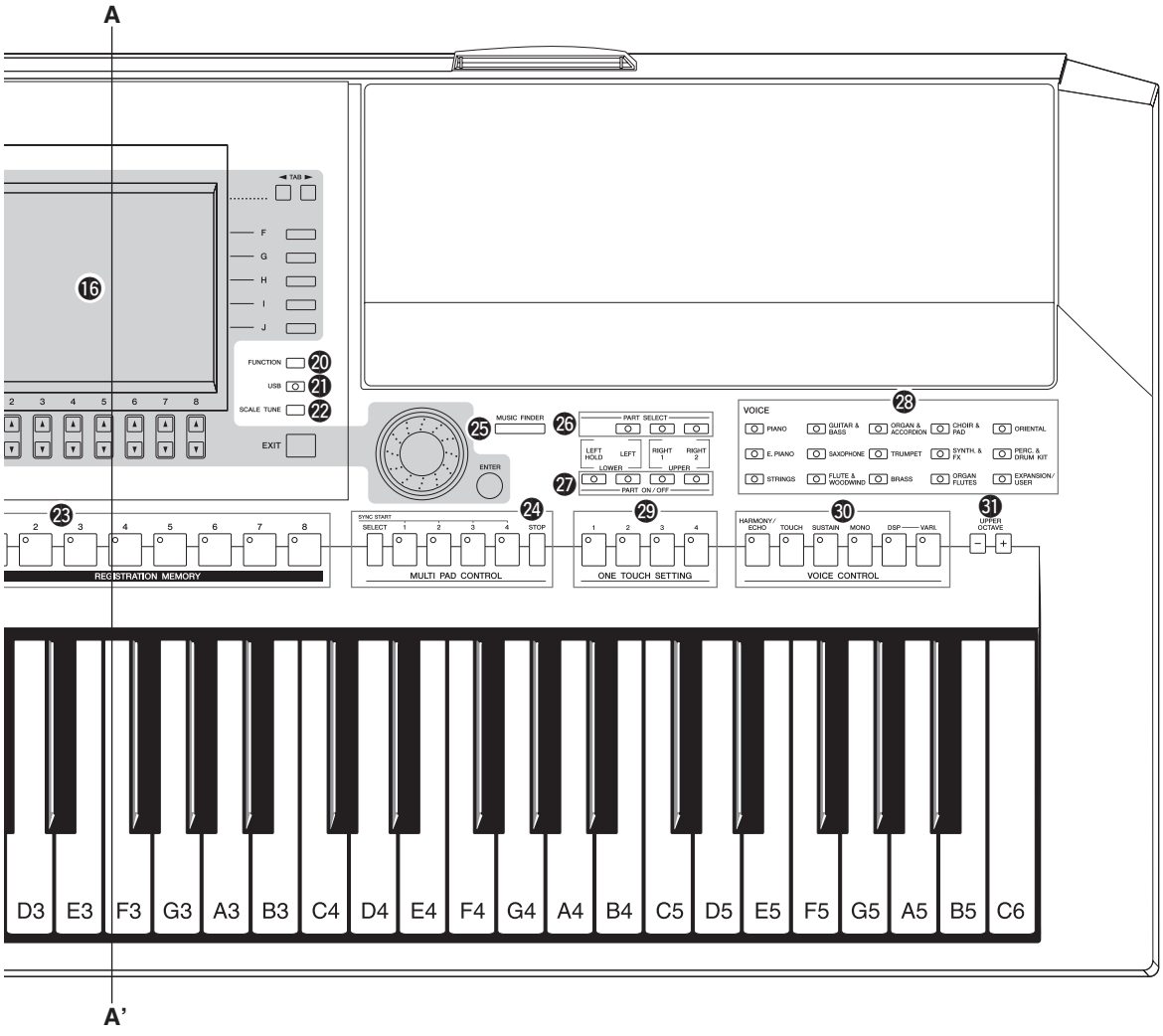

㉔ MULTI PAD CONTROL buttons
㉕ [MUSIC FINDER] button
㉖ PART SELECT buttons
㉗ PART ON/OFF buttons
㉘ VOICE category selection buttons
㉙ ONE TOUCH SETTING buttons
㉚ VOICE CONTROL buttons
㉛ UPPER OCTAVE buttons

DISASSEMBLY PROCEDURE

Precautions

* ***Disassembly or assembly should be performed on a cloth so as not to damage the LCD.***
* ***Install the filament tape and the harness clamp in the same way as they were before removal.***
* ***Notes on Flat Cable***
  Contacts are visible from the back. Pay attention not to insert and install the cable to the connector inversely. (Photo 1)

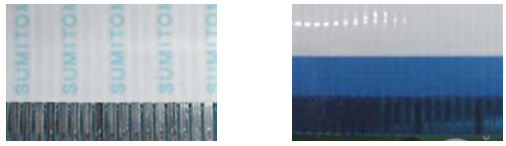

Front Side Back Side

Photo 1

1. Lower Case Assembly
(Time required: About 8 minutes)

1-1 Remove the twenty-eight (28) screws marked [100]. The two bottom boards can then be removed. (Fig. 1)

1-2 Remove the eight (8) screws marked [110], five (5) screws marked [120], two (2) screws marked [130A] and two (2) screws marked [130B]. The lower case assembly can then be removed. (Fig. 1)

2. HP Circuit Board
(Time required: About 8 minutes)

2-1 Remove the lower case assembly. (See procedure 1.)

2-2 Remove the three (3) screws marked [140A]. The HP circuit board can then be removed. (Fig. 3)

* ***When installing the HP circuit board, first tighten the two (2) positioning screws ❶ and ❷ in that order and then the remaining screw. (Fig. 3)***

3. Joystick **(Time required: About 8 minutes)**

3-1 Remove the lower case assembly. (See procedure 1.)

3-2 Remove the four (4) screws marked [560]. The joystick can then be removed. (Fig. 3)

4. SW Circuit Board
(Time required: About 8 minutes)

4-1 Remove the lower case assembly. (See procedure 1.)

4-2 Remove the two (2) screws marked [140B]. The SW circuit board can then be removed. (Fig. 3)

* ***The push knob is not part of the SW circuit board. When replacing the SW circuit board, remove the push knob from the SW circuit board, and install it on the new circuit board. (Fig. 2, Photo 2)***

〈**Bottom view**〉

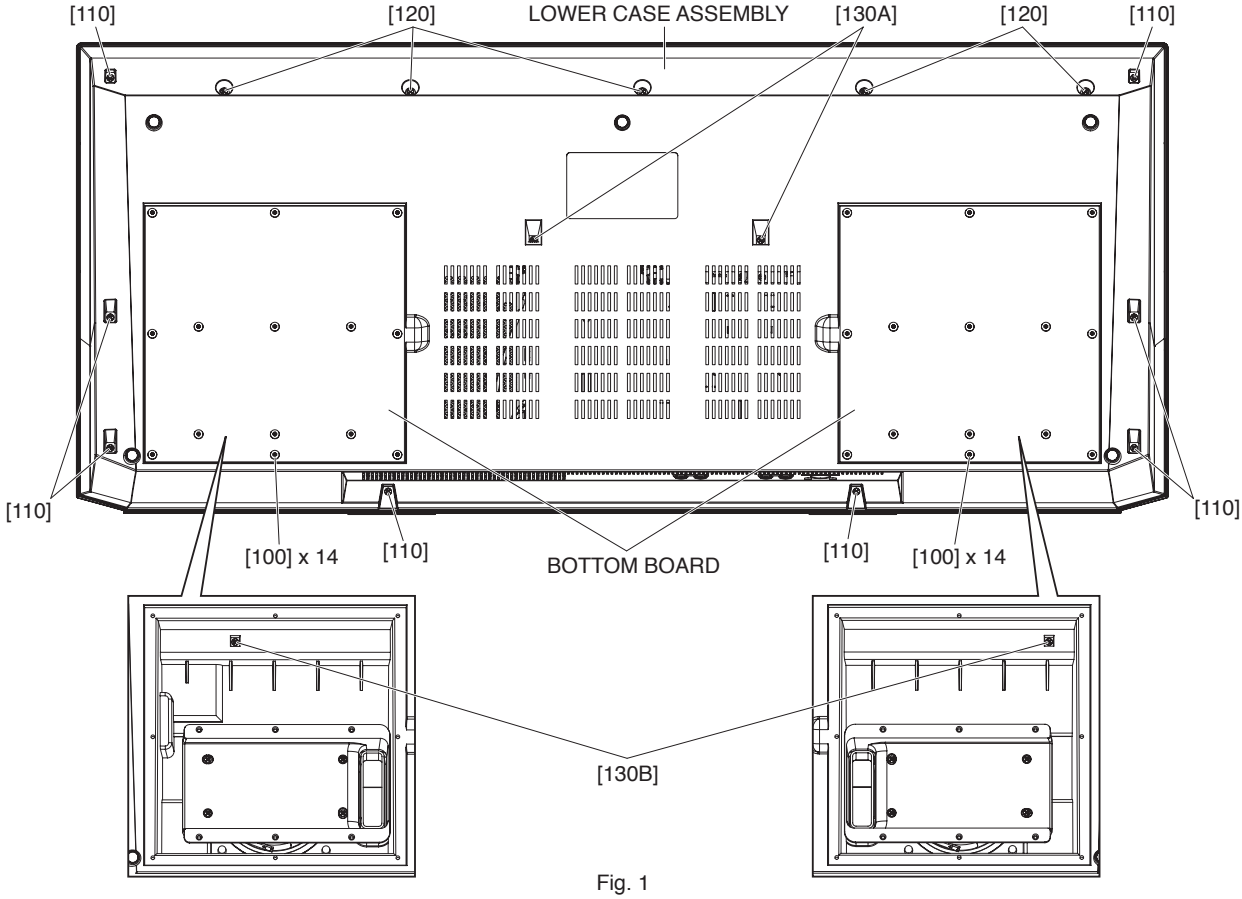

Fig. 1

〈**Top view**〉

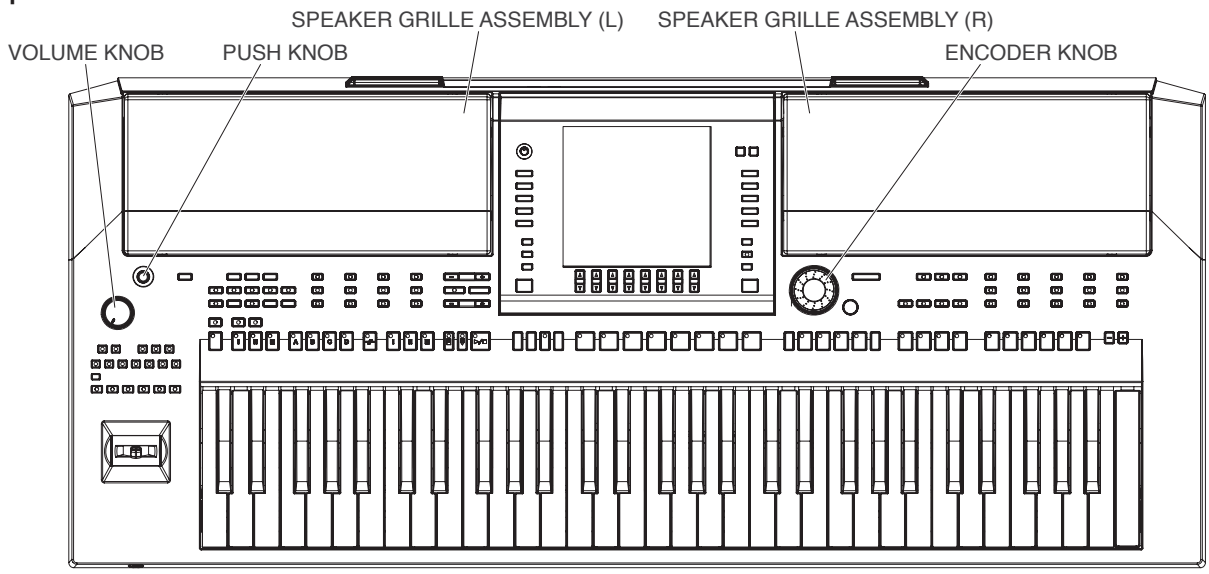

Fig. 2

〈**Bottom view**〉

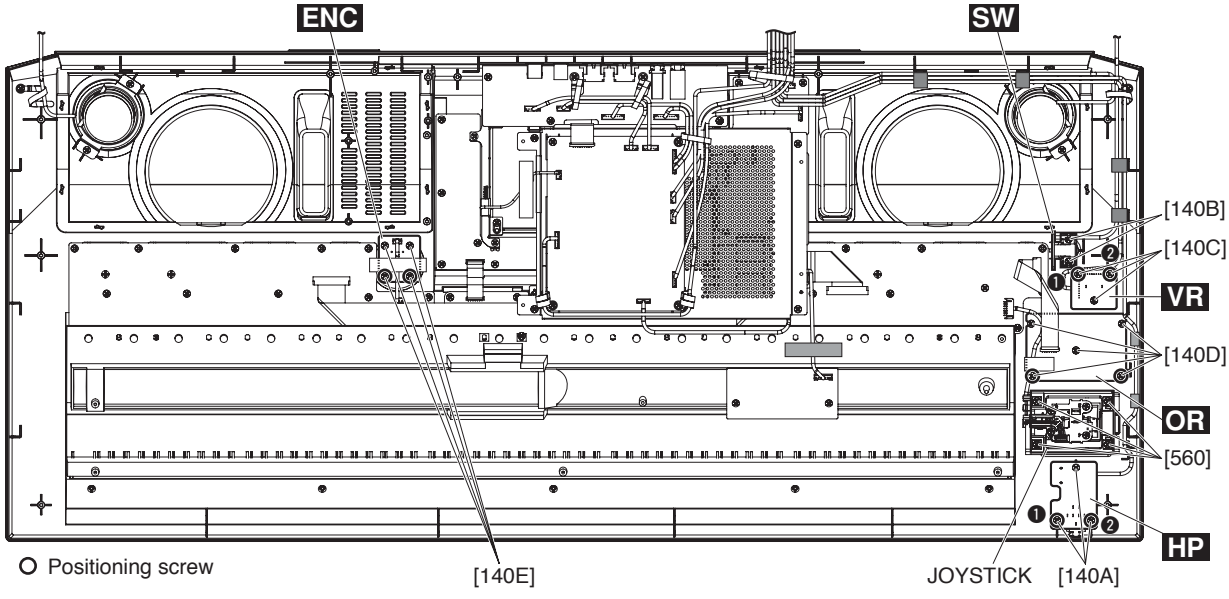

Fig. 3

5. VR Circuit Board

(Time required: About 9 minutes)

5-1 Tie a string or the like to the volume knob. Then, pull the string to remove the volume knob from the control panel side. (Fig. 2, Fig. 4)

5-2 Remove the lower case assembly. (See procedure 1.)

5-3 Remove the three (3) screws marked [140C]. The VR circuit board can then be removed. (Fig. 3)

* ***When installing the VR circuit board, first tighten the two (2) positioning screws ❶ and ❷ in that order and then the remaining screw. (Fig. 3)***

6. OR Circuit Board

(Time required: About 8 minutes)

6-1 Remove the lower case assembly. (See procedure 1.)

6-2 Remove the five (5) screws marked [140D]. The OR circuit board can then be removed. (Fig. 3)

* ***When installing the OR circuit board, first tighten the two (2) positioning screws and then the remaining screws. (Fig. 3)***

7. ENC Circuit Board
(Time required: About 9 minutes)

7-1 Tie a string or the like to the encoder knob. Then, pull the string to remove the encoder knob from the control panel side. (Fig. 2, Fig. 5)

7-2 Remove the lower case assembly. (See procedure 1.)

7-3 Remove the four (4) screws marked [140E]. The ENC circuit board can then be removed. (Fig. 3)

* ***When installing the ENC circuit board, first tighten the two (2) positioning screws and then the remaining screws. (Fig. 3)***

8. DML Circuit Board, Shield Cover U

8-1 Remove the lower case assembly. (See procedure 1.)

8-2 **DML Circuit Board**
(Time required: About 8 minutes)

8-2-1 Remove the four (4) screws marked [140F]. The DML circuit board can then be removed. (Fig. 6)

8-3 **Shield Cover U**
(Time required: About 8 minutes)

8-3-1 Remove the four (4) screws marked [140G]. The shield cover U can then be removed together with the DML circuit board. (Fig. 6)

9. DJK Circuit Board
(Time required: About 9 minutes)

9-1 Remove the lower case assembly. (See procedure 1.)

9-2 Remove the shield cover U together with the DML circuit board. (See procedure 8-3.)

9-3 Remove the five (5) screws marked [140H]. The DJK circuit board can then be removed. (Fig. 6)

* ***When installing the DJK circuit board, first tighten the two (2) positioning screws ❶ and ❷ in that order and then the remaining screws. (Fig. 6)***

10. EIF Circuit Board
(Time required: About 9 minutes)

10-1 Remove the lower case assembly. (See procedure 1.)

10-2 Remove the shield cover U together with the DML circuit board. (See procedure 8-3.)

10-3 Remove the four (4) screws marked [570A]. The EIF circuit board can then be removed. (Fig. 7)

* ***When installing the EIF circuit board, first tighten the two (2) positioning screws and then the remaining screws. (Fig. 7)***

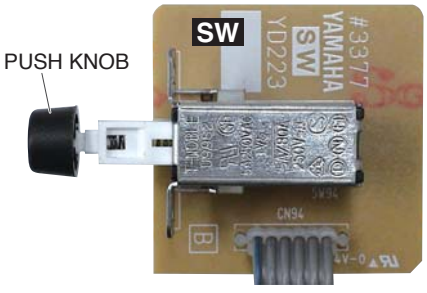

Photo 2

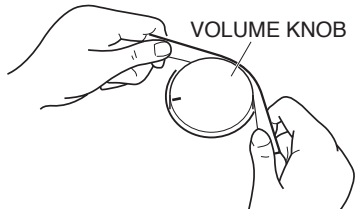

Fig. 4

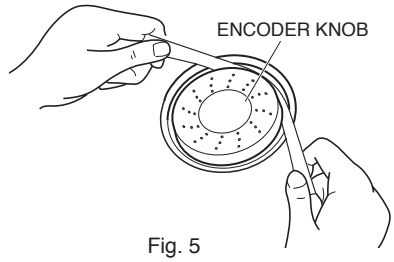

Fig. 5

〈**Bottom view**〉

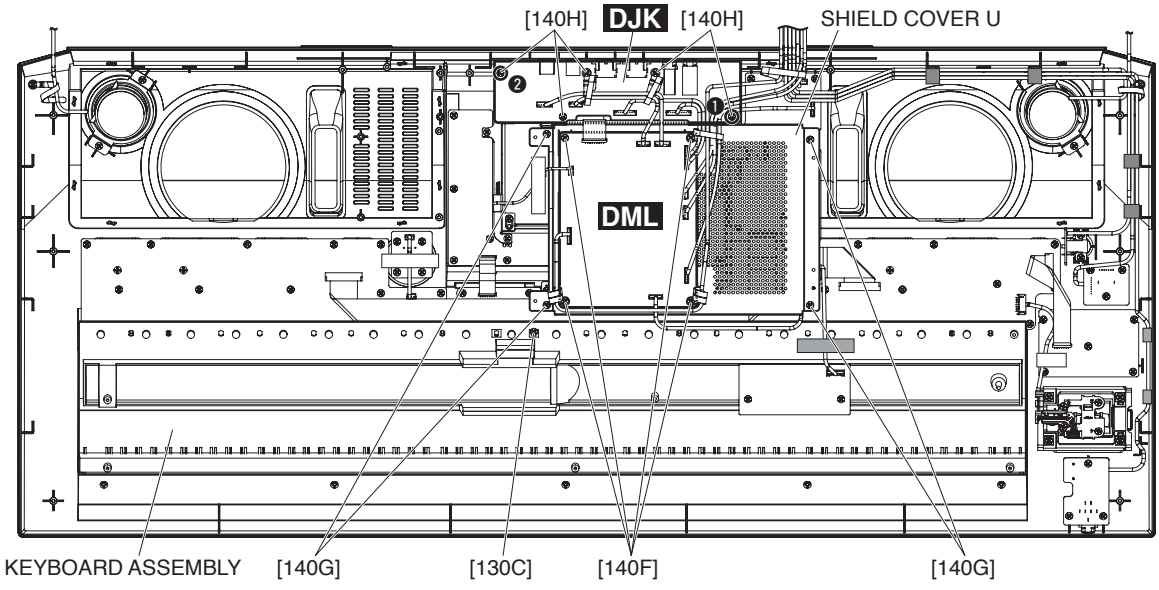

Fig. 6

11. Keyboard Assembly

(Time required: About 8 minutes)

11-1 Remove the lower case assembly. (See procedure 1.)

11-2 Remove the screw marked [130C]. The keyboard assembly can then be removed. (Fig. 6)

12. PNL Circuit Board

(Time required: About 11 minutes)

12-1 Remove the lower case assembly. (See procedure 1.)

12-2 Remove the shield cover U together with the DML circuit board. (See procedure 8-3.)

12-3 Remove the keyboard assembly. (See procedure 11.)

12-4 Remove the screw marked [160]. The DM fixture S can then be removed. (Fig. 8)

12-5 Remove the fourteen (14) screws marked [570B]. The PNL circuit board can then be removed. (Fig. 8)

* ***When installing the PNL circuit board, first tighten the two (2) positioning screws and then the remaining screws. (Fig. 8)***

〈**Bottom view**〉

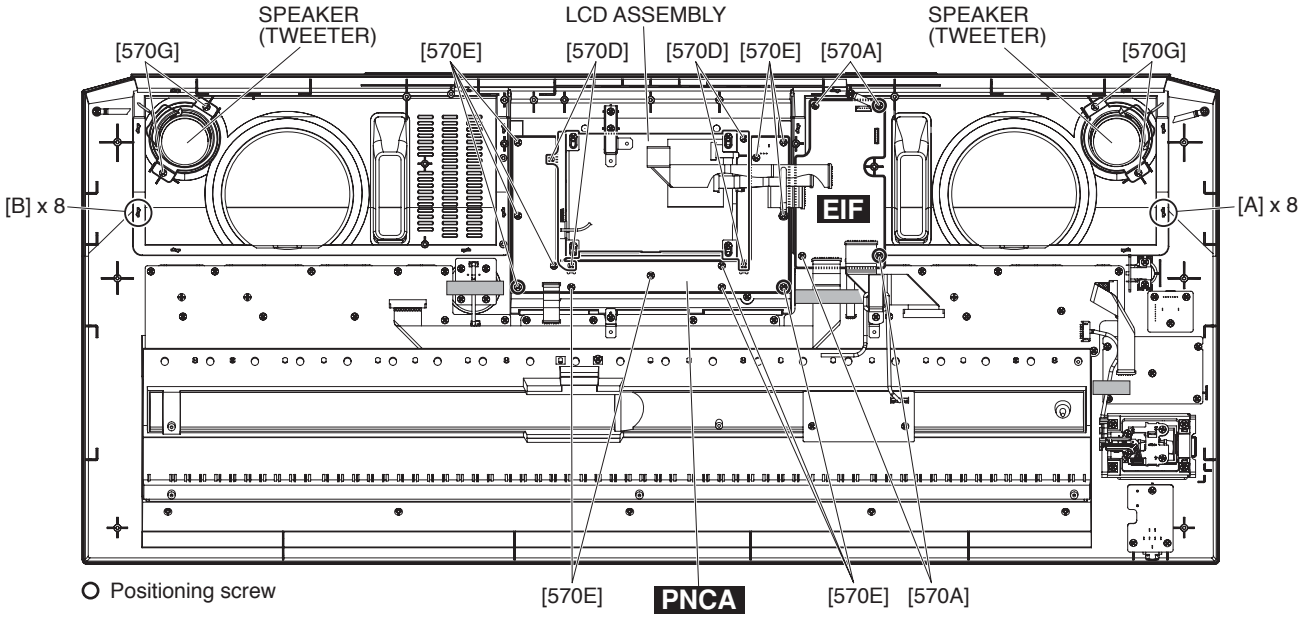

Fig. 7

〈**Bottom view**〉

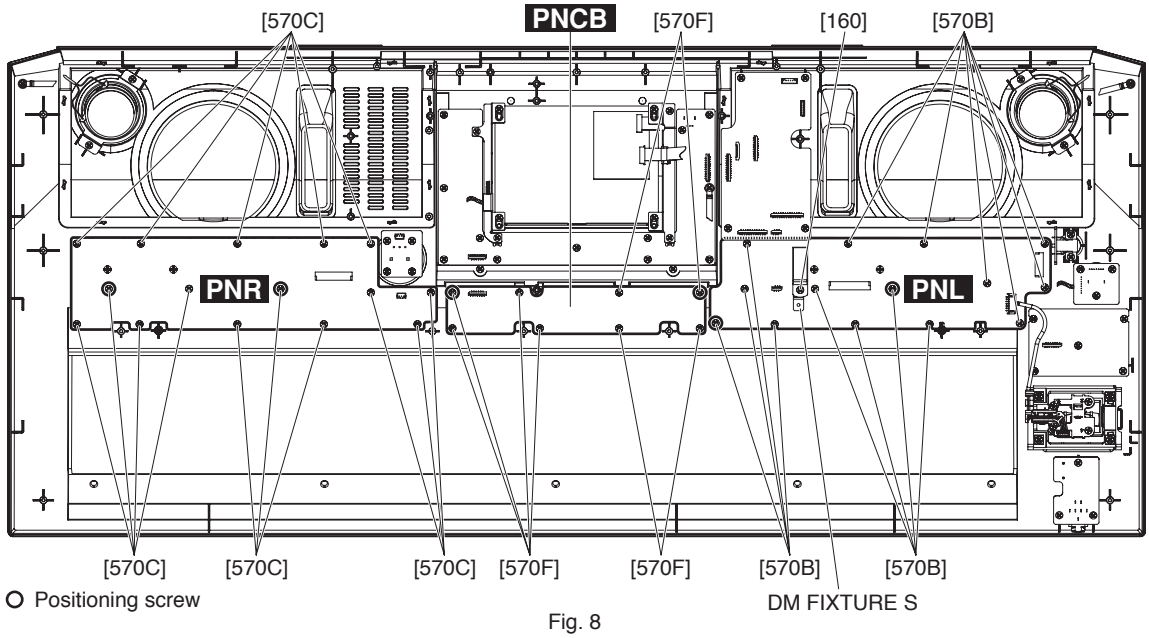

Fig. 8

13. PNR Circuit Board

(Time required: About 10 minutes)

13-1 Remove the lower case assembly. (See procedure 1.)
13-2 Remove the keyboard assembly. (See procedure 11.)
13-3 Remove the fifteen (15) screws marked [570C]. The PNR circuit board can then be removed. (Fig. 8)

* ***When installing the PNR circuit board, first tighten the two (2) positioning screws and then the remaining screws. (Fig. 8)***

14. Crystal Display, PNCA Circuit Board, PNCB Circuit Board

14-1 Remove the lower case assembly. (See procedure 1.)
14-2 Remove the shield cover U together with the DML circuit board. (See procedure 8-3.)

14-3 Crystal Display

(Time required: About 10 minutes)

14-3-1 Remove the DJK circuit board. (See procedure 9.)
14-3-2 Remove the four (4) screws marked [570D]. The LCD assembly can then be removed. (Fig. 7)
14-3-3 Remove the two (2) screws marked [40A]. The crystal display and LCD fixture L can then be separated. (Fig. 9)
14-3-4 Remove the two (2) screws marked [40B]. The crystal display and LCD fixture R can then be separated. (Fig. 9)

* ***When installing the crystal display, first tighten the two (2) positioning screws and then the remaining screws. (Fig. 9)***

* ***The following parts are not components of the crystal display. When replacing the crystal display, remove the following parts from the crystal display and install them to the new crystal display. (Fig. 9)***
· LCD FIXTURE L
· LCD FIXTURE R
· BIND HEAD TAPPING SCREW-B X 4 ([40A], [40B])
· EL ADHESIVE TAPE
· FFC CABLE
· ADHESIVE TAPE
· FILAMENT TAPE

14-4 PNCA Circuit Board

(Time required: About 12 minutes)

14-4-1 Remove the DJK circuit board. (See procedure 9.)
14-4-2 Remove the LCD assembly. (See procedure 14-3-2.)
14-4-3 Remove the twelve (12) screws marked [570E]. The PNCA circuit board can then be removed. (Fig. 7)

* ***When installing the PNCA circuit board, first tighten the two (2) positioning screws and then the remaining screws. (Fig. 7)***

14-5 PNCB Circuit Board

(Time required: About 10 minutes)

14-5-1 Remove the keyboard assembly. (See procedure 11.)
14-5-2 Remove the eight (8) screws marked [570F]. The PNCB circuit board can then be removed. (Fig. 8)

* ***When installing the PNCB circuit board, first tighten the two (2) positioning screws and then the remaining screws. (Fig. 8)***

● **LCD ASSEMBLY**
〈**Bottom view**〉

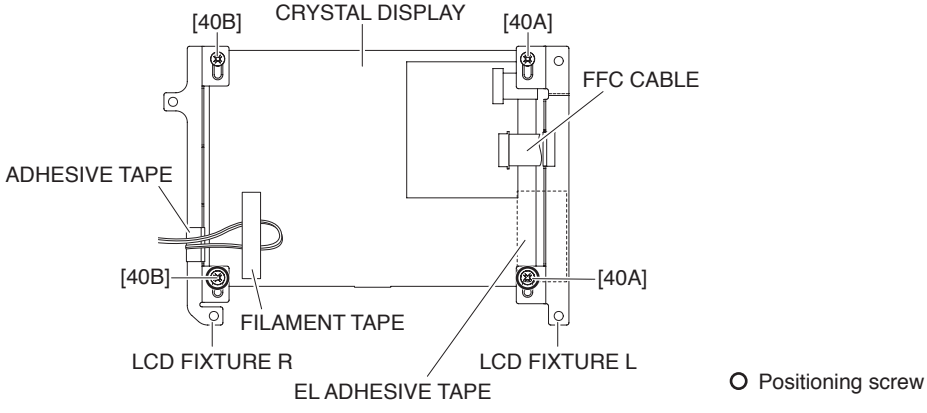

Note: Do not tighten the screws marked [40A] and [40B] with excessive force when assembling the LCD assembly.

Fig. 9

15. Tweeter (Time required: About 8 minutes)

15-1 Remove the lower case assembly. (See procedure 1.)

15-2 Remove the two (2) screws marked [570G]. The tweeter can then be removed. (Fig. 7)

* ***The left and right tweeters can be removed in the same method.***

16. Woofer (Time required: About 8 minutes)

16-1 Remove the lower case assembly. (See procedure 1.)

16-2 Remove the four (4) screws marked [60]. The woofer and four (4) speaker holders can then be removed. (Fig. 10)

* ***The left and right woofers can be removed in the same method.***

17. Speaker Grille Assembly (L) (Time required: About 10 minutes)

17-1 Remove the lower case assembly. (See procedure 1.)

17-2 Remove the shield cover U together with the DML circuit board. (See procedure 8-3.)

17-3 Remove the EIF circuit board. (See procedure 10.)

17-4 Restraighten the eight (8) projections marked [A] to come off the slots of the upper case assembly. (Fig. 7)

17-5 Remove the speaker grille assembly (L). (Fig. 2)

18. Speaker Grille Assembly (R) (Time required: About 9 minutes)

18-1 Remove the lower case assembly. (See procedure 1.)

18-2 Restraighten the eight (8) projections marked [B] to come off the slots of the upper case assembly. (Fig. 7)

18-3 Remove the speaker grille assembly (R). (Fig. 2)

19. AM Circuit Board (Time required: About 9 minutes)

19-1 Remove the lower case assembly. (See procedure 1.)

19-2 Remove the screw marked [80], seven (7) screws marked [90A] and two (2) screws marked [90B]. The AM circuit board can then be removed. (Fig. 10)

* ***When installing the AM circuit board, first tighten the two (2) positioning screws ❶ and ❷ in that order and then the remaining screws. (Fig. 10)***

〈**Rear view**〉

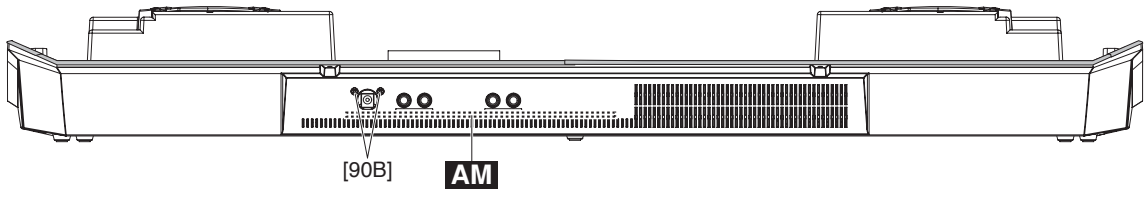

〈**Top view**〉

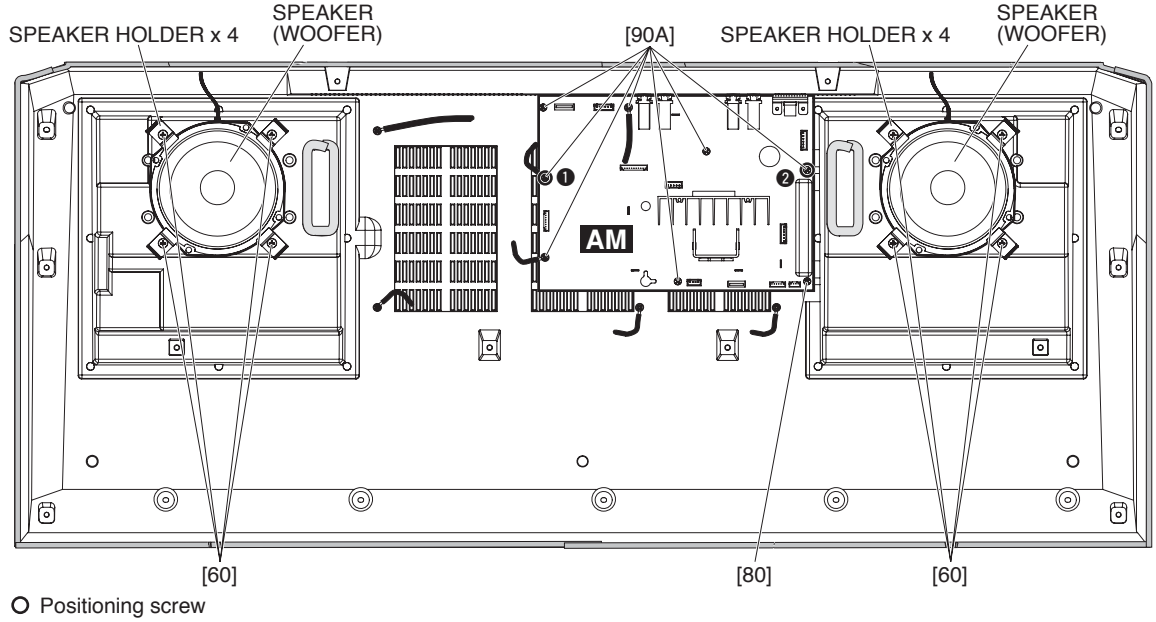

○ Positioning screw

Fig. 10

20. Disassembling the Keyboard Assembly

20-1 Remove the lower case assembly. (See procedure 1.)

20-2 Remove the keyboard assembly. (See procedure 11.)

20-3 **EMKS61A Circuit Board**
(Time required: About 8 minutes)
Remove the two (2) screws marked [30]. The EMKS61A circuit board can then be removed. (Fig. 11)

20-4 **MK-L Circuit Board**
(Time required: About 9 minutes)

20-4-1 Remove the EMKS61A circuit board. (See procedure 20-3.)

20-4-2 Remove the MK-L circuit board while pressing the eight (8) hooks A in the direction of the arrow. (Fig. 12)

20-5 **MK-H Circuit Board**
(Time required: About 9 minutes)

20-5-1 Remove the MK-H circuit board while pressing the seven (7) hooks A in the direction of the arrow. (Fig. 12)

20-6 **Rubber Contact:**

20-6-1 Remove the rubber contact. (Fig. 12, Photo 3)

20-7 **White and Black Keys:**

20-7-1 Remove the twenty-one (21) screws marked [140I], then remove the black keys from the lower notes. (Fig. 13)

20-7-2 Remove the white keys DFA and C'. (Fig. 13)

20-7-3 Remove the while keys CEGB from the higher notes. (Fig. 13)

* ***Lift the front portion of the keys and slide them towards you. The keys can then be removed from the assembly.***

〈**Bottom view**〉

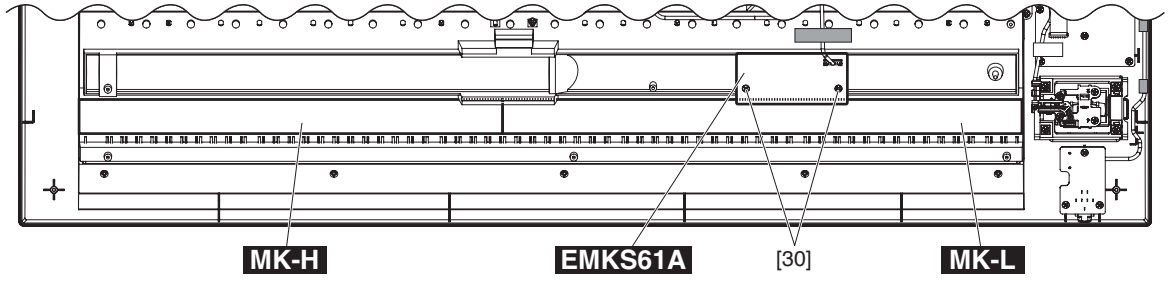

Fig. 11

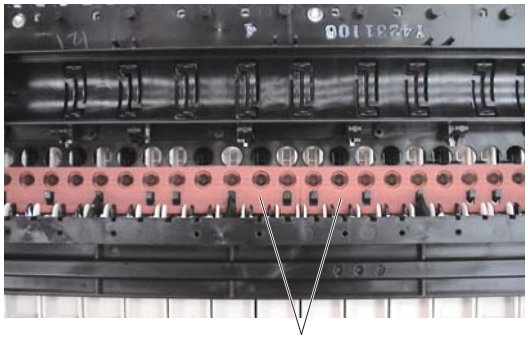

RUBBER CONTACT

Photo 3

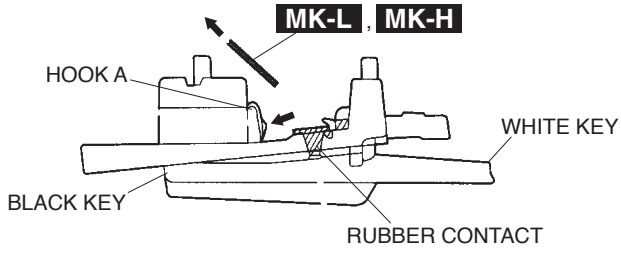

Fig. 12

21. Assembling the Keyboard Assembly

21-1 Install the white keys CEGB from the lower notes. (Fig. 13)

21-2 Install the white keys DFA and C'. (Fig. 13)

21-3 Install the black keys from the higher notes, and tighten the twenty-one (21) screws marked [140I]. (Fig. 13)

* ***To install the white and black keys, insert the projections of the keys into the respective slots [C] on the frame first. (Photo 4, Photo 5, Photo 6)***

21-4 Install the rubber contacts while pulling the keys up. (Fig. 14, Fig. 15)

* ***When fitting the rubber contacts, raise both ends of the frame so that keys do not push the rubber contact up.***

21-5 Install the MK-L and MK-H circuit boards in the assembly so that the hooks B hold it. (Fig. 16)

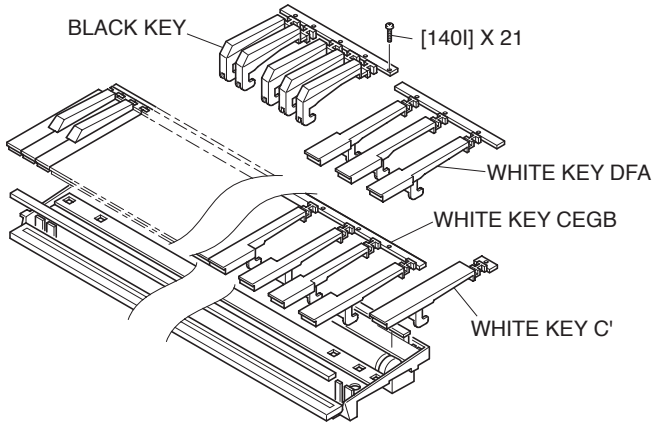

Fig. 13

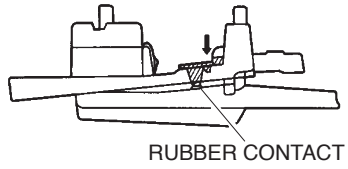

Fig. 15

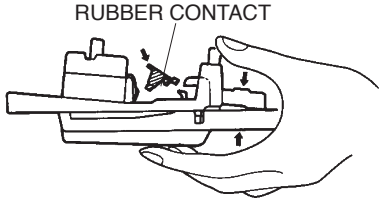

Fig. 14

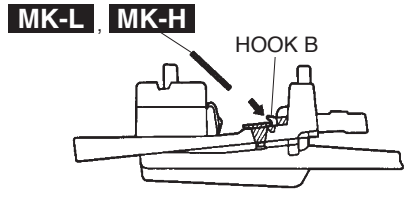

Fig. 16

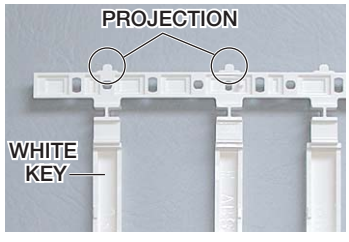

Photo 4

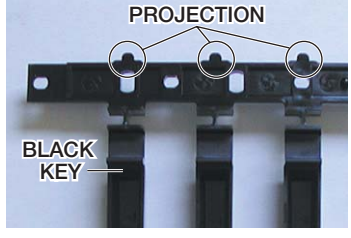

Photo 5

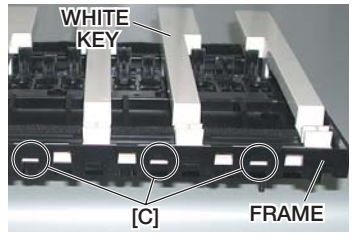

Photo 6

LSI PIN DESCRIPTION

AK4385ET (X6040A01) **DAC** (Digital to Analog Converter) 16
HD6417727F160CV (X2890B00) **CPU** 17
M38044M4-C16FPU0 (X4406101) **LED DRIVER/SWITCH SCAN** 20
MPD6S004S (X4404A01) **DC-DC CONVERTER** 20
T6TJ3XBG-0001 (X8940A00) **SWP51L** (Tone Generator) 18-19
μ**PD780031AYGK-N04** (X003120R) **E-LKS** 16

● **AK4385ET** (X6040A01) **DAC** (Digital to Analog Converter)

DML: IC401

PIN NO.	NAME	I/O	FUNCTION	PIN NO.	NAME	I/O	FUNCTION
1	MCLK	I	Master Clock	9	AOUTR-	O	Rch Analog out(-)
2	BICK	I	Audio Serial Data Clock	10	AOUTR+	O	Rch Analog out(+)
3	SDTI	I	Audio Serial Date Input	11	AOUTL-	O	Lch Analog out(-)
4	LRCK	I	L/R Clock	12	AOUTL+	O	Lch Analog out(+)
5	PDN	I	Power Down mode	13	Vss	-	Ground
6	CSN	I	Chip Select	14	VDD	-	Power Supply
7	CCLK	I	Control Data Input	15	DZFR	O	Rch Data Zero Input Detect
8	CDTI	I	Control Data Input	16	DZFL	O	Lch Data Zero Input Detect

● μ**PD780031AYGK-N04** (X003120R) **E-LKS**

EMKS61A: IC001

PIN NO.	NAME	I/O	FUNCTION	PIN NO.	NAME	I/O	FUNCTION
1	P50/A8	I/O	Port 5 / Higher address bus	33	P10/ANI0	I	Port 1 / A/D converter analog input
2	P51/A9	I/O		34	AV_{REF}	I	A/D converter reference voltage input
3	P52/A10	I/O		35	AV_{DD}	-	Analog power supply
4	P53/A11	I/O		36	$\overline{RESET}$	I	System reset input
5	P54/A12	I/O		37	XT2	-	Subsystem clock oscillation
6	P55/A13	I/O		38	XT1	I	
7	P56/A14	I/O		39	IC	-	Internally connected
8	P57/A15	I/O		40	X2	-	Main system clock oscillation
9	Vss0	-	Ground	41	X1	I	
10	$V_{DD}0$	-	Power supply	42	Vss1	-	Ground
11	P30	I/O	Port 3	43	P00/INTP0	I/O	Port 0 / External interrupt request input
12	P31	I/O		44	P01/INTP1	I/O	
13	P32/SDA0	I/O	Port 3 / Serial data input/output	45	P02/INTP2	I/O	
14	P33/SCL0	I/O	Port 3 / Serial clock input/output	46	P03/INTP3/ADTRG	I/O	Port 0 / External interrupt request input / Trigger signal input
15	P34	I/O	Port 3	47	P70/TI00/TO0	I/O	Port 7 / External count clock input / 16-bit timer/event counter 0 output
16	P35	I/O		48	P71/TI01	I/O	Port 7 / Capture trigger input
17	P36	I/O		49	P72/TI50/TO50	I/O	Port 7 / External count clock input / 8-bit timer/event counter 50 output
18	P20/SI30	I/O	Port 2 / Serial data input	50	P73/TI51/TO51	I/O	Port 7 / External count clock input / 8-bit timer/event counter 51 output
19	P21/SO30	I/O	Port 2 / Serial data output	51	P74/PCL	I/O	Port 7 / Clock output
20	P22/$\overline{SCK30}$	I/O	Port 2 / Serial clock input/output	52	P75/BUZ	I/O	Port 7 / Buzzer output
21	P23RxD0	I/O	Port 2 / Serial data input	53	P64/$\overline{RD}$	I/O	Port 6 / Strobe signal output for reading
22	P24/TxD0	I/O	Port 2 / Serial data output	54	P65/$\overline{WR}$	I/O	Port 6 / Strobe signal output for writing
23	P25/ASCK0	I/O	Port 2 / Serial clock input/output	55	P66/$\overline{WAIT}$	I/O	Port 6 / Wait insertion
24	$V_{DD}1$	-	Power supply	56	P67/ASTB	I/O	Port 6 / Strobe output
25	AVss	-	Ground	57	P40/AD0	I/O	Port 4 / Lower address/data bus
26	P17/ANI7	I	Port 1 / A/D converter analog input	58	P41/AD1	I/O	
27	P16/ANI6	I		59	P42/AD2	I/O	
28	P15/ANI5	I		60	P43/AD3	I/O	
29	P14/ANI4	I		61	P44/AD4	I/O	
30	P13/ANI3	I		62	P45/AD5	I/O	
31	P12/ANI2	I		63	P46/AD6	I/O	
32	P11/ANI1	I		64	A47/AD7	I/O	

● HD6417727F160CV (X2890B00) CPU

DML: IC3

PIN NO.	NAME	I/O	FUNCTION	PIN NO.	NAME	I/O	FUNCTION
1	Vcc-RTC	-	Power supply for RTC (1.9V)	121	PTM[4]/PINT[4]/AFE_RDET_/USB1d_TXDMNS	I	Not in use
2	XTAL2	-	Not in use (XTAL for internal RTC)	122	Reserved/USB1d_SUSPEND	O	
3	EXTAL2	-		123	USB1_ovr_crnt/USBF_VBUS	I	USB function VBUS
4	Vss-RTC	-	Power supply for RTC (0V)	124	USB2_ovr_crnt_	-	USB2_HOST2 over current detection
5	MD1	-	Clock mode setting	125	RTS2_/USB1d_TXENL	O	Not in use
6	MD2	-		126	PTE[2]/USB1_pwr_en	O	USB1 voltage control
7	NMI	-	Not in use (Non-maskable interrupt request)	127	PTE[1]/USB2_pwr_en	O	USB2 voltage control
8	IRQ0/IRL0_/PTH[0]	I	External interrupt request	128	CKE/PTK[5]	O	Enable (SDRAM)
9	IRQ1/IRL1_/PTH[1]	I		129	/RAS3/PTJ[0]	O	RAS for SDRAM
10	IRQ2/IRL2_/PTH[2]	I		130	Reserved/PTJ[1]	O	Not in use
11	IRQ3/IRL3_/PTH[3]	I		131	Reserved//CAS/PTJ[2]	O	CAS for SDRAM
12	IRQ4/PTH[4]	I		132	VssQ	-	VssQ
13	VEPWC	O	VEE control pin for LCD panel	133	Reserved/PTJ[3]	O	Output port (DAC Reset)
14	VCPWC	-	VCC control pin for LCD panel	134	VccQ	-	VccQ
15	MD5	-	Big endian setting	135	Reserved/PTJ[4]	O	Output port (SIO Reset)
16	/BREQ	-	Not in use (bus request)	136	Reserved/PTJ[5]	O	Output port (DAC Mute)
17	/BACK	-	Bus acknowledge	137	Vss	-	Vss
18	VssQ	-	VssQ	138	PTD[5]/CL1	O	LCD line clock
19	CKIO2	-	System clock output	139	Vcc	-	Vcc
20	VccQ	-	VccQ	140	PTD[7]/DON	O	LCD DISPLAY ON
21	D31/PTB[7]	I/O	Data bus	141	PTE[6]/M_DISP	O	LCD alternater
22	D30/PTB[6]	I/O		142	PTE[3]/FLM	O	LCD frame line marker
23	D29/PTB[5]	I/O		143	PTE[0]/TDO	O	JTAG (test data output)
24	D28/PTB[4]	I/O		144	PCC0RESET/DRACK0	O	DMA request acceptance
25	D27/PTB[3]	I/O		145	PCC0DRV_/DACK0_	O	DMA acknowledge
26	D26/PTB[2]	I/O		146	/WAIT	-	Hardware wait request
27	D25/PTB[1]	I/O		147	/RESETM	-	Manual reset request
28	D24/PTB[0]	I/O		148	/ADTRG/PTH[5]	I	Analog A/D trigger
29	VssQ	-	VssQ	149	/IOIS16/PTG[7]	I	Not in use
30	D23/PTA[7]	I/O	Data bus	150	/ASEMD0	-	
31	VccQ	-	VccQ	151	PTG[5]/ASEBRKAK_		
32	D22/PTA[6]	I/O	Data bus	152	PTG[4]	I	
33	D21/PTA[5]	I/O		153	PCC0BVD2/PTG[3]/AUDATA[3]	I	
34	D20/PTA[4]	I/O		154	PCC0BVD1/PTG[2]/AUDATA[2]	I	
35	Vss	-	Vss	155	Vss	-	Vss
36	D19/PTA[3]	I/O	Data bus	156	PCC0CD2/PTG[1]/AUDATA[1]	I	Not in use
37	Vcc	-	Vcc	157	Vcc	-	Vcc
38	D18/PTA[2]	I/O	Data bus	158	PCC0CD1/PTG[0]/AUDATA[0]	I	Not in use
39	D17/PTA[1]	I/O		159	VssQ	-	VssQ
40	D16/PTA[0]	I/O		160	PTF[7]/PINT[15]/TRST_	I	Not in use
41	D15	-		161	VccQ	-	VccQ
42	VssQ	-	VssQ	162	PTF[6]/PINT[14]/TMS	I	Not in use
43	D14	-	Data bus	163	PTF[5]/PINT[13]/TDI	I	
44	VccQ	-	VccQ	164	PTF[4]/PINT[12]/TCK	I	
45	D13	-	Data bus	165	PTF[3]/PINT[11]/Reserved	I	
46	D12	-		166	PCCREG_/PTF[2]/Reserved	I	
47	D11	-		167	PCC0VS1_/PTF[1]/Reserved	I	
48	D10	-		168	PCC0VS2_/PTF[0]/Reserved	I	
49	D9	-		169	MD0	-	Clock mode setting
50	D8	-		170	Vcc-PLL1	-	Power supply for Vcc_PLL1 - PLL1(1.9V)
51	D7	-		171	CAP1	-	External capacitance for CAP1 _ PLL1
52	D6	-		172	Vss-PLL1	-	Power supply for Vss_PLL1 _ PLL1(0V)
53	VssQ	-	VssQ	173	Vss-PLL2	-	Power supply for Vss_PLL2 _ PLL2 (0V)
54	D5	-	Data bus	174	CAP2	-	External capacitance for CAP2 _ PLL2
55	VccQ	-	VccQ	175	Vcc-PLL2	-	Power supply for Vcc_PLL2 _ PLL2 (1.9V)
56	D4	-	Data bus	176	PCC0WAIT_/PTH[6]/AUDCK	I	Not in use
57	D3	-		177	Vss	-	Vss
58	D2	-		178	Vcc	-	Vcc
59	D1	-		179	XTAL	-	Clock oscillator
60	D0	-		180	EXTAL	-	External clock
61	A0	-	Address bus	181	LCD15/PTM[3]/PINT[10]	I	Not in use
62	A1	-		182	LCD14/PTM[2]/PINT[9]	I	
63	A2	-		183	LCD13/PTM[1]/PINT[8]	I	
64	VssQ	-	VssQ	184	LCD12/PTM[0]	I	Input port (Flash ROM RY/BY)
65	A3	-	Address bus	185	STATUS0/PTJ[6]	O	Output port (Flash ROM write protect)
66	VccQ	-	VccQ	186	STATUS1/PTJ[7]	O	Output port (Flash ROM ACC)
67	A4	-	Address bus	187	CL2/PTH[7]	O	LCD clock output
68	A5	-		188	VssQ	-	VssQ
69	A6	-		189	CKIO	-	System clock input/output (for SDRAM)
70	A7	-		190	VccQ	-	VccQ
71	A8	-		191	TxD0/SCPT[0]	O	Output port for SCI
72	A9	-		192	SCK0/SCPT[1]	O	Not in use
73	A10	-		193	TxD_SIO/SCPT[2]	O	
74	A11	-		194	SIOMCLK/SCPT[3]	O	
75	VssQ	-	VssQ	195	TxD2/SCPT[4]	O	Output port for SCI
76	A12	-	Address bus	196	SCK_SIO/SCPT[5]	O	Not in use
77	VccQ	-	VccQ	197	SIOFSYNC/SCPT[6]	O	
78	A13	-	Address bus	198	RxD0/SCPT[0]	i	Receiving data 0
79	A14	-		199	RxD_SIO/SCPT[2]	i	Not in use
80	A15	-		200	Vss	-	Vss
81	A16	-		201	RxD2/SCPT[4]	i	Receiving data 2
82	A17	-		202	Vcc	-	Vcc
83	A18	-		203	SCPT[7]/CTS2_/IRQ5	I	Not in use
84	A19	-		204	LCD11/PTC[7]/PINT[3]	O	Output port (PLG CLOCK ON/OFF)
85	A20	-		205	LCD10/PTC[6]/PINT[2]	O	Not in use
86	VssQ	-	VssQ	206	LCD9/PTC[5]/PINT[1]	O	
87	A21	-	Address bus	207	VssQ	-	VssQ
88	VccQ	-	VccQ	208	LCD8/PTC[4]/PINT[0]	O	Not in use
89	A22	-	Address bus	209	VccQ	-	VccQ
90	A23	-		210	LCD7/PTD[3]	O	LCD DATA7
91	Vss	-	Vss	211	LCD6/PTD[2]	O	LCD DATA6
92	A24	-	Address bus	212	LCD5/PTC[3]	O	LCD DATA5
93	Vcc	-	Vcc	213	LCD4/PTC[2]	O	LCD DATA4
94	A25	-	Address bus	214	LCD3/PTC[1]	O	LCD DATA3
95	BS_/PTK[4]	O	Not connected (bus cycle start signal)	215	LCD2/PTC[0]	O	LCD DATA2
96	RD_	-	Read strobe	216	LCD1/PTD[1]	O	LCD DATA1
97	WE0_/DQMLL	O	Write 0 signal	217	LCD0/PTD[0]	O	LCD DATA0
98	WE1_/DQMLU/WE	O	Write 1 signal	218	DREQ0_/PTD[4]	I	DMA request
99	WE2_/DQMUL/ICIORD_/PTK[6]	O	Write 2 signal	219	LCK/UCLK/PTD[6]	I	USB clock
100	VssQ	-	VssQ	220	/RESETP	-	Power on reset request
101	WE3_/DQMUU/ICIOWR_/PTK{7}	O	Write 3 signal	221	CA	-	Hardware standby request
102	VccQ	-	VccQ	222	MD3	-	Bus width setting for area0
103	RD/WR_	O	Read/Write	223	MD4	-	
104	PTE[7]/PCC0RDY/AUDSYNC_	O	I/O	224	/Scan_testen	-	Test pin (fixed to 3.3V)
105	/CS0	-	Chip Select 0	225	Avcc_USB	-	USB analog power supply (3.3V)
106	/CS2	-	Chip Select 2	226	USB1_P	IO	USB1 data input/output (+)
107	/CS3	-	Chip Select 3	227	USB1_M	IO	USB1 data input/output (-)
108	/CS4/PTK[2]	O	Chip Select 4	228	Avss_USB	-	USB analog power supply (0V)
109	/CS5/CE1A_/PTK[3]	O	Chip Select 5	229	USB2_P	IO	USB2 data input/output (+)
110	/CS6/CE1B_	O	Chip Select 6	230	USB2_M	IO	USB2 data input/output (-)
111	CE2A_/PTE[4]	O	Output port (SWP50 Reset)	231	Avcc_USB	-	USB analog power supply (3.3V)
112	CE2B_/PTE[5]	O	Output port (PLG Board Reset)	232	Avss	-	A/D analog power supply (0V)
113	AFE_HC1/USB1d_DPLS/PTK[0]	O	SPD DATA	233	AN[2]/PTL[2]	I	AD converter input
114	AFE_RLYCNT_/USB1d_DMNS/PTK[1]	O	SPD CL	234	AN[3]/PTL[3]	I	
115	VssQ	-	VssQ	235	AN[4]/PTL[4]	I	
116	AFE_SCLK/USB1d_TXDPLS	I	Not in use (USB1 D+ transmission)	236	AN[5]/PTL[5]	I	
117	VccQ	-	VccQ	237	Avcc	-	A/D analog power supply (3.3V)
118	PTM[7]/PTINT[7]/AFE_FS/USB1d_RCV	I	Not in use	238	AN[6]/PTL[6]/DA[1]	I	AD converter input
119	PTM[6]/PTINT[6]/AFE_RXIN/USB1d_SPEED	I		239	AN[7]/PTL[7]/DA[0]	O	DA converter output (LCD contrast)
120	PTM[5]/PTINT[5]/AFE_TXOUT/USB1d_TXSE0	I		240	Avss	-	A/D analog power supply (0V)

● T6TJ3XBG-0001 (X8940A00) SWP51L (Tone Generator)

DML: IC304

PIN NO.	OUTER NO.	NAME	I/O	FUNCTION	PIN NO.	OUTER NO.	NAME	I/O	FUNCTION
1	A1	VSS	-	Ground	98	D20	VDDC	-	Power supply +1.5 V
2	A2	VSS	-		99	D21	VDDC	-	
3	A3	HRD2	I/O	DRAM data bus	100	D22	VSS	-	Ground
4	A4	HRD0	I/O		101	D23	VSS	-	
5	A5	HRD9	I/O		102	D24	CD14	I/O	Data bus of internal register
6	A6	HRD11	I/O		103	D25	CD13	I/O	
7	A7	HRD13	I/O		104	D26	CD12	I/O	
8	A8	HRD15	I/O		105	E1	ACLK	I/O	Clock signal (ABUS)
9	A9	RA1	O	DRAM address bus	106	E2	ADIR	O	Direction signal (ABUS)
10	A10	RA3	O		107	E3	ADAT15	I/O	Data bus (ABUS)
11	A11	RA5	O		108	E4	VSS	-	Ground
12	A12	RA7	O		109	E23	VSS	-	
13	A13	RA9	O		110	E24	CD11	I/O	Data bus of internal register
14	A14	RCLK	O	SDRAM clock signal	111	E25	CD10	I/O	
15	A15	RRAS	O	DRAM row address strobe (RAS signal)	112	E26	CD9	I/O	
16	A16	RWEN	O	DRAM write enable	113	F1	MELI7	I	MEL wave data input
17	A17	LRD8	I/O	DRAM data bus (Lower data)	114	F2	DITo	O	Digital audio output
18	A18	LRD10	I/O		115	F3	AFRM	I/O	Frame signal (ABUS)
19	A19	LRD12	I/O		116	F4	VDDC	-	Power supply +1.5 V
20	A20	LRD14	I/O		117	F23	VDDS	-	Power supply +3.3 V
21	A21	LRD7	I/O		118	F24	CD8	I/O	Data bus of internal register
22	A22	LRD5	I/O		119	F25	CD7	I/O	
23	A23	LRD3	I/O		120	F26	CD6	I/O	
24	A24	LRD1	I/O		121	G1	MELI4	I	MEL wave data input
25	A25	VSS	-	Ground	122	G2	MELI5	I	
26	A26	VSS	-		123	G3	MELI6	I	
27	B1	VSS	-		124	G4	VDDC	-	Power supply +1.5 V
28	B2	VSS	-		125	G23	VDDS	-	Power supply +3.3 V
29	B3	HRD3	I/O	DRAM data bus	126	G24	CD5	I/O	Data bus of internal register
30	B4	HRD1	I/O		127	G25	CD4	I/O	
31	B5	HRD8	I/O		128	G26	CD3	I/O	
32	B6	HRD10	I/O		129	H1	MELI1	I	MEL wave data input
33	B7	HRD12	I/O		130	H2	MELI2	I	
34	B8	HRD14	I/O		131	H3	MELI3	I	
35	B9	RA0	O	DRAM address bus	132	H4	VDDC	-	Power supply +1.5 V
36	B10	RA2	O		133	H23	VDDS	-	Power supply +3.3 V
37	B11	RA4	O		134	H24	CD2	I/O	Data bus of internal register
38	B12	RA6	O		135	H25	CD1	I/O	
39	B13	RA8	O		136	H26	CD0	I/O	
40	B14	RCLKE	O	SDRAM clock enable	137	J1	BCLK	O	Master clock (64 Fs)
41	B15	RCAS	O	DRAM column address strobe (CAS signal)	138	J2	ADLR	O	For ADC word clock
42	B16	RQML	O	MASK signal (SDRAM)	139	J3	MELI0	I	MEL wave data input
43	B17	LRD9	I/O	DRAM data bus (Lower data)	140	J4	VDDC	-	Power supply +1.5 V
44	B18	LRD11	I/O		141	J23	VDDS	-	Power supply +3.3 V
45	B19	LRD13	I/O		142	J24	CA0	I	Address bus of internal register
46	B20	LRD15	I/O		143	J25	CA1	I	
47	B21	LRD6	I/O		144	J26	CA2	I	
48	B22	LRD4	I/O		145	K1	WCLK0	O	For DAC word clock
49	B23	LRD2	I/O		146	K2	CK512	O	Master clock (512 Fs)
50	B24	LRD0	I/O		147	K3	CK128	O	Master clock (256 Fs)
51	B25	VSS	-	Ground	148	K4	VDDC	-	Power supply +1.5 V
52	B26	VSS	-		149	K23	VDDS	-	Power supply +3.3 V
53	C1	HRD5	I/O	DRAM data bus	150	K24	CA3	I	Address bus of internal register
54	C2	HRD4	I/O		151	K25	CA4	I	
55	C3	VSS	-	Ground	152	K26	CA5	I	
56	C4	ADAT13	I/O	Data bus (ABUS)	153	L1	MELO6	O	MEL wave data output
57	C5	ADAT12	I/O		154	L2	MELO7	O	
58	C6	ADAT11	I/O		155	L3	WCLK1	O	For DAC word clock
59	C7	ADAT10	I/O		156	L4	VDDC	-	Power supply +1.5 V
60	C8	ADAT9	I/O		157	L11	VSS	-	Ground
61	C9	ADAT8	I/O		158	L12	VSS	-	
62	C10	ADAT7	I/O		159	L13	VSS	-	
63	C11	RA10	O	DRAM address bus	160	L14	VSS	-	
64	C12	RA11	O		161	L15	VSS	-	
65	C13	RA12	O		162	L16	VSS	-	
66	C14	RA13	O		163	L23	VDDS	-	Power supply +3.3 V
67	C15	RQMH	O	MASK signal (SDRAM)	164	L24	CA6	I	Address bus of internal register
68	C16	RCLKIN	I	SDRAM, DRAM clock input	165	L25	CA7	I	
69	C17	ADAT6	I/O	Data bus (ABUS)	166	L26	CA8	I	
70	C18	ADAT5	I/O		167	M1	MELO3	O	MEL wave data output
71	C19	ADAT4	I/O		168	M2	MELO4	O	
72	C20	ADAT3	I/O		169	M3	MELO5	O	
73	C21	ADAT2	I/O		170	M4	VDDC	-	Power supply +1.5 V
74	C22	ADAT1	I/O		171	M11	VSS	-	Ground
75	C23	ADAT0	I/O		172	M12	VSS	-	
76	C24	VSS	-	Ground	173	M13	VSS	-	
77	C25	VSS	-		174	M14	VSS	-	
78	C26	CD15	I/O	Data bus of internal register	175	M15	VSS	-	
79	D1	HRD7	I/O	DRAM data bus	176	M16	VSS	-	
80	D2	HRD6	I/O		177	M23	VDDS	-	Power supply +3.3 V
81	D3	ADAT14	I/O	Data bus (ABUS)	178	M24	CA9	I	Address bus of internal register
82	D4	VSS	-	Ground	179	M25	CA10	I	
83	D5	VSS	-		180	M26	CA11	I	
84	D6	VDDS	-	Power supply +3.3 V	181	N1	MELO0	O	MEL wave data output
85	D7	VDDS	-		182	N2	MELO1	O	
86	D8	VDDS	-		183	N3	MELO2	O	
87	D9	VDDS	-		184	N4	VDDC	-	Power supply +1.5 V
88	D10	VDDS	-		185	N11	VSS	-	Ground
89	D11	VDDS	-		186	N12	VSS	-	
90	D12	VDDS	-		187	N13	VSS	-	
91	D13	VDDS	-		188	N14	VSS	-	
92	D14	VDDC	-	Power supply +1.5 V	189	N15	VSS	-	
93	D15	VDDC	-		190	N16	VSS	-	
94	D16	VDDC	-		191	N23	PLL_AVS	-	Analog ground (PLL)
95	D17	VDDC	-		192	N24	CA12	I	Address bus of internal register
96	D18	VDDC	-		193	N25	CA13	I	
97	D19	VDDC	-		194	N26	CA14	I	

PIN NO.	OUTER NO.	NAME	I/O	FUNCTION	PIN NO.	OUTER NO.	NAME	I/O	FUNCTION
195	P1	LMD11	I/O	Wave memory data bus (Lower 16 bit)	292	AC8	VDDC	-	Power supply +1.5 V
196	P2	LMD4	I/O		293	AC9	VDDC	-	
197	P3	LMD3	I/O		294	AC10	VDDC	-	
198	P4	VDDS	-	Power supply +3.3 V	295	AC11	VDDC	-	
199	P11	VSS	-	Ground	296	AC12	VDDC	-	
200	P12	VSS	-		297	AC13	VDDC	-	
201	P13	VSS	-		298	AC14	VDDS	-	Power supply +3.3 V
202	P14	VSS	-		299	AC15	VDDS	-	
203	P15	VSS	-		300	AC16	VDDS	-	
204	P16	VSS	-		301	AC17	VDDS	-	
205	P23	PLL_AVD	-	Analog power supply +1.5 V (PLL)	302	AC18	VDDS	-	
206	P24	CA15	I	Address bus of internal register	303	AC19	VDDS	-	
207	P25	XI	I	Crystal oscillator input	304	AC20	VDDS	-	
208	P26	XO	O	Crystal oscillator output	305	AC21	VDDS	-	
209	R1	LMD12	I/O	Wave memory data bus (Lower 16 bit)	306	AC22	VSS	-	Ground
210	R2	LMD10	I/O		307	AC23	VSS	-	
211	R3	LMD5	I/O		308	AC24	TEST1	I	Test pin
212	R4	VDDS	-	Power supply +3.3 V	309	AC25	SYI	I	Synchronous clock
213	R11	VSS	-	Ground	310	AC26	ESCL	I/O	E bus clock
214	R12	VSS	-		311	AD1	LMA19	O	Wave memory address bus (Lower data memory)
215	R13	VSS	-		312	AD2	LMA3	O	
216	R14	VSS	-		313	AD3	VSS	-	Ground
217	R15	VSS	-		314	AD4	LMA17	O	Wave memory address bus (Lower data memory)
218	R16	VSS	-		315	AD5	LMA6	O	
219	R23	VDDC	-	Power supply +1.5 V	316	AD6	LMA8	O	
220	R24	PLL_TSTN	I	Test pin	317	AD7	LMA13	O	
221	R25	RFCLKi	I	PLL Clock	318	AD8	LMA11	O	
222	R26	RFCLKo	O		319	AD9	HMD11	I/O	Wave memory data bus (Upper data memory)
223	T1	LMD2	I/O	Wave memory data bus (Lower 16 bit)	320	AD10	HMD12	I/O	
224	T2	LMD13	I/O		321	AD11	HMD2	I/O	
225	T3	LMD6	I/O		322	AD12	HMD9	I/O	
226	T4	VDDS	-	Power supply +3.3 V	323	AD13	HMD7	I/O	
227	T11	VSS	-	Ground	324	AD14	HMA29	O	Wave memory address bus (Upper data memory)
228	T12	VSS	-		325	AD15	HMA26	O	
229	T13	VSS	-		326	AD16	HMA24	O	
230	T14	VSS	-		327	AD17	HMA21	O	
231	T15	VSS	-		328	AD18	HMA2	O	
232	T16	VSS	-		329	AD19	HMA18	O	
233	T23	VDDC	-	Power supply +1.5 V	330	AD20	HMA5	O	
234	T24	CSN1	I	Chip select	331	AD21	HMA7	O	
235	T25	CSN0	I		332	AD22	HMA14	O	
236	T26	PLL_BP	I	Test pin	333	AD23	HMA10	O	
237	U1	LMD9	I/O	Wave memory data bus (Lower 16 bit)	334	AD24	VSS	-	Ground
238	U2	LMD14	I/O		335	AD25	VSS	-	
239	U3	LMD1	I/O		336	AD26	SYO	O	Synchronous clock
240	U4	VDDS	-	Power supply +3.3 V	337	AE1	VSS	-	Ground
241	U23	VDDC	-	Power supply +1.5 V	338	AE2	VSS	-	
242	U24	TRST	I	Test pin	339	AE3	LMA18	O	Wave memory address bus (Lower data memory)
243	U25	RDN	I	Read strobe	340	AE4	LMA5	O	
244	U26	WRN	I	Write strobe	341	AE5	LMA7	O	
245	V1	LMD7	I/O	Wave memory data bus (Lower 16 bit)	342	AE6	LMA14	O	
246	V2	LMD8	I/O		343	AE7	LMA10	O	
247	V3	LMD15	I/O		344	AE8	MWEN	O	Wave memory write enable
248	V4	VDDS	-	Power supply +3.3 V	345	AE9	HMD4	I/O	Wave memory data bus (Upper data memory)
249	V23	VDDC	-	Power supply +1.5 V	346	AE10	HMD10	I/O	
250	V24	TCK	I	Test pin	347	AE11	HMD13	I/O	
251	V25	DREQo	O	DMA request	348	AE12	HMD14	I/O	
252	V26	WAITo	O	Hardware wait request	349	AE13	HMD8	I/O	
253	W1	LMD0	I/O	Wave memory data bus (Lower 16 bit)	350	AE14	HMA30	O	Wave memory address bus (Lower data memory)
254	W2	LMA30	O	Wave memory address bus (Lower data memory)	351	AE15	HMA27	O	
255	W3	LMA29	O		352	AE16	HMA0	O	
256	W4	VDDS	-	Power supply +3.3 V	353	AE17	HMA23	O	
257	W23	VDDC	-	Power supply +1.5 V	354	AE18	HMA20	O	
258	W24	TMS	I	Test pin	355	AE19	HMA3	O	Wave memory address bus (Upper data memory)
259	W25	SLAVE	I	Master/Slave select	356	AE20	HMA17	O	
260	W26	IRQo	O	Interrupt request	357	AE21	HMA6	O	
261	Y1	LMA28	O	Wave memory address bus (Lower data memory)	358	AE22	HMA8	O	
262	Y2	LMA27	O		359	AE23	HMA13	O	
263	Y3	LMA26	O		360	AE24	HMA11	O	
264	Y4	VDDS	-	Power supply +3.3 V	361	AE25	VSS	-	Ground
265	Y23	VDDC	-	Power supply +1.5 V	362	AE26	VSS	-	
266	Y24	TDI	I	Test pin	363	AF1	VSS	-	
267	Y25	KONTRGi	I	Key on data	364	AF2	VSS	-	
268	Y26	ICN	I	Initial clear	365	AF3	LMA4	O	Wave memory address bus (Lower data memory)
269	AA1	LMA25	O	Wave memory address bus (Lower data memory)	366	AF4	LMA16	O	
270	AA2	LMA0	O		367	AF5	LMA15	O	
271	AA3	LMA24	O		368	AF6	LMA9	O	
272	AA4	VDDS	-	Power supply +3.3 V	369	AF7	LMA12	O	
273	AA23	VDDC	-	Power supply +1.5 V	370	AF8	MOEN	O	Wave memory output enable
274	AA24	TDO	O	Test pin	371	AF9	HMD3	I/O	Wave memory data bus (Upper data memory)
275	AA25	EIRQ	O	E bus interrupt request	372	AF10	HMD5	I/O	
276	AA26	KONTRGo	O	Key on data	373	AF11	HMD6	I/O	
277	AB1	LMA22	O	Wave memory address bus (Lower data memory)	374	AF12	HMD1	I/O	
278	AB2	LMA23	O		375	AF13	HMD15	I/O	
279	AB3	LMA21	O		376	AF14	HMD0	I/O	
280	AB4	VSS	-	Ground	377	AF15	HMA28	O	Wave memory address bus (Upper data memory)
281	AB23	VSS	-		378	AF16	HMA25	O	
282	AB24	TMODE	I	Test pin	379	AF17	HMA22	O	
283	AB25	ESDA	I/O	E bus data	380	AF18	HMA1	O	
284	AB26	EICN	O	E bus initial clear	381	AF19	HMA19	O	
285	AC1	LMA1	O	Wave memory address bus (Lower data memory)	382	AF20	HMA4	O	
286	AC2	LMA20	O		383	AF21	HMA16	O	
287	AC3	LMA2	O		384	AF22	HMA15	O	
288	AC4	VSS	-	Ground	385	AF23	HMA9	O	
289	AC5	VSS	-		386	AF24	HMA12	O	
290	AC6	VDDC	-	Power supply +1.5 V	387	AF25	VSS	-	Ground
291	AC7	VDDC	-		388	AF26	VSS	-	

● M38044M4-C16FPU0 (X4406101) LED DRIVER/SWITCH SCAN

EIF: IC201

PIN NO.	NAME	I/O	FUNCTION	PIN NO.	NAME	I/O	FUNCTION
1	P62/AN2	I/O	Port6 / A-D converter input	33	P17	I/O	Port1
2	P61/AN1	I/O		34	P16	I/O	
3	P60/AN0	I/O		35	P15	I/O	
4	P57/INT3	I/O	Port5 / Interrupt input	36	P14	I/O	
5	P56/PWM	I/O	Port5 / PWM output	37	P13	I/O	
6	P55/CNTR1	I/O	Port5 / Timer Y	38	P12	I/O	
7	P54/CNTR0	I/O	Port5 / Timer X	39	P11/INT01	I/O	Port1 / Interrupt input
8	P53/SRDY2	I/O	Port5 / Serial ready	40	P10/INT41	I/O	
9	P52/SCLK2	I/O	Port5 / Serial clock	41	P07/AN15	I/O	Port0 / A-D converter input
10	P51/SOUT2	I/O	Port5 / Serial output	42	P06/AN14	I/O	
11	P50/SIN2	I/O	Port5 / Serial input	43	P05/AN13	I/O	
12	P47/SRDY1/CNTR2	I/O	Port4 / Serial ready / Timer Z	44	P04/AN12	I/O	
13	P46/SCLK1	I/O	Port4 / Serial clock	45	P03/AN11	I/O	
14	P45/TxD1	I/O	Port4 / Transmit data	46	P02/AN10	I/O	
15	P44/RxD1	I/O	Port4 / Receive data	47	P01/AN9	I/O	
16	P43/INT2	I/O	Port4 / Interrupt input	48	P00/AN8	I/O	
17	P42/INT1	I/O		49	P37/SRDY3	I/O	Port3 / Serial ready
18	CNVSS	I	Ground	50	P36/SCLK3	I/O	Port3 / Serial clock
19	RESET	I	Reset input	51	P35/TxD3	I/O	Port3 / Transmit data
20	P41/INT00/XCIN	I/O	Port4 / Interrupt input / Sub-clock generating input	52	P34/RxD3	I/O	Port3 / Receive data
21	P40/INT40/XCOUT	I/O	Port4 / Interrupt input / Sub-clock generating output	53	P33/SCL	I/O	Port3 / Serial clock
22	XIN	I	Clock input	54	P32/SDA	I/O	Port3 / Serial data
23	XOUT	O	Clock output	55	P31/DA2	I/O	Port3 / D-A converter output
24	VSS	-	Ground	56	P30/DA1	I/O	
25	P27(LED7)	I/O	Port2	57	VCC	-	Power supply +5V
26	P26(LED6)	I/O		58	VREF	I	Reference voltage
27	P25(LED5)	I/O		59	AVSS	I	Analog ground
28	P24(LED4)	I/O		60	P67/AN7	I/O	Port6 / A-D converter input
29	P23(LED3)	I/O		61	P66/AN6	I/O	
30	P22(LED2)	I/O		62	P65/AN5	I/O	
31	P21(LED1)	I/O		63	P64/AN4	I/O	
32	P20(LED0)	I/O		64	P63/AN3	I/O	

● MPD6S004S (X4404A01) DC-DC CONVERTER

AM: IC95

PIN NO.	NAME	I/O	FUNCTION	PIN NO.	NAME	I/O	FUNCTION
1	VIN	I	Input voltage	17	GND	-	Ground
2	VIN	I		18	GND	-	
3	VIN	I		19	GND	-	
4	GND	-	Ground	20	VOUT5	O	Output voltage +5V
5	GND	-		21	VOUT5	O	
6	GND	-		22	VOUT5	O	
7	GND	-		23	VOUT5	O	
8	VOUT33	O	Output voltage +3.3V	24	VOUT5	O	
9	VOUT33	O		25	GND	-	Ground
10	VOUT33	O		26	GND	-	
11	VOUT33	O		27	GND	-	
12	VOUT33	O		28	GND	-	
13	No. pin	-		29	VIN	I	Input voltage
14	GND	-	Ground	30	VIN	I	
15	GND	-		31	VIN	I	
16	GND	-					

CIRCUIT BOARDS

AM Circuit Board (YD223C0) 22/23
DJK Circuit Board (YD223C0) 40
DML Circuit Board (YD221C0) 24/25
EIF Circuit Board (YD222A0) 26/27
EMKS61A Circuit Board (X6637C0) 38/39
ENC Circuit Board (YD222A0) 32
HP Circuit Board (YD223C0) 26/27
JS Circuit Board (YD299A0) 33
MK-H Circuit Board (XR565C0) 39
MK-L Circuit Board (XR564C0) 38
OR Circuit Board (YD222A0) 30/31
PNCA Circuit Board (YD222A0) 28/30
PNCB Circuit Board (YD222A0) 32
PNL Circuit Board (X8086D0) 34
PNR Circuit Board (X8086D0) 36
SW Circuit Board (YD223C0) 28/29
VR Circuit Board (YD223C0) 28/29

Note: See parts list for details of circuit board component parts.

● AM Circuit Board

Scale: 85/100

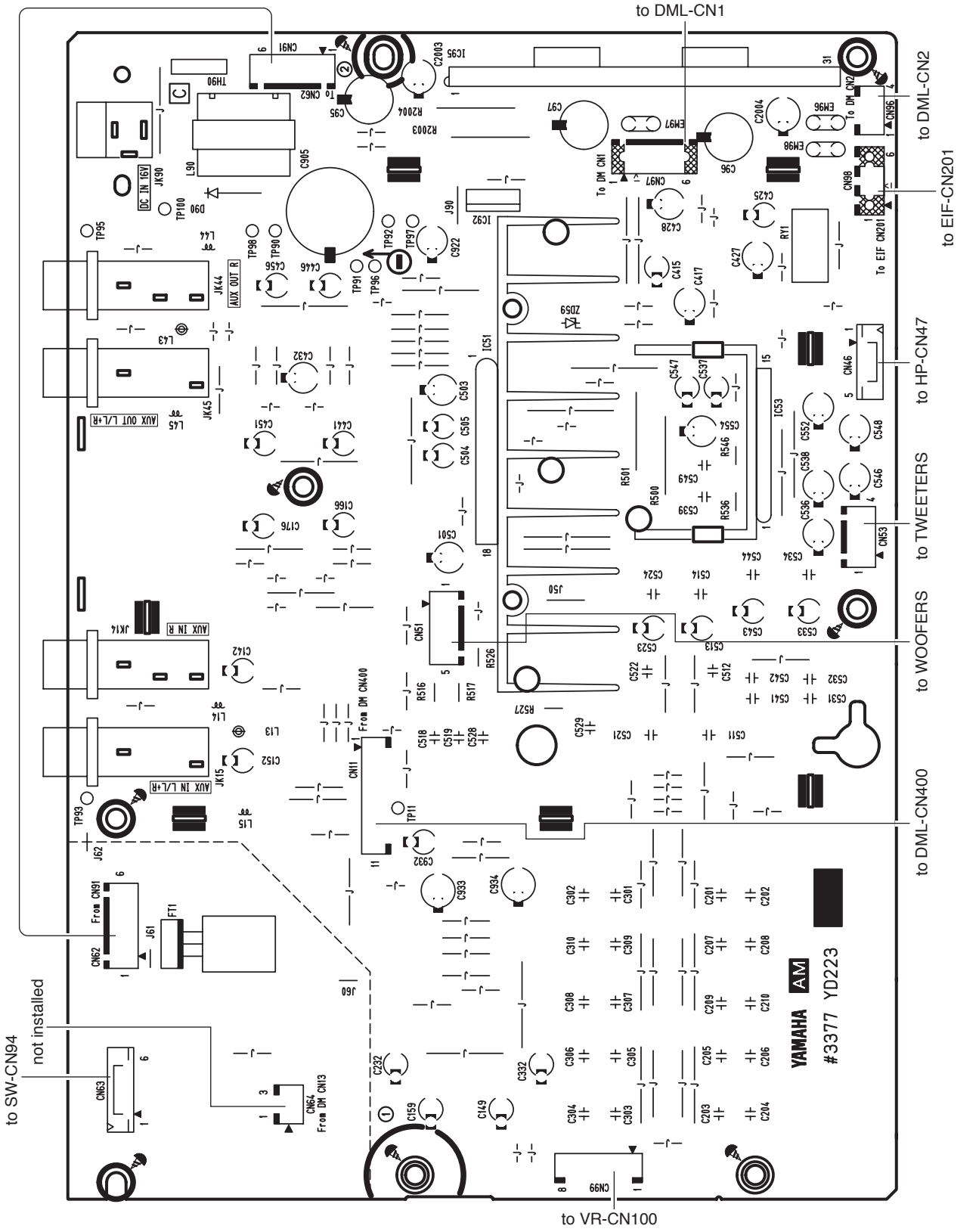

Component side

AM: 2NA-WW42150 ⚠1

● AM Circuit Board

Scale: 85/100

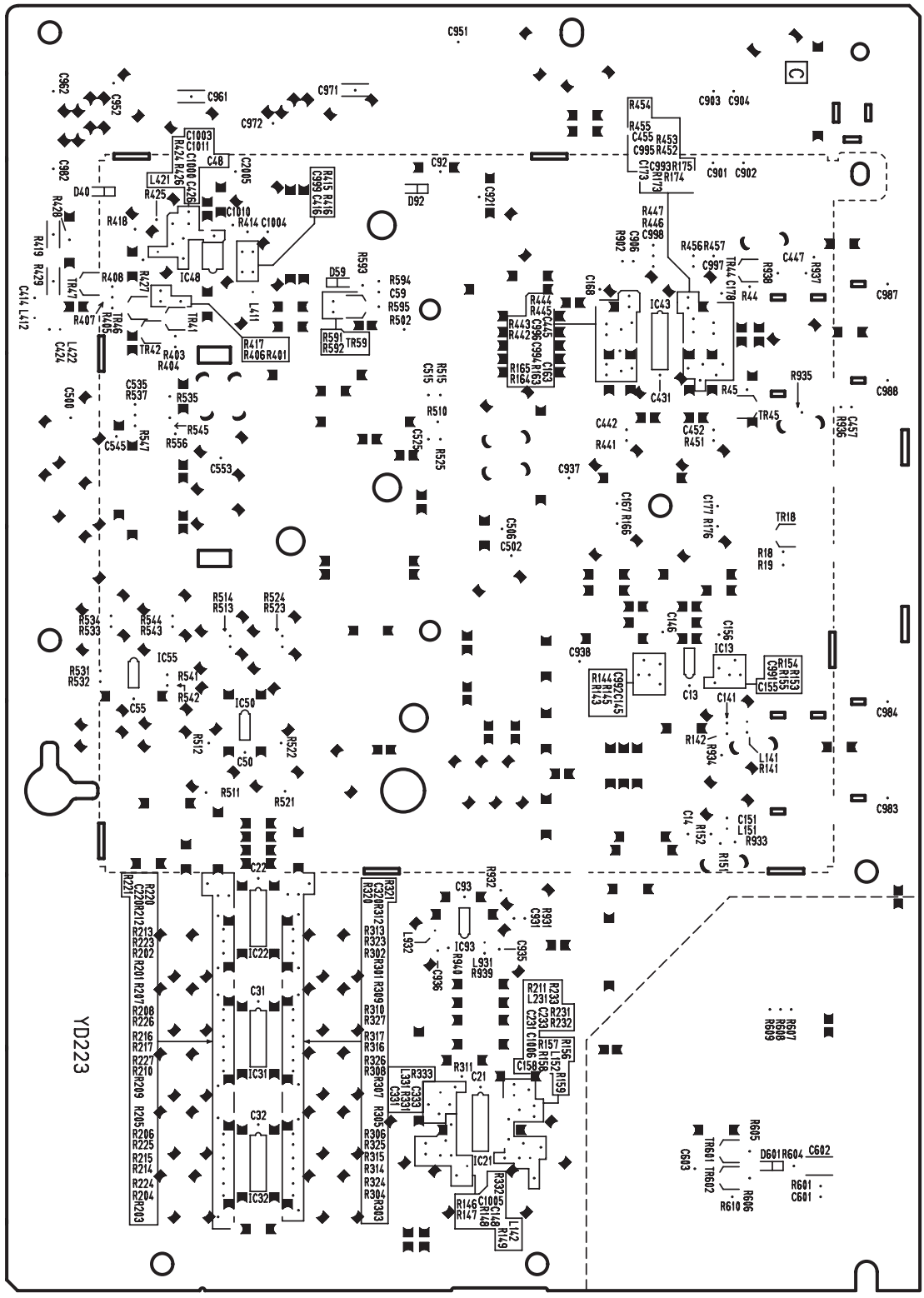

Pattern side

AM: 2NA-WW42150 ⚠1

● DML Circuit Board

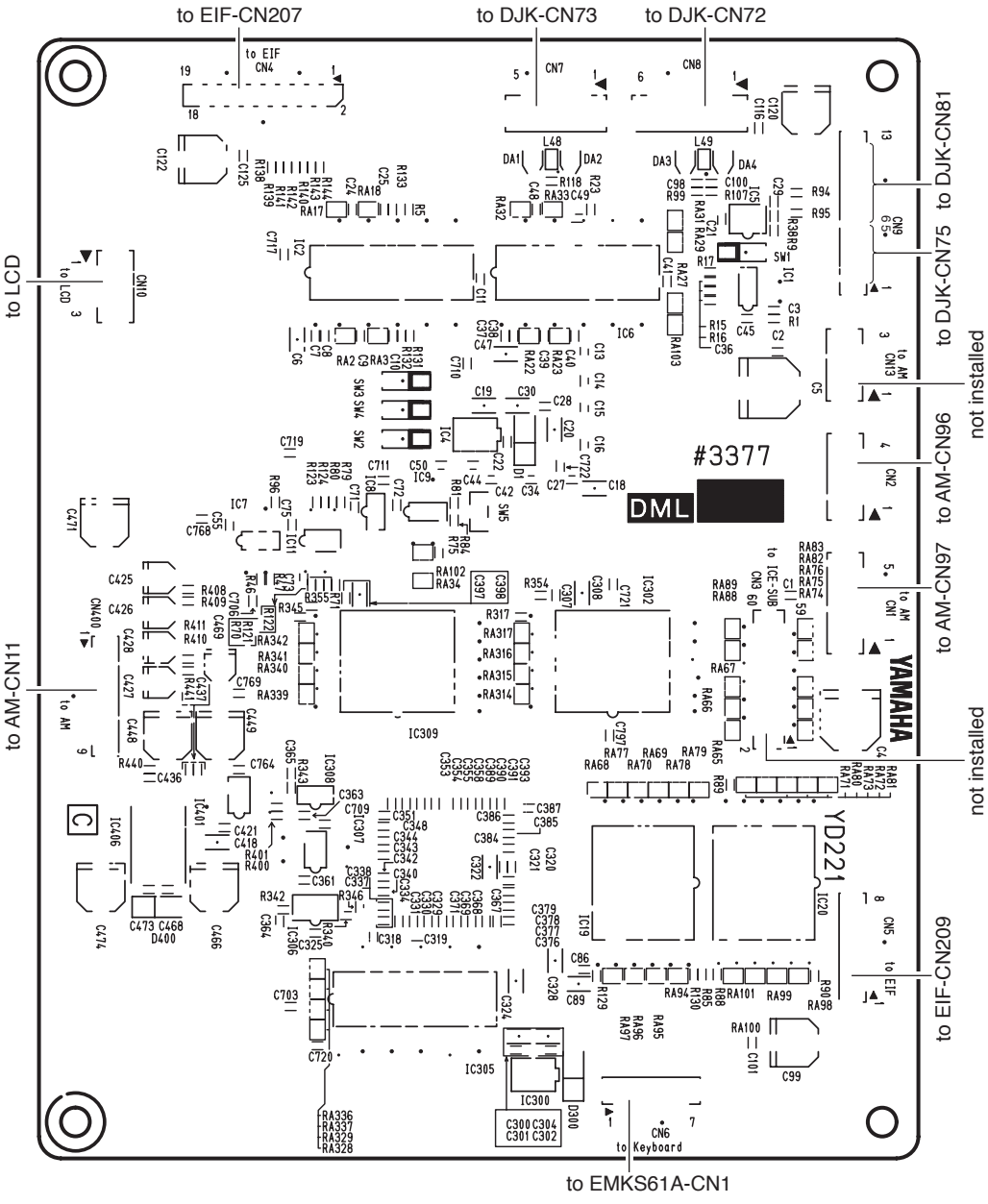

Component side

DML: 2NA-WW42140 ⚠1

● DML Circuit Board

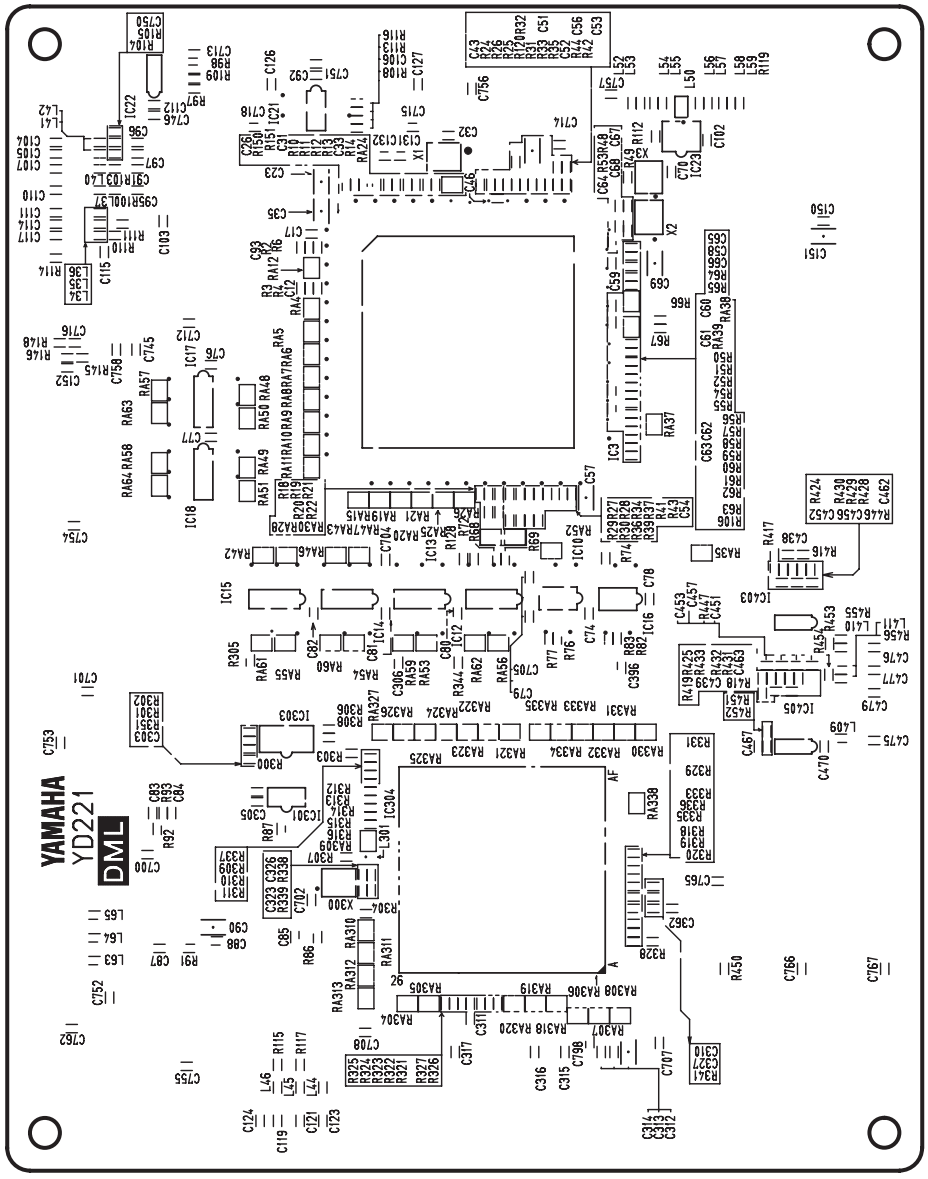

Pattern side

DML: 2NA-WW42140 ⚠1

● EIF Circuit Board

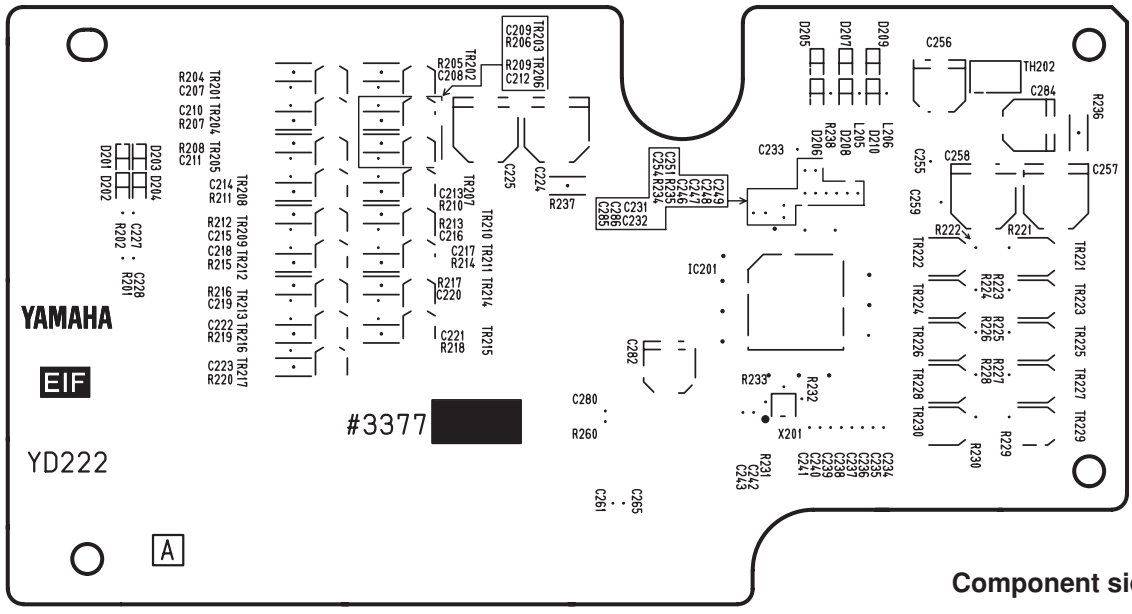

Component side

● HP Circuit Board

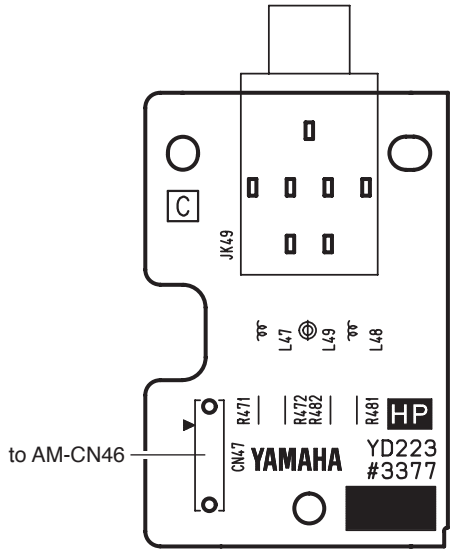

Component side

EIF: 2NA-WW42170
HP: 2NA-WW42150 ⚠1

● EIF Circuit Board

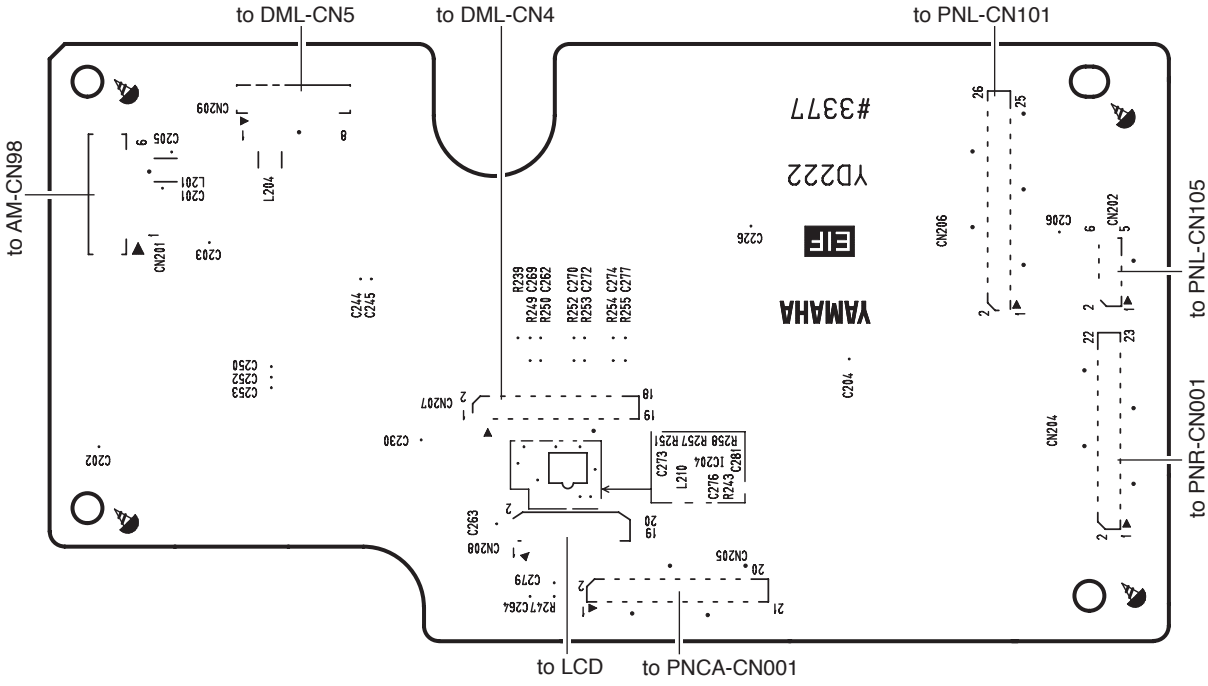

Pattern side

● HP Circuit Board

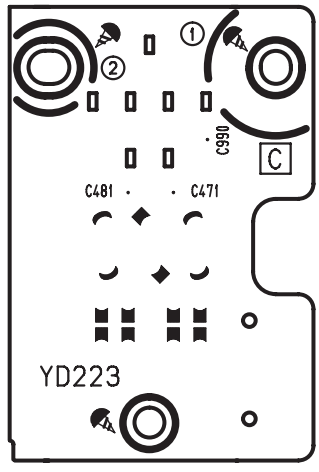

Pattern side

EIF: 2NA-WW42170
HP: 2NA-WW42150 ⚠1

● SW Circuit Board

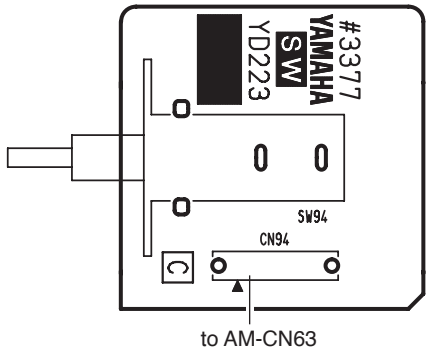

Component side

● PNCA Circuit Board

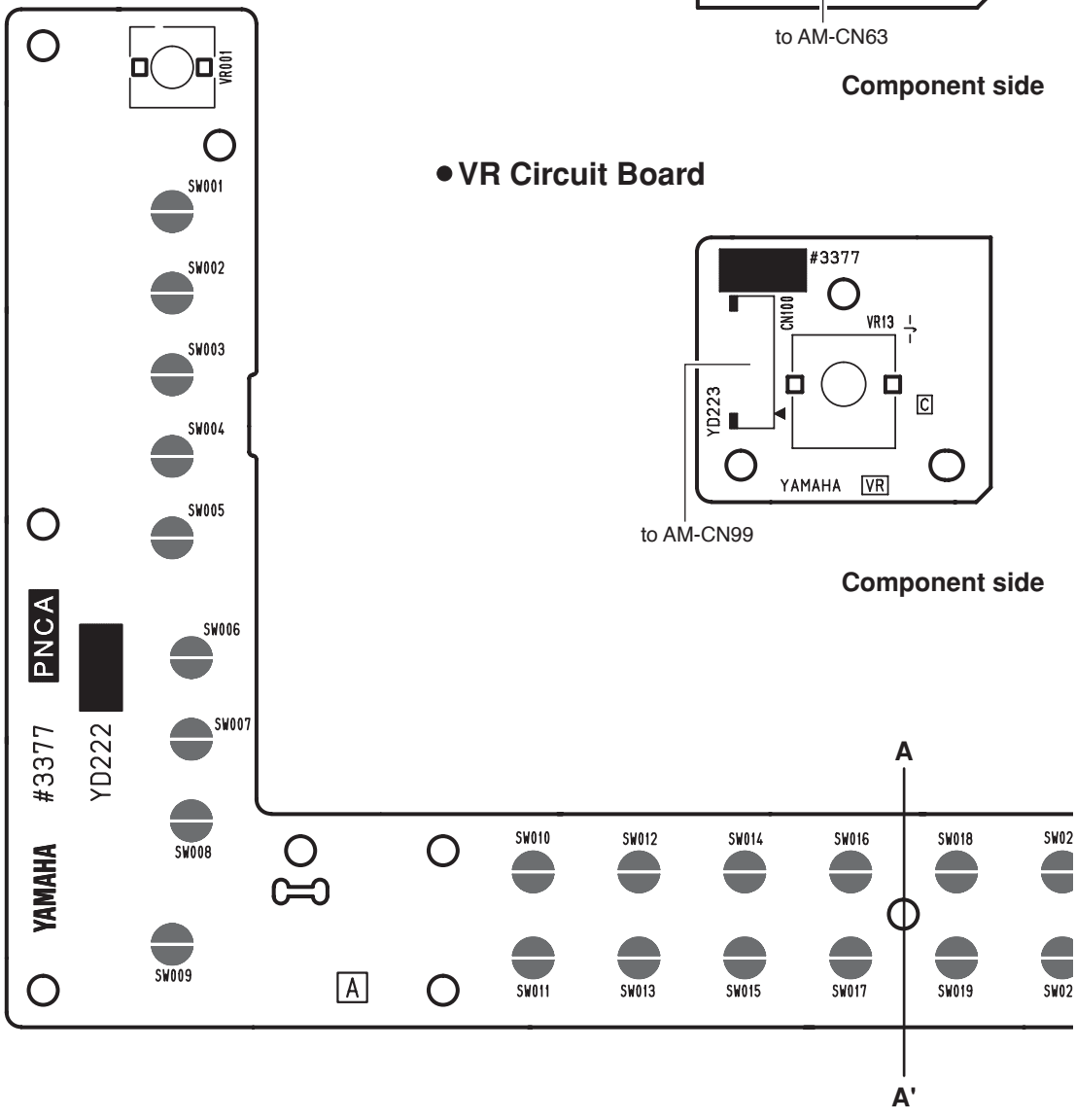

● VR Circuit Board

Component side

PNCA: 2NA-WW42170
SW, VR: 2NA-WW42150 ⚠1

● SW Circuit Board

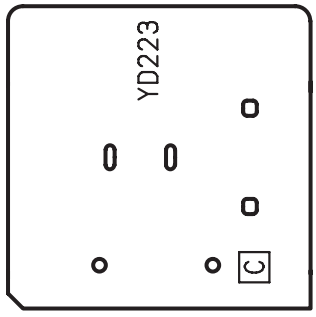

Pattern side

● VR Circuit Board

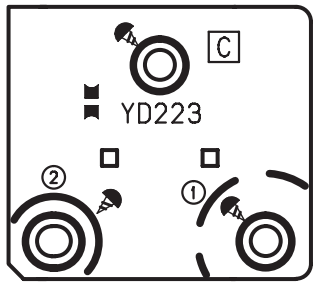

Pattern side

Component side

● OR Circuit Board

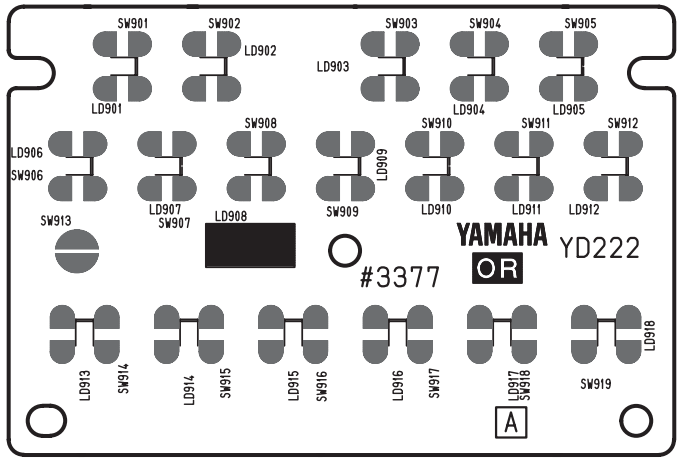

Component side

● PNCA Circuit Board

OR, PNCA: 2NA-WW42170

● OR Circuit Board

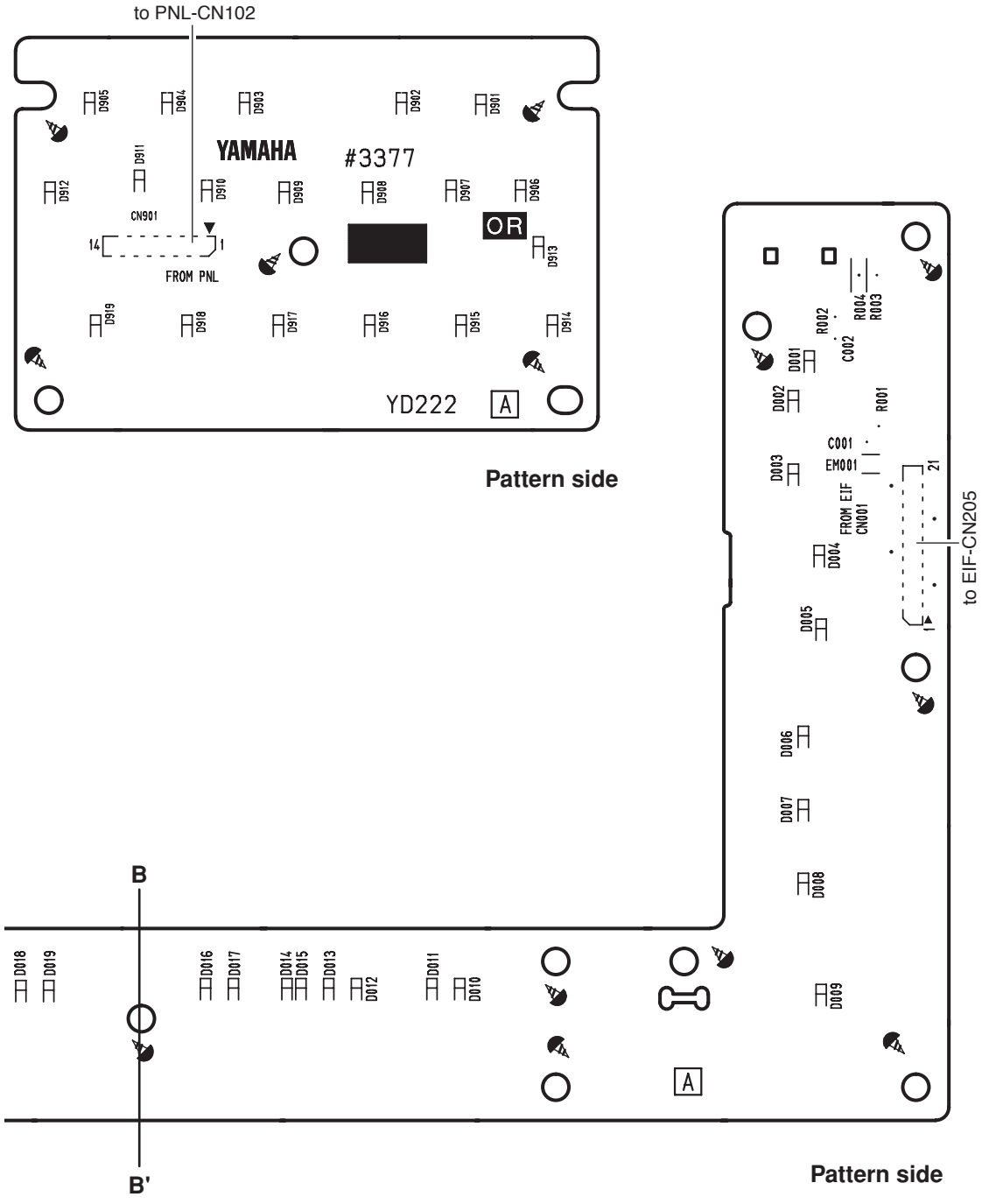

OR, PNCA: 2NA-WW42170

● PNCB Circuit Board

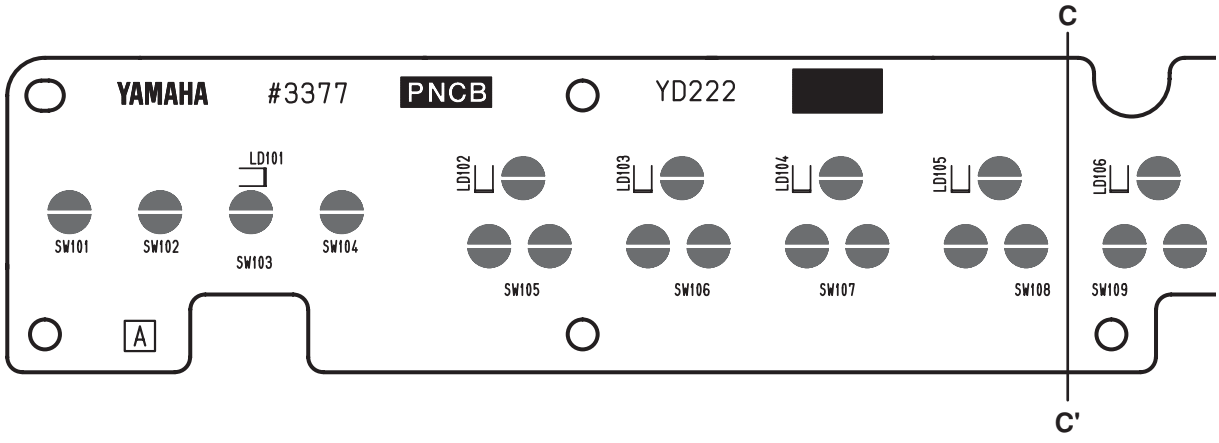

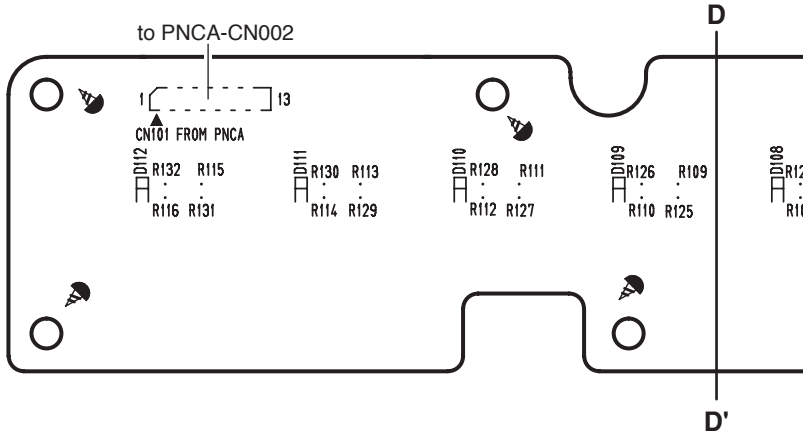

● ENC Circuit Board

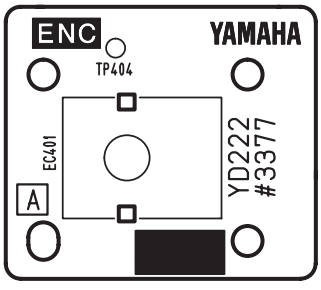

Component side

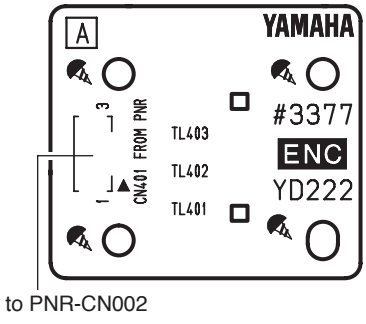

Pattern side

PNCB: 2NA-WW42170
ENC: 2NA-WW42170

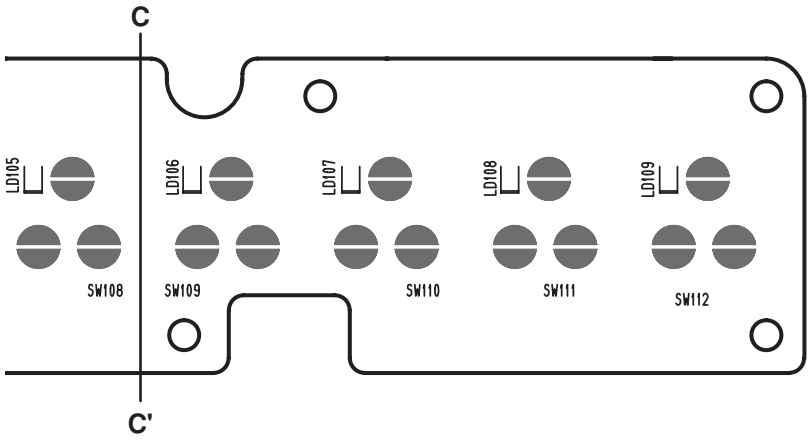

Component side

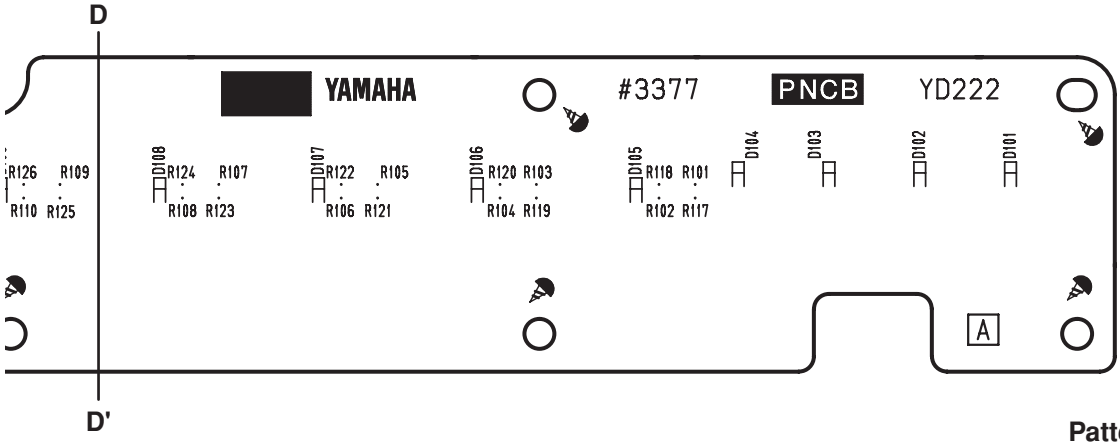

Pattern side

● JS Circuit Board

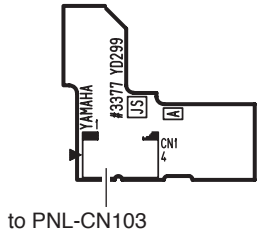

Component side

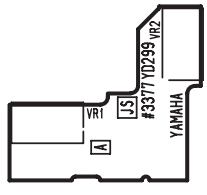

Pattern side

PNCB: 2NA-WW42170
JS: 2NA-WY02620 ⚠1

● PNL Circuit Board

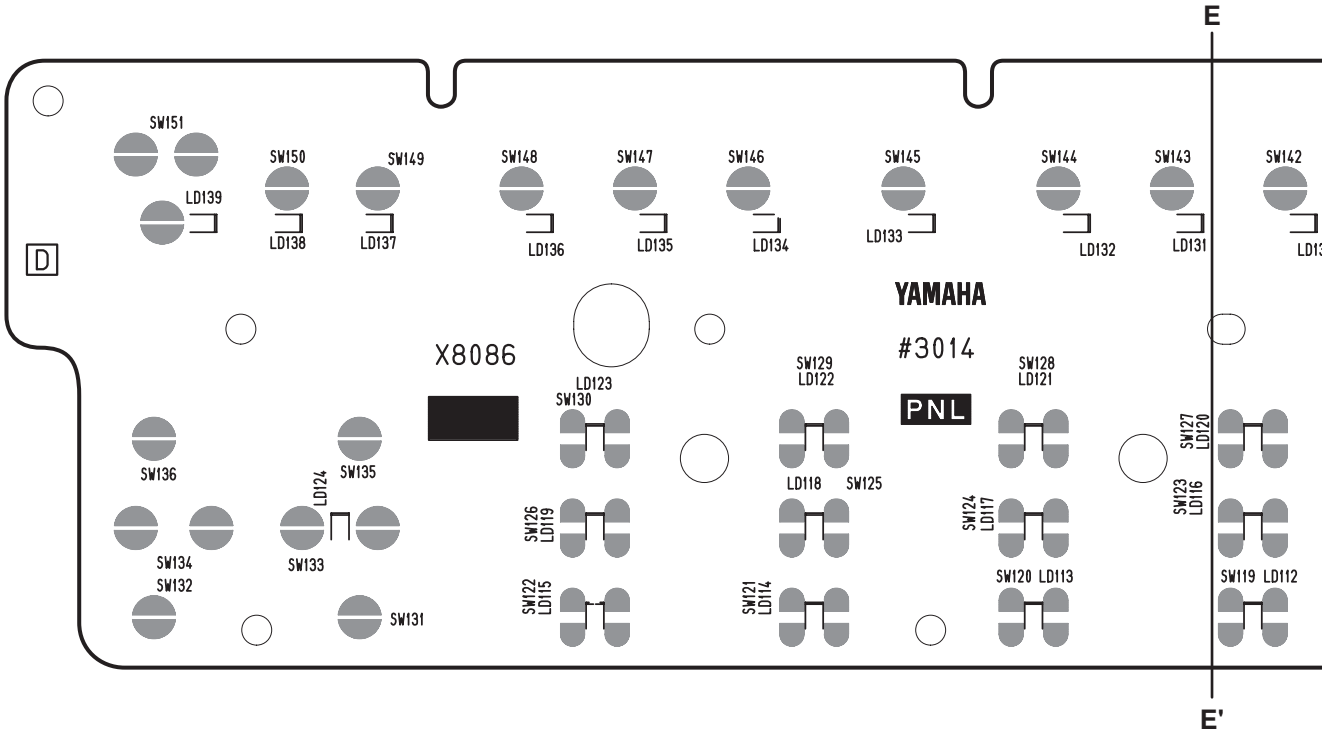

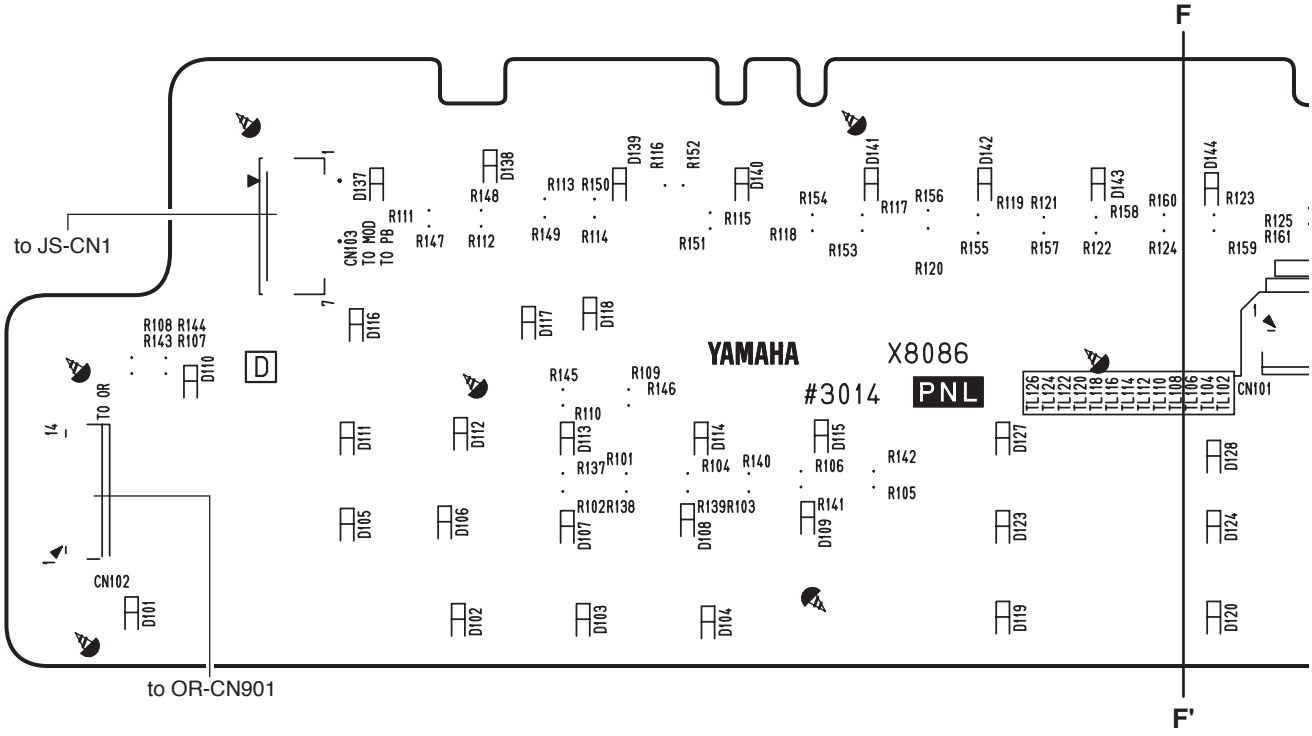

PNL: 2NA-WJ00760 ⚠

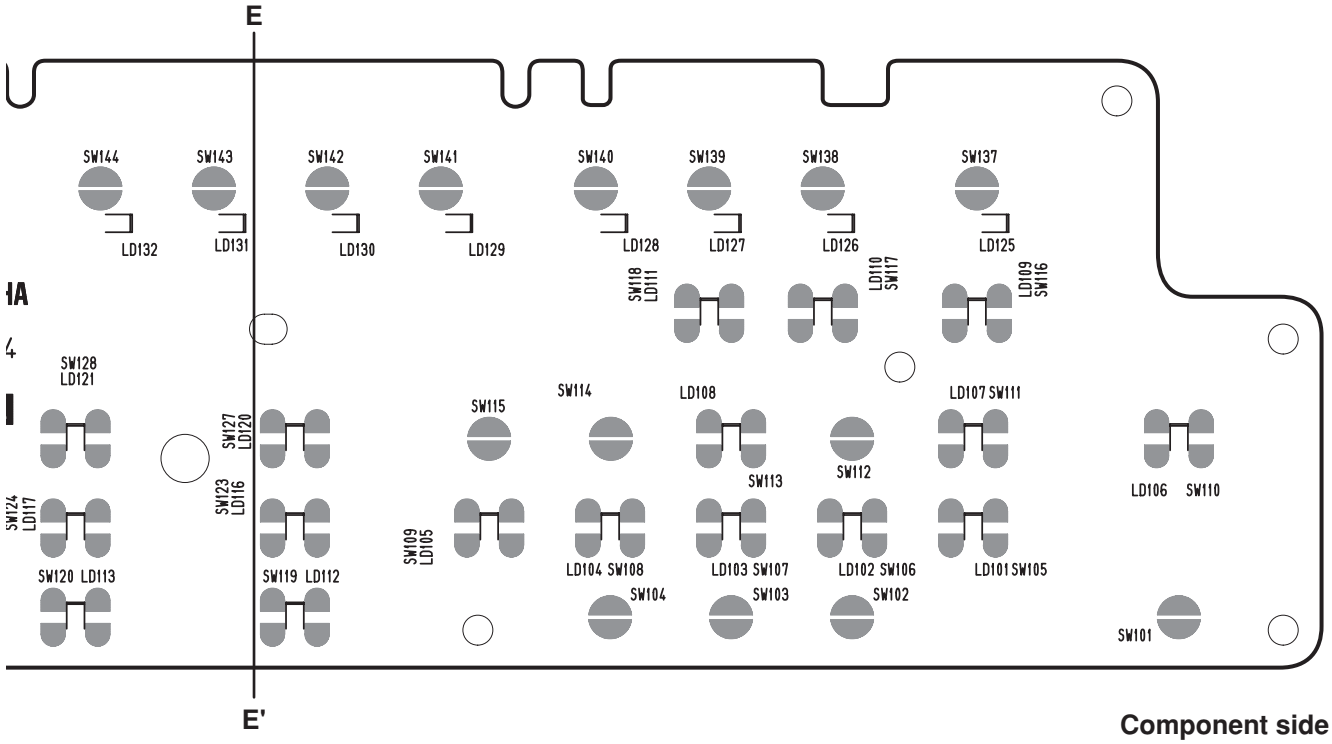

Component side

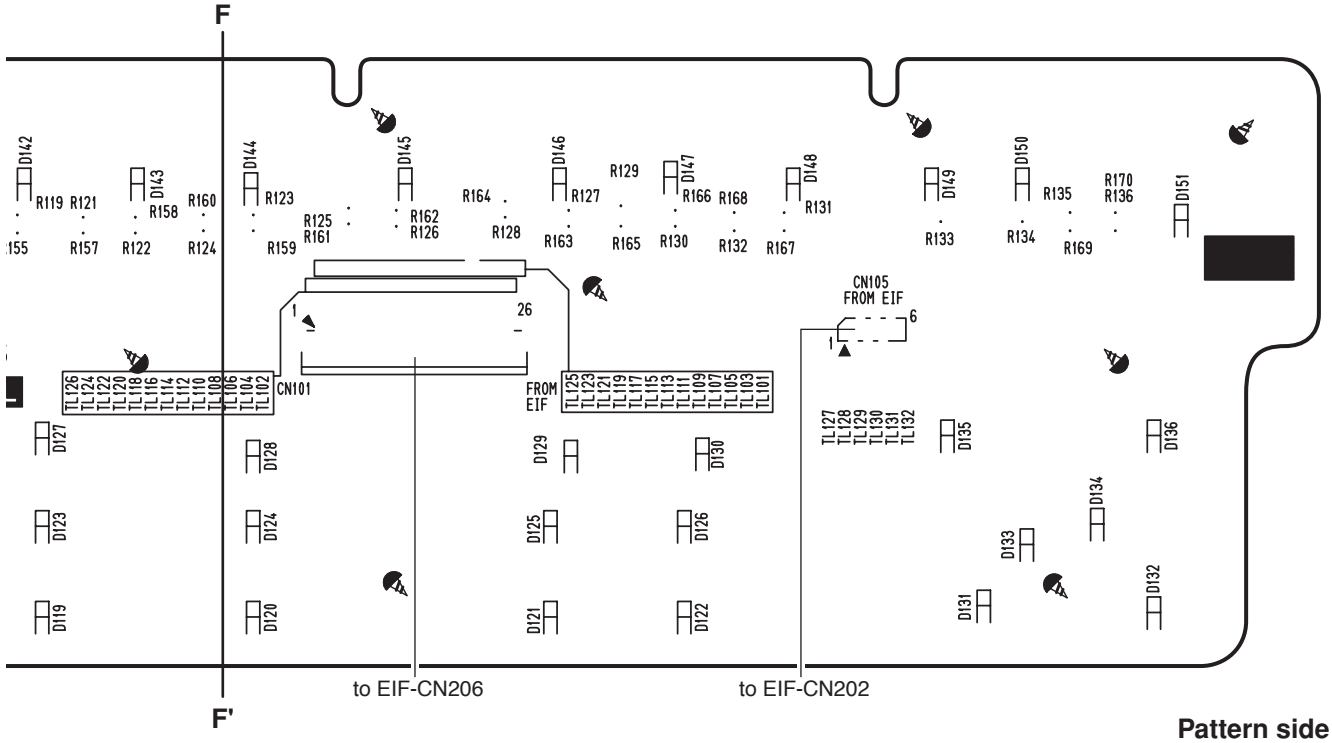

Pattern side

PNL: 2NA-WJ00760 ⚠1

● PNR Circuit Board

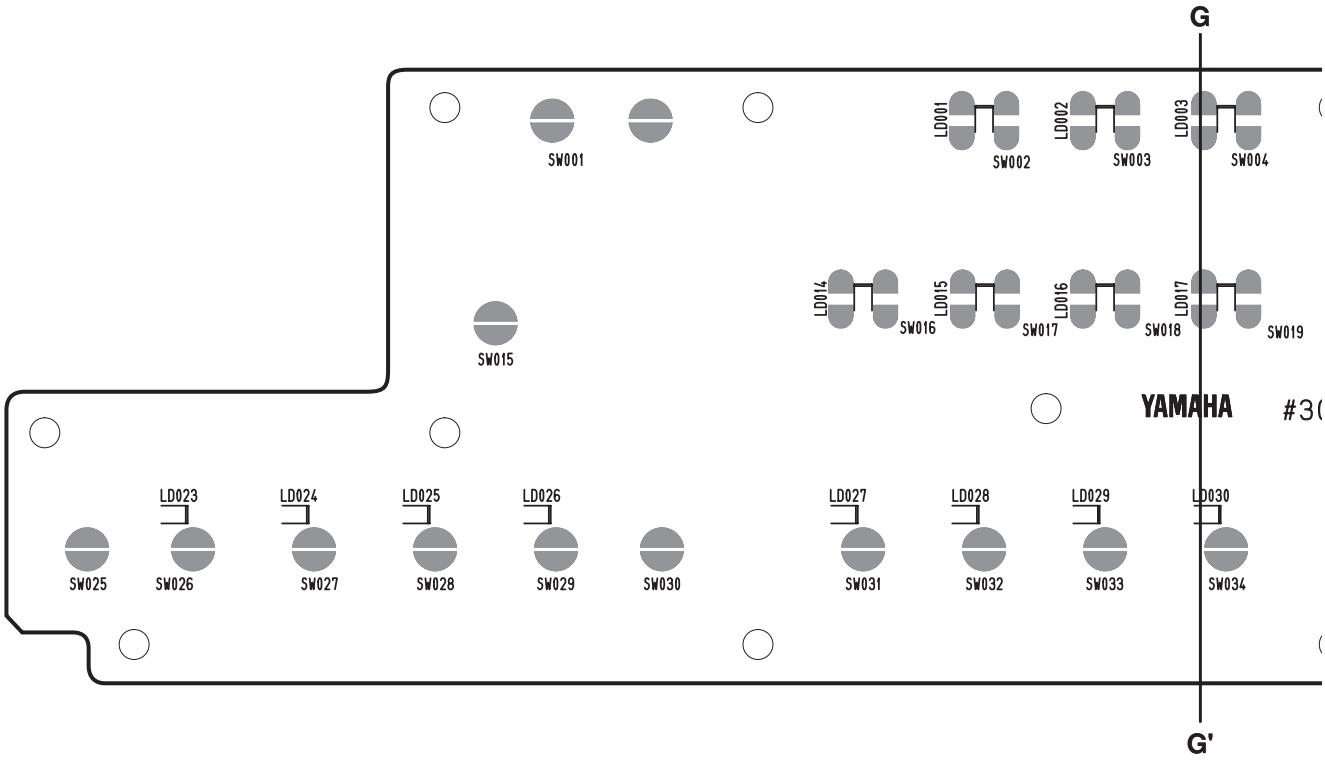

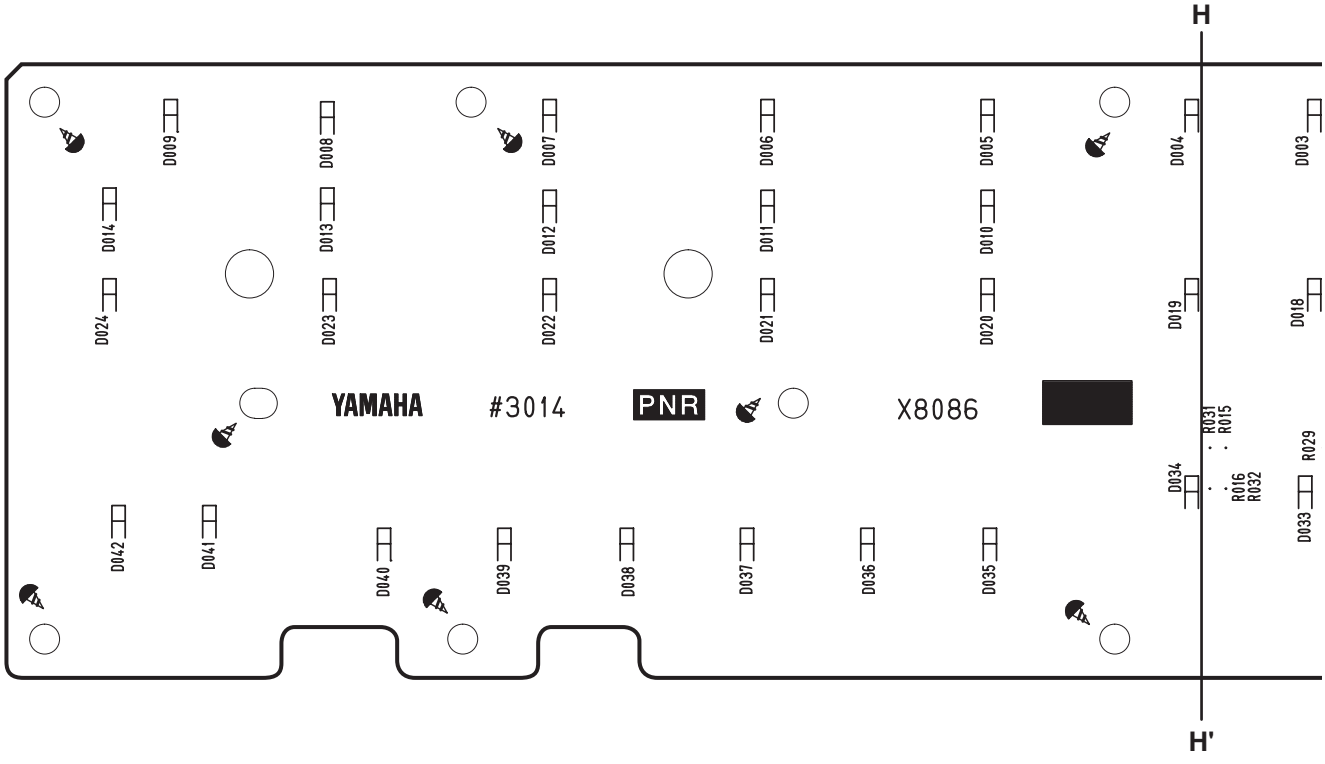

PNR: 2NA-WJ00760 ⚠1

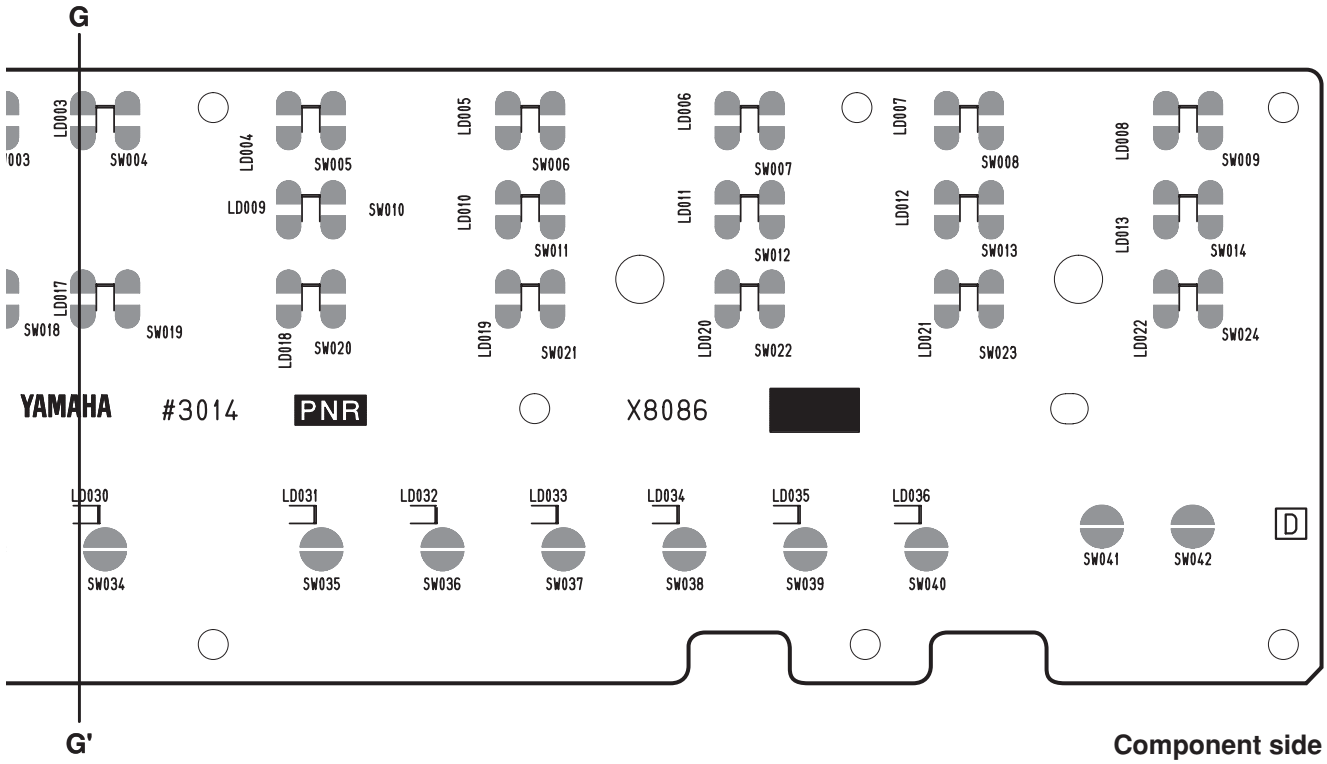

Component side

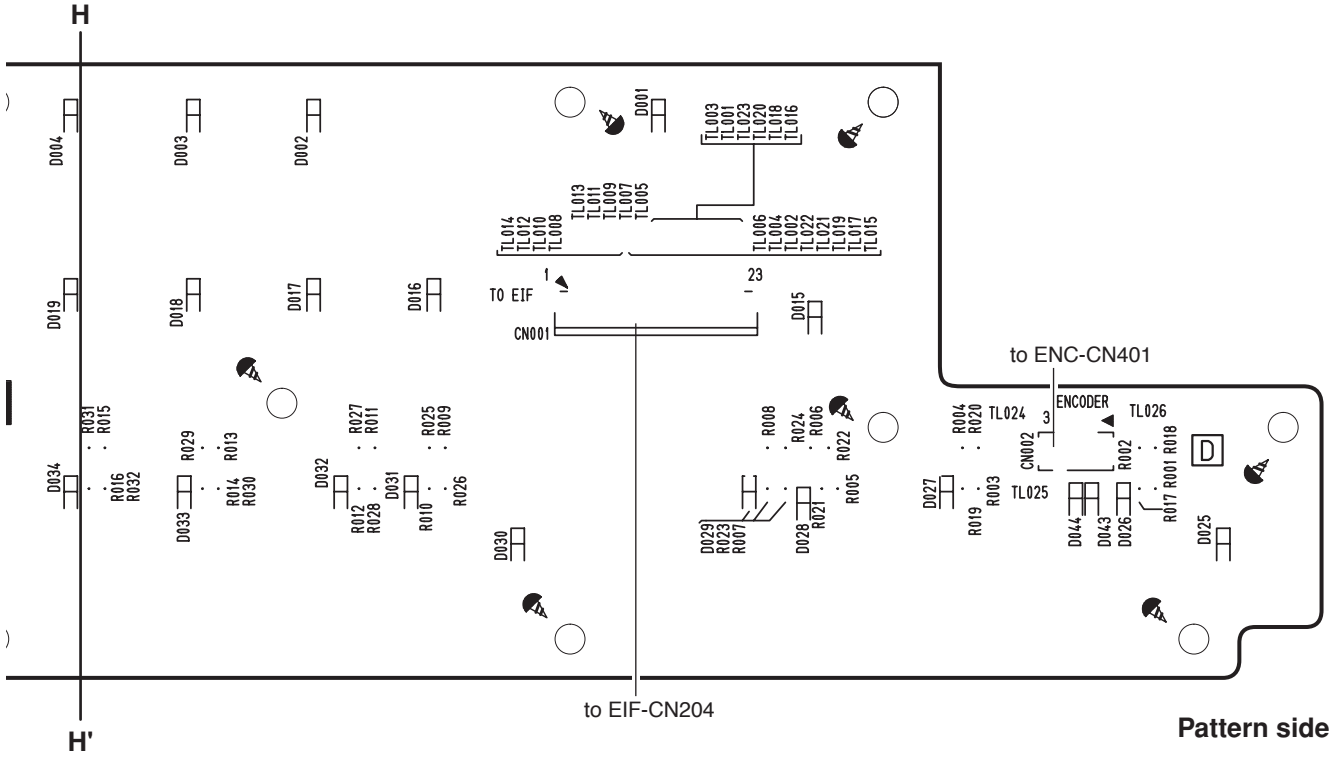

Pattern side

PNR: 2NA-WJ00760 ⚠1

● MK-L Circuit Board

Scale: 90/100

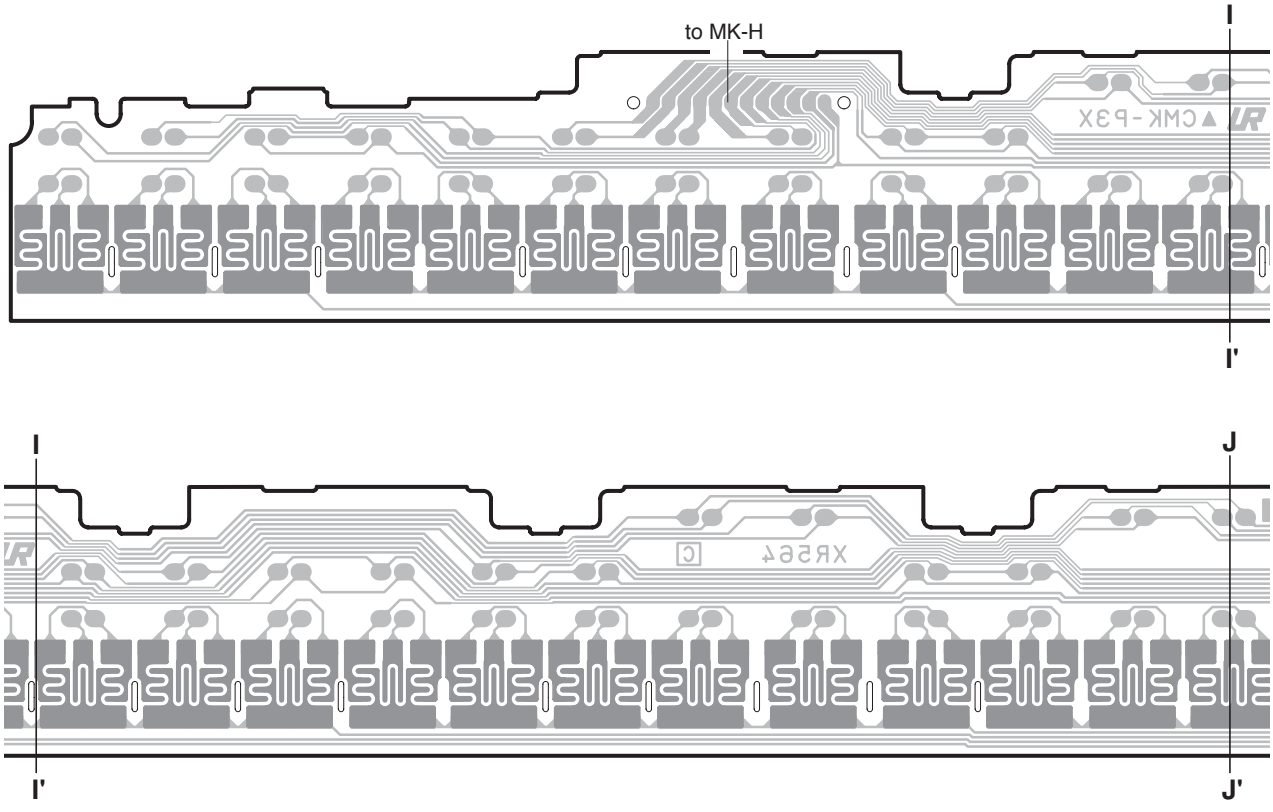

Component side

● EMKS61A Circuit Board

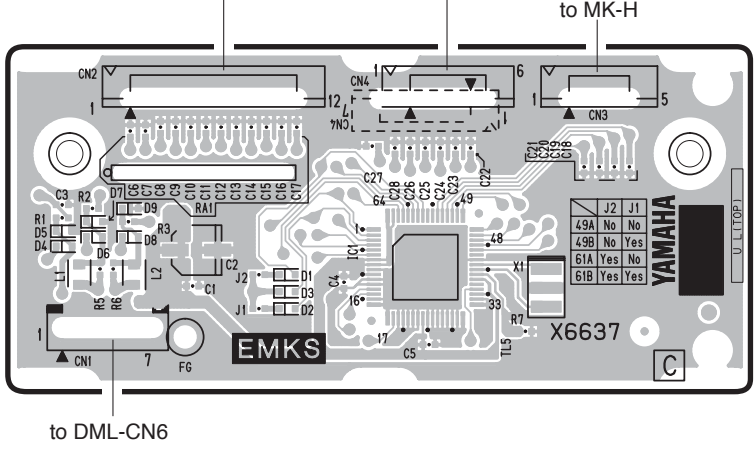

Component side

EMKS61A: 2NA-WF31010
MK-L: 2NA-VV58380

● MK-H Circuit Board

Scale: 90/100

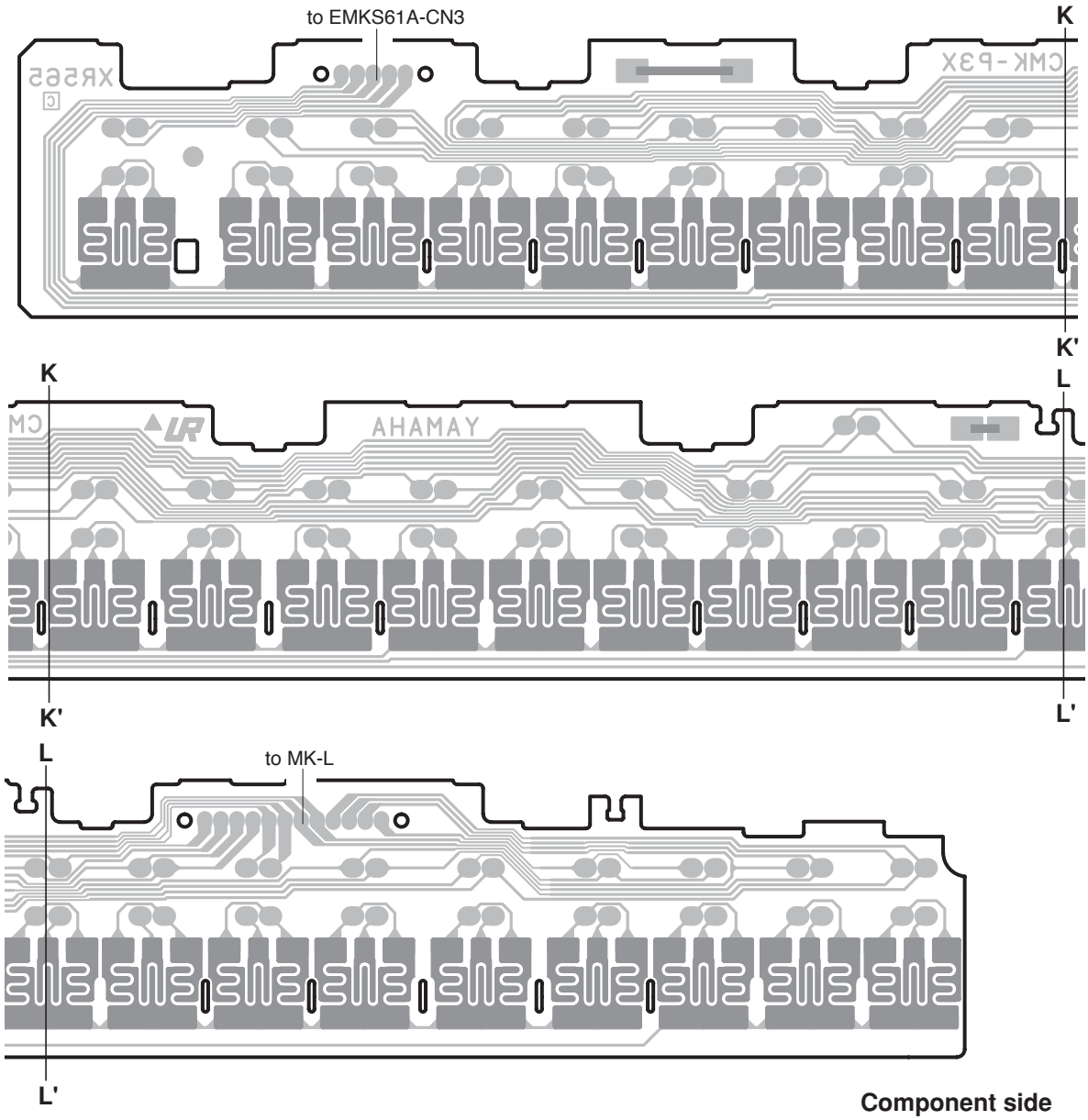

Component side

● EMKS61A Circuit Board

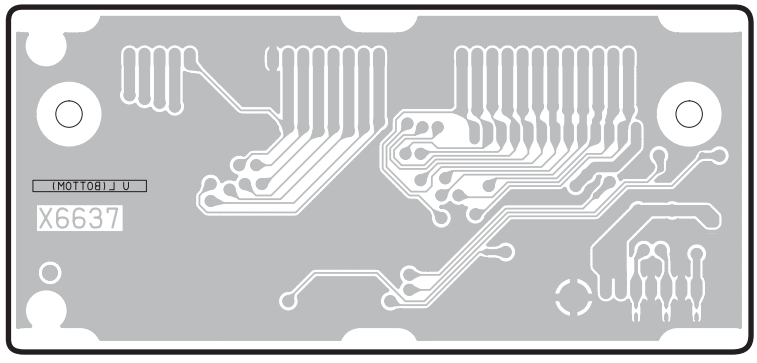

Pattern side

EMKS61A: 2NA-WF31010
MK-H: 2NA-VV58390

● DJK Circuit Board

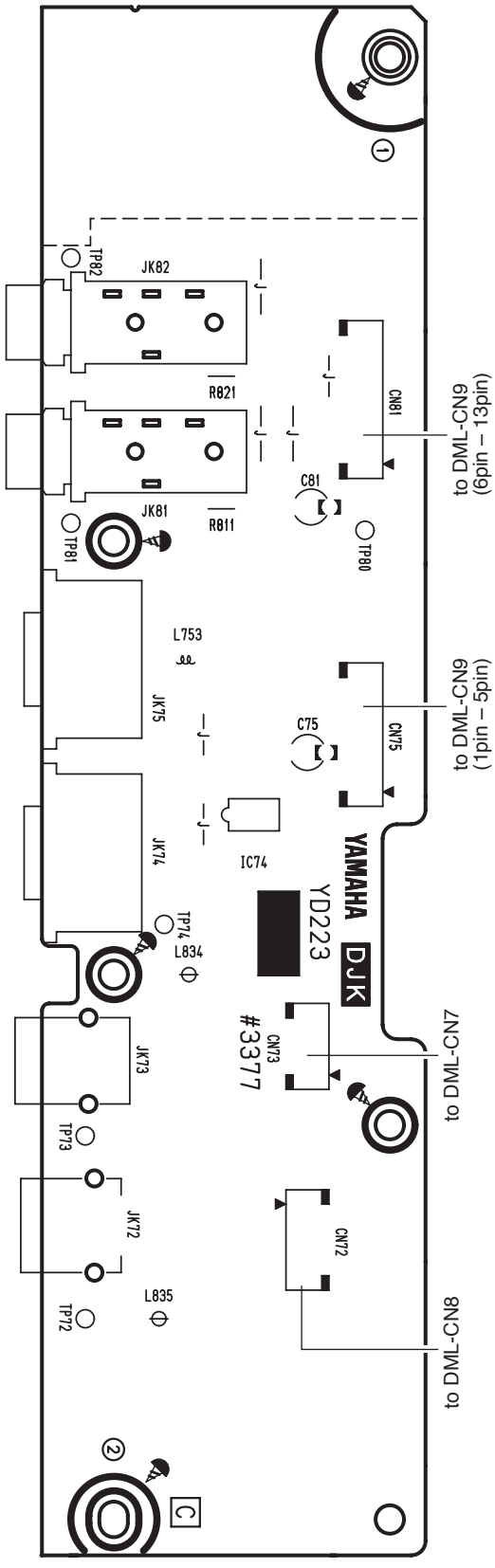

Component side

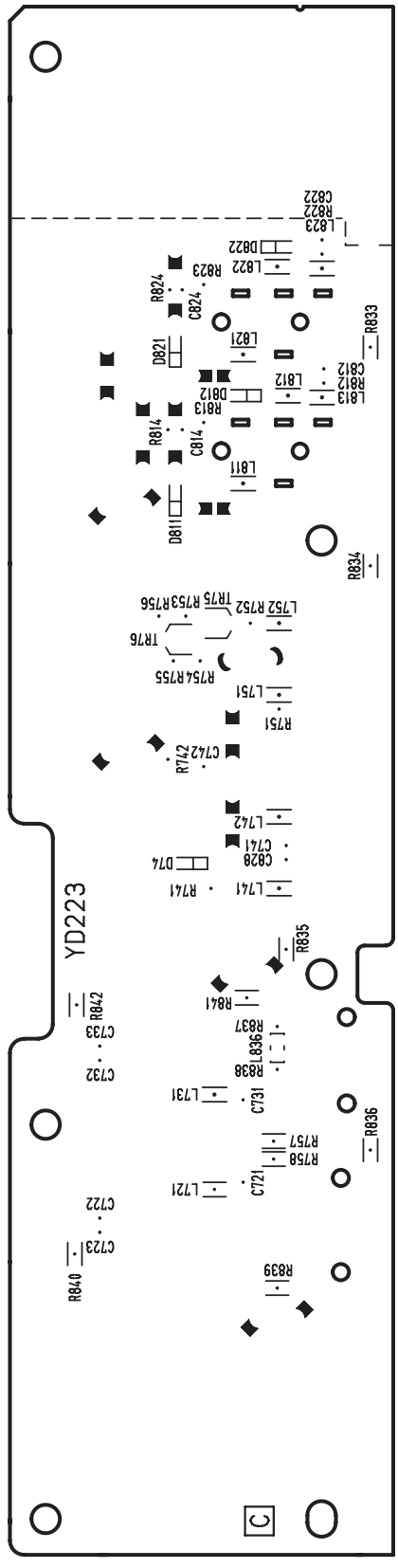

Pattern side

DJK: 2NA-WW42150 ⚠1

TEST PROGRAM

*** If the test number 39 "Factory Set" is executed, the data already set will be lost.**

1 Measurement Conditions

1-1: Power Source

Use an AC adaptor PA-300C.

1-2: Measuring Instruments

· Level meter (with a JIS-C filter).
· Frequency counter, which can detect thousandth value or more
· Oscilloscope
* Input impedance of the measuring instrument should be 1 MΩ or more.
* Connect a load resistor of 33 Ω and measure at the [PHONES] jack using stereo plugs unless otherwise specified.

1-3: Jig

Foot controller (FC7), MIDI cable, USB cable, USB storage device (USB flash memory, etc.)
* For an inspection that requires a pedal unit, inspect with the pedal unit connected.

2 Starting up the test program

Turn on the power switch while pressing and holding the [C#2], [F2], and [G#2] on the lower keyboard (C#2 major code).

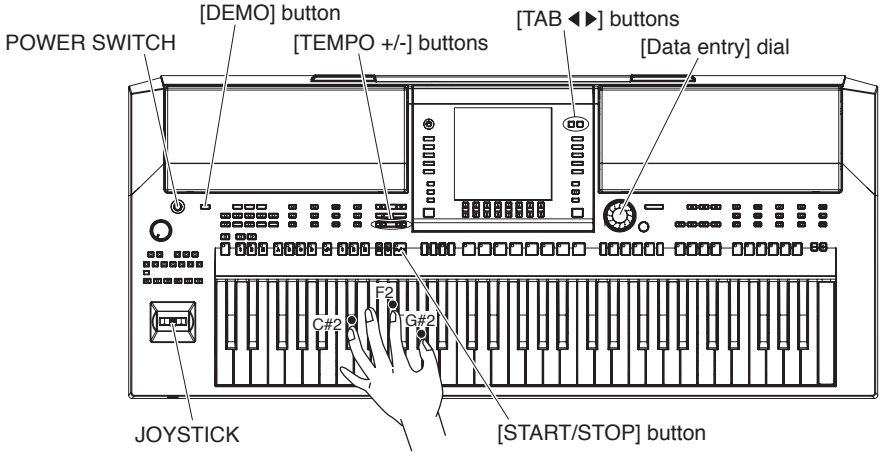

2-1: How to carry out tests

1) "**TEST**" will appear on the LCD when the test program starts up.
※ If "**[Joystick] : No Calibration**" will appear on the LCD, follow the instructions in section "JOYSTICK CALIBRATION MODE". (See page 49.)
2) Go to item choosing mode with [TEMPO +]/[TEMPO -] button or [Data entry] dial.
(If the [Data entry] dial is turned counterclockwise at the head of items (Test 1), the last item (Test 41) will be selected. If the [Data entry] dial is turned clockwise at the last item (Test 41), the head of items (Test 1) will be selected.
3) Press the [START/STOP] button to execute a test.

● **If the test result is OK:**
When the test result is OK, an asterisk " ✻ " will be displayed at the head so that you can see later if it has already been checked. If the result is OK, return to the selection screen with the [START/STOP] button.

● **If the test result is NG:**
If the result is NG, press the [DEMO] button or lowest key on the keyboard to return to the selection display.

3 Tests Overview

Test No.	LCD display	Test descriptions, judging conditions, etc.
1	**001 : Version**	Checking the version of the ROM. Displays version of the ROM. If the [TAB▶] button is pressed while the version is displayed, a sub version display will be shown. In case of NG, "0.00" appears in the version field. **Model Name : PSR-A2000 (E) **** **Program ROM : ＊.＊＊** **Backup ROM : ＊.＊＊** **Wave ROM : ＊.＊＊** **(Sub Version)** **Main Boot : ＊.＊＊** **Main Program : ＊.＊＊** **BitMap1 : ＊.＊＊** **Contents1 : ＊.＊＊** **Contents2 : ＊.＊＊** **Wave1 : ＊.＊＊** ******: For products that support ErP, "-r" is shown; for products that do not support ErP, nothing is shown. **＊.＊＊ : Version**
2	**002 : Memory Check1 All** OK: **002 : Memory Check1 All** **OK** NG (Example): **002 : Memory Check1 All** **MAIN PROG ROM (IC19) NG**	Checking the ROM, RAM, BACKUP ROM, WAVE ROM and Effect RAM connected to the CPU bus. (Simplified check) The five (5) items Test No. 3 "**ROM Check1**", Test No. 4 "**RAM Check1**", Test No. 5 "**BACKUP ROM Check1**", Test No. 6 "**Wave ROM Check1**" and Test No. 7 "**Effect RAM Check1**" are performed in succession. Check that "**Memory Check1 All OK**" is displayed on the LCD. It will take about 8 seconds before the test is over. When NG is detected, the test ends at that point.
3	**003 : ROM Check1** OK: **003 : ROM Check1** **OK** NG: **003 : ROM Check1** **MAIN PROG ROM (IC19) NG** **MAIN PROG WR (IC19) NG**	Checking the ROM connected to the CPU bus. (Simplified check) Check that **"ROM Check1 OK"** is displayed on the LCD.
4	**004 : RAM Check1** OK: **004 : RAM Check1** **OK** NG: **004 : RAM Check1** **MAIN SDRAM (IC2, 6) NG**	Checking the RAM connected to the CPU bus. (Simplified check) Check that **"RAM Check1 OK"** is displayed on the LCD.
5	**005 : BACKUP ROM Check1** OK: **005 : BACKUP ROM Check1** **OK** NG: **005 : BACKUP ROM Check1** **BACKUP (IC20) NG**	Checking the BACKUP ROM connected to the CPU bus. (Simplified check) Check that **"BACKUP ROM Check1 OK"** is displayed on the LCD. It will take about 6 seconds before the test is over.
6	**006 : Wave ROM Check1** OK: **006 : Wave ROM Check1** **OK** NG: **006 : Wave ROM Check1** **Wave ROM (IC302, 309) NG** **Wave WR (IC302, 309) NG**	Checking the WAVE ROM connected to the TG bus. (Simplified check) Check that **"Wave ROM Check1 OK"** is displayed on the LCD.

Test No.	LCD display	Test descriptions, judging conditions, etc.
7	**007 : Effect RAM Check1** OK: **007 : Effect RAM Check1 OK** NG: **007 : Effect RAM Check1 TG1 (IC305) NG**	Checking the Effect RAM connected to the TG bus. (Simplified check) Check that **"Effect RAM Check1 OK"** is displayed on LCD.
8	**008 : TG 1 Check** OK: **008 : TG 1 Check End**	Checking the tone generator 1. Sequentially outputs the sine wave starting from the low keys and switching sounds of the tone generator. (32 notes from C2 to G4) Check that there is no abnormal sounds or noise. **"TG 1 Check End"** will appear when the test is over.
9	**009 : Pitch Check**	Checking sound pitch. **Pitch accuracy check:** Connect a frequency counter to the [PHONES] jack. (Either L or R) When the test is started, a sine wave of A3 (441.0 ± 0.2 Hz) will be played. (PAN=Center) **Amount of volume decay:** Connect a level meter (with a JIS-C filter) to the L/R of the [PHONES] jack. Set the [MASTER VOLUME] control to the minimum. Load should be 33 Ω. Check that the amount of decay is 75.0 dB or more for both L and R of the [PHONES] jack.
10	**010 : Output R Check**	Checking the R channel output. Connect a level meter (with a JIS-C filter) to each jack. (PHONES L, R, OUTPUT L/L+R, R) Set the [MASTER VOLUME] control to the maximum level and check the output level of the R channel. (C5 (1049 Hz), PAN=R) (PHONES L, R: 33 Ω load, OUTPUT L/L+R, R: 10 kΩ load (2 monaural jacks used simultaneously)) · PHONES L: -45.0 dBu or less PHONES R: -2.6 ± 2 dBu · OUTPUT L/L+R: -40.0 dBu or less OUTPUT R: +9.1 ± 2 dBu
11	**011 : Output L Check**	Checking the L channel output. Connect a level meter (with a JIS-C filter) to each jack. (PHONES L, R, OUTPUT L/L+R, R) Set the [MASTER VOLUME] control to the maximum level and check the output level of the L channel. (C5 (1049 Hz), PAN = L) (PHONES L, R: 33 Ω load, OUTPUT L/L+R, R: 10 kΩ load (2 monaural jacks used simultaneously)) · PHONES L: -2.6 ± 2 dBu PHONES R: -45.0 dBu or less · OUTPUT L/L+R: +9.1 ± 2 dBu OUTPUT R: -40.0 dBu or less
	Noise Level	After the test 11 is completed, connect the level meter (with a JIS-C filter) to the L/R of the [PHONES] jack and check the noise level. (PHONES L, R: 33 Ω load) · PHONES L: -80.0 dBu or less PHONES R: -80.0 dBu or less
15	**015 : MUTE Check** MUTE OFF: **015 : MUTE Check OFF** MUTE ON: **015 : MUTE Check ON**	Checking MUTE. Set the [MASTER VOLUME] control to the maximum level. Connect a level meter (with a JIS-C filter) to the L/R of the [PHONES] jack. (33 Ω load) When the test is started with the [START/STOP] button, sounds can be played (MUTE OFF) and **"MUTE Check OFF"** is displayed on the LCD. Mute sounds (MUTE ON) with the [TAB◀] button and **"MUTE Check ON"** is displayed on the LCD. Cancel the mute function (MUTE OFF) with the [TAB▶] button and **"MUTE Check OFF"** is displayed on the LCD. Check output level when [MUTE ON] is selected. PHONES L, R: -80.0 dBu or less
16	**016 : SIOF Check**	Checking the MEL connection between the SWP51L and CPU. Check that sine wave at 441 Hz (A3) is played.

Test No.	LCD display	Test descriptions, judging conditions, etc.
17	**017 : SW, LED Check** OK: **017 : SW, LED Check** **END**	Checking switches and switch LEDs. Activate switches shown on the LCD one by one and a sound is played at the prescribed pitch respectively (refer to page 48). When a switch with LED is turned on, the LED will light up, too. (A two-colored LED will light in orange.) Sound continues to play as long as the switch is pressed. The LED continues to light until the next switch is pressed. To quit the test halfway, use the [DEMO] button or the lowest key on the keyboard to return to the selection screen. After all the switches are pressed, **"Dial Down"** will be shown on the LCD for [Data entry] dial check. Turn the [Data entry] dial counterclockwise and the number on the LCD will change from 50 to 0 and **"Dial Up"** will be shown on the LCD. Next, turn the dial clockwise and the number will change from 0 to 100. Make sure that **"SW, LCD Check END"** is displayed on the LCD.
18	**018 : All LED On Check**	Checking whole LEDs' lighting up. Check that all the LEDs will light. All the LEDs on the PNL side will light with the [TAB◀] button. All the LEDs on the PNR side will light with the [TAB▶] button. Two-colored LEDs will light in orange.
19	**019 : Red LED On Check**	Checking whole red LEDs' lighting up. Check that all the red LEDs will light. All the red LEDs on the PNL side will light with the [TAB◀] button. All the red LEDs on the PNR side will light with the [TAB▶] button.
20	**020 : Green LED On Check**	Checking whole green LEDs' lighting up. Check that all the green LEDs will light. All the green LEDs on the PNL side will light with the [TAB◀] button. All the green LEDs on the PNR side will light with the [TAB▶] button.
21	**021 : All LCD On Check**	Checking whole LCD's lighting up. Check that all the dots in the LCD are turned black.
22	**022 : All LCD Off Check**	Checking whole LCD's turning off. Check that all the dots in the LCD are turned white.
23	**023 : Joystick Check** OK: **023 : Joystick Check** **OK**	Move the joystick vertically and horizontally according to the instructions on the screen, and check that the maximums, minimums, and center are detected. While operating, current values are displayed in a range from 0 to 127. (V: vertical direction, H: horizontal direction) Move the joystick to the left (sine wave C3 should sound) → right (sine wave D3 should sound) → center (sine wave E3 should sound) → upper (sine wave F3 should sound) → lower (sine wave G3 should sound) → center (sine wave C4 should sound). Make sure this works. Check that "**Joystick Check OK**" is displayed on the LCD when the test is completed. ※ If "**<<No Calibration>>**" will appear on the LCD, follow the instructions in section "JOYSTICK CALIBRATION MODE". (See page 49.)
24	**024 : Pedal 1 Check** OK: **024 : Pedal 1 Check** **OK** NG: **024 : Pedal 1 Check** **NG**	Checking the Pedal 1. Connect the foot controller (FC7) to the [FOOT PEDAL 1] jack. When the pedal is set to the minimum and C3 is played. When the pedal is set to the maximum and G3 is played. Disconnect the foot controller from the [FOOT PEDAL 1] jack and C4 is played. Check that **"Pedal 1 Check OK"** is displayed on the LCD when the test is completed.
25	**025 : Pedal 2 Check** OK: **025 : Pedal 2 Check** **OK** NG: **025 : Pedal 2 Check** **NG**	Checking the Pedal 2. Connect the foot controller (FC7) to the [FOOT PEDAL 2] jack. When the pedal is set to the minimum and C3 is played. When the pedal is set to the maximum and G3 is played. Disconnect the foot controller from the [FOOT PEDAL 2] jack and C4 is played. Check that **"Pedal 2 Check OK"** is displayed on the LCD when the test is completed.

Test No.	LCD display	Test descriptions, judging conditions, etc.
26	**026 : MIDI Check** OK: **026 : MIDI Check** **OK** NG: **026 : MIDI Check** **NG**	Checking MIDI. Connect the [MIDI IN] terminal and [MIDI OUT] terminal with a MIDI cable and then execute the test. Check that C4 is played and **"MIDI Check OK"** is displayed on the LCD.
27	**027 : USB to Device/Host Check** 1: **027 : USB to Device/Host Check** **Connect Device – Host** 2: **027 : USB to Device/Host Check** **Device – Host OK** 3: **027 : USB to Device/Host Check** **Connect USB Storage** OK: **027 : USB to Device/Host Check** **OK** NG: **027 : USB to Device/Host Check** **NG**	Checking USB Device/Host. Enter the test with the [START/STOP] button and **"Connect Device – Host"** will be shown on the LCD. When a USB cable is connected to the [USB TO DEVICE] and [USB TO HOST] terminals, **"Device – Host OK"** is shown on the LCD and quickly followed by **"Connect USB Storage"**. Disconnect the USB cable from the [USB TO DEVICE] and [USB TO HOST] terminals and then connect a USB storage device (USB flash memory, etc.) to [USB TO DEVICE] terminal. Check that C4 will be played and **"USB to Device/Host Check OK"** will be shown on the LCD.
28	**028 : USB Storage Device Check** When a USB storage device is not connected: **028 : USB Storage Device Check** **NO DISK** When a USB storage device is unformatted: **028 : USB Storage Device Check** **UNFORMAT DISK** When a USB storage device is protected: **028 : USB Storage Device Check** **PROTECT DISK** OK: **028 : USB Storage Device Check** **OK** NG: **028 : USB Storage Device Check** **NG**	Testing if USB Storage devices can be used. Connect a USB storage device (USB flash memory, etc.) to the [USB TO DEVICE] terminal and execute the test. If a USB storage device is not connected, **"NO DISK"** is shown on the LCD. If a USB storage device is unformatted, "**UNFORMAT DISK**" is shown on the LCD. If a USB storage device is protected, "**PROTECT DISK**" is shown on the LCD. 1. Conduct sector read/write tests at ten points. 2. Reads every 100 sectors from sector 0. 3. Compares with the data after sector writing to confirm agreement. Check that **"USB Storage Device Check OK"** is displayed on the LCD.
29	**029 : Keyboard Type Check** OK: **029 : Keyboard Type Check** **OK** **(16M)**	Checking Keyboard Type. Check that **"Keyboard Type Check OK (16M)"** is displayed on the LCD.
30	**030 : ROM Check2** OK: **030 : ROM Check2** **OK** NG: **030 : ROM Check2** **MAIN PROG ROM (IC19) NG**	Checking the ROM connected to the CPU bus. (Complete check) Check that **"ROM Check2 OK"** is displayed on the LCD. It will take about 9 seconds for the check.

Test No.	LCD display	Test descriptions, judging conditions, etc.
31	**031 : RAM Check2** OK: **031 : RAM Check2** **OK** NG: **031 : RAM Check2** **MAIN SDRAM (IC2, 6) NG**	Checking the RAM connected to the CPU bus. (Complete check) Check that **"RAM Check2 OK"** is displayed on the LCD. It will take about 2 seconds for the check.
32	**032 : BACKUP ROM Check2** OK: **032 : BACKUP ROM Check2** **OK** NG: **032 : BACKUP ROM Check2** **BACKUP (IC20) NG**	Checking the BACKUP ROM connected to the CPU bus. (Complete check) Check that **"BACKUP ROM Check2 OK"** is displayed on the LCD. It will take about 107 seconds for the check.
33	**033 : Wave ROM Check2** OK: **033 : Wave ROM Check2** **OK** NG: **033 : Wave ROM Check2** **Wave ROM (IC302, 309) NG**	Checking the WAVE ROM connected to the TG bus. (Complete check) Check that **"Wave ROM Check2 OK"** is displayed on the LCD. It will take about 97 seconds for the check.
34	**034 : Effect RAM Check2** OK: **034 : Effect RAM Check2** **OK** NG: **034 : Effect RAM Check2** **TG1 (IC305) NG**	Checking the Effect RAM connected to the TG bus. (Complete check) Check that **"Effect RAM Check2 OK"** is displayed on LCD. It will take about 51 seconds for the check.
39	**039 : Factory Set**	**If the Factory Set is executed, the data already set will be lost.** When the power is turned on the next time, data are set to Flash ROM to be in factory default. In this test, a flag for initialization is set only (if necessary). Execution is made when the power is turned on the next time. After executing this Factory Set, make sure to execute the test No. 41 "Test Exit". **Do not turn off the power until the main screen is indicated after turning on the power the next time.**
40	**040 : ErP Check** When the ErP function is invalid: **040 : ErP Check** **No Function** When it does not turn off the power supply even if the ErP function is effective: **040 : ErP Check** **NG**	Check that ErP function works normally. ※ErP function is available for European models only. If ErP function is on, the power goes off. There is no automatic restart after the power goes off. Turn the power back on manually and make sure startup proceeds.
41	**041 : Test Exit**	This will leave the test program and change to the play mode. **Do not turn off the power until the main screen is indicated after executing the Test Exit.**

• Other Tests

AUX IN

Check that the output is as shown in the following table when signals are input to the AUX IN.

INPUT \ OUTPUT	OUTPUT (10 kΩ load)		PHONES (33 Ω load)	
	L/L+R	R	L	R
AUX IN L/L+R: Sine wave (1 kHz, + 12 dBu) R: No input	+8.0 ± 2 dBu	-40.0 dBu or less	-3.5 ± 2 dBu	-40.0 dBu or less
AUX IN L/L+R: No input R: Sine wave (1 kHz, + 12 dBu)	-40.0 dBu or less	+8.0 ± 2 dBu	-40.0 dBu or less	-3.5 ± 2 dBu

Popping Noise Check

Connect the oscilloscope to the L/R of the [PHONES] jack (33 Ω load) and turn on and then off the [STANDBY/ON] switch. Make sure that popping noise level is 1.0 Vp-p or less, and that no abnormal sound or popping noise is output from the speakers.

Switch Test Sequence

Turn	SW Name / Display	Note number
1	DEMO	C2
2	SELECT	C#2
3	SCORE	D2
4	LYRICS/TEXT	D#2
5	POP & ROCK	E2
6	SWING & JAZZ	F2
7	ARABIC & MAGHREBI	F#2
8	TURKISH & GREEK	G2
9	TRANSPOSE –	G#2
10	TRANSPOSE +	A2
11	REPEAT	A#2
12	GUIDE	B2
13	EXTRA TR	C3
14	TR 2	C#3
15	TR 1	D3
16	BALLAD	D#3
17	LATIN & BALLROOM	E3
18	KHALIGI	F3
19	WORLD	F#3
20	METRONOME	G3
21	TAP TEMPO	G#3
22	REC	A3
23	■ (STOP)	A#3
24	►/II (PLAY/PAUSE)	B3
25	◄◄ (REW)	C4
26	►► (FF)	C#4
27	DANCE	D4
28	ENTERTAINMENT	D#4
29	IRANIAN	E4
30	EXPANSION/USER	F4
31	TEMPO –	F#4
32	TEMPO +	G4
33	FADE IN/OUT	G#4
34	OTS LINK	A4
35	AUTO FILL IN	A#4
36	ACMP	B4
37	INTRO Ⅰ	C5
38	INTRO Ⅱ	C#5
39	INTRO Ⅲ	D5
40	MAIN VARIATION A	D#5
41	MAIN VARIATION B	E5
42	MAIN VARIATION C	F5
43	MAIN VARIATION D	F#5
44	BREAK	G5
45	ENDING/rit. Ⅰ	G#5
46	ENDING/rit. Ⅱ	A5
47	ENDING/rit. Ⅲ	A#5
48	SYNC STOP	B5
49	SYNC START	C6
50	START/STOP	C2
51	A	C#2
52	B	D2
53	C	D#2
54	D	E2
55	E	F2
56	BALANCE	F#2
57	MIXING CONSOLE	G2
58	CHANNEL ON/OFF	G#2
59	DIRECT ACCESS	A2
60	1▲ (1-U)	A#2
61	2▲ (2-U)	B2
62	3▲ (3-U)	C3
63	4▲ (4-U)	C#3
64	5▲ (5-U)	D3
65	6▲ (6-U)	D#3
66	7▲ (7-U)	E3
67	8▲ (8-U)	F3
68	1▼ (1-L)	F#3
69	2▼ (2-L)	G3
70	3▼ (3-L)	G#3
71	4▼ (4-L)	A3
72	5▼ (5-L)	A#3
73	6▼ (6-L)	B3
74	7▼ (7-L)	C4
75	8▼ (8-L)	C#4
76	TAB ◄	D4
77	TAB ►	D#4
78	F	E4
79	G	F4
80	H	F#4
81	I	G4
82	J	G#4
83	FUNCTION	A4
84	USB	A#4
85	SCALE TUNE	B4
86	EXIT	C5
87	REGIST BANK –	C#5
88	REGIST BANK +	D5
89	FREEZE	D#5
90	MEMORY	E5
91	REGISTRATION MEMORY 1	F5
92	REGISTRATION MEMORY 2	F#5
93	REGISTRATION MEMORY 3	G5
94	REGISTRATION MEMORY 4	G#5
95	REGISTRATION MEMORY 5	A5
96	REGISTRATION MEMORY 6	A#5
97	REGISTRATION MEMORY 7	B5
98	REGISTRATION MEMORY 8	C6
99	MUSIC FINDER	C2
100	PART SELECT LEFT	C#2
101	PART SELECT RIGHT 1	D2
102	PART SELECT RIGHT 2	D#2
103	PIANO	E2
104	GUITAR & BASS	F2
105	ORGAN & ACCORDION	F#2
106	CHOIR & PAD	G2
107	ORIENTAL	G#2
108	E. PIANO	A2
109	SAXOPHONE	A#2
110	TRUMPET	B2
111	SYNTH. & FX	C3
112	PERC. & DRUM KIT	C#3
113	ENTER	D3
114	PART ON/OFF LEFT HOLD	D#3
115	PART ON/OFF LEFT	E3
116	PART ON/OFF RIGHT 1	F3
117	PART ON/OFF RIGHT 2	F#3
118	STRINGS	G3
119	FLUTE & WOODWIND	G#3
120	BRASS	A3
121	ORGAN FLUTES	A#3
122	EXPANSION/USER	B3
123	MULTI PAD CONTROL SELECT	C4
124	MULTI PAD CONTROL 1	C#4
125	MULTI PAD CONTROL 2	D4
126	MULTI PAD CONTROL 3	D#4
127	MULTI PAD CONTROL 4	E4
128	MULTI PAD CONTROL STOP	F4
129	ONE TOUCH SETTING 1	F#4
130	ONE TOUCH SETTING 2	G4
131	ONE TOUCH SETTING 3	G#4
132	ONE TOUCH SETTING 4	A4
133	HARMONY/ECHO	A#4
134	TOUCH	B4
135	SUSTAIN	C5
136	MONO	C#5
137	DSP	D5
138	VARI.	D#5
139	UPPER OCTAVE –	E5
140	UPPER OCTAVE +	F5
141	SCALE SETTING C#	F#5
142	SCALE SETTING D#	G5
143	SCALE SETTING F#	G#5
144	SCALE SETTING G#	A5
145	SCALE SETTING A#	A#5
146	SCALE SETTING C	B5
147	SCALE SETTING D	C6
148	SCALE SETTING E	C2
149	SCALE SETTING F	C#2
150	SCALE SETTING G	D2
151	SCALE SETTING A	D#2
152	SCALE SETTING B	E2
153	MEMORY	F2
154	SCALE MEMORY 1	F#2
155	SCALE MEMORY 2	G2
156	SCALE MEMORY 3	G#2
157	SCALE MEMORY 4	A2
158	SCALE MEMORY 5	A#2
159	SCALE MEMORY RESET	B2

JOYSTICK CALIBRATION MODE

1. Startup

Turn on the power switch while pressing the [J] button and the [FUNCTION] button.

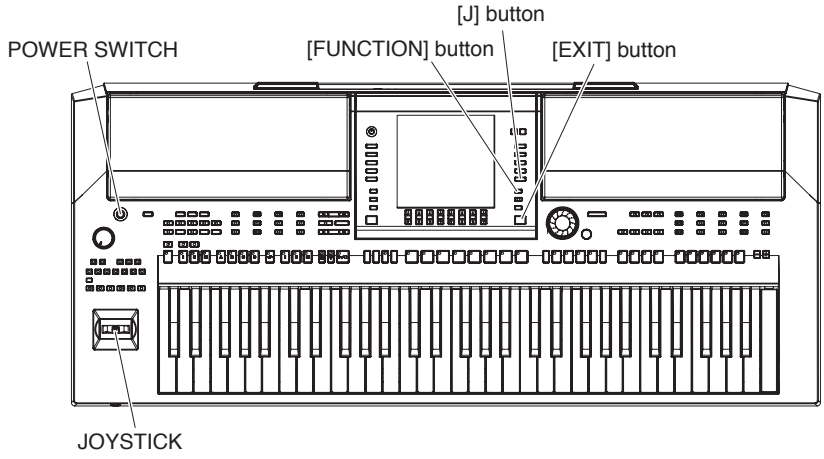

Upon startup, the below calibration setup screen appears.

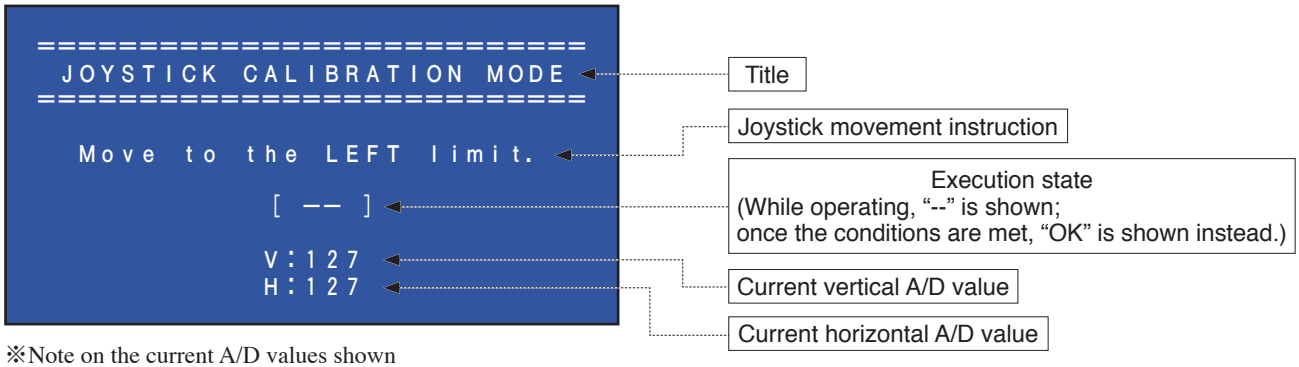

※Note on the current A/D values shown
Current A/D values are displayed in a range from 0 to 255.
As displayed here, 0 is the minimum, 127 is the center, and 255 is the maximum, but individual joysticks may vary in the values shown.

2. Calibration of the horizontal minimum

Push the joystick all the way to the left.
Voltage in a specified range will be detected, and, if its value does not change for 1 second, "OK" will be shown.
Then sine wave C4 will sound for 0.3 seconds.
After it stops, comes calibration of the horizontal maximum.

[Working]



[OK]

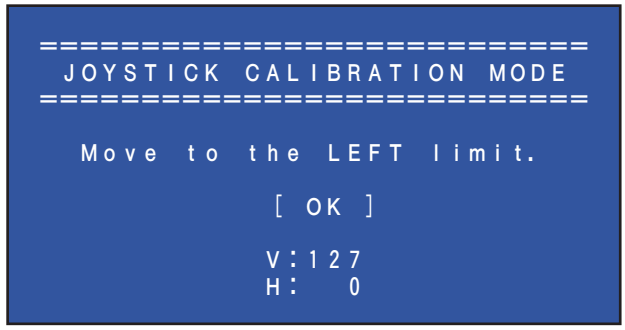

3. Calibration of the horizontal maximum

Push the joystick all the way to the right.
Voltage in a specified range will be detected, and, if its value does not change for 1 second, “OK” will be shown.
Then sine wave C4 will sound for 0.3 seconds.
After it stops, comes calibration of the vertical maximum.

[Working]

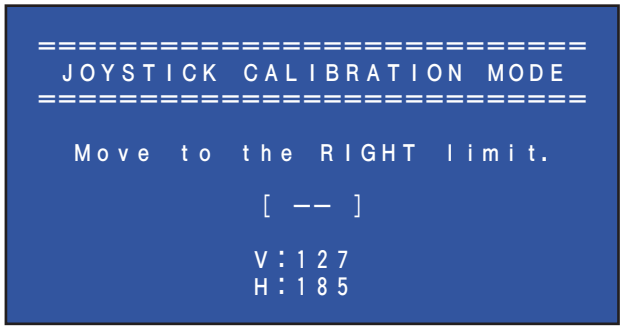

[OK]

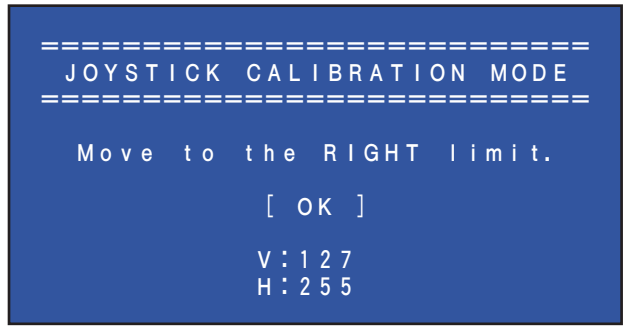

4. Calibration of the vertical maximum

Push the joystick all the way to the upper.
Voltage in a specified range will be detected, and, if its value does not change for 1 second, “OK” will be shown.
Then sine wave C4 will sound for 0.3 seconds.
After it stops, comes calibration of the vertical minimum.

[Working]

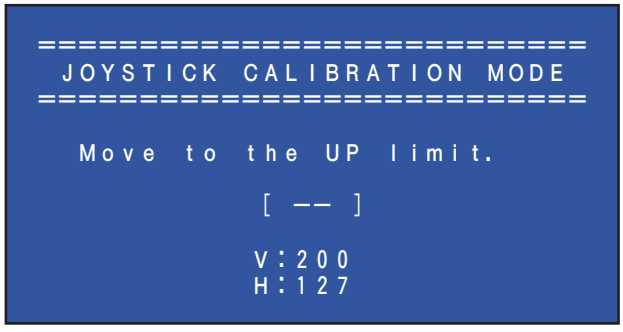

[OK]

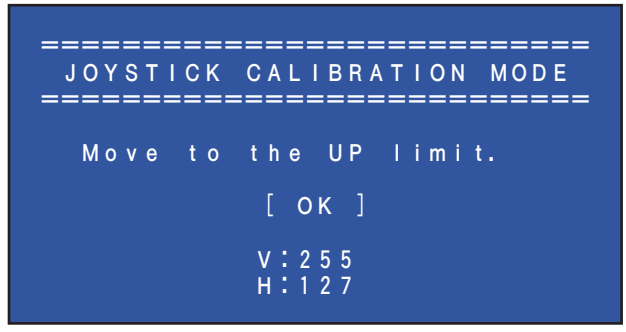

5. Calibration of the vertical minimum

Push the joystick all the way to the lower.
Voltage in a specified range will be detected, and, if its value does not change for 1 second, “OK” will be shown.
Then sine wave C4 will sound for 0.3 seconds.
After it stops, comes saving the calibration.

[Working]

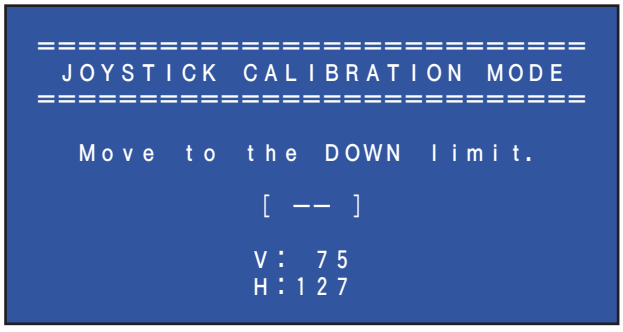

[OK]

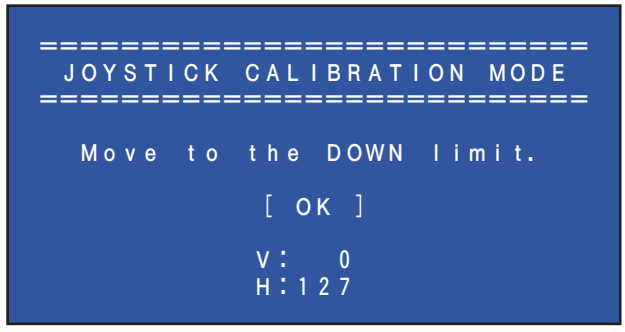

6. Saving the calibration

The calibration is saved automatically after calibration of the vertical minimum completes normally.
The calibration values are saved in the calibration value storage area of the backup flash.
Check that the calibration values are saved successfully.

※ Caution
Do not turn off the instrument’s power while saving.

[When saved successfully]

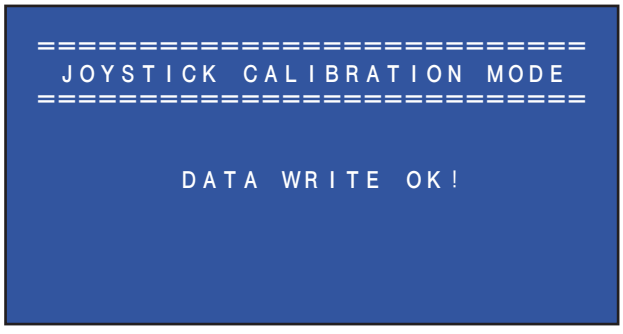

[When saving failed]

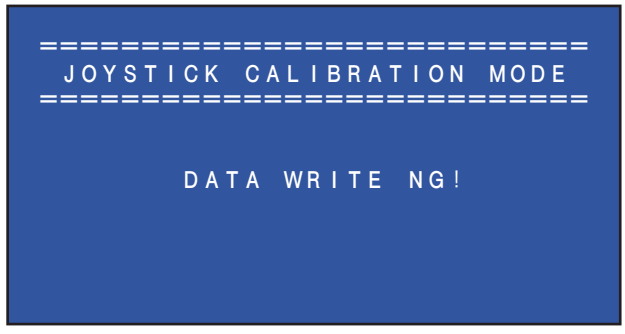

7. Completion

Press the [EXIT] button and restart or turn off the instrument.

SAVING FILES

This operation lets you save your original data (such as Songs you've recorded and Voices you've edited) to a file. The explanations here apply when you save your recorded performance as a Song file.

1 **In the Song selection display, select the appropriate tab (USER or USB) to which you want to save the data by using the TAB [◄] [►] buttons.**

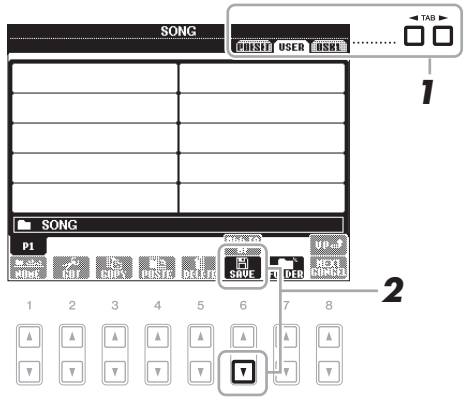

2 **Press the [6▼] (SAVE) button to call up the file naming display.**

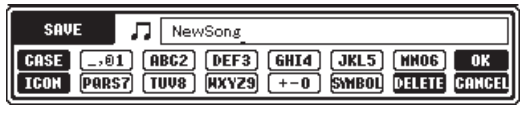

3 **Enter the file name.**

Even if you skip this step, you can rename the file at any time after saving.

4 **Press the [8▲] (OK) button to save the file.**

The saved file will be automatically located at the appropriate position among the files in alphabetical order.

NOTE

If you want to cancel the Save operation, press the [8▼] (CANCEL) button.

DATA BACKUP

This procedure backs up all data stored in USER drive (except Expansion Voices/Styles and Protected Songs) and all instrument settings. For maximum data security Yamaha recommends that you copy or save your important data to a USB storage device. This provides a convenient backup if the internal memory is damaged.

1 Connect the backup USB storage device (destination).

2 Call up the operation display.

[FUNCTION] → [I] UTILITY → TAB [◄][►] OWNER

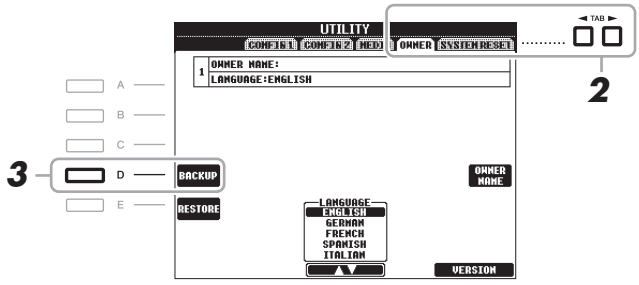

3 Press the [D] (BACKUP) button to save the data to the USB storage device.

To restore the data, press the [E] (RESTORE) button in this display. When the operation is complete, the instrument will be restarted automatically.

NOTICE

Move the Protected Songs which are saved to the USER Page before restoring. If the Songs are not moved, the operation deletes the data.

NOTE

Completing the backup/restore operation may take a few minutes.

NOTE

To save the Song, Style, Multi Pad, Registration Memory Bank, Scale Tune Bank and Voice independently, execute the Copy and Paste operation from the File Selection display.

NOTE

To save the Music Finder Record, Effect, MIDI Template and System File, call up the operation display: [FUNCTION] → [I] UTILITY → TAB [◄] [►] SYSTEM RESET. For more information, refer to the “SYSTEM RESET” section (page 55).

RESTORING THE FACTORY-PROGRAMMED SETTINGS

While holding the C6 key (right-most key on the keyboard), turn the [⏻] (Standby/On) switch on. This restores the all settings to the factory default.

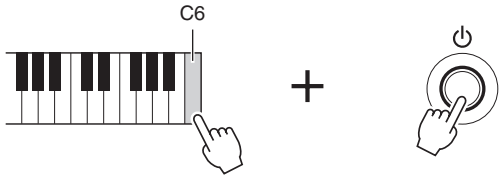

NOTE

If you want to initialize only the Registration Memory setting, turn the [⏻] (Standby/On) switch on while holding the B5 key.

You can also restore a specified setting to the factory default value, or save/load your own reset settings. Call up the operation display: [FUNCTION] → [I] UTILITY → TAB [◄] [►] SYSTEM RESET. For details, refer to the “SYSTEM RESET” section (page 55).

SYSTEM RESET

There are two reset methods in the SYSTEM RESET display: Factory Reset and Custom Reset.

Call up the operation display.
[FUNCTION] → [I] UTILITY → TAB [◄][►] SYSTEM RESET

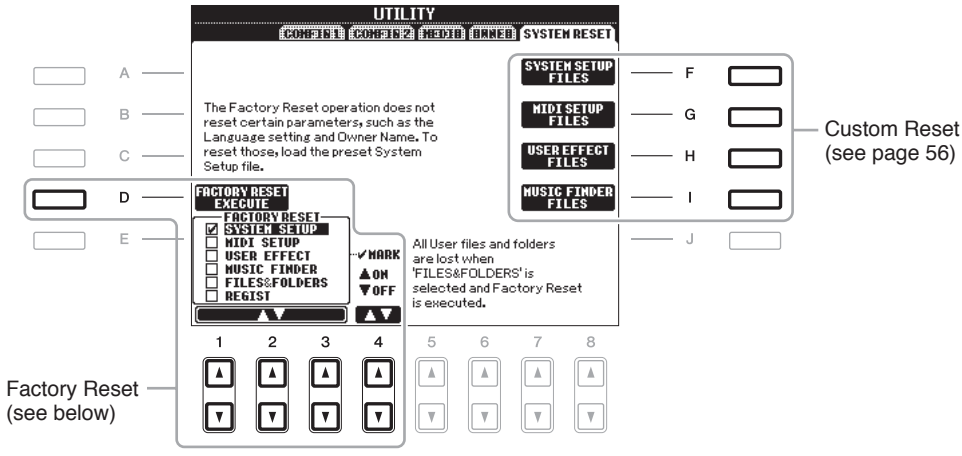

Factory Reset—Restoring the Factory Programmed Settings

This function lets you restore the status of the instrument to the original factory settings.

1 Select the desired item to be restored by using [1 ▲▼]–[3 ▲▼] buttons and add a checkmark to it by pressing the [4 ▲] (MARK ON) button.

To remove the checkmark, press the [4 ▼] (MARK OFF) button.

SYSTEM SETUP	Restores the System Setup parameters to the original factory settings. Refer to the Data List for details about which parameters belong to the System Setup.
MIDI SETUP	Restores the MIDI settings including the MIDI templates on the USER tab display to the original factory status.
USER EFFECT	Restores the User Effect settings including the User Effect types and User Master EQ types created via the Mixing Console display to the original factory settings.
MUSIC FINDER	Restores the Music Finder data (all records) to the original factory settings.
FILES & FOLDERS	Deletes all files and folders including the Expansion folder stored in the USER tab display.
REGIST	Temporarily deletes the current Registration Memory settings of the selected Bank. The same can be done also by turning the [⏻] (Standby/On) switch on while holding the B5 key (right-most B key on the keyboard).

2 Press the [D] (FACTORY RESET) button to execute the Factory Reset operation for all check-marked items.

Custom Reset—Saving and Recalling Your Original Settings as a Single File

For the items below, you can save your Original Settings as a Single File for future recall.

1 **Make all desired settings on the instrument.**

2 **Call up the operation display.**

[FUNCTION] → [I] UTILITY → TAB [◄][►] SYSTEM RESET

3 **Press one of the [F]–[I] buttons to call up the relevant display for saving your data.**

[F]	SYSTEM SETUP FILES	Parameters set on the various displays such as the [FUNCTION] → [I] UTILITY are handled as a single System Setup file. Refer to the Data List for details on which parameters belong to the System Setup.
[G]	MIDI SETUP FILES	The MIDI settings including the MIDI templates on the USER tab display are handled as a single file.
[H]	USER EFFECT FILES	The User Effect settings including the User Effect types and User Master EQ types created via the Mixing Console displays are managed as a single file.
[I]	MUSIC FINDER FILES	All the preset and created records of the Music Finder are handled as a single file.

4 **Use the TAB [◄][►] buttons to select one of the tabs (other than the PRESET) to which your settings will be saved.**

5 **Press the [6 ▼] (SAVE) button to save your file (page 52).**

6 **To recall your file, press the desired [F]–[I] buttons in the SYSTEM RESET display, then select the desired file.**

CONNECTING TO A PERSONAL COMPUTER

By connecting a computer to the [USB TO HOST] terminal, you can transfer data between the instrument and the computer via MIDI, and use the computer to control, edit and organize data on the instrument.

1 **Before connection, turn off the power of this instrument.**

2 **Start the computer.**

Do not start any applications on the computer.

3 **Connect the instrument and computer via a USB cable.**

Make the connection directly without passing through a USB hub.

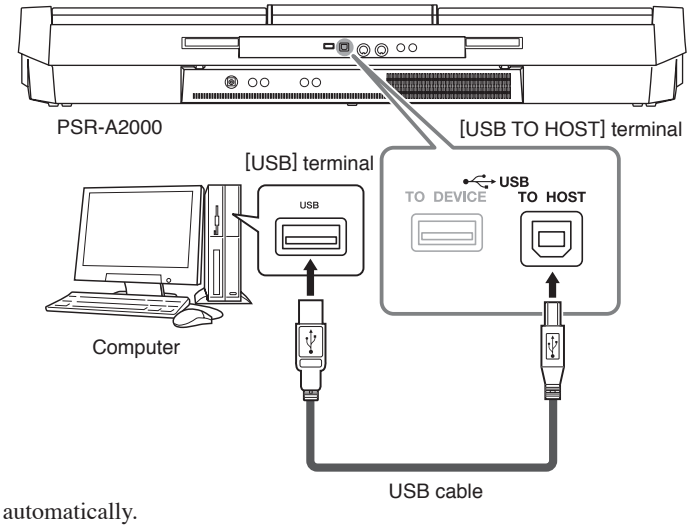

4 **Turn on the power of this instrument.**

The USB-MIDI driver will be installed to the computer automatically.

OS: Windows XP (SP3 or later)/Windows Vista *Only 32-bit, Windows 7, Mac OS X Version 10.5.0–10.6.x

When data communication is unstable or some problem occurs even though you've executed the above instructions, download the Yamaha Standard USB-MIDI driver from the following URL then install it to your computer. For instructions on installation, refer to the Install Guide included in the package file.

http://download.yamaha.com/

For details about OS for Yamaha Standard USB-MIDI driver, visit the URL above.

Precautions when using the [USB TO HOST] terminal

When connecting the computer to the [USB TO HOST] terminal, make sure to observe the following points. Failing to do so risks freezing the computer and corrupting or losing the data. If the computer or the instrument freezes, restart the application software or the computer OS, or turn the power to the instrument off then on again.

NOTICE

- **Use an AB type USB cable of less than 3 meters. USB 3.0 cables cannot be used.**
- **Before connecting the computer to the [USB TO HOST] terminal, exit from any power-saving mode of the computer (such as suspend, sleep, standby).**
- **Before turning on the power to the instrument, connect the computer to the [USB TO HOST] terminal.**
- **Execute the following before turning the power to the instrument on/off or plugging/unplugging the USB cable to/from the [USB TO HOST] terminal.**
  - **Quit any open application software on the computer.**
  - **Make sure that data is not being transmitted from the instrument. (Data is transmitted only by playing notes on the keyboard or playing back a song.)**
- **While the computer is connected to the instrument, you should wait for six seconds or more between these operations: (1) when turning the power of the instrument off then on again, or (2) when alternately connecting/disconnecting the USB cable.**

SYSTEM BOOTING FLOWCHART

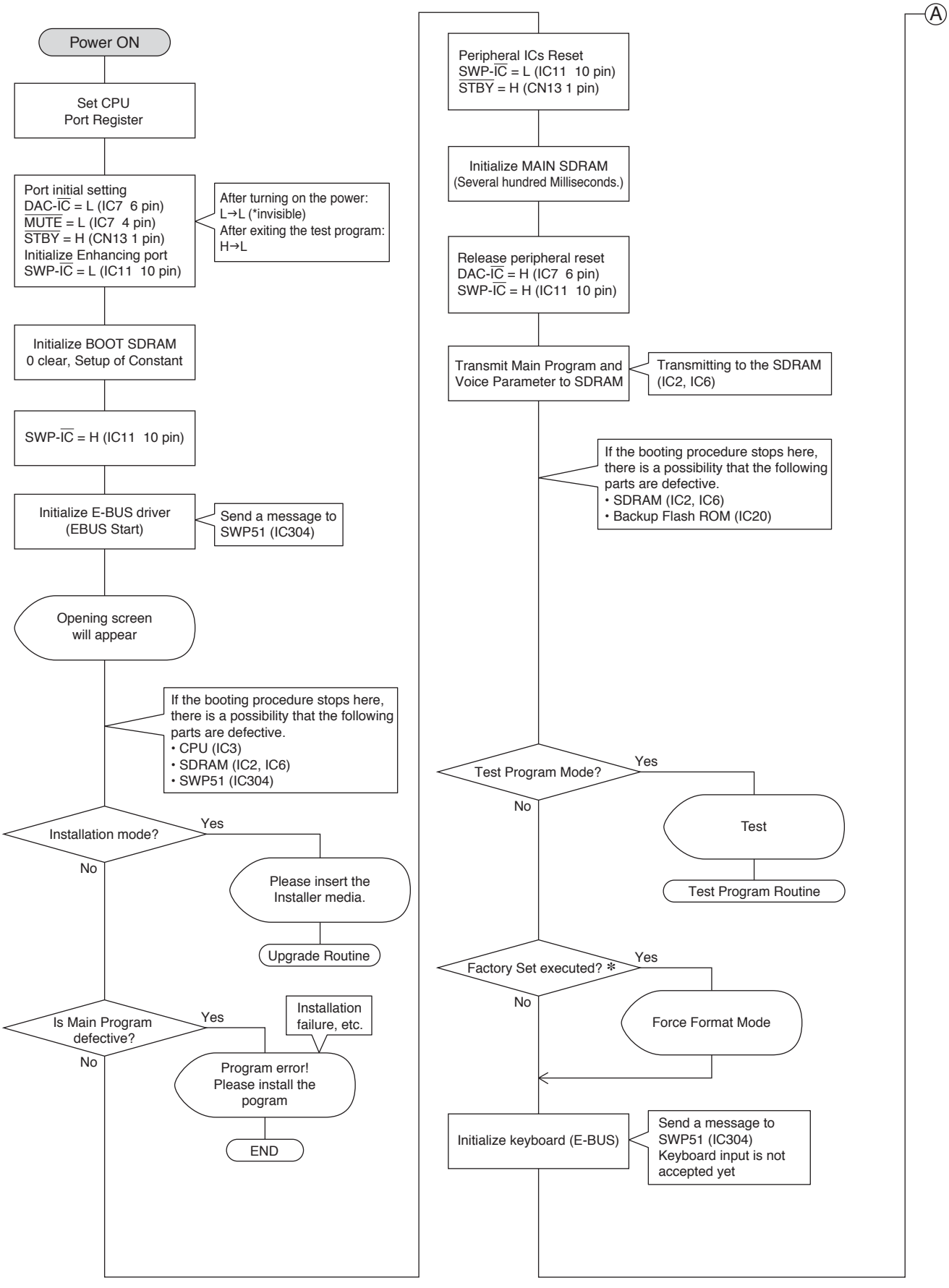

*** "After executing Factory Set" refers to the condition when the power is turned on after executing "Factory Set" in the Test Program.**

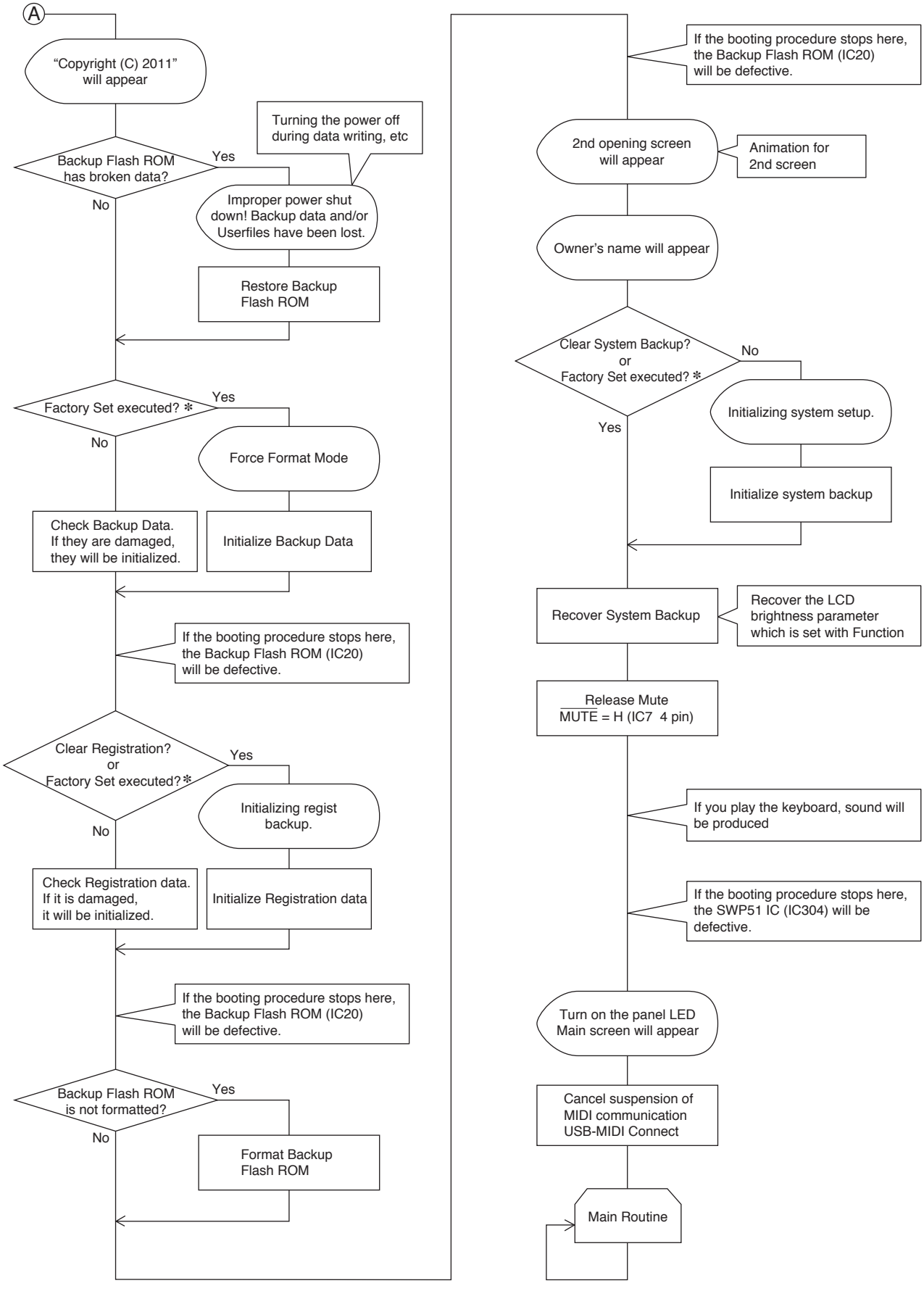
A
"Copyright (C) 2011" will appear
Backup Flash ROM has broken data?
Yes
No
Turning the power off during data writing, etc
Improper power shut down! Backup data and/or Userfiles have been lost.
Restore Backup Flash ROM
Factory Set executed? *
Yes
No
Force Format Mode
Check Backup Data. If they are damaged, they will be initialized.
Initialize Backup Data
If the booting procedure stops here, the Backup Flash ROM (IC20) will be defective.
Clear Registration? or Factory Set executed? *
Yes
No
Initializing regist backup.
Check Registration data. If it is damaged, it will be initialized.
Initialize Registration data
If the booting procedure stops here, the Backup Flash ROM (IC20) will be defective.
Backup Flash ROM is not formatted?
Yes
No
Format Backup Flash ROM
If the booting procedure stops here, the Backup Flash ROM (IC20) will be defective.
2nd opening screen will appear
Animation for 2nd screen
Owner's name will appear
Clear System Backup? or Factory Set executed? *
No
Yes
Initializing system setup.
Initialize system backup
Recover System Backup
Recover the LCD brightness parameter which is set with Function
Release Mute
MUTE = H (IC7 4 pin)
If you play the keyboard, sound will be produced
If the booting procedure stops here, the SWP51 IC (IC304) will be defective.
Turn on the panel LED Main screen will appear
Cancel suspension of MIDI communication USB-MIDI Connect
Main Routine

DIGITAL WORKSTATION

PSR-A2000

PARTS LIST

■ CONTENTS

OVERALL ASSEMBLY 2
UPPER CASE ASSEMBLY 5
LOWER CASE ASSEMBLY 7
KEYBOARD ASSEMBLY 9
JOYSTICK 10
LCD ASSEMBLY 11
ELECTRICAL PARTS 12–33

Notes : DESTINATION ABBREVIATIONS

A : Australian model	M : South African model
B : British model	O : Chinese model
C : Canadian model	P : Brazilian model
D : German model	Q : South-east Asia model
E : European model	T : Taiwan model
F : French model	U : U.S.A. model
H : North European model	V : General export model (110V)
I : Indonesian model	W: General export model (220V)
J : Japanese model	N,X: General export model
K : Korean model	Y : Export model

■ WARNING

Components having special characteristics are marked ⚠ and must be replaced with parts having specification equal to those originally installed.

- The numbers “QTY” show quantities for each unit.
- The parts with “--” in “PART NO.” are not available as spare parts.
- This mark “ } ” in the REMARKS column means these parts are interchangeable.
- The second letter of the shaded ( ) part number is O, not zero.
- The second letter of the shaded ( ) part number is I, not one.

OVERALL ASSEMBLY

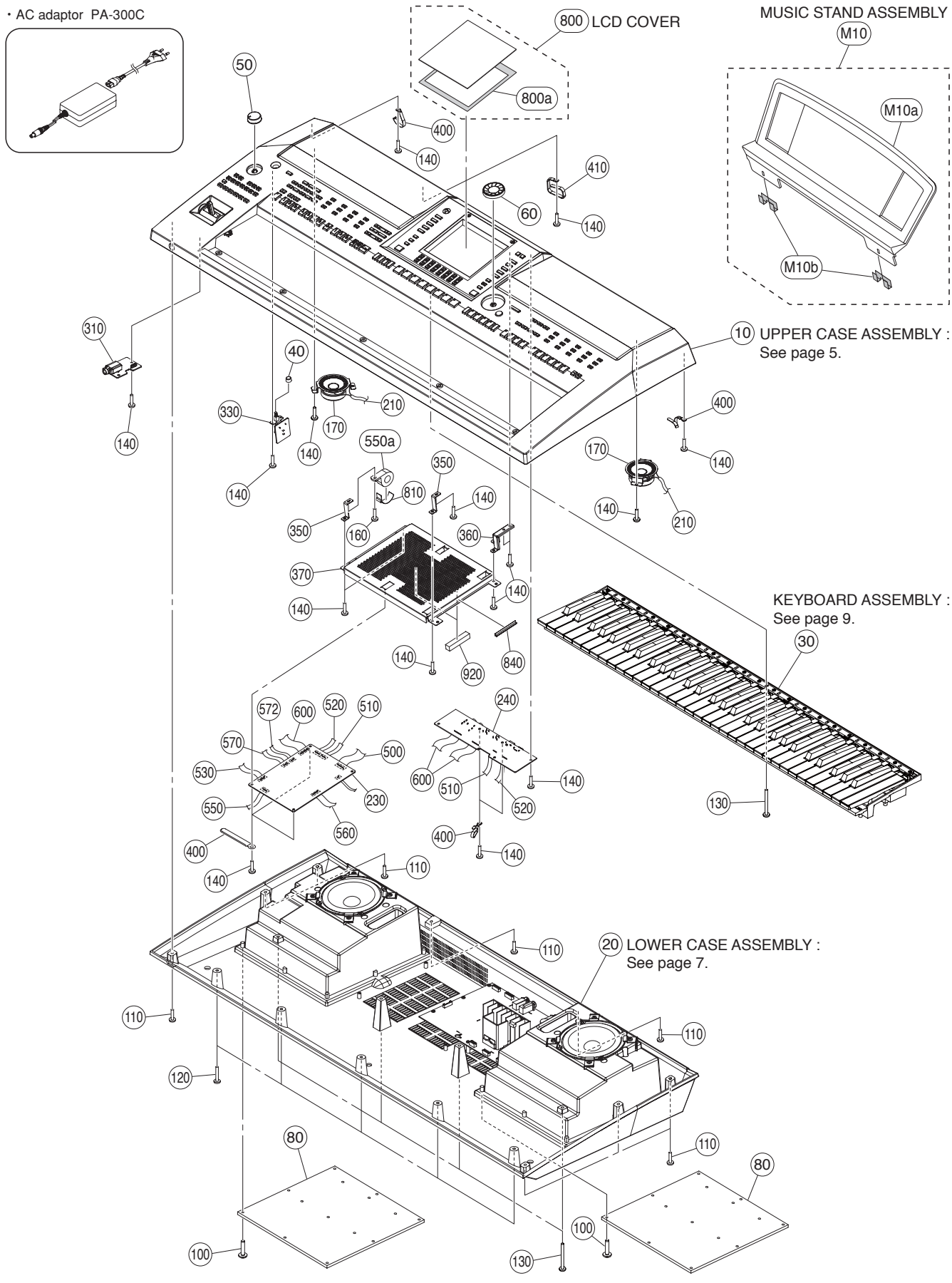

● LOWER CASE ASSEMBLY

< Top view >

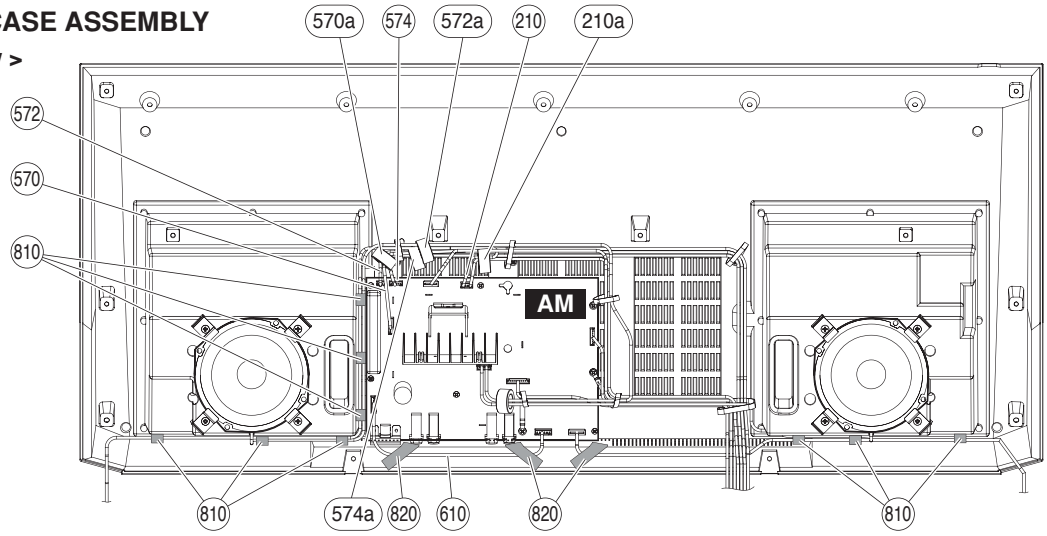

● UPPER CASE ASSEMBLY

< Bottom view >

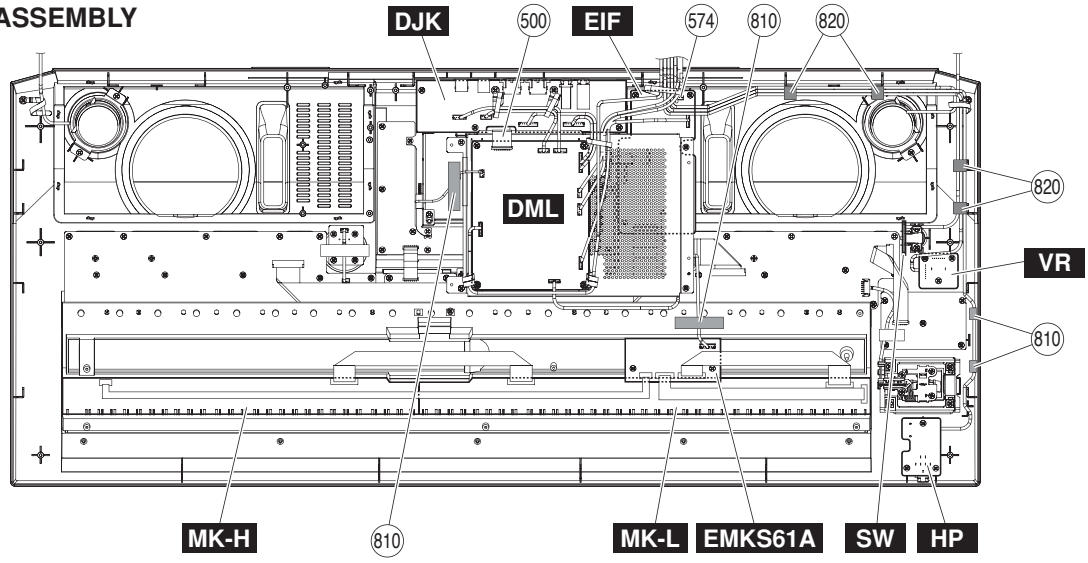

● UPPER CASE ASSEMBLY

< Bottom view >

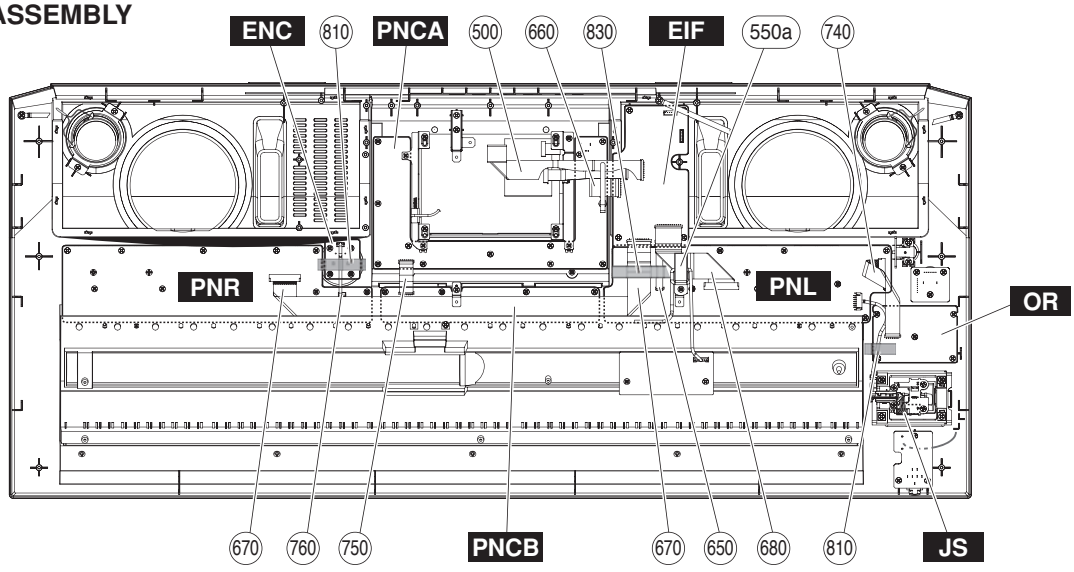

	REF NO.	PART NO.	DESCRIPTION		部品名	REMARKS	QTY	RANK
			OVERALL ASSEMBLY		総組立	PSR-A2000		
		--	OVERALL ASSEMBLY		総組立	(WY01960)		
	10	--	UPPER CASE ASSEMBLY		上ケースAss'y	(WY02220)		
	20	--	LOWER CASE ASSEMBLY		下ケースAss'y	(WY02240)		
	30	**WB91420R**	KEYBOARD ASSEMBLY	16M C61-2M-EBUS	16M鍵盤EMKSA			18
	40	**V715120R**	PUSH KNOB BLACK		プッシュツマミクロ	STANDBY/ON		01
	50	**VU43240R**	KNOB V BLACK		Vツマミ	MASTER VOLUME		01
	60	**WJ584000**	ENCORDER KNOB BLACK		エンコーダツマミ	DATA ENTRY		04
	80	**WJ044200**	BOTTOM BOARD		底板		2	03
	100	**WF15410R**	BIND HEAD TAPPING SCREW-B	4.0X16 MFZN2W3	Bタイト十BIND		28	01
	110	**WE98740R**	BIND HEAD TAPPING SCREW-B	3.0X12 MFZN2W3	Bタイト十BIND		8	01
	120	**WE97340R**	BIND HEAD TAPPING SCREW-B	3.0X16 MFZN2W3	Bタイト十BIND		5	01
	130	**WF491001**	BIND HEAD TAPPING SCREW-B	3.0X30 MFZN2W3	Bタイト十BIND		5	01
	140	**WE774301**	BIND HEAD TAPPING SCREW-B	3.0X8 MFZN2W3	Bタイト十BIND		28	01
	160	**WF00210R**	PW HEAD TAPPING SCREW-B	3.0X12 MFZN2W3	Bタイト十PWH			01
*	170	**YD681A00**	LOUD SPEAKER	5.0cm 6ohm 10W	スピーカ	TWEETER	2	
	210	--	CONNECTOR ASSEMBLY	TW-LF XH 4P	TWーLF束線	(WR64770)		
	210a	**WD496200**	FERRITE CORE	K1 T 25X12X15	フェライトコア			
*	230	**WW421400**	CIRCUIT BOARD	DML	DMLシート			
*	240	**WW421900**	CIRCUIT BOARD	DJK	DJKシート			
*	310	**WW422200**	CIRCUIT BOARD	HP	HPシート			
*	330	**WW422000**	CIRCUIT BOARD	SW	SWシート			
	350	--	DM FIXTURE S	SMALL	DM固定金具(小)	(WH72360)	2	
	360	--	DM FIXTURE M	MAJOR	DM固定金具(大)	(WH72370)		
	370	--	SHIELD COVER U	UPPER	シールドカバー上	(WH99030)		
	400	**CB81751R**	CLIP, WIRE		束線止め		7	03
	410	**VJ77060R**	CORD CLAMPER	S-126 L=126mm	束線止め			01
	500	**WR026200**	CONNECTOR ASSEMBLY	LVDS 19P 260mm P=1.0	LVDS束線			
	510	**WR338000**	USB CABLE	5P L=100mm	USBケーブル			
	520	**WR337800**	USB CABLE	6P L=130mm	USBケーブル			
	530	--	CONNECTOR ASSEMBLY	ZH ZH 8P	ZH束線	(WR02450)		
	550	--	CONNECTOR ASSEMBLY	E-BUS2LF ZH 7P/PH 7P	EーBUS2LF束線	(WS51600)		
	550a	**V312290R**	DATA LINE FILTER	K1 NFT-13BK2	データラインフィルタ			06
	550a	**VD94780R**	DATA LINE FILTER	ESD-R-25D-B	データラインフィルタ			05
	560	--	CONNECTOR ASSEMBLY	ANALOG ZH 9P/PHR-11P	ANALOG束線	(WR02610)		
	570	--	CONNECTOR ASSEMBLY	3D-LF PHR-5P/XH 6P	3DーLF束線	(WR64730)		
	570a	**WD496200**	FERRITE CORE	K1 T 25X12X15	フェライトコア			
	572	--	CONNECTOR ASSEMBLY	5D-LF PH 4P-900	5DーLF束線	(WR64750)		
	572a	**WD496200**	FERRITE CORE	K1 T 25X12X15	フェライトコア			
	574	--	CONNECTOR ASSEMBLY	5L-LF PH 6P-800	5LーLF束線	(WR64760)		
	574a	**WD496200**	FERRITE CORE	K1 T 25X12X15	フェライトコア			
	600	--	CONNECTOR ASSEMBLY	MIDI-PDL 9P/10P/13P	MIDIーPDL束線	(WR02510)		
	610	--	CONNECTOR ASSEMBLY	16V XH 6P	16V束線	(WW99760)		
	650	**MFA06080**	FLAT CABLE	6P 80mm P=1.0	カード電線			01
	660	**MFA21060**	FLAT CABLE	21P 60mm P=1.0	カード電線			01
	670	**WK547500**	FFC CABLE	PNR 23P 500mm P=1.0	FFC束線			05
	680	**WK547400**	FFC CABLE	PNL 26P 140mm P=1.0	FFC束線			03
	740	**WK737500**	FFC CABLE	OR 14P 120mm P=1.0	FFC束線			02
	750	**MFA13060**	FLAT CABLE	13P 60mm P=1.0	カード電線			01
	760	--	CONNECTOR ASSEMBLY	PH 3P-65	PH束線	(WY54000)		
*	800	**WY023600**	LCD COVER		LCDカバー印刷品			
	800a	--	DOUBLE COATED TAPE		両面粘着テープ	(WJ20240)		
	810	**VA126101**	FILAMENT TAPE	12X50	粘着テープ		16	01
	820	**VN195401**	ADHESIVE TAPE	12X70 FILAMENT	粘着テープ		7	03
	830	**V5912400**	ADHESIVE TAPE	12X90	粘着テープ			
	840	**WG526801**	ADHESIVE TAPE	15X30	アセテートクロス粘着			09
	920	--	DM CUSHION	PORONL-24	DMクッション	(WK25040)	2	
			ACCESSORIES		付属品			
*	M10	**WY019400**	MUSIC STAND ASSEMBLY		譜面立Ass'y			
	M10a	**WT836200**	MUSIC REST BLACK		譜面板			06
	M10b	--	NONWOVEN FABRIC CLOTH	60X30X0.55	不織布	(WR57560)	2	
⚠		**WQ462900**	AC ADAPTOR	PA-300C U	ACアダプター	U		10
⚠		**WQ463001**	AC ADAPTOR	PA-300C E	ACアダプター	E		13

*: New Parts

RANK: Japan only

UPPER CASE ASSEMBLY

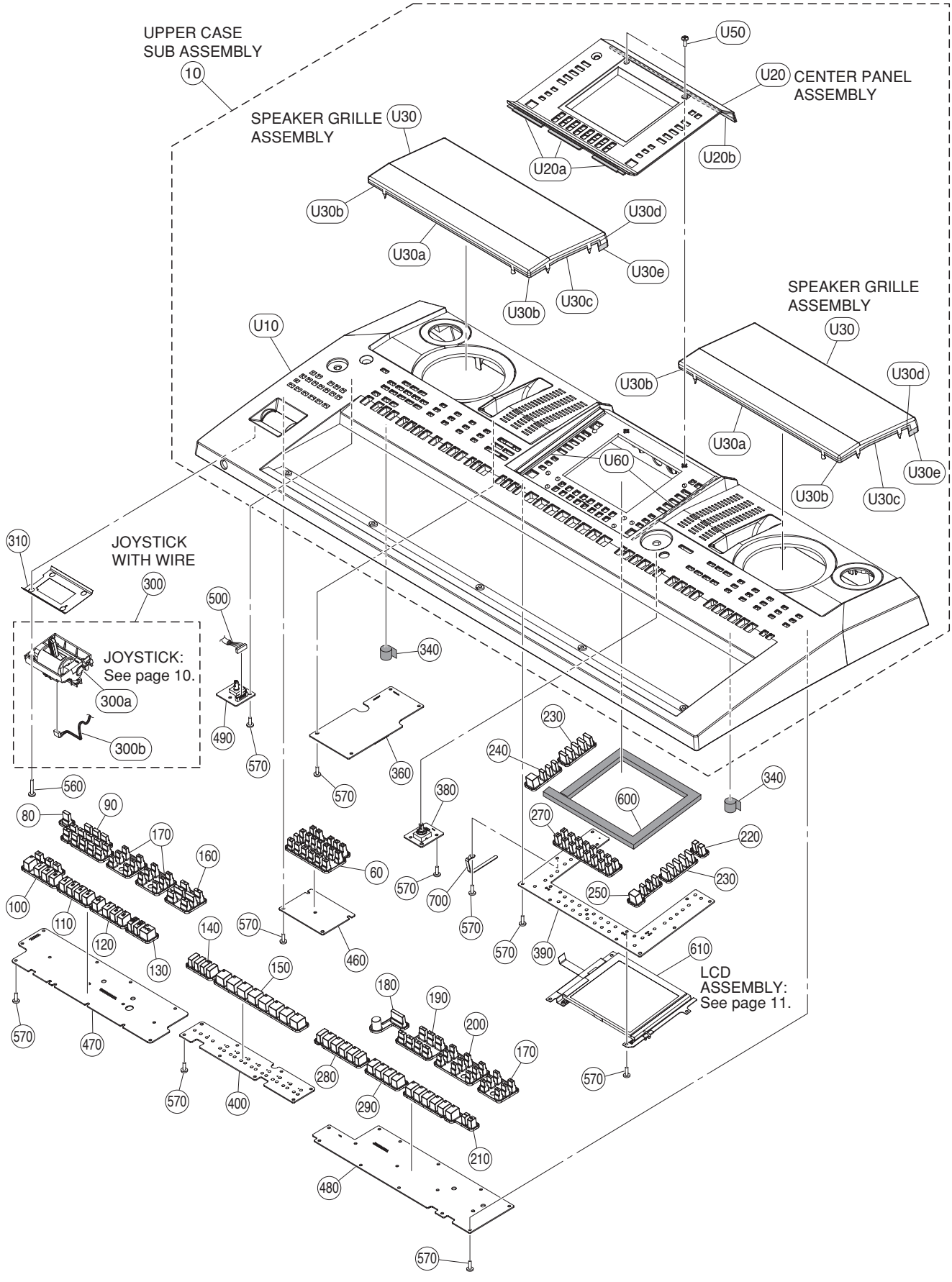

	REF NO.	PART NO.	DESCRIPTION		部品名	REMARKS	QTY	RANK
			UPPER CASE ASSEMBLY		上ケースAss'y	PSR-A2000		
		--	UPPER CASE ASSEMBLY		上ケースAss'y	(WY02220)		
	10	--	UPPER CASE SUB ASSEMBLY		上ケースサブAss'y	(WY02230)		
*	60	**WY023400**	PANEL SWITCH ASSEMBLY	X19	PNスイッチAss'y	SCALE SETTING,MEMORY, SCALE MEMORY(1-5,RESET)		
	80	**WH647900**	PANEL SWITCH	X1	PNスイッチ	DEMO		02
	90	**WJ203400**	PANEL SWITCH ASSEMBLY	X13	PNスイッチAss'y	SONG(SELECT - ►►)		04
*	100	**WZ708500**	PANEL SWITCH ASSEMBLY	X7	PNスイッチAss'y	FADE IN/OUT,OTS LINK,AUTO FILL IN,ACMP,INTRO(I-III)		
*	110	**WZ708600**	PANEL SWITCH ASSEMBLY	X4	PNスイッチAss'y	MAIN VARIATION(A,B,C,D)		
*	120	**WZ708700**	PANEL SWITCH ASSEMBLY	X4	PNスイッチAss'y	BREAK,ENDING/rit.(I-III)		
*	130	**WZ708900**	PANEL SWITCH ASSEMBLY	X3	PNスイッチAss'y	SYNC STOP,SYNC START, START/STOP		
	140	**WJ203900**	PANEL SWITCH ASSEMBLY	X4	PNスイッチAss'y	REGIST BANK(–,+),FREEZE, MEMORY		03
	150	**WJ204000**	PANEL SWITCH ASSEMBLY	X8	PNスイッチAss'y	REGISTRATION MEMORY(1-8)		04
	160	**WJ204100**	PANEL SWITCH ASSEMBLY	X6	PNスイッチAss'y	TRANSPOSE(–,+),METRONOME, TAP TEMPO,TEMPO(–,+)		03
	170	**WJ204200**	PANEL SWITCH ASSEMBLY	X6	PNスイッチAss'y	STYLE(POP&ROCK - EXPANSION/ USER),VOICE(CHOIR&PAD - EXPANSION/USER)	3	03
	180	**WH648900**	PANEL SWITCH	X2	PNスイッチ	MUSIC FINDER,ENTER		03
	190	**WJ204300**	PANEL SWITCH ASSEMBLY	X7	PNスイッチAss'y	PART SELECT,PART ON/OFF (LEFT HOLD,LEFT,RIGHT1&2)		04
	200	**WJ204400**	PANEL SWITCH ASSEMBLY	X9	PNスイッチAss'y	VOICE(PIANO - BRASS)		04
*	210	**WZ709200**	PANEL SWITCH ASSEMBLY	X8	PNスイッチAss'y	VOICE CONTROL(HARMONY/ECHO - VARI.),UPPER OCTAVE(–,+)		
	220	**WH649300**	PANEL SWITCH	X2	PNスイッチ	TAB ◄, ►		02
	230	**WH649400**	PANEL SWITCH	X5	PNスイッチ	A - E,F - J	2	02
	240	**WH649500**	PANEL SWITCH	X4	PNスイッチ	BALANCE,MIXING CONSOLE, CHANNEL ON/OFF,DIRECT ACCESS		02
	250	**WJ204600**	PANEL SWITCH ASSEMBLY	X4	PNスイッチAss'y	FUNCTION,USB,SCALE TUNE,EXIT		03
	270	**WH649800**	PANEL SWITCH	X16	PNスイッチ	1 - 8 (Up/Down)		03
*	280	**WZ709300**	PANEL SWITCH ASSEMBLY	X6	PNスイッチAss'y	MULTI PAD CONTROL (SELECT,1 - 4,STOP)		
*	290	**WZ709400**	PANEL SWITCH ASSEMBLY	X4	PNスイッチAss'y	ONE TOUCH SETTING(1 - 4)		
	300	--	JOYSTICK WITH WIRE		JS束線付き	(WY46930)		
*	300a	**WW997300**	JOYSTICK		ジョイスティック	Joystick		
*	300b	**WW997500**	CONNECTOR ASSEMBLY	JS PHR-4P/PH 7P	JS束線			
	310	--	NONWOVEN FABRIC CLOTH		不織布	(WY55320)		
	340	--	NONWOVEN FABRIC CLOTH		不織布	(WD76610)	2	
*	360	**WW422900**	CIRCUIT BOARD	EIF	EIFシート			
*	380	**WW422800**	CIRCUIT BOARD	ENC	ENCシート			
*	390	**WW422700**	CIRCUIT BOARD	PNCA	PNCAシート			
*	400	**WW422600**	CIRCUIT BOARD	PNCB	PNCBシート			
*	460	**WW422400**	CIRCUIT BOARD	OR	ORシート			
	470	**WJ012900**	CIRCUIT BOARD	PNL	PNLシート			11
	480	**WJ013000**	CIRCUIT BOARD	PNR	PNRシート			11
*	490	**WW422100**	CIRCUIT BOARD	VR	VRシート			
	500	--	CONNECTOR ASSEMBLY	MV PHR-8P	MV束線	(WR02580)		
	560	**WE97340R**	BIND HEAD TAPPING SCREW-B	3.0X16 MFZN2W3	Bタイト十BIND		4	01
	570	**WE774301**	BIND HEAD TAPPING SCREW-B	3.0X8 MFZN2W3	Bタイト十BIND		71	01
	600	--	DUST PROOF CLOTH	CALMFLEX F-2	防塵フォーム	(WJ00090)		
	610	--	LCD ASSEMBLY		LCD Ass'y	(WR35840)		
	700	**CB81751R**	CLIP, WIRE		束線止め			03
		--	UPPER CASE SUB ASSEMBLY		上ケースサブAss'y	(WY02230)		
*	U10	**WY022500**	UPPER CASE BLACK		上ケース塗装印刷品			
*	U20	**WY022800**	CENTER PANEL ASSEMBLY		C.パネルAss'y			
	U20a	--	CUSHION (PE)	60X8X1	クッション(PE)	(WJ26270)	3	
	U20b	--	NONWOVEN FABRIC CLOTH	238X8X0.5	不織布	(WJ00040)		
*	U30	**WY023200**	SP GRILLE ASSEMBLY		SPグリルAss'y		2	
	U30a	--	NONWOVEN FABRIC CLOTH	250X8X0.5	不織布	(WH95200)	4	
	U30b	--	NONWOVEN FABRIC CLOTH	60X8X0.5	不織布	(WH95210)	4	
	U30c	--	NONWOVEN FABRIC CLOTH	68X8X0.5	不織布	(WH95220)	4	
	U30d	--	NONWOVEN FABRIC CLOTH	27X8X0.5	不織布	(WH95230)	4	
	U30e	--	NONWOVEN FABRIC CLOTH	46X8X0.5	不織布	(WH95240)	4	
	U50	**WE774301**	BIND HEAD TAPPING SCREW-B	3.0X8 MFZN2W3	Bタイト十BIND		2	01
	U60	--	CUSHION (PE)	152X6X2.0	クッション(PE)	(WJ26260)	2	

*: New Parts

RANK: Japan only

LOWER CASE ASSEMBLY

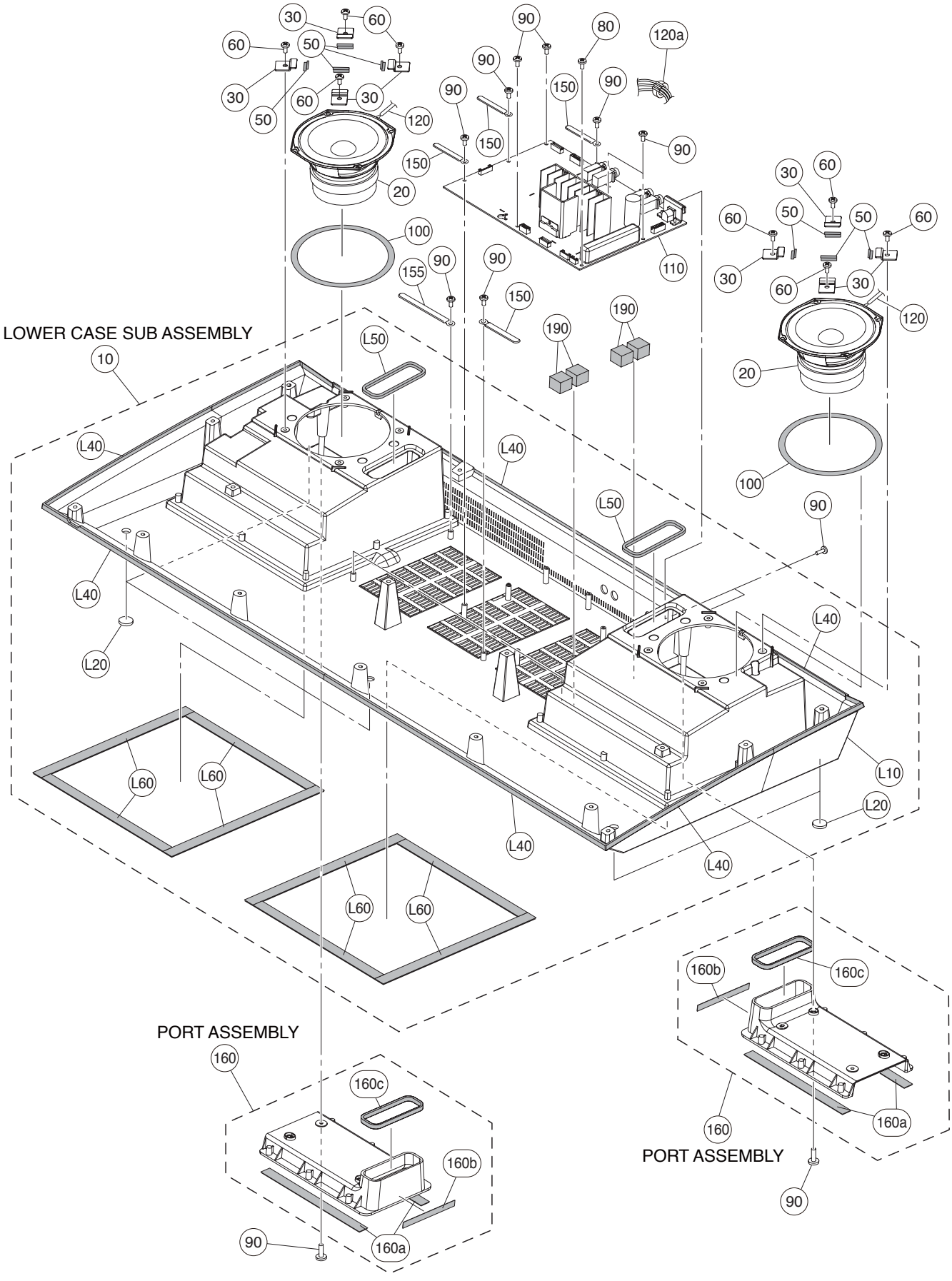

	REF NO.	PART NO.	DESCRIPTION		部品名	REMARKS	QTY	RANK
			LOWER CASE ASSEMBLY		下ケースAss'y	PSR-A2000		
		--	LOWER CASE ASSEMBLY		下ケースAss'y	(WY02240)		
	10	**WS616000**	LOWER CASE SUB ASSEMBLY		下ケースサブAss'y			11
	20	**X8535A00**	SPEAKER	12.0cm 6ohm 30W	スピーカー	WOOFER	2	08
	30	**V748070R**	SPEAKER HOLDER		ウーファー固定金具		8	01
	50	--	NONWOVEN FABRIC CLOTH	16X5X0.5	不織布	(V834600)	8	
	60	**WE97460R**	BIND HEAD TAPPING SCREW-B	4.0X8 MFZN2W3	Bタイト十BIND		8	01
	80	**WF00260R**	PW HEAD TAPPING SCREW-B	3.0X8 MFZN2W3	Bタイト十PWH			01
	90	**WE774301**	BIND HEAD TAPPING SCREW-B	3.0X8 MFZN2W3	Bタイト十BIND		21	01
	100	--	CUSHION (PE)	390X8X1	クッション(PE)	(WH95380)	2	
*	110	**WW421800**	CIRCUIT BOARD	AM	AMシート			
	120	--	CONNECTOR ASSEMBLY	WO-LF XH 5P	WOーLF束線	(WR64780)		
	120a	**WD496200**	FERRITE CORE	K1 T 25X12X15	フェライトコア			
	150	**CB81751R**	CLIP, WIRE		束線止め		6	03
	155	**VJ77060R**	CORD CLAMPER	S-126 L=126mm	束線止め			01
*	160	**WJ240400**	PORT ASSEMBLY		ポートAss'y		2	
	160a	--	CUSHION (PE)	192X10X1	クッション(PE)	(WJ24010)	4	
	160b	--	CUSHION (PE)	84X16X1	クッション(PE)	(WJ24020)	2	
	160c	--	CUSHION (PE)	218X13X2	クッション(PE)	(WJ24940)	2	
	190	--	AM CUSHION S	SMALL PORONL-24	AMクッション(小)	(WT51030)	4	
		WS616000	LOWER CASE SUB ASSEMBLY		下ケースサブAss'y			11
	L10	--	LOWER CASE BLACK		下ケース印刷品	(WS61480)		
	L20	**CB043753**	RUBBER FOOT BLACK	T1.6	ゴム脚		5	05
	L40	--	CUSHION (PE)	500X13X1	クッション(PE)	(WJ16590)	6	
	L50	--	CUSHION	205X5X5	クッション	(WJ04390)	2	
	L60	--	CUSHION (PE)	240X8X1	クッション(PE)	(WH95400)	8	

*: New Parts

RANK: Japan only

KEYBOARD ASSEMBLY

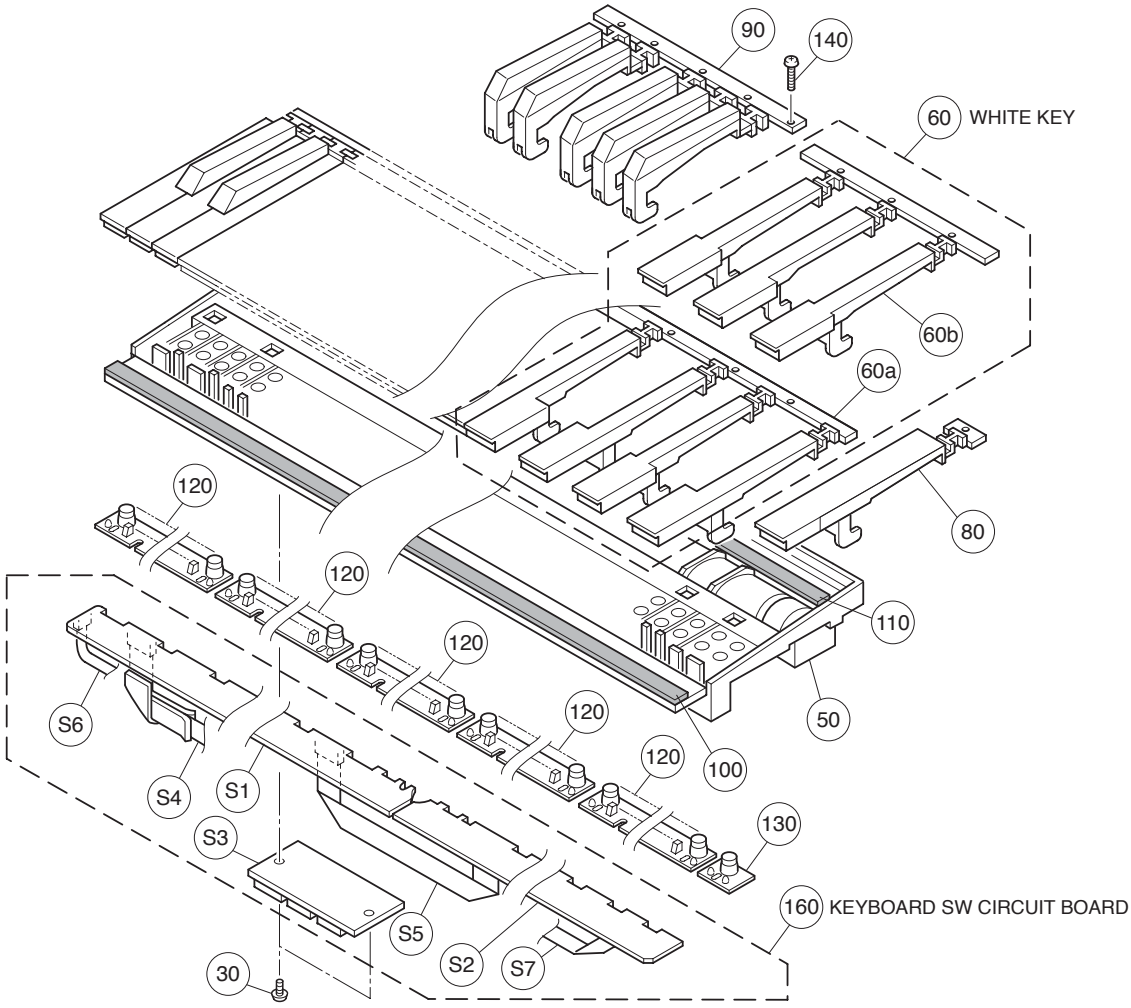

REF NO.	PART NO.	DESCRIPTION		部品名	REMARKS	QTY	RANK
		KEYBOARD ASSEMBLY		16M鍵盤EMKSA	PSR-A2000		
	WB91420R	KEYBOARD ASSEMBLY	16M C61-2M-EBUS	16M鍵盤EMKSA			18
30	**WF266600**	BIND HEAD TAPPING SCREW-P	3.0X8 MFZN2B3	Pタイト＋BIND		2	01
50	**--**	KEYBOARD FRAME	C61 16M	フレーム	(VS15380)		
50	**VU32860R**	KEYBOARD FRAME	C61 16M	フレーム			07
60	**VH1809D0**	WHITE KEY	16L CEGBDFA	白鍵CEGBDFA		5	05
60a	**VH180900**	WHITE KEY	16L CEGB	白鍵CEGB		5	
60b	**VH181000**	WHITE KEY	16L DFA	白鍵DFA		5	
80	**VH181101**	WHITE KEY	16L C'	白鍵C'			01
90	**VH18120R**	BLACK KEY	16L #	黒鍵		5	03
100	**VH181300**	FELT		フェルト			03
110	**VH181400**	RUBBER SHEET		ゴムシート			01
110	**WA52510R**	CUSHION SHEET		クッションシート			01
120	**VU328400**	RUBBER CONTACT	16M OCT 2M 12KEYS	接点ゴム		5	06
130	**VU328500**	RUBBER CONTACT	16M C' 2M 1KEY	接点ゴム			05
140	**WE973000**	BIND HEAD TAPPING SCREW-P	3.0X16 MFZN2W3	Pタイト＋BIND		21	01
140	**WE983200**	BIND HEAD TAPPING SCREW-P	3.0X16 MFZN2B3	Pタイト＋BIND		21	01
150	**TX920280**	GREASE	G-31KA 50g	グリス	(VE96850)		10
160	**--**	KEYBOARD SW CIRCUIT BOARD	16M C61 P2M EBUS	鍵盤SWシート	(WB91430)		
	--	KEYBOARD SW CIRCUIT BOARD	16M C61 P2M EBUS	鍵盤SWシート	(WB91430)		
S1	**VU648101**	CIRCUIT BOARD	MK-L	MKーLシート			08
S2	**VU648200**	CIRCUIT BOARD	MK-H	MKーHシート			09
S3	**WF310500**	CIRCUIT BOARD	EMKS61A (E-BUS)	EMKS61Aシート			08
S4	**VU95890R**	CABLE	12P	ケーブル			03
S5	**VU65950R**	CABLE	12P	ケーブル			02
S6	**VU65940R**	CABLE	7P	ケーブル			02
S7	**VU65960R**	CABLE	5P	ケーブル			02

✻: New Parts

RANK: Japan only

■ JOYSTICK

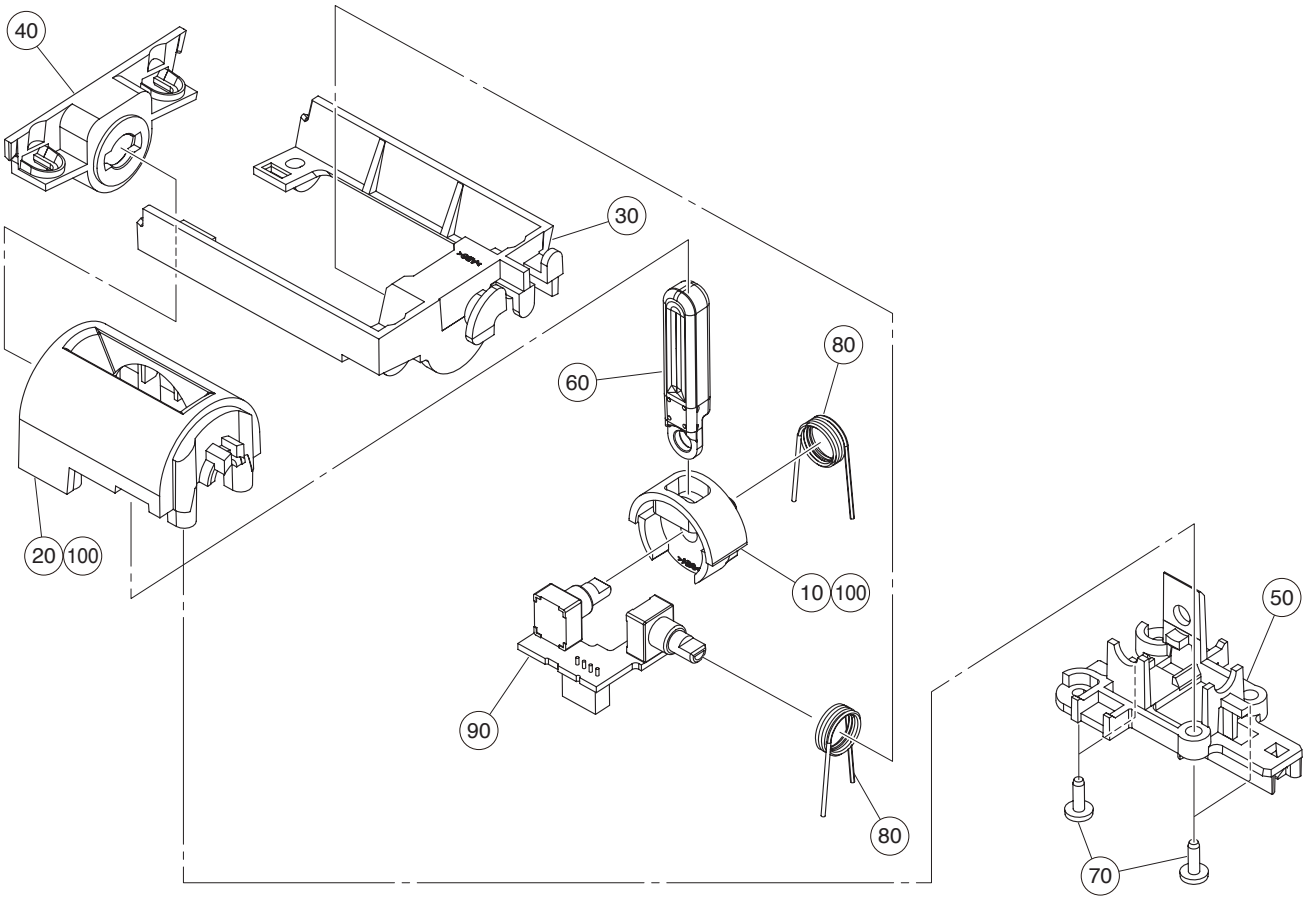

	REF NO.	PART NO.	DESCRIPTION		部品名	REMARKS	QTY	RANK
			JOYSTICK		ジョイスティック	PSR-A2000		
*		WW997300	JOYSTICK		ジョイスティック			
	10	--	X-WHEEL		Xホイール	(WY02540)		
	20	--	Y-WHEEL		Yホイール	(WY02550)		
	30	--	L-HOUSING		Lハウジング	(WY02560)		
	40	--	S-HOUSING		Sハウジング	(WY02570)		
	50	--	FRAME		フレーム	(WY02580)		
	60	--	KNOB		ノブ	(WY02590)		
	70	--	BIND HEAD TAPPING SCREW-B	3.0X14 MFZN2W3	Bタイト十BIND	(WR90130)	4	
	80	--	TORSION SPRING		ねじりコイルばね	(WY02600)	2	
	90	--	CIRCUIT BOARD	JS	JSシート	(WY02620)		
	100	--	GREASE	MOLYKOTE EM-D110	グリス	(WY02610)		

*: New Parts

RANK: Japan only

LCD ASSEMBLY

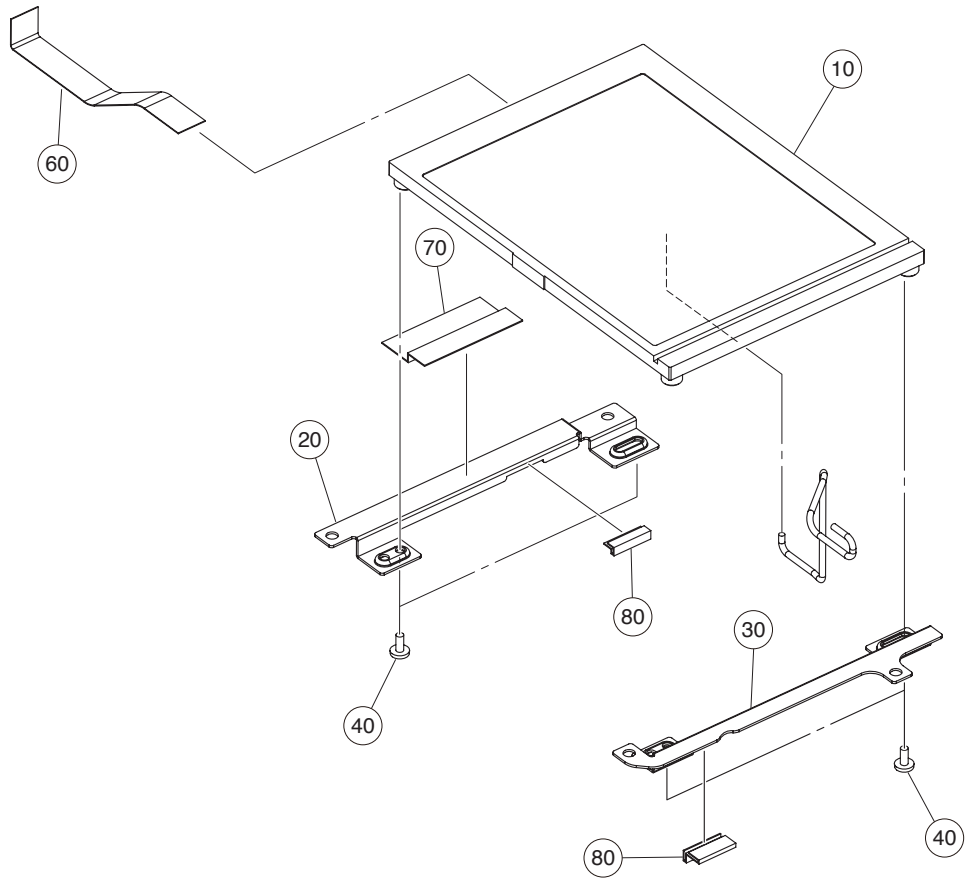

REF NO.	PART NO.	DESCRIPTION		部品名	REMARKS	QTY	RANK
		LCD ASSEMBLY		ＬＣＤ Ａｓｓ’ｙ	PSR-A2000		
	--	LCD ASSEMBLY		ＬＣＤ Ａｓｓ’ｙ	(WR35840)		
10	**WR339600**	CRYSTAL DISPLAY	KG057QVLFF-G00	液晶ディスプレイ			45
20	**WR358600**	LCD FIXTURE L	LEFT	ＬＣＤ固定金具 Ｌ			
30	**WR358700**	LCD FIXTURE R	RIGHT	ＬＣＤ固定金具 Ｒ			
40	**WE936301**	BIND HEAD TAPPING SCREW-B	3.0X6 MFZN2W3	Ｂタイト十ＢＩＮＤ		4	01
60	**WK547600**	FFC CABLE	LCD 20P 100mm P=0.50	ＦＦＣ束線			02
70	**WA530900**	EL ADHESIVE TAPE	AL-40 40mmX20m	導電性粘着テープ			18
80	**WG526801**	ADHESIVE TAPE	15X30	アセテートクロス粘着			09

✻: New Parts

RANK: Japan only

■ ELECTRICAL PARTS

AM/DJK/HP/SW/VR

	REF NO.	PART NO.	DESCRIPTION		部品名	REMARKS	QTY	RANK
			ELECTRICAL PARTS		電気部品	PSR-A2000		
*		**WW421800**	CIRCUIT BOARD	AM	AMシート	(WW42150)(YD223C0)		
*		**WW421900**	CIRCUIT BOARD	DJK	DJKシート	(WW42150)(YD223C0)		
*		**WW422200**	CIRCUIT BOARD	HP	HPシート	(WW42150)(YD223C0)		
*		**WW422000**	CIRCUIT BOARD	SW	SWシート	(WW42150)(YD223C0)		
*		**WW422100**	CIRCUIT BOARD	VR	VRシート	(WW42150)(YD223C0)		
*		**WW421400**	CIRCUIT BOARD	DML	DMLシート	(YD221C0)		
*		**WW422900**	CIRCUIT BOARD	EIF	EIFシート	(WW42170)(YD222A0)		
*		**WW422800**	CIRCUIT BOARD	ENC	ENCシート	(WW42170)(YD222A0)		
*		**WW422400**	CIRCUIT BOARD	OR	ORシート	(WW42170)(YD222A0)		
*		**WW422700**	CIRCUIT BOARD	PNCA	PNCAシート	(WW42170)(YD222A0)		
*		**WW422600**	CIRCUIT BOARD	PNCB	PNCBシート	(WW42170)(YD222A0)		
		WF310500	CIRCUIT BOARD	EMKS61A (E-BUS)	EMKS61Aシート	(WF31010)(X6637C0)		08
		--	CIRCUIT BOARD	JS	JSシート	(WY02620)(YD299A0)		
		VU648200	CIRCUIT BOARD	MK-H	MK－Hシート	(VU64800)(XR565C0)		09
		VU648101	CIRCUIT BOARD	MK-L	MK－Lシート	(VU64790)(XR564C0)		08
		WJ012900	CIRCUIT BOARD	PNL	PNLシート	(WJ01280)(X8086D0)		11
		WJ013000	CIRCUIT BOARD	PNR	PNRシート	(WJ01280)(X8086D0)		11
*		**WW421800**	CIRCUIT BOARD	AM	AMシート	(WW42150)(YD223C0)		
*		**WW421900**	CIRCUIT BOARD	DJK	DJKシート	(WW42150)(YD223C0)		
*		**WW422200**	CIRCUIT BOARD	HP	HPシート	(WW42150)(YD223C0)		
*		**WW422000**	CIRCUIT BOARD	SW	SWシート	(WW42150)(YD223C0)		
*		**WW422100**	CIRCUIT BOARD	VR	VRシート	(WW42150)(YD223C0)		
		--	DC CONNECTOR PLATE		DCジャック金具	(V748520)		
		WE936301	BIND HEAD TAPPING SCREW-B	3.0X6 MFZN2W3	Bタイト＋BIND			01
		WE774301	BIND HEAD TAPPING SCREW-B	3.0X8 MFZN2W3	Bタイト＋BIND		4	01
		WE774200	BIND HEAD TAPPING SCREW-B	3.0X10 MFZN2W3	Bタイト＋BIND		2	01
		04121250	SILICON GREASE	G-746	シリコングリス			
	C905	**UR749680**	ELECTROLYTIC CAPACITOR	6800 25.0V FORM.	ケミコン			03
	CN11	**VB39070R**	CONNECTOR	PH 11P TE	ベースポスト			01
	CN46	**VK024900**	WIRE TRAP	52147 5P TE	ワイヤートラップ			01
	CN47	**VI878300**	CABLE HOLDER	51048 5P TE	ケーブルホルダー			01
	CN51	**VL844900**	CONNECTOR	XH 5P TE	ベースツキポスト			01
	CN53	**VL844800**	CONNECTOR	XH 4P TE	ベースツキポスト			01
	CN62	**VL845000**	CONNECTOR	XH 6P TE	ベースツキポスト			01
	CN63	**VF72830R**	WIRE TRAP	52147 6P TE	ワイヤートラップ			01
	CN72	**VB390200**	CONNECTOR	PH 6P TE	ベースポスト			01
	CN73	**VB39010R**	CONNECTOR	PH 5P TE	ベースポスト			01
	CN75	**VB390500**	CONNECTOR	PH 9P TE	ベースポスト			03
	CN81	**VB39060R**	CONNECTOR	PH 10P TE	ベースポスト			01
	CN91	**VL845000**	CONNECTOR	XH 6P TE	ベースツキポスト			01
	CN94	**VI878400**	CABLE HOLDER	51048 6P TE	ケーブルホルダー			01
	CN96	**VB39000R**	CONNECTOR	PH 4P TE	ベースポスト			01
	CN97	**VL845000**	CONNECTOR	XH 6P TE	ベースツキポスト			01
	CN98	**VB390200**	CONNECTOR	PH 6P TE	ベースポスト			01
	CN99	**VB39040R**	CONNECTOR	PH 8P TE	ベースポスト			01
	CN100	**VB39040R**	CONNECTOR	PH 8P TE	ベースポスト			01
⚠	D90	**V9917100**	DIODE	S3V60-5004P15 FOR.	ダイオード			01
	HT051	**--**	HEAT SINK	25BS098H-L50	放熱板	(V776520)		
	HT053	**--**	HEAT SINK		放熱板	(WD18590)		
	IC51	**XQ619A00**	IC	LA4705NA-E	IC	POWER AMP 17W		05
	IC53	**XV771A00**	IC	BA5417	IC	POWER AMP 5.0W 2CH		03
	IC74	**WA64520R**	PHOTO COUPLER	PC900V0NSZX	フォトカプラ			04
	IC92	**XJ608A00**	IC	NJM7812FA	IC	REGULATOR +12V		02
	IC95	**X4404A01**	HYBRID IC	MPD6S004S	ハイブリットIC	DC-DC CONVERTER		09
	JK14	**VB312600**	PHONE CONNECTOR BLACK	JACK YKB21-5012	ホーンコネクタ（黒）	AUX IN R		02
	JK15	**VC68750R**	PHONE CONNECTOR BLACK	JACK YKB21-5014	ホーンコネクタ（黒）	AUX IN L/L+R		01
	JK44	**VB312600**	PHONE CONNECTOR BLACK	JACK YKB21-5012	ホーンコネクタ（黒）	OUTPUT R		02
	JK45	**VC68750R**	PHONE CONNECTOR BLACK	JACK YKB21-5014	ホーンコネクタ（黒）	OUTPUT L/L+R		01
	JK49	**LB101870**	PHONE CONNECTOR	JACK YKB21-5006	ホーンコネクタ	PHONES		03
	JK49	**WJ306200**	PHONE CONNECTOR	MSJ-064-15A B AG	ホーンコネクタ			01
	JK72	**WK450700**	USB CONNECTOR	YKF45-0033N 4P SE	USBコネクタ	USB TO DEVICE		01
	JK73	**V6802600**	USB JACK	USB 4P SE	USBジャック	USB TO HOST		02
	JK74	**VJ10720R**	DIN CONNECTOR	JACK 5P YKF51-5050N	DINコネクタ	MIDI IN		01
	JK74	**VZ085800**	DIN CONNECTOR	JACK 5P HDC-052SP-01	DINコネクタ			01
	JK75	**VJ10720R**	DIN CONNECTOR	JACK 5P YKF51-5050N	DINコネクタ	MIDI OUT		01
	JK75	**VZ085800**	DIN CONNECTOR	JACK 5P HDC-052SP-01	DINコネクタ			01
	JK81	**VS11540R**	PHONE CONNECTOR BLACK	LGR4609-7100F	ホーンコネクタ（黒）	FOOT PEDAL 1		01
	JK82	**VS11540R**	PHONE CONNECTOR BLACK	LGR4609-7100F	ホーンコネクタ（黒）	FOOT PEDAL 2		01

*: New Parts

RANK: Japan only

AM/DJK/HP/SW/VR

REF NO.	PART NO.	DESCRIPTION		部品名	REMARKS	QTY	RANK
⚠ JK90	**V7509100**	CONNECTOR	DJ-0735D_029	電源コネクタ	DC IN 16V		02
⚠ L90	**WB21490R**	LINE FILTER	PLH10AN1112R6P2B	ラインフィルター			03
RY1	**V824560R**	RELAY	DC ATX203 12V	リレー			04
RY1	**V8616500**	RELAY	DC G6S-2 12V	リレー 12V			04
RY1	**WB751900**	RELAY	DC EC2-12NU-F 12V	リレー 12V			03
⚠ SW94	**V9661700**	PUSH SWITCH	SY16-32-4(U99S2)/T	プッシュSW	STANDBY/ON		03
⚠ TH90	**VV45800R**	PROTECTOR SWITCH	RUEF250 2.50A 30V	ポリスイッチ			03
VR13	**WA994700**	ROTARY VARIABLE RESISTOR	A 10.0K XV014111	二連ロータリーVR	MASTER VOLUME		02
WH001	**--**	CONNECTOR ASSEMBLY	HP 5P	HP束線	(WR02560)		
WH003	**--**	CONNECTOR ASSEMBLY	SW 6P	SW束線	(WW99740)		
C13	**US14510R**	CERAMIC CAPACITOR (CHIP)	0.1000 25V Z RECT.	チップセラ（F）			01
C14	**US062470**	CERAMIC CAPACITOR (CHIP)	470P 50V J RECT.	チップセラ（SL）			01
C21	**US14510R**	CERAMIC CAPACITOR (CHIP)	0.1000 25V Z RECT.	チップセラ（F）			01
C22	**US14510R**	CERAMIC CAPACITOR (CHIP)	0.1000 25V Z RECT.	チップセラ（F）			01
C31	**US14510R**	CERAMIC CAPACITOR (CHIP)	0.1000 25V Z RECT.	チップセラ（F）			01
C32	**US14510R**	CERAMIC CAPACITOR (CHIP)	0.1000 25V Z RECT.	チップセラ（F）			01
C48	**US14510R**	CERAMIC CAPACITOR (CHIP)	0.1000 25V Z RECT.	チップセラ（F）			01
C50	**US14510R**	CERAMIC CAPACITOR (CHIP)	0.1000 25V Z RECT.	チップセラ（F）			01
C55	**US14510R**	CERAMIC CAPACITOR (CHIP)	0.1000 25V Z RECT.	チップセラ（F）			01
C59	**US14510R**	CERAMIC CAPACITOR (CHIP)	0.1000 25V Z RECT.	チップセラ（F）			01
C92	**US14510R**	CERAMIC CAPACITOR (CHIP)	0.1000 25V Z RECT.	チップセラ（F）			01
C93	**US14510R**	CERAMIC CAPACITOR (CHIP)	0.1000 25V Z RECT.	チップセラ（F）			01
C141	**US063100**	CERAMIC CAPACITOR (CHIP)	1000P 50V K RECT.	チップセラ（B）			01
C145	**US062100**	CERAMIC CAPACITOR (CHIP)	100P 50V J RECT.	チップセラ（SL）			01
C146	**US062470**	CERAMIC CAPACITOR (CHIP)	470P 50V J RECT.	チップセラ（SL）			01
C148	**US062220**	CERAMIC CAPACITOR (CHIP)	220P 50V J RECT.	チップセラ（SL）			01
C151	**US063100**	CERAMIC CAPACITOR (CHIP)	1000P 50V K RECT.	チップセラ（B）			01
C155	**US062100**	CERAMIC CAPACITOR (CHIP)	100P 50V J RECT.	チップセラ（SL）			01
C156	**US062470**	CERAMIC CAPACITOR (CHIP)	470P 50V J RECT.	チップセラ（SL）			01
C158	**US062220**	CERAMIC CAPACITOR (CHIP)	220P 50V J RECT.	チップセラ（SL）			01
C163	**US06168R**	CERAMIC CAPACITOR (CHIP)	68P 50V J RECT.	チップセラ（SL）			01
C167	**US063100**	CERAMIC CAPACITOR (CHIP)	1000P 50V K RECT.	チップセラ（B）			01
C168	**US14510R**	CERAMIC CAPACITOR (CHIP)	0.1000 25V Z RECT.	チップセラ（F）			01
C173	**US06168R**	CERAMIC CAPACITOR (CHIP)	68P 50V J RECT.	チップセラ（SL）			01
C177	**US063100**	CERAMIC CAPACITOR (CHIP)	1000P 50V K RECT.	チップセラ（B）			01
C178	**US14510R**	CERAMIC CAPACITOR (CHIP)	0.1000 25V Z RECT.	チップセラ（F）			01
C220	**US062470**	CERAMIC CAPACITOR (CHIP)	470P 50V J RECT.	チップセラ（SL）			01
C231	**US063100**	CERAMIC CAPACITOR (CHIP)	1000P 50V K RECT.	チップセラ（B）			01
C233	**US062100**	CERAMIC CAPACITOR (CHIP)	100P 50V J RECT.	チップセラ（SL）			01
C320	**US062470**	CERAMIC CAPACITOR (CHIP)	470P 50V J RECT.	チップセラ（SL）			01
C331	**US063100**	CERAMIC CAPACITOR (CHIP)	1000P 50V K RECT.	チップセラ（B）			01
C333	**US062100**	CERAMIC CAPACITOR (CHIP)	100P 50V J RECT.	チップセラ（SL）			01
C414	**US06322R**	CERAMIC CAPACITOR (CHIP)	2200P 50V K RECT.	チップセラ（B）			01
C416	**US062470**	CERAMIC CAPACITOR (CHIP)	470P 50V J RECT.	チップセラ（SL）			01
C424	**US06322R**	CERAMIC CAPACITOR (CHIP)	2200P 50V K RECT.	チップセラ（B）			01
C426	**US062470**	CERAMIC CAPACITOR (CHIP)	470P 50V J RECT.	チップセラ（SL）			01
C431	**US14510R**	CERAMIC CAPACITOR (CHIP)	0.1000 25V Z RECT.	チップセラ（F）			01
C442	**US063100**	CERAMIC CAPACITOR (CHIP)	1000P 50V K RECT.	チップセラ（B）			01
C445	**US06168R**	CERAMIC CAPACITOR (CHIP)	68P 50V J RECT.	チップセラ（SL）			01
C447	**US063100**	CERAMIC CAPACITOR (CHIP)	1000P 50V K RECT.	チップセラ（B）			01
C452	**US063100**	CERAMIC CAPACITOR (CHIP)	1000P 50V K RECT.	チップセラ（B）			01
C455	**US06168R**	CERAMIC CAPACITOR (CHIP)	68P 50V J RECT.	チップセラ（SL）			01
C457	**US063100**	CERAMIC CAPACITOR (CHIP)	1000P 50V K RECT.	チップセラ（B）			01
C471	**US06322R**	CERAMIC CAPACITOR (CHIP)	2200P 50V K RECT.	チップセラ（B）			01
C481	**US06322R**	CERAMIC CAPACITOR (CHIP)	2200P 50V K RECT.	チップセラ（B）			01
C502	**US14510R**	CERAMIC CAPACITOR (CHIP)	0.1000 25V Z RECT.	チップセラ（F）			01
C506	**US14510R**	CERAMIC CAPACITOR (CHIP)	0.1000 25V Z RECT.	チップセラ（F）			01
C515	**US062470**	CERAMIC CAPACITOR (CHIP)	470P 50V J RECT.	チップセラ（SL）			01
C525	**US062470**	CERAMIC CAPACITOR (CHIP)	470P 50V J RECT.	チップセラ（SL）			01
C535	**US062470**	CERAMIC CAPACITOR (CHIP)	470P 50V J RECT.	チップセラ（SL）			01
C545	**US062470**	CERAMIC CAPACITOR (CHIP)	470P 50V J RECT.	チップセラ（SL）			01
C553	**US14510R**	CERAMIC CAPACITOR (CHIP)	0.1000 25V Z RECT.	チップセラ（F）			01
C721	**US14510R**	CERAMIC CAPACITOR (CHIP)	0.1000 25V Z RECT.	チップセラ（F）			01
C722	**US061220**	CERAMIC CAPACITOR (CHIP)	22P 50V J RECT.	チップセラ（CH）			01
C723	**US061220**	CERAMIC CAPACITOR (CHIP)	22P 50V J RECT.	チップセラ（CH）			01
C731	**US14510R**	CERAMIC CAPACITOR (CHIP)	0.1000 25V Z RECT.	チップセラ（F）			01
C741	**US064100**	CERAMIC CAPACITOR (CHIP)	0.0100 50V K RECT.	チップセラ（B）			01
C742	**US064100**	CERAMIC CAPACITOR (CHIP)	0.0100 50V K RECT.	チップセラ（B）			01
C812	**US064100**	CERAMIC CAPACITOR (CHIP)	0.0100 50V K RECT.	チップセラ（B）			01
C814	**US062100**	CERAMIC CAPACITOR (CHIP)	100P 50V J RECT.	チップセラ（SL）			01

✻: New Parts

RANK: Japan only

AM/DJK/HP/SW/VR

REF NO.	PART NO.	DESCRIPTION		部品名	REMARKS	QTY	RANK
C822	**US064100**	CERAMIC CAPACITOR (CHIP)	0.0100 50V K RECT.	チップセラ（B）			01
C824	**US062100**	CERAMIC CAPACITOR (CHIP)	100P 50V J RECT.	チップセラ（SL）			01
C901	**US14510R**	CERAMIC CAPACITOR (CHIP)	0.1000 25V Z RECT.	チップセラ（F）			01
-904	**US14510R**	CERAMIC CAPACITOR (CHIP)	0.1000 25V Z RECT.	チップセラ（F）			01
C906	**US14510R**	CERAMIC CAPACITOR (CHIP)	0.1000 25V Z RECT.	チップセラ（F）			01
C921	**US14510R**	CERAMIC CAPACITOR (CHIP)	0.1000 25V Z RECT.	チップセラ（F）			01
C931	**US14510R**	CERAMIC CAPACITOR (CHIP)	0.1000 25V Z RECT.	チップセラ（F）			01
C935	**US14510R**	CERAMIC CAPACITOR (CHIP)	0.1000 25V Z RECT.	チップセラ（F）			01
-938	**US14510R**	CERAMIC CAPACITOR (CHIP)	0.1000 25V Z RECT.	チップセラ（F）			01
C951	**US14510R**	CERAMIC CAPACITOR (CHIP)	0.1000 25V Z RECT.	チップセラ（F）			01
C952	**US14510R**	CERAMIC CAPACITOR (CHIP)	0.1000 25V Z RECT.	チップセラ（F）			01
C961	**V5333500**	CERAMIC CAPACITOR (CHIP)	10.0 6.3V K RECT.	チップセラ（B）			01
C962	**US14510R**	CERAMIC CAPACITOR (CHIP)	0.1000 25V Z RECT.	チップセラ（F）			01
C971	**V5333500**	CERAMIC CAPACITOR (CHIP)	10.0 6.3V K RECT.	チップセラ（B）			01
C972	**US14510R**	CERAMIC CAPACITOR (CHIP)	0.1000 25V Z RECT.	チップセラ（F）			01
C982	**US14510R**	CERAMIC CAPACITOR (CHIP)	0.1000 25V Z RECT.	チップセラ（F）			01
-984	**US14510R**	CERAMIC CAPACITOR (CHIP)	0.1000 25V Z RECT.	チップセラ（F）			01
C987	**US14510R**	CERAMIC CAPACITOR (CHIP)	0.1000 25V Z RECT.	チップセラ（F）			01
C988	**US14510R**	CERAMIC CAPACITOR (CHIP)	0.1000 25V Z RECT.	チップセラ（F）			01
C990	**US14510R**	CERAMIC CAPACITOR (CHIP)	0.1000 25V Z RECT.	チップセラ（F）			01
C991	**US062100**	CERAMIC CAPACITOR (CHIP)	100P 50V J RECT.	チップセラ（SL）			01
-996	**US062100**	CERAMIC CAPACITOR (CHIP)	100P 50V J RECT.	チップセラ（SL）			01
C999	**US062100**	CERAMIC CAPACITOR (CHIP)	100P 50V J RECT.	チップセラ（SL）			01
C1000	**US062100**	CERAMIC CAPACITOR (CHIP)	100P 50V J RECT.	チップセラ（SL）			01
C1003	**US063100**	CERAMIC CAPACITOR (CHIP)	1000P 50V K RECT.	チップセラ（B）			01
C1004	**US063100**	CERAMIC CAPACITOR (CHIP)	1000P 50V K RECT.	チップセラ（B）			01
C1005	**US062100**	CERAMIC CAPACITOR (CHIP)	100P 50V J RECT.	チップセラ（SL）			01
C1006	**US062100**	CERAMIC CAPACITOR (CHIP)	100P 50V J RECT.	チップセラ（SL）			01
C1010	**US06256R**	CERAMIC CAPACITOR (CHIP)	560P 50V J RECT.	チップセラ（SL）			01
C1011	**US06256R**	CERAMIC CAPACITOR (CHIP)	560P 50V J RECT.	チップセラ（SL）			01
C2005	**US063470**	CERAMIC CAPACITOR (CHIP)	4700P 50V K RECT.	チップセラ（B）			01
D40	**V959920R**	DIODE	HSU119 TRF-E	チップダイオード			01
D40	**VT332900**	DIODE	1SS355 TE-17 TP	ダイオード			01
D40	**WG139300**	DIODE	KDS4148U-RTK/P TE	ダイオード			
D59	**V959920R**	DIODE	HSU119 TRF-E	チップダイオード			01
D59	**VT332900**	DIODE	1SS355 TE-17 TP	ダイオード			01
D59	**WG139300**	DIODE	KDS4148U-RTK/P TE	ダイオード			
D74	**V959920R**	DIODE	HSU119 TRF-E	チップダイオード			01
D74	**VT332900**	DIODE	1SS355 TE-17 TP	ダイオード			01
D74	**WG139300**	DIODE	KDS4148U-RTK/P TE	ダイオード			
D92	**V959920R**	DIODE	HSU119 TRF-E	チップダイオード			01
D92	**VT332900**	DIODE	1SS355 TE-17 TP	ダイオード			01
D92	**WG139300**	DIODE	KDS4148U-RTK/P TE	ダイオード			
D811	**V959920R**	DIODE	HSU119 TRF-E	チップダイオード			01
D811	**VT332900**	DIODE	1SS355 TE-17 TP	ダイオード			01
D811	**WG139300**	DIODE	KDS4148U-RTK/P TE	ダイオード			
D812	**V959920R**	DIODE	HSU119 TRF-E	チップダイオード			01
D812	**VT332900**	DIODE	1SS355 TE-17 TP	ダイオード			01
D812	**WG139300**	DIODE	KDS4148U-RTK/P TE	ダイオード			
D821	**V959920R**	DIODE	HSU119 TRF-E	チップダイオード			01
D821	**VT332900**	DIODE	1SS355 TE-17 TP	ダイオード			01
D821	**WG139300**	DIODE	KDS4148U-RTK/P TE	ダイオード			
D822	**V959920R**	DIODE	HSU119 TRF-E	チップダイオード			01
D822	**VT332900**	DIODE	1SS355 TE-17 TP	ダイオード			01
D822	**WG139300**	DIODE	KDS4148U-RTK/P TE	ダイオード			
IC13	**X5482A00**	IC	NE5532DR	IC	OP AMP		01
IC21	**X7391A00**	IC	UPC4574G2-E1-A	IC	OP AMP		02
IC22	**X7391A00**	IC	UPC4574G2-E1-A	IC	OP AMP		02
IC31	**X7391A00**	IC	UPC4574G2-E1-A	IC	OP AMP		02
IC32	**X7391A00**	IC	UPC4574G2-E1-A	IC	OP AMP		02
IC43	**X7391A00**	IC	UPC4574G2-E1-A	IC	OP AMP		02
IC48	**X5049A0R**	IC	NJM4556AM-TE1	IC	OP AMP		02
IC50	**X5482A00**	IC	NE5532DR	IC	OP AMP		01
IC55	**X5482A00**	IC	NE5532DR	IC	OP AMP		01
IC93	**X5482A00**	IC	NE5532DR	IC	OP AMP		01
L141	**VY65720R**	CHIP INDUCTANCE	600 BK1608HM601-T	チップインダクタ			01
L142	**VY65720R**	CHIP INDUCTANCE	600 BK1608HM601-T	チップインダクタ			01
L151	**VY65720R**	CHIP INDUCTANCE	600 BK1608HM601-T	チップインダクタ			01
L152	**VY65720R**	CHIP INDUCTANCE	600 BK1608HM601-T	チップインダクタ			01
L231	**VY65720R**	CHIP INDUCTANCE	600 BK1608HM601-T	チップインダクタ			01

✻: New Parts

RANK: Japan only

AM/DJK/HP/SW/VR

REF NO.	PART NO.	DESCRIPTION		部品名	REMARKS	QTY	RANK
L331	**VY65720R**	CHIP INDUCTANCE	600 BK1608HM601-T	チップインダクタ			01
L411	**VY65720R**	CHIP INDUCTANCE	600 BK1608HM601-T	チップインダクタ			01
L412	**VY65720R**	CHIP INDUCTANCE	600 BK1608HM601-T	チップインダクタ			01
L421	**VY65720R**	CHIP INDUCTANCE	600 BK1608HM601-T	チップインダクタ			01
L422	**VY65720R**	CHIP INDUCTANCE	600 BK1608HM601-T	チップインダクタ			01
L721	**RD250000**	CARBON RESISTOR (CHIP)	0.0 0.0 J RECT.	チップ抵抗			01
L731	**VU95400R**	CHIP SOLID INDUCTANCE	BLM21PG300SN1D	チップソリッドインダクタ			01
L741	**VQ72490R**	CHIP INDUCTANCE	BK212 5HM601-T	チップインダクタ	}		01
L741	**VY944700**	CHIP INDUCTANCE	BLM21BD601SN1D	チップインダクタ	}		01
L742	**VQ72490R**	CHIP INDUCTANCE	BK212 5HM601-T	チップインダクタ	}		01
L742	**VY944700**	CHIP INDUCTANCE	BLM21BD601SN1D	チップインダクタ	}		01
L751	**VQ72490R**	CHIP INDUCTANCE	BK212 5HM601-T	チップインダクタ	}		01
L751	**VY944700**	CHIP INDUCTANCE	BLM21BD601SN1D	チップインダクタ	}		01
L752	**VQ72490R**	CHIP INDUCTANCE	BK212 5HM601-T	チップインダクタ	}		01
L752	**VY944700**	CHIP INDUCTANCE	BLM21BD601SN1D	チップインダクタ	}		01
L811	**VQ72490R**	CHIP INDUCTANCE	BK212 5HM601-T	チップインダクタ	}		01
-813	**VQ72490R**	CHIP INDUCTANCE	BK212 5HM601-T	チップインダクタ	}		01
L811	**VY944700**	CHIP INDUCTANCE	BLM21BD601SN1D	チップインダクタ	}		01
-813	**VY944700**	CHIP INDUCTANCE	BLM21BD601SN1D	チップインダクタ	}		01
L821	**VQ72490R**	CHIP INDUCTANCE	BK212 5HM601-T	チップインダクタ	}		01
-823	**VQ72490R**	CHIP INDUCTANCE	BK212 5HM601-T	チップインダクタ	}		01
L821	**VY944700**	CHIP INDUCTANCE	BLM21BD601SN1D	チップインダクタ	}		01
-823	**VY944700**	CHIP INDUCTANCE	BLM21BD601SN1D	チップインダクタ	}		01
L836	**V523910R**	COMMON MODE COIL	DLP31SN121ML2L	コモンモードコイル			03
L931	**VY65720R**	CHIP INDUCTANCE	600 BK1608HM601-T	チップインダクタ			01
L932	**VY65720R**	CHIP INDUCTANCE	600 BK1608HM601-T	チップインダクタ			01
R18	**RD357100**	CARBON RESISTOR (CHIP)	10.0K 63M J RECT.	チップ抵抗			01
R19	**RD356100**	CARBON RESISTOR (CHIP)	1.0K 63M J RECT.	チップ抵抗			01
R44	**RD356470**	CARBON RESISTOR (CHIP)	4.7K 63M J RECT.	チップ抵抗			01
R45	**RD356470**	CARBON RESISTOR (CHIP)	4.7K 63M J RECT.	チップ抵抗			01
R142	**RD357100**	CARBON RESISTOR (CHIP)	10.0K 63M J RECT.	チップ抵抗			01
R143	**RD35747R**	CARBON RESISTOR (CHIP)	47.0K 63M J RECT.	チップ抵抗			01
R144	**RD357100**	CARBON RESISTOR (CHIP)	10.0K 63M J RECT.	チップ抵抗			01
R145	**RD357100**	CARBON RESISTOR (CHIP)	10.0K 63M J RECT.	チップ抵抗			01
R146	**RD350001**	CARBON RESISTOR (CHIP)	0 63M J RECT.	チップ抵抗			01
R147	**RD356470**	CARBON RESISTOR (CHIP)	4.7K 63M J RECT.	チップ抵抗			01
R148	**RD356470**	CARBON RESISTOR (CHIP)	4.7K 63M J RECT.	チップ抵抗			01
R149	**RD354470**	CARBON RESISTOR (CHIP)	47.0 63M J RECT.	チップ抵抗			01
R152	**RD357100**	CARBON RESISTOR (CHIP)	10.0K 63M J RECT.	チップ抵抗			01
R153	**RD35747R**	CARBON RESISTOR (CHIP)	47.0K 63M J RECT.	チップ抵抗			01
R154	**RD357100**	CARBON RESISTOR (CHIP)	10.0K 63M J RECT.	チップ抵抗			01
R155	**RD357100**	CARBON RESISTOR (CHIP)	10.0K 63M J RECT.	チップ抵抗			01
R156	**RD350001**	CARBON RESISTOR (CHIP)	0 63M J RECT.	チップ抵抗			01
R157	**RD356470**	CARBON RESISTOR (CHIP)	4.7K 63M J RECT.	チップ抵抗			01
R158	**RD356470**	CARBON RESISTOR (CHIP)	4.7K 63M J RECT.	チップ抵抗			01
R159	**RD354470**	CARBON RESISTOR (CHIP)	47.0 63M J RECT.	チップ抵抗			01
R163	**RD356470**	CARBON RESISTOR (CHIP)	4.7K 63M J RECT.	チップ抵抗			01
-166	**RD356470**	CARBON RESISTOR (CHIP)	4.7K 63M J RECT.	チップ抵抗			01
R173	**RD356470**	CARBON RESISTOR (CHIP)	4.7K 63M J RECT.	チップ抵抗			01
-176	**RD356470**	CARBON RESISTOR (CHIP)	4.7K 63M J RECT.	チップ抵抗			01
R201	**RD357220**	CARBON RESISTOR (CHIP)	22.0K 63M J RECT.	チップ抵抗			01
R202	**RD355470**	CARBON RESISTOR (CHIP)	470.0 63M J RECT.	チップ抵抗			01
R203	**RD356120**	CARBON RESISTOR (CHIP)	1.2K 63M J RECT.	チップ抵抗			01
R204	**RD35718R**	CARBON RESISTOR (CHIP)	18.0K 63M J RECT.	チップ抵抗			01
R205	**RD356150**	CARBON RESISTOR (CHIP)	1.5K 63M J RECT.	チップ抵抗			01
R206	**RD357150**	CARBON RESISTOR (CHIP)	15.0K 63M J RECT.	チップ抵抗			01
R207	**RD35627R**	CARBON RESISTOR (CHIP)	2.7K 63M J RECT.	チップ抵抗			01
R208	**RD35718R**	CARBON RESISTOR (CHIP)	18.0K 63M J RECT.	チップ抵抗			01
R209	**RD35718R**	CARBON RESISTOR (CHIP)	18.0K 63M J RECT.	チップ抵抗			01
R210	**RD355680**	CARBON RESISTOR (CHIP)	680.0 63M J RECT.	チップ抵抗			01
R211	**RD356470**	CARBON RESISTOR (CHIP)	4.7K 63M J RECT.	チップ抵抗			01
R213	**RD35747R**	CARBON RESISTOR (CHIP)	47.0K 63M J RECT.	チップ抵抗			01
-217	**RD35747R**	CARBON RESISTOR (CHIP)	47.0K 63M J RECT.	チップ抵抗			01
R220	**RD356330**	CARBON RESISTOR (CHIP)	3.3K 63M J RECT.	チップ抵抗			01
R221	**RD355100**	CARBON RESISTOR (CHIP)	100.0 63M J RECT.	チップ抵抗			01
R223	**RD355560**	CARBON RESISTOR (CHIP)	560.0 63M J RECT.	チップ抵抗			01
-227	**RD355560**	CARBON RESISTOR (CHIP)	560.0 63M J RECT.	チップ抵抗			01
R231	**RD356100**	CARBON RESISTOR (CHIP)	1.0K 63M J RECT.	チップ抵抗			01
R232	**RD358100**	CARBON RESISTOR (CHIP)	100.0K 63M J RECT.	チップ抵抗			01
R233	**RD354470**	CARBON RESISTOR (CHIP)	47.0 63M J RECT.	チップ抵抗			01

✻: New Parts

RANK: Japan only

AM/DJK/HP/SW/VR

REF NO.	PART NO.	DESCRIPTION		部品名	REMARKS	QTY	RANK
R301	**RD357220**	CARBON RESISTOR (CHIP)	22.0K 63M J RECT.	チップ抵抗			01
R302	**RD355470**	CARBON RESISTOR (CHIP)	470.0 63M J RECT.	チップ抵抗			01
R303	**RD356120**	CARBON RESISTOR (CHIP)	1.2K 63M J RECT.	チップ抵抗			01
R304	**RD35718R**	CARBON RESISTOR (CHIP)	18.0K 63M J RECT.	チップ抵抗			01
R305	**RD356150**	CARBON RESISTOR (CHIP)	1.5K 63M J RECT.	チップ抵抗			01
R306	**RD357150**	CARBON RESISTOR (CHIP)	15.0K 63M J RECT.	チップ抵抗			01
R307	**RD35627R**	CARBON RESISTOR (CHIP)	2.7K 63M J RECT.	チップ抵抗			01
R308	**RD35718R**	CARBON RESISTOR (CHIP)	18.0K 63M J RECT.	チップ抵抗			01
R309	**RD35718R**	CARBON RESISTOR (CHIP)	18.0K 63M J RECT.	チップ抵抗			01
R310	**RD355680**	CARBON RESISTOR (CHIP)	680.0 63M J RECT.	チップ抵抗			01
R311	**RD356470**	CARBON RESISTOR (CHIP)	4.7K 63M J RECT.	チップ抵抗			01
R313	**RD35747R**	CARBON RESISTOR (CHIP)	47.0K 63M J RECT.	チップ抵抗			01
-317	**RD35747R**	CARBON RESISTOR (CHIP)	47.0K 63M J RECT.	チップ抵抗			01
R320	**RD356330**	CARBON RESISTOR (CHIP)	3.3K 63M J RECT.	チップ抵抗			01
R321	**RD355100**	CARBON RESISTOR (CHIP)	100.0 63M J RECT.	チップ抵抗			01
R323	**RD355560**	CARBON RESISTOR (CHIP)	560.0 63M J RECT.	チップ抵抗			01
-327	**RD355560**	CARBON RESISTOR (CHIP)	560.0 63M J RECT.	チップ抵抗			01
R331	**RD356100**	CARBON RESISTOR (CHIP)	1.0K 63M J RECT.	チップ抵抗			01
R332	**RD358100**	CARBON RESISTOR (CHIP)	100.0K 63M J RECT.	チップ抵抗			01
R333	**RD354470**	CARBON RESISTOR (CHIP)	47.0 63M J RECT.	チップ抵抗			01
R401	**RD357100**	CARBON RESISTOR (CHIP)	10.0K 63M J RECT.	チップ抵抗			01
R403	**RD356820**	CARBON RESISTOR (CHIP)	8.2K 63M J RECT.	チップ抵抗			01
R404	**RD357100**	CARBON RESISTOR (CHIP)	10.0K 63M J RECT.	チップ抵抗			01
R405	**RD357220**	CARBON RESISTOR (CHIP)	22.0K 63M J RECT.	チップ抵抗			01
R406	**RD357100**	CARBON RESISTOR (CHIP)	10.0K 63M J RECT.	チップ抵抗			01
R407	**RD357100**	CARBON RESISTOR (CHIP)	10.0K 63M J RECT.	チップ抵抗			01
R408	**RD356100**	CARBON RESISTOR (CHIP)	1.0K 63M J RECT.	チップ抵抗			01
R414	**RD357100**	CARBON RESISTOR (CHIP)	10.0K 63M J RECT.	チップ抵抗			01
R415	**RD356470**	CARBON RESISTOR (CHIP)	4.7K 63M J RECT.	チップ抵抗			01
R416	**RD357120**	CARBON RESISTOR (CHIP)	12.0K 63M J RECT.	チップ抵抗			01
R417	**RD356180**	CARBON RESISTOR (CHIP)	1.8K 63M J RECT.	チップ抵抗			01
R418	**RD356100**	CARBON RESISTOR (CHIP)	1.0K 63M J RECT.	チップ抵抗			01
R419	**RD15433R**	CARBON RESISTOR (CHIP)	33.0 1/4 J TP	チップ抵抗			01
R424	**RD357100**	CARBON RESISTOR (CHIP)	10.0K 63M J RECT.	チップ抵抗			01
R425	**RD356470**	CARBON RESISTOR (CHIP)	4.7K 63M J RECT.	チップ抵抗			01
R426	**RD357120**	CARBON RESISTOR (CHIP)	12.0K 63M J RECT.	チップ抵抗			01
R427	**RD356180**	CARBON RESISTOR (CHIP)	1.8K 63M J RECT.	チップ抵抗			01
R428	**RD356100**	CARBON RESISTOR (CHIP)	1.0K 63M J RECT.	チップ抵抗			01
R429	**RD15433R**	CARBON RESISTOR (CHIP)	33.0 1/4 J TP	チップ抵抗			01
R441	**RD356470**	CARBON RESISTOR (CHIP)	4.7K 63M J RECT.	チップ抵抗			01
-443	**RD356470**	CARBON RESISTOR (CHIP)	4.7K 63M J RECT.	チップ抵抗			01
R444	**RD354470**	CARBON RESISTOR (CHIP)	47.0 63M J RECT.	チップ抵抗			01
R445	**RD357270**	CARBON RESISTOR (CHIP)	27.0K 63M J RECT.	チップ抵抗			01
R446	**RD357100**	CARBON RESISTOR (CHIP)	10.0K 63M J RECT.	チップ抵抗			01
R447	**RD355680**	CARBON RESISTOR (CHIP)	680.0 63M J RECT.	チップ抵抗			01
R451	**RD356470**	CARBON RESISTOR (CHIP)	4.7K 63M J RECT.	チップ抵抗			01
-453	**RD356470**	CARBON RESISTOR (CHIP)	4.7K 63M J RECT.	チップ抵抗			01
R454	**RD354470**	CARBON RESISTOR (CHIP)	47.0 63M J RECT.	チップ抵抗			01
R455	**RD357270**	CARBON RESISTOR (CHIP)	27.0K 63M J RECT.	チップ抵抗			01
R456	**RD357100**	CARBON RESISTOR (CHIP)	10.0K 63M J RECT.	チップ抵抗			01
R457	**RD355680**	CARBON RESISTOR (CHIP)	680.0 63M J RECT.	チップ抵抗			01
R502	**RD350001**	CARBON RESISTOR (CHIP)	0 63M J RECT.	チップ抵抗			01
R510	**RD357100**	CARBON RESISTOR (CHIP)	10.0K 63M J RECT.	チップ抵抗			01
R511	**RD356560**	CARBON RESISTOR (CHIP)	5.6K 63M J RECT.	チップ抵抗			01
R512	**RD356560**	CARBON RESISTOR (CHIP)	5.6K 63M J RECT.	チップ抵抗			01
R513	**RD356220**	CARBON RESISTOR (CHIP)	2.2K 63M J RECT.	チップ抵抗			01
R514	**RD355330**	CARBON RESISTOR (CHIP)	330.0 63M J RECT.	チップ抵抗			01
R515	**RD356220**	CARBON RESISTOR (CHIP)	2.2K 63M J RECT.	チップ抵抗			01
R521	**RD356560**	CARBON RESISTOR (CHIP)	5.6K 63M J RECT.	チップ抵抗			01
R522	**RD356560**	CARBON RESISTOR (CHIP)	5.6K 63M J RECT.	チップ抵抗			01
R523	**RD356220**	CARBON RESISTOR (CHIP)	2.2K 63M J RECT.	チップ抵抗			01
R524	**RD355330**	CARBON RESISTOR (CHIP)	330.0 63M J RECT.	チップ抵抗			01
R525	**RD356220**	CARBON RESISTOR (CHIP)	2.2K 63M J RECT.	チップ抵抗			01
R531	**RD356470**	CARBON RESISTOR (CHIP)	4.7K 63M J RECT.	チップ抵抗			01
R532	**RD357100**	CARBON RESISTOR (CHIP)	10.0K 63M J RECT.	チップ抵抗			01
R533	**RD356180**	CARBON RESISTOR (CHIP)	1.8K 63M J RECT.	チップ抵抗			01
R534	**RD355470**	CARBON RESISTOR (CHIP)	470.0 63M J RECT.	チップ抵抗			01
R535	**RD355470**	CARBON RESISTOR (CHIP)	470.0 63M J RECT.	チップ抵抗			01
R537	**RD356100**	CARBON RESISTOR (CHIP)	1.0K 63M J RECT.	チップ抵抗			01
R541	**RD356470**	CARBON RESISTOR (CHIP)	4.7K 63M J RECT.	チップ抵抗			01

✻: New Parts

RANK: Japan only

AM/DJK/HP/SW/VR

REF NO.	PART NO.	DESCRIPTION		部品名	REMARKS	QTY	RANK
R542	**RD357100**	CARBON RESISTOR (CHIP)	10.0K 63M J RECT.	チップ抵抗			01
R543	**RD356180**	CARBON RESISTOR (CHIP)	1.8K 63M J RECT.	チップ抵抗			01
R544	**RD355470**	CARBON RESISTOR (CHIP)	470.0 63M J RECT.	チップ抵抗			01
R545	**RD355470**	CARBON RESISTOR (CHIP)	470.0 63M J RECT.	チップ抵抗			01
R547	**RD356100**	CARBON RESISTOR (CHIP)	1.0K 63M J RECT.	チップ抵抗			01
R556	**RD356220**	CARBON RESISTOR (CHIP)	2.2K 63M J RECT.	チップ抵抗			01
R591	**RD357220**	CARBON RESISTOR (CHIP)	22.0K 63M J RECT.	チップ抵抗			01
R592	**RD356150**	CARBON RESISTOR (CHIP)	1.5K 63M J RECT.	チップ抵抗			01
R593	**RD356470**	CARBON RESISTOR (CHIP)	4.7K 63M J RECT.	チップ抵抗			01
R594	**RD356820**	CARBON RESISTOR (CHIP)	8.2K 63M J RECT.	チップ抵抗			01
R595	**RD358100**	CARBON RESISTOR (CHIP)	100.0K 63M J RECT.	チップ抵抗			01
R741	**RD355220**	CARBON RESISTOR (CHIP)	220.0 63M J RECT.	チップ抵抗			01
R742	**RD356100**	CARBON RESISTOR (CHIP)	1.0K 63M J RECT.	チップ抵抗			01
R751	**RD355220**	CARBON RESISTOR (CHIP)	220.0 63M J RECT.	チップ抵抗			01
R752	**RD355220**	CARBON RESISTOR (CHIP)	220.0 63M J RECT.	チップ抵抗			01
R753	**RD356150**	CARBON RESISTOR (CHIP)	1.5K 63M J RECT.	チップ抵抗			01
R754	**RD357100**	CARBON RESISTOR (CHIP)	10.0K 63M J RECT.	チップ抵抗			01
R755	**RD357220**	CARBON RESISTOR (CHIP)	22.0K 63M J RECT.	チップ抵抗			01
R756	**RD357220**	CARBON RESISTOR (CHIP)	22.0K 63M J RECT.	チップ抵抗			01
R757	**RD250000**	CARBON RESISTOR (CHIP)	0.0 0.0 J RECT.	チップ抵抗			01
R758	**RD250000**	CARBON RESISTOR (CHIP)	0.0 0.0 J RECT.	チップ抵抗			01
R812	**RD356100**	CARBON RESISTOR (CHIP)	1.0K 63M J RECT.	チップ抵抗			01
R813	**RD355220**	CARBON RESISTOR (CHIP)	220.0 63M J RECT.	チップ抵抗			01
R814	**RD357100**	CARBON RESISTOR (CHIP)	10.0K 63M J RECT.	チップ抵抗			01
R822	**RD356100**	CARBON RESISTOR (CHIP)	1.0K 63M J RECT.	チップ抵抗			01
R823	**RD355220**	CARBON RESISTOR (CHIP)	220.0 63M J RECT.	チップ抵抗			01
R824	**RD357100**	CARBON RESISTOR (CHIP)	10.0K 63M J RECT.	チップ抵抗			01
R835	**RD250000**	CARBON RESISTOR (CHIP)	0.0 0.0 J RECT.	チップ抵抗			01
R839	**RD250000**	CARBON RESISTOR (CHIP)	0.0 0.0 J RECT.	チップ抵抗			01
R841	**RD250000**	CARBON RESISTOR (CHIP)	0.0 0.0 J RECT.	チップ抵抗			01
R931	**RD356470**	CARBON RESISTOR (CHIP)	4.7K 63M J RECT.	チップ抵抗			01
R932	**RD356470**	CARBON RESISTOR (CHIP)	4.7K 63M J RECT.	チップ抵抗			01
R933	**RD350001**	CARBON RESISTOR (CHIP)	0 63M J RECT.	チップ抵抗			01
R934	**RD350001**	CARBON RESISTOR (CHIP)	0 63M J RECT.	チップ抵抗			01
R936	**RD350001**	CARBON RESISTOR (CHIP)	0 63M J RECT.	チップ抵抗			01
R937	**RD350001**	CARBON RESISTOR (CHIP)	0 63M J RECT.	チップ抵抗			01
R939	**RD355100**	CARBON RESISTOR (CHIP)	100.0 63M J RECT.	チップ抵抗			01
R940	**RD355100**	CARBON RESISTOR (CHIP)	100.0 63M J RECT.	チップ抵抗			01
TR18	**VV556500**	TRANSISTOR	2SA1037AK Q,R,S TP	トランジスタ 2SA			01
TR41	**VJ92710R**	TRANSISTOR	2SC2712-Y(TE85R,F)	トランジスタ 2SC			01
TR41	**VV556400**	TRANSISTOR	2SC2412K Q,R,S TP	トランジスタ			01
TR42	**VJ92710R**	TRANSISTOR	2SC2712-Y(TE85R,F)	トランジスタ 2SC			01
TR42	**VV556400**	TRANSISTOR	2SC2412K Q,R,S TP	トランジスタ			01
TR44	**VD303700**	TRANSISTOR	2SC3326 -A,B(TE85R)	トランジスタ 2SC			01
-47	**VD303700**	TRANSISTOR	2SC3326 -A,B(TE85R)	トランジスタ 2SC			01
TR59	**VV556500**	TRANSISTOR	2SA1037AK Q,R,S TP	トランジスタ 2SA			01
TR75	**VJ92710R**	TRANSISTOR	2SC2712-Y(TE85R,F)	トランジスタ 2SC			01
TR75	**VV556400**	TRANSISTOR	2SC2412K Q,R,S TP	トランジスタ			01
TR76	**VJ92710R**	TRANSISTOR	2SC2712-Y(TE85R,F)	トランジスタ 2SC			01
TR76	**VV556400**	TRANSISTOR	2SC2412K Q,R,S TP	トランジスタ			01
C75	**UR837470**	ELECTROLYTIC CAPACITOR	47.00 16.0V RX TP	ケミコン			01
C75	**UR847470**	ELECTROLYTIC CAPACITOR	47.00 25.0V RX TP	ケミコン			01
C81	**UR837470**	ELECTROLYTIC CAPACITOR	47.00 16.0V RX TP	ケミコン			01
C81	**UR847470**	ELECTROLYTIC CAPACITOR	47.00 25.0V RX TP	ケミコン			01
C95	**WB47700R**	ELECTROLYTIC CAPACITOR	330.00 35.0V RX TP	ケミコン ZL			01
C95	**WC30370R**	ELECTROLYTIC CAPACITOR	330.00 35.0V RX TP	ケミコン KZE			01
C96	**WB47690R**	ELECTROLYTIC CAPACITOR	470.00 16.0V RX TP	ケミコン ZL			01
C96	**WC30360R**	ELECTROLYTIC CAPACITOR	470.00 16.0V RX TP	ケミコン KZE			01
C97	**WB47690R**	ELECTROLYTIC CAPACITOR	470.00 16.0V RX TP	ケミコン ZL			01
C97	**WC30360R**	ELECTROLYTIC CAPACITOR	470.00 16.0V RX TP	ケミコン KZE			01
C142	**UR866470**	ELECTROLYTIC CAPACITOR	4.70 50.0V RX TP	ケミコン			01
C149	**UR837100**	ELECTROLYTIC CAPACITOR	10.00 16.0V RX TP	ケミコン			01
C152	**UR866470**	ELECTROLYTIC CAPACITOR	4.70 50.0V RX TP	ケミコン			01
C159	**UR837100**	ELECTROLYTIC CAPACITOR	10.00 16.0V RX TP	ケミコン			01
C166	**UR837100**	ELECTROLYTIC CAPACITOR	10.00 16.0V RX TP	ケミコン			01
C176	**UR837100**	ELECTROLYTIC CAPACITOR	10.00 16.0V RX TP	ケミコン			01
C201	**VE326900**	MONOLITHIC POLYESTER F. CAP.	0.56 50V J RX TP	積層マイラーコン			01
C201	**VR16930R**	MONOLITHIC POLYESTER F. CAP.	ECQ-V1H564JL3	積層マイラーコン			01
* C201	**WW502400**	MONOLITHIC POLYESTER F. CAP.	0.5600 63V J TP	マイラーコン			
C202	**VE326700**	MONOLITHIC POLYESTER F. CAP.	0.39 50V J RX TP	積層マイラーコン			01

✻: New Parts

RANK: Japan only

AM/DJK/HP/SW/VR

	REF NO.	PART NO.	DESCRIPTION		部品名	REMARKS	QTY	RANK
	C202	**VR169100**	MONOLITHIC POLYESTER F. CAP.	ECQ-V1H394JL3	積層マイラーコン			01
*	C202	**WW502200**	MONOLITHIC POLYESTER F. CAP.	0.3900 63V J TP	マイラーコン			
	C203	**UA354680**	POLYESTER FILM CAPACITOR	0.0680 50V J RX TP	マイラーコン			01
	C203	**UA954680**	POLYESTER FILM CAPACITOR	0.0680 50V J RX TP	マイラーコン			01
*	C203	**WW193900**	POLYESTER FILM CAPACITOR	0.068 100V J TP	マイラーコン			
	C204	**VE326600**	MONOLITHIC POLYESTER F. CAP.	0.33 50V J RX TP	積層マイラーコン			01
	C204	**VR169000**	MONOLITHIC POLYESTER F. CAP.	ECQ-V1H334JL3	積層マイラーコン			01
*	C204	**WW502100**	MONOLITHIC POLYESTER F. CAP.	0.3300 63V J TP	マイラーコン			
	C205	**UA354220**	POLYESTER FILM CAPACITOR	0.0220 50V J RX TP	マイラーコン			
*	C205	**WW193300**	POLYESTER FILM CAPACITOR	0.022 100V J TP	マイラーコン			
	C206	**UA354330**	POLYESTER FILM CAPACITOR	0.0330 50V J RX TP	マイラーコン			01
	C206	**UA954330**	POLYESTER FILM CAPACITOR	0.0330 50V J RX TP	マイラーコン			01
*	C206	**WW193500**	POLYESTER FILM CAPACITOR	0.033 100V J TP	マイラーコン			
	C207	**UA353330**	POLYESTER FILM CAPACITOR	3300P 50V J RX TP	マイラーコン			01
	C207	**UA953330**	POLYESTER FILM CAPACITOR	3300P 50V J RX TP	マイラーコン			01
*	C207	**WW192300**	POLYESTER FILM CAPACITOR	0.0033 100V J TP	マイラーコン			
	C208	**UA354470**	POLYESTER FILM CAPACITOR	0.0470 50V J RX TP	マイラーコン			
	C208	**UA954470**	POLYESTER FILM CAPACITOR	0.0470 50V J RX TP	マイラーコン			01
*	C208	**WW193700**	POLYESTER FILM CAPACITOR	0.047 100V J TP	マイラーコン			
	C209	**UA353560**	POLYESTER FILM CAPACITOR	5600P 50V J RX TP	マイラーコン			
*	C209	**WW192600**	POLYESTER FILM CAPACITOR	0.0056 100V J TP	マイラーコン			
	C210	**UA353220**	POLYESTER FILM CAPACITOR	2200P 50V J RX TP	マイラーコン			01
	C210	**WW192100**	POLYESTER FILM CAPACITOR	0.0022 100V J TP	マイラーコン			
	C232	**UR837470**	ELECTROLYTIC CAPACITOR	47.00 16.0V RX TP	ケミコン			01
	C232	**UR847470**	ELECTROLYTIC CAPACITOR	47.00 25.0V RX TP	ケミコン			01
	C301	**VE326900**	MONOLITHIC POLYESTER F. CAP.	0.56 50V J RX TP	積層マイラーコン			01
	C301	**VR16930R**	MONOLITHIC POLYESTER F. CAP.	ECQ-V1H564JL3	積層マイラーコン			01
*	C301	**WW502400**	MONOLITHIC POLYESTER F. CAP.	0.5600 63V J TP	マイラーコン			
	C302	**VE326700**	MONOLITHIC POLYESTER F. CAP.	0.39 50V J RX TP	積層マイラーコン			01
	C302	**VR169100**	MONOLITHIC POLYESTER F. CAP.	ECQ-V1H394JL3	積層マイラーコン			01
*	C302	**WW502200**	MONOLITHIC POLYESTER F. CAP.	0.3900 63V J TP	マイラーコン			
	C303	**UA354680**	POLYESTER FILM CAPACITOR	0.0680 50V J RX TP	マイラーコン			01
	C303	**UA954680**	POLYESTER FILM CAPACITOR	0.0680 50V J RX TP	マイラーコン			01
*	C303	**WW193900**	POLYESTER FILM CAPACITOR	0.068 100V J TP	マイラーコン			
	C304	**VE326600**	MONOLITHIC POLYESTER F. CAP.	0.33 50V J RX TP	積層マイラーコン			01
	C304	**VR169000**	MONOLITHIC POLYESTER F. CAP.	ECQ-V1H334JL3	積層マイラーコン			01
*	C304	**WW502100**	MONOLITHIC POLYESTER F. CAP.	0.3300 63V J TP	マイラーコン			
	C305	**UA354220**	POLYESTER FILM CAPACITOR	0.0220 50V J RX TP	マイラーコン			
*	C305	**WW193300**	POLYESTER FILM CAPACITOR	0.022 100V J TP	マイラーコン			
	C306	**UA354330**	POLYESTER FILM CAPACITOR	0.0330 50V J RX TP	マイラーコン			01
	C306	**UA954330**	POLYESTER FILM CAPACITOR	0.0330 50V J RX TP	マイラーコン			01
*	C306	**WW193500**	POLYESTER FILM CAPACITOR	0.033 100V J TP	マイラーコン			
	C307	**UA353330**	POLYESTER FILM CAPACITOR	3300P 50V J RX TP	マイラーコン			01
	C307	**UA953330**	POLYESTER FILM CAPACITOR	3300P 50V J RX TP	マイラーコン			01
*	C307	**WW192300**	POLYESTER FILM CAPACITOR	0.0033 100V J TP	マイラーコン			
	C308	**UA354470**	POLYESTER FILM CAPACITOR	0.0470 50V J RX TP	マイラーコン			
	C308	**UA954470**	POLYESTER FILM CAPACITOR	0.0470 50V J RX TP	マイラーコン			01
*	C308	**WW193700**	POLYESTER FILM CAPACITOR	0.047 100V J TP	マイラーコン			
	C309	**UA353560**	POLYESTER FILM CAPACITOR	5600P 50V J RX TP	マイラーコン			
*	C309	**WW192600**	POLYESTER FILM CAPACITOR	0.0056 100V J TP	マイラーコン			
	C310	**UA353220**	POLYESTER FILM CAPACITOR	2200P 50V J RX TP	マイラーコン			01
	C310	**WW192100**	POLYESTER FILM CAPACITOR	0.0022 100V J TP	マイラーコン			
	C332	**UR837470**	ELECTROLYTIC CAPACITOR	47.00 16.0V RX TP	ケミコン			01
	C332	**UR847470**	ELECTROLYTIC CAPACITOR	47.00 25.0V RX TP	ケミコン			01
	C415	**UR866220**	ELECTROLYTIC CAPACITOR	2.20 50.0V RX TP	ケミコン			01
	C417	**UR848100**	ELECTROLYTIC CAPACITOR	100.00 25.0V RX TP	ケミコン			01
	C425	**UR866220**	ELECTROLYTIC CAPACITOR	2.20 50.0V RX TP	ケミコン			01
	C427	**UR848100**	ELECTROLYTIC CAPACITOR	100.00 25.0V RX TP	ケミコン			01
	C428	**UR838220**	ELECTROLYTIC CAPACITOR	220.00 16.0V RX TP	ケミコン			01
	C432	**UR838220**	ELECTROLYTIC CAPACITOR	220.00 16.0V RX TP	ケミコン			01
	C441	**UR837100**	ELECTROLYTIC CAPACITOR	10.00 16.0V RX TP	ケミコン			01
	C446	**UR837100**	ELECTROLYTIC CAPACITOR	10.00 16.0V RX TP	ケミコン			01
	C451	**UR837100**	ELECTROLYTIC CAPACITOR	10.00 16.0V RX TP	ケミコン			01
	C456	**UR837100**	ELECTROLYTIC CAPACITOR	10.00 16.0V RX TP	ケミコン			01
*	C501	**V4881400**	ELECTROLYTIC CAPACITOR	100.00 25.0V TP	ケミコン PW			
	C501	**VN698000**	ELECTROLYTIC CAPACITOR	100.00 25.0V RX TP	ケミコン PS			01
*	C501	**WW786900**	ELECTROLYTIC CAPACITOR	100.0 25.0V TATETE	ケミコン KY			
*	C503	**V4881400**	ELECTROLYTIC CAPACITOR	100.00 25.0V TP	ケミコン PW			
	C503	**VN698000**	ELECTROLYTIC CAPACITOR	100.00 25.0V RX TP	ケミコン PS			01
*	C503	**WW786900**	ELECTROLYTIC CAPACITOR	100.0 25.0V TATETE	ケミコン KY			

✻: New Parts

RANK: Japan only

AM/DJK/HP/SW/VR

	REF NO.	PART NO.	DESCRIPTION		部品名	REMARKS	QTY	RANK
	C504	**WE200700**	ELECTROLYTIC CAPACITOR	0.47 50.0V RX TP	ケミコン VZ			01
	C505	**WN896800**	ELECTROLYTIC CAPACITOR	33 50.0V RX TP	ケミコン			01
	C511	**UA353820**	POLYESTER FILM CAPACITOR	8200P 50V J RX TP	マイラーコン			01
	C511	**UA953820**	POLYESTER FILM CAPACITOR	8200P 50V J RX TP	マイラーコン			
*	C511	**WW192800**	POLYESTER FILM CAPACITOR	0.0082 100V J TP	マイラーコン			
	C512	**UA353470**	POLYESTER FILM CAPACITOR	4700P 50V J RX TP	マイラーコン			01
*	C512	**WW192500**	POLYESTER FILM CAPACITOR	0.0047 100V J TP	マイラーコン			
	C513	**UR866220**	ELECTROLYTIC CAPACITOR	2.20 50.0V RX TP	ケミコン			01
	C514	**VE326600**	MONOLITHIC POLYESTER F. CAP.	0.33 50V J RX TP	積層マイラーコン			01
	C514	**VR169000**	MONOLITHIC POLYESTER F. CAP.	ECQ-V1H334JL3	積層マイラーコン			01
*	C514	**WW502100**	MONOLITHIC POLYESTER F. CAP.	0.3300 63V J TP	マイラーコン			
	C518	**VE326000**	MONOLITHIC POLYESTER F. CAP.	0.10 50V J RX TP	積層マイラーコン			01
	C518	**VR168300**	MONOLITHIC POLYESTER F. CAP.	ECQ-V1H104JL3	積層マイラーコン			01
*	C518	**WW501500**	MONOLITHIC POLYESTER F. CAP.	0.1000 63V J TP	マイラーコン			
	C519	**VE326000**	MONOLITHIC POLYESTER F. CAP.	0.10 50V J RX TP	積層マイラーコン			01
	C519	**VR168300**	MONOLITHIC POLYESTER F. CAP.	ECQ-V1H104JL3	積層マイラーコン			01
*	C519	**WW501500**	MONOLITHIC POLYESTER F. CAP.	0.1000 63V J TP	マイラーコン			
	C521	**UA353820**	POLYESTER FILM CAPACITOR	8200P 50V J RX TP	マイラーコン			01
	C521	**UA953820**	POLYESTER FILM CAPACITOR	8200P 50V J RX TP	マイラーコン			
*	C521	**WW192800**	POLYESTER FILM CAPACITOR	0.0082 100V J TP	マイラーコン			
	C522	**UA353470**	POLYESTER FILM CAPACITOR	4700P 50V J RX TP	マイラーコン			01
*	C522	**WW192500**	POLYESTER FILM CAPACITOR	0.0047 100V J TP	マイラーコン			
	C523	**UR866220**	ELECTROLYTIC CAPACITOR	2.20 50.0V RX TP	ケミコン			01
	C524	**VE326600**	MONOLITHIC POLYESTER F. CAP.	0.33 50V J RX TP	積層マイラーコン			01
	C524	**VR169000**	MONOLITHIC POLYESTER F. CAP.	ECQ-V1H334JL3	積層マイラーコン			01
*	C524	**WW502100**	MONOLITHIC POLYESTER F. CAP.	0.3300 63V J TP	マイラーコン			
	C528	**VE326000**	MONOLITHIC POLYESTER F. CAP.	0.10 50V J RX TP	積層マイラーコン			01
	C528	**VR168300**	MONOLITHIC POLYESTER F. CAP.	ECQ-V1H104JL3	積層マイラーコン			01
*	C528	**WW501500**	MONOLITHIC POLYESTER F. CAP.	0.1000 63V J TP	マイラーコン			
	C529	**VE326000**	MONOLITHIC POLYESTER F. CAP.	0.10 50V J RX TP	積層マイラーコン			01
	C529	**VR168300**	MONOLITHIC POLYESTER F. CAP.	ECQ-V1H104JL3	積層マイラーコン			01
*	C529	**WW501500**	MONOLITHIC POLYESTER F. CAP.	0.1000 63V J TP	マイラーコン			
	C531	**UA353470**	POLYESTER FILM CAPACITOR	4700P 50V J RX TP	マイラーコン			01
*	C531	**WW192500**	POLYESTER FILM CAPACITOR	0.0047 100V J TP	マイラーコン			
	C532	**UA353470**	POLYESTER FILM CAPACITOR	4700P 50V J RX TP	マイラーコン			01
*	C532	**WW192500**	POLYESTER FILM CAPACITOR	0.0047 100V J TP	マイラーコン			
	C533	**UR866100**	ELECTROLYTIC CAPACITOR	1.00 50.0V RX TP	ケミコン			01
	C534	**VE326800**	MONOLITHIC POLYESTER F. CAP.	0.47 50V J RX TP	積層マイラーコン			01
	C534	**VR169200**	MONOLITHIC POLYESTER F. CAP.	ECQ-V1H474JL3	積層マイラーコン			01
*	C534	**WW502300**	MONOLITHIC POLYESTER F. CAP.	0.47 63V J TP	マイラーコン			
	C536	**UR838220**	ELECTROLYTIC CAPACITOR	220.00 16.0V RX TP	ケミコン			01
	C537	**V7887400**	ELECTROLYTIC CAPACITOR	47.00 16.0V RX TP	ケミコン			
*	C538	**V4881400**	ELECTROLYTIC CAPACITOR	100.00 25.0V TP	ケミコン PW			
	C538	**VN698000**	ELECTROLYTIC CAPACITOR	100.00 25.0V RX TP	ケミコン PS			01
*	C538	**WW786900**	ELECTROLYTIC CAPACITOR	100.0 25.0V TATETE	ケミコン KY			
	C539	**VR168500**	MONOLITHIC POLYESTER F. CAP.	ECQ-V1H154JL3	積層マイラーコン			01
*	C539	**WW501700**	MONOLITHIC POLYESTER F. CAP.	0.1500 63V J TP	マイラーコン			
	C541	**UA353470**	POLYESTER FILM CAPACITOR	4700P 50V J RX TP	マイラーコン			01
*	C541	**WW192500**	POLYESTER FILM CAPACITOR	0.0047 100V J TP	マイラーコン			
	C542	**UA353470**	POLYESTER FILM CAPACITOR	4700P 50V J RX TP	マイラーコン			01
*	C542	**WW192500**	POLYESTER FILM CAPACITOR	0.0047 100V J TP	マイラーコン			
	C543	**UR866100**	ELECTROLYTIC CAPACITOR	1.00 50.0V RX TP	ケミコン			01
	C544	**VE326800**	MONOLITHIC POLYESTER F. CAP.	0.47 50V J RX TP	積層マイラーコン			01
	C544	**VR169200**	MONOLITHIC POLYESTER F. CAP.	ECQ-V1H474JL3	積層マイラーコン			01
*	C544	**WW502300**	MONOLITHIC POLYESTER F. CAP.	0.47 63V J TP	マイラーコン			
	C546	**UR838220**	ELECTROLYTIC CAPACITOR	220.00 16.0V RX TP	ケミコン			01
	C547	**V7887400**	ELECTROLYTIC CAPACITOR	47.00 16.0V RX TP	ケミコン			
*	C548	**V4881400**	ELECTROLYTIC CAPACITOR	100.00 25.0V TP	ケミコン PW			
	C548	**VN698000**	ELECTROLYTIC CAPACITOR	100.00 25.0V RX TP	ケミコン PS			01
*	C548	**WW786900**	ELECTROLYTIC CAPACITOR	100.0 25.0V TATETE	ケミコン KY			
	C549	**VR168500**	MONOLITHIC POLYESTER F. CAP.	ECQ-V1H154JL3	積層マイラーコン			01
*	C549	**WW501700**	MONOLITHIC POLYESTER F. CAP.	0.1500 63V J TP	マイラーコン			
*	C552	**V4881400**	ELECTROLYTIC CAPACITOR	100.00 25.0V TP	ケミコン PW			
	C552	**VN698000**	ELECTROLYTIC CAPACITOR	100.00 25.0V RX TP	ケミコン PS			01
*	C552	**WW786900**	ELECTROLYTIC CAPACITOR	100.0 25.0V TATETE	ケミコン KY			
*	C554	**V4881400**	ELECTROLYTIC CAPACITOR	100.00 25.0V TP	ケミコン PW			
	C554	**VN698000**	ELECTROLYTIC CAPACITOR	100.00 25.0V RX TP	ケミコン PS			01
*	C554	**WW786900**	ELECTROLYTIC CAPACITOR	100.0 25.0V TATETE	ケミコン KY			
	C922	**UR848100**	ELECTROLYTIC CAPACITOR	100.00 25.0V RX TP	ケミコン			01
	C932	**UR837470**	ELECTROLYTIC CAPACITOR	47.00 16.0V RX TP	ケミコン			01

*: New Parts

RANK: Japan only

AM/DJK/HP/SW/VR and DML

REF NO.	PART NO.	DESCRIPTION		部品名	REMARKS	QTY	RANK
C932	**UR847470**	ELECTROLYTIC CAPACITOR	47.00 25.0V RX TP	ケミコン			01
C933	**UR848100**	ELECTROLYTIC CAPACITOR	100.00 25.0V RX TP	ケミコン			01
C934	**UR848100**	ELECTROLYTIC CAPACITOR	100.00 25.0V RX TP	ケミコン			01
C2003	**UR848100**	ELECTROLYTIC CAPACITOR	100.00 25.0V RX TP	ケミコン			01
C2004	**UR848100**	ELECTROLYTIC CAPACITOR	100.00 25.0V RX TP	ケミコン			01
EM96	**VD54270R**	EMI FILTER	DSS6NF31C223Q93A	ＬＣフィルターＥＭＩ			01
-98	**VD54270R**	EMI FILTER	DSS6NF31C223Q93A	ＬＣフィルターＥＭＩ			01
L13	**GE300670**	FERRITE BEAD	BL02RN2R1P1A TATET	フェライトビーズ			02
L13	**VM89860R**	FERRITE BEAD	EXCELDR35V TAPING	フェライトビーズ			01
L14	**V3085000**	CHOKE COIL	4.0uH R-5C TE	チョークコイル			
L15	**V3085000**	CHOKE COIL	4.0uH R-5C TE	チョークコイル			
L43	**GE300670**	FERRITE BEAD	BL02RN2R1P1A TATET	フェライトビーズ			02
L43	**VM89860R**	FERRITE BEAD	EXCELDR35V TAPING	フェライトビーズ			01
L44	**V3085000**	CHOKE COIL	4.0uH R-5C TE	チョークコイル			
L45	**V3085000**	CHOKE COIL	4.0uH R-5C TE	チョークコイル			
L47	**V3085000**	CHOKE COIL	4.0uH R-5C TE	チョークコイル			
L48	**V3085000**	CHOKE COIL	4.0uH R-5C TE	チョークコイル			
L49	**GE300670**	FERRITE BEAD	BL02RN2R1P1A TATET	フェライトビーズ			02
L49	**VM89860R**	FERRITE BEAD	EXCELDR35V TAPING	フェライトビーズ			01
L753	**V3085000**	CHOKE COIL	4.0uH R-5C TE	チョークコイル			
R471	**HF454680**	CARBON RESISTOR	68.0 1/4 J AX TP	カーボン抵抗			01
R472	**HF455330**	CARBON RESISTOR	330.0 1/4 J AX TP	カーボン抵抗			01
R481	**HF454680**	CARBON RESISTOR	68.0 1/4 J AX TP	カーボン抵抗			01
R482	**HF455330**	CARBON RESISTOR	330.0 1/4 J AX TP	カーボン抵抗			01
R516	**WD55670R**	FLAME PROOF CARBON RESISTOR	2.2 1/4 J TE-26	不燃化カーボン抵抗			01
R516	**WW158100**	FLAME PROOF CARBON RESISTOR	2.2 1/4 J T26	不燃化カーボン抵抗			01
R517	**WD55670R**	FLAME PROOF CARBON RESISTOR	2.2 1/4 J TE-26	不燃化カーボン抵抗			01
R517	**WW158100**	FLAME PROOF CARBON RESISTOR	2.2 1/4 J T26	不燃化カーボン抵抗			01
R526	**WD55670R**	FLAME PROOF CARBON RESISTOR	2.2 1/4 J TE-26	不燃化カーボン抵抗			01
R526	**WW158100**	FLAME PROOF CARBON RESISTOR	2.2 1/4 J T26	不燃化カーボン抵抗			01
R527	**WD55670R**	FLAME PROOF CARBON RESISTOR	2.2 1/4 J TE-26	不燃化カーボン抵抗			01
R527	**WW158100**	FLAME PROOF CARBON RESISTOR	2.2 1/4 J T26	不燃化カーボン抵抗			01
R536	**WD55670R**	FLAME PROOF CARBON RESISTOR	2.2 1/4 J TE-26	不燃化カーボン抵抗			01
R536	**WW158100**	FLAME PROOF CARBON RESISTOR	2.2 1/4 J T26	不燃化カーボン抵抗			01
R546	**WD55670R**	FLAME PROOF CARBON RESISTOR	2.2 1/4 J TE-26	不燃化カーボン抵抗			01
R546	**WW158100**	FLAME PROOF CARBON RESISTOR	2.2 1/4 J T26	不燃化カーボン抵抗			01
R811	**HF454220**	CARBON RESISTOR	22.0 1/4 J AX TP	カーボン抵抗			01
R821	**HF454220**	CARBON RESISTOR	22.0 1/4 J AX TP	カーボン抵抗			01
ZD59	**VG437300**	ZENER DIODE	MTZ J 5.1A 5.1V TP	ツェナーダイオード			01
*	**WW421400**	CIRCUIT BOARD	DML	ＤＭＬシート	(YD221C0)		
C12	**US625100**	CERAMIC CAPACITOR (CHIP)	0.100 10V K RECT.	チップセラ（ＢＪ）			01
C17	**US625100**	CERAMIC CAPACITOR (CHIP)	0.100 10V K RECT.	チップセラ（ＢＪ）			01
C23	**WG888300**	MONOLITHIC CERAMIC CAP(CHIP)	10.0 6.3V K TP	チップ積層セラコン			01
C26	**US625100**	CERAMIC CAPACITOR (CHIP)	0.100 10V K RECT.	チップセラ（ＢＪ）			01
C31	**US625100**	CERAMIC CAPACITOR (CHIP)	0.100 10V K RECT.	チップセラ（ＢＪ）			01
-33	**US625100**	CERAMIC CAPACITOR (CHIP)	0.100 10V K RECT.	チップセラ（ＢＪ）			01
C35	**WG888300**	MONOLITHIC CERAMIC CAP(CHIP)	10.0 6.3V K TP	チップ積層セラコン			01
C43	**US625100**	CERAMIC CAPACITOR (CHIP)	0.100 10V K RECT.	チップセラ（ＢＪ）			01
C46	**US625100**	CERAMIC CAPACITOR (CHIP)	0.100 10V K RECT.	チップセラ（ＢＪ）			01
C51	**WG888300**	MONOLITHIC CERAMIC CAP(CHIP)	10.0 6.3V K TP	チップ積層セラコン			01
C52	**US625100**	CERAMIC CAPACITOR (CHIP)	0.100 10V K RECT.	チップセラ（ＢＪ）			01
C53	**US661470**	CERAMIC CAPACITOR (CHIP)	47P 50V J RECT.	チップセラ（ＣＨ）			01
C54	**US625100**	CERAMIC CAPACITOR (CHIP)	0.100 10V K RECT.	チップセラ（ＢＪ）			01
C57	**WG888300**	MONOLITHIC CERAMIC CAP(CHIP)	10.0 6.3V K TP	チップ積層セラコン			01
C58	**US662470**	CERAMIC CAPACITOR (CHIP)	470P 50V K RECT.	チップセラ（Ｂ）			01
C59	**US662470**	CERAMIC CAPACITOR (CHIP)	470P 50V K RECT.	チップセラ（Ｂ）			01
C60	**US625100**	CERAMIC CAPACITOR (CHIP)	0.100 10V K RECT.	チップセラ（ＢＪ）			01
-66	**US625100**	CERAMIC CAPACITOR (CHIP)	0.100 10V K RECT.	チップセラ（ＢＪ）			01
C67	**US661100**	CERAMIC CAPACITOR (CHIP)	10P 50V D RECT.	チップセラ（ＣＨ）			01
C68	**US661100**	CERAMIC CAPACITOR (CHIP)	10P 50V D RECT.	チップセラ（ＣＨ）			01
C69	**WG888300**	MONOLITHIC CERAMIC CAP(CHIP)	10.0 6.3V K TP	チップ積層セラコン			01
C76	**US625100**	CERAMIC CAPACITOR (CHIP)	0.100 10V K RECT.	チップセラ（ＢＪ）			01
-83	**US625100**	CERAMIC CAPACITOR (CHIP)	0.100 10V K RECT.	チップセラ（ＢＪ）			01
C85	**US625100**	CERAMIC CAPACITOR (CHIP)	0.100 10V K RECT.	チップセラ（ＢＪ）			01
C87	**US625100**	CERAMIC CAPACITOR (CHIP)	0.100 10V K RECT.	チップセラ（ＢＪ）			01
C88	**US625100**	CERAMIC CAPACITOR (CHIP)	0.100 10V K RECT.	チップセラ（ＢＪ）			01
C90	**WG888300**	MONOLITHIC CERAMIC CAP(CHIP)	10.0 6.3V K TP	チップ積層セラコン			01
C91	**US664100**	CERAMIC CAPACITOR (CHIP)	0.010 50V Z RECT.	チップセラ（Ｆ）			01
C92	**US625100**	CERAMIC CAPACITOR (CHIP)	0.100 10V K RECT.	チップセラ（ＢＪ）			01

*: New Parts

RANK: Japan only

DML

REF NO.	PART NO.	DESCRIPTION		部品名	REMARKS	QTY	RANK
C93	**US625100**	CERAMIC CAPACITOR (CHIP)	0.100 10V K RECT.	チップセラ（BJ）			01
C95	**US664100**	CERAMIC CAPACITOR (CHIP)	0.010 50V Z RECT.	チップセラ（F）			01
C96	**US625100**	CERAMIC CAPACITOR (CHIP)	0.100 10V K RECT.	チップセラ（BJ）			01
C97	**US625100**	CERAMIC CAPACITOR (CHIP)	0.100 10V K RECT.	チップセラ（BJ）			01
C102	**US625100**	CERAMIC CAPACITOR (CHIP)	0.100 10V K RECT.	チップセラ（BJ）			01
C103	**US625100**	CERAMIC CAPACITOR (CHIP)	0.100 10V K RECT.	チップセラ（BJ）			01
C104	**US663100**	CERAMIC CAPACITOR (CHIP)	1000P 50V K RECT.	チップセラ（B）			01
C105	**US663100**	CERAMIC CAPACITOR (CHIP)	1000P 50V K RECT.	チップセラ（B）			01
C106	**US625100**	CERAMIC CAPACITOR (CHIP)	0.100 10V K RECT.	チップセラ（BJ）			01
C107	**US663100**	CERAMIC CAPACITOR (CHIP)	1000P 50V K RECT.	チップセラ（B）			01
C110	**US663100**	CERAMIC CAPACITOR (CHIP)	1000P 50V K RECT.	チップセラ（B）			01
C112	**US625100**	CERAMIC CAPACITOR (CHIP)	0.100 10V K RECT.	チップセラ（BJ）			01
C114	**US663100**	CERAMIC CAPACITOR (CHIP)	1000P 50V K RECT.	チップセラ（B）			01
C115	**US625100**	CERAMIC CAPACITOR (CHIP)	0.100 10V K RECT.	チップセラ（BJ）			01
C117	**US663100**	CERAMIC CAPACITOR (CHIP)	1000P 50V K RECT.	チップセラ（B）			01
C123	**US662100**	CERAMIC CAPACITOR (CHIP)	100P 50V J RECT.	チップセラ（CH）			
C124	**US625100**	CERAMIC CAPACITOR (CHIP)	0.100 10V K RECT.	チップセラ（BJ）			01
C126	**US625100**	CERAMIC CAPACITOR (CHIP)	0.100 10V K RECT.	チップセラ（BJ）			01
C127	**US625100**	CERAMIC CAPACITOR (CHIP)	0.100 10V K RECT.	チップセラ（BJ）			01
C150	**US625100**	CERAMIC CAPACITOR (CHIP)	0.100 10V K RECT.	チップセラ（BJ）			01
C151	**WD758300**	CERAMIC CAPACITOR (CHIP)	10U 10V K RECT.	チップセラ			01
C152	**US662100**	CERAMIC CAPACITOR (CHIP)	100P 50V J RECT.	チップセラ（CH）			
C303	**US662100**	CERAMIC CAPACITOR (CHIP)	100P 50V J RECT.	チップセラ（CH）			
C305	**US625100**	CERAMIC CAPACITOR (CHIP)	0.100 10V K RECT.	チップセラ（BJ）			01
C306	**US625100**	CERAMIC CAPACITOR (CHIP)	0.100 10V K RECT.	チップセラ（BJ）			01
C310	**US661220**	CERAMIC CAPACITOR (CHIP)	22P 50V J RECT.	チップセラ（CH）			
C312	**WG888300**	MONOLITHIC CERAMIC CAP(CHIP)	10.0 6.3V K TP	チップ積層セラコン			01
C313	**US625100**	CERAMIC CAPACITOR (CHIP)	0.100 10V K RECT.	チップセラ（BJ）			01
-317	**US625100**	CERAMIC CAPACITOR (CHIP)	0.100 10V K RECT.	チップセラ（BJ）			01
C323	**US661150**	CERAMIC CAPACITOR (CHIP)	15P 50V J RECT.	チップセラ（CH）			01
C326	**US661150**	CERAMIC CAPACITOR (CHIP)	15P 50V J RECT.	チップセラ（CH）			01
C327	**US661220**	CERAMIC CAPACITOR (CHIP)	22P 50V J RECT.	チップセラ（CH）			
C362	**US661220**	CERAMIC CAPACITOR (CHIP)	22P 50V J RECT.	チップセラ（CH）			
C396	**US625100**	CERAMIC CAPACITOR (CHIP)	0.100 10V K RECT.	チップセラ（BJ）			01
C438	**US662390**	CERAMIC CAPACITOR (CHIP)	390P 50V K RECT.	チップセラ（B）			
C439	**US662390**	CERAMIC CAPACITOR (CHIP)	390P 50V K RECT.	チップセラ（B）			
C451	**US635100**	CERAMIC CAPACITOR (CHIP)	0.100 16V Z RECT.	チップセラ（F）			01
C452	**US662330**	CERAMIC CAPACITOR (CHIP)	330P 50V K RECT.	チップセラ（B）			
C453	**US662330**	CERAMIC CAPACITOR (CHIP)	330P 50V K RECT.	チップセラ（B）			
C456	**US662330**	CERAMIC CAPACITOR (CHIP)	330P 50V K RECT.	チップセラ（B）			
C457	**US662330**	CERAMIC CAPACITOR (CHIP)	330P 50V K RECT.	チップセラ（B）			
C462	**US663100**	CERAMIC CAPACITOR (CHIP)	1000P 50V K RECT.	チップセラ（B）			01
C463	**US663100**	CERAMIC CAPACITOR (CHIP)	1000P 50V K RECT.	チップセラ（B）			01
C467	**US625100**	CERAMIC CAPACITOR (CHIP)	0.100 10V K RECT.	チップセラ（BJ）			01
C470	**US635100**	CERAMIC CAPACITOR (CHIP)	0.100 16V Z RECT.	チップセラ（F）			01
C475	**US663100**	CERAMIC CAPACITOR (CHIP)	1000P 50V K RECT.	チップセラ（B）			01
-477	**US663100**	CERAMIC CAPACITOR (CHIP)	1000P 50V K RECT.	チップセラ（B）			01
C479	**US635100**	CERAMIC CAPACITOR (CHIP)	0.100 16V Z RECT.	チップセラ（F）			01
C700	**US625100**	CERAMIC CAPACITOR (CHIP)	0.100 10V K RECT.	チップセラ（BJ）			01
-702	**US625100**	CERAMIC CAPACITOR (CHIP)	0.100 10V K RECT.	チップセラ（BJ）			01
C704	**US625100**	CERAMIC CAPACITOR (CHIP)	0.100 10V K RECT.	チップセラ（BJ）			01
C705	**US625100**	CERAMIC CAPACITOR (CHIP)	0.100 10V K RECT.	チップセラ（BJ）			01
C707	**US625100**	CERAMIC CAPACITOR (CHIP)	0.100 10V K RECT.	チップセラ（BJ）			01
C708	**US625100**	CERAMIC CAPACITOR (CHIP)	0.100 10V K RECT.	チップセラ（BJ）			01
C712	**US625100**	CERAMIC CAPACITOR (CHIP)	0.100 10V K RECT.	チップセラ（BJ）			01
-716	**US625100**	CERAMIC CAPACITOR (CHIP)	0.100 10V K RECT.	チップセラ（BJ）			01
C718	**US625100**	CERAMIC CAPACITOR (CHIP)	0.100 10V K RECT.	チップセラ（BJ）			01
C745	**US625100**	CERAMIC CAPACITOR (CHIP)	0.100 10V K RECT.	チップセラ（BJ）			01
C746	**US625100**	CERAMIC CAPACITOR (CHIP)	0.100 10V K RECT.	チップセラ（BJ）			01
C750	**US625100**	CERAMIC CAPACITOR (CHIP)	0.100 10V K RECT.	チップセラ（BJ）			01
-758	**US625100**	CERAMIC CAPACITOR (CHIP)	0.100 10V K RECT.	チップセラ（BJ）			01
C762	**US625100**	CERAMIC CAPACITOR (CHIP)	0.100 10V K RECT.	チップセラ（BJ）			01
C765	**US625100**	CERAMIC CAPACITOR (CHIP)	0.100 10V K RECT.	チップセラ（BJ）			01
-767	**US625100**	CERAMIC CAPACITOR (CHIP)	0.100 10V K RECT.	チップセラ（BJ）			01
C798	**US625100**	CERAMIC CAPACITOR (CHIP)	0.100 10V K RECT.	チップセラ（BJ）			01
IC3	**X2890B00**	IC	HD6417727F160CV	I C	CPU		15
IC12	**XZ287A0R**	IC	SN74LVC245APWR	I C	TRANSCEIVER		01
-15	**XZ287A0R**	IC	SN74LVC245APWR	I C	TRANSCEIVER		01
IC16	**XV893A0R**	IC	TC74VHC139FT(EL)	I C	DECODER		02
IC17	**XZ287A0R**	IC	SN74LVC245APWR	I C	TRANSCEIVER		01

✻: New Parts

RANK: Japan only

DML

REF NO.	PART NO.	DESCRIPTION		部品名	REMARKS	QTY	RANK
IC18	**XZ287A0R**	IC	SN74LVC245APWR	I C	TRANSCEIVER		01
IC21	**X3865A0R**	IC	SN74LV126APWR	I C	BUFFER		
IC22	**X7950A00**	IC	BD6516F-E2	I C	HIGH SIDE SWITCH		03
IC23	**X6788A0R**	IC	DS90LV011ATMF/NOPB	I C	LVDS DRIVER		
IC301	**XW814A0R**	IC	TC7SET32FU(TE85L,F)	I C	OR GATE		01
IC303	**YA492A00**	IC	GTL2002DP	I C	TRANSLATOR		
IC304	**X8940A00**	IC	T6TJ3XBG-0001(O)	I C	SWP51L		09
IC403	**X5482A00**	IC	NE5532DR	I C	OP AMP		01
IC405	**X5482A00**	IC	NE5532DR	I C	OP AMP		01
L34	**WK139000**	CHIP INDUCTANCE	600 BK1005HM601-T	チップインダクタ			01
-37	**WK139000**	CHIP INDUCTANCE	600 BK1005HM601-T	チップインダクタ			01
L40	**WK139000**	CHIP INDUCTANCE	600 BK1005HM601-T	チップインダクタ			01
-42	**WK139000**	CHIP INDUCTANCE	600 BK1005HM601-T	チップインダクタ			01
L44	**WK139000**	CHIP INDUCTANCE	600 BK1005HM601-T	チップインダクタ			01
-46	**WK139000**	CHIP INDUCTANCE	600 BK1005HM601-T	チップインダクタ			01
L50	**WE863900**	COMMON MODE COIL	DLP11SN900HL2L	コモンモードコイル			01
L52	**WK139000**	CHIP INDUCTANCE	600 BK1005HM601-T	チップインダクタ			01
-59	**WK139000**	CHIP INDUCTANCE	600 BK1005HM601-T	チップインダクタ			01
L63	**WK139000**	CHIP INDUCTANCE	600 BK1005HM601-T	チップインダクタ			01
-65	**WK139000**	CHIP INDUCTANCE	600 BK1005HM601-T	チップインダクタ			01
L301	**V2747000**	CHIP INDUCTANCE	BLM18PG600SN1	チップインダクタ			
L409	**WK139000**	CHIP INDUCTANCE	600 BK1005HM601-T	チップインダクタ			01
-411	**WK139000**	CHIP INDUCTANCE	600 BK1005HM601-T	チップインダクタ			01
R2	**RD456100**	CARBON RESISTOR (CHIP)	1.0K 63M J RECT.	チップ抵抗			01
R3	**RD457100**	CARBON RESISTOR (CHIP)	10.0K 63M J RECT.	チップ抵抗			01
R4	**RD457100**	CARBON RESISTOR (CHIP)	10.0K 63M J RECT.	チップ抵抗			01
R6	**RD457100**	CARBON RESISTOR (CHIP)	10.0K 63M J RECT.	チップ抵抗			01
R10	**RD45427R**	CARBON RESISTOR (CHIP)	27.0 63M J RECT.	チップ抵抗			01
-13	**RD45427R**	CARBON RESISTOR (CHIP)	27.0 63M J RECT.	チップ抵抗			01
R14	**RD455100**	CARBON RESISTOR (CHIP)	100.0 63M J RECT.	チップ抵抗			01
R18	**RD454470**	CARBON RESISTOR (CHIP)	47.0 63M J RECT.	チップ抵抗			01
R19	**RD454680**	CARBON RESISTOR (CHIP)	68.0 63M J RECT.	チップ抵抗			01
-22	**RD454680**	CARBON RESISTOR (CHIP)	68.0 63M J RECT.	チップ抵抗			01
R24	**RD457100**	CARBON RESISTOR (CHIP)	10.0K 63M J RECT.	チップ抵抗			01
-26	**RD457100**	CARBON RESISTOR (CHIP)	10.0K 63M J RECT.	チップ抵抗			01
R27	**RD454680**	CARBON RESISTOR (CHIP)	68.0 63M J RECT.	チップ抵抗			01
-31	**RD454680**	CARBON RESISTOR (CHIP)	68.0 63M J RECT.	チップ抵抗			01
R32	**RD457100**	CARBON RESISTOR (CHIP)	10.0K 63M J RECT.	チップ抵抗			01
R33	**RD457100**	CARBON RESISTOR (CHIP)	10.0K 63M J RECT.	チップ抵抗			01
R34	**RD454680**	CARBON RESISTOR (CHIP)	68.0 63M J RECT.	チップ抵抗			01
-36	**RD454680**	CARBON RESISTOR (CHIP)	68.0 63M J RECT.	チップ抵抗			01
R39	**RD454680**	CARBON RESISTOR (CHIP)	68.0 63M J RECT.	チップ抵抗			01
R41	**RD454680**	CARBON RESISTOR (CHIP)	68.0 63M J RECT.	チップ抵抗			01
R42	**RD454680**	CARBON RESISTOR (CHIP)	68.0 63M J RECT.	チップ抵抗			01
R43	**RD457100**	CARBON RESISTOR (CHIP)	10.0K 63M J RECT.	チップ抵抗			01
R44	**RD455100**	CARBON RESISTOR (CHIP)	100.0 63M J RECT.	チップ抵抗			01
R48	**RD45000R**	CARBON RESISTOR (CHIP)	0.00 63M J RECT.	チップ抵抗			01
R50	**RD457100**	CARBON RESISTOR (CHIP)	10.0K 63M J RECT.	チップ抵抗			01
R51	**RD457100**	CARBON RESISTOR (CHIP)	10.0K 63M J RECT.	チップ抵抗			01
R52	**RD45615R**	CARBON RESISTOR (CHIP)	1.5K 63M J RECT.	チップ抵抗			01
R53	**RD455330**	CARBON RESISTOR (CHIP)	330.0 63M J RECT.	チップ抵抗			01
R54	**RD454680**	CARBON RESISTOR (CHIP)	68.0 63M J RECT.	チップ抵抗			01
R55	**RD454680**	CARBON RESISTOR (CHIP)	68.0 63M J RECT.	チップ抵抗			01
R57	**RD454680**	CARBON RESISTOR (CHIP)	68.0 63M J RECT.	チップ抵抗			01
R58	**RD455100**	CARBON RESISTOR (CHIP)	100.0 63M J RECT.	チップ抵抗			01
R59	**RD45427R**	CARBON RESISTOR (CHIP)	27.0 63M J RECT.	チップ抵抗			01
R60	**RD454680**	CARBON RESISTOR (CHIP)	68.0 63M J RECT.	チップ抵抗			01
-63	**RD454680**	CARBON RESISTOR (CHIP)	68.0 63M J RECT.	チップ抵抗			01
R64	**RD458470**	CARBON RESISTOR (CHIP)	470.0K 63M J RECT.	チップ抵抗			
R65	**RD458470**	CARBON RESISTOR (CHIP)	470.0K 63M J RECT.	チップ抵抗			
R67	**RD45000R**	CARBON RESISTOR (CHIP)	0.00 63M J RECT.	チップ抵抗			01
R68	**RD45427R**	CARBON RESISTOR (CHIP)	27.0 63M J RECT.	チップ抵抗			01
R69	**RD45427R**	CARBON RESISTOR (CHIP)	27.0 63M J RECT.	チップ抵抗			01
R72	**RD454680**	CARBON RESISTOR (CHIP)	68.0 63M J RECT.	チップ抵抗			01
R74	**RD454680**	CARBON RESISTOR (CHIP)	68.0 63M J RECT.	チップ抵抗			01
R82	**RD454680**	CARBON RESISTOR (CHIP)	68.0 63M J RECT.	チップ抵抗			01
R83	**RD454680**	CARBON RESISTOR (CHIP)	68.0 63M J RECT.	チップ抵抗			01
R86	**RD455100**	CARBON RESISTOR (CHIP)	100.0 63M J RECT.	チップ抵抗			01
R87	**RD45427R**	CARBON RESISTOR (CHIP)	27.0 63M J RECT.	チップ抵抗			01
R91	**RD455100**	CARBON RESISTOR (CHIP)	100.0 63M J RECT.	チップ抵抗			01

✻: New Parts

RANK: Japan only

DML

REF NO.	PART NO.	DESCRIPTION		部品名	REMARKS	QTY	RANK
R92	**RD45427R**	CARBON RESISTOR (CHIP)	27.0 63M J RECT.	チップ抵抗			01
R93	**RD456470**	CARBON RESISTOR (CHIP)	4.7K 63M J RECT.	チップ抵抗			01
R97	**RD456680**	CARBON RESISTOR (CHIP)	6.8K 63M J RECT.	チップ抵抗			01
R98	**RD457100**	CARBON RESISTOR (CHIP)	10.0K 63M J RECT.	チップ抵抗			01
R100	**RD456100**	CARBON RESISTOR (CHIP)	1.0K 63M J RECT.	チップ抵抗			01
R103	**RD456100**	CARBON RESISTOR (CHIP)	1.0K 63M J RECT.	チップ抵抗			01
-105	**RD456100**	CARBON RESISTOR (CHIP)	1.0K 63M J RECT.	チップ抵抗			01
R106	**RD457220**	CARBON RESISTOR (CHIP)	22.0K 63M J RECT.	チップ抵抗			01
R108	**RD454680**	CARBON RESISTOR (CHIP)	68.0 63M J RECT.	チップ抵抗			01
R109	**RD454680**	CARBON RESISTOR (CHIP)	68.0 63M J RECT.	チップ抵抗			01
R110	**RD45522R**	CARBON RESISTOR (CHIP)	220.0 63M J RECT.	チップ抵抗			01
R111	**RD457100**	CARBON RESISTOR (CHIP)	10.0K 63M J RECT.	チップ抵抗			01
R113	**RD457100**	CARBON RESISTOR (CHIP)	10.0K 63M J RECT.	チップ抵抗			01
R114	**RD458100**	CARBON RESISTOR (CHIP)	100.0K 63M J RECT.	チップ抵抗			01
R115	**RD456220**	CARBON RESISTOR (CHIP)	2.2K 63M J RECT.	チップ抵抗			01
R116	**RD45615R**	CARBON RESISTOR (CHIP)	1.5K 63M J RECT.	チップ抵抗			01
R117	**RD456220**	CARBON RESISTOR (CHIP)	2.2K 63M J RECT.	チップ抵抗			01
R119	**RD45000R**	CARBON RESISTOR (CHIP)	0.00 63M J RECT.	チップ抵抗			01
R120	**RD45427R**	CARBON RESISTOR (CHIP)	27.0 63M J RECT.	チップ抵抗			01
R145	**RD456100**	CARBON RESISTOR (CHIP)	1.0K 63M J RECT.	チップ抵抗			01
R146	**RD45747R**	CARBON RESISTOR (CHIP)	47.0K 63M J RECT.	チップ抵抗			01
R148	**RD457100**	CARBON RESISTOR (CHIP)	10.0K 63M J RECT.	チップ抵抗			01
R150	**RD457100**	CARBON RESISTOR (CHIP)	10.0K 63M J RECT.	チップ抵抗			01
R151	**RD457100**	CARBON RESISTOR (CHIP)	10.0K 63M J RECT.	チップ抵抗			01
R300	**RD454680**	CARBON RESISTOR (CHIP)	68.0 63M J RECT.	チップ抵抗			01
-302	**RD454680**	CARBON RESISTOR (CHIP)	68.0 63M J RECT.	チップ抵抗			01
R303	**RD457100**	CARBON RESISTOR (CHIP)	10.0K 63M J RECT.	チップ抵抗			01
R304	**RD455680**	CARBON RESISTOR (CHIP)	680.0 63M J RECT.	チップ抵抗			01
R305	**RD45427R**	CARBON RESISTOR (CHIP)	27.0 63M J RECT.	チップ抵抗			01
R306	**RD457100**	CARBON RESISTOR (CHIP)	10.0K 63M J RECT.	チップ抵抗			01
R307	**RD454680**	CARBON RESISTOR (CHIP)	68.0 63M J RECT.	チップ抵抗			01
R308	**RD457100**	CARBON RESISTOR (CHIP)	10.0K 63M J RECT.	チップ抵抗			01
R309	**RD454680**	CARBON RESISTOR (CHIP)	68.0 63M J RECT.	チップ抵抗			01
-312	**RD454680**	CARBON RESISTOR (CHIP)	68.0 63M J RECT.	チップ抵抗			01
R313	**RD45427R**	CARBON RESISTOR (CHIP)	27.0 63M J RECT.	チップ抵抗			01
R314	**RD457100**	CARBON RESISTOR (CHIP)	10.0K 63M J RECT.	チップ抵抗			01
R315	**RD454680**	CARBON RESISTOR (CHIP)	68.0 63M J RECT.	チップ抵抗			01
R316	**RD457100**	CARBON RESISTOR (CHIP)	10.0K 63M J RECT.	チップ抵抗			01
R318	**RD457100**	CARBON RESISTOR (CHIP)	10.0K 63M J RECT.	チップ抵抗			01
-320	**RD457100**	CARBON RESISTOR (CHIP)	10.0K 63M J RECT.	チップ抵抗			01
R321	**RD454680**	CARBON RESISTOR (CHIP)	68.0 63M J RECT.	チップ抵抗			01
R322	**RD45515R**	CARBON RESISTOR (CHIP)	150.0 63M J RECT.	チップ抵抗			01
R323	**RD454680**	CARBON RESISTOR (CHIP)	68.0 63M J RECT.	チップ抵抗			01
-327	**RD454680**	CARBON RESISTOR (CHIP)	68.0 63M J RECT.	チップ抵抗			01
R328	**RD457100**	CARBON RESISTOR (CHIP)	10.0K 63M J RECT.	チップ抵抗			01
R329	**RD454680**	CARBON RESISTOR (CHIP)	68.0 63M J RECT.	チップ抵抗			01
R331	**RD454680**	CARBON RESISTOR (CHIP)	68.0 63M J RECT.	チップ抵抗			01
R333	**RD454680**	CARBON RESISTOR (CHIP)	68.0 63M J RECT.	チップ抵抗			01
R335	**RD45427R**	CARBON RESISTOR (CHIP)	27.0 63M J RECT.	チップ抵抗			01
R336	**RD454470**	CARBON RESISTOR (CHIP)	47.0 63M J RECT.	チップ抵抗			01
R337	**RD454680**	CARBON RESISTOR (CHIP)	68.0 63M J RECT.	チップ抵抗			01
R338	**RD459100**	CARBON RESISTOR (CHIP)	1.0M 63M J RECT.	チップ抵抗			01
R339	**RD45615R**	CARBON RESISTOR (CHIP)	1.5K 63M J RECT.	チップ抵抗			01
R341	**RD45427R**	CARBON RESISTOR (CHIP)	27.0 63M J RECT.	チップ抵抗			01
R344	**RD45427R**	CARBON RESISTOR (CHIP)	27.0 63M J RECT.	チップ抵抗			01
R351	**RD458200**	CARBON RESISTOR (CHIP)	200.0K 63M J RECT.	チップ抵抗			
R416	**RD456470**	CARBON RESISTOR (CHIP)	4.7K 63M J RECT.	チップ抵抗			01
-419	**RD456470**	CARBON RESISTOR (CHIP)	4.7K 63M J RECT.	チップ抵抗			01
R424	**RD456680**	CARBON RESISTOR (CHIP)	6.8K 63M J RECT.	チップ抵抗			01
R425	**RD456680**	CARBON RESISTOR (CHIP)	6.8K 63M J RECT.	チップ抵抗			01
R428	**RD456680**	CARBON RESISTOR (CHIP)	6.8K 63M J RECT.	チップ抵抗			01
R429	**RD456470**	CARBON RESISTOR (CHIP)	4.7K 63M J RECT.	チップ抵抗			01
R430	**RD456470**	CARBON RESISTOR (CHIP)	4.7K 63M J RECT.	チップ抵抗			01
R431	**RD456680**	CARBON RESISTOR (CHIP)	6.8K 63M J RECT.	チップ抵抗			01
R432	**RD456470**	CARBON RESISTOR (CHIP)	4.7K 63M J RECT.	チップ抵抗			01
R433	**RD456470**	CARBON RESISTOR (CHIP)	4.7K 63M J RECT.	チップ抵抗			01
R446	**RD454470**	CARBON RESISTOR (CHIP)	47.0 63M J RECT.	チップ抵抗			01
R447	**RD454470**	CARBON RESISTOR (CHIP)	47.0 63M J RECT.	チップ抵抗			01
R451	**RD456470**	CARBON RESISTOR (CHIP)	4.7K 63M J RECT.	チップ抵抗			01
R452	**RD456470**	CARBON RESISTOR (CHIP)	4.7K 63M J RECT.	チップ抵抗			01

✻: New Parts

RANK: Japan only

DML

REF NO.	PART NO.	DESCRIPTION		部品名	REMARKS	QTY	RANK
R453	**RD45000R**	CARBON RESISTOR (CHIP)	0.00 63M J RECT.	チップ抵抗			01
R454	**RD45000R**	CARBON RESISTOR (CHIP)	0.00 63M J RECT.	チップ抵抗			01
RA4	**WH205600**	RESISTOR ARRAY	27 X 4	抵抗アレイ			
-11	**WH205600**	RESISTOR ARRAY	27 X 4	抵抗アレイ			
RA12	**WH209400**	RESISTOR ARRAY	1.0K X 4	抵抗アレイ			
RA15	**WH206200**	RESISTOR ARRAY	47 X 4	抵抗アレイ			01
RA19	**WH206200**	RESISTOR ARRAY	47 X 4	抵抗アレイ			01
-21	**WH206200**	RESISTOR ARRAY	47 X 4	抵抗アレイ			01
RA24	**WH206600**	RESISTOR ARRAY	68 X 4	抵抗アレイ			01
RA25	**WH206200**	RESISTOR ARRAY	47 X 4	抵抗アレイ			01
RA26	**WH206200**	RESISTOR ARRAY	47 X 4	抵抗アレイ			01
RA28	**WH213400**	RESISTOR ARRAY	47K X 4	抵抗アレイ			01
RA30	**WH213400**	RESISTOR ARRAY	47K X 4	抵抗アレイ			01
RA35	**WH211800**	RESISTOR ARRAY	10K X 4	抵抗アレイ			01
RA37	**WH213400**	RESISTOR ARRAY	47K X 4	抵抗アレイ			01
RA38	**WH211800**	RESISTOR ARRAY	10K X 4	抵抗アレイ			01
RA39	**WH211000**	RESISTOR ARRAY	4.7K X 4	抵抗アレイ			01
RA42	**WH205600**	RESISTOR ARRAY	27 X 4	抵抗アレイ			
RA43	**WH205600**	RESISTOR ARRAY	27 X 4	抵抗アレイ			
RA46	**WH205600**	RESISTOR ARRAY	27 X 4	抵抗アレイ			
-51	**WH205600**	RESISTOR ARRAY	27 X 4	抵抗アレイ			
RA52	**WH216700**	RESISTOR ARRAY	0 X 4	抵抗アレイ			01
RA53	**WH205600**	RESISTOR ARRAY	27 X 4	抵抗アレイ			
-55	**WH205600**	RESISTOR ARRAY	27 X 4	抵抗アレイ			
RA56	**WH206600**	RESISTOR ARRAY	68 X 4	抵抗アレイ			01
RA57	**WH205600**	RESISTOR ARRAY	27 X 4	抵抗アレイ			
-64	**WH205600**	RESISTOR ARRAY	27 X 4	抵抗アレイ			
RA304	**WH211800**	RESISTOR ARRAY	10K X 4	抵抗アレイ			01
-309	**WH211800**	RESISTOR ARRAY	10K X 4	抵抗アレイ			01
RA310	**WH206200**	RESISTOR ARRAY	47 X 4	抵抗アレイ			01
-313	**WH206200**	RESISTOR ARRAY	47 X 4	抵抗アレイ			01
RA318	**WH206600**	RESISTOR ARRAY	68 X 4	抵抗アレイ			01
-327	**WH206600**	RESISTOR ARRAY	68 X 4	抵抗アレイ			01
RA330	**WH206600**	RESISTOR ARRAY	68 X 4	抵抗アレイ			01
-335	**WH206600**	RESISTOR ARRAY	68 X 4	抵抗アレイ			01
RA338	**WH206600**	RESISTOR ARRAY	68 X 4	抵抗アレイ			01
X1	**WH521200**	QUARTZ CRYSTAL UNIT	48MHz SG-310SCF	水晶振動器			04
X1	**WM725500**	RESONATOR QUARTZ	48MHz DSO321SR	水晶発振器			
X2	**WM285200**	RESONATOR QUARTZ	16.000MHz DSX321G	水晶振動子			
X300	**WM135300**	RESONATOR QUARTZ	11.2896MHz DSX321G	水晶振動子			03
C1	**US625100**	CERAMIC CAPACITOR (CHIP)	0.100 10V K RECT.	チップセラ（BJ）			01
C2	**US625100**	CERAMIC CAPACITOR (CHIP)	0.100 10V K RECT.	チップセラ（BJ）			01
C4	**UF12847R**	ELECTROLYTIC CAPACITOR(CHIP)	470 10V	チップケミコン			02
C5	**UF12847R**	ELECTROLYTIC CAPACITOR(CHIP)	470 10V	チップケミコン			02
C6	**WG888300**	MONOLITHIC CERAMIC CAP(CHIP)	10.0 6.3V K TP	チップ積層セラコン			01
C7	**US625100**	CERAMIC CAPACITOR (CHIP)	0.100 10V K RECT.	チップセラ（BJ）			01
-11	**US625100**	CERAMIC CAPACITOR (CHIP)	0.100 10V K RECT.	チップセラ（BJ）			01
C13	**US625100**	CERAMIC CAPACITOR (CHIP)	0.100 10V K RECT.	チップセラ（BJ）			01
-16	**US625100**	CERAMIC CAPACITOR (CHIP)	0.100 10V K RECT.	チップセラ（BJ）			01
C18	**WG888300**	MONOLITHIC CERAMIC CAP(CHIP)	10.0 6.3V K TP	チップ積層セラコン			01
-20	**WG888300**	MONOLITHIC CERAMIC CAP(CHIP)	10.0 6.3V K TP	チップ積層セラコン			01
C21	**US634100**	CERAMIC CAPACITOR (CHIP)	0.010 16V K RECT.	チップセラ（B）			01
C22	**US625100**	CERAMIC CAPACITOR (CHIP)	0.100 10V K RECT.	チップセラ（BJ）			01
C24	**US625100**	CERAMIC CAPACITOR (CHIP)	0.100 10V K RECT.	チップセラ（BJ）			01
C25	**US625100**	CERAMIC CAPACITOR (CHIP)	0.100 10V K RECT.	チップセラ（BJ）			01
C27	**US625100**	CERAMIC CAPACITOR (CHIP)	0.100 10V K RECT.	チップセラ（BJ）			01
-29	**US625100**	CERAMIC CAPACITOR (CHIP)	0.100 10V K RECT.	チップセラ（BJ）			01
C30	**WG888300**	MONOLITHIC CERAMIC CAP(CHIP)	10.0 6.3V K TP	チップ積層セラコン			01
C34	**US625100**	CERAMIC CAPACITOR (CHIP)	0.100 10V K RECT.	チップセラ（BJ）			01
C37	**US625100**	CERAMIC CAPACITOR (CHIP)	0.100 10V K RECT.	チップセラ（BJ）			01
-42	**US625100**	CERAMIC CAPACITOR (CHIP)	0.100 10V K RECT.	チップセラ（BJ）			01
C44	**US625100**	CERAMIC CAPACITOR (CHIP)	0.100 10V K RECT.	チップセラ（BJ）			01
C45	**US625100**	CERAMIC CAPACITOR (CHIP)	0.100 10V K RECT.	チップセラ（BJ）			01
C47	**WG888300**	MONOLITHIC CERAMIC CAP(CHIP)	10.0 6.3V K TP	チップ積層セラコン			01
C48	**US625100**	CERAMIC CAPACITOR (CHIP)	0.100 10V K RECT.	チップセラ（BJ）			01
-50	**US625100**	CERAMIC CAPACITOR (CHIP)	0.100 10V K RECT.	チップセラ（BJ）			01
C55	**US625100**	CERAMIC CAPACITOR (CHIP)	0.100 10V K RECT.	チップセラ（BJ）			01
C71	**US625100**	CERAMIC CAPACITOR (CHIP)	0.100 10V K RECT.	チップセラ（BJ）			01
C72	**US625100**	CERAMIC CAPACITOR (CHIP)	0.100 10V K RECT.	チップセラ（BJ）			01
C75	**US625100**	CERAMIC CAPACITOR (CHIP)	0.100 10V K RECT.	チップセラ（BJ）			01

✻: New Parts

RANK: Japan only

DML

REF NO.	PART NO.	DESCRIPTION		部品名	REMARKS	QTY	RANK
C86	**US625100**	CERAMIC CAPACITOR (CHIP)	0.100 10V K RECT.	チップセラ（ＢＪ）			01
C89	**WG888300**	MONOLITHIC CERAMIC CAP(CHIP)	10.0 6.3V K TP	チップ積層セラコン			01
C99	**UF03810R**	ELECTROLYTIC CAPACITOR(CHIP)	100 16V	チップケミコン			01
C101	**US625100**	CERAMIC CAPACITOR (CHIP)	0.100 10V K RECT.	チップセラ（ＢＪ）			01
C116	**US625100**	CERAMIC CAPACITOR (CHIP)	0.100 10V K RECT.	チップセラ（ＢＪ）			01
C120	**UF03810R**	ELECTROLYTIC CAPACITOR(CHIP)	100 16V	チップケミコン			01
C122	**UF03810R**	ELECTROLYTIC CAPACITOR(CHIP)	100 16V	チップケミコン			01
C125	**US625100**	CERAMIC CAPACITOR (CHIP)	0.100 10V K RECT.	チップセラ（ＢＪ）			01
C300	**WG888300**	MONOLITHIC CERAMIC CAP(CHIP)	10.0 6.3V K TP	チップ積層セラコン			01
C301	**US625100**	CERAMIC CAPACITOR (CHIP)	0.100 10V K RECT.	チップセラ（ＢＪ）			01
C302	**US625100**	CERAMIC CAPACITOR (CHIP)	0.100 10V K RECT.	チップセラ（ＢＪ）			01
C304	**WG888300**	MONOLITHIC CERAMIC CAP(CHIP)	10.0 6.3V K TP	チップ積層セラコン			01
C307	**US625100**	CERAMIC CAPACITOR (CHIP)	0.100 10V K RECT.	チップセラ（ＢＪ）			01
C308	**WG888300**	MONOLITHIC CERAMIC CAP(CHIP)	10.0 6.3V K TP	チップ積層セラコン			01
C318	**US625100**	CERAMIC CAPACITOR (CHIP)	0.100 10V K RECT.	チップセラ（ＢＪ）			01
-321	**US625100**	CERAMIC CAPACITOR (CHIP)	0.100 10V K RECT.	チップセラ（ＢＪ）			01
C322	**WG888300**	MONOLITHIC CERAMIC CAP(CHIP)	10.0 6.3V K TP	チップ積層セラコン			01
C324	**WG888300**	MONOLITHIC CERAMIC CAP(CHIP)	10.0 6.3V K TP	チップ積層セラコン			01
C325	**US625100**	CERAMIC CAPACITOR (CHIP)	0.100 10V K RECT.	チップセラ（ＢＪ）			01
C328	**WG888300**	MONOLITHIC CERAMIC CAP(CHIP)	10.0 6.3V K TP	チップ積層セラコン			01
C329	**US625100**	CERAMIC CAPACITOR (CHIP)	0.100 10V K RECT.	チップセラ（ＢＪ）			01
-331	**US625100**	CERAMIC CAPACITOR (CHIP)	0.100 10V K RECT.	チップセラ（ＢＪ）			01
C334	**US625100**	CERAMIC CAPACITOR (CHIP)	0.100 10V K RECT.	チップセラ（ＢＪ）			01
C337	**US625100**	CERAMIC CAPACITOR (CHIP)	0.100 10V K RECT.	チップセラ（ＢＪ）			01
C338	**US625100**	CERAMIC CAPACITOR (CHIP)	0.100 10V K RECT.	チップセラ（ＢＪ）			01
C340	**US625100**	CERAMIC CAPACITOR (CHIP)	0.100 10V K RECT.	チップセラ（ＢＪ）			01
C342	**US625100**	CERAMIC CAPACITOR (CHIP)	0.100 10V K RECT.	チップセラ（ＢＪ）			01
-344	**US625100**	CERAMIC CAPACITOR (CHIP)	0.100 10V K RECT.	チップセラ（ＢＪ）			01
C348	**US625100**	CERAMIC CAPACITOR (CHIP)	0.100 10V K RECT.	チップセラ（ＢＪ）			01
C351	**US625100**	CERAMIC CAPACITOR (CHIP)	0.100 10V K RECT.	チップセラ（ＢＪ）			01
C353	**US625100**	CERAMIC CAPACITOR (CHIP)	0.100 10V K RECT.	チップセラ（ＢＪ）			01
-355	**US625100**	CERAMIC CAPACITOR (CHIP)	0.100 10V K RECT.	チップセラ（ＢＪ）			01
C358	**US625100**	CERAMIC CAPACITOR (CHIP)	0.100 10V K RECT.	チップセラ（ＢＪ）			01
C361	**US625100**	CERAMIC CAPACITOR (CHIP)	0.100 10V K RECT.	チップセラ（ＢＪ）			01
C363	**US625100**	CERAMIC CAPACITOR (CHIP)	0.100 10V K RECT.	チップセラ（ＢＪ）			01
C364	**US661220**	CERAMIC CAPACITOR (CHIP)	22P 50V J RECT.	チップセラ（ＣＨ）			
C365	**US661220**	CERAMIC CAPACITOR (CHIP)	22P 50V J RECT.	チップセラ（ＣＨ）			
C367	**US625100**	CERAMIC CAPACITOR (CHIP)	0.100 10V K RECT.	チップセラ（ＢＪ）			01
-369	**US625100**	CERAMIC CAPACITOR (CHIP)	0.100 10V K RECT.	チップセラ（ＢＪ）			01
C371	**US625100**	CERAMIC CAPACITOR (CHIP)	0.100 10V K RECT.	チップセラ（ＢＪ）			01
C376	**US625100**	CERAMIC CAPACITOR (CHIP)	0.100 10V K RECT.	チップセラ（ＢＪ）			01
-379	**US625100**	CERAMIC CAPACITOR (CHIP)	0.100 10V K RECT.	チップセラ（ＢＪ）			01
C384	**US625100**	CERAMIC CAPACITOR (CHIP)	0.100 10V K RECT.	チップセラ（ＢＪ）			01
-387	**US625100**	CERAMIC CAPACITOR (CHIP)	0.100 10V K RECT.	チップセラ（ＢＪ）			01
C389	**US625100**	CERAMIC CAPACITOR (CHIP)	0.100 10V K RECT.	チップセラ（ＢＪ）			01
-391	**US625100**	CERAMIC CAPACITOR (CHIP)	0.100 10V K RECT.	チップセラ（ＢＪ）			01
C393	**US625100**	CERAMIC CAPACITOR (CHIP)	0.100 10V K RECT.	チップセラ（ＢＪ）			01
C397	**US625100**	CERAMIC CAPACITOR (CHIP)	0.100 10V K RECT.	チップセラ（ＢＪ）			01
C398	**WG888300**	MONOLITHIC CERAMIC CAP(CHIP)	10.0 6.3V K TP	チップ積層セラコン			01
C418	**WG888300**	MONOLITHIC CERAMIC CAP(CHIP)	10.0 6.3V K TP	チップ積層セラコン			01
C421	**US625100**	CERAMIC CAPACITOR (CHIP)	0.100 10V K RECT.	チップセラ（ＢＪ）			01
C425	**UF037100**	ELECTROLYTIC CAPACITOR(CHIP)	10 16V	チップケミコン			01
-428	**UF037100**	ELECTROLYTIC CAPACITOR(CHIP)	10 16V	チップケミコン			01
C436	**US625100**	CERAMIC CAPACITOR (CHIP)	0.100 10V K RECT.	チップセラ（ＢＪ）			01
C437	**US625100**	CERAMIC CAPACITOR (CHIP)	0.100 10V K RECT.	チップセラ（ＢＪ）			01
C448	**UF03747R**	ELECTROLYTIC CAPACITOR(CHIP)	47 16V	チップケミコン			01
C449	**UF03747R**	ELECTROLYTIC CAPACITOR(CHIP)	47 16V	チップケミコン			01
C466	**UF03810R**	ELECTROLYTIC CAPACITOR(CHIP)	100 16V	チップケミコン			01
C468	**US625100**	CERAMIC CAPACITOR (CHIP)	0.100 10V K RECT.	チップセラ（ＢＪ）			01
C469	**UF037100**	ELECTROLYTIC CAPACITOR(CHIP)	10 16V	チップケミコン			01
C471	**UF03810R**	ELECTROLYTIC CAPACITOR(CHIP)	100 16V	チップケミコン			01
C473	**US635100**	CERAMIC CAPACITOR (CHIP)	0.100 16V Z RECT.	チップセラ（Ｆ）			01
C474	**UF03810R**	ELECTROLYTIC CAPACITOR(CHIP)	100 16V	チップケミコン			01
C703	**US625100**	CERAMIC CAPACITOR (CHIP)	0.100 10V K RECT.	チップセラ（ＢＪ）			01
C706	**US625100**	CERAMIC CAPACITOR (CHIP)	0.100 10V K RECT.	チップセラ（ＢＪ）			01
C709	**US625100**	CERAMIC CAPACITOR (CHIP)	0.100 10V K RECT.	チップセラ（ＢＪ）			01
-711	**US625100**	CERAMIC CAPACITOR (CHIP)	0.100 10V K RECT.	チップセラ（ＢＪ）			01
C717	**US625100**	CERAMIC CAPACITOR (CHIP)	0.100 10V K RECT.	チップセラ（ＢＪ）			01
C719	**US625100**	CERAMIC CAPACITOR (CHIP)	0.100 10V K RECT.	チップセラ（ＢＪ）			01
-722	**US625100**	CERAMIC CAPACITOR (CHIP)	0.100 10V K RECT.	チップセラ（ＢＪ）			01

✻: New Parts

RANK: Japan only

DML

	REF NO.	PART NO.	DESCRIPTION		部品名	REMARKS	QTY	RANK
	C764	**US625100**	CERAMIC CAPACITOR (CHIP)	0.100 10V K RECT.	チップセラ（BJ）			01
	C768	**US625100**	CERAMIC CAPACITOR (CHIP)	0.100 10V K RECT.	チップセラ（BJ）			01
	C769	**US625100**	CERAMIC CAPACITOR (CHIP)	0.100 10V K RECT.	チップセラ（BJ）			01
	C797	**US625100**	CERAMIC CAPACITOR (CHIP)	0.100 10V K RECT.	チップセラ（BJ）			01
	CN1	**VT388600**	CONNECTOR	PH 5P TE	ベース付ポスト			01
	CN2	**VT388500**	CONNECTOR	PH 4P TE	ベース付ポスト			01
	CN4	**WC19940R**	FFC/FPC CONNECTOR	52808 19P TE	FFC／FPCコネクタ			01
	CN5	**WB560300**	CONNECTOR	ZH 8P TE	ベースピン			
	CN6	**WB560200**	CONNECTOR	ZH 7P TE	ベースピン			01
	CN7	**VT388600**	CONNECTOR	PH 5P TE	ベース付ポスト			01
	CN8	**VT388700**	CONNECTOR	PH 6P TE	ベース付ポスト			01
	CN9	**WB560800**	CONNECTOR	ZH 13P TE	ベースピン			02
	CN10	**VT388400**	CONNECTOR	PH 3P TE	ベース付ポスト			01
	CN400	**WB560400**	CONNECTOR	ZH 9P TE	ベースピン			01
	D1	**VT53250R**	DIODE	1SR154-400 TE-25	ダイオード			01
	D300	**VT53250R**	DIODE	1SR154-400 TE-25	ダイオード			01
	D400	**VT53250R**	DIODE	1SR154-400 TE-25	ダイオード			01
	DA1	**V9424900**	DIODE ARRAY	1SS372 TE85L	ダイオードアレイ			01
	-4	**V9424900**	DIODE ARRAY	1SS372 TE85L	ダイオードアレイ			01
	IC1	**X6688A0R**	IC	SN74LV14APWR	IC	INVERTER		01
	IC2	**X3584E00**	IC	W9812G6JH-6	IC	SDRAM 128M		04
	IC2	**X6970C00**	IC	M12L128168A-7TG2T	IC			04
	IC2	**X6970D00**	IC	M12L128168A-7TG2L	IC			
	IC4	**X9460A00**	IC	R1172H181B-T1-F	IC	REGULATOR +1.8V		03
	IC5	**X9347A00**	IC	R3112N291A-TR-F	IC	VOLTAGE DETECTOR		01
	IC6	**X3584E00**	IC	W9812G6JH-6	IC	SDRAM 128M		04
	IC6	**X6970C00**	IC	M12L128168A-7TG2T	IC			04
	IC6	**X6970D00**	IC	M12L128168A-7TG2L	IC			
	IC7	**X6688A0R**	IC	SN74LV14APWR	IC	INVERTER		01
	IC8	**XW633A0R**	IC	TC7SH32FU(TE85L,JF)	IC	OR GATE		01
	IC9	**X5542A00**	IC	TC74VHC21FT(EL)	IC	AND		01
	IC11	**X5535A00**	IC	SN74LV175APWR	IC	D-FF		01
*	IC19	**YD595B00**	IC	S29GL256P90TFCR20	IC	FLASH ROM 256M PROGRAM		
*	IC20	**YD861A00**	IC	EN29LV640AB-90TIP	IC	FLASH ROM 64M PROGRAM/DATA		
	IC300	**X9293A00**	IC	R1172H151D-T1-F	IC	REGULATOR +1.5V		01
*	IC302	**YD848A00**	IC	S29GL01GP11TFCR20	IC	FLASH ROM 1G WAVE H		
*	IC302	**YD862A00**	IC	JS28F00AM29EWL	IC			
	IC305	**X5665B01**	IC	M12L64164A-7TG	IC	SDRAM 64M		07
	IC305	**X5665C00**	IC	M12L64164A-7TG2M	IC			03
	IC305	**XZ414F00**	IC	W9864G6JH-6	IC			03
	IC306	**XY806A0R**	IC	TC7WH14FU(TE12L,F)	IC	INVERTER		02
	IC307	**X5535A00**	IC	SN74LV175APWR	IC	D-FF		01
	IC308	**XR680A00**	IC	TC7SH08FU(TE85L,JF)	IC	AND GATE		01
*	IC309	**YD849A00**	IC	S29GL01GP11TFCR20	IC	FLASH ROM 1G WAVE L		
*	IC309	**YD863A00**	IC	JS28F00AM29EWL	IC			
	IC401	**X6040A01**	IC	AK4385ET	IC	DAC		03
	IC406	**XS534A00**	IC	NJM78M05DL1A	IC	REGULATOR +5V		02
	L48	**WE863900**	COMMON MODE COIL	DLP11SN900HL2L	コモンモードコイル			01
	L49	**WE863900**	COMMON MODE COIL	DLP11SN900HL2L	コモンモードコイル			01
	R1	**RD456100**	CARBON RESISTOR (CHIP)	1.0K 63M J RECT.	チップ抵抗			01
	R5	**RD455100**	CARBON RESISTOR (CHIP)	100.0 63M J RECT.	チップ抵抗			01
	R9	**RD457100**	CARBON RESISTOR (CHIP)	10.0K 63M J RECT.	チップ抵抗			01
	R15	**RD454330**	CARBON RESISTOR (CHIP)	33.0 63M J RECT.	チップ抵抗			01
	-17	**RD454330**	CARBON RESISTOR (CHIP)	33.0 63M J RECT.	チップ抵抗			01
	R23	**RD455100**	CARBON RESISTOR (CHIP)	100.0 63M J RECT.	チップ抵抗			01
	R38	**RD45000R**	CARBON RESISTOR (CHIP)	0.00 63M J RECT.	チップ抵抗			01
	R46	**RD454680**	CARBON RESISTOR (CHIP)	68.0 63M J RECT.	チップ抵抗			01
	R47	**RD454680**	CARBON RESISTOR (CHIP)	68.0 63M J RECT.	チップ抵抗			01
	R70	**RD454680**	CARBON RESISTOR (CHIP)	68.0 63M J RECT.	チップ抵抗			01
	R71	**RD454680**	CARBON RESISTOR (CHIP)	68.0 63M J RECT.	チップ抵抗			01
	R75	**RD455100**	CARBON RESISTOR (CHIP)	100.0 63M J RECT.	チップ抵抗			01
	R79	**RD455100**	CARBON RESISTOR (CHIP)	100.0 63M J RECT.	チップ抵抗			01
	R80	**RD454680**	CARBON RESISTOR (CHIP)	68.0 63M J RECT.	チップ抵抗			01
	R84	**RD45000R**	CARBON RESISTOR (CHIP)	0.00 63M J RECT.	チップ抵抗			01
	R88	**RD455680**	CARBON RESISTOR (CHIP)	680.0 63M J RECT.	チップ抵抗			01
	R89	**RD454680**	CARBON RESISTOR (CHIP)	68.0 63M J RECT.	チップ抵抗			01
	R90	**RD454680**	CARBON RESISTOR (CHIP)	68.0 63M J RECT.	チップ抵抗			01
	R94	**RD458470**	CARBON RESISTOR (CHIP)	470.0K 63M J RECT.	チップ抵抗			
	R95	**RD458470**	CARBON RESISTOR (CHIP)	470.0K 63M J RECT.	チップ抵抗			
	R96	**RD45522R**	CARBON RESISTOR (CHIP)	220.0 63M J RECT.	チップ抵抗			01

*: New Parts

RANK: Japan only

DML and EIF/ENC/OR/PNCA/PNCB

	REF NO.	PART NO.	DESCRIPTION		部品名	REMARKS	QTY	RANK
	R99	**RD457150**	CARBON RESISTOR (CHIP)	15.0K 63M J RECT.	チップ抵抗			01
	R107	**RD457150**	CARBON RESISTOR (CHIP)	15.0K 63M J RECT.	チップ抵抗			01
	R118	**RD45615R**	CARBON RESISTOR (CHIP)	1.5K 63M J RECT.	チップ抵抗			01
	R121	**RD45427R**	CARBON RESISTOR (CHIP)	27.0 63M J RECT.	チップ抵抗			01
	-124	**RD45427R**	CARBON RESISTOR (CHIP)	27.0 63M J RECT.	チップ抵抗			01
	R129	**RD455680**	CARBON RESISTOR (CHIP)	680.0 63M J RECT.	チップ抵抗			01
	R130	**RD454680**	CARBON RESISTOR (CHIP)	68.0 63M J RECT.	チップ抵抗			01
	R131	**RD45427R**	CARBON RESISTOR (CHIP)	27.0 63M J RECT.	チップ抵抗			01
	-133	**RD45427R**	CARBON RESISTOR (CHIP)	27.0 63M J RECT.	チップ抵抗			01
	R138	**RD456680**	CARBON RESISTOR (CHIP)	6.8K 63M J RECT.	チップ抵抗			01
	-144	**RD456680**	CARBON RESISTOR (CHIP)	6.8K 63M J RECT.	チップ抵抗			01
	R317	**RD45427R**	CARBON RESISTOR (CHIP)	27.0 63M J RECT.	チップ抵抗			01
	R340	**RD45427R**	CARBON RESISTOR (CHIP)	27.0 63M J RECT.	チップ抵抗			01
	R342	**RD454470**	CARBON RESISTOR (CHIP)	47.0 63M J RECT.	チップ抵抗			01
	R343	**RD454680**	CARBON RESISTOR (CHIP)	68.0 63M J RECT.	チップ抵抗			01
	R345	**RD45427R**	CARBON RESISTOR (CHIP)	27.0 63M J RECT.	チップ抵抗			01
	R400	**RD45427R**	CARBON RESISTOR (CHIP)	27.0 63M J RECT.	チップ抵抗			01
	R401	**RD45427R**	CARBON RESISTOR (CHIP)	27.0 63M J RECT.	チップ抵抗			01
	R440	**RD455100**	CARBON RESISTOR (CHIP)	100.0 63M J RECT.	チップ抵抗			01
	R441	**RD455100**	CARBON RESISTOR (CHIP)	100.0 63M J RECT.	チップ抵抗			01
	RA2	**WH206600**	RESISTOR ARRAY	68 X 4	抵抗アレイ			01
	RA3	**WH206600**	RESISTOR ARRAY	68 X 4	抵抗アレイ			01
	RA17	**WH206600**	RESISTOR ARRAY	68 X 4	抵抗アレイ			01
	RA18	**WH206600**	RESISTOR ARRAY	68 X 4	抵抗アレイ			01
	RA22	**WH206600**	RESISTOR ARRAY	68 X 4	抵抗アレイ			01
	RA23	**WH206600**	RESISTOR ARRAY	68 X 4	抵抗アレイ			01
	RA27	**WH206200**	RESISTOR ARRAY	47 X 4	抵抗アレイ			01
	RA29	**WH206200**	RESISTOR ARRAY	47 X 4	抵抗アレイ			01
	RA31	**WH206200**	RESISTOR ARRAY	47 X 4	抵抗アレイ			01
	RA32	**WH206600**	RESISTOR ARRAY	68 X 4	抵抗アレイ			01
	RA33	**WH206600**	RESISTOR ARRAY	68 X 4	抵抗アレイ			01
	RA34	**WH213400**	RESISTOR ARRAY	47K X 4	抵抗アレイ			01
	RA68	**WH206600**	RESISTOR ARRAY	68 X 4	抵抗アレイ			01
	-73	**WH206600**	RESISTOR ARRAY	68 X 4	抵抗アレイ			01
	RA77	**WH206600**	RESISTOR ARRAY	68 X 4	抵抗アレイ			01
	-81	**WH206600**	RESISTOR ARRAY	68 X 4	抵抗アレイ			01
	RA94	**WH205600**	RESISTOR ARRAY	27 X 4	抵抗アレイ			
	-97	**WH205600**	RESISTOR ARRAY	27 X 4	抵抗アレイ			
	RA98	**WH206600**	RESISTOR ARRAY	68 X 4	抵抗アレイ			01
	-101	**WH206600**	RESISTOR ARRAY	68 X 4	抵抗アレイ			01
	RA102	**WH206200**	RESISTOR ARRAY	47 X 4	抵抗アレイ			01
	RA103	**WH206200**	RESISTOR ARRAY	47 X 4	抵抗アレイ			01
	RA314	**WH206600**	RESISTOR ARRAY	68 X 4	抵抗アレイ			01
	-317	**WH206600**	RESISTOR ARRAY	68 X 4	抵抗アレイ			01
	RA328	**WH207000**	RESISTOR ARRAY	100 X 4	抵抗アレイ			01
	RA329	**WH207000**	RESISTOR ARRAY	100 X 4	抵抗アレイ			01
	RA336	**WH207000**	RESISTOR ARRAY	100 X 4	抵抗アレイ			01
	RA337	**WH207000**	RESISTOR ARRAY	100 X 4	抵抗アレイ			01
	RA339	**WH206600**	RESISTOR ARRAY	68 X 4	抵抗アレイ			01
	-342	**WH206600**	RESISTOR ARRAY	68 X 4	抵抗アレイ			01
*		**WW422900**	CIRCUIT BOARD	EIF	EIFシート	(WW42170)(YD222A0)		
*		**WW422800**	CIRCUIT BOARD	ENC	ENCシート	(WW42170)(YD222A0)		
*		**WW422400**	CIRCUIT BOARD	OR	ORシート	(WW42170)(YD222A0)		
*		**WW422700**	CIRCUIT BOARD	PNCA	PNCAシート	(WW42170)(YD222A0)		
*		**WW422600**	CIRCUIT BOARD	PNCB	PNCBシート	(WW42170)(YD222A0)		
	C001	**US14510R**	CERAMIC CAPACITOR (CHIP)	0.1000 25V Z RECT.	チップセラ（F）			01
	C002	**US14510R**	CERAMIC CAPACITOR (CHIP)	0.1000 25V Z RECT.	チップセラ（F）			01
	C201	**US14510R**	CERAMIC CAPACITOR (CHIP)	0.1000 25V Z RECT.	チップセラ（F）			01
	-206	**US14510R**	CERAMIC CAPACITOR (CHIP)	0.1000 25V Z RECT.	チップセラ（F）			01
	C226	**US14510R**	CERAMIC CAPACITOR (CHIP)	0.1000 25V Z RECT.	チップセラ（F）			01
	C230	**US063100**	CERAMIC CAPACITOR (CHIP)	1000P 50V K RECT.	チップセラ（B）			01
	C244	**US062470**	CERAMIC CAPACITOR (CHIP)	470P 50V J RECT.	チップセラ（SL）			01
	C245	**US062470**	CERAMIC CAPACITOR (CHIP)	470P 50V J RECT.	チップセラ（SL）			01
	C250	**US062470**	CERAMIC CAPACITOR (CHIP)	470P 50V J RECT.	チップセラ（SL）			01
	C252	**US062470**	CERAMIC CAPACITOR (CHIP)	470P 50V J RECT.	チップセラ（SL）			01
	C253	**US062470**	CERAMIC CAPACITOR (CHIP)	470P 50V J RECT.	チップセラ（SL）			01
	C262	**US062470**	CERAMIC CAPACITOR (CHIP)	470P 50V J RECT.	チップセラ（SL）			01
	C263	**US14510R**	CERAMIC CAPACITOR (CHIP)	0.1000 25V Z RECT.	チップセラ（F）			01
	C264	**US062470**	CERAMIC CAPACITOR (CHIP)	470P 50V J RECT.	チップセラ（SL）			01

*: New Parts

RANK: Japan only

EIF/ENC/OR/PNCA/PNCB

REF NO.	PART NO.	DESCRIPTION		部品名	REMARKS	QTY	RANK
C269	**US14510R**	CERAMIC CAPACITOR (CHIP)	0.1000 25V Z RECT.	チップセラ（F）			01
C270	**US061470**	CERAMIC CAPACITOR (CHIP)	47P 50V J RECT.	チップセラ（CH）			01
C272	**US061470**	CERAMIC CAPACITOR (CHIP)	47P 50V J RECT.	チップセラ（CH）			01
C274	**US061470**	CERAMIC CAPACITOR (CHIP)	47P 50V J RECT.	チップセラ（CH）			01
C276	**US061180**	CERAMIC CAPACITOR (CHIP)	18P 50V J RECT.	チップセラ（CH）			01
C277	**US061470**	CERAMIC CAPACITOR (CHIP)	47P 50V J RECT.	チップセラ（CH）			01
C279	**US14510R**	CERAMIC CAPACITOR (CHIP)	0.1000 25V Z RECT.	チップセラ（F）			01
C281	**US14510R**	CERAMIC CAPACITOR (CHIP)	0.1000 25V Z RECT.	チップセラ（F）			01
CN001	**V9335000**	FFC/FPC CONNECTOR	52808 21P TE	FFC／FPCコネクタ			01
CN002	**WC195100**	FFC/FPC CONNECTOR	52808 13P TE	FFC／FPCコネクタ			
CN101	**WC195100**	FFC/FPC CONNECTOR	52808 13P TE	FFC／FPCコネクタ			
CN201	**VT388700**	CONNECTOR	PH 6P TE	ベース付ポスト			01
CN202	**WC194500**	FFC/FPC CONNECTOR	52808 6P TE	FFC／FPCコネクタ			01
CN204	**WC19960R**	FFC/FPC CONNECTOR	52808 23P TE	FFC／FPCコネクタ			02
CN205	**V9335000**	FFC/FPC CONNECTOR	52808 21P TE	FFC／FPCコネクタ			01
CN206	**V647890R**	FFC/FPC CONNECTOR	52808 26P TE	FFC／FPCコネクタ			01
CN207	**WC19940R**	FFC/FPC CONNECTOR	52808 19P TE	FFC／FPCコネクタ			01
CN208	**V729460R**	FFC/FPC CONNECTOR	52559 20P TE	FFC／FPCコネクタ			02
CN209	**WB560300**	CONNECTOR	ZH 8P TE	ベースピン			
CN401	**VT388400**	CONNECTOR	PH 3P TE	ベース付ポスト			01
CN901	**WC195200**	FFC/FPC CONNECTOR	52808 14P TE	FFC／FPCコネクタ			01
D001	**WG139300**	DIODE	KDS4148U-RTK/P TE	ダイオード			
-036	**WG139300**	DIODE	KDS4148U-RTK/P TE	ダイオード			
D101	**WG139300**	DIODE	KDS4148U-RTK/P TE	ダイオード			
-112	**WG139300**	DIODE	KDS4148U-RTK/P TE	ダイオード			
D901	**VT332900**	DIODE	1SS355 TE-17 TP	ダイオード			01
-919	**VT332900**	DIODE	1SS355 TE-17 TP	ダイオード			01
D901	**WG139300**	DIODE	KDS4148U-RTK/P TE	ダイオード			
-919	**WG139300**	DIODE	KDS4148U-RTK/P TE	ダイオード			
EM001	**WE05620R**	EMI FILTER (CHIP)	NFM21PC105B1A3D	エミフィルチップ			01
IC204	**X6789A0R**	IC	DS90LV012ATMF/NOPB	IC	LVDS RECEIVER		05
L201	**WE05620R**	EMI FILTER (CHIP)	NFM21PC105B1A3D	エミフィルチップ			01
L204	**WE05620R**	EMI FILTER (CHIP)	NFM21PC105B1A3D	エミフィルチップ			01
L210	**VY65720R**	CHIP INDUCTANCE	600 BK1608HM601-T	チップインダクタ			01
R001	**RD35718R**	CARBON RESISTOR (CHIP)	18.0K 63M J RECT.	チップ抵抗			01
R002	**RD357270**	CARBON RESISTOR (CHIP)	27.0K 63M J RECT.	チップ抵抗			01
R003	**RD350001**	CARBON RESISTOR (CHIP)	0 63M J RECT.	チップ抵抗			01
R004	**RD150000**	CARBON RESISTOR (CHIP)	0.0 1/4 J TP	チップ抵抗			01
R101	**RD35456R**	CARBON RESISTOR (CHIP)	56.0 63M J RECT.	チップ抵抗			01
R102	**RD355100**	CARBON RESISTOR (CHIP)	100.0 63M J RECT.	チップ抵抗			01
R103	**RD35456R**	CARBON RESISTOR (CHIP)	56.0 63M J RECT.	チップ抵抗			01
R104	**RD355100**	CARBON RESISTOR (CHIP)	100.0 63M J RECT.	チップ抵抗			01
R105	**RD35456R**	CARBON RESISTOR (CHIP)	56.0 63M J RECT.	チップ抵抗			01
R106	**RD355100**	CARBON RESISTOR (CHIP)	100.0 63M J RECT.	チップ抵抗			01
R107	**RD35456R**	CARBON RESISTOR (CHIP)	56.0 63M J RECT.	チップ抵抗			01
R108	**RD355100**	CARBON RESISTOR (CHIP)	100.0 63M J RECT.	チップ抵抗			01
R109	**RD35456R**	CARBON RESISTOR (CHIP)	56.0 63M J RECT.	チップ抵抗			01
R110	**RD355100**	CARBON RESISTOR (CHIP)	100.0 63M J RECT.	チップ抵抗			01
R111	**RD35456R**	CARBON RESISTOR (CHIP)	56.0 63M J RECT.	チップ抵抗			01
R112	**RD355100**	CARBON RESISTOR (CHIP)	100.0 63M J RECT.	チップ抵抗			01
R113	**RD35456R**	CARBON RESISTOR (CHIP)	56.0 63M J RECT.	チップ抵抗			01
R114	**RD355100**	CARBON RESISTOR (CHIP)	100.0 63M J RECT.	チップ抵抗			01
R115	**RD35456R**	CARBON RESISTOR (CHIP)	56.0 63M J RECT.	チップ抵抗			01
R116	**RD355100**	CARBON RESISTOR (CHIP)	100.0 63M J RECT.	チップ抵抗			01
R239	**RD357100**	CARBON RESISTOR (CHIP)	10.0K 63M J RECT.	チップ抵抗			01
R243	**RD355330**	CARBON RESISTOR (CHIP)	330.0 63M J RECT.	チップ抵抗			01
R247	**RD354680**	CARBON RESISTOR (CHIP)	68.0 63M J RECT.	チップ抵抗			01
R249	**RD35422R**	CARBON RESISTOR (CHIP)	22.0 63M J RECT.	チップ抵抗			01
-251	**RD35422R**	CARBON RESISTOR (CHIP)	22.0 63M J RECT.	チップ抵抗			01
R252	**RD355150**	CARBON RESISTOR (CHIP)	150.0 63M J RECT.	チップ抵抗			01
-255	**RD355150**	CARBON RESISTOR (CHIP)	150.0 63M J RECT.	チップ抵抗			01
R257	**RD354470**	CARBON RESISTOR (CHIP)	47.0 63M J RECT.	チップ抵抗			01
R258	**RD354470**	CARBON RESISTOR (CHIP)	47.0 63M J RECT.	チップ抵抗			01
C207	**US062470**	CERAMIC CAPACITOR (CHIP)	470P 50V J RECT.	チップセラ（SL）			01
-223	**US062470**	CERAMIC CAPACITOR (CHIP)	470P 50V J RECT.	チップセラ（SL）			01
C224	**UF12847R**	ELECTROLYTIC CAPACITOR(CHIP)	470 10V	チップケミコン			02
C225	**UF12847R**	ELECTROLYTIC CAPACITOR(CHIP)	470 10V	チップケミコン			02
C227	**US14510R**	CERAMIC CAPACITOR (CHIP)	0.1000 25V Z RECT.	チップセラ（F）			01
C228	**US14510R**	CERAMIC CAPACITOR (CHIP)	0.1000 25V Z RECT.	チップセラ（F）			01
C231	**US14510R**	CERAMIC CAPACITOR (CHIP)	0.1000 25V Z RECT.	チップセラ（F）			01

✻: New Parts

RANK: Japan only

EIF/ENC/OR/PNCA/PNCB

REF NO.	PART NO.	DESCRIPTION		部品名	REMARKS	QTY	RANK
C232	**US064100**	CERAMIC CAPACITOR (CHIP)	0.0100 50V K RECT.	チップセラ（B）			01
C233	**US14510R**	CERAMIC CAPACITOR (CHIP)	0.1000 25V Z RECT.	チップセラ（F）			01
C234	**US062470**	CERAMIC CAPACITOR (CHIP)	470P 50V J RECT.	チップセラ（SL）			01
-243	**US062470**	CERAMIC CAPACITOR (CHIP)	470P 50V J RECT.	チップセラ（SL）			01
C246	**US062470**	CERAMIC CAPACITOR (CHIP)	470P 50V J RECT.	チップセラ（SL）			01
-249	**US062470**	CERAMIC CAPACITOR (CHIP)	470P 50V J RECT.	チップセラ（SL）			01
C255	**US14510R**	CERAMIC CAPACITOR (CHIP)	0.1000 25V Z RECT.	チップセラ（F）			01
C256	**UF03810R**	ELECTROLYTIC CAPACITOR(CHIP)	100 16V	チップケミコン			01
C257	**UF12822R**	ELECTROLYTIC CAPACITOR(CHIP)	220 10V	チップケミコン			01
C258	**UF12822R**	ELECTROLYTIC CAPACITOR(CHIP)	220 10V	チップケミコン			01
C259	**US14510R**	CERAMIC CAPACITOR (CHIP)	0.1000 25V Z RECT.	チップセラ（F）			01
C261	**US14510R**	CERAMIC CAPACITOR (CHIP)	0.1000 25V Z RECT.	チップセラ（F）			01
C265	**US14510R**	CERAMIC CAPACITOR (CHIP)	0.1000 25V Z RECT.	チップセラ（F）			01
C280	**US14510R**	CERAMIC CAPACITOR (CHIP)	0.1000 25V Z RECT.	チップセラ（F）			01
C282	**UF03810R**	ELECTROLYTIC CAPACITOR(CHIP)	100 16V	チップケミコン			01
C284	**UF03810R**	ELECTROLYTIC CAPACITOR(CHIP)	100 16V	チップケミコン			01
C285	**US14510R**	CERAMIC CAPACITOR (CHIP)	0.1000 25V Z RECT.	チップセラ（F）			01
C286	**US14510R**	CERAMIC CAPACITOR (CHIP)	0.1000 25V Z RECT.	チップセラ（F）			01
D201	**WG139300**	DIODE	KDS4148U-RTK/P TE	ダイオード			
-210	**WG139300**	DIODE	KDS4148U-RTK/P TE	ダイオード			
EC401	**VU48130R**	ENCODER	REB161(9X5)PVB15FH	16形エンコーダ	DATA ENTRY		03
IC201	**X4406101**	IC	M38044M4-C16FPU0	IC	LED DRIVER/SWITCH SCAN		07
L205	**VY65720R**	CHIP INDUCTANCE	600 BK1608HM601-T	チップインダクタ			01
L206	**VY65720R**	CHIP INDUCTANCE	600 BK1608HM601-T	チップインダクタ			01
LD001	**WJ491700**	LED (CHIP) AMBER	BL-HJF36J-TRB	チップLED	USB		01
LD101	**WJ491700**	LED (CHIP) AMBER	BL-HJF36J-TRB	チップLED	FREEZE		01
LD102	**WJ491600**	LED (CHIP) AMBER/Y.GREEN	BL-HJFGE36J-TRB	チップ2色LED	1 (REGISTRATION MEMORY)		01
LD103	**WJ491600**	LED (CHIP) AMBER/Y.GREEN	BL-HJFGE36J-TRB	チップ2色LED	2 (REGISTRATION MEMORY)		01
LD104	**WJ491600**	LED (CHIP) AMBER/Y.GREEN	BL-HJFGE36J-TRB	チップ2色LED	3 (REGISTRATION MEMORY)		01
LD105	**WJ491600**	LED (CHIP) AMBER/Y.GREEN	BL-HJFGE36J-TRB	チップ2色LED	4 (REGISTRATION MEMORY)		01
LD106	**WJ491600**	LED (CHIP) AMBER/Y.GREEN	BL-HJFGE36J-TRB	チップ2色LED	5 (REGISTRATION MEMORY)		01
LD107	**WJ491600**	LED (CHIP) AMBER/Y.GREEN	BL-HJFGE36J-TRB	チップ2色LED	6 (REGISTRATION MEMORY)		01
LD108	**WJ491600**	LED (CHIP) AMBER/Y.GREEN	BL-HJFGE36J-TRB	チップ2色LED	7 (REGISTRATION MEMORY)		01
LD109	**WJ491600**	LED (CHIP) AMBER/Y.GREEN	BL-HJFGE36J-TRB	チップ2色LED	8 (REGISTRATION MEMORY)		01
LD901	**WJ491700**	LED (CHIP) AMBER	BL-HJF36J-TRB	チップLED	C# (SCALE SETTING)		01
LD902	**WJ491700**	LED (CHIP) AMBER	BL-HJF36J-TRB	チップLED	D# (SCALE SETTING)		01
LD903	**WJ491700**	LED (CHIP) AMBER	BL-HJF36J-TRB	チップLED	F# (SCALE SETTING)		01
LD904	**WJ491700**	LED (CHIP) AMBER	BL-HJF36J-TRB	チップLED	G# (SCALE SETTING)		01
LD905	**WJ491700**	LED (CHIP) AMBER	BL-HJF36J-TRB	チップLED	A# (SCALE SETTING)		01
LD906	**WJ491700**	LED (CHIP) AMBER	BL-HJF36J-TRB	チップLED	C (SCALE SETTING)		01
LD907	**WJ491700**	LED (CHIP) AMBER	BL-HJF36J-TRB	チップLED	D (SCALE SETTING)		01
LD908	**WJ491700**	LED (CHIP) AMBER	BL-HJF36J-TRB	チップLED	E (SCALE SETTING)		01
LD909	**WJ491700**	LED (CHIP) AMBER	BL-HJF36J-TRB	チップLED	F (SCALE SETTING)		01
LD910	**WJ491700**	LED (CHIP) AMBER	BL-HJF36J-TRB	チップLED	G (SCALE SETTING)		01
LD911	**WJ491700**	LED (CHIP) AMBER	BL-HJF36J-TRB	チップLED	A (SCALE SETTING)		01
LD912	**WJ491700**	LED (CHIP) AMBER	BL-HJF36J-TRB	チップLED	B (SCALE SETTING)		01
LD913	**WJ491700**	LED (CHIP) AMBER	BL-HJF36J-TRB	チップLED	1 (SCALE MEMORY)		01
LD914	**WJ491700**	LED (CHIP) AMBER	BL-HJF36J-TRB	チップLED	2 (SCALE MEMORY)		01
LD915	**WJ491700**	LED (CHIP) AMBER	BL-HJF36J-TRB	チップLED	3 (SCALE MEMORY)		01
LD916	**WJ491700**	LED (CHIP) AMBER	BL-HJF36J-TRB	チップLED	4 (SCALE MEMORY)		01
LD917	**WJ491700**	LED (CHIP) AMBER	BL-HJF36J-TRB	チップLED	5 (SCALE MEMORY)		01
LD918	**WJ491700**	LED (CHIP) AMBER	BL-HJF36J-TRB	チップLED	RESET (SCALE MEMORY)		01
R201	**RD356100**	CARBON RESISTOR (CHIP)	1.0K 63M J RECT.	チップ抵抗			01
R202	**RD356100**	CARBON RESISTOR (CHIP)	1.0K 63M J RECT.	チップ抵抗			01
R204	**RD154560**	CARBON RESISTOR (CHIP)	56.0 1/4 J TP	チップ抵抗			01
R205	**RD15515R**	CARBON RESISTOR (CHIP)	150.0 1/4 J TP	チップ抵抗			
-209	**RD15515R**	CARBON RESISTOR (CHIP)	150.0 1/4 J TP	チップ抵抗			
R210	**RD154560**	CARBON RESISTOR (CHIP)	56.0 1/4 J TP	チップ抵抗			01
-214	**RD154560**	CARBON RESISTOR (CHIP)	56.0 1/4 J TP	チップ抵抗			01
R215	**RD15515R**	CARBON RESISTOR (CHIP)	150.0 1/4 J TP	チップ抵抗			
R216	**RD15515R**	CARBON RESISTOR (CHIP)	150.0 1/4 J TP	チップ抵抗			
R217	**RD154560**	CARBON RESISTOR (CHIP)	56.0 1/4 J TP	チップ抵抗			01
R218	**RD15515R**	CARBON RESISTOR (CHIP)	150.0 1/4 J TP	チップ抵抗			
R219	**RD15515R**	CARBON RESISTOR (CHIP)	150.0 1/4 J TP	チップ抵抗			
R220	**RD154560**	CARBON RESISTOR (CHIP)	56.0 1/4 J TP	チップ抵抗			01
R221	**RD357100**	CARBON RESISTOR (CHIP)	10.0K 63M J RECT.	チップ抵抗			01
-230	**RD357100**	CARBON RESISTOR (CHIP)	10.0K 63M J RECT.	チップ抵抗			01
R231	**RD350001**	CARBON RESISTOR (CHIP)	0 63M J RECT.	チップ抵抗			01
R232	**RD350001**	CARBON RESISTOR (CHIP)	0 63M J RECT.	チップ抵抗			01
R233	**RD359100**	CARBON RESISTOR (CHIP)	1.0M 63M J RECT.	チップ抵抗			01

✻: New Parts

RANK: Japan only

EIF/ENC/OR/PNCA/PNCB and EMKS61A and JS and MK-H and MK-L and PNL/PNR

REF NO.	PART NO.	DESCRIPTION		部品名	REMARKS	QTY	RANK
R234	**RD355220**	CARBON RESISTOR (CHIP)	220.0 63M J RECT.	チップ抵抗			01
R235	**RD355220**	CARBON RESISTOR (CHIP)	220.0 63M J RECT.	チップ抵抗			01
R236	**RD150000**	CARBON RESISTOR (CHIP)	0.0 1/4 J TP	チップ抵抗			01
R237	**RD150000**	CARBON RESISTOR (CHIP)	0.0 1/4 J TP	チップ抵抗			01
R238	**RD356100**	CARBON RESISTOR (CHIP)	1.0K 63M J RECT.	チップ抵抗			01
R260	**RD35427R**	CARBON RESISTOR (CHIP)	27.0 63M J RECT.	チップ抵抗			01
TH202	**WK514700**	POLY SWITCH	MF-MSMF050-2	POLY SWITCH			01
TR201	**VY67770R**	DIGITAL TRANSISTOR	DTB123YK T146	デジタルトランジスタ			01
-217	**VY67770R**	DIGITAL TRANSISTOR	DTB123YK T146	デジタルトランジスタ			01
TR201	**WG989900**	DIGITAL TRANSISTOR	KRA226S-RTK/P	デジタルトランジスタ			01
-217	**WG989900**	DIGITAL TRANSISTOR	KRA226S-RTK/P	デジタルトランジスタ			01
TR221	**WA01310R**	DIGITAL TRANSISTOR	DTDG23YP T100	デジタルトランジスタ			01
-230	**WA01310R**	DIGITAL TRANSISTOR	DTDG23YP T100	デジタルトランジスタ			01
VR001	**VS36820R**	ROTARY VARIABLE RESISTOR	B10K RK09K1130A8G	ロータリーVR 1連	LCD CONTRAST		01
X201	**WH673400**	CERAMIC RESONATOR	16.8MHz CSTCE16M8V51	セラミック振動子			02
	WF310500	CIRCUIT BOARD	EMKS61A (E-BUS)	EMKS61Aシート	(WF31010)(X6637C0)		08
	--	TAPE (ANTI-VIBRATION)	10X64X0.5	防振テープ	(VK34680)		
C0001	**US135100**	CERAMIC CAPACITOR (CHIP)	0.1000 16V Z RECT.	チップセラ(F)			01
C0002	**UF03810R**	ELECTROLYTIC CAPACITOR(CHIP)	100 16V	チップケミコン			01
C0003	**US064100**	CERAMIC CAPACITOR (CHIP)	0.0100 50V K RECT.	チップセラ(B)			01
C0004	**US135100**	CERAMIC CAPACITOR (CHIP)	0.1000 16V Z RECT.	チップセラ(F)			01
C0005	**US135100**	CERAMIC CAPACITOR (CHIP)	0.1000 16V Z RECT.	チップセラ(F)			01
C0006	**US062100**	CERAMIC CAPACITOR (CHIP)	100P 50V J RECT.	チップセラ(SL)			01
-0028	**US062100**	CERAMIC CAPACITOR (CHIP)	100P 50V J RECT.	チップセラ(SL)			01
CN001	**VB39030R**	CONNECTOR	PH 7P TE	ベーススポスト			01
CN002	**VK02560R**	WIRE TRAP	52147 12P TE	ワイヤートラップ			01
CN003	**VK024900**	WIRE TRAP	52147 5P TE	ワイヤートラップ			01
CN004	**VK025100**	WIRE TRAP	52147 7P TE	ワイヤートラップ			01
D0001	**VT332900**	DIODE	1SS355 TE-17 TP	ダイオード			01
-0003	**VT332900**	DIODE	1SS355 TE-17 TP	ダイオード			01
IC001	**X003120R**	IC	UPD780031AYGK-N04	IC	E-LKS		05
J0002	**RD350001**	CARBON RESISTOR (CHIP)	0 63M J RECT.	チップ抵抗			01
R0001	**RD356100**	CARBON RESISTOR (CHIP)	1.0K 63M J RECT.	チップ抵抗			01
R0002	**RD354470**	CARBON RESISTOR (CHIP)	47.0 63M J RECT.	チップ抵抗			01
R0003	**RD354470**	CARBON RESISTOR (CHIP)	47.0 63M J RECT.	チップ抵抗			01
R0005	**RD350001**	CARBON RESISTOR (CHIP)	0 63M J RECT.	チップ抵抗			01
R0006	**RD350001**	CARBON RESISTOR (CHIP)	0 63M J RECT.	チップ抵抗			01
RA001	**V809080R**	RESISTOR ARRAY	RGLE12X103J	抵抗アレイ			01
X0001	**V615050R**	CERAMIC RESONATOR	8.38MHz EFOS8384E5	セラミック振動子			01
X0001	**WU956300**	RESONATOR CERAMIC	8.38MHz CSTCC8M38G56	セラミック振動子			01
	--	CIRCUIT BOARD	JS	JSシート	(WY02620)(YD299A0)		
CN1	**VB39000R**	CONNECTOR	PH 4P TE	ベーススポスト			01
VR1	**WN154400**	VR ROTARY	B 10.0K RK09Y11L00	ロータリーVR 1連	PITCH BEND		03
VR2	**WN154400**	VR ROTARY	B 10.0K RK09Y11L00	ロータリーVR 1連	MODULATION		03
	VU648200	CIRCUIT BOARD	MK-H	MK-Hシート	(VU64800)(XR565C0)		09
2	**VB941200**	DIODE	1SS133,1SS176 TE-5	ダイオード		54	01
5	**VK02560R**	WIRE TRAP	52147 12P TE	ワイヤートラップ			01
6	**VK024900**	WIRE TRAP	52147 5P TE	ワイヤートラップ			01
	VU648101	CIRCUIT BOARD	MK-L	MK-Lシート	(VU64790)(XR564C0)		08
2	**VB941200**	DIODE	1SS133,1SS176 TE-5	ダイオード		68	01
5	**VK02560R**	WIRE TRAP	52147 12P TE	ワイヤートラップ		2	01
6	**VK025100**	WIRE TRAP	52147 7P TE	ワイヤートラップ			01
	WJ012900	CIRCUIT BOARD	PNL	PNLシート	(WJ01280)(X8086D0)		11
	WJ013000	CIRCUIT BOARD	PNR	PNRシート	(WJ01280)(X8086D0)		11
CN001	**WD29590R**	FFC CONNECTOR	52793 23P SE	FFCコネクター			01
CN002	**VT388400**	CONNECTOR	PH 3P TE	ベース付ポスト			01
CN101	**V457490R**	FFC CONNECTOR	52793-2670	FFCコネクター			02
CN102	**WA62570R**	FFC CONNECTOR	52793 14P SE	FFCコネクター			
CN103	**VT619300**	CONNECTOR	PH 7P SE	ベース付ポスト			01
CN105	**WC194500**	FFC/FPC CONNECTOR	52808 6P TE	FFC／FPCコネクタ			01
D001	**V959920R**	DIODE	HSU119 TRF-E	チップダイオード			01
-044	**V959920R**	DIODE	HSU119 TRF-E	チップダイオード			01
D001	**VR49650R**	DIODE	MA2J1110GL TP	チップダイオード			01
-044	**VR49650R**	DIODE	MA2J1110GL TP	チップダイオード			01
D001	**VT332900**	DIODE	1SS355 TE-17 TP	ダイオード			01

✻: New Parts

RANK: Japan only

PNL/PNR

REF NO.	PART NO.	DESCRIPTION		部品名	REMARKS	QTY	RANK
-044	**VT332900**	DIODE	1SS355 TE-17 TP	ダイオード			01
D001	**WC398800**	DIODE	KDS160-RTK/P TP	ダイオード			01
-044	**WC398800**	DIODE	KDS160-RTK/P TP	ダイオード			01
D101	**V959920R**	DIODE	HSU119 TRF-E	チップダイオード			01
-109	**V959920R**	DIODE	HSU119 TRF-E	チップダイオード			01
D101	**VR49650R**	DIODE	MA2J1110GL TP	チップダイオード			01
-109	**VR49650R**	DIODE	MA2J1110GL TP	チップダイオード			01
D101	**VT332900**	DIODE	1SS355 TE-17 TP	ダイオード			01
-109	**VT332900**	DIODE	1SS355 TE-17 TP	ダイオード			01
D101	**WC398800**	DIODE	KDS160-RTK/P TP	ダイオード			01
-109	**WC398800**	DIODE	KDS160-RTK/P TP	ダイオード			01
D111	**V959920R**	DIODE	HSU119 TRF-E	チップダイオード			01
-151	**V959920R**	DIODE	HSU119 TRF-E	チップダイオード			01
D111	**VR49650R**	DIODE	MA2J1110GL TP	チップダイオード			01
-151	**VR49650R**	DIODE	MA2J1110GL TP	チップダイオード			01
D111	**VT332900**	DIODE	1SS355 TE-17 TP	ダイオード			01
-151	**VT332900**	DIODE	1SS355 TE-17 TP	ダイオード			01
D111	**WC398800**	DIODE	KDS160-RTK/P TP	ダイオード			01
-151	**WC398800**	DIODE	KDS160-RTK/P TP	ダイオード			01
LD001	**WJ491700**	LED (CHIP) AMBER	BL-HJF36J-TRB	チップLED	LEFT (PART SELECT)		01
LD002	**WJ491700**	LED (CHIP) AMBER	BL-HJF36J-TRB	チップLED	RIGHT1 (PART SELECT)		01
LD003	**WJ491700**	LED (CHIP) AMBER	BL-HJF36J-TRB	チップLED	RIGHT2 (PART SELECT)		01
LD004	**WJ491700**	LED (CHIP) AMBER	BL-HJF36J-TRB	チップLED	PIANO (VOICE)		01
LD005	**WJ491700**	LED (CHIP) AMBER	BL-HJF36J-TRB	チップLED	GUITAR & BASS (VOICE)		01
LD006	**WJ491700**	LED (CHIP) AMBER	BL-HJF36J-TRB	チップLED	ORGAN & ACCORDION (VOICE)		01
LD007	**WJ491700**	LED (CHIP) AMBER	BL-HJF36J-TRB	チップLED	CHOIR & PAD (VOICE)		01
LD008	**WJ491700**	LED (CHIP) AMBER	BL-HJF36J-TRB	チップLED	ORIENTAL (VOICE)		01
LD009	**WJ491700**	LED (CHIP) AMBER	BL-HJF36J-TRB	チップLED	E.PIANO (VOICE)		01
LD010	**WJ491700**	LED (CHIP) AMBER	BL-HJF36J-TRB	チップLED	SAXOPHONE (VOICE)		01
LD011	**WJ491700**	LED (CHIP) AMBER	BL-HJF36J-TRB	チップLED	TRUMPET (VOICE)		01
LD012	**WJ491700**	LED (CHIP) AMBER	BL-HJF36J-TRB	チップLED	SYNTH. & FX (VOICE)		01
LD013	**WJ491700**	LED (CHIP) AMBER	BL-HJF36J-TRB	チップLED	PERC. & DRUM KIT (VOICE)		01
LD014	**WJ491700**	LED (CHIP) AMBER	BL-HJF36J-TRB	チップLED	LEFT HOLD (PART ON/OFF)		01
LD015	**WJ491700**	LED (CHIP) AMBER	BL-HJF36J-TRB	チップLED	LEFT (PART ON/OFF)		01
LD016	**WJ491700**	LED (CHIP) AMBER	BL-HJF36J-TRB	チップLED	RIGHT1 (PART ON/OFF)		01
LD017	**WJ491700**	LED (CHIP) AMBER	BL-HJF36J-TRB	チップLED	RIGHT2 (PART ON/OFF)		01
LD018	**WJ491700**	LED (CHIP) AMBER	BL-HJF36J-TRB	チップLED	STRINGS (VOICE)		01
LD019	**WJ491700**	LED (CHIP) AMBER	BL-HJF36J-TRB	チップLED	FLUTE & WOODWIND (VOICE)		01
LD020	**WJ491700**	LED (CHIP) AMBER	BL-HJF36J-TRB	チップLED	BRASS (VOICE)		01
LD021	**WJ491700**	LED (CHIP) AMBER	BL-HJF36J-TRB	チップLED	ORGAN FLUTES (VOICE)		01
LD022	**WJ491700**	LED (CHIP) AMBER	BL-HJF36J-TRB	チップLED	EXPANSION/USER (VOICE)		01
LD023	**WJ491600**	LED (CHIP) AMBER/Y.GREEN	BL-HJFGE36J-TRB	チップ2色LED	1 (MULTI PAD CONTROL)		01
LD024	**WJ491600**	LED (CHIP) AMBER/Y.GREEN	BL-HJFGE36J-TRB	チップ2色LED	2 (MULTI PAD CONTROL)		01
LD025	**WJ491600**	LED (CHIP) AMBER/Y.GREEN	BL-HJFGE36J-TRB	チップ2色LED	3 (MULTI PAD CONTROL)		01
LD026	**WJ491600**	LED (CHIP) AMBER/Y.GREEN	BL-HJFGE36J-TRB	チップ2色LED	4 (MULTI PAD CONTROL)		01
LD027	**WJ491600**	LED (CHIP) AMBER/Y.GREEN	BL-HJFGE36J-TRB	チップ2色LED	1 (ONE TOUCH SETTING)		01
LD028	**WJ491600**	LED (CHIP) AMBER/Y.GREEN	BL-HJFGE36J-TRB	チップ2色LED	2 (ONE TOUCH SETTING)		01
LD029	**WJ491600**	LED (CHIP) AMBER/Y.GREEN	BL-HJFGE36J-TRB	チップ2色LED	3 (ONE TOUCH SETTING)		01
LD030	**WJ491600**	LED (CHIP) AMBER/Y.GREEN	BL-HJFGE36J-TRB	チップ2色LED	4 (ONE TOUCH SETTING)		01
LD031	**WJ491700**	LED (CHIP) AMBER	BL-HJF36J-TRB	チップLED	HARMONY/ECHO (VOICE CONTROL)		01
LD032	**WJ491700**	LED (CHIP) AMBER	BL-HJF36J-TRB	チップLED	TOUCH (VOICE CONTROL)		01
LD033	**WJ491700**	LED (CHIP) AMBER	BL-HJF36J-TRB	チップLED	SUSTAIN (VOICE CONTROL)		01
LD034	**WJ491700**	LED (CHIP) AMBER	BL-HJF36J-TRB	チップLED	MONO (VOICE CONTROL)		01
LD035	**WJ491700**	LED (CHIP) AMBER	BL-HJF36J-TRB	チップLED	DSP (VOICE CONTROL)		01
LD036	**WJ491700**	LED (CHIP) AMBER	BL-HJF36J-TRB	チップLED	VARI. (VOICE CONTROL)		01
LD101	**WJ491700**	LED (CHIP) AMBER	BL-HJF36J-TRB	チップLED	REPEAT (SONG)		01
LD102	**WJ491700**	LED (CHIP) AMBER	BL-HJF36J-TRB	チップLED	GUIDE (SONG)		01
LD103	**WJ491600**	LED (CHIP) AMBER/Y.GREEN	BL-HJFGE36J-TRB	チップ2色LED	EXTRA TR (SONG)		01
LD104	**WJ491600**	LED (CHIP) AMBER/Y.GREEN	BL-HJFGE36J-TRB	チップ2色LED	TR 2 (SONG)		01
LD105	**WJ491600**	LED (CHIP) AMBER/Y.GREEN	BL-HJFGE36J-TRB	チップ2色LED	TR 1 (SONG)		01
LD107	**WJ491700**	LED (CHIP) AMBER	BL-HJF36J-TRB	チップLED	REC (SONG)		01
LD108	**WJ491600**	LED (CHIP) AMBER/Y.GREEN	BL-HJFGE36J-TRB	チップ2色LED	PLAY/PAUSE (SONG)		01
LD109	**WJ491700**	LED (CHIP) AMBER	BL-HJF36J-TRB	チップLED	FADE IN/OUT		01
LD110	**WJ491700**	LED (CHIP) AMBER	BL-HJF36J-TRB	チップLED	OTS LINK		01
LD111	**WJ491700**	LED (CHIP) AMBER	BL-HJF36J-TRB	チップLED	AUTO FILL IN		01
LD112	**WJ491700**	LED (CHIP) AMBER	BL-HJF36J-TRB	チップLED	POP & ROCK (STYLE)		01
LD113	**WJ491700**	LED (CHIP) AMBER	BL-HJF36J-TRB	チップLED	SWING & JAZZ (STYLE)		01
LD114	**WJ491700**	LED (CHIP) AMBER	BL-HJF36J-TRB	チップLED	ARABIC & MAGHREBI (STYLE)		01
LD115	**WJ491700**	LED (CHIP) AMBER	BL-HJF36J-TRB	チップLED	TURKISH & GREEK (STYLE)		01
LD116	**WJ491700**	LED (CHIP) AMBER	BL-HJF36J-TRB	チップLED	BALLAD (STYLE)		01

✻: New Parts

RANK: Japan only

PNL/PNR

REF NO.	PART NO.	DESCRIPTION		部品名	REMARKS	QTY	RANK
LD117	**WJ491700**	LED (CHIP) AMBER	BL-HJF36J-TRB	チップ LED	LATIN & BALLROOM (STYLE)		01
LD118	**WJ491700**	LED (CHIP) AMBER	BL-HJF36J-TRB	チップ LED	KHALIGI (STYLE)		01
LD119	**WJ491700**	LED (CHIP) AMBER	BL-HJF36J-TRB	チップ LED	WORLD (STYLE)		01
LD120	**WJ491700**	LED (CHIP) AMBER	BL-HJF36J-TRB	チップ LED	DANCE (STYLE)		01
LD121	**WJ491700**	LED (CHIP) AMBER	BL-HJF36J-TRB	チップ LED	ENTERTAINMENT (STYLE)		01
LD122	**WJ491700**	LED (CHIP) AMBER	BL-HJF36J-TRB	チップ LED	IRANIAN (STYLE)		01
LD123	**WJ491700**	LED (CHIP) AMBER	BL-HJF36J-TRB	チップ LED	EXPANSION/USER (STYLE)		01
LD124	**WJ491700**	LED (CHIP) AMBER	BL-HJF36J-TRB	チップ LED	METRONOME		01
LD125	**WJ491700**	LED (CHIP) AMBER	BL-HJF36J-TRB	チップ LED	ACMP		01
LD126	**WJ491600**	LED (CHIP) AMBER/Y.GREEN	BL-HJFGE36J-TRB	チップ2色 LED	INTRO I		01
LD127	**WJ491600**	LED (CHIP) AMBER/Y.GREEN	BL-HJFGE36J-TRB	チップ2色 LED	INTRO II		01
LD128	**WJ491600**	LED (CHIP) AMBER/Y.GREEN	BL-HJFGE36J-TRB	チップ2色 LED	INTRO III		01
LD129	**WJ491600**	LED (CHIP) AMBER/Y.GREEN	BL-HJFGE36J-TRB	チップ2色 LED	MAIN VARIATION A		01
LD130	**WJ491600**	LED (CHIP) AMBER/Y.GREEN	BL-HJFGE36J-TRB	チップ2色 LED	MAIN VARIATION B		01
LD131	**WJ491600**	LED (CHIP) AMBER/Y.GREEN	BL-HJFGE36J-TRB	チップ2色 LED	MAIN VARIATION C		01
LD132	**WJ491600**	LED (CHIP) AMBER/Y.GREEN	BL-HJFGE36J-TRB	チップ2色 LED	MAIN VARIATION D		01
LD133	**WJ491600**	LED (CHIP) AMBER/Y.GREEN	BL-HJFGE36J-TRB	チップ2色 LED	BREAK		01
LD134	**WJ491600**	LED (CHIP) AMBER/Y.GREEN	BL-HJFGE36J-TRB	チップ2色 LED	ENDING/rit. I		01
LD135	**WJ491600**	LED (CHIP) AMBER/Y.GREEN	BL-HJFGE36J-TRB	チップ2色 LED	ENDING/rit. II		01
LD136	**WJ491600**	LED (CHIP) AMBER/Y.GREEN	BL-HJFGE36J-TRB	チップ2色 LED	ENDING/rit. III		01
LD137	**WJ491700**	LED (CHIP) AMBER	BL-HJF36J-TRB	チップ LED	SYNC STOP		01
LD138	**WJ491700**	LED (CHIP) AMBER	BL-HJF36J-TRB	チップ LED	SYNC START		01
LD139	**WJ491600**	LED (CHIP) AMBER/Y.GREEN	BL-HJFGE36J-TRB	チップ2色 LED	START/STOP		01
R001	**RD355100**	CARBON RESISTOR (CHIP)	100.0 63M J RECT.	チップ抵抗			01
R002	**RD35456R**	CARBON RESISTOR (CHIP)	56.0 63M J RECT.	チップ抵抗			01
R003	**RD355100**	CARBON RESISTOR (CHIP)	100.0 63M J RECT.	チップ抵抗			01
R004	**RD35456R**	CARBON RESISTOR (CHIP)	56.0 63M J RECT.	チップ抵抗			01
R005	**RD355100**	CARBON RESISTOR (CHIP)	100.0 63M J RECT.	チップ抵抗			01
R006	**RD35456R**	CARBON RESISTOR (CHIP)	56.0 63M J RECT.	チップ抵抗			01
R007	**RD355100**	CARBON RESISTOR (CHIP)	100.0 63M J RECT.	チップ抵抗			01
R008	**RD35456R**	CARBON RESISTOR (CHIP)	56.0 63M J RECT.	チップ抵抗			01
R009	**RD355100**	CARBON RESISTOR (CHIP)	100.0 63M J RECT.	チップ抵抗			01
R010	**RD35456R**	CARBON RESISTOR (CHIP)	56.0 63M J RECT.	チップ抵抗			01
R011	**RD355100**	CARBON RESISTOR (CHIP)	100.0 63M J RECT.	チップ抵抗			01
R012	**RD35456R**	CARBON RESISTOR (CHIP)	56.0 63M J RECT.	チップ抵抗			01
R013	**RD355100**	CARBON RESISTOR (CHIP)	100.0 63M J RECT.	チップ抵抗			01
R014	**RD35456R**	CARBON RESISTOR (CHIP)	56.0 63M J RECT.	チップ抵抗			01
R015	**RD355100**	CARBON RESISTOR (CHIP)	100.0 63M J RECT.	チップ抵抗			01
R016	**RD35456R**	CARBON RESISTOR (CHIP)	56.0 63M J RECT.	チップ抵抗			01
R101	**RD355100**	CARBON RESISTOR (CHIP)	100.0 63M J RECT.	チップ抵抗			01
R102	**RD35456R**	CARBON RESISTOR (CHIP)	56.0 63M J RECT.	チップ抵抗			01
R103	**RD355100**	CARBON RESISTOR (CHIP)	100.0 63M J RECT.	チップ抵抗			01
R104	**RD35456R**	CARBON RESISTOR (CHIP)	56.0 63M J RECT.	チップ抵抗			01
R105	**RD355100**	CARBON RESISTOR (CHIP)	100.0 63M J RECT.	チップ抵抗			01
R106	**RD35456R**	CARBON RESISTOR (CHIP)	56.0 63M J RECT.	チップ抵抗			01
R109	**RD355100**	CARBON RESISTOR (CHIP)	100.0 63M J RECT.	チップ抵抗			01
R110	**RD35456R**	CARBON RESISTOR (CHIP)	56.0 63M J RECT.	チップ抵抗			01
R111	**RD355100**	CARBON RESISTOR (CHIP)	100.0 63M J RECT.	チップ抵抗			01
R112	**RD35456R**	CARBON RESISTOR (CHIP)	56.0 63M J RECT.	チップ抵抗			01
R113	**RD355100**	CARBON RESISTOR (CHIP)	100.0 63M J RECT.	チップ抵抗			01
R114	**RD35456R**	CARBON RESISTOR (CHIP)	56.0 63M J RECT.	チップ抵抗			01
R115	**RD355100**	CARBON RESISTOR (CHIP)	100.0 63M J RECT.	チップ抵抗			01
R116	**RD35456R**	CARBON RESISTOR (CHIP)	56.0 63M J RECT.	チップ抵抗			01
R117	**RD355100**	CARBON RESISTOR (CHIP)	100.0 63M J RECT.	チップ抵抗			01
R118	**RD35456R**	CARBON RESISTOR (CHIP)	56.0 63M J RECT.	チップ抵抗			01
R119	**RD355100**	CARBON RESISTOR (CHIP)	100.0 63M J RECT.	チップ抵抗			01
R120	**RD35456R**	CARBON RESISTOR (CHIP)	56.0 63M J RECT.	チップ抵抗			01
R121	**RD355100**	CARBON RESISTOR (CHIP)	100.0 63M J RECT.	チップ抵抗			01
R122	**RD35456R**	CARBON RESISTOR (CHIP)	56.0 63M J RECT.	チップ抵抗			01
R123	**RD355100**	CARBON RESISTOR (CHIP)	100.0 63M J RECT.	チップ抵抗			01
R124	**RD35456R**	CARBON RESISTOR (CHIP)	56.0 63M J RECT.	チップ抵抗			01
R125	**RD355100**	CARBON RESISTOR (CHIP)	100.0 63M J RECT.	チップ抵抗			01
R126	**RD35456R**	CARBON RESISTOR (CHIP)	56.0 63M J RECT.	チップ抵抗			01
R127	**RD355100**	CARBON RESISTOR (CHIP)	100.0 63M J RECT.	チップ抵抗			01
R128	**RD35456R**	CARBON RESISTOR (CHIP)	56.0 63M J RECT.	チップ抵抗			01
R129	**RD355100**	CARBON RESISTOR (CHIP)	100.0 63M J RECT.	チップ抵抗			01
R130	**RD35456R**	CARBON RESISTOR (CHIP)	56.0 63M J RECT.	チップ抵抗			01
R131	**RD355100**	CARBON RESISTOR (CHIP)	100.0 63M J RECT.	チップ抵抗			01
R132	**RD35456R**	CARBON RESISTOR (CHIP)	56.0 63M J RECT.	チップ抵抗			01
R133	**RD355100**	CARBON RESISTOR (CHIP)	100.0 63M J RECT.	チップ抵抗			01

✻: New Parts

RANK: Japan only

PNL/PNR

	REF NO.	PART NO.	DESCRIPTION		部品名	REMARKS	QTY	RANK
	-135	**RD355100**	CARBON RESISTOR (CHIP)	100.0 63M J RECT.	チップ抵抗			01
	R136	**RD35456R**	CARBON RESISTOR (CHIP)	56.0 63M J RECT.	チップ抵抗			01
		X8535A00	SPEAKER	12.0cm 6ohm 30W	スピーカー	WOOFER		08
*		**YD681A00**	LOUD SPEAKER	5.0cm 6ohm 10W	スピーカ	TWEETER		
		WR339600	CRYSTAL DISPLAY	KG057QVLFF-G00	液晶ディスプレイ			45

✻: New Parts

RANK: Japan only

■ PSR-A2000 BLOCK DIAGRAM

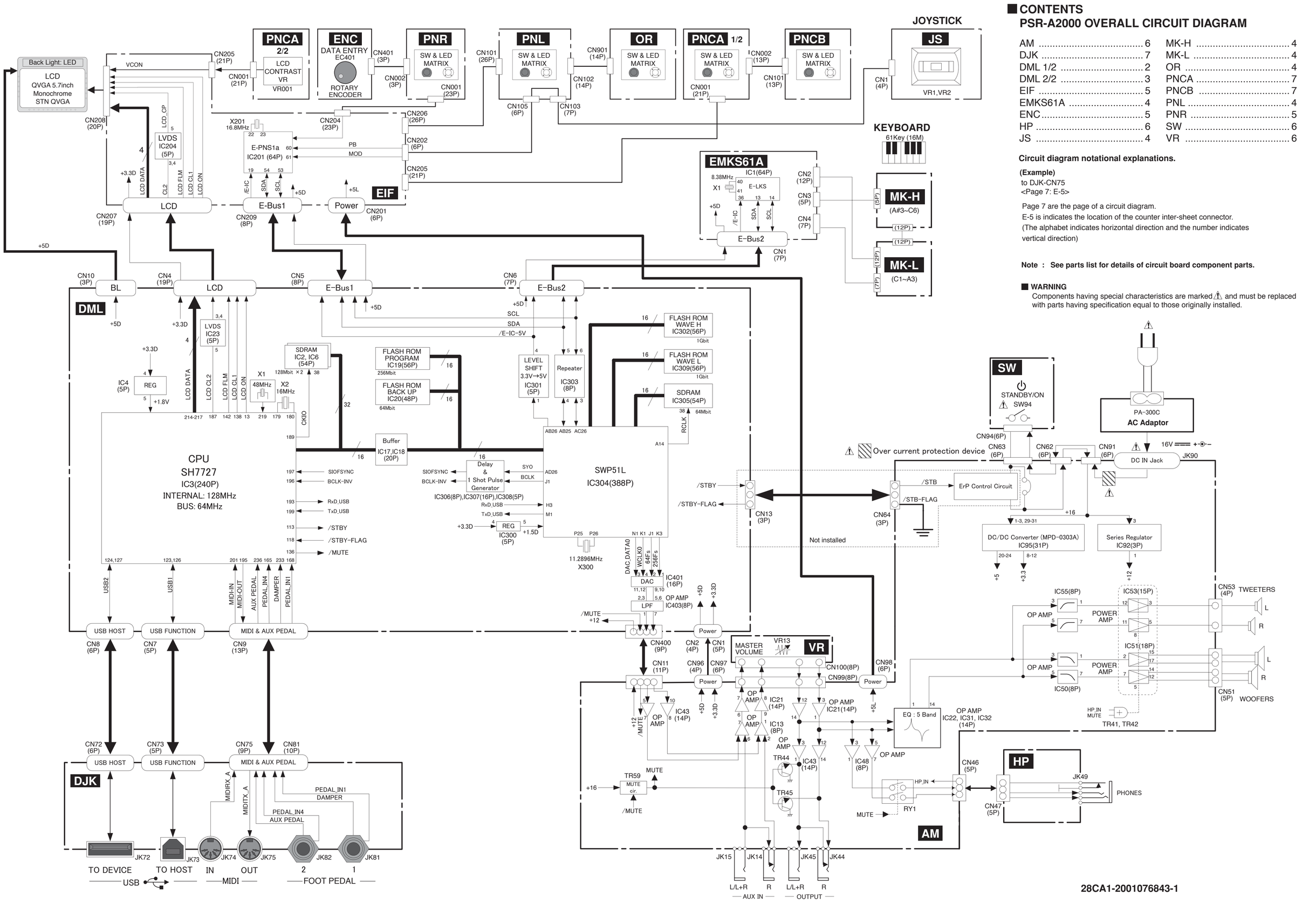

■ CONTENTS

PSR-A2000 OVERALL CIRCUIT DIAGRAM

AM	6	MK-H	4
DJK	7	MK-L	4
DML 1/2	2	OR	4
DML 2/2	3	PNCA	7
EIF	5	PNCB	7
EMKS61A	4	PNL	4
ENC	5	PNR	5
HP	6	SW	6
JS	4	VR	6

Circuit diagram notational explanations.

(Example)
to DJK-CN75
<Page 7: E-5>

Page 7 are the page of a circuit diagram.
E-5 is indicates the location of the counter inter-sheet connector.
(The alphabet indicates horizontal direction and the number indicates vertical direction)

Note : See parts list for details of circuit board component parts.

■ WARNING
Components having special characteristics are marked ⚠ and must be replaced with parts having specification equal to those originally installed.

■ PSR-A2000 CIRCUIT BOARD LAYOUT & WIRING

• Top view

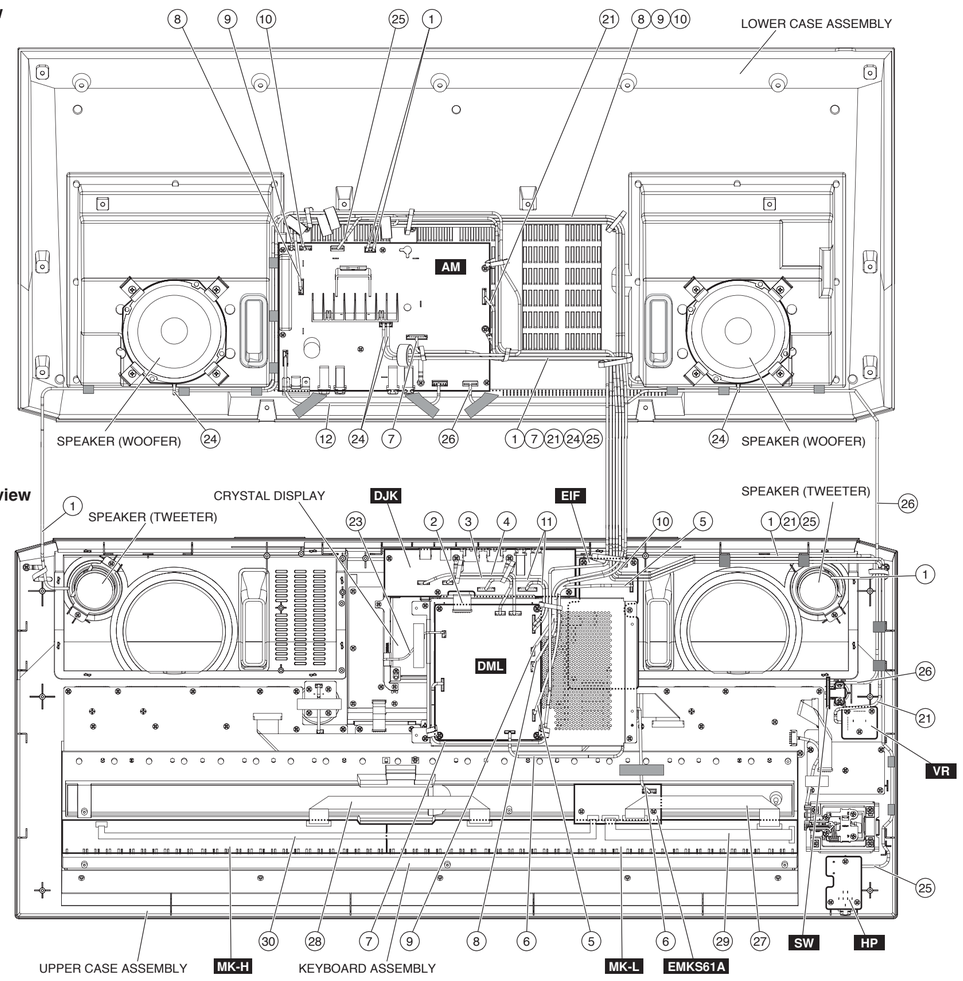

• Bottom view

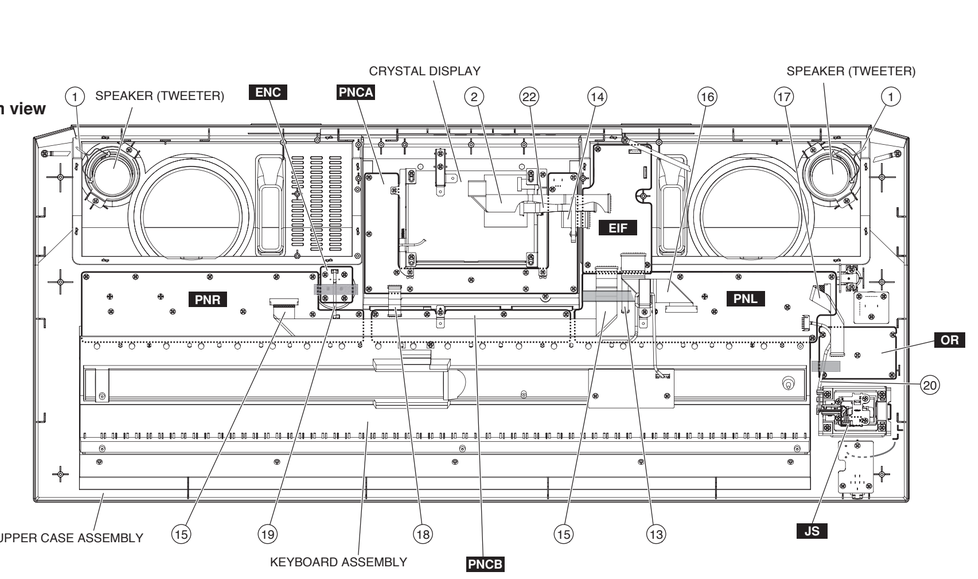

• Bottom view

No.	Unit Name	Location	Parts No.	Connector Assembly	Destination						Remarks
①	OVERALL ASSEMBLY	210	(WR64770)	TW-LF	AM-CN53	*1	*7	SPEAKER L (TWEETER)	*2	*9	4P
								SPEAKER R (TWEETER)	*2	*8	
②		500	WR026200	LVDS	DML-CN4	*1	*6	EIF-CN207	*1	*6	19P L=260
③		510	WR338000	USB CABLE	DJK-CN73	*1	*7	DML-CN7	*1	*7	5P L=100
④		520	WR337800	USB CABLE	DJK-CN72	*1	*7	DML-CN8	*1	*7	6P L=130
⑤		530	(WR02450)	ZH	DML-CN5	*1	*7	EIF-CN209	*1	*7	8P
⑥		550	(WS51600)	E-BUS2LF	DML-CN6	*1	*7	EMKS61A-CN1	*1	*7	7P
⑦		560	(WR02610)	ANALOG	AM-CN11	*1	*7	DML-CN400	*1	*7	9P-11P L=840
⑧		570	(WR64730)	3D-LF	AM-CN97	*1	*7	DML-CN1	*1	*7	5P-6P L=860
⑨		572	(WR64750)	5D-LF	AM-CN96	*1	*7	DML-CN2	*1	*7	4P L=900
⑩		574	(WR64760)	5L-LF	AM-CN98	*1	*7	EIF-CN201	*1	*7	6P L=800
⑪		600	(WR02510)	MIDI-PDL	DJK-CN75	*1	*7	DML-CN9	*1	*7	13P-9P/10P
					DJK-CN81	*1	*7				
⑫		610	(WW99760)	16V	AM-CN91	*1	*7	AM-CN62	*1	*7	6P
⑬		650	MFA06080	FLAT CABLE	EIF-CN202	*1	*6	PNL-CN105	*1	*6	6P L=80
⑭		660	MFA21060	FLAT CABLE	EIF-CN205	*1	*6	PNCA-CN001	*1	*6	21P L=60
⑮		670	WK547500	FFC CABLE	EIF-CN204	*1	*6	PNR-CN001	*1	*6	23P L=500
⑯		680	WK547400	FFC CABLE	EIF-CN206	*1	*6	PNL-CN101	*1	*6	26P L=140
⑰		740	WK737500	FFC CABLE	PNL-CN102	*1	*6	OR-CN901	*1	*6	14P L=120
⑱		750	MFA13060	FLAT CABLE	PNCA-CN002	*1	*6	PNCB-CN101	*1	*6	13P L=60
⑲		760	(WY54000)	PH	PNR-CN002	*1	*7	ENC-CN401	*1	*7	3P L=65
⑳	UPPER CASE ASSEMBLY	300b	WW997500	JS	JS-CN1	*1	*7	PNL-CN103	*1	*7	4P-7P
㉑		500	(WR02580)	MV	VR-CN100	*1	*7	AM-CN99	*1	*7	8P L=840
㉒	LCD ASSEMBLY	60	WK547600	FFC CABLE	EIF-CN208	*4	*6	CRYSTAL DISPLAY	*4	*6	20P L=100
㉓		10	WR339600	CRYSTAL DISPLAY	CRYSTAL DISPLAY	*3		DML-CN10	*1	*7	3P
㉔	LOWER CASE ASSEMBLY	120	(WR64780)	WO-LF	AM-CN51	*1	*7	SPEAKER L (WOOFER)	*2	*9	5P
								SPEAKER R (WOOFER)	*2	*8	
㉕	HP CIRCUIT BOARD	WH001	(WR02560)	HP	HP-CN47	*3		AM-CN46	*1	*5	5P
㉖	SW CIRCUIT BOARD	WH003	(WW99740)	SW	SW-CN94	*3		AM-CN63	*1	*5	6P
㉗	KEYBOARD ASSEMBLY	S4	VU95890R	CABLE	EMKS61A-CN2	*1	*5	MK-L	*1		12P
㉘		S5	VU65950R	CABLE	MK-H	*1		MK-L	*1		12P
㉙		S6	VU65940R	CABLE	EMKS61A-CN4	*1	*5	MK-L	*1		7P
㉚		S7	VU65960R	CABLE	EMKS61A-CN3	*1	*5	MK-H	*1		5P

* The parts with "( )" in "**Part No.**" are not available as spare parts.
*1: Installation
*2: Manual soldering
*3: Connected
*4: Installation and lock
*5: Edge mark is adjusted to Pin 1 mark (△ mark).
*6: Align the conductor of the cable with the connector contact.
*7: Coordinate with polarity of the connector.
*8: Red wire is connected to (+) terminal. Blue wire is connected to (–) terminal.
*9: White wire is connected to (+) terminal. Black wire is connected to (–) terminal.

Caution: Be sure to attach the removed filament tape just as it was before removal.

■ PSR-A2000 OVERALL CIRCUIT DIAGRAM 1/6 (DML 1/2)

DML 1/2

REGULATOR +1.8V

D1 : 1SR154
IC4 R1172H181B-T1-F
CPUVCC=1.8V
CPUVCC
Output Current Max 650mA

INVERTER

IC1 SN74LV14APWR
SW1
Not installed

VOLTAGE DETECTOR

IC2 R3112H291A-F
Detect Voltage : 2.9V
Reset Time : 44.6ms

OR GATE

IC8 TC7SH32FU
Not installed

D-FF

IC11 SN74LV175APWR
Not installed

AND

IC9 TC74VHC21FT
Not installed

DECODER

IC16 TC74VHC138FT

TRANSCEIVER

IC12 SN74LV8154APWR
IC13 SN74LV8154APWR
IC14 SN74LV8154APWR
IC15 SN74LV8154APWR
IC17 SN74LV8154APWR
IC18 SN74LV8154APWR

CPU (MAIN)

SH7727
IC3
HD6417727F160C

SH7727 configuration

- Clock Mode 2 (MD0 L / MD1 H / MD2 L)
  Internal Clock : 128MHz
  BUS Clock : 64MHz
- Address Space
  CS0:Boot ROM
  CS1:Internal I/O register
  CS2:None
  CS3:Work / Program RAM
  CS4:Buck Up Flash
  CS5:None
  CS6:SWP-/CS(SWP-51L) H'18000000~
  WAVE-/CS(SWP-51L) H'18400000~
  Ethernet Controller H'18800000~
  External Output Port H'18F00000~
- Area0 BUS Width 16bit(MD3 L MD4 H)
- Big Endian (MD5 L)

SDRAM 128M

IC5
IC6
IC7
IC8

FLASH ROM 256M PROGRAM

IC19

FLASH ROM 64M PROGRAM/DATA

IC20

LVDS DRIVER

IC23 DS90LV011ATMF
IC24 DS90LV011ATMF
CN4 52610-1991
to EIF-CN207 <Page 5: K-10>
LCD

BUFFER

IC21 SN74LV126APWR
IC22 SN74LV126APWR
IC1 SN74LV126APWR
to EIF-CN209 <Page 5: H-11>
EBUS1
to EMKS61A-CN1 <Page 4: A-10>
EBUS2

INVERTER

IC7 SN74LV14APWR

HIGH SIDE SWITCH

IC22 BD6519F-E2
DLP11SN900SL2L

USB Function

to DJK-CN73 <Page 7: G-3>
VBUS D- D+ GND FG

USB Host

to DJK-CN72 <Page 7: G-2>
VBUS D- D+ GND FG

INVERTER

IC7 SN74LV14APWR

MIDI & PEDAL

to DJK-CN75 <Page 7: E-5>
MIDI-IN MIDI-OUT MIDI-IC
to DJK-CN81 <Page 7: B-2>
SOSTENUTE SOFT AUXPEDAL DGND PEDAL-IN1 PEDAL-IN2

L34-L37・L40-L42・L44-L46・L52-L59・L63-L65
WK13900 (BK1005HM601-T)
L48-L50
WE86390(DLP11SN900HL2L)

28CC1-2001076846-1

Note: See parts list for details of circuit board component parts.

PSR-A2000

PSR-A2000 OVERALL CIRCUIT DIAGRAM 2/6 (DML 2/2)

DML 2/2

REGULATOR +1.5V

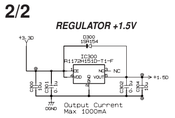

REGULATOR +5V

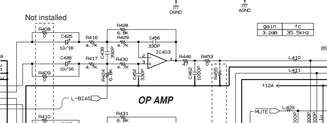

OP AMP

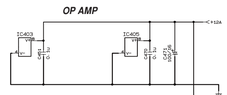

DAC

SWP51L

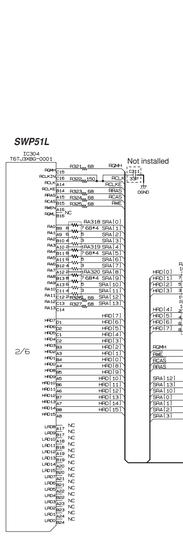

SWP51L

SDRAM 64M

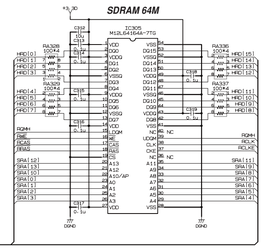

SWP51L

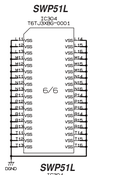

SWP51L

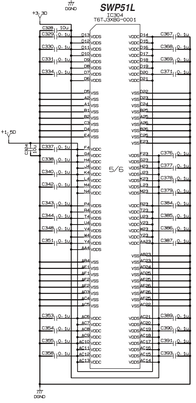

OR GATE

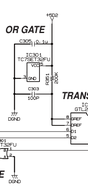

TRANSLATOR

FLASH ROM 1G WAVE H

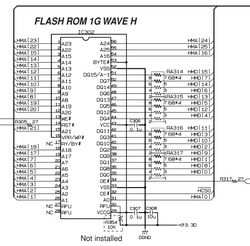

SWP51L

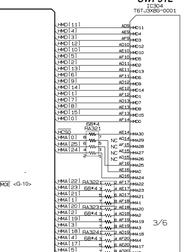

SWP51L

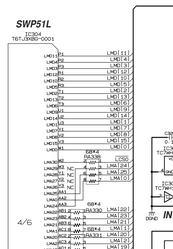

AND GATE

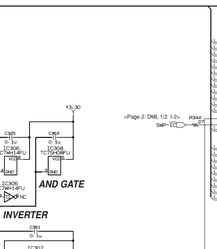

FLASH ROM 1G WAVE L

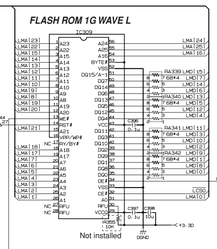

L410-L411 WK13900 (BK1005HM601-T)
L301 V274700(BLM18PG600SN1D)

28CC1-2001076846-2

Note: See parts list for details of circuit board component parts.

PSR-A2000

■PSR-A2000 OVERALL CIRCUIT DIAGRAM 3/6 (EMKS61A, JS, MK-H, MK-L, OR, PNL)

PNL

DEMO SW101 D101 SONG SELECT SW102 D102 SCORE SW103 D103 LYRICS/TEXT SW104 D104

REPEAT SW105 D105 GUIDE SW106 D106 EXTRA TR SW107 D107 TR 2 SW108 D108 TR 1 SW109 D109

MIC SETTING VOCAL HARMONY SW110 D110

REC SW111 D111 STOP SW112 D112 PLAY/PAUSE SW113 D113 REW SW114 D114 FF SW115 D115

FADE IN/OUT SW116 D116 OTS LINK SW117 D117 AUTO FILL IN SW118 D118

Not installed

STYLE

POP&ROCK SW119 D119 SWING&JAZZ SW120 D120 ARABIC&MAGHREBI SW121 D121 TURKISH&GREEK SW122 D122

BALLAD SW123 D123 LATIN&BALLROOM SW124 D124 KHALIGI SW125 D125 WORLD SW126 D126

DANCE SW127 D127 ENTERTAINMENT SW128 D128 IRANIAN SW129 D129 EXPANSION/USER SW130 D130

TRANSPOSE − SW131 D131 TRANSPOSE + SW132 D132

METRONOME SW133 D133 TAP TEMPO SW134 D134

TEMPO − SW135 D135 TEMPO + SW136 D136

ACMP SW137 D137 INTRO 1 SW138 D138 INTRO 2 SW139 D139 INTRO 3 SW140 D140

A SW141 D141 B SW142 D142 C SW143 D143 D SW144 D144

BREAK SW145 D145

1 SW146 D146 2 SW147 D147 3 SW148 D148

SYNC STOP SW149 D149 SYNC START SW150 D150 START/STOP SW151 D151

MAIN VARIATION

ENDING/rit

STYLE CONTROL

to EIF-CN206 <Page 5: E-11>

to EIF-CN202 <Page 5: D-11>

XX : Not installed

28CC1-2001011978-2 3

OR

SCALE SETTING

C# SW901 D# SW902 F# SW903 G# SW904 A# SW905

C SW906 D SW907 E SW908 F SW909 G SW910 A SW911 B SW912

MEMORY SW913 D913

1 SW914 2 SW915 3 SW916 4 SW917 5 SW918 RESET SW919

SCALE MEMORY

28CC1-2001076849-5

JS

PITCH BEND PITCH_X RKOSY11L0001 VR1

MODULATION MOD_Y RKOSY11L0001 VR2

5V PITCH_X MOD_Y GND

28CC1-2001079837

EMKS61A

IC1 UPD78C031AYGK E-LKS

to DML1/2-CN6 <Page 2: P-5>

MK-H (A#3~C6)

A#3 B3 C4 C#4 D4 D#4 E4 F4 F#4 G4 G#4 A4 A#4 B4 C5 C#5 D5 D#5 E5 F5 F#5 G5 G#5 A5 A#5 B5 C6

1M 2M

VU648200

MK-L (C1~A3)

C1 C#1 D1 D#1 E1 F1 F#1 G1 G#1 A1 A#1 B1 C2 C#2 D2 D#2 E2 F2 F#2 G2 G#2 A2 A#2 B2 C3 C#3 D3 D#3 E3 F3 F#3 G3 G#3 A3

VU648100

Note : See parts list for details of circuit board component parts.

: Not installed

28CC1-2000005437

PSR-A2000

■ PSR-A2000 OVERALL CIRCUIT DIAGRAM 4/6 (EIF, ENC, LCD, PNR)

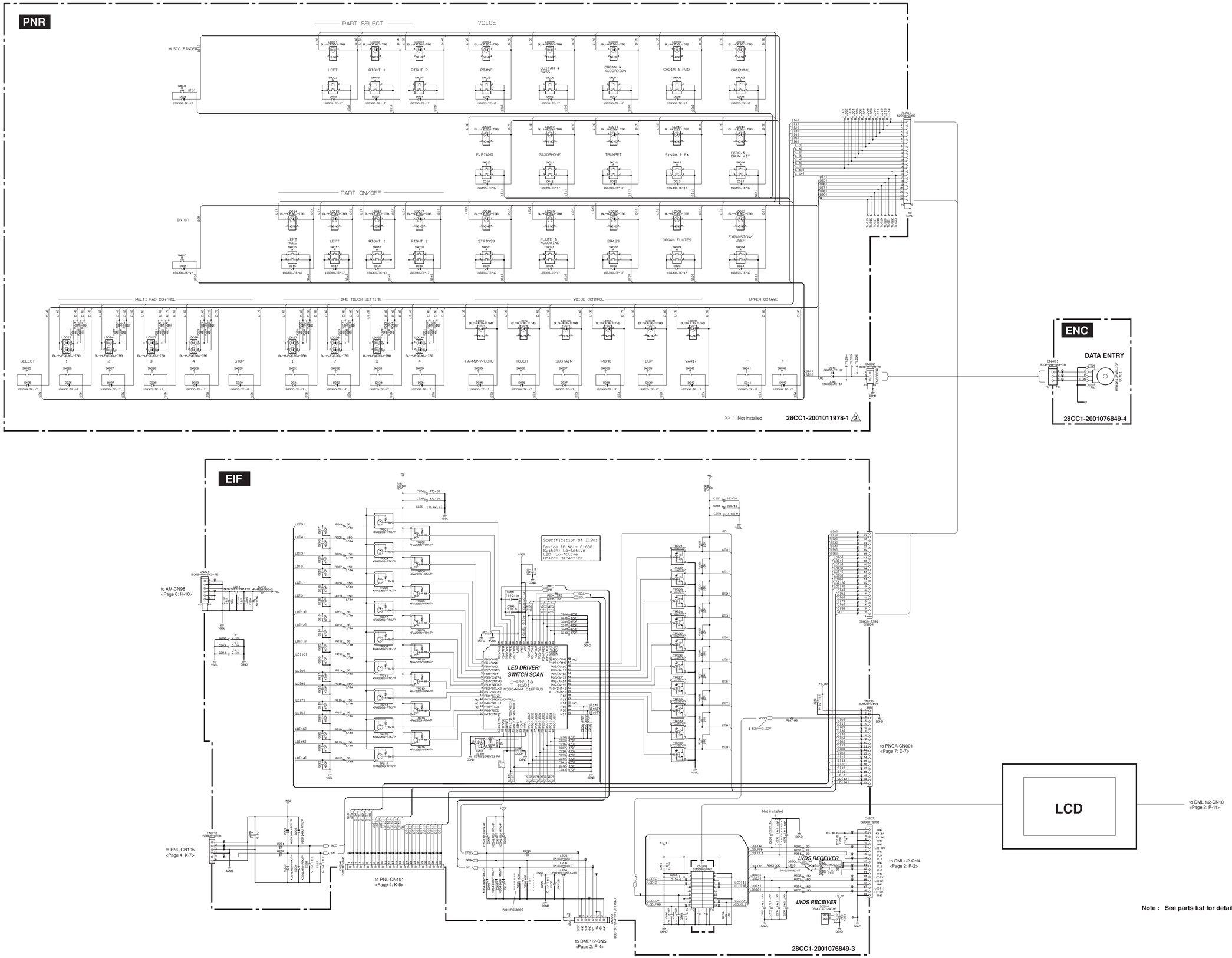

Note : See parts list for details of circuit board component parts.

■PSR-A2000 OVERALL CIRCUIT DIAGRAM 5/6 (AM, HP, SW, VR)

AM

6. POWER ON/OFF CONTROL

DC Rated Voltage : 25V
Temperature Change : ±10%

Not installed

SW 9. Standby Switch

(Standby/On)

28CC1-2001076844-1 ⚠1

VR 1. Master Volume

MASTER VOLUME

28CC1-2001076844-1 ⚠1

2. EQ_L

3. EQ_R

1. AUX IN

AUX IN L/L+R

AUX IN R

4. AUX OUT

OUTPUT L/L+R

OUTPUT R

4. Headphone AMP

LCF : fc=21Hz
HCF : fc=18KHz

HP 4. Phones

PHONES

28CC1-2001076844-1 ⚠1

5. Channel Div. & POWER AMP

HPF 4.8KHz −12dB/Oct

LPF

BA5417 Tweater AMP IC53

POWER AMP 5.0W x 2ch

IC51 LA4705NA Woofer AMP

POWER AMP 17W

TWEETERS

WOOFERS

28CC1-2001076844-1 ⚠1

Power Supply(+6A)

9. Power Supply

REGULATOR +12V

+5D, +3.3D DC/DC Cnv.
Switching frequency 150kHz

DC-DC CONVERTER

16V ⎓ +⊖−

to EIF-CN201 <Page 5: D-8>

to DML1/2-CN2 <Page 2: B-2>

to DML1/2-CN1 <Page 2: B-2>

to DML2/2-CN400 <Page 3: P-6>

R2003	R2004
Jumper Wire	Jumper Wire

Note : See parts list for details of circuit board component parts.

■ WARNING
Components having special characteristics are marked ⚠1 and must be replaced with parts having specification equal to those originally installed.

PSR-A2000

■PSR-A2000 OVERALL CIRCUIT DIAGRAM 6/6 (DJK, PNCA, PNCB)

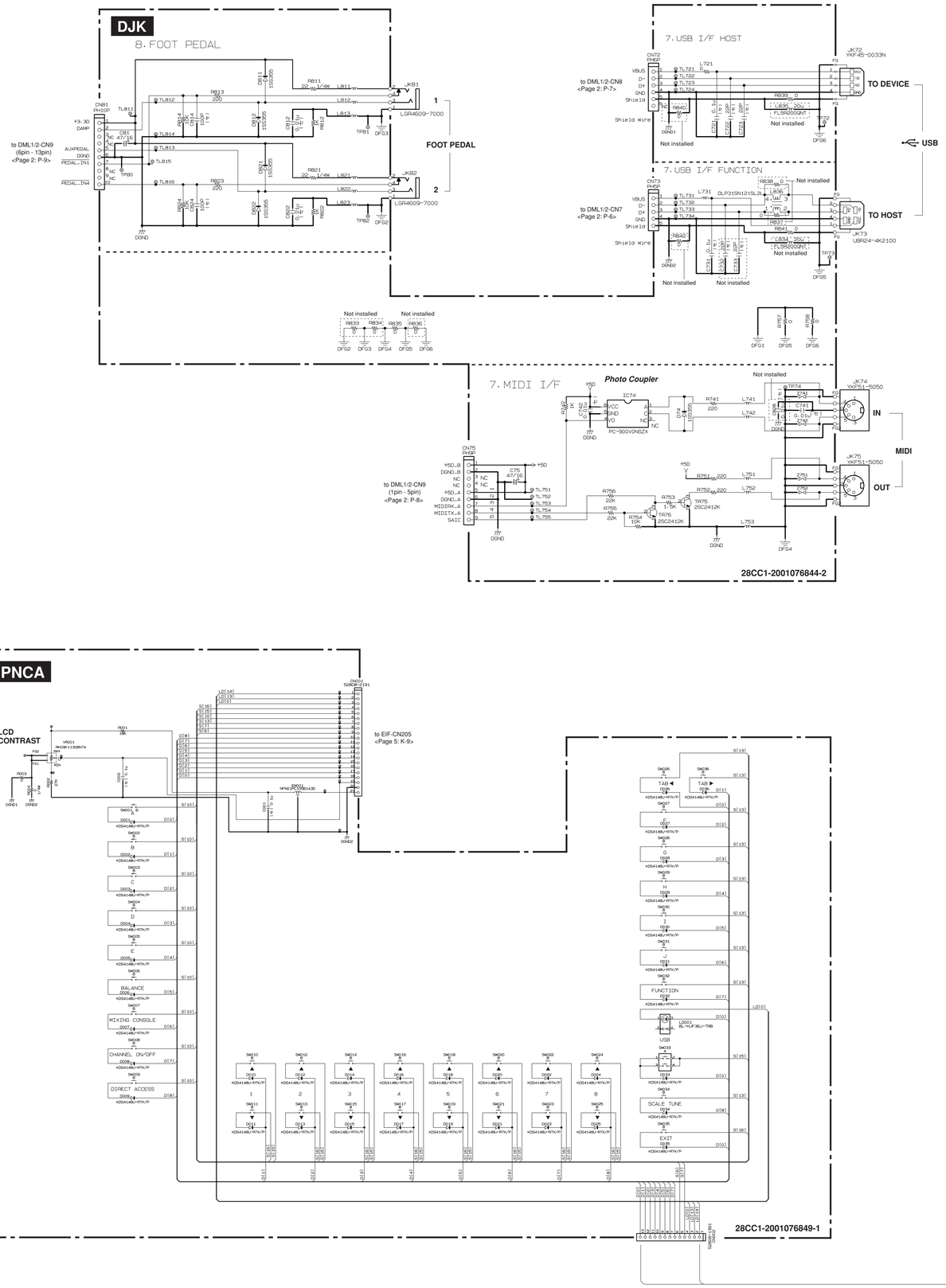

Note : See parts list for details of circuit board component parts.