PORTATONE

PSR-9000

SERVICE MANUAL



■ **CONTENTS**

SPECIFICATIONS 3
PANEL LAYOUT 5
UNIT LAYOUT 6
WIRING 7
BLOCK DIAGRAM 8
DISASSEMBLY PROCEDURE 9
LSI PIN DISCRIPTION 15
IC BLOCK DIAGRAM 23
CIRCUIT BOARDS 26
TEST PROGRAM 37
POWER ON RESET 40
TROUBLESHOOTING 41
MIDI IMPLEMENTATION CHART 43
PARTS LIST

YAMAHA

HAMAMATSU, JAPAN

PK 001628

1.45K-*** Printed in Japan '99.11

IMPORTANT NOTICE

This manual has been provided for the use of authorized Yamaha Retailers and their service personnel. It has been assumed that basic service procedures inherent to the industry, and more specifically Yamaha Products, are already known and understood by the users, and have therefore not been restated.

WARNING: Failure to follow appropriate service and safety procedures when servicing this product may result in personal injury, destruction of expensive components, and failure of the product to perform as specified. For these reasons, we advise all Yamaha product owners that all service required should be performed by an authorized Yamaha Retailer or the appointed service representative.

IMPORTANT: The presentation or sale of this manual to any individual or firm does not constitute authorization, certification or recognition of any applicable technical capabilities, or establish a principle-agent relationship of any form.

The data provided is believed to be accurate and applicable to the unit(s) indicated on the cover. The research, engineering, and service departments of Yamaha are continually striving to improve Yamaha products. Modifications are, therefore, inevitable and changes in specification are subject to change without notice or obligation to retrofit. Should any discrepancy appear to exist, please contact the distributor's Service Division.

WARNING: Static discharges can destroy expensive components. Discharge any static electricity your body may have accumulated by grounding yourself to the ground bus in the unit (heavy gauge black wires connect to this bus).

IMPORTANT: Turn the unit OFF during disassembly and part replacement. Recheck all work before you apply power to the unit.

WARNING: CHEMICAL CONTENT NOTICE!

The solder used in the production of this product contains LEAD. In addition, other electrical/electronic and /or plastic (where applicable) components may also contain traces of chemicals found by the California Health and Welfare Agency (and possibly other entities) to cause cancer and/or birth defects or other reproductive harm.

DO NOT PLACE SOLDER, ELECTRICAL/ELECTRONIC OR PLASTIC COMPONENTS IN YOUR MOUTH FOR ANY REASON WHATSOEVER!

Avoid prolonged, unprotected contact between solder and your skin! When soldering, do not inhale solder fumes or expose eyes to solder/flux vapor!

If you come in contact with solder or components located inside the enclosure of this product, wash your hands before handling food.

■ WARNING

Components having special characteristics are marked ⚠ and must be replaced with parts having specification equal to those originally installed.

SPECIFICATIONS

KEYBOARD

	61Keys (C1~C6) with Touch Response (Initial/After)	

Polyphony

	126 notes max.	

VOICES

Preset	827	331 voices + 480 XG voices + 14 Drum Kits + 2 SFX Kits
Custom	32	User programmable
Organ Flutes	20	10 Preset + 10 User

ORCHESTRATION

Right	3 PART	RIGHT1, RIGHT2, RIGHT3
Left	1 PART	

SAMPLING

Resolution	16bit; 44.1KHz	
File Import	AIFF, WAV	
RAM Capacity	1MByte	11.8sec
Expanded Capacity	9M/17M/33M/65MByte	106.9/202.1/392.3/772.7sec
Record Time	380sec max	When 16MB or 32MB SIMMs are installed.

EFFECTS

Reverb	29 Preset + 3 User	
Chorus	25 Preset + 3 User	
DSP Effect	164 Preset	for styles and songs
DSP Effect	(164 Preset + 10 User) x 4 Blocks	for R1, R2, R3, LEFT
DSP Effect	84 Preset + 10 User	for Mic/Line In
DSP Variation	Slow/Fast	for R1, R2, R3, LEFT
POLY/MONO	Yes	
Vocal Harmony	49 Preset + 10 User	2 Polyphony
Harmony/Echo	17Preset	
Master EQ	2 Preset + 2 User	5-band
Part EQ	29 PART	2-band, 29 PART (R1, R2, R3, LEFT, ACMP x 8, SONG x 16, M.PAD)
Touch Response	5 Preset	
Tempo	32~280	
Transpose	-24~0~24	
Tuning	414.6~440Hz~466.8	
Octave	-1, 0, +1	only for Upper
Pitch Bend	Wheel	
Modulation	Wheel	
Left Hold	Yes	

AUTO ACCOMPANIMENT

Preset	125	
Flash	85	max 120 styles or up to 1.8MByte
Disk	66 (included in the accessory disk)	DISK DIRECT function is available.
Format	Style File Format	
Control	INTRO x 3	
	FILL IN x 4	
	BREAK FILL x 1	
	MAIN x 4	
	ENDING x 3	
	FADE IN/OUT	
	TAP TEMPO	
	FINGERING	Single Finger, Multi Finger, Fingered, Fingered Pro, On Bass, On Bass Pro, Full Keyboard

ONE TOUCH SETTING

	4/Style	Full programmable

MUSIC DATABASE

	616 max	Full programmable

MULTI PADS

	4 Pads x 60 banks	58 Multi Pad bank, 1 MIDI Control bank, 1 Scale Tune bank

SONGS

Playback	Disk Direct Playback	with Ultra Quick Start function
Track	16	
Recording	1 song	Quick Record, Multi Track Record
RAM Capacity	300kbyte	Approximately 38,000 notes max.

REGISTRATION MEMORY

	512	8 buttons x 64 banks, Freeze function

LANGUAGE

	5 languages	English, German, French, Spanish, Italian

DISPLAY

	Backlit graphic LCD	240 x 320 dots; video out capability

DISK STORAGE

Floppy Disk Drive	3.5" 2HD/2DD	
Built-in Hard Disk	Optional	IDE 2.5 inch, 8GByte max.
SCSI	Optional	Hard Disk, ZIP, MO 8GByte max./each device

DEMO SONGS

	15 songs	

CONNECTORS

MIDI	MIDI A (IN/OUT)	Switchable to TO HOST
	MIDI B (IN/OUT)	
	TO HOST	HOST SELECT SW (Mac/PC1/PC2/MIDI)
Foot Pedal	FOOT SWITCH1	
	FOOT SWITCH2	
	FOOT VOLUME	
SCSI	D-sub half pitch 50-pin	
VIDEO OUT	Pin type	NTSC/PAL Composite Signal
PC KEYBOARD	Mini DIN type	PC/AT Standard
Analog	PHONES	
	LOOP SEND (L/L+R, R)	
	LINE OUT MAIN (L/L+R, R), SUB (1/2)	
	AUX IN/LOOP RETURN (L/L+R, R), TRIM VOL	
	MIC/LINE IN	LEVEL (MIC1/MIC2/LINE), INPUT VOLUME, Indicator

AMPLIFIER

	28 W x 2	

SPEAKERS

Size	13 cm x 2, 3 cm x 2	
Enclosure	Wooden	Bass Reex, 6.0 liters x 2

POWER SUPPLY

Power Consumption	65 W	

WEIGHT

	22.5 Kg (49 lbs. 10 oz)	

DIMENSIONS

W x H x D	1114 x 464.9 x 182.5 mm (43-7/8" x 18-5/16" x 7-3/16")	without Music Stand

SUPPLIED ACCESSORIES

Music Stand	1	
AC Power Cord	1	
AC Plug Adaptor	1	in applicable areas only
Floppy Disk	1	Disk Styles
Owner's Manual	1	

OPTIONAL ACCESSORIES

Foot Switch	FC5	
Foot Volume	FC7	
Headphones	HPE-150,160	
Mic	MZ106s	Dynamic Microphone IMP.250 ohm
Keyboard Stand	L-7	
Hard Disk	2.5inch IDE	Height 12.5 mm max, 8GByte max
SIMM	4M/8M/16M/32MByte	72pin SIMM, 16bit BUS, JEDEC
SCSI Device	SCSI-2	Hard Disk, ZIP, MO, 8GByte max per device
PC Keyboard		
CRT Display		

■PANEL LAYOUT

●Rear View

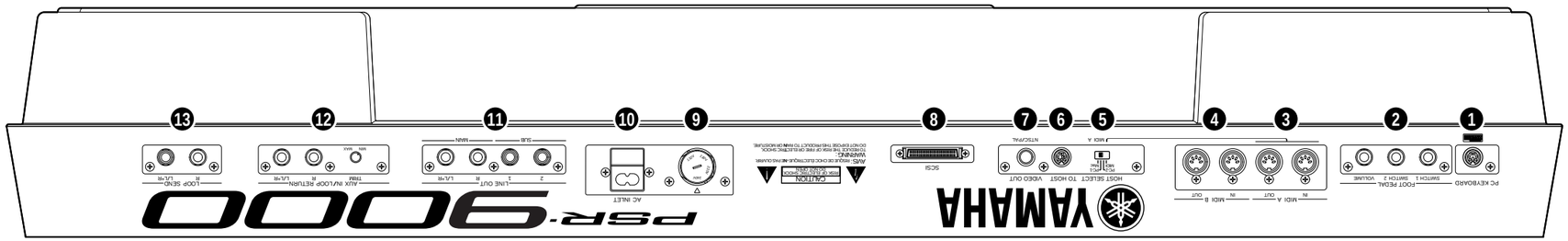

1. PC KEYBOARD jack
2. FOOT PEDAL jacks (SWITCH 1, SWITCH 2, VOLUME)
3. MIDI A jacks (IN, OUT)
4. MIDI B jacks (IN, OUT)
5. HOST SELECT switch
6. TO HOST jack
7. VIDEO OUT jack
8. SCSI jack
9. Voltage selector
10. AC INLET jack
11. LINE OUT jacks
    MAIN (R, L/L+R)
    SUB (1, 2)
12. AUX IN/LOOP RETURN jacks (TRIM, R, L/L+R)
13. LOOP SEND jacks (R, L/L+R)

●Top View

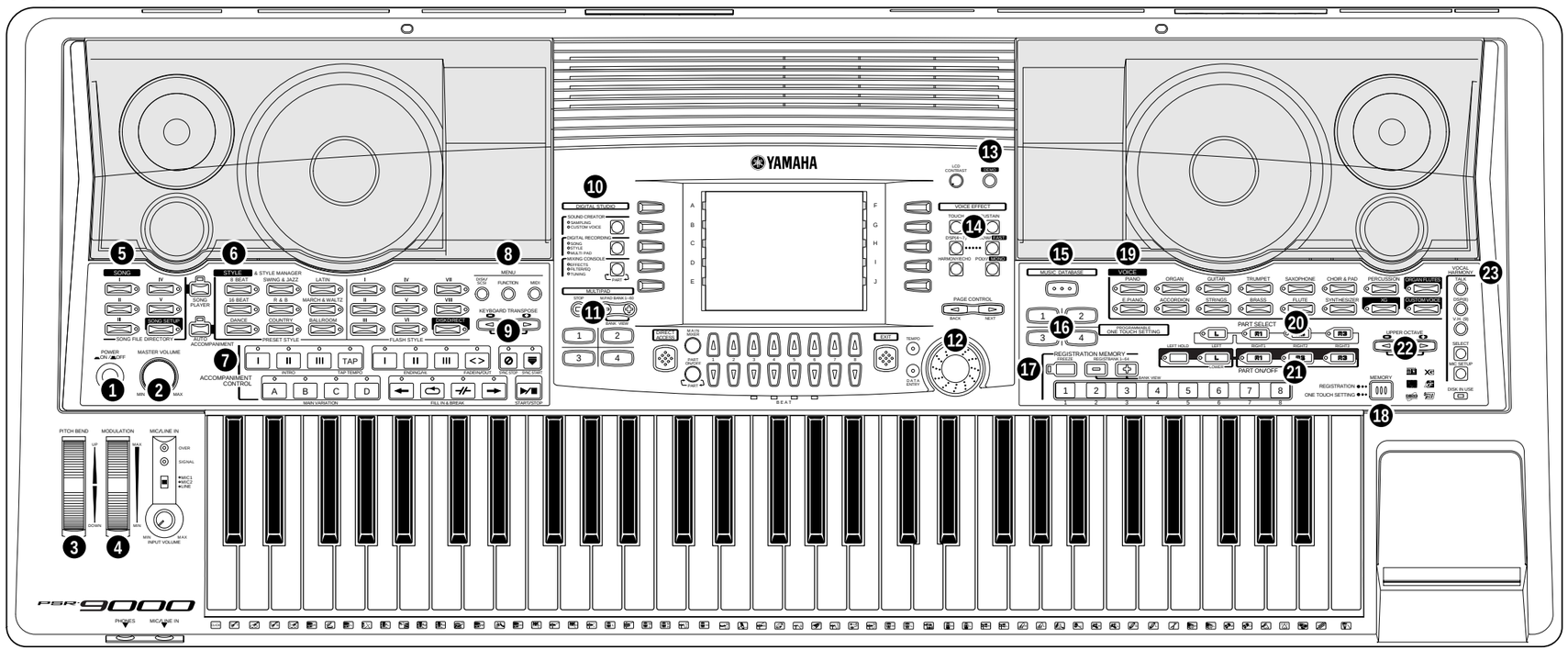

1. POWER ON/OFF switch
2. MASTER VOLUME control
3. PITCH BEND wheel
4. MODULATION wheel
5. SONG buttons
6. STYLE buttons
7. ACCOMPANIMENT CONTROL buttons
8. MENU buttons
9. KEYBOARD TRANSPOSE buttons
10. DIGITAL STUDIO buttons
11. MULTI PAD buttons
12. Data dial
13. DEMO button
14. VOICE EFFECT buttons
15. MUSIC DATABASE button
16. ONE TOUCH SETTING button
17. REGISTRATION MEMORY buttons
18. MEMORY button
19. VOICE buttons
20. PART SELECT buttons
21. PART ON/OFF buttons
22. UPPER OCTAVE buttons
23. VOCAL HARMONY buttons

■UNIT LAYOUT

●Upper Case (Top View)

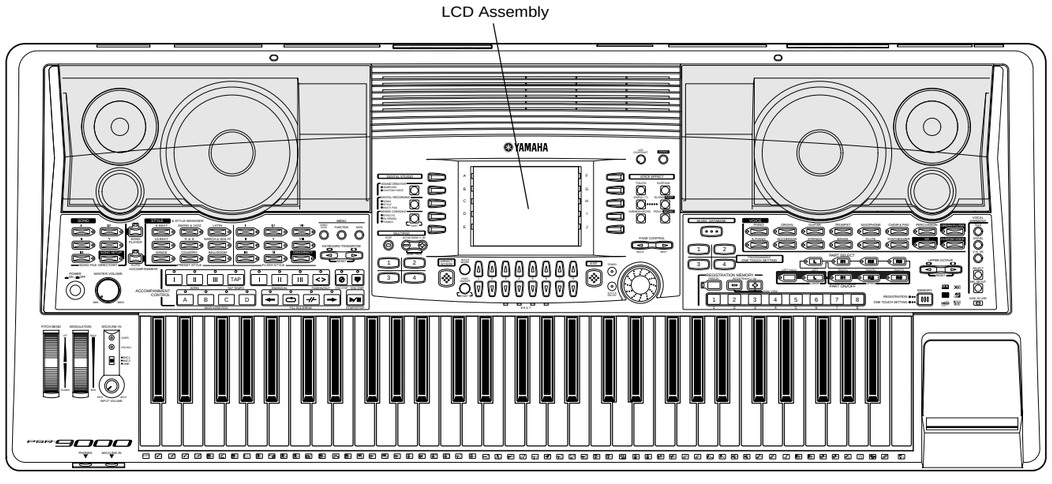

●Upper Case (Insid View 1)

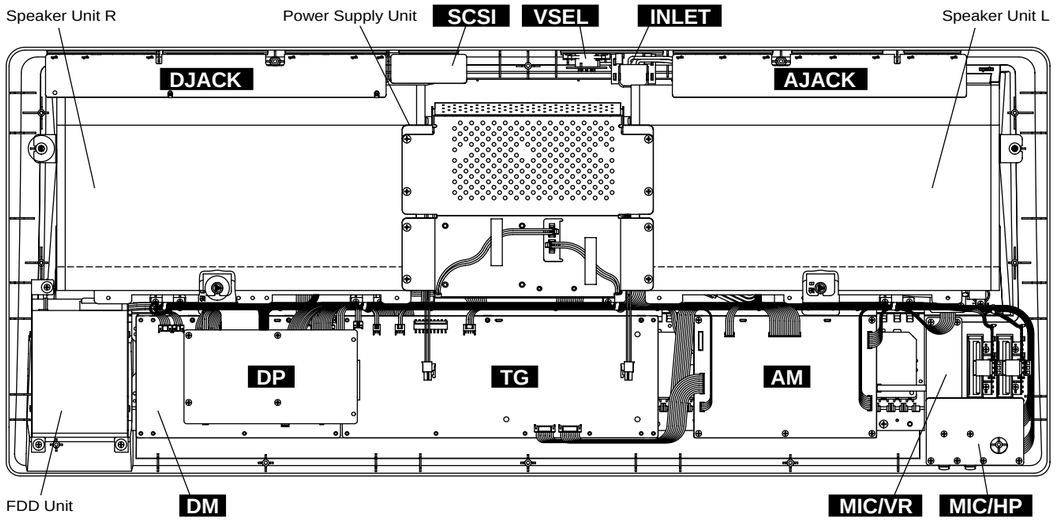

●Upper Case (Insid View 2)

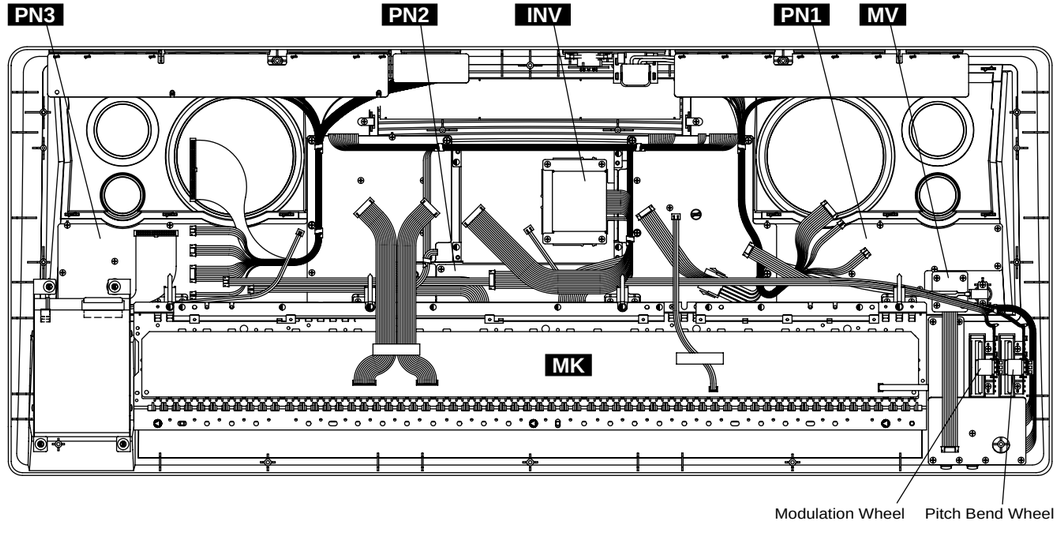

WIRING

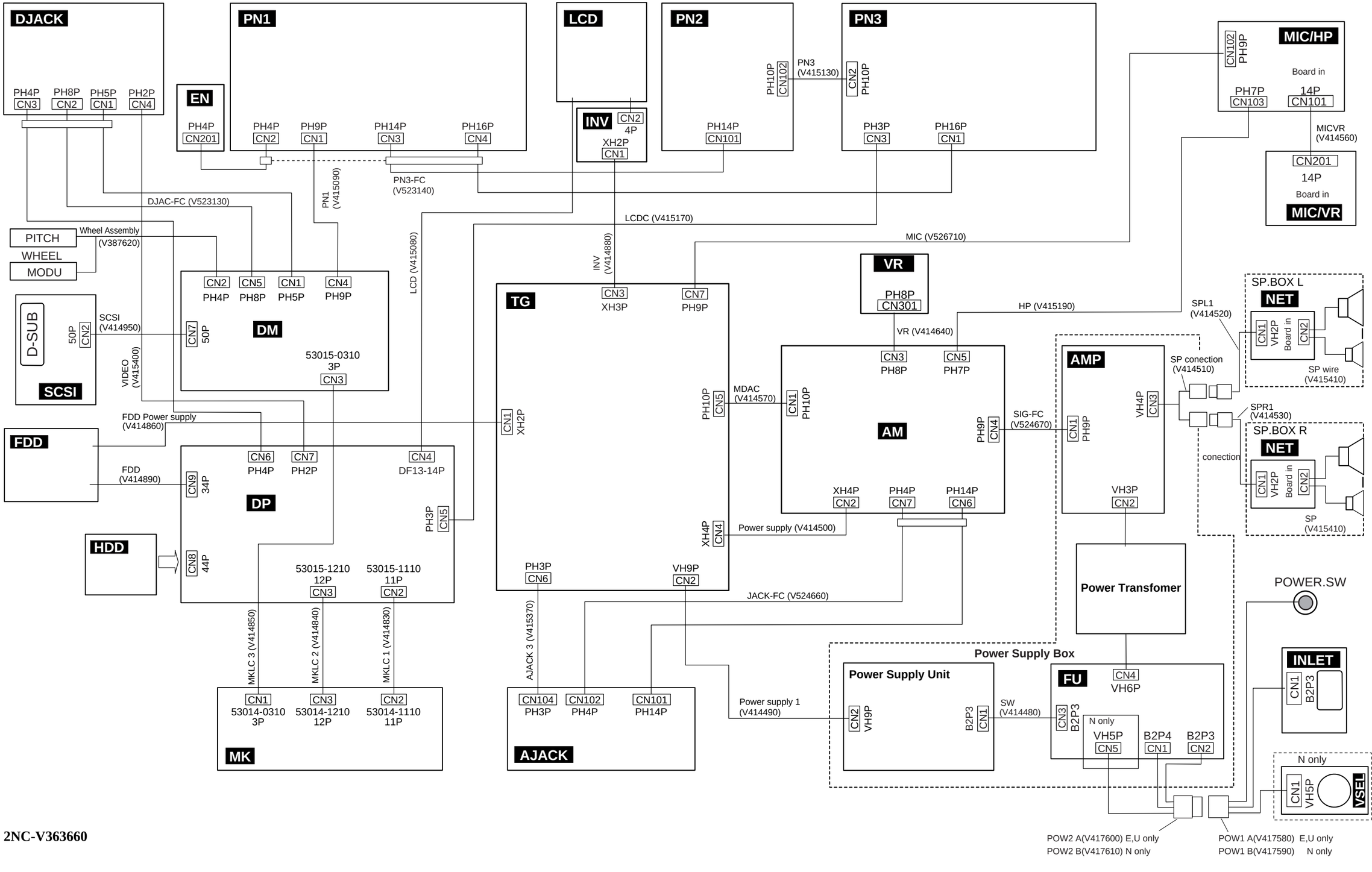
DJACK
PH4P CN3
PH8P CN2
PH5P CN1
PH2P CN4
EN
PH4P CN201
PN1
PH4P CN2
PH9P CN1
PH14P CN3
PH16P CN4
LCD
INV
CN2 4P
XH2P CN1
PN2
PH14P CN101
PH10P CN102
PN3 (V415130)
PN3
CN2 PH10P
PH3P CN3
PH16P CN1
MIC/HP
CN102 PH9P
Board in
PH7P CN103
14P CN101
MICVR (V414560)
CN201 14P
Board in
MIC/VR
PN3-FC (V523140)
PN1 (V415090)
DJAC-FC (V523130)
LCDC (V415170)
MIC (V526710)
PITCH
WHEEL
MODU
Wheel Assembly (V387620)
CN2 CN5 CN1 CN4
PH4P PH8P PH5P PH9P
DM
53015-0310 3P CN3
D-SUB
SCSI
50P CN2
SCSI (V414950)
CN7 50P
VIDEO (V415400)
LCD (V415080)
INV (V414880)
TG
CN3 XH3P
CN7 PH9P
VR
PH8P CN301
HP (V415190)
VR (V414640)
CN3 PH8P
CN5 PH7P
SPL1 (V414520)
SP.BOX L
NET
CN1 VH2P Board in CN2
SP wire (V415410)
AMP
SP conection (V414510)
SPR1 (V414530)
SP.BOX R
NET
conection
SP (V415410)
MDAC (V414570)
PH10P CN5
CN1 PH10P
AM
PH9P CN4
SIG-FC (V524670)
VH4P CN3
CN1 PH9P
VH3P CN2
XH4P CN2
PH4P CN7
PH14P CN6
Power supply (V414500)
XH4P CN4
FDD Power supply (V414860)
FDD
FDD (V414890)
CN9 34P
DP
CN6 PH4P
CN7 PH2P
CN4 DF13-14P
PH3P CN5
HDD
CN8 44P
53015-1210 12P CN3
53015-1110 11P CN2
MKLC 3 (V414850)
MKLC 2 (V414840)
MKLC 1 (V414830)
CN1 53014-0310 3P
CN3 53014-1210 12P
CN2 53014-1110 11P
MK
CN1 XH2P
PH3P CN6
VH9P CN2
AJACK 3 (V415370)
CN104 PH3P
CN102 PH4P
CN101 PH14P
AJACK
JACK-FC (V524660)
Power supply 1 (V414490)
Power Supply Box
Power Supply Unit
CN2 VH9P
B2P3 CN1
SW (V414480)
FU
CN4 VH6P
CN3 B2P3
N only
VH5P CN5
B2P4 CN1
B2P3 CN2
Power Transfomer
POWER.SW
INLET
CN1 B2P3
N only
CN1 VH5P VSEL
POW2 A(V417600) E,U only
POW2 B(V417610) N only
POW1 A(V417580) E,U only
POW1 B(V417590) N only

■BLOCK DIAGRAM

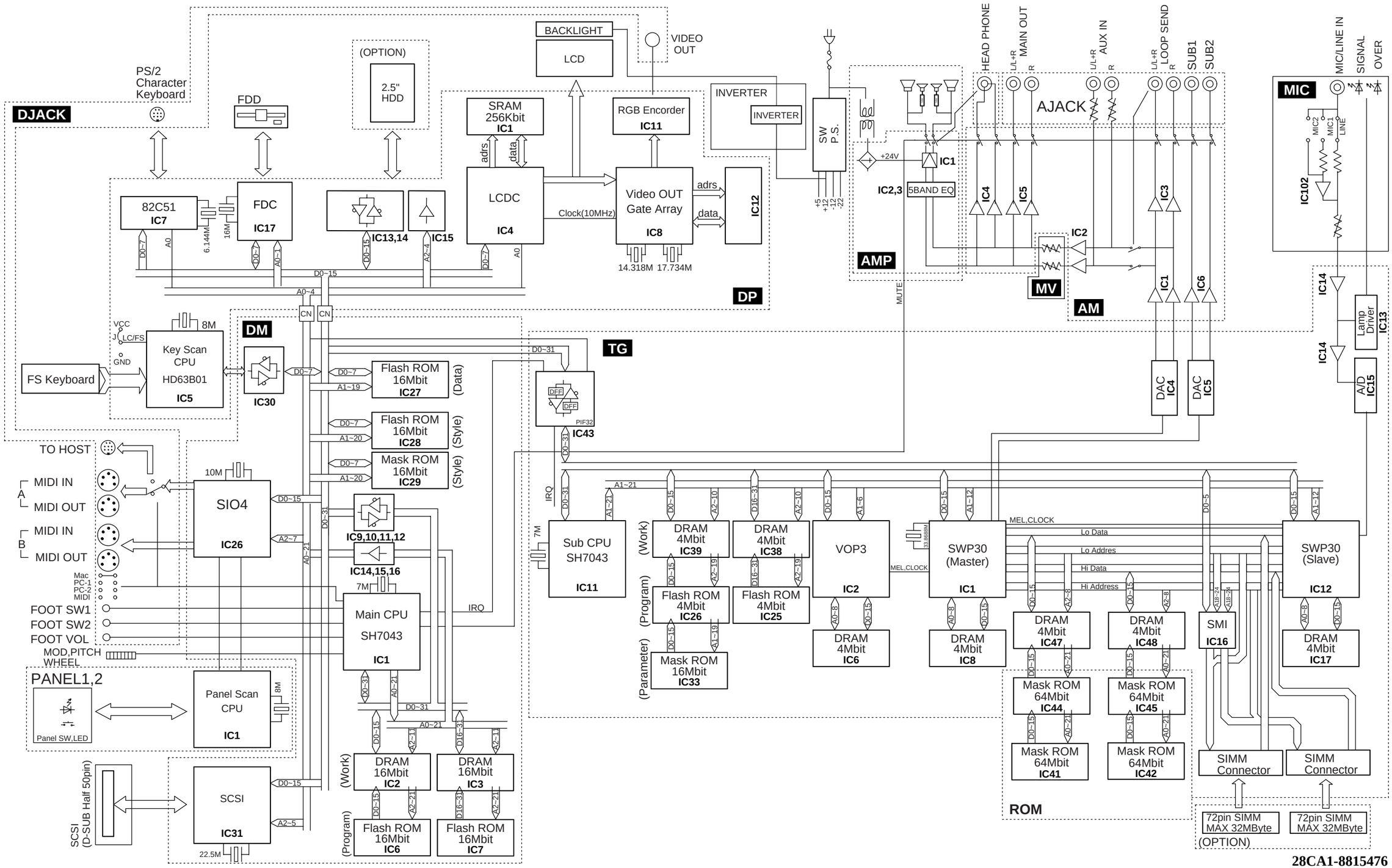

DISASSEMBLY PROCEDURE

1 Lower Case

1-1 Remove the twenty-eight (28) screws marked [310a] and the six (6) screws marked [380]. The lower case can then be removed. (Fig. 1)

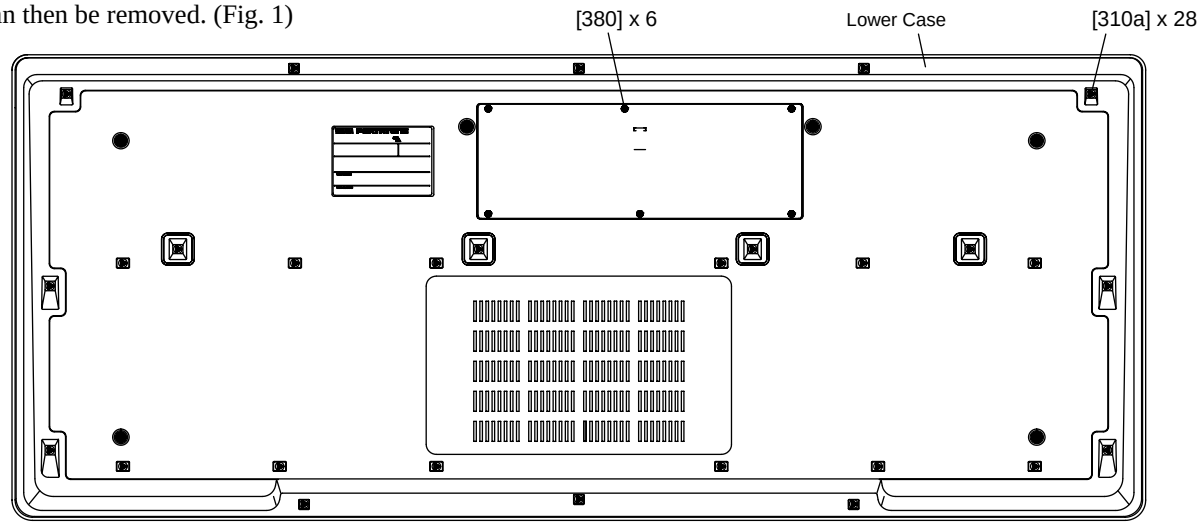

[310]: Bind Head Tapping Screw-B 4.0X14 MFZN2Y (EP600750)
[380]: Bonding Head Screw 3.0X8 MFZN2BL (VP157800)

(Fig. 1)

2 Circuit Board & Unit

After removing the lower case, remove the following screws. Each circuit board and unit can then removed. (Fig. 2)

Circuit Board & Unit	Ref. No.	Screw	Prat No.	QTY
MIC-HP Circuit Board	[480a]	Bind Head Tapping Screw-B 3.0X8 MFZN2Y	EP600250	6
MIC-VR Circuit Board	[480b]	Bind Head Tapping Screw-B 3.0X8 MFZN2Y	EP600250	4
(INPUT VOLUME)	[770]	VR Knob	V2300100	1
AJACK Circuit Board	[700a]	Bind Head Tapping Screw-B 3.0X10 MFZN2BL	EP600140	8
DJACK Circuit Board	[700b]	Bind Head Tapping Screw-B 3.0X10 MFZN2BL	EP600140	10
SCSI Circuit Board	[730]	Pan Head Screw 2.5X6 MFZN2BL	VS206600	2
PITCH BEND Wheel	[480c]	Bind Head Tapping Screw-B 3.0X8 MFZN2Y	EP600250	2
MODULATION Wheel	[480d]	Bind Head Tapping Screw-B 3.0X8 MFZN2Y	EP600250	2
AM Circuit Board	[40a]	Bind Head Tapping Screw-B 3.0X10 MFZN2BL	EP600140	8
POWER SUPPLY UNIT	[330]	Bind Head Screw-1 4.0X12 MFZN2Y	EG340030	8

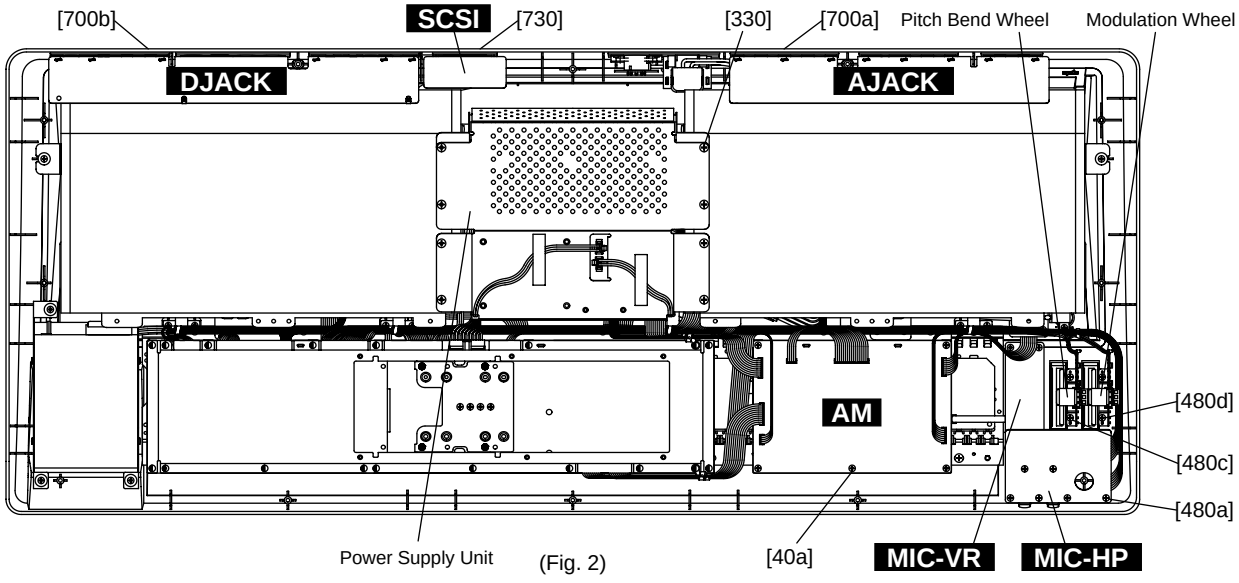

(Fig. 2)

3 AMP Circuit board

3-1 Remove the lower case. (See procedure 1.)
3-2 Remove the power supply unit. (See procedure 2.)
3-3 Remove the two (2) screws marked [50a]. The power supply cover can then be removed. (Fig. 3)
3-4 Remove the eight (8) screws marked [50b]. The AMP circuit board can then be removed. (Fig. 3)

4 FU Circuit Board

4-1 Remove the lower case. (See procedure 1.)
4-2 Remove the power supply unit. (See procedure 2.)
4-3 Remove the power supply cover. (See procedure 3-3.)
4-4 Remove the four (4) screws marked [50c]. The FU circuit board can then be removed. (Fig. 4)

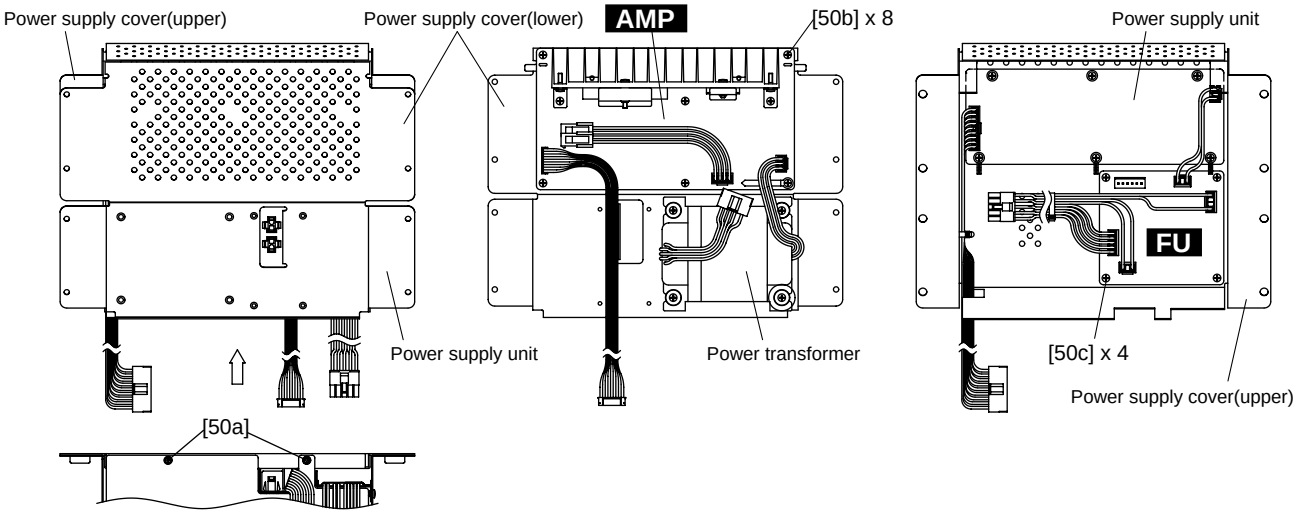

[50]: Bind Head Tapping Screw-B 3.0X6 MFZN2Y (EP600130)
(Fig. 3)

5 LCD Assembly

5-1 Remove the lower case. (See procedure 1.)
5-2 Remove the power supply unit. (See procedure 2.)
5-3 Remove the four (4) screws marked [70a]. The LCD assembly can then be removed. (Fig. 4)

6 INV Circuit Board

6-1 Remove the lower case. (See procedure 1.)
6-2 Remove the power supply unit. (See procedure 2.)
6-3 Remove the four (4) screws marked [70b] and INV cover. The INV circuit board can then be removed. (Fig. 4)

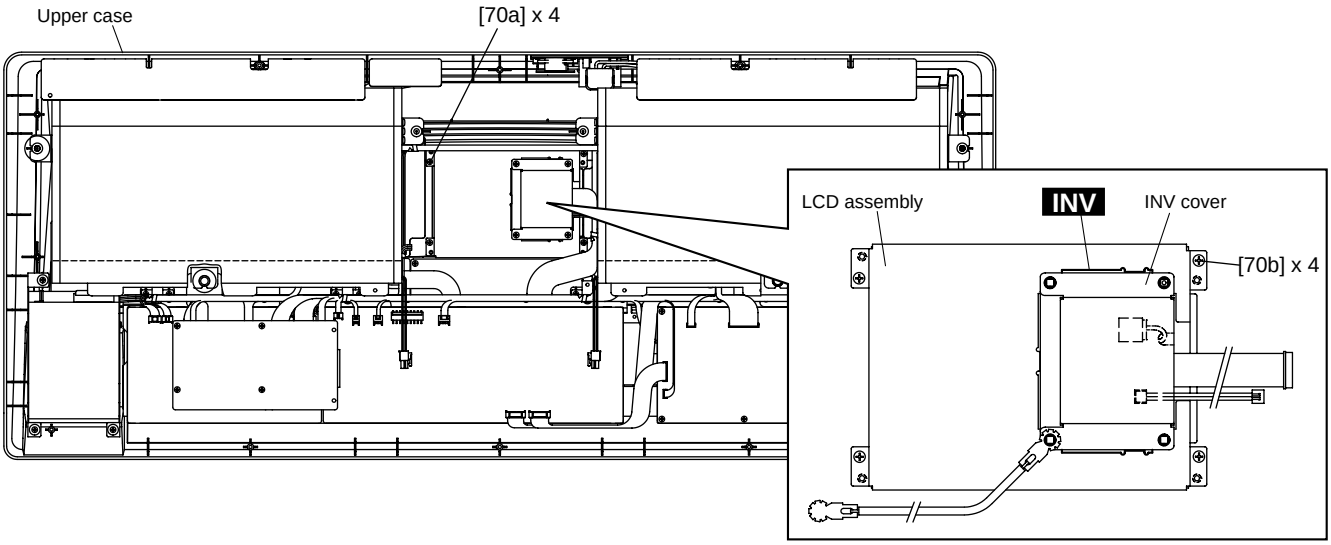

[70]: Bind Head Tapping Screw-B 3.0X6 MFZN2BL (EP600230)
(Fig. 4)

7 Speaker Box Unit Left and Right

7-1 Remove the lower case. (See procedure 1.)
7-2 Remove the power supply unit. (See procedure 2.)
7-3 Remove the two (2) screws marked [310b] and the four (4) screws marked [110a]. The left and right speaker box units can then be removed. (Fig. 5)

8 Woofer

8-1 Remove the lower case. (See procedure 1.)
8-2 Remove the power supply unit. (See procedure 2.)
8-3 Remove the left and right speaker box units. (See procedure 7.)
8-4 Remove the four (4) screws marked [60]. The woofer can then be removed. (Fig. 5)

9 Tweeter

9-1 Remove the lower case. (See procedure 1.)
9-2 Remove the power supply unit. (See procedure 2.)
9-3 Remove the left and right speaker box units. (See procedure 7.)
9-4 Remove the four (4) screws marked [65]. The tweeter can then be removed. (Fig. 5)

10 NET Circuit Board

10-1 Remove the lower case. (See procedure 1.)
10-2 Remove the power supply unit. (See procedure 2.)
10-3 Remove the left and right speaker box units. (See procedure 7.)
10-4 Remove the woofer. (See Procedure 8.)
10-5 Remove the four (4) supports marked [A]. The NET circuit board can then be removed. (Fig. 5)

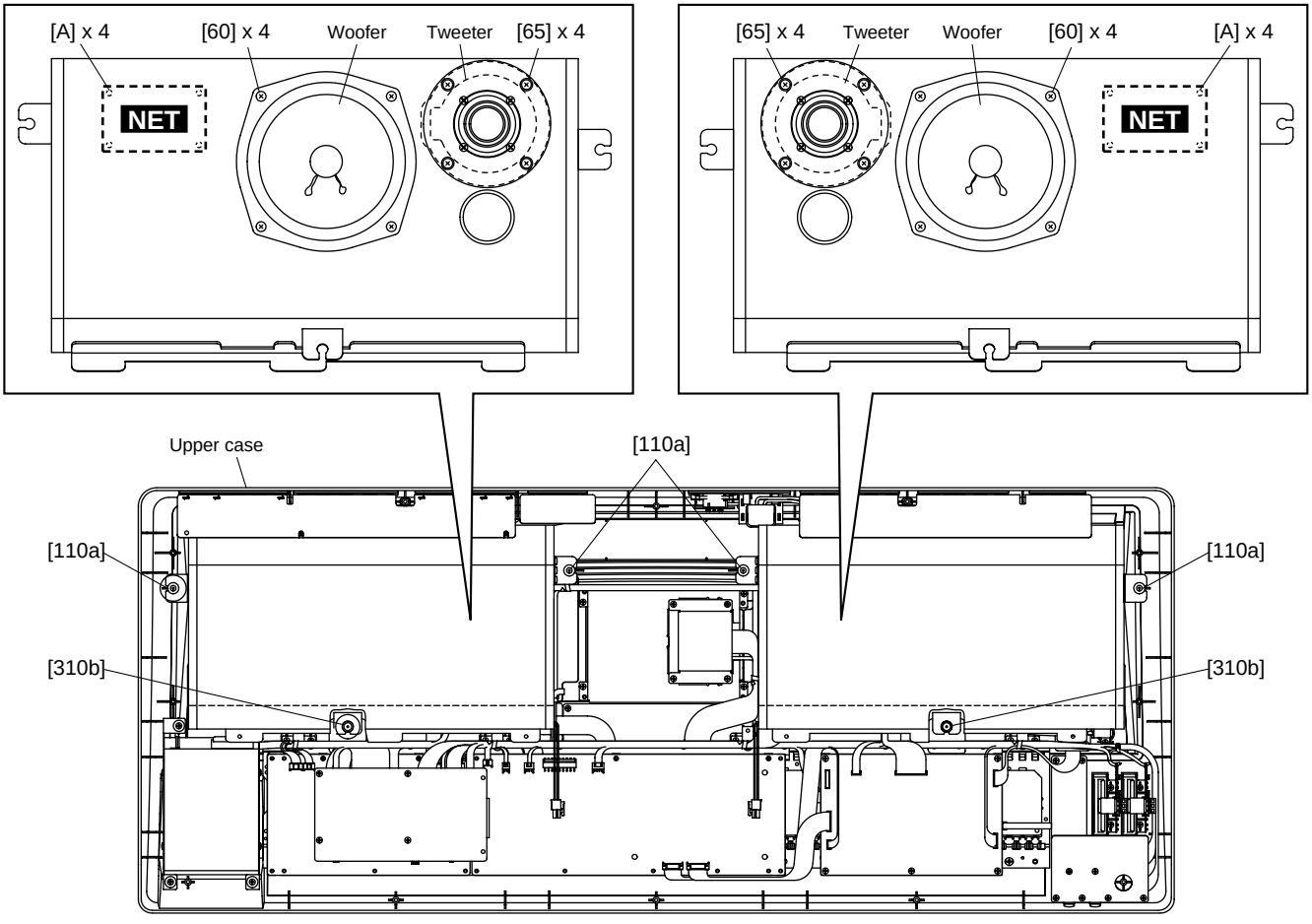

[60]: Bind Head Tapping Screw-1 3.0X12 MFZN2BL (EP030340)
[65]: Bind Head Tapping Screw-1 3.5X16 MFZN2BL (EP030260)
[110]: Pan Head Sems Tapping Screw 3.0X10 (V5115200)
[310]: Bind Head Tapping Screw-B 4.0X14 MFZN2Y (EP600750)

(Fig. 5)

11 FDD Unit
11-1 Remove the lower case. (See procedure 1.)
11-2 Remove the power supply unit. (See procedure 2.)
11-3 Remove the right speaker box unit. (See procedure 7.)
11-4 Remove the four (4) screws marked [110b]. The FDD unit can then be removed. (Fig. 6)

12 MV Circuit Board
12-1 Remove the lower case. (See procedure 1.)
12-2 Remove the power supply unit. (See procedure 2.)
12-3 Remove the left speaker box unit. (See procedure 7.)
12-4 Remove the four (4) screws marked [480e] and the MASTER VOLUME knob. The MV circuit board can then be removed. (Fig. 6)

13 INLET Circuit Board and VSEL Circuit Board
13-1 Remove the lower case. (See procedure 1.)
13-2 Remove the power supply unit. (See procedure 2.)
13-3 Remove the left speaker box unit. (See procedure 7.)
13-4 Remove the two (2) screws marked [480f] and the POWER knob. The power switch can then be removed.
13-5 Remove the two (2) screws marked [700c]. The INLET circuit board can then be removed. (Fig. 6)
13-6 Remove the two (2) screws marked [700d]. The VSEL circuit board can then be removed. (Fig. 6)

14 DP Circuit Board
14-1 Remove the lower case. (See procedure 1.)
14-2 Remove the eighteen (18) screws marked [40d]. The lower shield box can then be removed. (Fig. 6)
14-3 Remove the four (4) screws marked [440]. The DP circuit board can then be removed. (Fig. 6)

15 DM Circuit Board and TG Circuit Board
15-1 Remove the lower case. (See procedure 1.)
15-2 Remove the DP circuit board. (See procedure 14.)
15-3 Remove the screw marked [40c]. The DM circuit board and TG circuit board can then be removed. (Fig. 6)
N.B.: As the DM and TG circuit boards are connected, they can not be removed separateiy.

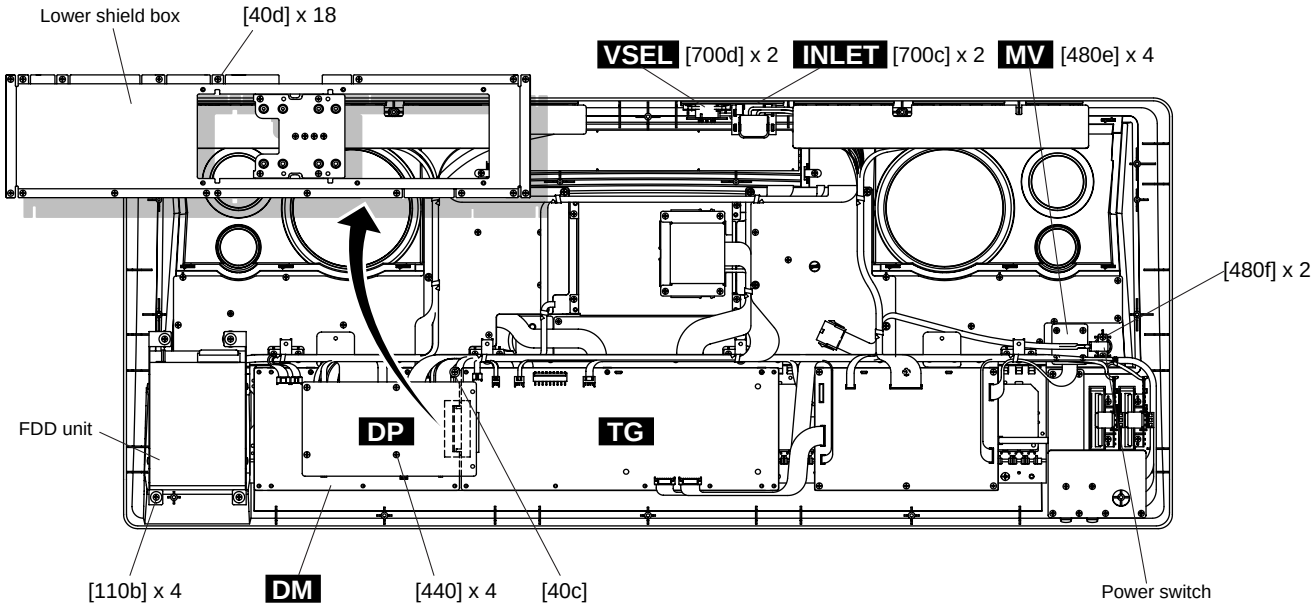

[40]: Bind Head Tapping Screw-B 4.0X10 MFZN2Y (EP600250)
[110]: Pan Head Sems Tapping Screw 3.0X10 (V5115200)
[440]: Bind Head Screw 3.0X8 MFNI33 (VB748400)
[480]: Bind Head Tapping Screw-B 3.0X8 MFZN2Y (EP600250)
[700]: Bind Head Tapping Screw-B 3.0X10 MFZN2BL (EP600140)

(Fig. 6)

16 Keyboard Assembly

16-1 Remove the lower case. (See procedure 1.)
16-2 Remove the DP circuit board. (See procedure 14.)
16-3 Remove the DM circuit board and TG circuit board. (See procedure 15.)
16-4 Remove the AM circuit board. (See procedure 2.)
16-5 Remove the five (5) screws marked [40e]. The DM circuit board holder can then be removed. (Fig. 7)
16-6 Remove the three (3) screws marked [40f]. The AM shield cover can then be removed. (Fig. 7)
16-7 Remove the three (3) screws marked [50d] and the four (4) screws marked [40g]. The keyboard assembly can then be removed. (Fig. 7)

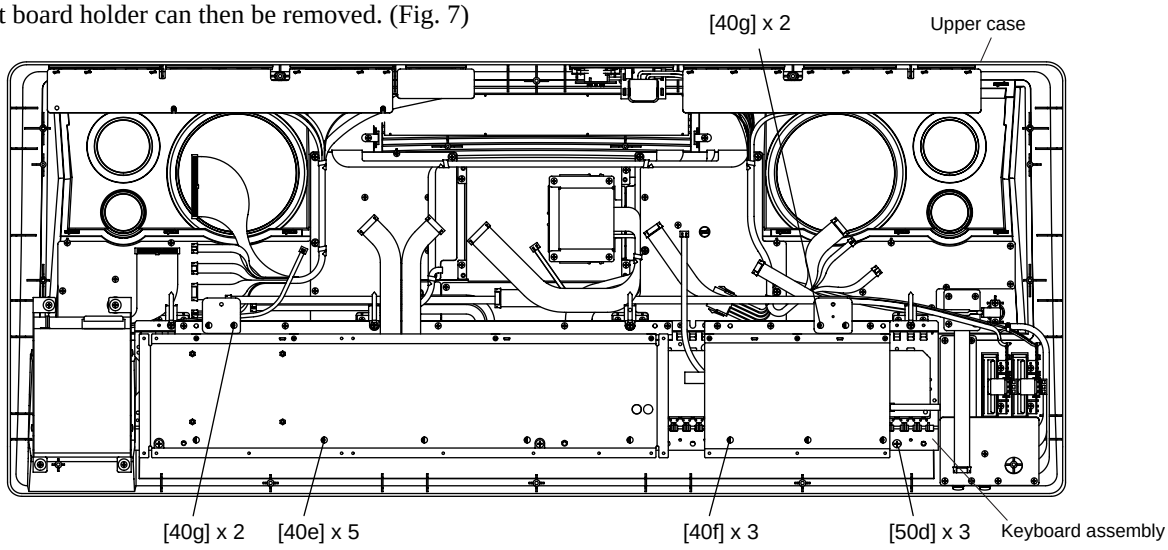

[40]: Bind Head Tapping Screw-B 3.0X8 MFZN2Y (EP600250)
[50]: Bind Head Tapping Screw-B 3.0X6 MFZN2Y (EP600130)

(Fig. 7)

17 MK Circuit Board

17-1 Remove the lower case. (See procedure 1.)
17-2 Remove the DP circuit board. (See procedure 14.)
17-3 Remove the DM circuit board and TG circuit board. (See procedure 15.)
17-4 Remove the AM circuit board. (See procedure 2.)
17-5 Remove the AM shield cover. (See procedure 16.)
17-6 Remove the eighteen (18) screws marked [5]. The MK circuit board can then be removed. (Fig. 8)

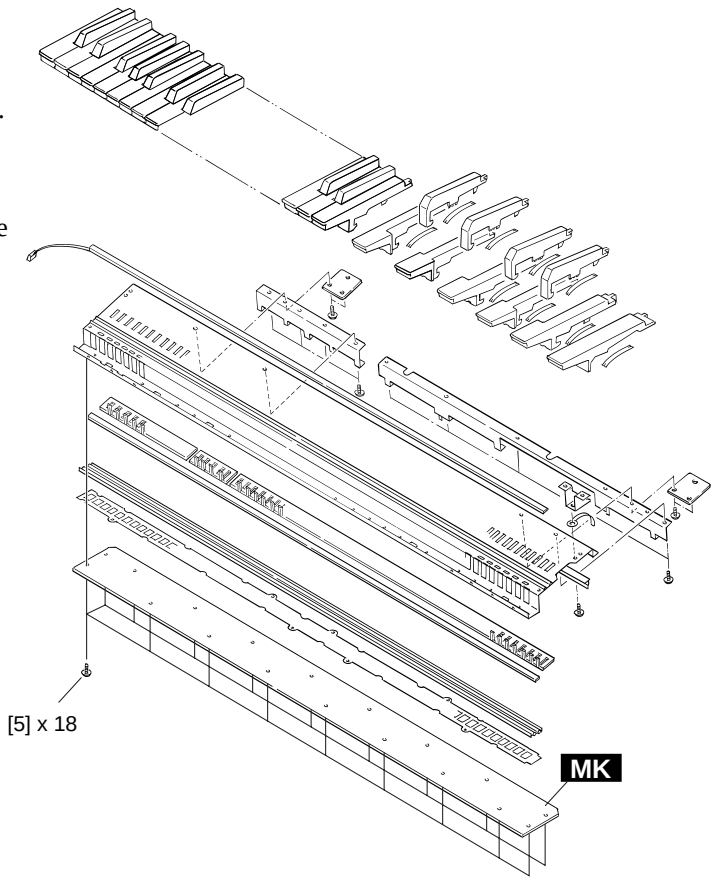

[5]: Bind Head Tapping Screw-S 3.0X10 MFZN2Y (EP630630)

(Fig. 8)

18 EN Circuit Board

18-1 Remove the lower case. (See procedure 1.)
18-2 Remove the DP circuit board. (See procedure 14.)
18-3 Remove the DM circuit board and TG circuit board. (See procedure 15.)
18-4 Remove the keyboard assembly. (See procedure 16.)
18-5 Remove the encoder knob and the hexagonal nut marked [B]. The EN circuit board can then be removed. (Fig. 9)

19 PN1 Circuit Board

19-1 Remove the lower case. (See procedure 1.)
19-2 Remove the power supply unit. (See procedure 2.)
19-3 Remove the left and right speaker box units. (See procedure 7.)
19-4 Remove the DP circuit board. (See procedure 14.)
19-5 Remove the DM circuit board and TG circuit board. (See procedure 15.)
19-6 Remove the keyboard assembly. (See procedure 16.)
19-7 Remove the eighteen (18) screws marked [480f]. The PN1 circuit board can then be removed. (Fig. 9)

20 PN2 Circuit Board

20-1 Remove the lower case. (See procedure 1.)
20-2 Remove the power supply unit. (See procedure 2.)
20-3 Remove the left and right speaker box units. (See procedure 7.)
20-4 Remove the DP circuit board. (See procedure 14.)
20-5 Remove the DM circuit board and TG circuit board. (See procedure 15.)
20-6 Remove the keyboard assembly. (See procedure 16.)
20-7 Remove the EN circuit board. (See procedure 18.)
20-8 Remove the six (6) screws marked [480g]. The PN2 circuit board can then be removed. (Fig. 9)

21 PN3 Circuit Board

21-1 Remove the lower case. (See procedure 1.)
21-2 Remove the power supply unit. (See procedure 2.)
21-3 Remove the left and right speaker box units. (See procedure 7.)
21-4 Remove the DP circuit board. (See procedure 14.)
21-5 Remove the DM circuit board and TG circuit board. (See procedure 15.)
21-6 Remove the keyboard assembly. (See procedure 16.)
21-7 Remove the eighteen (18) screws marked [480h]. The PN3 circuit board can then be removed. (Fig. 9)

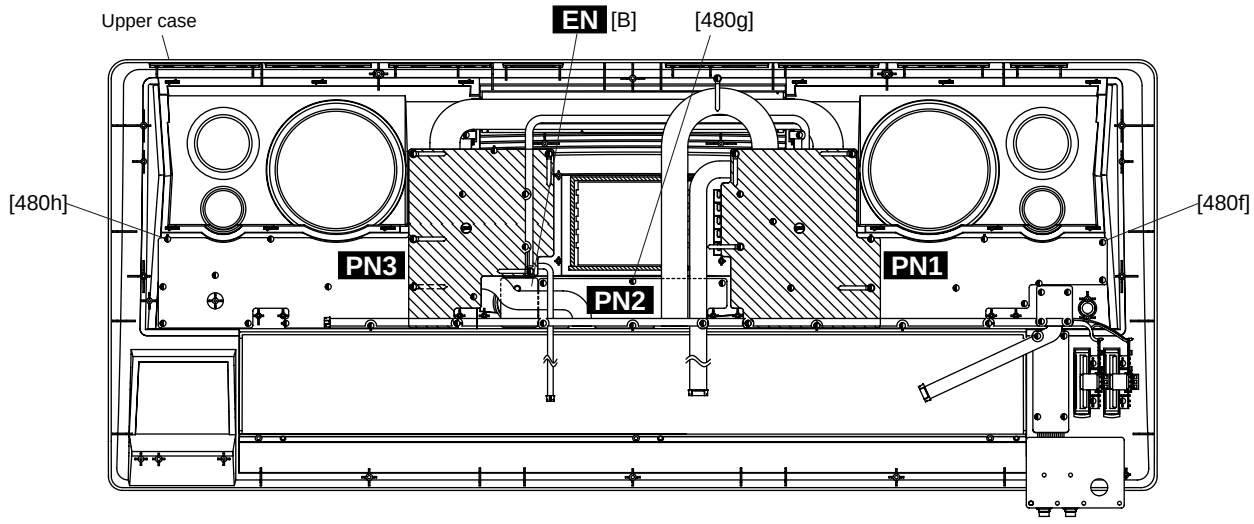

[480]: Bind Head Tapping Screw-B 3.0X8 MFZN2Y (EP600250)
(Fig. 9)

LSI PIN DISCRIPTION

CONTENTS

D65621GF-028-3B9	XS370A00	SMI	Page 15
HD6437043AE00F	XW795A00	CPU	Page 16
TC203C760HF-002	XS725A00	SWB30B	Page 17
YSS236-F	XT013A00	VOP3	Page 18
SED1335F0B	XQ595A00	LCDC	Page 19
MBCG46183-129	XV833A00	GATE ARRAY	Page 19
MN101C027YB	XS711200	CPU	Page 20
MSM82C51A-2GS-K	XV513A00	USART	Page 20
HD63266F	XI939A00	FDC	Page 21
PCM1716E/T2	XU829A00	DAC	Page 21
1414-AAPI	XV481B00	GATE ARRAY	Page 22
AK5351-VF-E2	XV510A00	DAC	Page 22
SPC7212F0A	XV636B00	SCSI2 Interface Controller	Page 23

• **D65621GF-028-3B9** (XS370A00) **SMI** TG: IC16

PIN No.	NAME	I/O	FUNCTION	PIN No.	NAME	I/O	FUNCTION
1	LMA24	I	Low Memory Address	41	VDD	-	
2	LMA23	I	Low Memory Address	42	L1RAS2	O	RAS2 for LoMem SIMM 1
3	LMA22	I	Low Memory Address	43	L1RAS3	O	RAS3 for LoMem SIMM 1
4	LMA21	I	Low Memory Address	44	GND	-	
5	LMA20	I	Low Memory Address	45	HDRAS0	O	RAS for HiMem DRAM 0
6	LMA19	I	Low Memory Address	46	HDRAS1	O	RAS for HiMem DRAM 1
7	LMA18	I	Low Memory Address	47	GND	-	
8	HMA24	I	High Memory Address	48	VDD	-	
9	HMA23	I	High Memory Address	49	LDRAS0	O	RAS for LoMem DRAM 0
10	HMA22	I	High Memory Address	50	LDRAS1	O	RAS for LoMem DRAM 1
11	HMA21	I	High Memory Address	51	LMA1	I	Low Memory Address
12	GND	-	No.12	52	LMA0	I	Low Memory Address
13	HMA20	I	High Memory Address	53	GND	-	No.53
14	HMA19	I	High Memory Address	54	LMA1X	O	Low Memory Address Exchanged
15	HMA18	I	High Memory Address	55	LMA0X	O	Low Memory Address Exchanged
16	RASN	I	Row Address Strobe	56	GND	-	
17	H0RAS0	O	RAS0 for HiMem SIMM 0	57	VDD	-	
18	H0RAS1	O	RAS1 for HiMem SIMM 0	58	HMA1	I	High Memory Address
19	GND	-		59	HMA0	I	High Memory Address
20	H0RAS2	O	RAS2 for HiMem SIMM 0	60	HMA1X	O	High Memory Address Exchanged
21	H0RAS3	O	RAS3 for HiMem SIMM 0	61	HMA0X	O	High Memory Address Exchanged
22	GND	-		62	D0	I	Data Input
23	VDD	-		63	D1	I	Data Input
24	L0RAS0	O	RAS0 for LoMem SIMM 0	64	GND	-	
25	L0RAS1	O	RAS1 for LoMem SIMM 0	65	D2	I	Data Input
26	GND	-		66	D3	I	Data Input
27	L0RAS2	O	RAS2 for LoMem SIMM 0	67	D4	I	Data Input
28	L0RAS3	O	RAS3 for LoMem SIMM 0	68	D5	I	Data Input
29	GND	-		69	A2	I	Address
30	VDD	-		70	WRN	I	Write
31	H1RAS0	O	RAS0 for HiMem SIMM 1	71	GND	-	No.71
32	H1RAS1	O	RAS1 for HiMem SIMM 1	72	VDD	-	No.72
33	GND	-		73	CSN	I	Chip Select
34	VDD	-		74	A0	I	Address
35	H1RAS2	O	RAS2 for HiMem SIMM 1	75	A1	I	Address
36	H1RAS3	O	RAS3 for HiMem SIMM 1	76	MCLK	I	Clock (37MHz)
37	GND	-		77	SYI	I	Sync Clock (48kHz)
38	L1RAS0	O	RAS0 for LoMem SIMM 1	78	HBANK	O	HiMem Bank Select 01/23
39	L1RAS1	O	RAS1 for LoMem SIMM 1	79	LBANK	O	LoMem Bank Select 01/23
40	GND	-		80	REFRN	O	Refresh Timing

• HD6437043AE00F (XW795A00) CPU

DM: IC1 / TG: IC11

PIN No.	NAME	I/O	FUNCTION	PIN No.	NAME	I/O	FUNCTION
1	/WRHH	O	HH write	73	D15	I/O	Data bus
2	DACK0	O	DAM transfer strobe	74	D14	I/O	
3	/WRHL	O	HL write	75	D13	I/O	
4	/CASHH	O	HH Column address strobe	76	D12	I/O	
5	PE15	I/O	Port E	77	VCC	I	Power supply
6	VSS	I	Ground	78	D11	I/O	Data bus
7	A0	O	Address bus	79	VSS	I	Ground
8	A1	O		80	D10	I/O	Data bus
9	A2	O		81	D9	I/O	
10	A3	O		82	D8	I/O	
11	A4	O		83	D7	I/O	
12	VCC	I	Power supply	84	D6	I/O	
13	A5	O	Address bus	85	VCC	I	Power supply
14	VSS	I	Ground	86	D5	I/O	Data bus
15	A6	O	Address bus	87	VSS	I	Ground
16	A7	O		88	D4	I/O	Data bus
17	A8	O		89	D3	I/O	
18	A9	O		90	D2	I/O	
19	A10	O		91	D1	I/O	
20	A11	O		92	D0	I/O	
21	A12	O		93	VSS	I	Ground
22	A13	O		94	XTAL	I	Crystal oscillator
23	A14	O		95	MD3	I	Mode select
24	A15	O		96	EXTAL	I	Crystal oscillator
25	A16	O		97	MD2	I	Mode select
26	VCC	I	Power supply	98	NMI	-	Non-maskable interrupt
27	A17	O	Address bus	99	VCC	I	Power supply
28	VSS	I	Ground	100	PA16	I/O	Port A
29	/CASHL	O	HL Column address strobe	101	PA17	I/O	Port A
30	PA19	I/O	Port A	102	MD1	I	Mode select
31	/RAS	O	Row address strobe	103	MD0	I	Mode select
32	/CASL	O	Column address strobe (low)	104	PLLVCC	I	PLL Power supply
33	PA18	I/O	Port A	105	PLLCAP	I	PLL capacitor
34	/CASH	O	Column address strobe (high)	106	PLLVSS	I	PLL Ground
35	VSS	I	Ground	107	PA15	I/O	Port A
36	RDWR	O	DRAM read/write	108	/RES	I	Reset
37	A18	O	Address bus	109	/DREQ0	I	DMA transfer request
38	A19	O		110	TIOC0B	I/O	MTU input capture/output comp
39	A20	O		111	PE2	I/O	Port E
40	VCC	I	Power supply	112	VCC	I	Power supply
41	A21	O	Address bus	113	PE3	I/O	Port E
42	VSS	I	Ground	114	PE4	I/O	
43	/RD	O	Read	115	PE5	I/O	
44	/WDTOVF	O	Watch dog timer overflow	116	PE6	I/O	
45	D31	I/O	Data bus	117	VSS	I	Ground
46	D30	I/O	Data bus	118	AN0	I	Analog input
47	/WRH	O	High write	119	AN1	I	
48	/WRL	O	Low write	120	AN2	I	
49	/CS1	O	Chip select	121	AN3	I	
50	/CS0	O	Chip select	122	PF4	I/O	Port F
51	/IRQ3	I	Interrupt request	123	PF5	I/O	Port F
52	/IRQ2	I	Interrupt request	124	AVSS	I	Analog qround
53	/CS3	O	Chip select	125	PF6	I/O	Port F
54	/CS2	O	Chip select	126	PF7	I/O	Port F
55	VSS	I	Ground	127	AVREF	I	Analog reference Voltage
56	D29	I/O	Data bus	128	AVCC	I	Analog power supply
57	D28	I/O		129	VSS	I	Ground
58	D27	I/O		130	RxDO	I	Receive data
59	D26	I/O		131	TxDO	O	Transmit data
60	D25	I/O		132	/IRQ1	I	Interrupt request
61	VSS	I	Ground	133	RxD1	I	Receive data
62	D24	I/O	Data bus	134	PA4	I/O	Port A
63	VCC	I	Power supply	135	VCC	I	Power supply
64	D23	I/O	Data bus	136	SCK1	I/O	Serial clock
65	D22	I/O		137	PE7	I/O	Port E
66	D21	I/O		138	PE8	I/O	
67	D20	I/O		139	PE9	I/O	
68	D19	I/O		140	PE10	I/O	
69	D18	I/O		141	VSS	I	Ground
70	D17	I/O		142	TIOC3D	I/O	MTU input capture/output comp
71	VSS	I	Ground	143	PE12	I/O	Port EPort E

● **TC203C760HF-002** (XS725A00)
SWP30B (AWM Tone Generator coped with MEG) **Standard Wave Processor** TG: IC1

PIN No.	NAME	I/O	FUNCTION	PIN No.	NAME	I/O	FUNCTION
1	Vss		(Ground)	121	VSS		(Ground)
2	CA0	I		122	HMD0	I/O	
3	CA1	I		123	HMD1	I/O	
4	CA2	I		124	HMD2	I/O	
5	CA3	I		125	HMD3	I/O	
6	CA4	I		126	HMD4	I/O	
7	CA5	I	Address bus of internal register	127	HMD5	I/O	
8	CA6	I		128	HMD6	I/O	Wave memory data bus (Upper 16 bits)
9	CA7	I		129	HMD7	I/O	
10	CA8	I		130	HMD8	I/O	
11	CA9	I		131	HMD9	I/O	
12	CA10	I		132	HMD10	I/O	
13	CA11	I		133	HMD11	I/O	
14	VSS		(Ground)	134	HMD12	I/O	
15	CD0	I/O		135	HMD13	I/O	
16	CD1	I/O		136	HMD14	I/O	
17	CD2	I/O		137	HMD15	I/O	
18	CD3	I/O		138	VSS		(Ground)
19	CD4	I/O		139	HMA0	O	
20	CD5	I/O		140	HMA1	O	
21	CD6	I/O		141	HMA2	O	
22	CD7	I/O		142	HMA3	O	
23	CD8	I/O	Data bus of internal register	143	HMA4	O	
24	CD9	I/O		144	HMA5	O	
25	CD10	I/O		145	HMA6	O	
26	CD11	I/O		146	HMA7	O	
27	CD12	I/O		147	HMA8	O	
28	CD13	I/O		148	HMA9	O	
29	CD14	I/O		149	HMA10	O	
30	VDD		(Power supply)	150	VDD		(Power supply)
31	VSS		(Ground)	151	VSS		(Ground)
32	CD15	I/O		152	HMA11	O	
33	CSN	I	Chip select	153	HMA12	O	Wave memory address bus
34	WRN	I	Write strobe	154	HMA13	O	
35	RDN	I	Read strobe	155	HMA14	O	
36	VDD		(Power supply)	156	HMA15	O	
37	SYSH0	O		157	HMA16	O	
38	SYSH1	O		158	HMA17	O	
39	SYSH2	O		159	HMA18	O	
40	SYSH3	O	NSYS/LNSYS upper 16 bits output	160	HMA19	O	
41	SYSH4	O		161	HMA20	O	
42	SYSH5	O		162	HMA21	O	
43	SYSH6	O		163	HMA22	O	
44	SYSH7	O		164	HMA23	O	
45	KONO0	O		165	HMA24	O	
46	KONO1	O	Key on data	166	VSS		(Ground)
47	KONO2	O		167	MRASN	O	RAS when DRAM(s) is connected to wave memory
48	KONO3	O		168	MCASN	O	CAS when DRAM(s) is connected to wave memory
49	VSS		(Ground)	169	MOEN	O	Wave memory output enable
50	SYSL0	I/O		170	MWEN	O	Wave memory write enable
51	SYSL1	I/O		171	VSS		(Ground)
52	SYSL2	I/O		172	LMD0	I/O	
53	SYSL3	I/O	NSYS input/LNSYS output lower 8 bits	173	LMD1	I/O	
54	SYSL4	I/O		174	LMD2	I/O	
55	SYSL5	I/O		175	LMD3	I/O	
56	SYSL6	I/O		176	LMD4	I/O	
57	SYSL7	I/O		177	LMD5	I/O	
58	KONI0	I		178	LMD6	I/O	
59	KONI1	I	Key on data input	179	LMD7	I/O	Wave memory data bus (Lower 16 bits)
60	VDD	I	(Power supply)	180	VDD		(Power supply)
61	VSS		(Ground)	181	VSS		(Ground)
62	KONI2	I		182	LMD8	I/O	
63	KONI3	I		183	LMD9	I/O	
64	DAC0	O	DAC output	184	LMD10	I/O	
65	DAC1	O		185	LMD11	I/O	
66	WCLK	O	DAC0/DAC1 word clock	186	LMD12	I/O	
67	MELO0	O		187	LMD13	I/O	
68	MELO1	O		188	LMD14	I/O	
69	MELO2	O		189	LMD15	I/O	
70	MELO3	O	MEL wave data output	190	VSS		(Ground)
71	MELO4	O		191	LMA0	O	
72	MELO5	O		192	LMA1	O	
73	MELO6	O		193	LMA2	O	
74	MELO7	O		194	LMA3	O	
75	VDD		(Power supply)	195	LMA4	O	
76	ADLR	O	ADC word clock	196	LMA5	O	
77	MELI0	I		197	LMA6	O	
78	MELI1	I		198	LMA7	O	
79	MELI2	I		199	LMA8	O	
80	MELI3	I	MEL wave data input	200	LMA9	O	
81	MELI4	I		201	LMA10	O	
82	MELI5	I		202	LMA11	O	
83	MELI6	I		203	VSS		(Ground)
84	MELI7	I		204	LMA12	O	
85	VSS		(Ground)	205	LMA13	O	Wave memory address bus (Lower data memory)
86	RCASN	O	DRAM column address strobe (RAS signal)	206	LMA14	O	
87	RA8	O		207	LMA15	O	
88	RA7	O		208	LMA16	O	
89	RA6	O		209	LMA17	O	
90	VDD		(Power supply)	210	VDD		(Power supply)
91	VSS		(Ground)	211	VSS		(Ground)
92	RA5	O	DRAM address bus	212	LMA18	O	
93	RA4	O		213	LMA19	O	
94	RA3	O		214	LMA20	O	
95	RA2	O		215	LMA21	O	
96	RA1	O		216	LMA22	O	
97	RA0	O		217	LMA23	O	
98	RRASN	O	DRAM row address strobe (RAS signal)	218	LMA24	O	
99	RWEN	O	DARM write enable	219	VSS		(Ground)
100	VSS		(Ground)	220	SYO	O	Sync. signal for master clock
101	RD7	I/O		221	SYOD	O	Sync. signal for HCLK/QCLK
102	RD6	I/O		222	QCLK	O	1/12 master clock (64Fs)
103	RD5	I/O		223	HCLK	O	1/6 master clock (128Fs)
104	RD4	I/O		224	CK256	O	1/3 master clock (256Fs)
105	RD3	I/O		225	SYSCLK	O	1/2 master clock (384Fs)
106	RD2	I/O		226	VDD		(Power supply)
107	RD1	I/O		227	SYI	I	Sync. clock
108	RD0	I/O		228	MCLKI	I	Master clock input
109	VSS		(Ground)	229	MCLKO	O	Master clock output
110	RD17	I/O		230	VDD		(Power supply)
111	RD16	I/O	DRAM data bus	231	XIN	I	Crystal osc. input
112	RD15	I/O		232	XOUT	O	Crystal osc. output
113	RD14	I/O		233	VSS		(Ground)
114	RD13	I/O		234	ICN	I	Initial clear
115	RD12	I/O		235	CHIP2	I	2 chips mode enable
116	RD11	I/O		236	SLAVE	I	Master/Slave select when 2 chips mode
117	RD10	I/O		237	TESTON	I	
118	RD9	I/O		238	ACIN	I	Test pin
119	RD8	I/O		239	DCTEST	I	
120	VDD		(Power supply)	240	VDD		(Power supply)

• YSS236-F (XT013A00) VOP3

TG: IC2,12

PIN No.	NAME	I/O	FUNCTION	PIN No.	NAME	I/O	FUNCTION
1	VSS		Power supply	81	SO7	O	
2	WA17	O		82	SO6	O	Serial output
3	WA16	O		83	SO5	O	
4	WA15	O		84	VDD		Ground
5	WA14	O	External memory address bus	85	VSS		Power supply
6	WA13	O		86	SO4	O	
7	WA12	O		87	SO3	O	
8	WA11	O		88	SO2	O	Serial output
9	WA10	O		89	SO1	O	
10	VDD		Ground	90	SO0	O	
11	VSS		Power supply	91	WDCK	O	Data enable for DAC
12	WA09	O		92	SWPKON	O	SWP00 format key on output
13	WA08	O		93	IRQN	O	EG interrupt
14	WA07	O		94	VDD		Ground
15	WA06	O	External memory address bus	95	VSS		Power supply
16	WA05	O		96	XTAL_I	I	Cristal oscillator terminal
17	WA04	O		97	XTAL_O	O	Cristal oscillator terminal
18	WA03	O		98	MCLK	O	Oscillate clock output
19	WA02	O		99	VDD		Ground
20	VDD		Ground	100	VSS		Power supply
21	VSS		Power supply	101	MICN	I	Initial clear
22	WA01	O		102	CLKIN	I	Master clock input
23	WA00	O		103	SYWIN	I	Sync.signal input
24	WEN	O	External memory control (WEN)	104	SYW	O	Sync.signal output
25	OEN	O	External memory control (OEN)	105	SYWD	O	Sync.signal output
26	RASN	O	External memory control (RASN)	106	VDD		Ground
27	CASN	O	External memory control (CASN)	107	VSS		Power supply
28	CEN	O	External memory control (CEN)	108	CLKO	O	For test (512 fs output)
29	VDD		Ground	109	WCLK	O	2 times sync.clock outout (256fs)
30	VSS		Power supply	110	HCLK	O	4 times sync.clock outout (128fs)
31	WD19	I/O		111	QCLK	O	8 times sync.clock outout (64fs)
32	WD18	I/O		112	TSTCI	I	PLL test input
33	WD17	I/O	External memory data bus	113	VDD		Ground
34	WD16	I/O		114	VSS		Power supply
35	WD15	I/O		115	(NC)		
36	WD14	I/O		116	VDD(PLL)		
37	VDD		Ground	117	CPO	O	PLL control output
38	VSS		Power supply	118	CPIN	I	PLL control input
39	WD13	I/O		119	REF	I	PLL control input
40	WD12	I/O		120	VSS(PLL)		
41	WD11	I/O		121	(NC)		
42	WD10	I/O	External memory data bus	122	VDD		Ground
43	WD09	I/O		123	VSS		Power supply
44	WD08	I/O		124	TSTCS	I	PLL test input
45	WD07	I/O		125	CA6	I	
46	VDD		Ground	126	CA5	I	
47	VSS		Power supply	127	CA4	I	CPU address bus
48	WD06	I/O		128	CA3	I	
49	WD05	I/O		129	CA2	I	
50	WD04	I/O		130	VDD		Ground
51	WD03	I/O	External memory data bus	131	VSS		Power supply
52	WD02	I/O		132	CA1	I	CPU address bus
53	WD01	I/O		133	CA0	I	Lo/Hi select in 8 bits write
54	WD00	I/O		134	CSN	I	Chip select
55	VDD		Ground	135	RDN	I	Register read
56	VSS		Power supply	136	WRN	I	Register write
57	TST2	O		137	BTYP		Data bus type select
58	TST1	O	Test output	138	VDD		Ground
59	TST0	O		139	VSS		Power supply
60	MS	I	Memory select	140	CD15	I/O	
61	LRCLK	O	LR clock for ADC	141	CD14	I/O	
62	SI7	I		142	CD13	I/O	CPU data bus
63	SI6	I		143	CD12	I/O	
64	VDD		Ground	144	CD11	I/O	
65	VSS		Power supply	145	VDD		Ground
66	SI5	I		146	VSS		Power supply
67	SI4	I		147	CD10	I/O	
68	SI3	I	Serial input	148	CD09	I/O	
69	SI2	I		149	CD08	I/O	CPU data bus
70	SI1	I		150	CD07	I/O	
71	SI0	I		151	CD06	I/O	
72	DB1	I		152	CD05	I/O	
73	DB0	I		153	VDD		Ground
74	VDD		Ground	154	VSS		Power supply
75	VSS		Power supply	155	CD04	I/O	
76	ODFM	I	Output mode select for DAC	156	CD03	I/O	
77	OFS3	I		157	CD02	I/O	CPU data bus
78	OFS2	I	Serial output format select	158	CD01	I/O	
79	OFS1	I		159	CD00	I/O	
80	OFS0	I		160	VDD		Ground

• **SED1335F0B** (XQ595A00) **LCDC** (LCD Controller)

DP: IC4

PIN No.	NAME	I/O	FUNCTION	PIN No.	NAME	I/O	FUNCTION
1	VA5	O	VRAM address bus	31	XD2	O	Data bus output for 4 bit dot
2	VA4	O		32	XD1	O	
3	VA3	O		33	XD0	O	
4	VA2	O		34	XECL	O	S driver enable, chain clock
5	VA1	O		35	XSCL	O	Data bus shift clock
6	VA0	O		36	Vss	-	Ground
7	/VWR	O	VRAM read/write	37	LP	O	X driver latch pulse
8	/VCE	O	Memory control	38	WF	O	Frame signal for X/Y driver
9	/VRD	-	Not used	39	YDIS	O	Power down signal for displaying off mode
10	/RES	I	Initial clear	40	YD	O	Scan start signal
11	NC	-	Not used	41	YSCL	O	Scan shift clock
12	NC	-	Not used	42	VD7	I/O	VRAM data bus
13	/RD	I	Read strobe	43	VD6	I/O	
14	/WR	I	Write strobe	44	VD5	I/O	
15	SEL2	I	Bus select	45	VD4	I/O	
16	SEL1	I	Bus select	46	VD3	I/O	
17	OSC1	I	Clock	47	VD2	I/O	
18	OSC2	O	Clock	48	VD1	I/O	
19	/CS	I	Chip select	49	VD0	I/O	
20	A0	I	Data mode select	50	VA15	O	VRAM address bus
21	Vdd	-	Power supply	51	VA14	O	
22	D0	I/O	Data bus	52	VA13	O	
23	D1	I/O		53	VA12	O	
24	D2	I/O		54	VA11	O	
25	D3	I/O		55	VA10	O	
26	D4	I/O		56	VA9	O	
27	D5	I/O		57	VA8	O	
28	D6	I/O		58	VA7	O	
29	D7	I/O		59	VA6	O	
30	XD3	O	Data bus output for 4 bit dot	60	NC	-	Not used

• **MBCG46183-129** (XV833A00) **GATE ARRAY**

DM: IC26

PIN No.	NAME	I/O	FUNCTION	PIN No.	NAME	I/O	FUNCTION
1	D5	I/O	Data bus	25	TX31	O	Serial data
2	D6	I/O		26	RX32	I	
3	D7	I/O		27	TX32	O	
4	/IRQ0	I/O	Interrupt request	28	RX33	I	
5	/IRQ1	I/O	Interrupt request	29	TX33	I/O	
6	VSS6		Ground	30	/IC	I	Initial Clear
7	/IRQ2	I/O	Interrupt request	31	VSS31		Ground
8	/IRQ3	I/O	Interrupt request	32	XI	I	Crystal quarts input
9	/RD	I	Read	33	VSS33		Ground
10	/WR	I	Write	34	XO	O	Crystal quarts output
11	/CE	I	Chip enable	35	A0	I	Address bus
12	/ASTB	I		36	A1	I	
13	TESTI0	I	Test mode	37	A2	I	
14	RX0	I	Serial data	38	A3	I	
15	TX0	O		39	A4	I	
16	RX1	I		40	A5	I	
17	TX1	O		41	CPUCLK	I	Clock
18	VSS18		Ground	42	VSS42		Ground
19	VDD19		Power supply	43	VDD43		Power supply
20	RX2	I	Serial data	44	D0	I/O	Data bus
21	TX2	O		45	D1	I/O	
22	RX30	I		46	D2	I/O	
23	TX30	O		47	D3	I/O	
24	RX31	I		48	D4	I/O	

• **MN101C027YB** (XS711200) **CPU** EN: IC1

PIN No.	NAME	I/O	FUNCTION	PIN No.	NAME	I/O	FUNCTION
1	S1	I	Switch matrix data	33	S12	I	Switch matrix data
2	S2	I		34	S13	I	
3	S3	I		35	S14	I	
4	S4	I		36	TXD	O	MIDI transmit data
5	S5	I		37	S15	I	Switch matrix data
6	VREF+	-	Power supply (+5V, analog)	38	S16	I	
7	VDD	-	Power supply (+5V)	39	S17	I	
8	OSC2	O	Crystal oscillator (8MHz)	40	S18	I	
9	OSC1	I	Crystal oscillator (8MHz)	41	L16	O	LED drive data
10	VSS	-	Ground	42	L17	O	
11	XI	I	Not used	43	L18	O	
12	XO	O	Not used	44	L19	O	
13	MMOD	I	Memory mode select (Grounded)	45	L8	O	
14	RD0	O	Rotary encoder data	46	L9	O	
15	RXD	I	MIDI receive data	47	L10	O	
16	D0	O	LED and switch drive data	48	L11	O	
17	D1	O		49	L12	O	
18	D2	O		50	L13	O	
19	D3	O		51	L14	O	
20	D4	O		52	L15	O	
21	/RST	I	Reset	53	L7	O	LED and switch drive data
22	D5	O	LED and switch drive data	54	L6	O	
23	D6	O		55	L5	O	
24	D7	O		56	L4	O	
25	D8	O		57	L3	O	
26	D9	O		58	L2	O	
27	S6	I	Switch matrix data	59	L1	O	
28	S7	I		60	L0	O	
29	S8	I		61	VREF	-	Grounded
30	S9	I		62	AD0	I	Analog input
31	S10	I		63	AD1	I	Analog input
32	S11	I		64	S0	I	Switch matrix data

• **MSM82C51A-2GS-K** (XV513A00) **USART** (Serial Control) DP: IC7

PIN No.	NAME	I/O	FUNCTION	PIN No.	NAME	I/O	FUNCTION
1	D2	I	Data bus	15	TXRDY	O	Transmit ready
2	D3	I	Data bus	16	SYNDET/BD	I/O	Receiver/Break
3	RXD	I	Receive data	17	/CTS	I	MODEM control
4	GND	-	Ground	18	TXEMPTY	O	Transmitter empty
5	D4	I	Data bus	19	TXD	O	Transmission data
6	D5	I	Data bus	20	CLK	I	Main clock
7	D6	I	Data bus	21	RESET	I	System reset
8	D7	I	Data bus	22	/DSR	I	MODEM control
9	/TXC	I	Transmitter clock	23	/RTS	O	MODEM control
10	/WR	I	Write control	24	/DTR	O	MODEM control
11	/CS	I	Device select	25	/RXC	I	MODEM control
12	C//D	I	Low: Access data High: command word, status word	26	VCC	-	Power supply (+5V)
13	RD	I	Read control	27	D0	I	Data bus
14	RXRDY	O	Receive ready	28	D1	I	Data bus

• **HD63266F** (XI939A00) **FDC** (Floppy Disk Controller) DP: IC17

PIN No.	NAME	I/O	FUNCTION	PIN No.	NAME	I/O	FUNCTION
1	8"//5"	I	Data transmission speed	33	/TRKO	I	Track 00 signal
2	XTALSET	I	Clock select	34	/INDEX	I	Index signal
3	/RESET	I	Rest	35	/RDATA	I	Read data input from FDD
4	E//RD	I	Enable/Read	36	XTAL2		Clock
5	RW//WR	I	Read/write/Write	37	EXTAL2		
6	/CS	I	Chip select	38	NC		
7	/DACK	I	DMA acknowledge	39	XTAL1		Clock
8	RS0	I	Register select	40	EXTAL1		
9	RS1	I		41	VSS4		Ground
10	VSS1		Ground	42	VSS5		
11	VSS2			43	NC		
12	D0	I/O	Data bus	44	VCC2		Power supply
13	D1	I/O		45	VCC3		
14	D2	I/O		46	VCC4		
15	D3	I/O		47	/WGATE	O	Write control
16	D4	I/O		48	/WDATA	O	Writ data to FDD
17	D5	I/O		49	VSS6		Ground
18	D6	I/O		50	/STEP	O	Step signal to control head of FDD
19	D7	I/O		51	/HDIR	O	Direction
20	/DREQ	O	DMA request	52	/HLOAD	O	Head load
21	/IRQ	O	Interrupt request	53	/HSEL	O	Head select
22	/DEND	I	Data end	54	VSS7		Ground
23	VSS3		Ground	55	/DS0	O	Drive select
24	1/2 EX1			56	/DS1	O	
25	VCC1		Power supply	57	/DS2	O	
26	NUM1	I		58	/DS3	O	
27	NUM3	I		59	VSS8		Ground
28	IFS	I	Host interface select	60	/MON0	O	Motor on
29	SFORM	I	Format data	61	/MON1	O	
30	/INP	I	Index pulse	62	/MON2	O	
31	/READY	I	Ready from FDD	63	/MON3	O	
32	/WPRT	I	Write control signal	64	VSS9		Ground

• **PCM1716E/T2** (XU829A00) **DAC** (Digital to Analog Converter) TG: IC4,5

PIN No.	NAME	I/O	FUNCTION	PIN No.	NAME	I/O	FUNCTION
1	LRCK	I	Clock input	15	Vcc1	-	Analog power supply (+5V)
2	DATA	I	Data input	16	VOUTL	O	Lch, analog voltage output
3	BCK	I	Bit clock	17	NC	-	
4	CLKO	O	System clock	18	EXTL	O	Lch, analog output
5	XTI	I	Clock input	19	AGND2L	-	Analog ground
6	XTO	O	Clock out	20	Vcc2L	-	Analog power supply (+5V)
7	DGND	-	Digital ground	21	/ZERO	O	Zero data flag
8	VDD	-	Digital power supply (+5V)	22	/RST	I	Reset
9	Vcc2R	-	Analog power supply (+5V)	23	/CS/IWO	I	Chip select
10	AGND2R	-	Analog ground	24	MODE	I	Mode control select (H: Software, L: Hardware)
11	EXTR	O	Rch, analog output	25	/MUTE	I	Mute control
12	NC	-		26	MD/DM0	I	Mode control data/ De-emphasis select1
13	VOUTR	O	Rch, analog voltage output	27	MC/DM1	I	Mode control BCK/De-emphasis select2
14	AGND1	-	Analog ground	28	ML/IIS	I	Mode control Latch/input format select

• **1414-AAPI** (XV481B00) **GATE ARRAY** (Video Out) DP: IC8

PIN No.	NAME	I/O	FUNCTION	PIN No.	NAME	I/O	FUNCTION
1	RESET	I	Reset (High/Low)	33	RD	O	Read strobe (High/Low)
2	TEST	I	Test mode setting (High/Low)	34	WR	O	Write strobe (High/Low)
3	MODE	I	Mode select (High/Low)	35	GND	-	Ground (Out buffer)
4	NTSC/PAL	I	NTSC/PAL signal input (High/Low)	36	A0	O	
5	YD	I	Frame	37	A1	O	
6	LP	I	Line latch pulse	38	A2	O	
7	5V	-	Power supply (5 V)	39	A3	O	
8	XSCL	I	4 Dot latch clock	40	A4	O	
9	GND	-	Ground (In buffer)	41	A5	O	
10	XD0	I		42	A6	O	Address bus
11	XD1	I	Dot data	43	A7	O	
12	XD2	I		44	A8	O	
13	XD3	I		45	A9	O	
14	GND	-	Ground	46	A10	O	
15	5V	-	Power supply (In bffer 5 V)	47	A11	O	
16	5V	-	Power supply (Out buffer 5 V)	48	A12	O	
17	LCD_CLK	O	LCD clock output (9 MHz)	49	5V	-	Ground (Out buffer 5 V)
18	GND	-	Ground (Out buffer)	50	A13	O	
19	XA0	I	OSC_NTSC signal input	51	A14	O	Address bus
20	XA1	O	OSC_NTSC signal output	52	A15	O	
21	XB0	I	OSC_PAL signal input	53	A16	O	
22	XB1	O	OSC_PAL signal output	54	SYNCOUT	O	Sync. signal output
23	GND	-	Ground (In buffer)	55	GND	-	Ground (Out buffer)
24	D0	I/O		56	SC_NTSC	O	SC_NTSC signal output
25	D1	I/O		57	SC_PAL	O	SC_PAL signal output
26	D2	I/O		58	GND	-	Ground (Out buffer)
27	D3	I/O	Data bus	59	BOUT1	O	
28	D4	I/O		60	BOUT0	O	
29	D5	I/O		61	GOUT1	O	Color data
30	D6	I/O		62	GOUT0	O	
31	D7	I/O		63	ROUT1	O	
32	GND	-	Ground	64	ROUT0	O	

• **AK5351-VF-E2** (XV510A00) **ADC** (Analog to Digital Converter) TG: IC15

PIN No.	NAME	I/O	FUNCTION	PIN No.	NAME	I/O	FUNCTION
1	AINR+	I	Analog signal input (R channel +)	13	DGND	-	Digital ground
2	AINR-	I	Analog signal input (R channel -)	14	TST4	I/O	Test mode setting 4
3	VREF	O	Reference voltage	15	AMODE2		Interface clock select 2
4	VA	-	Analog power supply	16	/PD	I	Power-down mode
5	AGND	-	Analog ground	17	MCLK	I	Master clock input
6	AINL+	I	Analog signal input (L channel +)	18	SCLK	I/O	Serial data clock
7	AINL-	I	Analog signal input (L channel -)	19	LRCK	I	Input/Output channel clock
8	TST1	I/O	Test mode setting 1	20	FSYNC	I/O	Frame synch. clock
9	HPFE		HPF on/off	21	SDATA	O	Serial data output
10	TST2	I/O	Test mode setting 2	22	CMODE	I	Master clock select
11	TST3	I/O	Test mode setting 3	23	SMODE1	I	Interface clock select 1
12	VD	-	Digital power supply	24	VB	-	Digital power supply

• SPC7212F0A(XV636B00) SCSI2 Interface Controller

DM: IC31

PIN No.	NAME	I/O	FUNCTION	PIN No.	NAME	I/O	FUNCTION
1	LVDD	-	Power supply +3.3V	51	LVDD	-	Power supply +3.3V
2	EXCLK	I	External clock input	52	PD13	I/O	DMA data bus
3	VSS	-	Ground	53	PD2	I/O	
4	OSCIN	I	Oscillator input	54	PD12	I/O	
5	OSCOUT	O	Oscillator output	55	PD3	I/O	
6	LVDD	-	Power supply +3.3V	56	VSS	-	Ground
7	CLKSEL0	I	Input clock select	57	PD11	I/O	DMA data bus
8	CLKSEL1	I	System clock select	58	PD4	I/O	
9	VC	O	Internal VCO control	59	PD10	/IO	
10	XPLLPD	I	Pll power down input	60	PD5	I/O	
11	LVDD	-	Power supply +3.3V	61	HVDD	-	Power supply +5V
12	PLLCT0	I	Pll control	62	PD9	I/O	DMA data bus
13	PLLCT1	I	Pll control	63	PD6	I/O	
14	VSS	-	Ground	64	PD8	I/O	
15	TESTEN	I	Test	65	PD7	I/O	
16	DB0	I/O	Data bus	66	VSS	-	Ground
17	DB1	I/O		67	XSIO	I/O	SCSI I/O signal
18	DB2	I/O		68	XSREQ	I/O	SCSI REQ signal
19	DB3	I/O		69	VSS	-	Ground
20	HVDD		Power supply +5V	70	XSCD	I/O	SCSI C/D signal
21	DB4	I/O	Data bus	71	XSSEL	I/O	SCSI SEL signal
22	DB5	I/O		72	VSS	-	Ground
23	DB6	I/O		73	XSMSG	I/O	SCSI MSG signal
24	DB7	I/O		74	XSRST	I/O	SCSI RST signal
25	VSS	-	Ground	75	VSS	-	Ground
26	LVDD	-	Power supply +3.3V	76	LVDD	-	Power supply +3.3V
27	HVDD	-	Power supply +5V	77	XSACK	I/O	SCSI ACK signal
28	AD0	I	Address bus	78	XSBSY	I/O	SCSI BSY signal
29	AD1	I		79	VSS	-	Ground
30	AD2	I		80	NC	-	N.C.
31	AD3	I		81	XSANT	I/O	SCSI ANT signal
32	AD4	I		82	XSDBP	I/O	SCSI data parity
33	VSS	-	Ground	83	VSS	-	Ground
34	XWR	I	Data write	84	TESTMON	O	Test monitor output
35	XRD	I	Data read	85	XSDB7	I/O	SCSI data bus
36	XRESET	I	System reset input	86	XSDB6	I/O	
37	XINT	O	Interrupt request	87	NC	-	N.C.
38	XCS	I	Chip select	88	VSS	-	Ground
39	HVDD	-	Power supply +5V	89	XSDB5	I/O	SCSI data bus
40	XPDACK	I/O	Port DMA acknowledge	90	XSDB4	I/O	
41	XPRD	I/O	Port read	91	VSS	-	Ground
42	XPWR	I/O	Port write	92	NC	-	N.C.
43	PDREQ	I/O	Port DMA request	93	XSDB3	I/O	SCSI data bus
44	VSS	-	Ground	94	XSDB2	I/O	
45	PD15	I/O	Port DMA data bus	95	VSS	-	Ground
46	PD0	I/O		96	NC	-	N.C.
47	PD14	I/O		97	XSDB1	I/O	SCSI data bus
48	PD1	I/O		98	XSDB0	I/O	
49	HVDD	-	Power supply +5V	99	NC	-	N.C.
50	VSS	-	Ground	100	VSS	-	Ground

IC BLOCK DIAGRAM

● **RC4558D-V** (IG001390)
Dual Operational Amplifier
MK: IC1

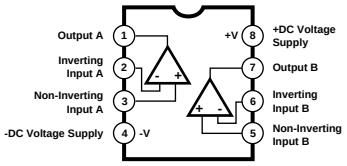

● **SN74HCU04N** (IG142250)
● **SN74VHCU04F** (XM332A00)
● **TC74HCU04AF-TP1** (XD660A00)
INVERTER
AJACK/DJACK: IC4
TG: IC3
DP: IC2,9
DM: IC4

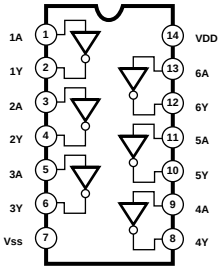

● **µPC4570HA** (XB247A00)
Operational Amplifier
AM: IC1,2,3,5,6,7

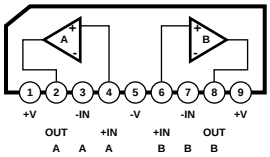

● **LA6517** (XM804A00)
Operational Amplifier
AM: IC4

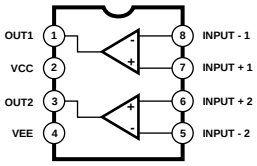

● **µPC4570C** (XC520A00)
● **µPC4570G2** (XF291A00)
Operational Amplifier
TG: IC14
MV: IC101,102

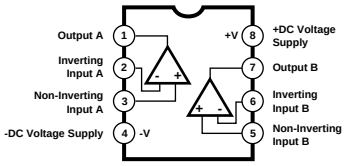

● **LB1443N** (XF483A00)
LEVEL METER DRIVER
TG: IC13

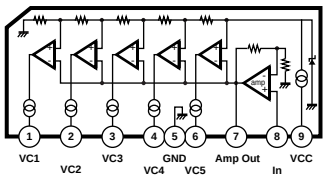

● **M5227P** (XF751A00)
EQUALIZER
AMP: IC2,3

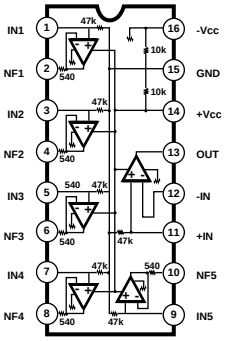

● **HD74LVC139FPEL** (XS048A00)
DEMULTIPLEXER
DM: IC25

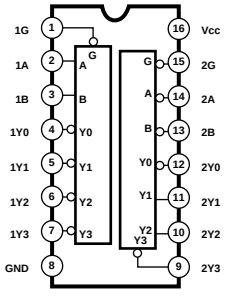

● **TC74VHC08F** (XT014A00)
AND
DM: IC5
TG: IC24,27

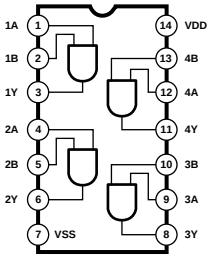

● **TC74VHC157F(EL)** (XT475A00)
DATA SELECTOR
DM: IC20,21

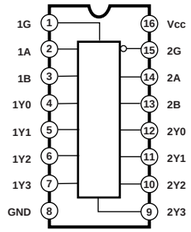

● **SN75C1168N** (XU463A00)
LINE TRANSCEVER
AJACK/DJACK: IC3

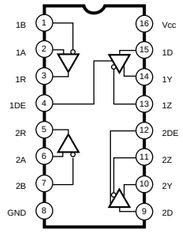

● **TC74VHC245F** (XT487A00)
● **TC74HC245AF** (XS720A00)
TRANSCEIVER
DM: IC9-12,14-17,22,30 / DP: IC13,14,15
TG: IC19-23,29-32,34-37

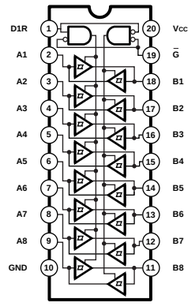

● **TC74VHC11F (EL)** (XT812A00)
Triple 3 input AND
DP: IC16

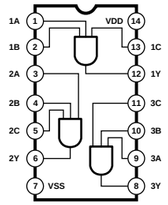

● **TC74VHC74F** (XN964A00)
D-FF
DM: IC18

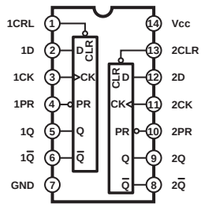

INPUTS				OUTPUTS	
PR	CLR	CLK	D	Q	Q
L	H	X	X	H	L
H	L	X	X	L	H
L	L	X	X	H	H
H	H	↑	H	H	L
H	H	↑	L	L	H
H	H	L	X	Q_0	$\overline{Q}_0$

● **TC74VHC32F-TEL** (XR337A00)
OR
TG: IC18,28,40 / DM: IC19,34 / DP: IC6

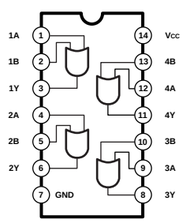

● **TC74VHC138F** (XT015A00)
DECODER
DM: IC23,24

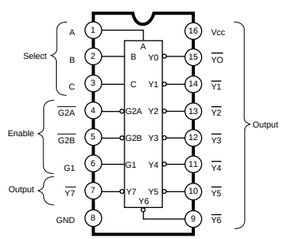

● **CXA1645M-T6** (XN431A00)
RGB ENCORDER
DP: IC11

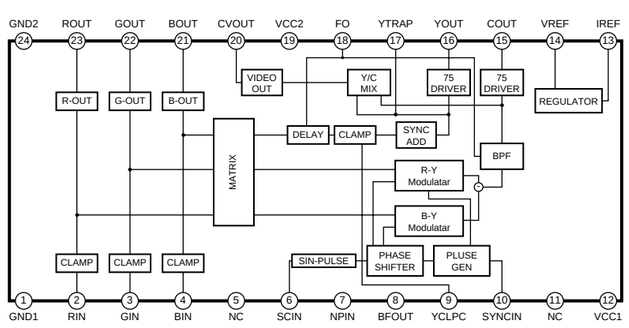

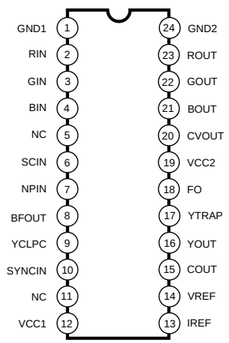

TEST PROGRAM

1. Test Condition

To check the unit using the test program, the following measuring instruments and jig are required:
Measuring instrument: Level meter (JIS-C)
Frequency counter
* Input impedance of 1 M ohm or more
Use the stereo plugs and connect a 33 ohm load at the [PHONES] terminal.

Unit settings:
MASTER VOLUME: Maximum
TRIM VR: Maximum
MIC INPUT VOLUME: Maximum
*LOOP SEND, SUB1, and SUB2 should be disconnected.

2. How to enter the Test Program

[AUTO MODE]
While pressing the [DEMO], [EXIT], and [INTRO A] buttons, turn on the power switch.

[MANUAL MODE]
While pressing the [DEMO], [EXIT], and [INTRO B] buttons, turn on the power switch.

3. Proceeding through the Test Program

To select the program number, use the [NEXT] and [BACK] buttons.
To start the test, press the [START/STOP] button.
When the test result is OK, the LCD will display "*" before the test name.
When the test result is no good, press the [DEMO] button or [C1] key. The test program will then wait for the next selection.

4. Test Program List

No.	LCD display	Test Functions and Judgment Criteria
1.	001: Version	Displays version for ROM (Main Program, Sub Program, Wave, Style, Parameter) Displays the flash memory protect state
2.	002:Rom Chk1	Checks ROMs (MAIN Program ROM, SUB Program ROM, Voice Parameter ROM, Style ROM) For NG, ROM name is displayed.
3.	003:Ram Chk1	Checks RAMs For NG, RAM name is displayed.
4.	004:Flash Chk1	Checks flash memorys For NG, flash memory name is displayed.
5.	005:WaveRomChk1	Checks wave ROM
6.	006:WaveRamChk1	Checks wave RAM
7.	007:SIMM Chk1	Checks SIMM
9.	009:FDD Chk	Insert the floppy disks one by one (2HD and 2DD) Checks the floppy disk drive unit
10.	010:HDD Chk(IDE)	Checks the hard disk If the hard disk is not inserted, the display will read "NO HDD".
11.	011:SCSI Chk	Connect the Zip drive at SCSI ID = 5. Checks SCSI drive
12.	012:Eff1Ram Chk	Checks the SWP30 #1 RAM Check the C3 note is produced and that there is no distortion.
13.	013:EFF2Ram Chk	Checks the VOP 3 RAM Check the C3 note is produced and that there is no distortion.
14.	014:Eff3Ram Chk	Checks the SWP 30 #2 RAM Check the C3 note is produced and that there is no distortion.

15.	015:TG1 Chk	Produces the sine wave sequence by changing the sound channels (1ch-64ch) in order from A0 toC6. Confirm that there is no noise. After autoscaling is finished, individual keys can be played. (If playing two or more keys simultaneously, the key pressed first has priority to make a sound.) When the voice switch is pressed, the tone of the voice will sound.
16.	016:TG2 Chk	Produces the sine wave sequence by changing the sound channels (1ch-64ch) in order from A0 toC6. Confirm that there is no noise. After autoscaling is finished, individual keys can be played. (If playing two or more keys simultaneously, the key pressed first has priority to make a sound.) When the voice switch is pressed, the tone of the voice will sound.
17.	017:TG3 Chk (Connection)	Produces the 1 kHz sine wave by changing the tone generators LSI. Confirm that sound is produce at every connection.
18.	018:Pitch Chk	Connect the frequency counter to the PHONES jacks. Check the frequency and output level. Frequency: 440 Hz +/- 0.2 Hz Output level: +5.4 dBm +/-3 dB
19.	019:Output R	Check the output level. (1 kHz) PHONES(L): less than -50 dBm PHONES(R): +7.8 dBm +/-3 dB AUX OUT(L/L+R): less than -40 dBm AUX OUT(R): +19.2 dBm +/-3 dB LOOP SEND(L/L+R): less than -70 dBm LOOP SENDER (R): +11.3 dBm +/-3 dB SUB1: less than -50 dBm SUB2: less than -50 dBm
20.	020:Output L	Check the output level. (1 kHz) PHONES(L): +7.8 dBm +/-3 dB PHONES(R): less than -50 dBm AUX OUT(L/L+R): +19.2 dBm +/-3 dB AUX OUT(R): less than -40 dBm LOOP SEND(L/L+R): +11.3 dBm +/-3 dB LOOP SENDER (R) : less than -70 dBm SUB1: less than -50 dBm SUB2: less than -50 dBm
21.	021:Oputput Sub1	Check the Sub1 output level. (1 kHz) PHONES(L): less than -65 dBm PHONES(R): less than -65 dBm AUX OUT(L/L+R): less than -70 dBm AUX OUT(R): less than -70 dBm LOOP SEND(L/L+R): less than -70 dBm LOOP SENDER (R) : less than -70 dBm SUB1: -11.3 dm +/-3 dB SUB2: less than -60 dBm
22.	022:Output Sub2	Check the Sub2 output level. (1 kHz) PHONES(L): less than -65 dBm PHONES(R): less than -65 dBm AUX OUT(L/L+R): less than -70 dBm AUX OUT(R): less than -70 dBm LOOP SEND(L/L+R): less than -70 dBm LOOP SENDER (R) : less than -70 dBm SUB1: less than -60dBm SUB2: -11.3 dm +/-3 dB
29.	029:EQ Low	Check the output level of EQ-low frequency. (65.4 Hz (C1)) PHONES(both L, R): +3.3 dBm +/-3 dB AUX OUT(both L/L+R, R): +15.8 dBm +/-3 dB LOOP SEND(both L/L+R, R): +7.1 dBm +/-3 dB SUB(both 1, 2): +13.8 dBm +/-3 dB
30.	030:EQ Mis	Check the output level of EQ/Mid frequency. (523 Hz (C4)) PHONES(both L, R): +4.6 dBm +/-3 dB AUX OUT(both L/L+R, R): +16.6 dBm +/-3 dB LOOP SEND(both L/L+R, R): +8.0 dBm +/-3 dB SUB(both 1, 2): +14.8 dBm +/-3 dB
31.	031:EQ High	Check the output level of EQ-High frequency. (4186 Hz (C7)) PHONES(both L, R): +3.7 dBm +/-3 dB AUX OUT(both L/L+R,R): +15.6 dBm +/-3 dB LOOP SEND(both L/L+R, R): +7.2 dBm +/-3 dB SUB(both 1, 2): +13.9 dBm +/-3 dB
32.	032:SP MUTE	When the [NEXT/BACK] button is pressed, check that the 1 kHz sine wave tone from the speaker stops. Press it again and the sound will come back on. During this test, the external output terminal signal will remain on the entire time.

33.	033:MUTE	When the [NEXT/BACK] button is pressed, check that the 1 kHz sine wave tone will stop from excluding the speaker and LOOP SEND(L/L+R), and repress it again, the sound will appear. If the plug is inserted into LOOP SEND(L/L+R), the tone from speaker will stop.
34.	034:D/A Noise	Check DAC noise. Press any key on the keyboard. The PIANO will sound at minimum volume. At this time, confirm that there is no distortion.
35.	035:SW.LED Chk	Check the switches and the LEDs Press the switch that is displayed on the LCD. When the switch is pressed, a pre-assigned note is output. (With some switches, the corresponding LED will light up.) Also check the dial by turning it; the LCD should display "OK". The LCD will display the numbers from 50 -100 when turning the dial clockwise from the center, and the LCD will display the numbers from 0 -50 when turning the dial counter-clockwise from the center.
36.	036:All LED On	Check that all panel LEDs are lit.
37.	037:RedLED On	Check that all red panel LEDs are lit.
38.	038:GreenLED On	Check that all green panel LEDs are lit.
43.	043:All LCD On	Check that all LCD dots are on.
44.	044:All LCD Off	Check that all LCD dots are off.
46.	046:Pedal1 Chk	Connect the foot switch into the SWITCH 1 terminal. Check that the C3 note sound is produced when the pedal is depressed, and that the C4 note sound is produced when the pedal is released. The test results will appear on the LCD.
47.	047:Pedal2 Chk	Connect the foot switch into the SWITCH 2 terminal. Check that the C3 note sound is produced when the pedal is depressed, and that the C4 note sound is produced when the pedal is released. The test results will appear on the LCD.
48.	048:Indv.Out Chk	Check that the LCD displays "OK" when the plugs are inserted into the SUB1 and SUB2 terminals, and then pull them out.
49.	049:PBWheel Chk	Check that the C3 note sound is produced when the PITCH BEND wheel is at minimum and the C4 note sound is produced when it is at maximum.
50.	050:ModWheelChk	Check that the C3 note sound is produced when the MODULATION wheel is at minimum and the C4 note sound is produced when it is at maximum.
51.	051:ExpPedal Chk	Connect the foot pedal into the VOLUME terminal. Check that the C3 note sound is produced when the foot pedal is at minimum and the C4 note sound is produced when it is at maximum.
52.	052:AfterTouch Chk	Check that the C3 note sound is produced when any key on the keyboard is pressed, and check that the C4 note sound is produced when the key is released. The test results will appear on the LCD.
53.	053:Midi Chk	After connecting the MIDI IN jack and MIDI OUT jack (both 1 and 2) with a MIDI cable, execute the test. Set the HOST SELECT switch to MIDI. Check that the C3 and C4 note sounds are produced and the LCD displays "OK". (MIDI-A: C3, MIDI-B: C4) If there is no output after one second, it is judged NG.
54.	05:To Host Chk	Connect pin 3 to pin 5 and pin 6 to pin 8 of the TO HOST terminal, and execute the test. Check that the following note sounds when changing the HOST SELECT switch position according to the LCD; the LCD will display "OK". PC1: note C3; PC2: note C4; MAC: note C5
55.	055:MIC Chk	Enter the sound into the MIC terminal. Check that there is no abnormal noise. Check that the output sound is one octave above the harmonizer when the [BACK]/[NEXT] button is pressed.
57.	057:Rom Chk2	Checks ROMs
58.	058:Ram Chk2	Checks RAMs
59.	059:Flash Chk2	Checks flash memorys
60.	060:WaveROM	Chk2 Checks Wave ROM
61.	061:WaveRam	Chk2 Checks Wave RAM
62.	062:SIMM Ch2	Checks SIMM
65.	065:VideoOut NTSC RED	Using the NTSC signal to check that the red characters are displayed on the video terminal.
67.	067:VideoOut NTSC BLUE	Using the NTSC signal to check that the blue characters are displayed on the video terminal.
68.	068:VideoOut PAL RED	Using the PAL signal to check that the red characters are displayed on the video terminal.
69.	069:ideoOut PAL GREEN	Using the PAL signal to check that the green characters are displayed on the video terminal.
70.	070:VideoOut PAL BLUE	Using the PAL signal to check that the blue characters are displayed on the video terminal.

71.	071:PC Keyboard Chk	Connect the PC keyboard. Check that the LCD will displays "OK".
72.	072:Data Ver. Chk	After reading in the system backup disk, check the version for each data in flash memory.
73.	073:Factory Set	All RAMs are initialized and reset to factory setting data when this test is executed.
74.	074:Test Exit	The test program is exited when this test is executed.

Note: 0 dBm = 0.775V

5. Other

5-1 LCD Contrast
When the LCD CONTRAST knob is turned clockwise and counter-clockwise, confirm that the contrast is changes.

5-2 AUX IN
Apply a 1 kHz, -15 dBm, sine wave to the AUX IN L/L+R. Confirm that the output meets the following specifications:

PHONES (L, R): +0.4 dBm +/-3 dB

When TRIM volume is at minimum, confirm that the output meets the following specifications:

PHONES (L, R): less than -65 dB

5-3 MIC/LINE Input Level & Level Indicate LED

When the following input level are used with test program number 055, confirm that output levels are as follows:

V 1.00

MIC/LINE	Input level	Output level	SIGNAL LED	OVER LED
LINE	-56.0 dBm	-10.0 dBm +/-3 dB	OFF	OFF
MIC 2	-56.0 dBm	-0.4 dBm +/-3 dB	ON	OFF
MIC 1	-50.0 dBm	+12.8 dBm +/-3 dB	ON	ON

V 1.10

MIC/LINE	Input level	Output level	SIGNAL LED	OVER LED
LINE	-56.0 dBm	-14.7 dBm +/-3 dB	OFF	OFF
MIC 2	-56.0 dBm	-4.8 dBm +/-3 dB	ON	OFF
MIC 1	-50.0 dBm	+10.7 dBm +/-3 dB	ON	ON

5-4 Noise Level
When no sound is produced, confirm that each residual output noise is as follows:

PHONES (L, R): less than -75 dBm
AUX OUT (L/L+R, R): less than -65 dBm
LOOP SEND (L, R): less than -65 dBm
INDIV. OUT (1, 2): less than -60 dBm

POWER ON RESET

While pressing the [Demo] button, all RAMs will be initialized and be returned to factory setting.
It is recommended that important data, etc. be stored on floppy disks.

TROUBLESHOOTING

PROBLEM	POSSIBLE CAUSE/SOLUTION
• The speakers produce a “pop” sound whenever the power is turned ON or OFF.	This is normal and is no cause for alarm.
• When using a mobile phone, noise is produced.	Using a mobile phone in close proximity to the PSR-9000 may produce interference. To prevent this, turn off the mobile phone or use it further away from the PSR-9000.
• No sound results.	• The R1/R2/R3/L voice volume (Main Mixer) settings could be set too low. Make sure the voice volumes are set at appropriate levels. • The Local Control function could be turned off. Make sure Local Control is turned on. • The [MASTER VOLUME] controls or foot volume are turned all the way down. Set the [MASTER VOLUME] controls and foot volume to a reasonable listening level. • Are the desired parts turned on? • A pair of headphones is plugged into the PHONES jack. Unplug the headphones. • A plug is inserted in the LOOP SEND jacks. Unplug the LOOP SEND jacks. • Is the Footswitch connected to the FOOT VOLUME connector? • The [FADE IN/OUT] button is on and has reached the end of its duration, muting the sound. Press the [FADE IN/OUT] button so that its indicator goes out. • Check whether the Speaker is set to ON or OFF. When the Speaker is OFF, no sound results.
• Not all simultaneously-played notes sound. • Auto Accompaniment seems to “skip” when the keyboard is played.	You are probably exceeding the maximum polyphony of the PSR-9000. The PSR-9000 can play up to 126 notes at the same time — including voice R2, voice R3, voice L, auto accompaniment, song, and multi pad notes. When the maximum polyphony is exceeded, the earliest played notes will stop sounding, letting the latest played notes sound. This is referred to as “last-note priority.”
• The accompaniment or song does not play back even when pressing the [START/STOP] button. • The Multi Pads do not play back, even when one of the MULTI PAD buttons is pressed.	The MIDI Clock may be set to “EXTERNAL.” Make sure it is set to “INTERNAL”.
• The auto accompaniment does not start, even when Synchro Start is in standby condition and a key is pressed.	You may be trying to start accompaniment by playing a key in the right-hand range of the keyboard. To start the accompaniment with Synchro Start, make sure to play a key in the left-hand (accompaniment) range of the keyboard.
• Certain notes sound at the wrong pitch.	Make sure that the scale tuning value for those notes is set to “0”.
• Auto accompaniment chords are recognized regardless of the split point or where chords are played on the keyboard.	Check whether the fingering mode is set to “Full Keyboard” or not. If the Full Keyboard fingering mode is selected, chords are recognized over the entire range of the keyboard, irrespective of the split point setting.
• The Harmony function does not operate.	• Harmony cannot be turned on when the Full Keyboard fingering mode is selected. Select an appropriate fingering mode.

PROBLEM	POSSIBLE CAUSE/SOLUTION
• MIDI data is not transmitted or received via the MIDI A terminals, even when MIDI cables are connected properly.	The MIDI terminals can only be used when the HOST SELECT switch is set to “MIDI.” All other settings (“Mac,” “PC-1” and “PC-2”) are for direct transmission/ reception with a computer.
• If you experience distorted or out-of-tune sound from the Vocal Harmony feature, your vocal microphone may be picking up extraneous sounds (other than your voice) — the Auto Accompaniment sound from the PSR-9000, for example. In particular, bass sounds can cause mistracking of the Vocal Harmony feature.	The solution to this problem is to ensure that as little extraneous sound as possible is picked up by your vocal microphone: • Sing as closely to the microphone as possible. • Use a directional microphone. • Turn down the MASTER VOLUME, ACMP volume, or SONG volume control. • Separate the microphone from the instrument’s speakers as much as possible. • Cut the Low band via the 3 Band EQ function in the MIC SETUP display.
• When a voice is changed, the previously selected effect is changed.	This is normal, each voice has its own suitable preset values which are automatically recalled when the corresponding Voice Set parameters are turned on.
• There is a slight difference in sound quality between notes played on the keyboard. • Some voices have a looping sound. • Some noise or vibrato is noticeable at higher pitches, depending upon the voice.	This is normal and is a result of the PSR-9000’s sampling system.
• Some voices will jump an octave in pitch when played in the upper or lower registers.	Some voices have a pitch limit which, when reached, causes this type of pitch shift. This is normal.
• The auto-accompaniment chord does not change even when a different chord is played or the chord is not recognized.	• Are you sure you’re playing on the left-hand section of the keyboard? • You may be using single-finger type fingering in the fingered mode, or vice versa. Use the correct type of chord fingering for the selected auto-accompaniment fingering mode.
• The displayed disk free area value does not coincide with the actual value.	The displayed value is an approximate value.
• Disk save operations — particularly when saving wave data to floppy disk — take a long time.	This is normal. It takes approximately 8 minutes to save 1 megabyte of data to a floppy disk.
• Appropriate harmony notes are not produced by the Vocal Harmony feature.	Make sure you are using the appropriate method to specify the harmony notes for the current Vocal Harmony mode.
• The voice produces excessive noise.	Certain voices may produce noise, depending on the Harmonic Content and/or Brightness settings of the Mixing Console Filter. This is unavoidable due to the sound generation and processing system of the PSR-9000. To avoid noise, change the above mentioned settings.
• The sound is distorted or noisy.	• The MASTER VOLUME control may be turned up too high. • This may be caused by the effects. Try cancelling all unnecessary effects, especially distortion-type effects. • Some filter resonance settings in the Custom Voice Creator display can result in distorted sound. • Is the gain of the Low band set too high in the Master Equalizer display? • If this applies to the “Sampled” voice , you may have recorded the sample(s) at too high a level.
• A strange “flanging” or “doubling” sound occurs. • The sound is slightly different each time the keys are played.	• Are the R1 and R2 parts set to “ON” and both parts set to play the same voice? • If you are routing the MIDI OUT on the PSR-9000 to a sequencer and back to the MIDI IN, you may want to set Local Control to “off” to avoid MIDI “feedback.”

YAMAHA [Portable Keyboard] **Date:9-SEP-1999**
Model PSR-9000 **MIDI Implementation Chart** **Version : 1.0**

Function...		Transmitted	Recognized	Remarks
Basic	Default	1 - 16 *1	1 - 16 *2	
Channe	Changed	1 - 16 *1	1 - 16 *2	
	Default	3	3	
Mode	Message	x	x	
	Altered	**********	x	
Not		0 - 12	0 - 127	
Number:	True voice	**********	0 - 127	
Velocity	Note ON	o 9nH,v=1-127	o 9nH,v=1-127	
Note OFF	x 9nH,v=0	x		
After	Key's	x	x	
Touch	Ch's	o	o	
Pitch Bend		o	o 0-24 semi	
	0,32	o	o *1	Bank Select
	1,5,7,10,11	o	o *1	
	6,38	o	o *1	Data Entry
	64-67	o	o *1	
Control	71,74	o	o *1	Sound Controller
	72,73	x *3	o *1	Sound Controller
Change	84	x *3	o *1	Portamento Cntrl
	91,93,94	o	o *1	Effect Depth
	96,97	x	o *1	Data Inc,Dec
	98,99	o	o *1	NRPN LSB,MSB
	100,101	o	o *1	RPN LSB,MSB
Prog		o 0 - 127	o 0 - 127	
Change:	True #	**********		
System Exclusive		o	o	
:	Song Pos.	x	x	
Common:	Song Sel.	x	x	
:	Tune	x	x	
System:	Clock	o	o	
Real Time:	Commands	o	o	
Aux:	All Sound OFF	x	o(120,126,127)	
:	Reset All Cntrls	x	o(121)	
:	Reset All Cntrls	x	o(121)	
:	Local ON/OFFx	x		
:	All Notes OFFx	o(123-125)		
Mes-:	Active Sense	o	o	
sages:	Reset	x	x	
Notes:	*1,*2,*3 see next page.			

Mode 1: OMNI ON , POLY Mode 2: OMNI ON ,MONO o: Yes
Mode 3: OMNI OFF, POLY Mode 4: OMNI OFF,MONO x: No

*1 The tracks for each channel can be selected on the panel.
See page 43 for more information.

*2 The tone generator normally functions as a 16-channel multi-timber tone generator in response to MIDI input. MIDI messages therefore do not normally affect the panel voices or other panel settings.
The MIDI messages listed below, however,do affect the panel voice, style, Multi Pad, and song settings.

- MIDI MASTER TUNE, XG System parameter MASTER TUNE
- XG System paramerer TRANSPOSE
- System exclusive messages which change the REVERB, CHORUS or DSP EFFECT settings.
- XG MULTI EQ parameters

Also, the MIDI messages affect the panel settings when one of the following MIDI reception modes is selected.
These modes can be selected on the panel.

- RIGHT1, RIGHT2, RIGHT3, LEFT, KEYBOARD, ACMP RHYTHM1, ACMP RHYTHM2, ACMP BASS, ACMP CHORD1, ACMP CHORD2, ACMP PAD, ACMP PHRASE1, ACMP PHRASE2
- CHORD
- ROOT
- OFF

*3 These Control Change Messages are not transmitted by PSR-9000 panel operation, but may be transmitted by the ACCOMPANIMENT or SONG playing.

●PN3 Circuit Board

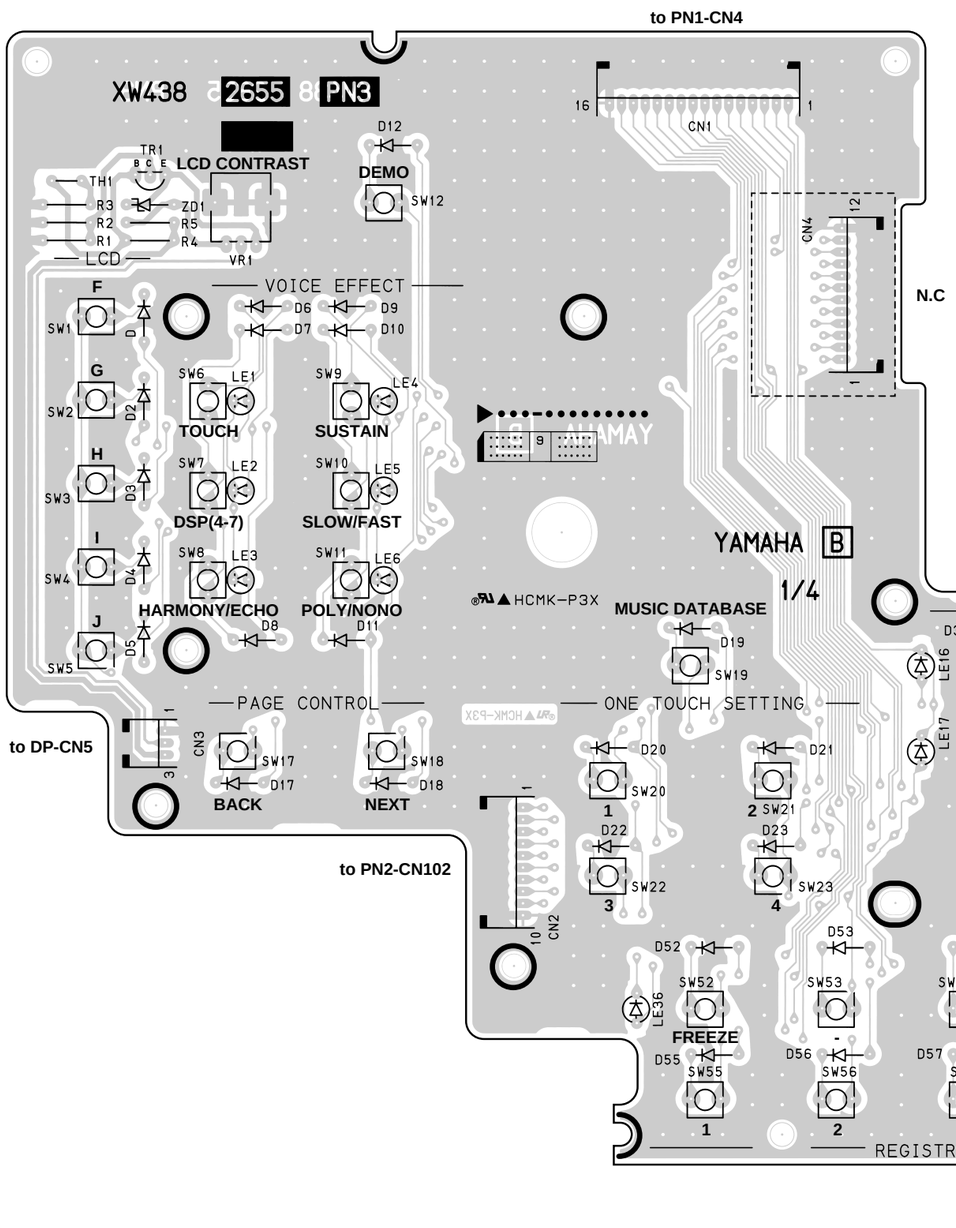

Component side

PN3: V419710

●PN3 Circuit Board

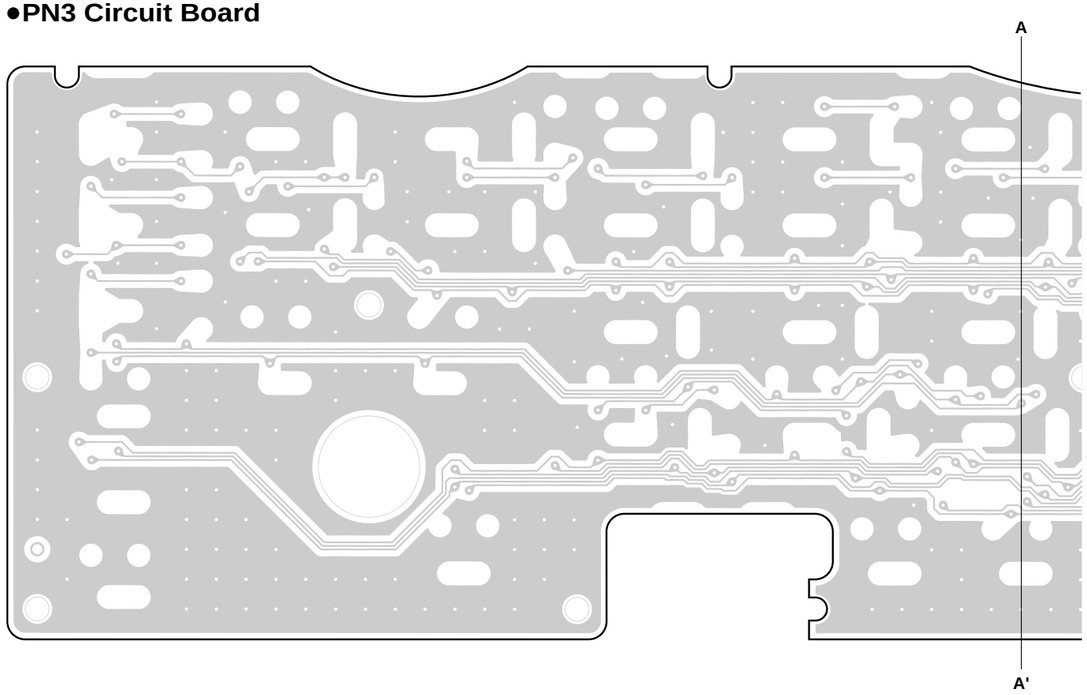

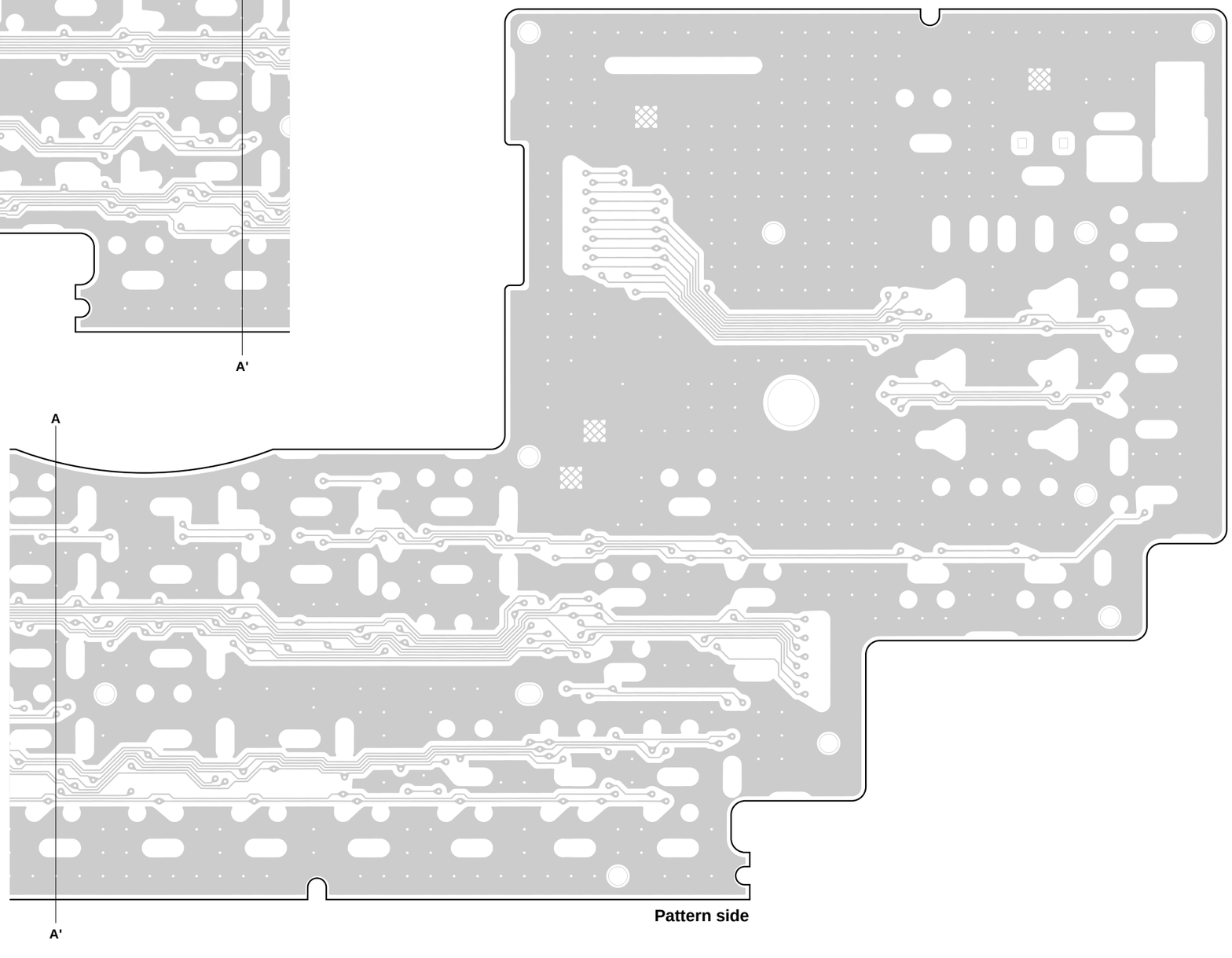

Pattern side

PN3: V419710

●AMP Circuit Board

to AM-CN4

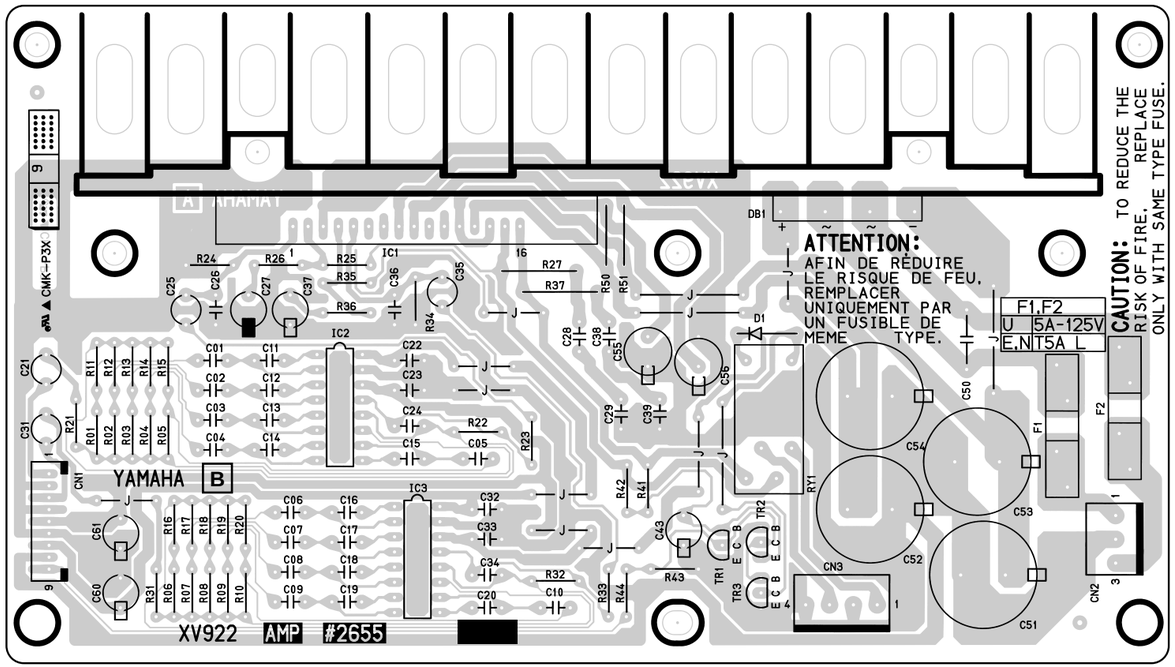

to Power transformer

to NET-CN1

Component side

AMP: V372790

●MIC-VR Circuit Board

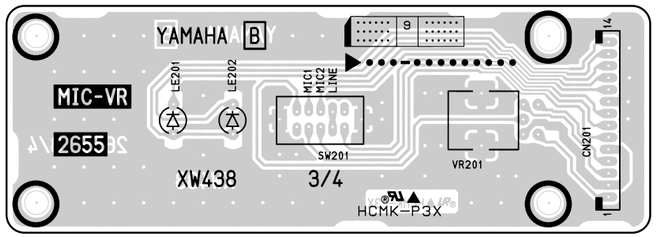

●MIC-HP Circuit Board

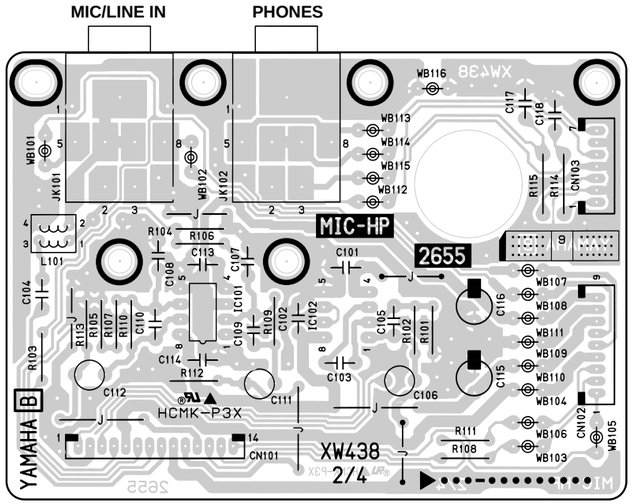

●DM Circuit Board

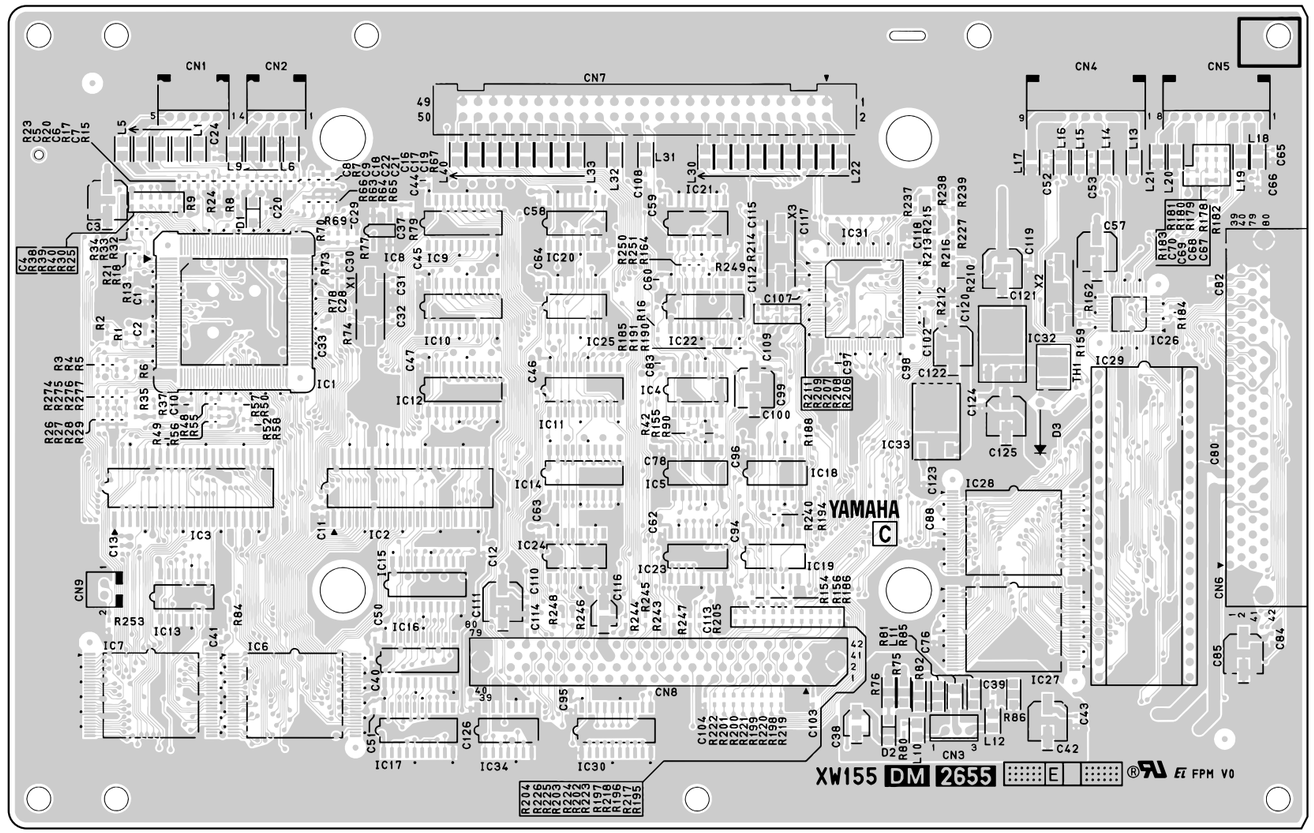

●AJACK Circuit Board

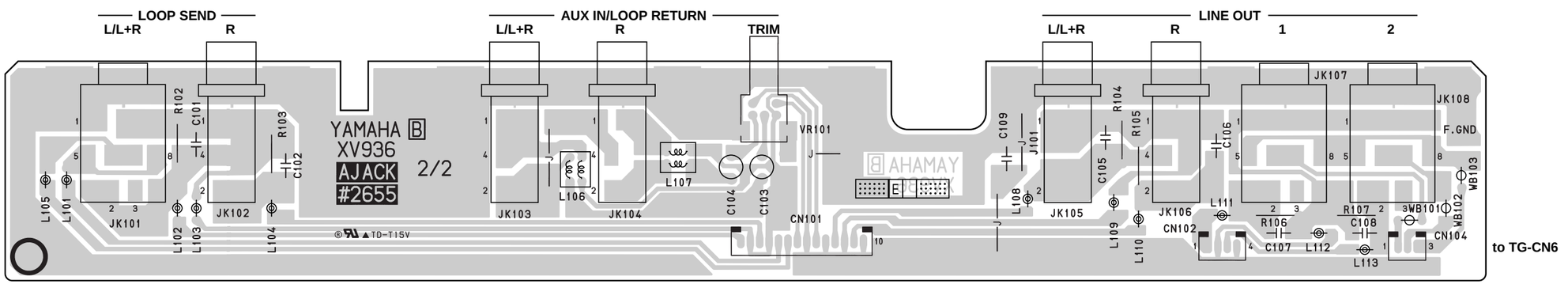

MIC-VR:	V419770
MIC-HP:	V419760
DM:	V410110
AJACK:	V458200

●DM Circuit Board

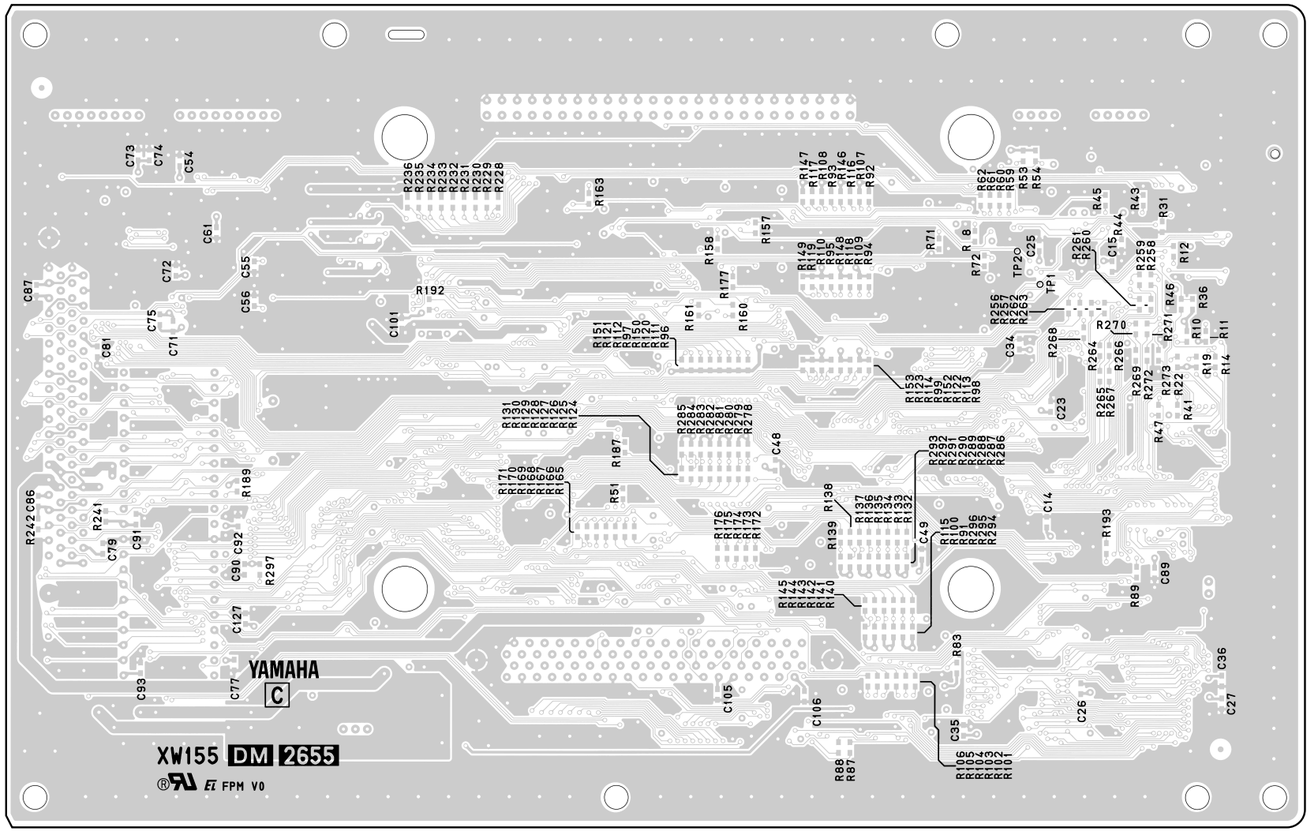

Pattern side

●VSEL Circuit Board

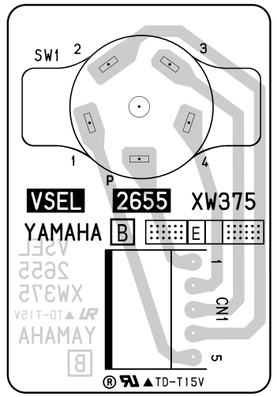

to FU-CN5

Component side

●NET Circuit Board

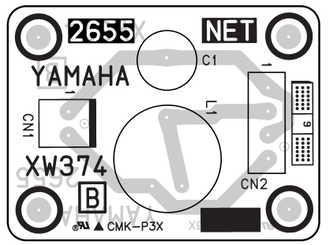

to AMP-CN3

to Speaker

Component side

●DJACK Circuit Board

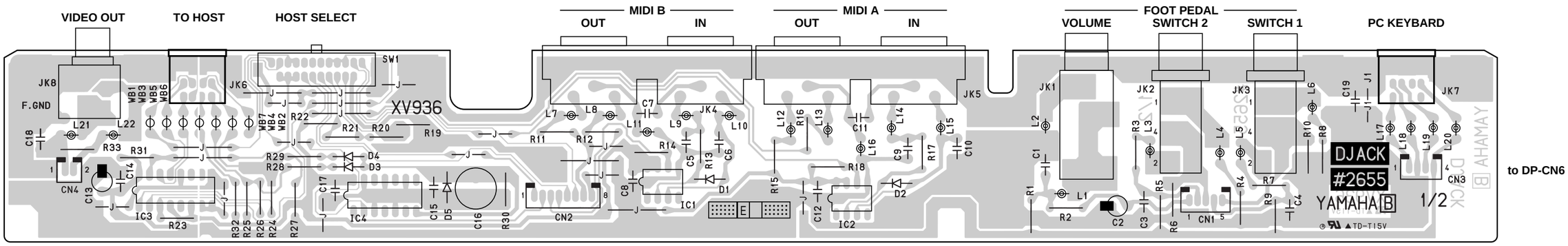

to DP-CN7

to DM-CN5

to DM-CN1

to DP-CN6

Component side

DM: V410110
VSEL: V427230
NET: V427210
DJACK: V427060

●TG Circuit Board

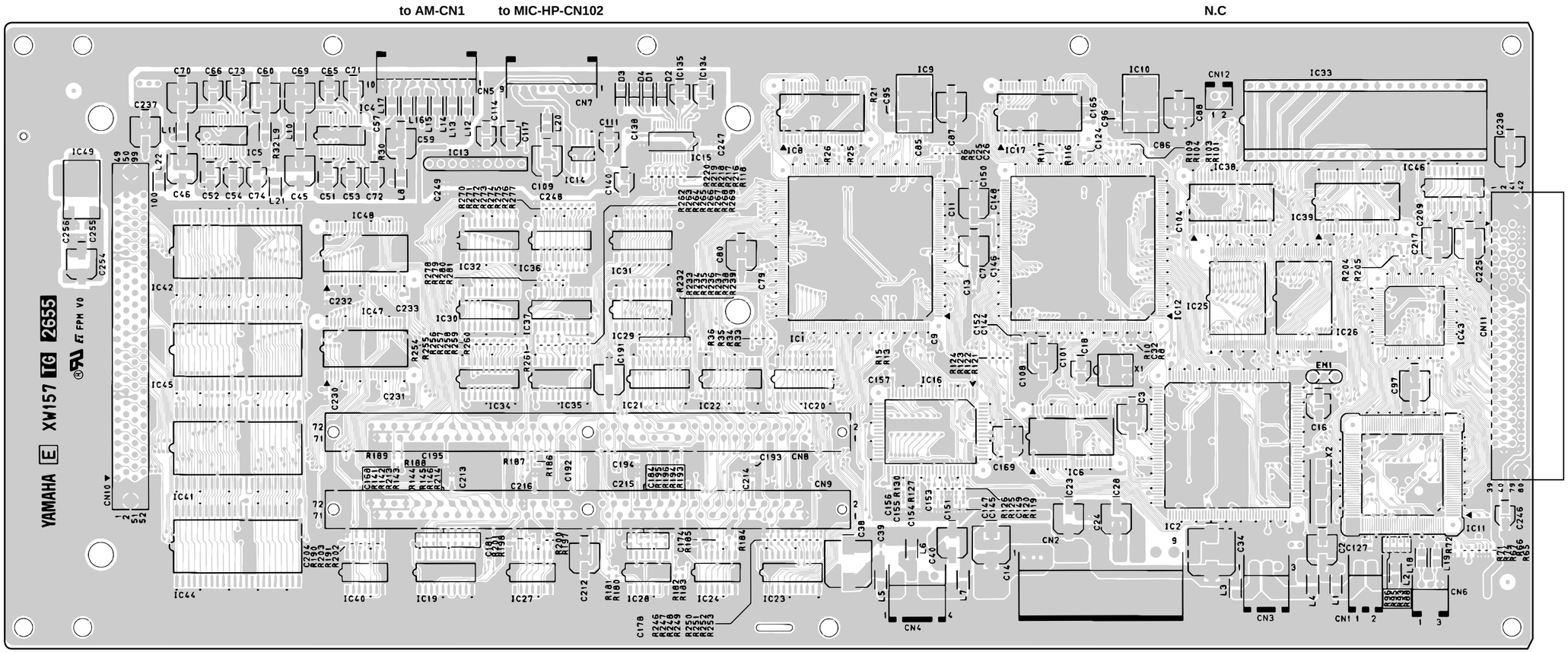

●PN2 Circuit Board

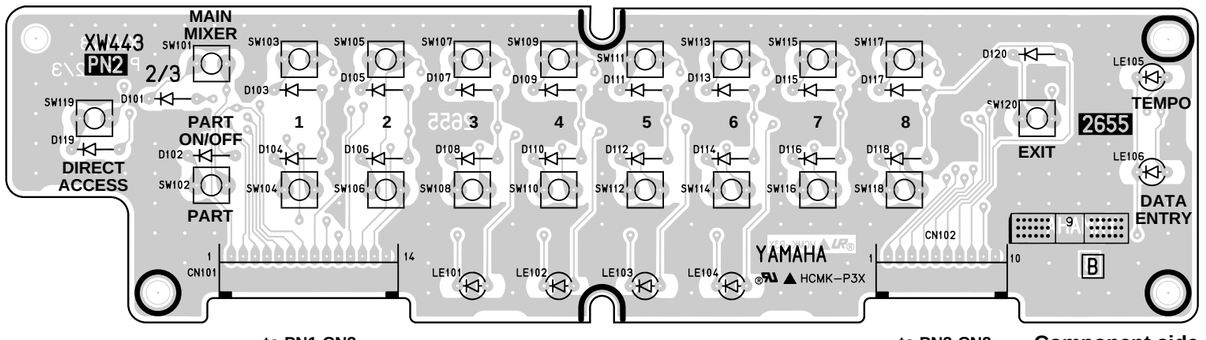

Connection

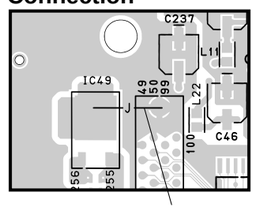

Pattern cut

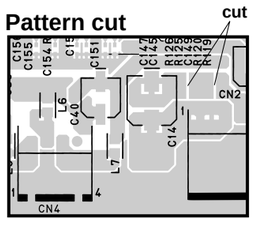

TG: V410130
PN2: V419720

●TG Circuit Board

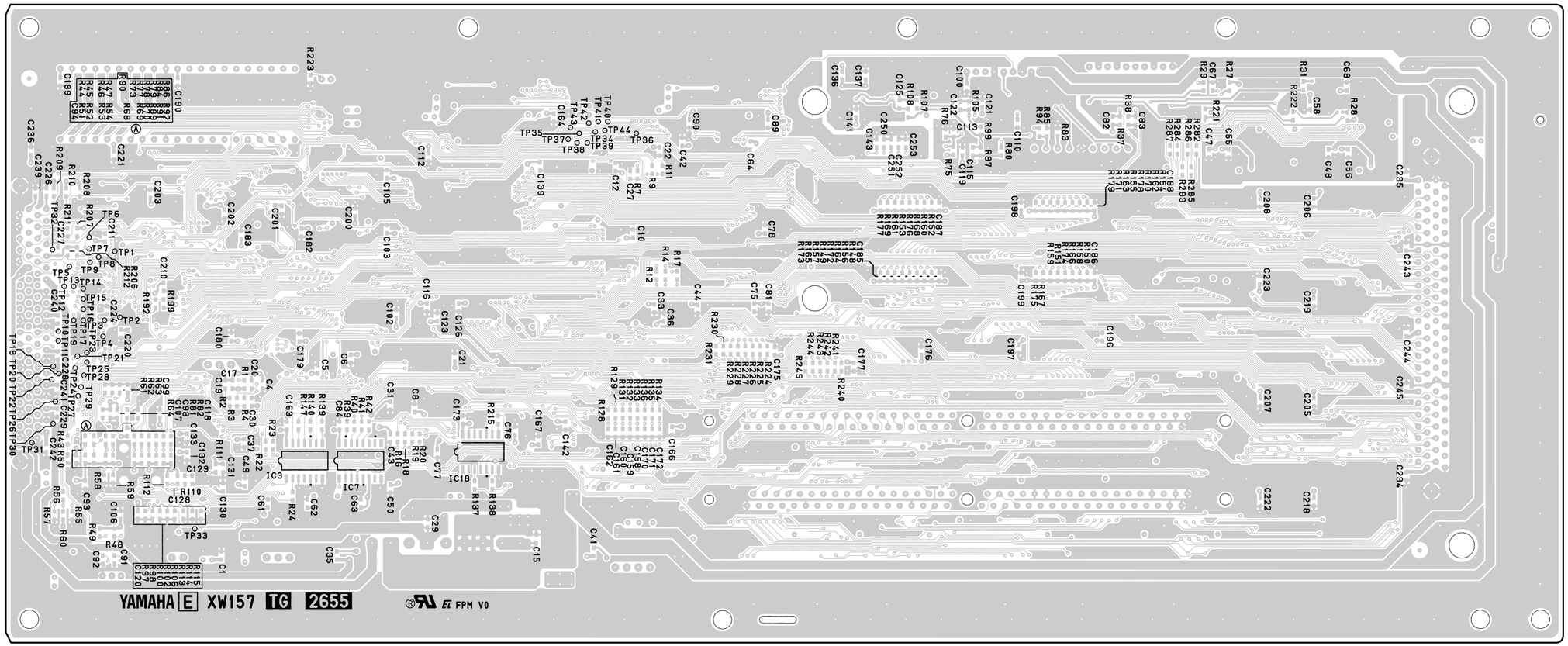

Pattern side

Pattern cut

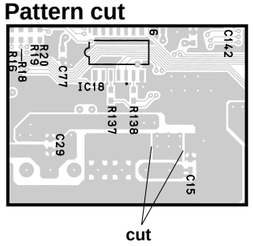

●PN2 Circuit Board

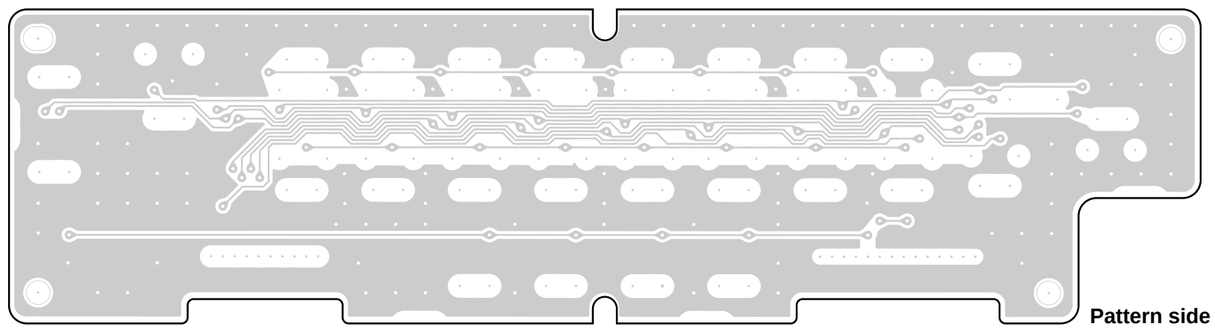

Pattern side

TG: V410130
PN2: V419720

●PN1 Circuit Board

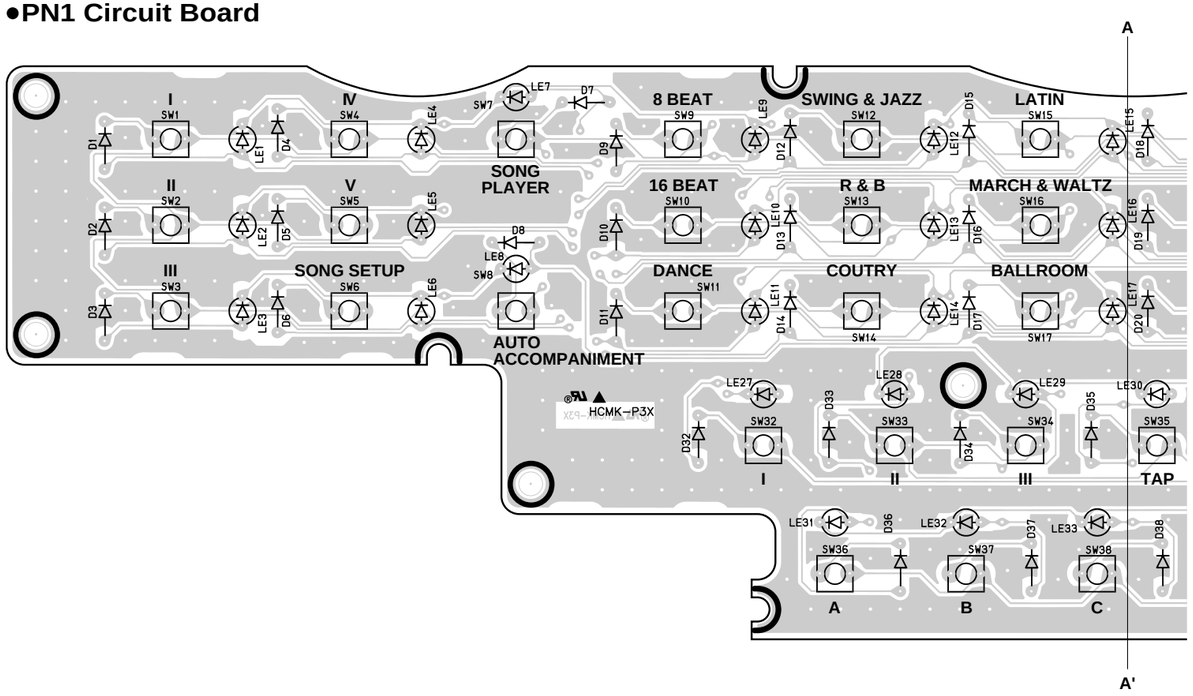

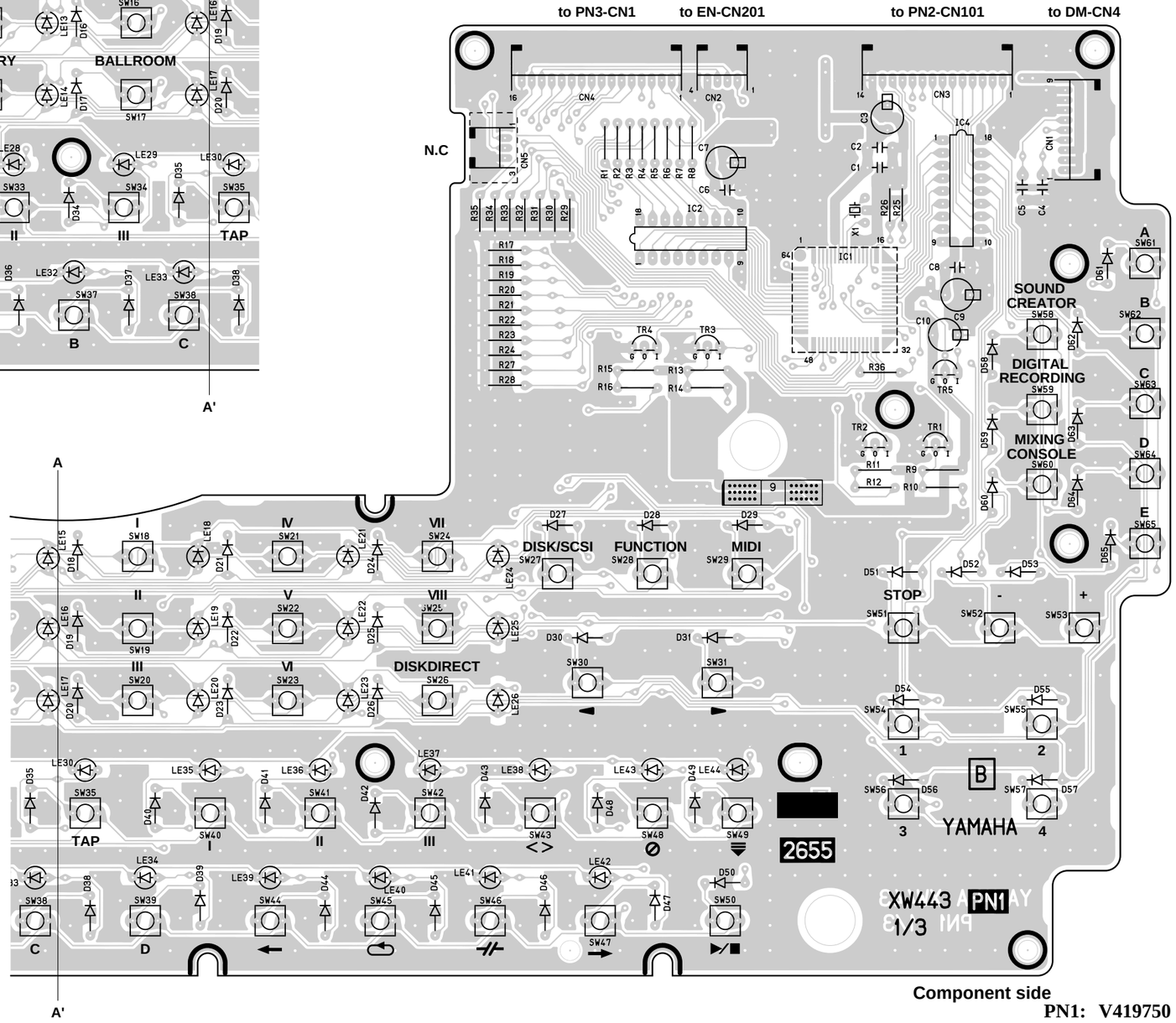

Component side

PN1: V419750

●PN1 Circuit Board

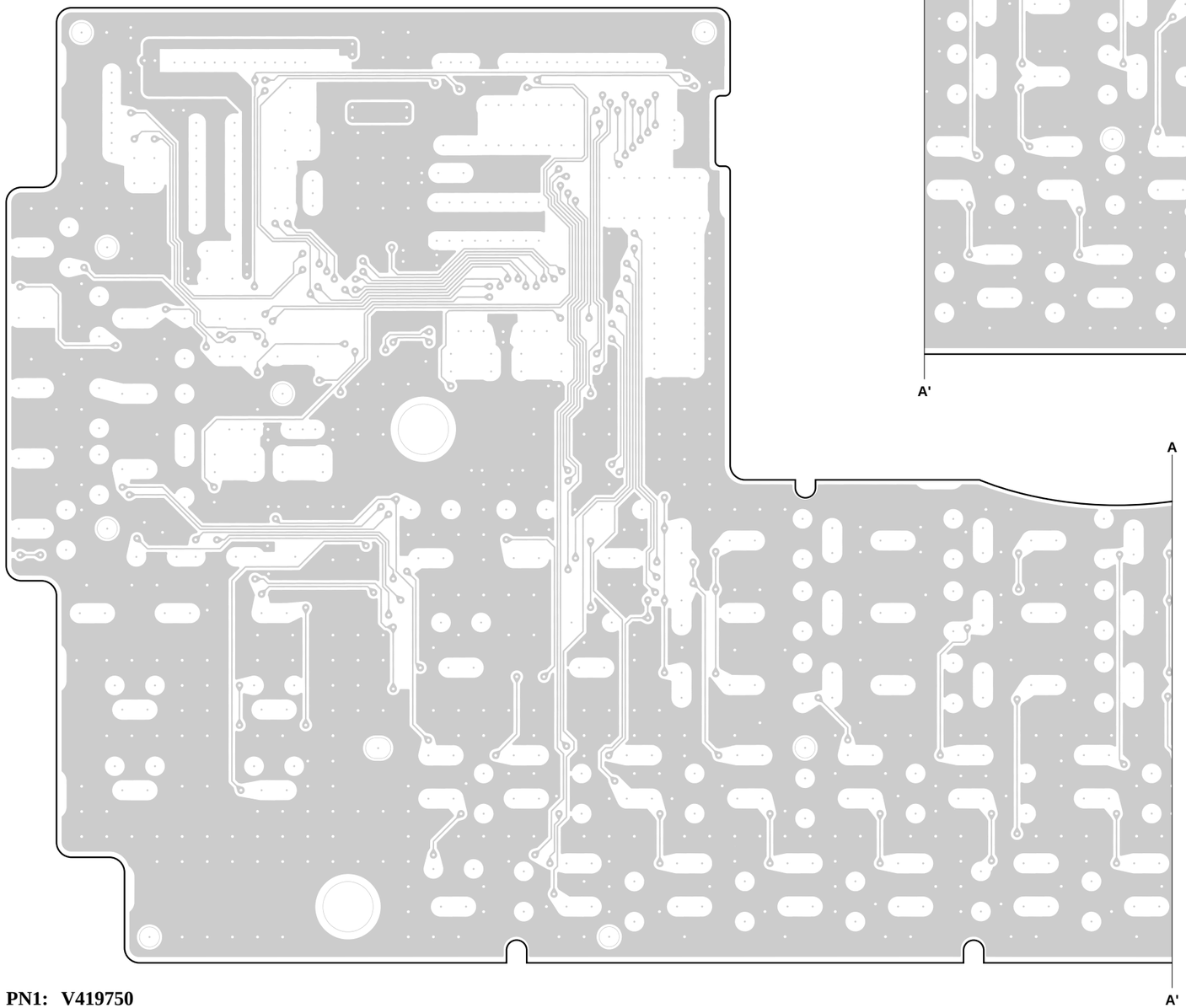

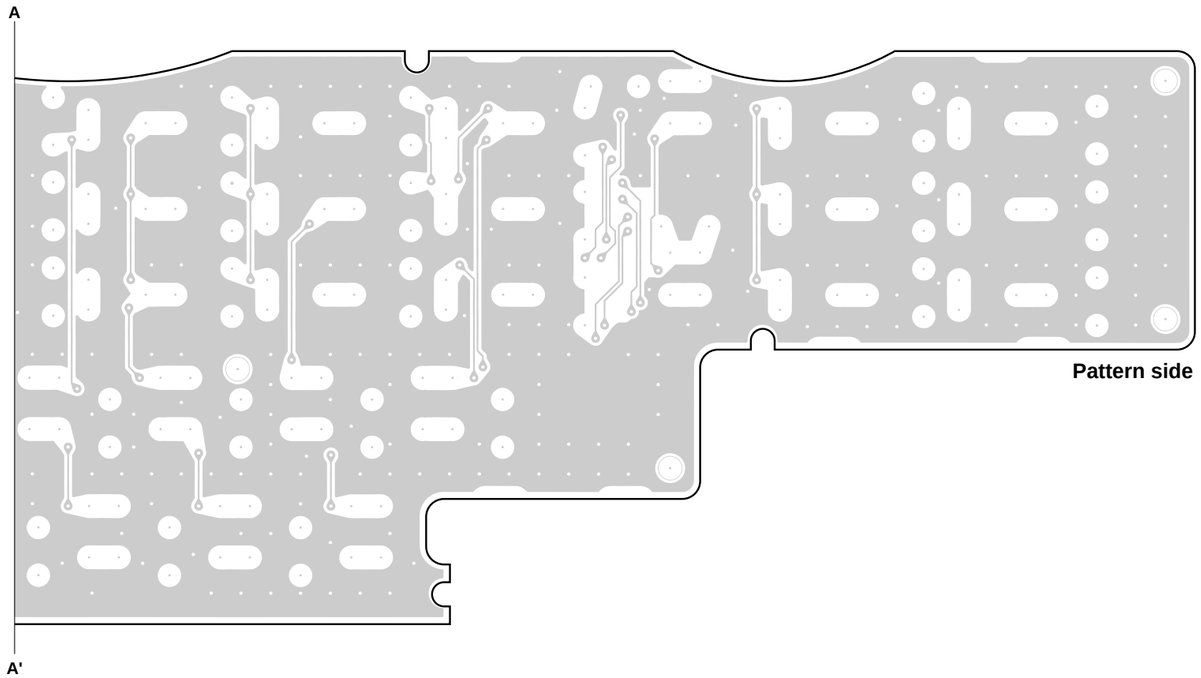

PN1: V419750

■CIRCUIT BOARDS

• CONTENTS

DP Circuit Board	V4101200	(XW156C0)	P26
FU Circuit Board	V4272800	(XV921B0)	P26
AM Circuit Board	V3558900	(XV931C0)	P27
INV Circuit Board	VY638900	(VT122A0)	P27
EN Circuit Board	V4197300	(XW443B0)	P27
MV Circuit Board	V4197800	(XW438B0)	P27
SCSI Circuit Board	V4271500	(XW083C0)	P27
MIC/VR Circuit Board	V4197700	(XW438B0)	P28
MIC/HP Circuit Board	V4197600	(XW438B0)	P28
DM Circuit Board	V4101100	(XW155C0)	P28
AJACK Circuit Board	V4582000	(XV936B0)	P28
VSEL Circuit Board	V4272300	(XW375B0)	P29
NET Circuit Board	V4272100	(XW374B0)	P29
DJACK Circuit Board	V4270600	(XV936B0)	P29
TG Circuit Board	V4101300	(XW157E0)	P30
PN2 Circuit Board	V4197200	(XW443B0)	P30
PN1 Circuit Board	V4197500	(XW443B0)	P32
PN3 Circuit Board	V4197100	(XW438B0)	P34
AMP Conversion Circuit Board	V3727900	(XV922A0)	P36

●DP Circuit Board

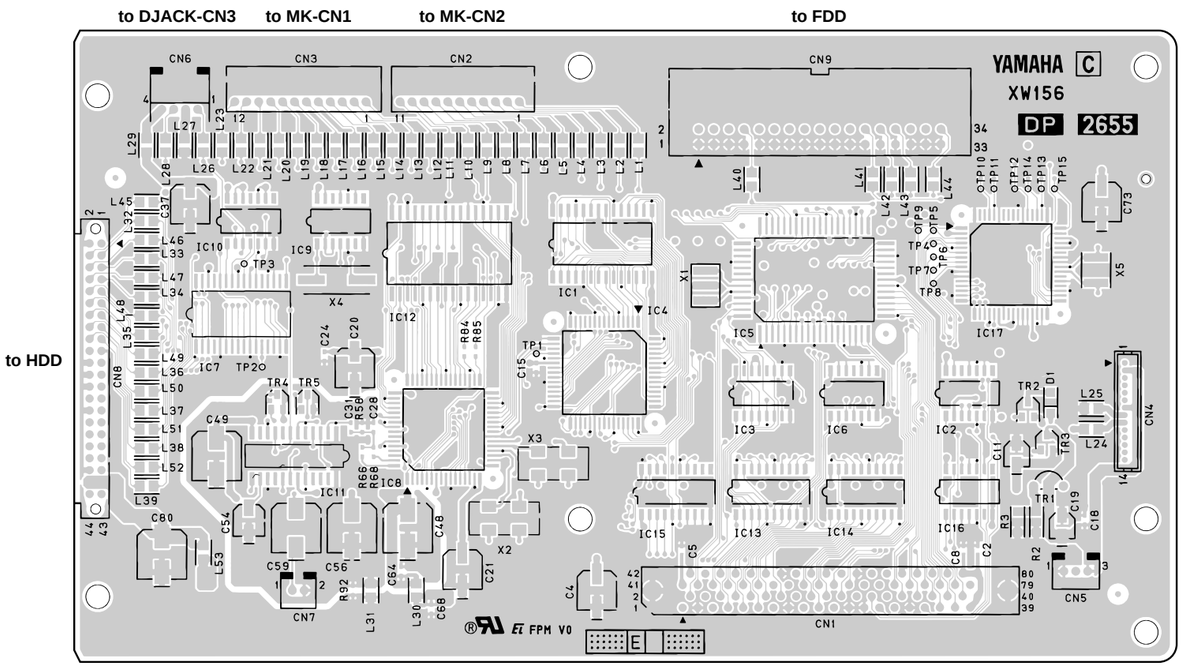

●FU Circuit Board

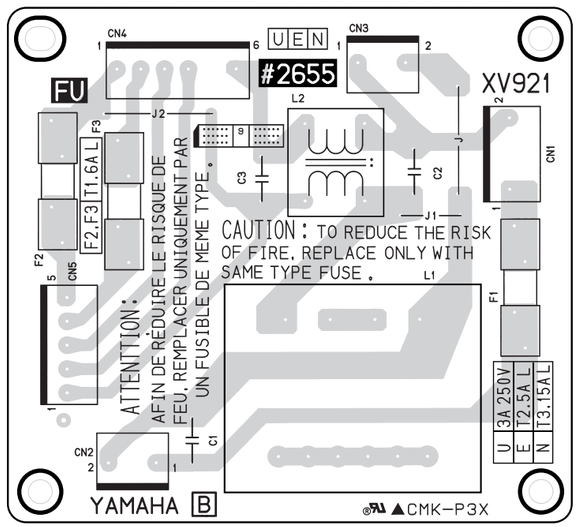

to DJACK-CN4

Component side

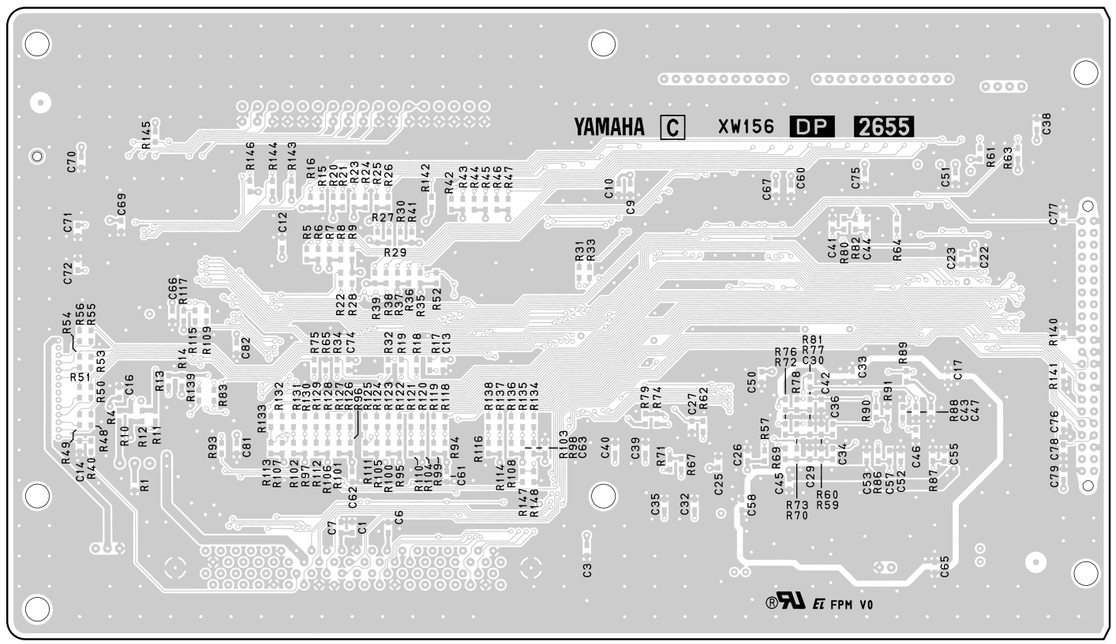

Pattern side

DP: V410120
FU: V427280

●AM Circuit Board

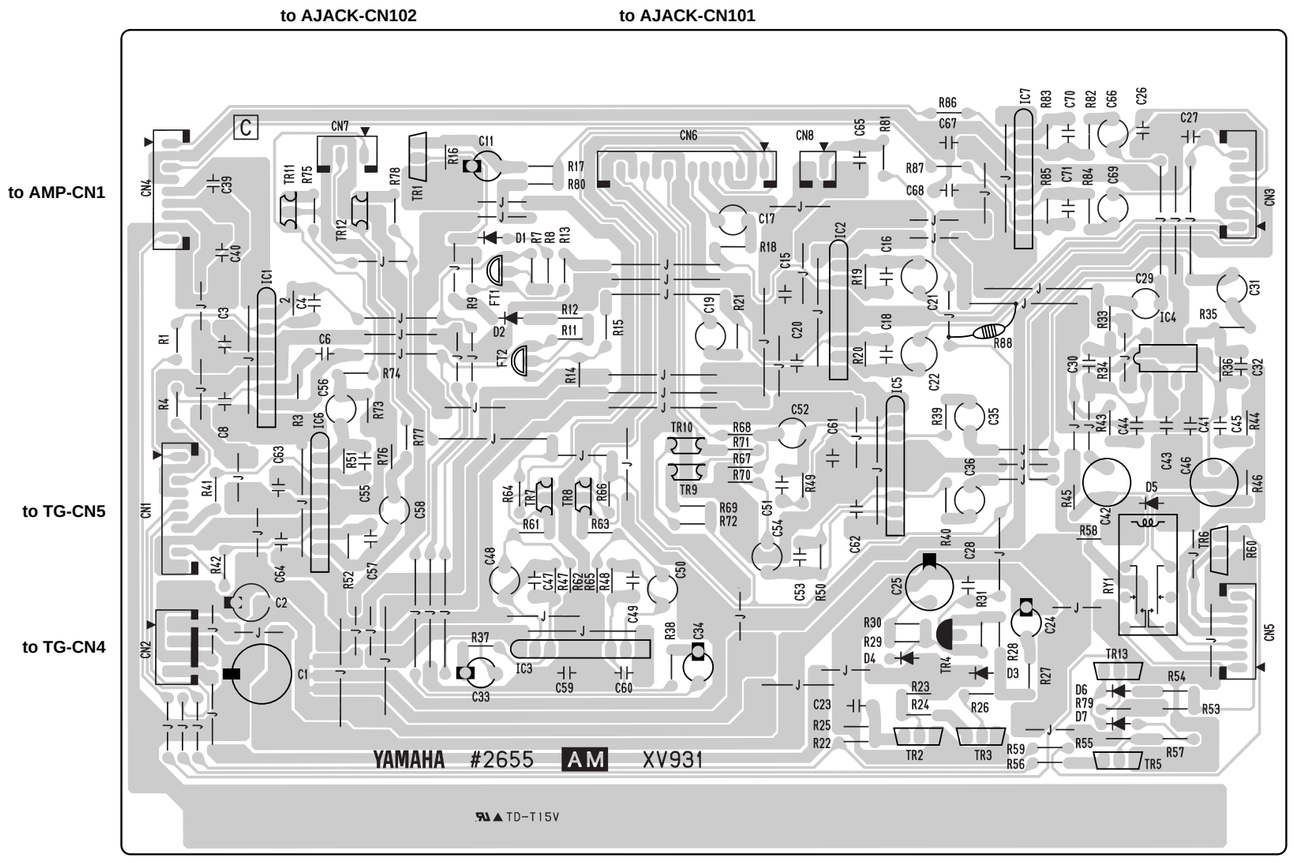

Component side

●EN Circuit Board

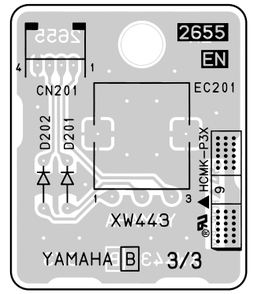

Component side

●MV Circuit Board

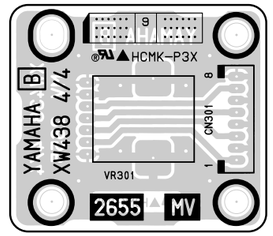

Component side

●INV Circuit Board

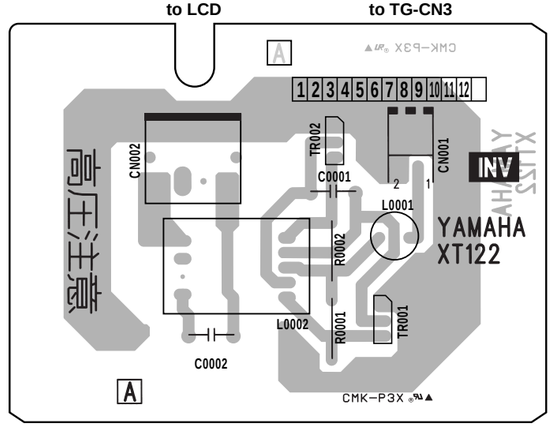

Component side

●SCSI Circuit Board

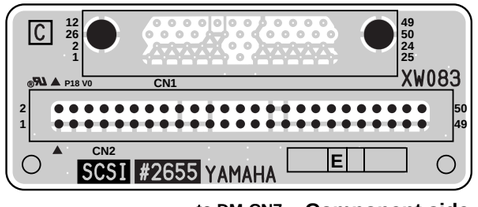

Component side

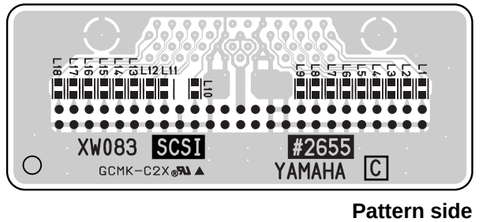

Pattern side

AM: V355890
INV: VY63890
EN: V419730
MV: V419780
SCSI: V427150

PORTATONE

PSR-9000

PARTS LIST

■ **CONTENTS**

OVERALL ASSEMBLY..... 2
SPEAKER BOX UNIT(Left and right) 5
UPPER CASE ASSEMBLY..... 6
KEYBOARD ASSEMBLY 8
LCD ASSEMBLY 8
FDD ASSEMBLY 9
POWER SUPPLY UNIT 10
WHEEL ASSEMBLY 12
ELECTRICAL PARTS 13

Notes: DESTINATION ABBREVIATIONS

A: Australian model	J: Japanese model
B: British model	U: U.S. model
C: Canadian model	V: General export model (110V)
E: European model	W: General export model (220V)
H: North European model	X: General export model
I: Indonesian model	Y: Export model

- The numbers in "QTY" shows quantities for each unit.
- The parts with "--" in "Parts No." are not available as spare parts.
- The mark " } " in the remarks column indicates that these parts are interchangeable.
- The second letter of the shaded ( ) part number is I, not one.

■ **WARNING**

Components having special characteristics are marked ⚠ and must be replaced with parts having specification equal to those originally installed.

■OVERALL ASSEMBLY

	REF NO.	PART NO.	DESCRIPTION		部品名	REMARKS		QTY	RANK
			OVERALL ASSEMBLY		総組立	PSR-9000			
		--	Overall Assembly	E	総組立	E,B	(V363660)		
		--	Overall Assembly	U	総組立	U	(V363670)		
		--	Overall Assembly	N	総組立	N	(V363680)		
	10	--	Upper Case Assembly	E	上ケースAss'y	E,B	(V364810)		
	10	--	Upper Case Assembly	N	上ケースAss'y	N	(V364820)		
	10	--	Upper Case Assembly	U	上ケースAss'y	U	(V364830)		
	20	VN399200	Keyboard Assembly	C61K6	LC鍵盤Ass'y				29
	30	CB040540	Cord Binder	S-72B L=50	束線止め			7	01
	40	EP600250	Bind Head Tapping Screw-B	3.0X8 MFZN2Y	+バインドBタイト			55	01
	50	EP640130	Bind Head Tapping Screw-B	4.0X10 MFZN2Y	+バインドBタイト			3	01
	60	--	Connector Assembly	MKLC 1	MKLC束線1		(V414830)		
	70	--	Connector Assembly	MKLC 2	MKLC束線2		(V414840)		
	80	--	Connector Assembly	MKLC 3	MKLC束線3		(V414850)		
	90	--	LCD Assembly		LCD Ass'y		(V387800)		
	100	--	Floppy Disk Drive Assembly		FDD Ass'y		(V364880)		
	120	VS730200	Plain Washer	3.5X12 0.8 MFZN2	特殊平座金			8	
	130	--	Holder, Speaker C		スピーカ固定金具C		(V387400)	2	
	140	--	Holder, AM P.C.B.		AMシート固定金具		(V387580)		
	150	--	Shield Cover	AM	シールドカバーAM		(V389130)		
*	160	V3558900	Circuit Board	AM	AMシート				
	170	--	Connector Assembly	MDAC	MDAC束線		(V414570)		
	180	--	Connector Assembly	POWER 2 L=470	電源束線2		(V414500)		
	190	--	Holder, DM P.C.B.		DMシート固定金具		(V387540)		
	200	--	Shield Box	UPPER	シールドボックス上		(V387750)		
*	210	V4101100	Circuit Board	DM	DMシート				
*	220	V4101200	Circuit Board	DP	DPシート				
*	230	V4101300	Circuit Board	TG	TGシート				
	260	--	Shield Box	LOWER	シールドボックス下加工品		(V484310)		
	270	--	Speaker Unit	LEFT	スピーカユニットL		(V393870)		
	280	--	Speaker Unit	RIGHT	スピーカユニットR		(V427120)		
	290	VA121600	Bushing		ゴムブッシュ			6	01
	300	VA121400	Spacer		スペーサー			2	02
	310	EP600750	Bind Head Tapping Screw-B	4.0X14 MFZN2Y	+バインドBタイト			30	01
	320	--	Power Supply Unit	E	電源ユニット	E,B	(V393840)		
	320	--	Power Supply Unit	U	電源ユニット	U	(V393850)		
	320	--	Power Supply Unit	N	電源ユニット	N	(V393860)		
	330	EG340030	Bind Head Screw-1	4.0X12 MFZN2Y	+バインド小ネジ			8	01
*	340	V3648700	Lower Case Assembly		下ケースAss'y				
	340a	CB043750	Foot	BL T1.6	ゴム足			6	01
	350	--	Holder, HDD		HDD固定金具		(V387740)		
	360	VG048000	Bind Head Screw	3.0X4 MFNI33	+バインド小ネジ			4	01
*	370	V3877300	Bottom Cover		底面蓋				07
	380	VP157800	Bonding Head Screw	3.0X8 MFZN2BL	+ボンディング小ネジ			10	01
	390	CB069250	Cord Holder	BK-1	インシュロックタイ				01
*	420	V4271900	LCD Protector		LCD保護板				10
	430	--	Adhesive Tape	12X50	フィラメントテープ		(2154500)		
	440	VB748400	Bind Head Screw	3.0X8 MFNI33	+バインド小ネジ			4	01
	450	EP030260	Bind Head Tapping Screw-1	3.5X16 MFZN2BL	+バインドTP1種			3	01
			ACCESSORIES		付属品				
*		V4272400	Music Rest Assembly		譜面板Ass'y				
⚠		VT015900	AC Cord Set	E 2P 2.5m	電源コードセット	E,N			05
⚠		VT015800	AC Cord Set	U2P 2.44m 7A	電源コードセット	U			06
⚠		VT016000	AC Cord Set	B 2P 2.5m	電源コードセット	B			08
⚠		VK726100	Connector	CCT5902	電源コネクタ	N			03
*		V3873000	Floppy Disk		フロッピーディスク				04

*: New parts

RANK: Japan only

●Upper Case (Top View)

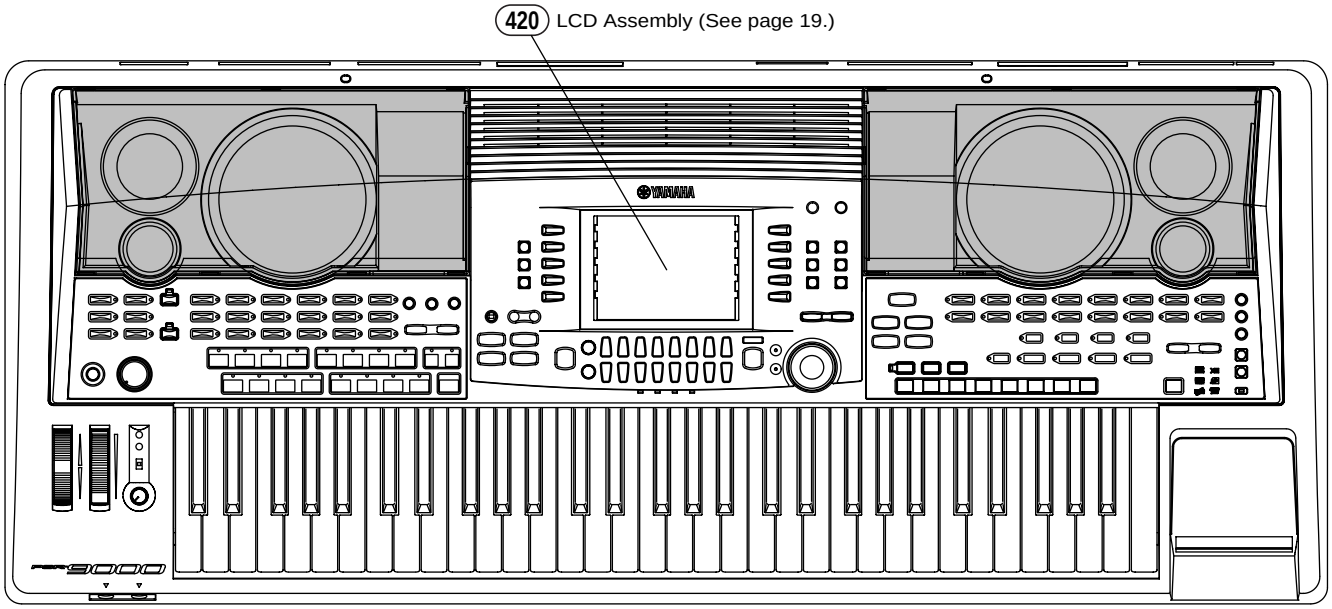

●Lower Case (Bottom View)

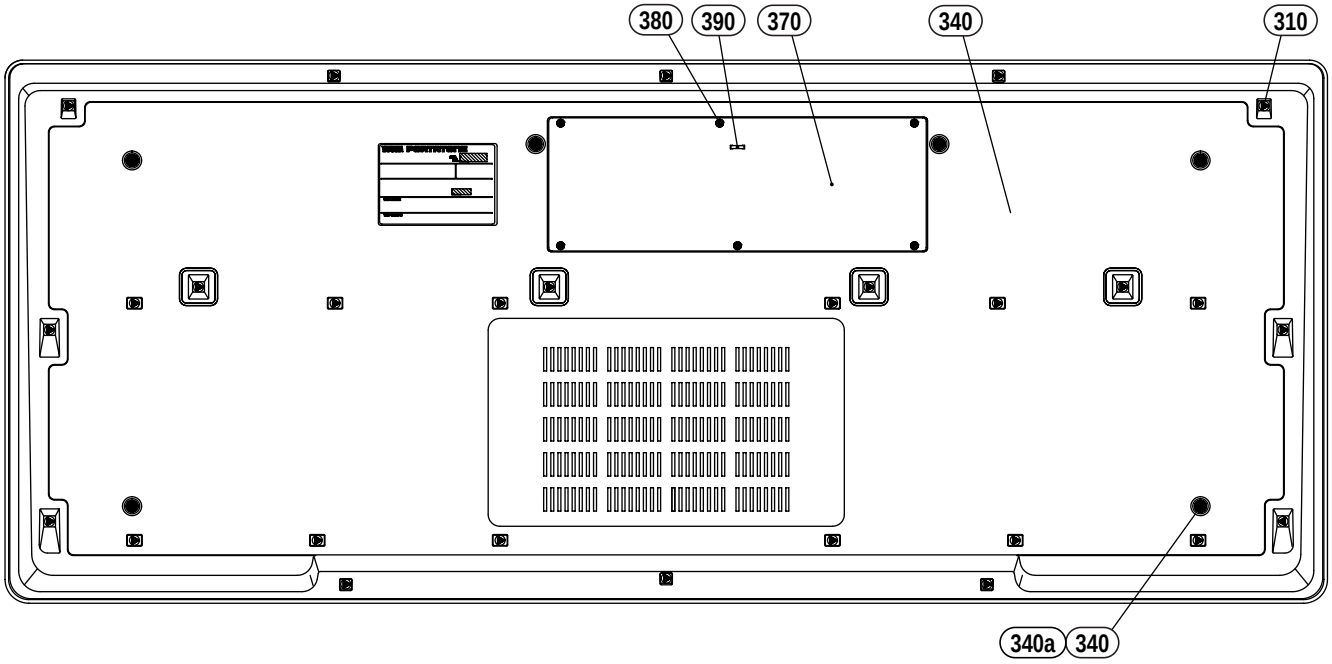

●Lower Case (Insid View 1)

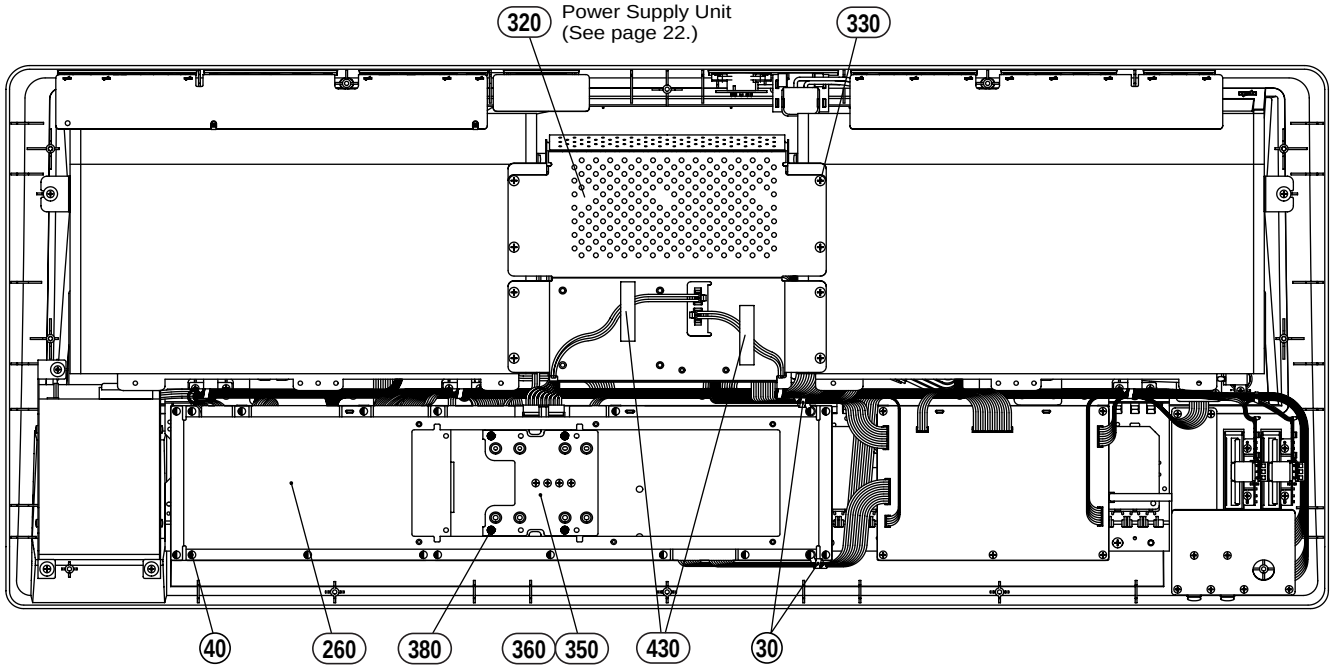

●Lower Case (Insid View 2)

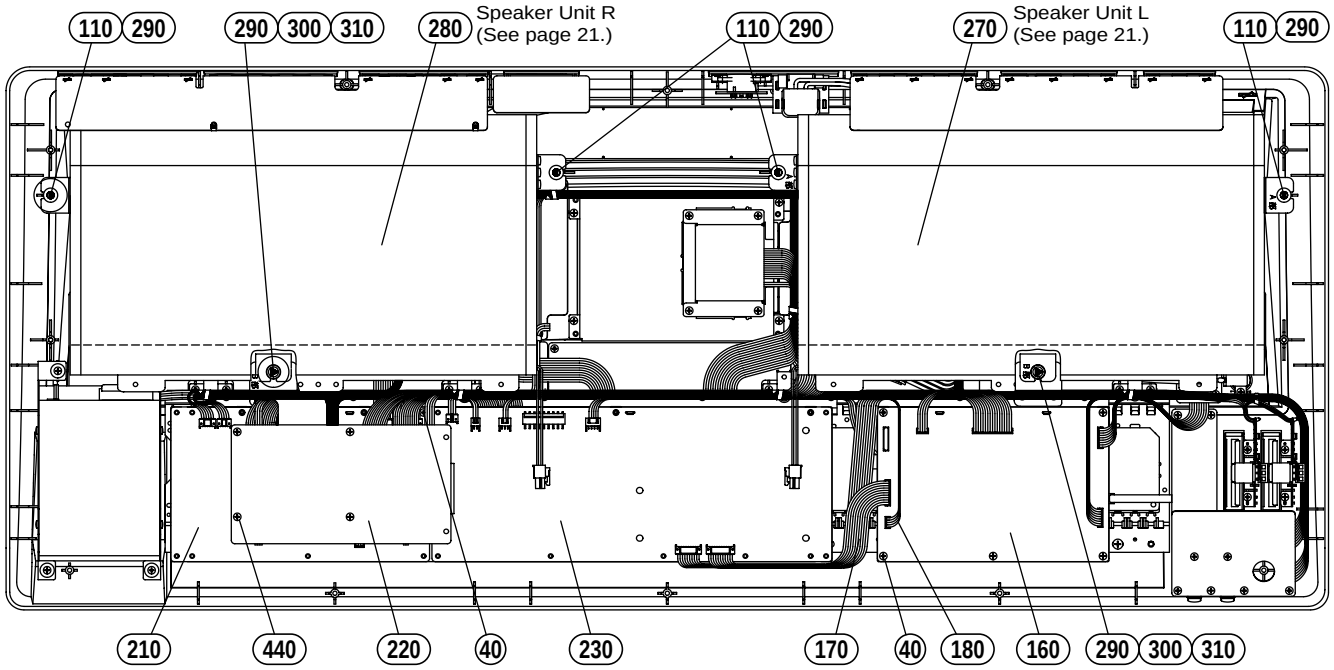

●Lower Case (Insid View 3)

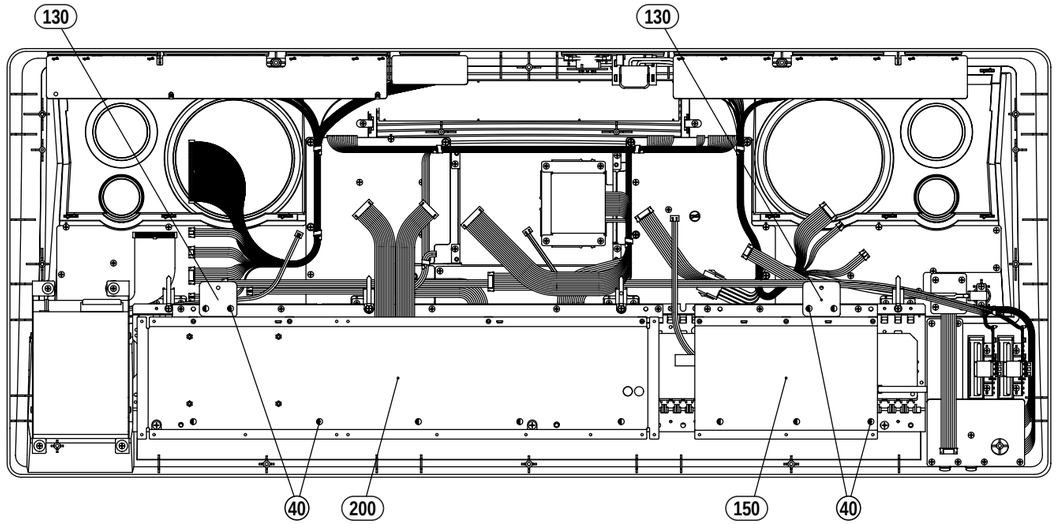

●Lower Case (Insid View 4)

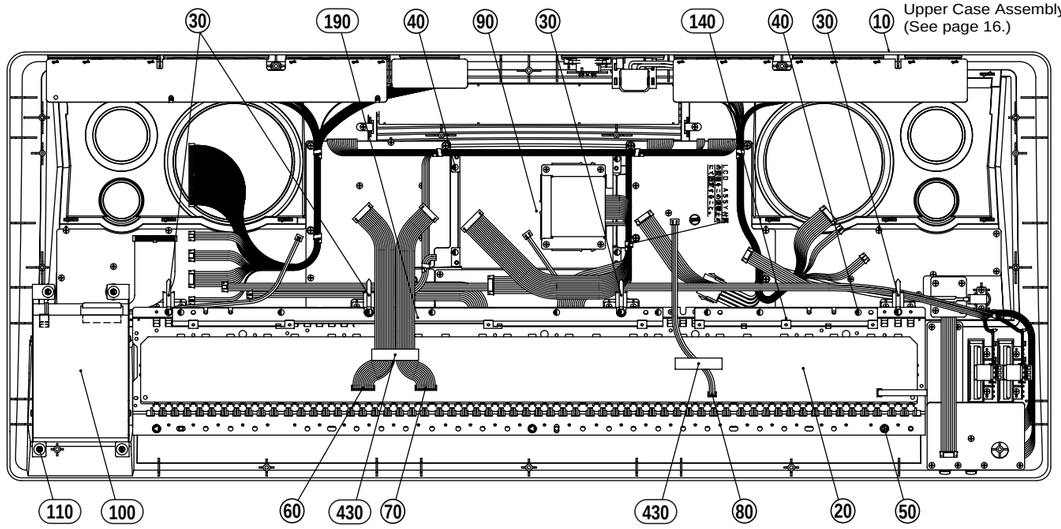

Upper Case Assembly
(See page 16.)

■SPEAKER BOX UNIT (Left and Right)

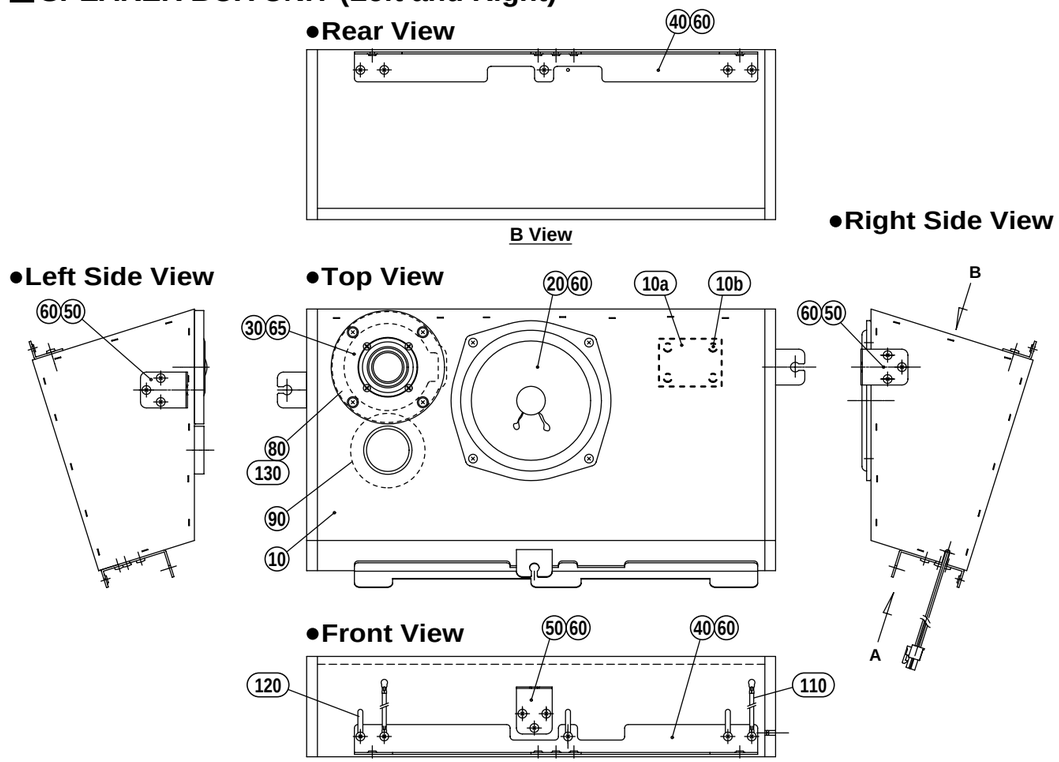

REF NO.	PART NO.	DESCRIPTION		部品名	REMARKS	QTY	RANK
		SPEAKER BOX UNIT		スピーカユニット	PSR-9000		
	--	Speaker Box Unit	LEFT	スピーカユニット L	(V393870)		
	--	Speaker Box Unit	RIGHT	スピーカユニット R	(V427120)		
* 10	V4370300	Speaker Box	PT LEFT	ボックス L 木部集成			
* 10	V4370400	Speaker Box	PT RIGHT	ボックス R 木部集成			
10a	CB046030	Support, PCB	KGLS-04T	基板サポート		4	01
* 10b	V4272100	Circuit Board	NET	NETシート			
* 20	XV992A00	Speaker	13.0cm 8 ohm 50 W	スピーカ			09
* 30	XV993A00	Speaker	3.0cm 8 ohm 25 W	スピーカ			08
40	--	Holder, Speaker B		スピーカ固定金具 B	(V437450)	2	
50	--	Holder, Speaker A		スピーカ固定金具 A	(V387380)	3	
60	EP030260	Bind Head Tapping Screw-1	3.5X16 MFZN2BL	+バインドTP1種		22	01
65	EP030470	Bind Head Tapping Screw-1	3.5X20 MFZN2BL	+バインドTP1種		4	01
80	--	Vibration-proof Form	PE	防振フォーム	(V510380)		
90	--	Blind Form	PE	目隠しフォーム	(V510390)		
110	--	GND Wire 12		アース線12	(V523030)	2	
120	CB040540	Cord Binder	S-72B L=50	束線止め	LEFT	3	01
130	--	Vibration-proof Form	PE	防振フォーム	RIGHT (V528890)		

*: New parts

RANK: Japan only

■UPPER CASE ASSEMBLY

●Upper Case (Top View)

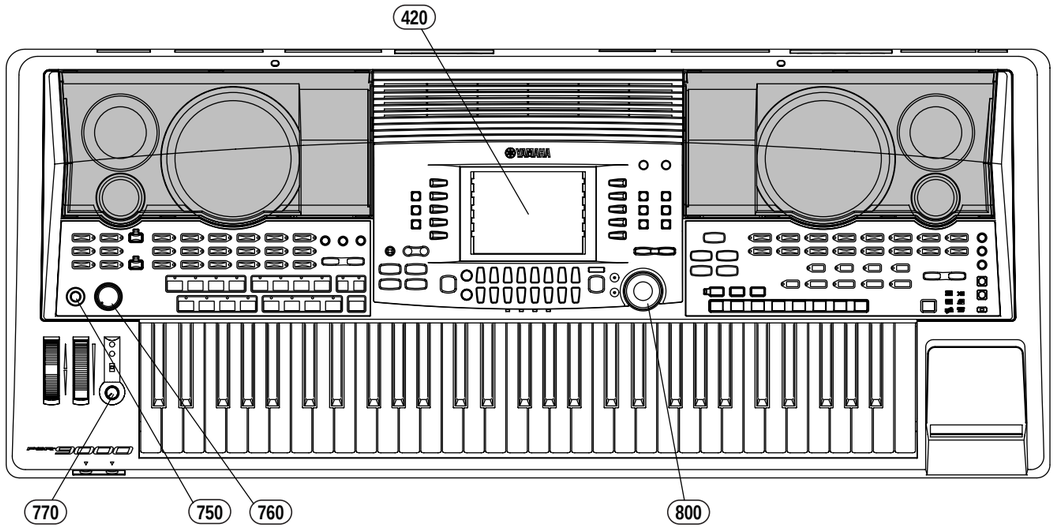

●Upper Case (Insid View 2)

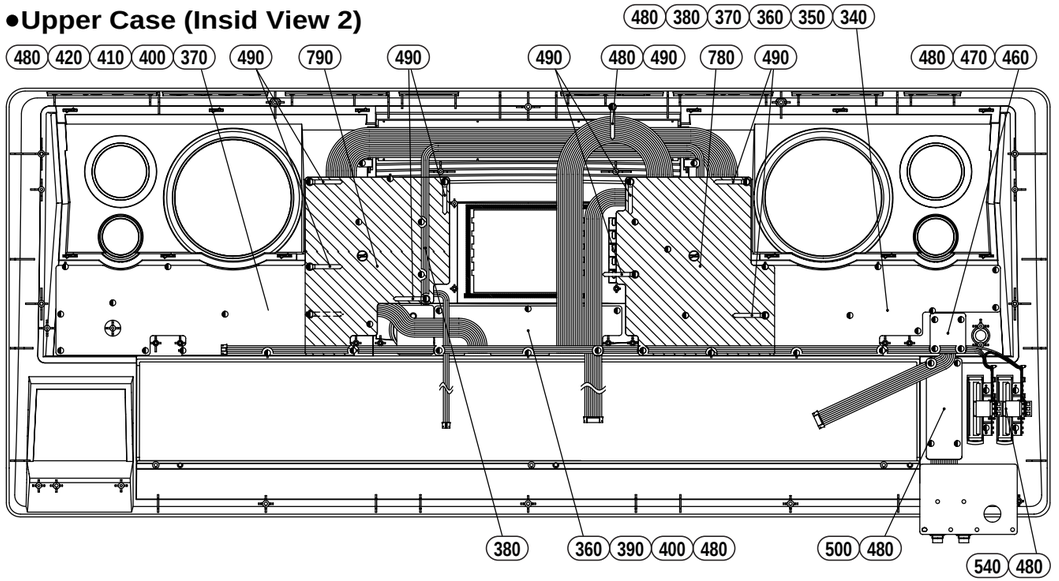

●Upper Case (Insid View 1)

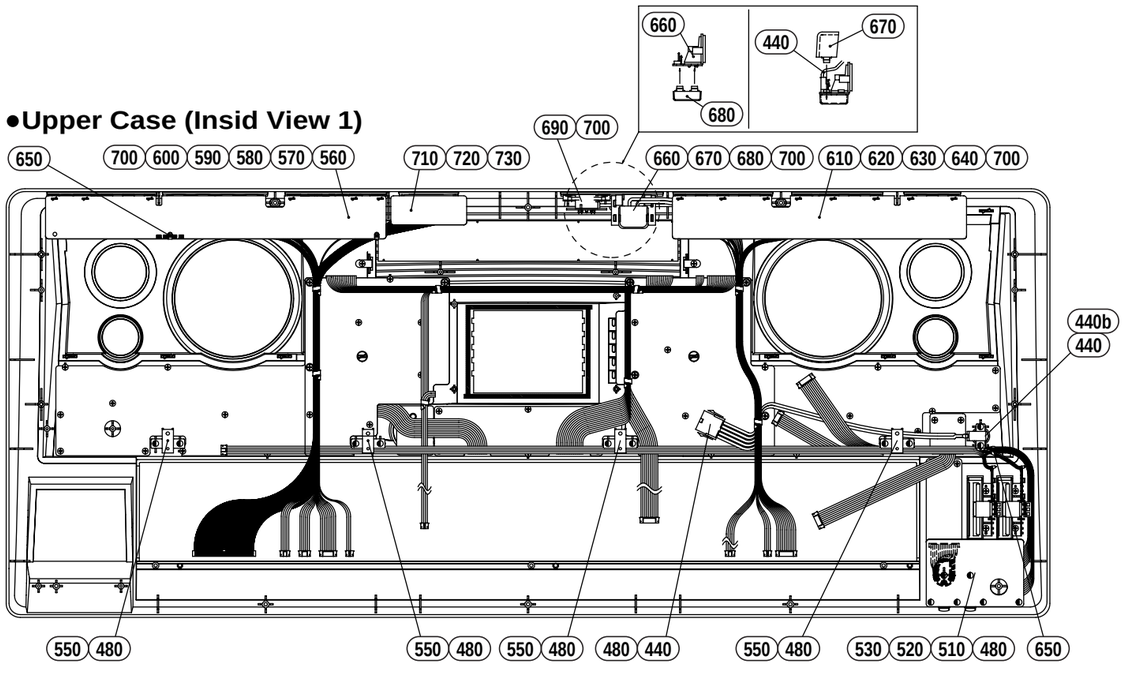

●Upper Case (Insid View 3)

Fig. B

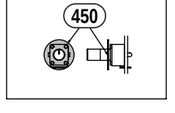

	REF NO.	PART NO.	DESCRIPTION		部品名	REMARKS	QTY	RANK
			UPPER CASE ASSEMBLY		上ケースＡＳＳ’Ｙ	PSR-9000		
		--	Upper Case Assembly	E	上ケースＡｓｓ’ｙ	E,B (V364810)		
		--	Upper Case Assembly	U	上ケースＡｓｓ’ｙ	U (V364830)		
		--	Upper Case Assembly	N	上ケースＡｓｓ’ｙ	N (V364820)		
*	10	V3871700	Upper Case Sub-assembly		上ケースサブＡｓｓ’ｙ			
*	10a	V3957900	Speaker Grille	LEFT	ＳＰグリルＬ塗装品			08
*	10b	V3958000	Speaker Grille	RIGHT	ＳＰグリルＲ塗装品			08
*	20	V3878700	Key Top Rubber	A	キートップ Ａ	SONG(I-V,SONG SETUP), STYLE(8BEAT,...,COUNTRY)	6	
*	30	V3878800	Key Top Rubber	B	キートップ Ｂ	SONG PLAYER,AUTO ACCOMP.	2	
*	40	V3878900	Key Top Rubber	C	キートップ Ｃ	STYLE(LATIN,..DISKDIRECT) VOICE(PIANO,...,CUSTOM V.)	7	
*	50	V3879000	Key Top Rubber	D 1	キートップ Ｄ１	ACCOMP. CONTROL (INTRO,TAP TEMPO)		
*	60	V3879100	Key Top Rubber	D 2	キートップ Ｄ２	ACCOMP. CONTROL (MAIN VARIATION)		
*	70	V3879200	Key Top Rubber	D 3	キートップ Ｄ３	ACCOMP. CONTROL (ENDING,FADE IN/OUT)		
*	80	V3879300	Key Top Rubber	D 4	キートップ Ｄ４	ACCOMP. CONTROL (FILL IN & BREAK)		
*	90	V3879400	Key Top Rubber	E	キートップ Ｅ	MENU(DISK/SCSI,..,MIDI)		
*	100	V3879500	Key Top Rubber	F	キートップ Ｆ	KEYBOARD,TRANSPOSE	2	
*	110	V3879600	Key Top Rubber	G	キートップ Ｇ	ACCOMP. CONTROL (SYNC STOP,SYNC START)		
*	120	V3879700	Key Top Rubber	H	キートップ Ｈ	ACCOMP. CONTROL (START/STOP)		
*	130	V3879800	Key Top Rubber	I 1	キートップ Ｉ１	DIGITAL STUDIO		
*	140	V3879900	Key Top Rubber	I 2	キートップ Ｉ２	VOICE EFFECT	2	
*	150	V3880000	Key Top Rubber	J	キートップ Ｊ	MULTIPAD		
*	160	V3880100	Key Top Rubber	K 1	キートップ Ｋ１	MULTIPAD(1,2)		
*	170	V3880200	Key Top Rubber	K 2	キートップ Ｋ２	MULTIPAD(3,4)		
*	180	V3880300	Key Top Rubber	L	キートップ Ｌ	DIRECT ACCESS,EXIT	2	
*	190	V3880400	Key Top Rubber	M	キートップ Ｍ	LCD Selects(L/R)	10	
*	200	V3880500	Key Top Rubber	N	キートップ Ｎ	LCD Selects(1-8)		
*	210	V3880600	Key Top Rubber	O	キートップ Ｏ	DEMO		
*	220	V3880700	Key Top Rubber	P	キートップ Ｐ	PAGE CONTROL(BACK,NEXT)		
*	230	V3880800	Key Top Rubber	Q	キートップ Ｑ	MUSIC DATABASE		
*	240	V3880900	Key Top Rubber	R 1	キートップ Ｒ１	ONE TOUCH SETTING(1,2)		
*	250	V3881000	Key Top Rubber	R 2	キートップ Ｒ２	ONE TOUCH SETTING(3,4)		
*	260	V3881100	Key Top Rubber	S	キートップ Ｓ	REGIST. MEMORY(FREEZE, REGISTBANK1-64/BANK VIEW)		
*	270	V3881200	Key Top Rubber	T 1	キートップ Ｔ１	REGIST. MEMORY(1-4)		
*	280	V3881300	Key Top Rubber	T 2	キートップ Ｔ２	REGIST. MEMORY(5-8)		
*	290	V3881400	Key Top Rubber	U	キートップ Ｕ	PART SELECT		
*	300	V3881500	Key Top Rubber	V	キートップ Ｖ	PART ON/OFF		
*	310	V3881600	Key Top Rubber	W	キートップ Ｗ	MEMORY		
*	320	V3881700	Key Top Rubber	X	キートップ Ｘ	VOCAL HARMONY(TALK-V.H.)		
*	330	V3881800	Key Top Rubber	Y	キートップ Ｙ	VOLAL HARMONY(SELECT, MIC SETUP), DISK IN USE		
*	340	V4197500	Circuit Board	PN1	ＰＮ１シート			
	350	--	Connector Assembly	PN1 L=640	ＰＮ１束線	(V415090)		
	360	--	Connector Assembly	PN3-FC	ＰＮ３束線－ＦＣ	(V523140)		
*	390	V4197200	Circuit Board	PN2	ＰＮ２シート			
	400	--	Connector Assembly	PN3-2	ＰＮ３束線２	(V415130)		
*	410	V4197100	Circuit Board	PN3	ＰＮ３シート			
	420	--	Connector Assembly	LCDC	ＬＣＤＣ束線	(V415170)		
*	430	V4197300	Circuit Board	EN	ＥＮシート			
	440	--	Connector Assembly	POW1 A L=470	ＰＯＷ１束線Ａ	E,B,U (V417580)		
	440	--	Connector Assembly	POW1 B	ＰＯＷ１束線Ｂ	N (V417590)		
	440a	--	Plug	5559 4P	プラグ	E,B,U (VM41710)		
	440a	--	Plug	5559 10P	プラグ	N (V426840)		
⚠	440b	VC843500	Push Switch	SDDLB1216A J.U.C.S	プッシュＳＷ	POWER ON/OFF		03
	440c	CB049980	Switch Cover	BL	パワースイッチカバー			01
	450	V2320400	VR Crosse		ボリュームクロス			03
*	460	V4197800	Circuit Board	MV	ＭＶシート			
	470	--	Connector Assembly	VR	ＶＲ束線	(V414640)		
	480	EP600250	Bind Head Tapping Screw-B	3.0X8 MFZN2Y	+バインドＢタイト	E,B,U	73	01
	480	EP600250	Bind Head Tapping Screw-B	3.0X8 MFZN2Y	+バインドＢタイト	N	74	01
	490	CB040540	Cord Binder	S-72B L=50	束線止め	U,B,N	9	01
	490	CB040540	Cord Binder	S-72B L=50	束線止め	E	8	01

*: New parts

RANK: Japan only

	REF NO.	PART NO.	DESCRIPTION		部品名	REMARKS	QTY	RANK
*	500	V4197700	Corcuit Board	MIC/VR	ＭＩＣ／ＶＲシート			
*	510	V4197600	Circuit Board	MIC/HP	ＭＩＣ／ＨＰシート			
	520	--	Connector Assembly	HP L=460	ＨＰ束線	(V415190)		
	530	--	Connector Assembly	MIC-B	ＭＩＣ束線	(V526710)		
	540	--	Wheel Assembly		ホイールＡｓｓ’ｙ	(V387620)		
	550	--	Holder, MK		ＭＫ固定金具	(V387520)	4	
*	560	V4270600	Circuit Board	DJACK	ＤＪＡＣＫシート			
	570	--	Connector Assembly	DJACK 1	ＤＪＡＣＫ束線－ＦＣ	(V523130)		
	600	--	Connector Assembly	VIDEO	ＶＩＤＥＯ束線	(V415400)		
*	610	V4582000	Circuit Board	AJACK	ＡＪＡＣＫシート			
	620	--	Connector Assembly	AJACK 1	ＡＪＡＣＫ束線１	(V414600)		
	630	--	Connector Assembly	AJACK 2	ＡＪＡＣＫ束線２	(V414690)		
	640	--	Connector Assembly	AJACK 3 L=840	ＡＪＡＣＫ束線３	(V415370)		
	650	CB069250	Cord Holder	BK-1	インシュロックタイ		3	01
	660	VT388200	Circuit Board	INLET	インレットシート ＣＥ	E,B,N		08
	660	VT388100	Circuit Board	INLET	インレットシート ＵＣ	U		08
	670	--	Cover		ＵＬ保護カバー	(VU08700)		
	680	--	Cover		ＵＬ保護カバー	(VU08710)		
	690	--	Plate		目隠し板	E,B,U (V389160)		
*	690	V4272300	Circuit Board	VSEL	ＶＳＥＬシート	N		
	700	EP600140	Bind Head Tapping Screw-B	3.0X10 MFZN2BL	+バインドＢタイト		22	01
*	710	V4271500	Circuit Board	SCSI	ＳＣＳＩシート			
	720	--	Connector Assembly	SCSI	ＳＣＳＩ束線	(V414950)		
*	730	VS206600	Pan Head Screw	2.5X6 MFZN2BL	+ナベ小ネジ		2	
	740	VS386300	Cushion		防塵スポンジ		2	03
	750	CB825380	Push Button		プッシュボタン	POWER ON/OFF		03
	760	VQ218900	Knob		Ｖ－ツマミ	MASTER VOLUME		03
	770	V2300100	VR Knob		ＶＲノブ	INPUT VOLUME		04
	780	--	Insulation sheet L		絶縁シートＬ	(V448380)		
	790	--	Insulation sheet R		絶縁シートＲ	(V448400)		
*	800	V4561900	Encoder Knob		エンコーダツマミ	DATA Dial		05
	820	--	GND Wire 3		アース線３	(V522940)		
	830	--	GND Wire 9		アース線９	(V523000)		
	840	--	GND Wire 10		アース線１０	(V523010)		
	850	VA126100	Adhesive Tape	12X50	粘着テープ			03
	860	--	Vibration-proof Tape F		防振テープＦ	(V202660)	4	

*: New parts

RANK: Japan only

■KEYBOARD ASSEMBLY

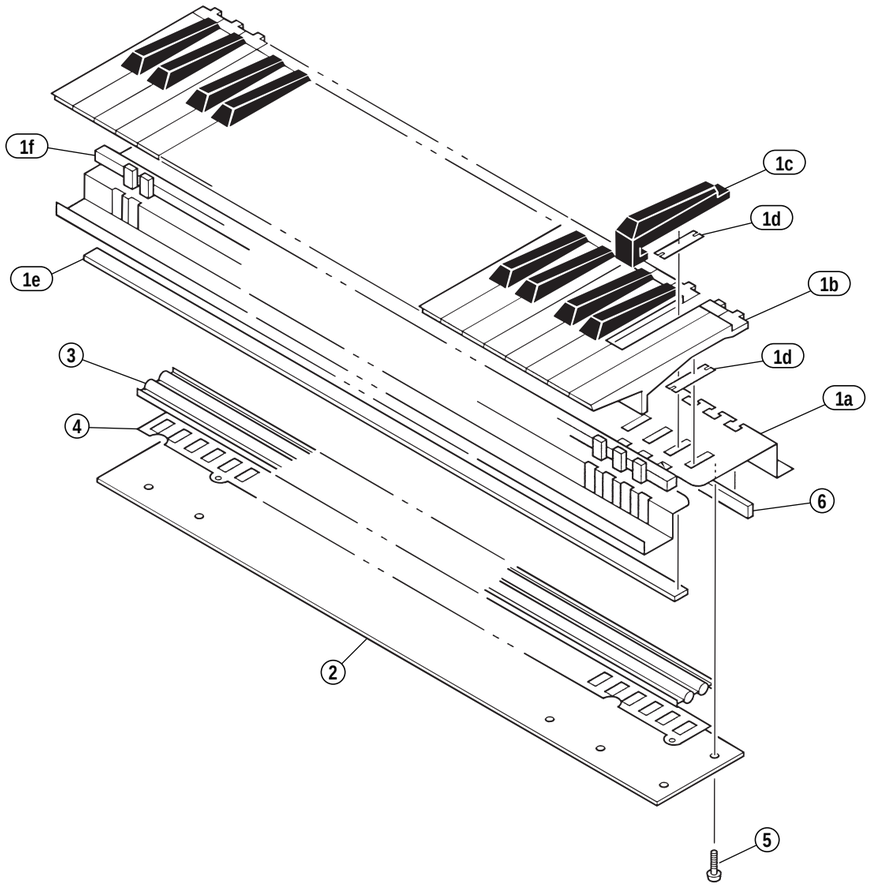

REF NO.	PART NO.	DESCRIPTION		部品名	REMARKS	QTY	RANK
		KEYBOARD ASSEMBLY		ＬＣ鍵盤ＡＳＳ’Ｙ	PSR-9000		
	VN399200	Keyboard Assembly	C61K6	ＬＣ鍵盤Ａｓｓ’ｙ			29
1	**--**	MK Frame Assembly	LC C61	ＭＫフレームＡｓｓ’ｙ	(VN40550)		
1a	**--**	MK Frame	LC	ＭＫフレーム	(VM63000)		
1b	**VL570000**	White Key	C,F	白鍵		10	03
1b	**VL570100**	White Key	D	白鍵		5	03
1b	**VL570200**	White Key	B,E	白鍵		10	03
1b	**VL570300**	White Key	G	白鍵		5	03
1b	**VL570400**	White Key	A	白鍵		5	03
1b	**VL570500**	White Key	C'	白鍵			03
1c	**VL570600**	Black Key		黒鍵		25	03
1d	**VC077600**	Spring		バネ		61	01
1e	**VR857100**	Felt	820X6X3.6 WH	フェルトシロ			03
1f	**VN406100**	PC Sensor	MK-LC61TO-N	ＰＣセンサー			10
2	**VI912000**	Circuit Board	LC	ＭＫシート			14
3	**VF834100**	Rubber Contact	LC	可動導電ゴム			09
4	**VM630100**	Insulation Spacer	LC	絶縁スペーサー			06
5	**EP630630**	Bind Head Tapping Screw-S	3.0X10 MFZN2Y	+バインドＳタイト		16	01
6	**VC079800**	Stopper	LC	ストッパー			02

*: New parts

RANK: Japan only

■LCD ASSEMBLY

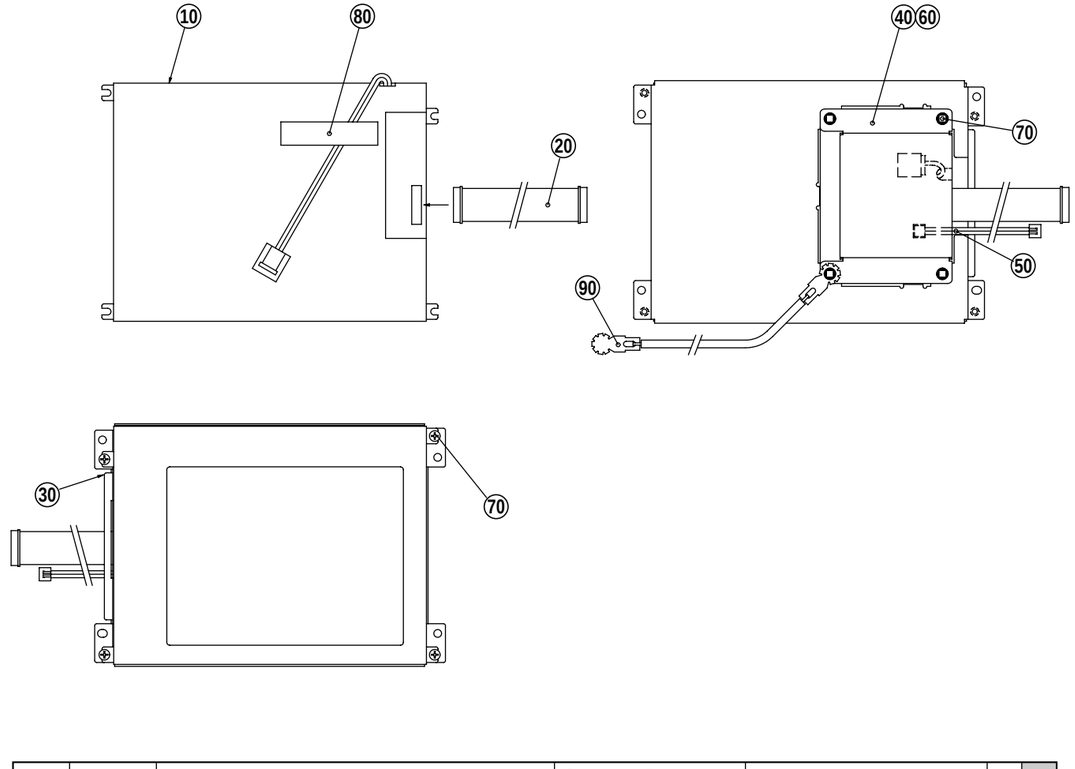

REF NO.	PART NO.	DESCRIPTION		部品名	REMARKS	QTY	RANK
		LCD ASSEMBLY		ＬＣＤ ＡＳＳ’Ｙ	PSR-9000		
	--	LCD Assembly		ＬＣＤ Ａｓｓ’ｙ	(V387800)		
* 10	**V3331300**	LCD	EDMMPU3BCF	液晶ディスプレイ			23
20	**--**	Connector Assembly	LCD	ＬＣＤ束線	(V415080)		
30	**--**	Holder, LCD		ＬＣＤ固定金具	(V387420)		
40	**VY638900**	Circuit Board	INV	ＩＮＶシート			13
50	**--**	Connector Assembly	INV L=470	ＩＮＶ束線	(V414880)		
60	**VZ664400**	Cover	INVERTER	ＩＮＶカバー			05
70	**EP600230**	Bind Head Tapping Screw-B	3.0X6 MFZN2BL	+バインドＢタイト		8	01
80	**VA126100**	Adhesive Tape	12X50	粘着テープ			03
90	**--**	GND Wire 11		アース線１１	(V523020)		

*: New parts

RANK: Japan only

■FDD ASSEMBLY

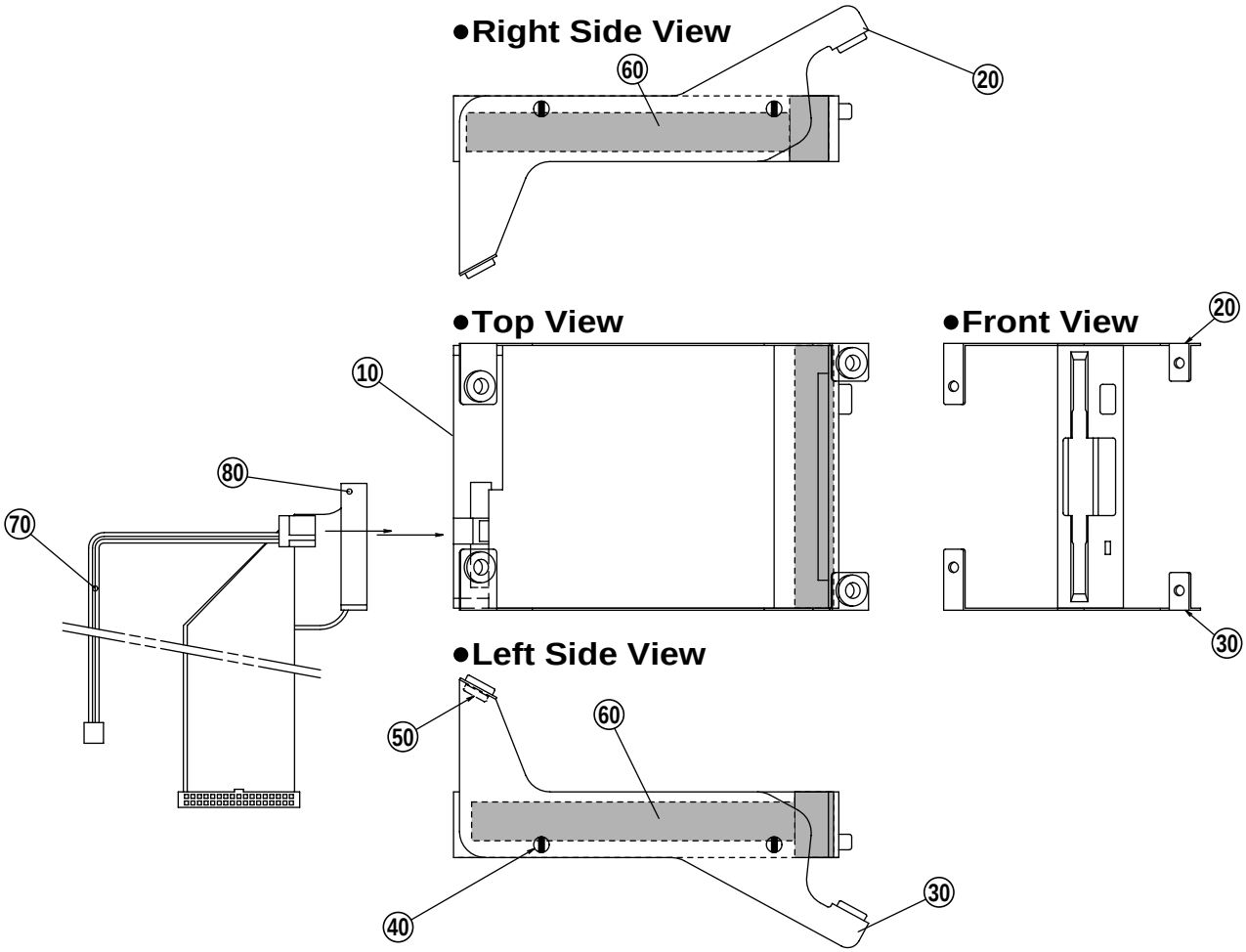

	REF NO.	PART NO.	DESCRIPTION		部品名	REMARKS	QTY	RANK
			FLOPPY DISK DRIVE ASSEMBLY		FDD ASS'Y	PSR-9000		
		--	Floppy Disk Drive Assembly		FDD Ass'y	(V364880)		
	10	V3075300	Floppy Disk Drive	MF355F-3252MG F	3.5"FDD			16
	20	--	Holder, FDD	RIGHT	FDD固定金具 R	(V387660)		
	30	--	Holder, FDD	LEFT	FDD固定金具 L	(V387670)		
	40	VK712400	Bonding Head Screw	3.0X6 MFNI33	ボンデイングコネジ		4	01
	50	VA121600	Bushing		ゴムブッシュ		4	01
	60	--	Adhesive Tape	ECT #590S W=15	綿粘着テープ	(ZL35000)		
*	70	V4148600	Connector Assembly	FDD POWER	FDD電源束線			
*	80	V4148900	Connector Assembly	FDD	FDD束線			05

*: New parts

RANK: Japan only

■POWER SUPPLY UNIT

●Power Supply Unit Assembly

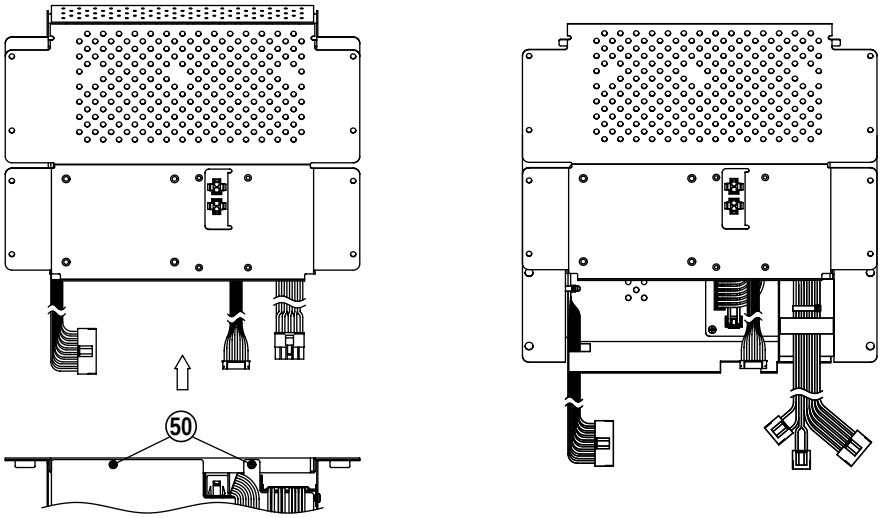

●Bottom Open View

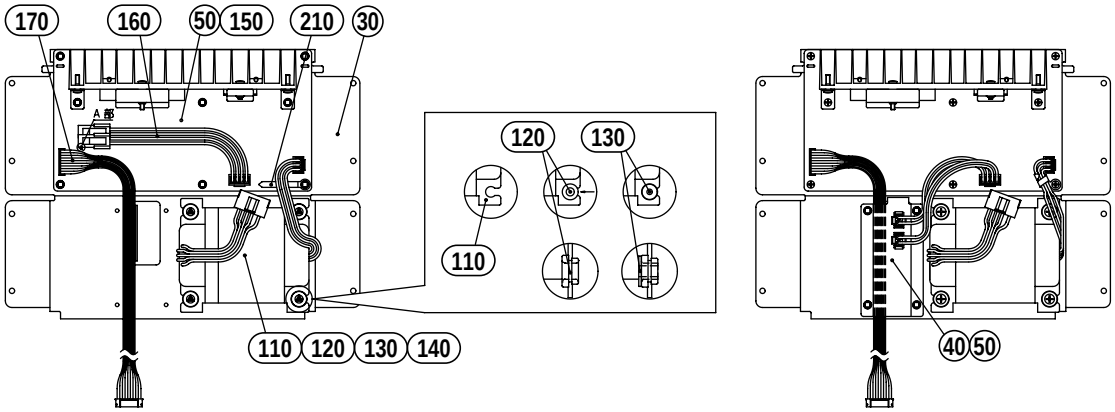

●Top Open View

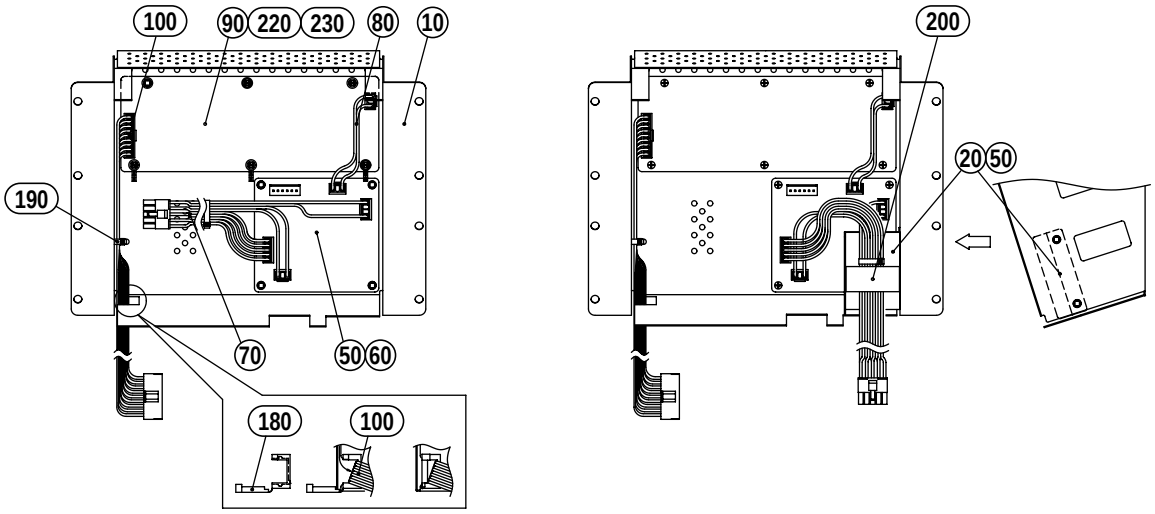

	REF NO.	PART NO.	DESCRIPTION		部品名	REMARKS		QTY	RANK
			POWER SUPPLY UNIT		電源ユニット	PSR-9000			
		--	Power Supply Unit	E	電源ユニット	E,B	(V393840)		
		--	Power Supply Unit	U	電源ユニット	U	(V393850)		
		--	Power Supply Unit	N	電源ユニット	N	(V393860)		
	10	--	Power Supply Cocer	UPPER	電源カバー U		(V387600)		
	20	--	Rail B		束線レール B		(V388240)		
	30	--	Power Supply Cover	LOWER	電源カバー L		(V387610)		
	40	--	Rail A		束線レール A		(V388230)		
	50	**EP600130**	Bind Head Tapping Screw-B	3.0X6 MFZN2Y	+バインドBタイト			20	01
*	60	**V4272800**	Circuit Board	FU E GBR	FUシート	E,B			
*	60	**V4272700**	Circuit Board	FU U CSA	FUシート	U			
*	60	**V4272900**	Circuit Board	FU N	FUシート	N			
	70	--	Connector Assembly	POW2 A	POW2束線A	E,B,U	(V417600)		
	70	--	Connector Assembly	POW2 B	POW2束線B	N	(V417610)		
	80	--	Connector Assembly	SWP	SWP束線		(V414480)		
*	90	**V3676700**	Power Supply Unit	CE,U,CS	電源ユニット				19
	100	--	Connector Assembly	POWER 1	電源束線1		(V414490)		
⚠*	110	**XW052A00**	Power Transformer	E ICE65 E	電源トランス	E,B			11
⚠*	110	**XW051A00**	Power Transformer	UL/CSA A	電源トランス	U			11
⚠*	110	**XW053B00**	Power Transformer	N ICE65 E	電源トランス	N			11
	120	**VA121600**	Bushing		ゴムブッシュ			4	01
	130	**VA121400**	Spacer		スペーサー			4	02
	140	**EP600750**	Bind Head Tapping Screw-B	4.0X14 MFZN2Y	+バインドBタイト			4	01
*	150	**V3727900**	Circuit Board	AMP E GBR,N	AMPシート	E,B,N			
*	150	**V3727800**	Circuit Board	AMP U CSA	AMPシート	U			
	160	--	Connector Assembly	SP RELAY	SP中継束線		(V414510)		
	170	--	Connector Assembly	SIG	SIG束線FC		(V524670)		
	180	--	Saddle	EDS-17L	エッジサドル		(V445200)		
	190	**CB069250**	Cord Holder	BK-1	インシュロックタイ				01
	200	**VF298800**	Adhesive Tape	19X70	粘着テープ				01
	210	**CB040540**	Cord Binder	S-72B L=50	束線止め				01
	220	**V3766800**	INV Bush		INVブッシュ			6	
*	230	**VD017400**	Braizer W.H.Tap. Screw	3.0 X 6 MFZN2Y	+PWHBタイト			6	

*: New parts

RANK: Japan only

■WHEEL ASSEMBLY

●Modulation Wheel

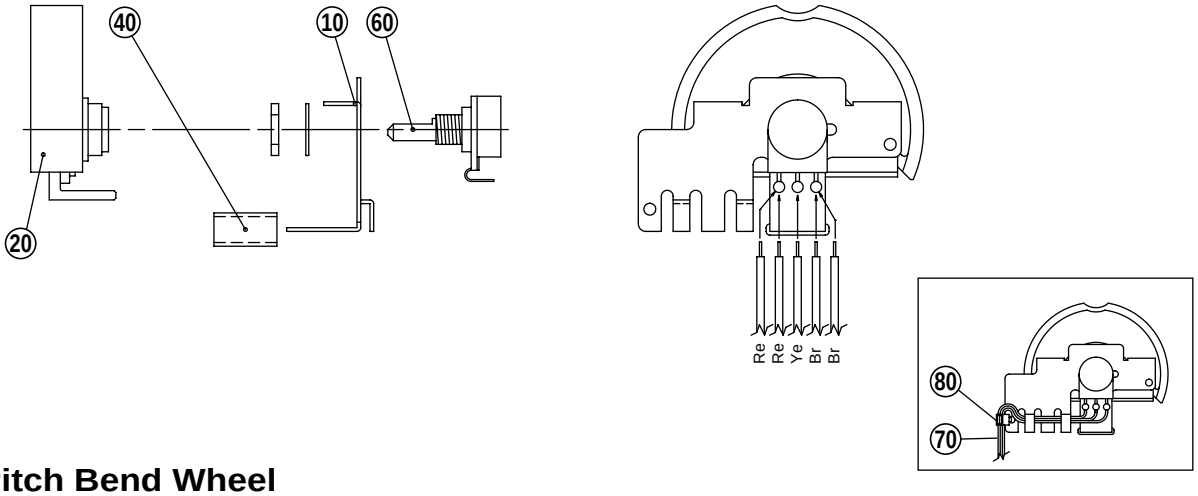

●Pitch Bend Wheel

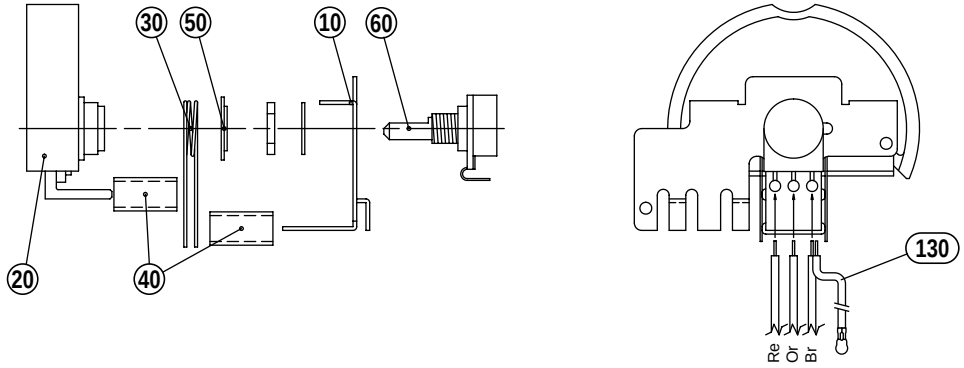

REF NO.	PART NO.	DESCRIPTION		部品名	REMARKS	QTY	RANK
		WHEEL ASSEMBLY		ホイールASS'Y	PSR-9000		
	--	Wheel Assembly		ホイールAss'y	(V387620)		
10	--	Frame		フレーム	(V453380)	2	
20	**VF537400**	Wheel		ホイール	PITCH/MODULATION	2	03
30	**VC792800**	Spring		リターンSP			01
40	**CB819020**	Wheel Tube		ホイールチューブ		3	04
50	**EW600110**	Stop Ring	12	CS形止め輪			01
60	**VT695100**	Rotary Variable Resistor	10.0K RK163111	ロータリーVR	PITCH/MODULATION	2	03
70	--	Connector Assembly	WL L=1070	WL束線	(V414540)		
80	**CB069250**	Cord Holder	BK-1	インシュロックタイ		2	01
130	--	GND Wire 7		アース線7	(V522980)		

*: New parts

RANK: Japan only

■ELECTRICAL PARTS

	REF NO.	PART NO.	DESCRIPTION		部品名	REMARKS	QTY	RANK
			ELECTRICAL PARTS		電気部品	PSR-9000		
*		V3558900	Circuit Board	AM	AMシート	(XV931C0)		
*		V3727900	Circuit Board	AMP E GBR,N	AMPシート	E,B,N (XV922B0)		
*		V3727800	Circuit Board	AMP U CSA	AMPシート	U (XV922B0)		
*		V4101100	Circuit Board	DM	DMシート	(XW155C0)		
*		V4101200	Circuit Board	DP	DPシート	(XW156C0)		
*		V4197300	Circuit Board	EN	ENシート	(XW443B0)		
*		V4197500	Circuit Board	PN1	PN1シート	(XW443B0)		
*		V4197200	Circuit Board	PN2	PN2シート	(XW443B0)		
*		V4272800	Circuit Board	FU E GBR	FUシート	E,B (XV921B0)		
*		V4272700	Circuit Board	FU U CSA	FUシート	U (XV921B0)		
*		V4272900	Circuit Board	FU N	FUシート	N (XV921B0)		
		VT388200	Circuit Board	INLET	インレットシート CE	E,B,N (XQ666B0)		08
		VT388100	Circuit Board	INLET	インレットシート UC	U (XQ666B0)		08
		VY638900	Circuit Board	INV	INVシート	(XT122A0)		13
*		V4270600	Circuit Board	DJACK	DJACKシート	(XV936B0)		
*		V4582000	Circuit Board	AJACK	AJACKシート	(XV936B0)		
		VI912000	Circuit Board	LC	MKシート	(XH07890)		14
*		V4197800	Circuit Board	MV	MVシート	(XW438B0)		
*		V4197700	Circuit Board	MIC/VR	MIC／VRシート	(VW438B0)		
*		V4197600	Circuit Board	MIC/HP	MIC／HPシート	(XW438B0)		
*		V4197100	Circuit Board	PN3	PN3シート	(XW438B0)		
*		V4272100	Circuit Board	NET	NETシート	(XW374B0)		
*		V4271500	Circuit Board	SCSI	SCSIシート	(XW083C0)		
*		V4101300	Circuit Board	TG	TGシート	(XW157E0)		
*		V4272300	Circuit Board	VSEL	VSELシート	N (XW375B0)		
*		V3558900	Circuit Board	AM	AMシート	(XV931C0)		
		VD041700	Jumper Wire	0.55	ジャンパー線			
	CN1	VB390600	Connector Base Post	PH-10P TE	コネクタベースポスト			01
	CN2	LB918040	Base Post Connector	XH 4P TE	ベースツキポスト			01
	CN3	VB390400	Connector Base Post	PH- 8P TE	コネクタベースポスト			01
	CN4	VB390500	Connector Base Post	PH- 9P TE	コネクタベースポスト			03
	CN5	VB390300	Connector Base Post	PH- 7P TE	コネクタベースポスト			01
	CN6	VE352600	Connector Base Post	PH-14P TE	コネクタベースポスト			01
	CN7	VB390000	Connector Base Post	PH- 4P TE	コネクタベースポスト			01
	D1	VB941200	Diode	1SS133,1SS176	ダイオード			01
	-7	VB941200	Diode	1SS133,1SS176	ダイオード			01
	FT1	IE101250	FET	2SK105 E,F	FET			01
	FT2	IE101250	FET	2SK105 E,F	FET			01
	IC1	XB247A00	IC	UPC4570HA	IC	OP AMP		02
	-3	XB247A00	IC	UPC4570HA	IC	OP AMP		02
	IC4	XM804A00	IC	LA6517	IC	OP AMP		04
	IC5	XB247A00	IC	UPC4570HA	IC	OP AMP		02
	-7	XB247A00	IC	UPC4570HA	IC	OP AMP		02
*	RY1	VZ057500	Relay	DC MR82-12USR	リレー 12V			04
	TR1	IC174020	Transistor	2SC1740S R,S	トランジスタ			01
	-3	IC174020	Transistor	2SC1740S R,S	トランジスタ			01
	TR4	IA093320	Transistor	2SA933S Q,R	トランジスタ			01
	TR5	IC174020	Transistor	2SC1740S R,S	トランジスタ			01
	TR6	IC174020	Transistor	2SC1740S R,S	トランジスタ			01
	TR7	IC332720	Transistor	2SC3327 A,B	トランジスタ			01
	-12	IC332720	Transistor	2SC3327 A,B	トランジスタ			01
	TR13	IC174020	Transistor	2SC1740S R,S	トランジスタ			01
		FG613220	Ceramic Capacitor-B	2200P 50V K	セラコン（B）	C:26,27		01
		FG644100	Ceramic Capacitor-F	0.01 50V Z	セラコン（F）	C:65		01
		FG651220	Ceramic Capacitor-SL	22P 50V J	セラコン（SL）	C:55,57		01
		FG651270	Ceramic Capacitor-SL	27P 50V J	セラコン（SL）	C:16,18		01
		FG651330	Ceramic Capacitor-SL	33P 50V J	セラコン（SL）	C:47,49,51,53		01
		FG651470	Ceramic Capacitor-SL	47P 50V J	セラコン（SL）	C:4,6,70,71		01
		FG652100	Ceramic Capacitor-SL	100P 50V J	セラコン（SL）	C:30,32		01
		UA355100	Mylar Capacitor	0.1 50V J	マイラーコン	C:44,45		01
		UN866470	Electrolytic Cap.-BP	4.7 50.0V	BPケミコン	C:17,19,29,31,35,36,48,50,56,58		01
		UN847100	Electrolytic Cap.-BP	10.00 25.0V	BPケミコン	C:52,54		01
		UN847470	Electrolytic Cap.-BP	47.00 25.0V	BPケミコン	C:21,22		01
		UN848100	Electrolytic Cap.-BP	100.00 25.0V	BPケミコン	C:42,46		01
		UN865470	Electrolytic Cap.-BP	0.47 50.0V	BPケミコン	C:66,69		01
		UR847470	Electrolytic Cap.	47.00 25.0V	ケミコン	C:11		01
		UR848100	Electrolytic Cap.	100.00 25.0V	ケミコン	C:2		01
		UR848220	Electrolytic Cap.	220.00 25.0V	ケミコン	C:25		01

*: New parts

RANK: Japan only

	REF NO.	PART NO.	DESCRIPTION		部品名	REMARKS	QTY	RANK
		UR848470	Electrolytic Cap.	470.00 25.0V	ケミコン			01
		UR865330	Electrolytic Cap.	0.33 50.0V	ケミコン	C:24		
		UR866470	Electrolytic Cap.	4.7 50.0V	ケミコン	C:33,34		01
		VC694800	Semiconductive Cera. Cap.	0.1 25V Z	半導体セラコン	C:3,8,15,20,23,28,39,41,43,59-64,		01
						67,68		01
		VD930900	Semiconductive Cera. Cap.	0.1 25V M	半導体セラコン	C:40		01
		HF754330	Carbon Resistor	33.0 1/4 J	カーボン抵抗	R:43,44		01
		HF755100	Carbon Resistor	100.0 1/4 J	カーボン抵抗	R:26,58,86,87		01
		HF755150	Carbon Resistor	150.0 1/4 J	カーボン抵抗	R:27		01
		HF755470	Carbon Resistor	470.0 1/4 J	カーボン抵抗	R:29,30		01
		HF755680	Carbon Resistor	680.0 1/4 J	カーボン抵抗	R:61,63,68,71,74,77		01
		HF756100	Carbon Resistor	1.0K 1/4 J	カーボン抵抗	R:22,64,66,69,72,75,78,81		01
		HF756470	Carbon Resistor	4.7K 1/4 J	カーボン抵抗	R:16,17,60		01
		HF757100	Carbon Resistor	10.0K 1/4 J	カーボン抵抗	R:1,4,8,12,18,21,23,24,28,33,35,		01
						39-42,45,46,53-57,59,62,65,67,		
						70,73,76,79,82,84		
		HF757180	Carbon Resistor	18.0K 1/4 J	カーボン抵抗	R:83,85		01
		HF757220	Carbon Resistor	22.0K 1/4 J	カーボン抵抗	R:34,36		01
		HF757270	Carbon Resistor	27.0K 1/4 J	カーボン抵抗	R:37,38		01
		HF757330	Carbon Resistor	33.0K 1/4 J	カーボン抵抗	R:47-50,80		01
		HF757470	Carbon Resistor	47.0K 1/4 J	カーボン抵抗	R:2,3		01
		HF757560	Carbon Resistor	56.0K 1/4 J	カーボン抵抗	R:51,52		01
		HF757820	Carbon Resistor	82.0K 1/4 J	カーボン抵抗	R:13,15,19,20		01
		HF758100	Carbon Resistor	100.0K 1/4 J	カーボン抵抗	R:9,14,25,31,88		01
		HF758560	Carbon Resistor	560.0K 1/4 J	カーボン抵抗	R:7,11		01
*		**V3727900**	Circuit Board	AMP E GBR,N	AMPシート	E,B,N (XV922B0)		
*		**V3727800**	Circuit Board	AMP U CSA	AMPシート	U (XV922B0)		
		VE683000	Bind Head Tapping Screw-B	3.0X12 MFZN2Y	+バインドBタイト			01
*		**VI064600**	Bind Head Tapping Screw-B	3.0X20 MFZN2Y	+バインドBタイト			01
		LB201530	Fuse Holder	PC-PH1	ヒューズホルダ			01
		--	Regulator Holder A		レギュレータ固定金具A	(V387630)		
		--	Regulator Holder B		レギュレータ固定金具B	(V387640)		
		--	Holder, Heat Sink		放熱板固定金具	(V387650)		
		--	Heat Sink	30BS172H-L80	放熱板	(V444550)		
		VJ834500	Insulation Sheet		放熱シート（パワー）			03
		VD041700	Jumper Wire	0.55	ジャンパー線			
	CN1	**VB390500**	Connector Base Post	PH- 9P TE	コネクタベースポスト			03
	CN2	**LB932030**	Base Post Connector	VH- 3P TE	ベースポスト			01
	CN3	**LB932040**	Base Post Connector	VH- 4P TE	ベースポスト			01
	D1	**VB481900**	Diode	11ES4	ダイオード			01
⚠	DB1	**VQ111500**	Diode Stack	D3SBA20-4103 4.0A	ダイオードスタック			03
⚠	F1	**KB003240**	Fuse	5.00A S	ヒューズ	E,B,N		01
⚠	F1	**KB003630**	Fuse	5.00A JU	ヒューズ	U		01
⚠	F2	**KB003240**	Fuse	5.00A S	ヒューズ	E,B,N		01
⚠	F2	**KB003630**	Fuse	5.00A JU	ヒューズ	U		01
	IC1	**XL972A00**	IC	STK401-040	IC	POWER AMPLIFIER		08
	IC2	**XF751A00**	IC	M5227P	IC	EQUALIZER		04
	IC3	**XF751A00**	IC	M5227P	IC	EQUALIZER		04
	R2	**VD041700**	Jumper Wire	0.55	ジャンパー線			
	R4	**VD041700**	Jumper Wire	0.55	ジャンパー線			
	R7	**VD041700**	Jumper Wire	0.55	ジャンパー線			
	R9	**VD041700**	Jumper Wire	0.55	ジャンパー線			
	R11	**VD041700**	Jumper Wire	0.55	ジャンパー線			
	R16	**VD041700**	Jumper Wire	0.55	ジャンパー線			
	RY1	**VK881200**	Relay	DC G5Z-2A-YA	リレー12V			04
	TR1	**IC1815M0**	Transistor	2SC1815 Y,GR	トランジスタ			01
	-3	**IC1815M0**	Transistor	2SC1815 Y,GR	トランジスタ			01
		FG612560	Ceramic Capacitor-B	560P 50V K	セラコン（B）	C:24,34		01
		FG613100	Ceramic Capacitor-B	1000P 50V K	セラコン（B）	C:26,36		01
		UA353100	Mylar Capacitor	1000P 50V J	マイラーコン	C:05,10		01
		UA353220	Mylar Capacitor	2200P 50V J	マイラーコン	C:04,09		01
		UA354100	Mylar Capacitor	0.01 50V J	マイラーコン	C:15,20		01
		UA354270	Mylar Capacitor	0.027 50V J	マイラーコン	C:03,08		01
		UA354330	Mylar Capacitor	0.033 50V J	マイラーコン	C:14,19		01
		UA354470	Mylar Capacitor	0.047 50V J	マイラーコン	C:02,07		
		UN866470	Electrolytic Cap.-BP	4.7 50.0V	BPケミコン	C:21,25,31,35		01
		UR838100	Electrolytic Cap.	100.00 16.0V	ケミコン	C:27,37,60,61		01
		UR838220	Electrolytic Cap.	220.00 16.0V	ケミコン	C:43		01
		VA302600	Ceramic Capacitor-E	0.01 500V P	セラコン（E）	C:50		01

*: New parts

RANK: Japan only

	REF NO.	PART NO.	DESCRIPTION		部品名	REMARKS	QTY	RANK
		VC694800	Semiconductive Cera. Cap.	0.1 25V Z	半導体セラコン	C:22,23,28,29,32,33,38,39		01
		VL232200	Electrolytic Cap.	3300 50.0V	ケミコン	C:51-54		04
		VE326300	Monolitic Mylar Capacitor	0.18 50V J	積層マイラーコン	C:01,06		01
		VR168600	Monolitic Mylar Capacitor	ECQ-V1H184JL3	積層マイラーコン			01
		VE327100	Monolitic Mylar Capacitor	0.82 50V J	積層マイラーコン	C:11,16		02
		VR169500	Monolitic Mylar Capacitor	ECQ-V1H824JL3	積層マイラーコン			01
		VE326600	Monolitic Mylar Capacitor	0.33 50V J	積層マイラーコン	C:12,17		01
		VR169000	Monolitic Mylar Capacitor	ECQ-V1H334JL3	積層マイラーコン			01
		VE326200	Monolitic Mylar Capacitor	0.15 50V J	積層マイラーコン	C:13,18		
		VR168500	Monolitic Mylar Capacitor	ECQ-V1H154JL3	積層マイラーコン			01
		VE327000	Monolitic Mylar Capacitor	0.68 50V J	積層マイラーコン	C:15,20		01
		VR169400	Monolitic Mylar Capacitor	ECQ-V1H684JL3	積層マイラーコン			
		HF455560	Carbon Resistor	560.0 1/4 J	カーボン抵抗	R:23,26,33,36		01
		HF456100	Carbon Resistor	1.0K 1/4 J	カーボン抵抗	R:11,16		01
		HF456120	Carbon Resistor	1.2K 1/4 J	カーボン抵抗	R:03,07,08		01
		HF456330	Carbon Resistor	3.3K 1/4 J	カーボン抵抗	R:22,32,43,44		01
		HF456390	Carbon Resistor	3.9K 1/4 J	カーボン抵抗	R:04,09		01
		HF456560	Carbon Resistor	5.6K 1/4 J	カーボン抵抗	R:21,31,41,42		01
		HF456680	Carbon Resistor	6.8K 1/4 J	カーボン抵抗	R:15,20		01
		HF457100	Carbon Resistor	10.0K 1/4 J	カーボン抵抗	R:24,25,34,35		01
		HF457150	Carbon Resistor	15.0K 1/4 J	カーボン抵抗	R:05,10		01
		HF457220	Carbon Resistor	22.0K 1/4 J	カーボン抵抗	R:01,06,12-14,17-19		01
⚠		**HW095100**	Fuse Resistor	100.0 1/4 J	ヒューズ抵抗	R:50,51		01
		VC742500	Metal Oxide Film Resistor	10.0 1W J	酸化金属被膜抵抗	R:27,37		01
*		**V4101100**	Circuit Board	DM	DMシート	(XW155C0)		
		VK863100	IC Socket	DICF-42CS-E	ICソケット			03
	CN1	**VB858400**	Connector Base Post	PH- 5P SE	コネクタベースポスト			01
	CN2	**VB858300**	Connector Base Post	PH- 4P SE	コネクタベースポスト			01
	CN3	**VE387000**	Base Post Connector	53014 3P TE	ベースポスト			03
	CN4	**VB858800**	Connector Base Post	PH- 9P SE	コネクタベースポスト			01
	CN5	**VB858700**	Connector Base Post	PH- 8P SE	コネクタベースポスト			01
*	CN6	**V3836300**	Connector	TX25-80P-LT-H1	基板用コネクタ			04
	CN7	**VL536600**	Connector Header	HIF3FC-50PA2.54DSA	コネクタヘッダー			03
*	CN8	**V3836100**	Connector	TX25-80P-12ST-H1	基板用コネクタ			04
	CN9	**VB389800**	Connector Assembly	PH 2P TE	コネクタベースポスト			01
	D1	**VB493900**	Diode	MA221	ダイオード			01
	D2	**VB493900**	Diode	MA221	ダイオード			01
	D3	**VE243700**	Diode	RB100A T-32	ダイオード			01
	D3	**VS406000**	Diode	RB100A	ショットキーダイオード			01
*	IC1	**XW795A00**	IC	HD6437043AE00F	IC	CPU		11
	IC2	**XV145A00**	IC	KM416C1200CJ-6	IC	DRAM 16M		12
	IC3	**XV145A00**	IC	KM416C1200CJ-6	IC	DRAM 16M		12
	IC4	**XM332A00**	IC	TC74VHC04F	IC	INVERTER		01
	IC5	**XT014A00**	IC	TC74VHC08F	IC	AND		01
*	IC6	**XW722C00**	IC	28F160S5	IC	MAIN PROGRAM LOW 16M		
*	IC7	**XW723C00**	IC	28F160S5	IC	MAIN PROGRAM HIGH 16M		
	IC8	**XP226A00**	IC	IC-PST591DMT	IC	RESET		03
	IC9	**XT487A00**	IC	TC74VHC245F	IC	TRANSCEIVER		03
	-12	**XT487A00**	IC	TC74VHC245F	IC	TRANSCEIVER		03
	IC13	**XT812A00**	IC	TC74VHC11F(EL)	IC	TRIPLE 3 INPUT AND		01
	IC14	**XT487A00**	IC	TC74VHC245F	IC	TRANSCEIVER		03
	-17	**XT487A00**	IC	TC74VHC245F	IC	TRANSCEIVER		03
	IC18	**XN964A00**	IC	TC74VHC74F	IC	D-FF		02
	IC19	**XR337A00**	IC	TC74VHC32F-TEL	IC	OR		01
	IC20	**XT475A00**	IC	TC74VHC157F(EL)	IC	DATA SELECTOR		02
	IC21	**XT475A00**	IC	TC74VHC157F(EL)	IC	DATA SELECTOR		02
	IC22	**XS720A00**	IC	TC74HC245AF	IC	TRANSCEIVER		03
	IC23	**XT015A00**	IC	TC74VHC138F	IC	DECODER		02
	IC24	**XT015A00**	IC	TC74VHC138F	IC	DECODER		02
	IC25	**XS048A00**	IC	HD74LVC139FPEL	IC	DEMULTIPLEXER		03
*	IC26	**XV833A00**	IC	MBCG46183-129	IC	GATE ARRAY		06
*	IC27	**XW250A00**	IC	28F160S5	IC	FLASH ROM 16M DATA		21
*	IC28	**XW726A00**	IC	28F160S5	IC	FLASH ROM 16M STYLE		
*	IC29	**XW695100**	IC	MX23C1610PC-10	IC	ROM STYLE 16M		
	IC30	**XT487A00**	IC	TC74VHC245F	IC	TRANSCEIVER		03
*	IC31	**XV636B00**	IC	SPC7212F0A2	IC	SCSI		08
	IC32	**XN028A00**	IC	MC34268DTRK	IC	SCSI REGULATOR		04
	IC33	**XS516A00**	IC	UPC2933T-E1	IC	REGULATOR +3.3V		03
	IC34	**XR337A00**	IC	TC74VHC32F-TEL	IC	OR		01

*: New parts

RANK: Japan only

	REF NO.	PART NO.	DESCRIPTION	部品名	REMARKS	QTY	RANK
	L1	**VR243700**	Chip Inductance 56U LEM2520 T 560J	巻線チップインダクタ			01
	-10	**VR243700**	Chip Inductance 56U LEM2520 T 560J	巻線チップインダクタ			01
	L11	**VT872900**	Chip Inductance 0.22U LEM2520TR22K	チップインダクタ			
	-13	**VT872900**	Chip Inductance 0.22U LEM2520TR22K	チップインダクタ			
	L14	**VR243700**	Chip Inductance 56U LEM2520 T 560J	巻線チップインダクタ			01
	-16	**VR243700**	Chip Inductance 56U LEM2520 T 560J	巻線チップインダクタ			01
	L17	**VT872900**	Chip Inductance 0.22U LEM2520TR22K	チップインダクタ			
	L18	**VR243700**	Chip Inductance 56U LEM2520 T 560J	巻線チップインダクタ			01
	-21	**VR243700**	Chip Inductance 56U LEM2520 T 560J	巻線チップインダクタ			01
	L22	**RD250000**	Carbon Resistor (chip) 0.0 0.0 J	チップ抵抗			01
	-30	**RD250000**	Carbon Resistor (chip) 0.0 0.0 J	チップ抵抗			01
	L31	**VT872900**	Chip Inductance 0.22U LEM2520TR22K	チップインダクタ			
	L32	**RD250000**	Carbon Resistor (chip) 0.0 0.0 J	チップ抵抗			01
	-40	**RD250000**	Carbon Resistor (chip) 0.0 0.0 J	チップ抵抗			01
	TH1	**VV111600**	Protector Switch SMD100-2018-2 SMD	ポリスイッチ			03
*	X1	**VV762900**	Quartz Crystal Unit 7M SMD-49	水晶振動子			03
	X2	**VR870700**	Quartz Crystal Unit 10M SMD-49	水晶振動子			04
*	X3	**V4458700**	Quartz Crystal Unit 22.5M SMD-49	水晶振動子			03
		UF018100	Electrolytic Cap. (chip) 100 6.3V	チップケミコン	C:3,57,85,100,111,121,122,125		01
		UF038100	Electrolytic Cap. (chip) 100 16V	チップケミコン	C:42		01
		UF066100	Electrolytic Cap. (chip) 1 50V	チップケミコン	C:38		01
		UF066330	Electrolytic Cap. (chip) 3.3 50V	チップケミコン	C:116		01
		US060500	Ceramic Capacitor-CH (chip 5P 50V C	チップセラ（ＣＨ）	C:112,115		01
		US061270	Ceramic Capacitor-CH (chip 27P 50V J	チップセラ（ＣＨ）	C:31,32,55,56		01
		US062100	Ceramic Capacitor-SL (chip 100P 50V J	チップセラ（ＳＬ）	C:9,29,52,53,66-70,73,109		01
		US062470	Ceramic Capacitor-SL (chip 470P 50V J	チップセラ（ＳＬ）	C:30		01
		US064100	Ceramic Capacitor-B (chip) 0.01 50V K	チップセラ（Ｂ）	C:1,2,4-8,10-15,21-27,33-36,39-41, 43-51,54,58-64,71,72,74-84, 86-99,101-108,110,113,114, 117-120,123,124,126,127		01
		US135100	Ceramic Capacitor-F (chip) 0.1 16V Z	チップセラ（Ｆ）	C:16-20,28,37,65		01
		RD350000	Carbon Resistor (chip) 0 63M J	チップ抵抗	R:1-6,12,13,16,32-34,38-43,45-52, 59-62,68,71,72,87-90,103,106, 154,156-158,160,161,163,164, 166-168,170-173,175-177, 185-188,191-207,217-226,256-277		01
		RD154560	Carbon Resistor (chip) 56.0 1/4 J	チップ抵抗	R:81		01
		RD154680	Carbon Resistor (chip) 68.0 1/4 J	チップ抵抗	R:82		01
		RD155100	Carbon Resistor (chip) 100.0 1/4 J	チップ抵抗	R:75,101,102,104,105,165,166, 169,174		01
		RD155180	Carbon Resistor (chip) 180.0 1/4 J	チップ抵抗	R:85,86		01
*		**RD155820**	Carbon Resistor (chip) 820.0 1/4 J	チップ抵抗	R:76		01
		RD354470	Carbon Resistor (chip) 47.0 1/4 J	チップ抵抗	R:124-145		01
		RD355100	Carbon Resistor (chip) 100 63M J	チップ抵抗	R:159,178-181		01
		RD355220	Carbon Resistor (chip) 220 63M J	チップ抵抗	R:15,17,20,23,78		01
		RD355680	Carbon Resistor (chip) 680 63M J	チップ抵抗	R:74		01
		RD356100	Carbon Resistor (chip) 1.0K 63M J	チップ抵抗	R:80		01
		RD356330	Carbon Resistor (chip) 3.3K 63M J	チップ抵抗	R:73		01
		RD356680	Carbon Resistor (chip) 6.8K 63M J	チップ抵抗	R:211		01
		RD357100	Carbon Resistor (chip) 10K 63M J	チップ抵抗	R:63-66,69,70,77,79,91-100, 107-123,146-153,182-184,190, 253,278-296		01
		RD358100	Carbon Resistor (chip) 100K 63M J	チップ抵抗	R:10,11,14,18,19,21,22,26-31, 35-37,44,55-58, 83,84,189		01
		RD358470	Carbon Resistor (chip) 470K 63M J	チップ抵抗	R7-9,24,25,67,155,240-248		01
		RD359100	Carbon Resistor (chip) 1.0M 63M J	チップ抵抗	R:53,54,162,214		01
*		**V4266800**	Carbon Resistor (chip) 110 63M F	チップ抵抗	R:210,212,213,215-239		01
*		**V4101200**	Circuit Board DP	ＤＰシート	(XW156C0)		
*	CN1	**V3835800**	Connector TX24-80R-12ST-H1	基板用コネクタ			04
*	CN2	**VE389200**	Base Post Connector 53015 11P SE	ベースポスト			01
*	CN3	**VE389300**	Base Post Connector 53015 12P SE	ベースポスト			01
	CN4	**VV878100**	Connector Base Post DF13-14P-1.25DSA	コネクタベースポスト			04
	CN5	**VB389900**	Connector Base Post PH- 3P TE	コネクタベースポスト			01
	CN6	**VB858300**	Connector Base Post PH- 4P SE	コネクタベースポスト			01
	CN7	**VB389800**	Connector Base Post PH- 2P TE	コネクタベースポスト			01
*	CN8	**V4459100**	Pin Header 88333-044 44P SE	ピンヘッダー			05
	CN9	**VK633200**	Connector Header HIF3FC-34PA2.54DS	コネクタヘッダー			03
	D1	**VB493900**	Diode MA221	ダイオード			01
	IC1	**XV411A00**	IC W24257S-70LE-EL10	ＩＣ	SRAM 256K		07

*: New parts

RANK: Japan only

	REF NO.	PART NO.	DESCRIPTION		部品名	REMARKS	QTY	RANK
	IC1	**XW433A00**	IC	CY62256LL-70SNCT	IC	∫ SRAM 256K		05
	IC2	**XM332A00**	IC	TC74VHC04F	IC	INVERTER		01
*	IC3	**XW314A00**	IC	TC74VHC174F	IC	D-FF		02
	IC4	**XQ595A00**	IC	SED1335F0B	IC	LCDC		08
	IC5	**XM234A00**	IC	HD63B01Y0RCE0F	IC	PKS (CPU)		08
	IC6	**XR337A00**	IC	TC74VHC32F-TEL	IC	OR		01
	IC7	**XV513A00**	IC	MSM82C51A-2GS-K	IC	CEREAL CONTROL		06
*	IC8	**XV481B00**	IC	VIDEO	IC	GATE ARRAY		07
	IC9	**XD660A00**	IC	TC74HCU04AF-TP1	IC	INVERTER		01
*	IC10	**XW313A00**	IC	TC74VHC125F	IC	BUFFER		02
	IC11	**XN431A00**	IC	CXA1645M-T6	IC	RGB ENCODER		06
	IC12	**XV976A00**	IC	M5M51008CFP-70H	IC	SRAM 1M		07
	IC13	**XT487A00**	IC	TC74VHC245F	IC	TRANSCEIVER		03
	IC14	**XT487A00**	IC	TC74VHC245F	IC	TRANSCEIVER		03
	IC15	**XS720A00**	IC	TC74HC245AF	IC	TRANSCEIVER		03
	IC16	**XT812A00**	IC	TC74VHC11F(EL)	IC	TRIPLE 3 INPUT AND		01
	IC17	**XI939A00**	IC	HD63266F	IC	FDC		09
	L1	**VR243700**	Chip Inductance	56U LEM2520 T 560J	巻線チップインダクタ			01
	-26	**VR243700**	Chip Inductance	56U LEM2520 T 560J	巻線チップインダクタ			01
	L27	**VT872900**	Chip Inductance	0.22U LEM2520TR22K	チップインダクタ			
	L28	**VR243700**	Chip Inductance	56U LEM2520 T 560J	巻線チップインダクタ			01
	L29	**VT872900**	Chip Inductance	0.22U LEM2520TR22K	チップインダクタ			
	L30	**VR243700**	Chip Inductance	56U LEM2520 T 560J	巻線チップインダクタ			01
	-52	**VR243700**	Chip Inductance	56U LEM2520 T 560J	巻線チップインダクタ			01
	L53	**VT872900**	Chip Inductance	0.22U LEM2520TR22K	チップインダクタ			
	TR1	**VI242900**	Transistor	2SA1020-Y(TPE6) Y	トランジスタ			01
	TR2	**VJ927200**	Transistor	2SA1162 O,Y	トランジスタ			01
	TR3	**VJ927100**	Transistor	2SC2712 Y	トランジスタ			01
	TR4	**VV556400**	Transistor	2SC2412K Q,R,S	トランジスタ			01
	TR5	**VV556400**	Transistor	2SC2412K Q,R,S	トランジスタ			01
	X1	**VY681200**	Ceramic Resonator	8M CSTCC8.00MG	セラミック発振子			01
	X2	**V3082900**	Quartz Crystal Unit	14.318MHZ DSX151G	水晶振動子			03
	X3	**V3083000**	Quartz Crystal Unit	17.734MHZ DSX151G	水晶振動子			03
	X4	**VZ683900**	Quartz Crystal Unit	6.144MHZ SMD-49	水晶振動子			
	X5	**VQ274900**	Ceramic Resonator	16M CSACS16.00MX24	セラミック振動子			03
		US060500	Ceramic Capacitor-CH (chip	5P 50V C	チップセラ（CH）	C:43		01
		US061100	Ceramic Capacitor-CH (chip	10P 50V D	チップセラ（CH）	C:76,78		01
		US061150	Ceramic Capacitor-CH (chip	15P 50V J	チップセラ（CH）	C:32,40,71,72		01
		US061180	Ceramic Capacitor-CH (chip	18P 50V J	チップセラ（CH）	C:35,39		
		US061270	Ceramic Capacitor-CH (chip	27P 50V J	チップセラ（CH）	C:27,41,44		01
		US061470	Ceramic Capacitor-CH (chip	47P 50V J	チップセラ（CH）	C:28-30,42		01
		US061680	Ceramic Capacitor-SL (chip	68P 50V J	チップセラ（SL）	C:52		01
		US062470	Ceramic Capacitor-SL (chip	470P 50V J	チップセラ（SL）	C:14,77		01
		US064100	Ceramic Capacitor-B (chip)	0.01 50V K	チップセラ（B）	C:1-3,5-10,12,13,15,16,18,22-26, 38,50,51,60-63,66,67,69,70,74, 75,79,81,82		01
		US135100	Ceramic Capacitor-F (chip)	0.1 16V Z	チップセラ（F）	C:17,31,33,34,36,45-47,53,55,58, 64,65,68		01
		UF018100	Electrolytic Cap. (chip)	100 6.3V	チップケミコン	C:4,20,21,73		01
		UF028100	Electrolytic Cap. (chip)	100 10V	チップケミコン	C:37		01
		UF037220	Electrolytic Cap. (chip)	22 16V	チップケミコン	C:54		01
		UF066330	Electrolytic Cap. (chip)	3.3 50V	チップケミコン	C:11		01
		UF118220	Electrolytic Cap. (chip)	220 6.3V UUR0J2	チップケミコン	C:48,49,56,80		01
		UF118470	Electrolytic Cap. (chip)	470 6.3V UUR0J4	チップケミコン	C:59		01
		RD155470	Carbon Resistor (chip)	470.0 1/4 J	チップ抵抗	R:2,3		
		RD350000	Carbon Resistor (chip)	0 63M J	チップ抵抗	R:17-19,22,31-34,65,75,83-85,92, 93,109,115,134-139,147		01
		RD354750	Carbon Resistor (chip)	75 63M J	チップ抵抗	R:86		01
		RD355100	Carbon Resistor (chip)	100 63M J	チップ抵抗	R:40,48-51,53-56,62,80,118-133		01
		RD355220	Carbon Resistor (chip)	220 63M J	チップ抵抗	R:58-60		01
		RD355820	Carbon Resistor (chip)	820 63M J	チップ抵抗	R:76		01
		RD356100	Carbon Resistor (chip)	1.0K 63M J	チップ抵抗	R:77,79,142-146		01
		RD356120	Carbon Resistor (chip)	1.2K 63M J	チップ抵抗	R:78		01
		RD356220	Carbon Resistor (chip)	2.2K 63M J	チップ抵抗	R:66,68-73,81		01
		RD356330	Carbon Resistor (chip)	3.3K 63M J	チップ抵抗	R:94-108,110-114,116		01
		RD356560	Carbon Resistor (chip)	5.6K 63M J	チップ抵抗	R:4,140,141		01
		RD357100	Carbon Resistor (chip)	10K 63M J	チップ抵抗	R:10,28,35-39,52,57,61,63,88,89, 117		01
		RD357150	Carbon Resistor (chip)	15K 63M J	チップ抵抗	R:5-9,15,16,41-47		01
		RD357220	Carbon Resistor (chip)	22K 63M J	チップ抵抗	R:1,11-14,20,21,23-27,29,30,91		01

*: New parts

RANK: Japan only

	REF NO.	PART NO.	DESCRIPTION		部品名	REMARKS	QTY	RANK
		RD357470	Carbon Resistor (chip)	47K 63M J	チップ抵抗	R:87		01
		RD357560	Carbon Resistor (chip)	56K 63M J	チップ抵抗	R:90		01
		RD358470	Carbon Resistor (chip)	470K 63M J	チップ抵抗	R:148		01
		RD359100	Carbon Resistor (chip)	1.0M 63M J	チップ抵抗	R:67,74,82		01
*		**V4197300**	Circuit Board	EN	ＥＮシート	(XW443B0)		
*		**V4197500**	Circuit Board	PN1	ＰＮ１シート	(XW443B0)		
*		**V4197200**	Circuit Board	PN2	ＰＮ２シート	(XW443B0)		
	CN1	**VB858800**	Connector Base Post	PH- 9P SE	コネクタベースポスト			01
	CN2	**VB858300**	Connector Base Post	PH- 4P SE	コネクタベースポスト			01
	CN3	**VH904200**	Connector Base Post	PH-14P SE	コネクタベースポスト			01
	CN4	**VK015600**	Connector Base Post	PH-16P SE	コネクタベースポスト			01
	CN101	**VH904200**	Connector Base Post	PH-14P SE	コネクタベースポスト			01
	CN102	**VB858900**	Connector Base Post	PH-10P SE	コネクタベースポスト			01
	CN201	**VB858300**	Connector Base Post	PH- 4P SE	コネクタベースポスト			01
	D1	**VB941200**	Diode	1SS133,1SS176	ダイオード			01
	-65	**VB941200**	Diode	1SS133,1SS176	ダイオード			01
	D101	**VB941200**	Diode	1SS133,1SS176	ダイオード			01
	-120	**VB941200**	Diode	1SS133,1SS176	ダイオード			01
	D201	**VB941200**	Diode	1SS133,1SS176	ダイオード			01
	D202	**VB941200**	Diode	1SS133,1SS176	ダイオード			01
	EC201	**VU481300**	Encoder	REB161 PVB 15F	１６形エンコーダ	TEMPO,DATA		03
	IC1	**XS711200**	IC	MN101C027YB	Ｉ Ｃ	CPU		06
*	IC2	**V4341100**	Transistor Array	TD62083CP	トランジスタアレイ			04
	IC4	**VH885000**	Transistor Array	TD62785P SOURCE	トランジスタアレイ			04
	LE1	**VG778600**	LED	SLZ290B-03-T2 GR	ＬＥＤ	SONG FILE DIRECTORY		01
	-6	**VG778600**	LED	SLZ290B-03-T2 GR	ＬＥＤ	(SONG 1-5, SONG SETUP)		01
	LE7	**VT659100**	LED	SLZ-174B-03-T1 RE	ＬＥＤ	SONG PLAYER		01
	LE8	**VT659100**	LED	SLZ-174B-03-T1 RE	ＬＥＤ	AUTO ACCOMPANIMENT		01
	LE9	**VG778600**	LED	SLZ290B-03-T2 GR	ＬＥＤ	PRESET STYLE		01
	-26	**VG778600**	LED	SLZ290B-03-T2 GR	ＬＥＤ	(8BEAT,...,BALLROOM) FLASH STYLE(1-8), DISKDIRECT		01
	LE27	**VD180000**	LED	SLZ-190B-03 RE	ＬＥＤ	ACCOMPANIMENT CONTROL		01
	-44	**VD180000**	LED	SLZ-190B-03 RE	ＬＥＤ	(INTRO,...,START/STOP)		01
	LE101	**VT659100**	LED	SLZ-174B-03-T1 RE	ＬＥＤ	BEAT		01
	LE102	**VT361700**	LED	SLZ-274B-03-T1 GR	ＬＥＤ	BEAT		01
	-104	**VT361700**	LED	SLZ-274B-03-T1 GR	ＬＥＤ	BEAT		01
	LE105	**VT425300**	LED	SLZ-290B-17-T1 GR	ＬＥＤ	TEMPO		01
	LE106	**VT425100**	LED	SLZ-190B-17-T1 RE	ＬＥＤ	DATA		01
	SW1	**VV439800**	Tact Switch	SKQNAJ	タクトＳＷ	SONG FILE DIRECTORY,		01
	-65	**VV439800**	Tact Switch	SKQNAJ	タクトＳＷ	SONG PLAYER,AUTO ACCOMP., PRESET STYLE,FLASH STYLE, ACCOMP.CONTROL,MENU, KEYBOARD TRANSPOSE,		01
	SW101	**VV439800**	Tact Switch	SKQNAJ	タクトＳＷ	MULTI PAD,DIGITAL STUDIO DIRECT ACCESS,MAIN MIXER,		01
	-120	**VV439800**	Tact Switch	SKQNAJ	タクトＳＷ	PART(ON/OFF),1-8,EXIT		01
	TR1	**VK165500**	Digital Transistor	DTC123JS TP	デジタルトランジスタ			01
	-4	**VK165500**	Digital Transistor	DTC123JS TP	デジタルトランジスタ			01
	TR5	**VT455400**	Digital Transistor	DTB123YS TP	デジタルトランジスタ			01
*	X1	**V4094000**	Ceramic Resonator	8.00M EFOMC8004T4	セラミック発振子			01
*	X1	**V4100400**	Ceramic Resonator	8.00M EFOMC8004A4	セラミック発振子			02
		VC694800	Semiconductive Cera. Cap.	0.1 25V Z	半導体セラコン	C:1		01
		FG644100	Ceramic Capacitor-F	0.01 50V Z	セラコン（Ｆ）	C:3,6,8		01
		FG651220	Ceramic Capacitor-SL	22P 50V J	セラコン（ＳＬ）	C:4,5		01
		UM378100	Electrolytic Cap.	100.00 10.0V	ケミコン	C:3,9,10		01
*		**UR628100**	Electrolytic Cap.	100.00 10.0V	ケミコン	C:7		01
		HF455100	Carbon Resistor	100.0 1/4 J	カーボン抵抗	R:36		01
		HF454270	Carbon Resistor	27.0 1/4 J	カーボン抵抗	R:1-8,10,12,14,16		01
		HF457100	Carbon Resistor	10.0K 1/4 J	カーボン抵抗	R:17-35		01
		HF457220	Carbon Resistor	22.0K 1/4 J	カーボン抵抗	R:9,11,13,15		01
*		**V4272800**	Circuit Board	FU E GBR	ＦＵシート	E,B (XV921B0)		
*		**V4272700**	Circuit Board	FU U CSA	ＦＵシート	U (XV921B0)		
*		**V4272900**	Circuit Board	FU N	ＦＵシート	N (XV921B0)		
		LB201530	Fuse Holder	PC-PH1	ヒューズホルダ	E,B,U	4	01
		LB201530	Fuse Holder	PC-PH1	ヒューズホルダ	N	12	01
	CN1	**VT807100**	Base Post Connector	VH- 2P TE	ベースポスト			01
	CN2	**VZ365900**	Base Post Connector	VA- 2P TE	ベースツキポスト			01

*: New parts

RANK: Japan only

	REF NO.	PART NO.	DESCRIPTION		部品名	REMARKS	QTY	RANK
	CN3	**VG879900**	Base Post Connector	VA- 2P TE	ベースツキポスト			01
	CN4	**LB932060**	Base Post Connector	VH- 6P TE	ベースポスト			01
	CN5	**LB932050**	Base Post Connector	VH- 5P TE	ベースポスト	N		01
⚠	F1	**KB003080**	Fuse	2.50A S	ヒューズ	E,B		01
⚠	F1	**KB003090**	Fuse	3.15A JU	ヒューズ	U,N		01
⚠	F2	**KB003060**	Fuse	1.60A S	ヒューズ	N		01
⚠	F3	**KB003060**	Fuse	1.60A S	ヒューズ	N		01
	J1	**VD041700**	Jumper Wire	0.55	ジャンパー線	U		
	J2	**VD041700**	Jumper Wire	0.55	ジャンパー線	E,B,U		
⚠	L1	**VY670400**	Coil	S-150-J0	コイル１１．７ミリ	E,B,N		07
⚠	L2	**VF790900**	Coil	SU10V-D20010	コイル　１０Ｕ			03
⚠		**VY675000**	Capacitor	0.01 250V J.U.C.S	規格認定コン　ＫＨ	C:1		01
⚠		**VY675100**	Capacitor	4700P 250V J.U.C.S	規格認定コン　ＫＨ	C:2,3		01
		VT388200	Circuit Board	INLET	インレットシート　ＣＥ	(XQ666B0)		08
		VT308100	AC Inlet	CCT9302-0101M	ＡＣ　インレット　２Ｐ			02
	CN1	**VG879900**	Base Post Connector	VA- 2P TE	ベースツキポスト			01
		VY638900	Circuit Board	INV	ＩＮＶシート	(XT122A0)		13
	C1	**VP318400**	Electrolytic Cap. (chip)	0.068 250 ECQE26	コンデンサ			01
	C2	**VS147400**	Ceramic Capacitor-SL	18P 3KV J	セラコンＳＬ			01
	CN1	**LB919020**	Base Post Connector	XH 2P SE	ベースツキポスト			01
	CN2	**VT389600**	Base Post Connector	53259 4P SE	ベースポスト			01
	L1	**VS587900**	Coil	LH L 08TB221K	コイル　２２０ＵＨ			01
	L2	**VS602500**	Inverter Transformer	CLF16A	インバータトランス			07
	TR1	**VS185700**	Transistor	2SC3669-O/Y(TPF2)	トランジスタ			01
	TR1	**VS185600**	Transistor	2SD1863 TV2 82-390	トランジスタ			01
	TR2	**VS185700**	Transistor	2SC3669-O/Y(TPF2)	トランジスタ			01
	TR2	**VS185600**	Transistor	2SD1863 TV2 82-390	トランジスタ			01
		HF756560	Carbon Resistor	5.6K 1/4 J	カーボン抵抗	R:1,2		01
*		**V4270600**	Circuit Board	DJACK	ＤＪＡＣＫシート	(XV936B0)		
*		**V4582000**	Circuit Board	AJACK	ＡＪＡＣＫシート	(XV936B0)		
		VD041700	Jumper Wire	0.55	ジャンパー線			
		EP600140	Bind Head Tapping Screw-B	3.0X10 MFZN2BL	+バインドＢタイト			01
	CN1	**VB390100**	Connector Base Post	PH- 5P TE	コネクタベースポスト			01
	CN2	**VB390400**	Connector Base Post	PH- 8P TE	コネクタベースポスト			01
	CN3	**VB390000**	Connector Base Post	PH- 4P TE	コネクタベースポスト			01
	CN4	**VB389800**	Connector Base Post	PH- 2P TE	コネクタベースポスト			01
	CN101	**VE352600**	Connector Base Post	PH-14P TE	コネクタベースポスト			01
	CN102	**VB390000**	Connector Base Post	PH- 4P TE	コネクタベースポスト			01
	CN104	**VB389900**	Connector Base Post	PH- 3P TE	コネクタベースポスト			01
	D1	**VB941200**	Diode	1SS133,1SS176	ダイオード			01
	-5	**VB941200**	Diode	1SS133,1SS176	ダイオード			01
	IC1	**VD473200**	Photo Coupler	6N137	フォトカプラ			05
	IC2	**VD473200**	Photo Coupler	6N137	フォトカプラ			05
	IC3	**XU463A00**	IC	SN75C1168N	Ｉ　Ｃ	LINE TRANSCEIVER		05
	IC4	**IG142250**	IC	SN74HCU04N	Ｉ　Ｃ	INVERTER		01
	JK1	**VS056300**	Phone Jack	HLJ7001-01-	ホーンコネクタ	FOOT PEDAL(VOLUME)		01
	JK2	**VB312600**	Phone Jack	YKB21-5012 BL	ホーンコネクタ（黒）	FOOT PEDAL(SWITCH 2)		02
	JK3	**VB312600**	Phone Jack	YKB21-5012 BL	ホーンコネクタ（黒）	FOOT PEDAL(SWITCH 1)		02
	JK4	**VJ249300**	DIN Connector	5P3 YKF51-50	ＤＩＮコネクタ２連	MIDI B(IN/OUT)		03
	JK5	**VJ249300**	DIN Connector	5P3 YKF51-50	ＤＩＮコネクタ２連	MIDI A(IN/OUT)		03
	JK6	**VM761000**	DIN Connector	DIN 8P MD-S810	複合コネクタ	TO HOST		03
	JK7	**VZ743800**	DIN Connector	DIN 6P MD-S610	複合コネクタ	PC KEYBOARD		02
	JK8	**VI311100**	Pin Jack	YKC21-3017 1P	ピンジャック　１Ｐ	VIDEO OUT(NTSC/PAL)		01
	JK101	**LB101870**	Phone Jack	YKB21-5006	ホーンコネクタ	LOOP SEND(L/L+R)		03
	JK102	**VB312600**	Phone Jack	YKB21-5012 BL	ホーンコネクタ（黒）	LOOP SEND(R)		02
	JK103	**VC687500**	Phone Jack	YKB21-5014 BL	ホーンコネクタ（黒）	AUX IN/LOOP RETURN(L/L+R)		01
	JK103	**VB312600**	Phone Jack	YKB21-5012 BL	ホーンコネクタ（黒）			02
	JK104	**VB312600**	Phone Jack	YKB21-5012 BL	ホーンコネクタ（黒）	AUX IN/LOOP RETURN(R)		02
	JK105	**VC687500**	Phone Jack	YKB21-5014 BL	ホーンコネクタ（黒）	LINE OUT MAIN(L/L+R)		01
	JK106	**VB312600**	Phone Jack	YKB21-5012 BL	ホーンコネクタ（黒）	LINE OUT MAIN(R)		02
	JK107	**LB101870**	Phone Jack	YKB21-5006	ホーンコネクタ	LINE OUT SUB(1)		03
	JK108	**LB101870**	Phone Jack	YKB21-5006	ホーンコネクタ	LINE OUT SUB(2)		03
	L1	**VB835000**	Coil	FL5R200QNT	コイル　２０Ｕ			01
	-20	**VB835000**	Coil	FL5R200QNT	コイル　２０Ｕ			01
	L21	**VD041700**	Jumper Wire	0.55	ジャンパー線			
	L22	**VD041700**	Jumper Wire	0.55	ジャンパー線			
	L101	**VB835000**	Coil	FL5R200QNT	コイル　２０Ｕ			01

*: New parts

RANK: Japan only

REF NO.	PART NO.	DESCRIPTION		部品名	REMARKS	QTY	RANK
L102	**VB835000**	Coil	FL5R200QNT	コイル 20U			01
L103	**GE300670**	Ferrite Beads	BL02RN2-R62T4	フェライトビーズ			02
L104	**VB835000**	Coil	FL5R200QNT	コイル 20U			01
L105	**VB835000**	Coil	FL5R200QNT	コイル 20U			01
L106	**VF456600**	Coil	SBT-0180W	コイル 80U			03
L107	**VF456600**	Coil	SBT-0180W	コイル 80U			03
L108	**VB835000**	Coil	FL5R200QNT	コイル 20U			01
L109	**GE300670**	Ferrite Beads	BL02RN2-R62T4	フェライトビーズ			02
L110	**VB835000**	Coil	FL5R200QNT	コイル 20U			01
L111	**VB835000**	Coil	FL5R200QNT	コイル 20U			01
L112	**GE300670**	Ferrite Beads	BL02RN2-R62T4	フェライトビーズ			02
L113	**VB835000**	Coil	FL5R200QNT	コイル 20U			01
MFA	**--**	Jack Plate A		ジャック金具 A	(V387430)		
MFB	**--**	Jack Plate B		ジャック金具 B	(V387440)		
MFC	**--**	Jack Plate C		ジャック金具 C	(V387450)		
MFD	**--**	Jack Plate D		ジャック金具 D	(V387460)		
MFE	**--**	Jack Plate E		ジャック金具 E	(V387470)		
SW1	**VQ665200**	Slide Switch	SSSF144-S06N-0	スライド SW	HOST SELECT(MIDI A)		03
VR101	**VV049200**	Rotary Variable Resistor	B 10K RK09K12A0	二連ロータリー VR	AUX IN/LOOP RETURN(TRIM)		03
WB1	**GE300670**	Ferrite Bead	BL02RN2-R62T4	フェライトビーズ			02
-7	**GE300670**	Ferrite Bead	BL02RN2-R62T4	フェライトビーズ			02
WB101	**VB835000**	Coil	FL5R200QNT	コイル 20U			01
-103	**VB835000**	Coil	FL5R200QNT	コイル 20U			01
	FG612220	Ceramic Capacitor-B	220P 50V K	セラコン（B）	C:5,6,9,10		01
	FG613100	Ceramic Capacitor-B	1000P 50V K	セラコン（B）	C:18,101,102,105-108		01
	FG644100	Ceramic Capacitor-F	0.01 50V Z	セラコン（F）	C:7,8,11,12,14,15,17,19,109		01
	UN817470	Electrolytic Cap.-BP	47.00 6.3V	BPケミコン	C:16		01
	UN866470	Electrolytic Cap.-BP	4.7 50.0V	BPケミコン	C:103,104		01
	UR837100	Electrolytic Cap.	10.00 16.0V	ケミコン	C:13		01
	UR866100	Electrolytic Cap.	1.00 50.0V	ケミコン	C:2		01
	VC694800	Semiconductive Cera. Cap.	0.1 25V Z	半導体セラコン	C:1,3,4		01
	HF755100	Carbon Resistor	100.0 1/4 J	カーボン抵抗	R:28,29		01
	HF755220	Carbon Resistor	220.0 1/4 J	カーボン抵抗	R:11-13,15-17,24,26		01
	HF756100	Carbon Resistor	1.0K 1/4 J	カーボン抵抗	R:2-4,7,8,14,18,30,33		01
	HF757100	Carbon Resistor	10.0K 1/4 J	カーボン抵抗	R: 1,19-23,25,27,31,32,102-107		01
	HF757220	Carbon Resistor	22.0K 1/4 J	カーボン抵抗	R:5,9		01
	HF758470	Carbon Resistor	470.0K 1/4 J	カーボン抵抗	R:6,10		01
	VI912000	Circuit Board	LC	MKシート	(XH07890)		14
	VQ359100	Adhesive Tape	24mm 330m	粘着テープ			
	VA078900	Jumper Wire	0.55	ジャンパー線			
CN1	**VE387800**	Base Post Connector	53014 11P TE	ベースポスト			01
CN2	**VE387900**	Base Post Connector	53014 12P TE	ベースポスト			01
CN3	**VE387000**	Base Post Connector	53014 3P TE	ベースポスト			03
D1	**VB941200**	Diode	1SS133,1SS176	ダイオード			01
-123	**VB941200**	Diode	1SS133,1SS176	ダイオード			01
IC1	**IG001390**	IC	RC4558D-V	IC	OP AMP		03
SC1	**LB016030**	Connector	FFC 3P TE	コネクタ			01
VR1	**V4819100**	Trimmer Potentiometer	B 500.0K 3P VZ0	半固定VR			02
VR2	**V4818900**	Trimmer Potentiometer	B 100.0K 3P VZ0	半固定VR			02
	VC694800	Semiconductive Cera. Cap.	0.1 25V Z	半導体セラコン	C:1,2,3		01
	UJ827470	Electrolytic Cap.	47.00 10.0V	ケミコン	C:4		01
	HF755150	Carbon Resistor	150.0 1/4 J	カーボン抵抗	R:1,3		01
	HF756100	Carbon Resistor	1.0K 1/4 J	カーボン抵抗	R:4,5,8,10,11		01
	HF756220	Carbon Resistor	2.2K 1/4 J	カーボン抵抗	R:9		01
	HF756680	Carbon Resistor	6.8K 1/4 J	カーボン抵抗	R:2		01
	HF757470	Carbon Resistor	47.0K 1/4 J	カーボン抵抗	R:6,7		01
*	**V4197800**	Circuit Board	MV	MVシート	(XW438B0)		
*	**V4197700**	Circuit Board	MIC/VR	MIC／VRシート	(VW438B0)		
*	**V4197600**	Circuit Board	MIC/HP	MIC／HPシート	(XW438B0)		
*	**V4197100**	Circuit Board	PN3	PN3シート	(XW438B0)		
	VD041700	Jumper Wire	0.55	ジャンパー線			
	--	Connector Assembly	MIC-VR	MIC VR 束線	(V414560)		
CN1	**VK015600**	Connector Base Post	PH-16P SE	コネクタベースポスト			01
CN2	**VB858900**	Connector Base Post	PH-10P SE	コネクタベースポスト			01
CN3	**VB858200**	Connector Base Post	PH- 3P SE	コネクタベースポスト			01
CN102	**VB390500**	Connector Base Post	PH- 9P TE	コネクタベースポスト			03
CN103	**VB390300**	Connector Base Post	PH- 7P TE	コネクタベースポスト			01
CN301	**VB390400**	Connector Base Post	PH- 8P TE	コネクタベースポスト			01

*: New parts

RANK: Japan only

	REF NO.	PART NO.	DESCRIPTION		部品名	REMARKS	QTY	RANK
	D1	**VB941200**	Diode	1SS133,1SS176	ダイオード			01
	-63	**VB941200**	Diode	1SS133,1SS176	ダイオード			01
	IC101	**XC520A00**	IC	UPC4570C	IC	OP AMP		01
	IC102	**XC520A00**	IC	UPC4570C	IC	OP AMP		01
	JK101	**LB101870**	Phone Jack	YKB21-5006	ホーンコネクタ	MIC/LINE IN		03
	JK102	**LB101870**	Phone Jack	YKB21-5006	ホーンコネクタ	PHONES		03
	L101	**VF456600**	Coil	SBT-0180W	コイル 80U			03
	LE1	**VZ460300**	Photo Diode	SELU6814CTP5	発光ダイオード	VOICE EFFECT		02
	-6	**VZ460300**	Photo Diode	SELU6814CTP5	発光ダイオード	VOICE EFFECT		02
	LE7	**VG778600**	LED	SLZ290B-03-T2 GR	LED	PART SELECT		01
	-10	**VG778600**	LED	SLZ290B-03-T2 GR	LED	(LEFT,RIGHT1-3)		01
	LE11	**VD180000**	LED	SLZ-190B-03 RE	LED	PART ON/OFF		01
	-15	**VD180000**	LED	SLZ-190B-03 RE	LED	(LEFT HOLD,LEFT,RIGHT1-3)		01
	LE16	**VG778600**	LED	SLZ290B-03-T2 GR	LED	VOICE(PIANO,...,PERCUSSION)		01
	-31	**VG778600**	LED	SLZ290B-03-T2 GR	LED	XG,ORGAN FLUTES, CUSTOM VOICE		01
	LE32	**VZ460300**	Photo Diode	SELU6814CTP5	発光ダイオード	VOCAL HARMONY		02
	-34	**VZ460300**	Photo Diode	SELU6814CTP5	発光ダイオード	(TALK,DSP,V.H.)		02
	LE35	**VT361700**	LED	SLZ-274B-03-T1 GR	LED	DISK IN USE		01
	LE36	**VT659100**	LED	SLZ-174B-03-T1 RE	LED	REGIST.MEMORY(FREEZE)		01
	LE201	**VD180000**	LED	SLZ-190B-03 RE	LED	MIC/LINE IN(OVER)		01
	LE202	**VG778600**	LED	SLZ290B-03-T2 GR	LED	MIC/LINE IN(SIGNAL)		01
	SW1	**VV439800**	Tact Switch	SKQNAJ	タクトSW	LCD Selects(R),DEMO,		01
	-63	**VV439800**	Tact Switch	SKQNAJ	タクトSW	VOICE EFFECT,PAGE CONT., MUSIC DATABASE,VOICE, REGIST.MEMORY,PART SELECT PART ON/OFF,UPPER OCTAVE, MEMORY,VOCAL HARMONY, DISK IN USE		01
*	SW201	**V4400100**	Slide Switch	SSSF025000	スライドSW	MIC/LINE IN(MIC1,2,LINE)		02
	TH1	**VS696900**	Thermistor	ERTD2ZGJ202T 2K	サーミスタ			01
	TR1	**IC174070**	Transistor	2SC1740S R,S	トランジスタ			01
*	VR1	**V3820700**	Rotary Variable Resistor	B 10K RK09K1130A5R	ロータリーVR 1連	LCD CONTRAST		01
	VR201	**VF636100**	Rotary Variable Resistor	A 10.0K RK09K12C	二連ロータリーVR	INPUT VOLUME		03
	VR301	**VR531900**	Rotary Variable Resistor	A 10.0K RK14K12C0	二連ロータリーVR	MASTER VOLUME		03
	WB101	**GE300670**	Ferrite Bead	BL02RN2-R62T4	フェライトビーズ			02
	-116	**GE300670**	Ferrite Bead	BL02RN2-R62T4	フェライトビーズ			02
*	ZD1	**VP584900**	Zener Diode	MTZJ4.3B 4.3V	ツェナーダイオード			01
		FG612220	Ceramic Capacitor-B	220P 50V K	セラコン(B)	C:105		01
		FG613270	Ceramic Capacitor-B	2700P 50V K	セラコン(B)	C:110		01
		FG613820	Ceramic Capacitor-B	8200P 50V K	セラコン(B)	C:109		01
		FG644100	Ceramic Capacitor-F	0.01 50V Z	セラコン(F)	C:117,118		01
		FG652100	Ceramic Capacitor-SL	100P 50V J	セラコン(SL)	C:103,107,108		01
		VC694800	Semiconductive Cera. Cap.	0.1 25V Z	半導体セラコン	C:101,102,113,114		01
		VT757800	Monolithic Ceramic Cap.	1.000 25V Z	積層セラコン	C:104		01
		UN866100	Electrolytic Cap.-BP	1.00 50.0V	BPケミコン	C:106,111,112		01
		UR848100	Electrolytic Cap.	100.00 25.0V	ケミコン	C:115,116		01
		HF455100	Carbon Resistor	100.0 1/4 J	カーボン抵抗	R:103		01
		HF455150	Carbon Resistor	150.0 1/4 J	カーボン抵抗	R:5		01
		HF455220	Carbon Resistor	220.0 1/4 J	カーボン抵抗	R:108,111		01
		HF456100	Carbon Resistor	1.0K 1/4 J	カーボン抵抗	R:101,106,117		01
		HF456120	Carbon Resistor	1.2K 1/4 J	カーボン抵抗	R:1,2		01
		HF456330	Carbon Resistor	3.3K 1/4 J	カーボン抵抗	R:4,109		01
		HF456560	Carbon Resistor	5.6K 1/4 J	カーボン抵抗	R:3		01
		HF457100	Carbon Resistor	10.0K 1/4 J	カーボン抵抗	R:110		01
		HF457270	Carbon Resistor	27.0K 1/4 J	カーボン抵抗	R:102		01
		HF458100	Carbon Resistor	100.0K 1/4 J	カーボン抵抗	R:104,105,112,113		01
		VH696500	Carbon Resistor	68.0 1/2 J	カーボン抵抗	R:114,115		
*		**V4272100**	Circuit Board	NET	NETシート	(XW374B0)		
	CN1	**LB932020**	Base Post Connector	VH- 2P TE	ベースポスト			01
	CN2	**--**	Connector Assembly	SP	SP束線	(V415410)		
*	L1	**V4133500**	Network Coil	0.57mm MC DRUM 0.5	ネットワークコイル			03
*		**VQ755900**	Electrolytic Cap.-BP	3.3 UF 50.0V	BPケミコン	C:1		01
*		**V4271500**	Circuit Board	SCSI	SCSIシート	(XW083C0)		
*	CN1	**VV331100**	Connector	FCN-235D050-L/L#0G	コネクタFCN−235D			05
	CN2	**VL536600**	Connector Header	HIF3FC-50PA2.54DSA	コネクタヘッダー			03
	L1	**RD250000**	Carbon Resistor (chip)	0.0 0.0 J	チップ抵抗			01
	-18	**RD250000**	Carbon Resistor (chip)	0.0 0.0 J	チップ抵抗			01

*: New parts

RANK: Japan only

	REF NO.	PART NO.	DESCRIPTION		部品名	REMARKS	QTY	RANK
*		**V4101300**	Circuit Board	TG	**TGシート**	(XW157E0)		
		VK863100	IC Socket	DICF-42CS-E	**ICソケット**			03
	CN1	**LB919020**	Base Post Connector	XH 2P SE	**ベーススツキポスト**			01
	CN2	**LB933090**	Base Post Connector	VH- 9P SE	**ベースポスト**			02
	CN3	**LB919030**	Base Post Connector	XH 3P SE	**ベーススツキポスト**			01
	CN4	**LB919040**	Base Post Connector	XH 4P SE	**ベーススツキポスト**			01
	CN5	**VB858900**	Connector Base Post	PH-10P SE	**コネクタベースポスト**			01
	CN6	**VB858200**	Connector Base Post	PH- 3P SE	**コネクタベースポスト**			01
	CN7	**VB858800**	Connector Base Post	PH- 9P SE	**コネクタベースポスト**			01
	CN8	**VV345900**	SIMM Socket	SX3LB-72S-1.27DSA	**SIMMソケット**			04
	CN9	**VV345900**	SIMM Socket	SX3LB-72S-1.27DSA	**SIMMソケット**			04
*	CN11	**V3836000**	Connector	TX24-80R-LT-H1	**基板用コネクタ**			04
	CN12	**VB389800**	Connector Base Post	PH- 2P TE	**コネクタベースポスト**			01
	D1	**VB493900**	Diode	MA221	**ダイオード**			01
	-4	**VB493900**	Diode	MA221	**ダイオード**			01
	EM1	**FZ006970**	LC Filter	LS MT Y223NB	**LCフィルターEMI**			02
	IC1	**XS725A00**	IC	TC203C760HF-002	**IC**	SWP30B		19
	IC2	**XT013A00**	IC	YSS236-F	**IC**	VOP3		13
	IC3	**XM332A00**	IC	TC74VHC04F	**IC**	INVERTER		01
	IC4	**XU829A00**	IC	PCM1716E	**IC**	DAC		06
	IC5	**XU829A00**	IC	PCM1716E	**IC**	DAC		06
	IC6	**XU462A00**	IC	MSM514260C-60TS-K	**IC**	DRAM 4M		08
	IC7	**XS963A00**	IC	HD74LVC138FP	**IC**	DECORDER		02
	IC8	**XU462A00**	IC	MSM514260C-60TS-K	**IC**	DRAM 4M		08
	IC9	**XS516A00**	IC	UPC2933T-E1	**IC**	REGULATOR +3.3V		03
	IC10	**XS516A00**	IC	UPC2933T-E1	**IC**	REGULATOR +3.3V		03
*	IC11	**XW795A00**	IC	HD6437043AE00F	**IC**	CPU		11
	IC12	**XS725A00**	IC	TC203C760HF-002	**IC**	SWP30B		19
	IC13	**XF483A00**	IC	LB1443N	**IC**	LEVEL METER DRIVER		02
	IC14	**XF291A00**	IC	UPC4570G2	**IC**	OP AMP		03
	IC15	**XV510A00**	IC	AK5351-VF-E2	**IC**	A/D CONVERTER		08
	IC16	**XS370A00**	IC	D65621GF-028-3B9	**IC**	SMI		06
	IC17	**XU462A00**	IC	MSM514260C-60TS-K	**IC**	DRAM 4M		08
	IC18	**XR337A00**	IC	TC74VHC32F-TEL	**IC**	OR		01
	IC19	**XT487A00**	IC	TC74VHC245F	**IC**	TRANSCEIVER		03
	-23	**XT487A00**	IC	TC74VHC245F	**IC**	TRANSCEIVER		03
	IC24	**XT014A00**	IC	TC74VHC08F	**IC**	AND		01
*	IC25	**XW724B00**	IC	28F400B5	**IC**	SUB PROGRAM LOW 4M F-ROM		
*	IC26	**XW725B00**	IC	28F400B5	**IC**	SUB PROGRAM HIGH 4M F-ROM		
	IC27	**XT014A00**	IC	TC74VHC08F	**IC**	AND		01
	IC28	**XR337A00**	IC	TC74VHC32F-TEL	**IC**	OR		01
	IC29	**XT487A00**	IC	TC74VHC245F	**IC**	TRANSCEIVER		03
	-32	**XT487A00**	IC	TC74VHC245F	**IC**	TRANSCEIVER		03
*	IC33	**XW696100**	IC	MX23C1610PC-10	**IC**	ROM 16M PARAMETER		08
	IC34	**XT487A00**	IC	TC74VHC245F	**IC**	TRANSCEIVER		03
	-37	**XT487A00**	IC	TC74VHC245F	**IC**	TRANSCEIVER		03
	IC38	**XU462A00**	IC	MSM514260C-60TS-K	**IC**	DRAM 4M		08
	IC39	**XU462A00**	IC	MSM514260C-60TS-K	**IC**	DRAM 4M		08
	IC40	**XR337A00**	IC	TC74VHC32F-TEL	**IC**	OR		01
*	IC41	**XW765100**	IC	MX23C6410MC-10	**IC**	ROM 64M WAVE2 LOW		11
*	IC42	**XW766100**	IC	MX23C6410MC-10	**IC**	ROM 64M WAVE2 HIGH		11
*	IC43	**XW154A00**	IC	SLA904FF1T	**IC**	PIF32		05
*	IC44	**XW763200**	IC	MX23C6410MC-10	**IC**	ROM 64M WAVE1 LOW		
*	IC45	**XW764200**	IC	MX23C6410MC-10	**IC**	ROM 64M WAVE1 HIGH		
	IC46	**XS049A00**	IC	HD74LVC541FPEL	**IC**	BUFFER		03
	IC47	**XU462A00**	IC	MSM514260C-60TS-K	**IC**	DRAM 4M		08
	IC48	**XU462A00**	IC	MSM514260C-60TS-K	**IC**	DRAM 4M		08
	IC49	**XS891A00**	IC	UPC29M05T-E1	**IC**	REGULATOR +5V		03
	L1	**VT872900**	Chip Inductance	0.22U LEM2520TR22K	**チップインダクタ**			
	-7	**VT872900**	Chip Inductance	0.22U LEM2520TR22K	**チップインダクタ**			
	L8	**VR243700**	Chip Inductance	56U LEM2520 T 560J	**巻線チップインダクタ**			01
	-22	**VR243700**	Chip Inductance	56U LEM2520 T 560J	**巻線チップインダクタ**			01
	X1	**VV335600**	Quartz Crystal Unit	33.8688M DSO751S	**水晶発振器**			06
	X2	**VV762900**	Quartz Crystal Unit	7M SMD-49	**水晶振動子**			03
		UE166470	Electrolytic Cap.-BP (chip	4.7 50V RV2BP	**チップBPコン**	C:109		01
		UF018100	Electrolytic Cap. (chip)	100 6.3V	**チップケミコン**	C:3,7,80,87,88,97,101,150,169, 191,209,212,237,238		01
		UF027220	Electrolytic Cap. (chip)	22 10V	**チップケミコン**	C:16		01
		UF028100	Electrolytic Cap. (chip)	100 10V	**チップケミコン**	C:59,60		01

*: New parts

RANK: Japan only

REF NO.	PART NO.	DESCRIPTION		部品名	REMARKS	QTY	RANK
	UF037100	Electrolytic Cap. (chip)	10 16V	チップケミコン	C:18,53,54,65,66,71-74,111,114, 134,135,140		01
	UF038100	Electrolytic Cap. (chip)	100 16V	チップケミコン	C:2,23,28,40,45,46,69,70,225,254		01
	UF046470	Electrolytic Cap. (chip)	4.7 25V	チップケミコン	C:51,52,117		01
	UF066330	Electrolytic Cap. (chip)	3.3 50V	チップケミコン	C:246		01
	UF128470	Electrolytic Cap. (chip)	470 10V UUR1A4	チップケミコン	C:14		02
	UF138470	Electrolytic Cap. (chip)	470 16V	チップケミコン	C:34,38		02
	US061270	Ceramic Capacitor-CH (chip	27P 50V J	チップセラ（ＣＨ）	C:25-27,32,130,131,145,147,151, 153-155,158-162,170-172		01
	US062100	Ceramic Capacitor-SL (chip	100P 50V J	チップセラ（ＳＬ）	C:110,125		01
	US062270	Ceramic Capacitor-SL (chip	270P 50V J	チップセラ（ＳＬ）	C:115,122		01
	US062470	Ceramic Capacitor-SL (chip	470P 50V J	チップセラ（ＳＬ）	C:129		01
	US064100	Ceramic Capacitor-B (chip)	0.01 50V K	チップセラ（Ｂ）	C:1,4-6,8-13,15,17,20-22,24,29-31, 33,35-37,39,41-44,49,50,61-64, 75-79,81-86,89-96,98,99,102-108, 112,116,118,120,123,124,126, 127,132,133,139,142-144,146, 148,149,152,156,157,163-168, 173-190,192-208,210,211, 213-224,226-236,239-245,249		01
	US135100	Ceramic Capacitor-F (chip)	0.1 16V Z	チップセラ（Ｆ）	C:19,47,48,55-58,67,68,100,113, 119,121,128,136-138,141,255, 256		01
	RD350000	Carbon Resistor (chip)	0 63M J	チップ抵抗	R:9,11,16,18-20,22-24,27,28,33,34, 43-47,55-59,65-67,71-73,77-79, 81,82,84,86,88,93,95-98,100-104, 113-115,121,122,137-142,147, 181,182,186,187,192,194,195, 200,201,205,213,215,		01
	RD354330	Carbon Resistor (chip)	33 63M J	チップ抵抗	R:224-253		01
	RD354470	Carbon Resistor (chip)	47 63M J	チップ抵抗	R:35,123,143-146		01
	RD354680	Carbon Resistor (chip)	68 63M J	チップ抵抗	R:5-7,10,12-15,17,118-120,125-136		01
	RD355100	Carbon Resistor (chip)	100 63M J	チップ抵抗	R:2,3,21,25,26,29-32,36,39-42,109, 116,117,124,190,191,202,203, 214,216,254-281		01
	RD355220	Carbon Resistor (chip)	220 63M J	チップ抵抗	R:112		01
	RD355330	Carbon Resistor (chip)	330 63M J	チップ抵抗	R:107,108		01
	RD355390	Carbon Resistor (chip)	390 63M J	チップ抵抗	R:282-287		01
	RD355470	Carbon Resistor (chip)	470 63M J	チップ抵抗	R:217-220		01
	RD355680	Carbon Resistor (chip)	680 63M J	チップ抵抗	R:111		01
	RD356100	Carbon Resistor (chip)	1.0K 63M J	チップ抵抗	R:4		01
	RD356330	Carbon Resistor (chip)	3.3K 63M J	チップ抵抗	R:110		01
	RD356470	Carbon Resistor (chip)	4.7K 63M J	チップ抵抗	R:75,76		01
	RD356560	Carbon Resistor (chip)	5.6K 63M J	チップ抵抗	R:85		01
	RD356680	Carbon Resistor (chip)	6.8K 63M J	チップ抵抗	R:1		01
	RD357100	Carbon Resistor (chip)	10K 63M J	チップ抵抗	R:48,49,60,80,83,87,94,99,105,106, 148-179,188,189,199,204,223		01
	RD358100	Carbon Resistor (chip)	100K 63M J	チップ抵抗	R:50-54,61-64,68-70,74,89-92		01
	RD358470	Carbon Resistor (chip)	470K 63M J	チップ抵抗	R:37,38,206-212		01
*	**V4272300**	Circuit Board	VSEL	ＶＳＥＬシート	N (XW375B0)		
	EP600140	Bind Head Tapping Screw-B	3.0X10 MFZN2BL	+バインドＢタイト			01
	--	Holder, JACK		ジャック金具Ｆ	(V389140)		
CN1	**LB933050**	Base Post Connector	VH- 5P SE	ベースポスト			01
⚠ SW1	**LB202280**	Voltage Selector	HXW0131-01-910	電圧切替器			03
⚠*	**XW052A00**	Power Transformer	E ICE65 E	電源トランス	E,B		11
⚠*	**XW051A00**	Power Transformer	UL/CSA A	電源トランス	U		11
⚠*	**XW053B00**	Power Transformer	N ICE65 E	電源トランス	N		11
⚠	**VT015900**	AC Cord Set	E 2P 2.5m	電源コードセット	E,N		05
⚠	**VT015800**	AC Cord Set	U2P 2.44m 7A	電源コードセット	U		06
⚠	**VT016000**	AC Cord Set	B 2P 2.5m	電源コードセット	B		08
⚠	**VK726100**	Connector	CCT5902	電源コネクタ	N		03
⚠	**VC843500**	Push Switch	SDDLB1216A J.U.C.S	プッシュＳＷ	POWER ON/OFF		03
*	**V3331300**	LCD	EDMMPU3BCF	液晶ディスプレイ			23
	V3075300	Floppy Disk Drive	MF355F-3252MG F	３．５”ＦＤＤ			16

*: New parts

RANK: Japan only

	REF NO.	PART NO.	DESCRIPTION		部品名	REMARKS	QTY	RANK
*		**XV992A00**	Speaker	13.0cm 8 ohm 50 W	スピーカ	WOOFER		09
*		**XV993A00**	Speaker	3.0cm 8 ohm 25 W	スピーカ	TWEETER		08
*		**V3676700**	Power Supply Unit		電源ユニット			19
⚠ *		**XW052A00**	Power Transformer	E ICE65 E	電源トランス	E,B		11
⚠ *		**XW051A00**	Power Transformer	UL/CSA A	電源トランス	U		11
⚠ *		**XW053B00**	Power Transformer	N ICE65 E	電源トランス	N		11
		VT695100	Rotary Variable Resistor	10.0K RK163111	ロータリーVR	PITCH/MODULATION		03

*: New parts

RANK: Japan only

■ PSR-9000 OVERALL CIRCUIT DIAGRAM 1/4 (DP, A.JACK, D.JACK, MIC/VR, MIC/HP, MV, AM, MK)

DP

D. JACK

A. JACK

MIC/VR

MIC/HP

MV

AM

MK

28CC1-8814957 0

28CA2-8815163 2

28CA2-8815163 2

28CC1-8815136

28CC1-8815136

28CA2-8815164 2

28CA2-8815164 2

28CC1-8812216

PSR-9000

■ PSR-9000 OVERALL CIRCUIT DIAGRAM 3/4 (DM)

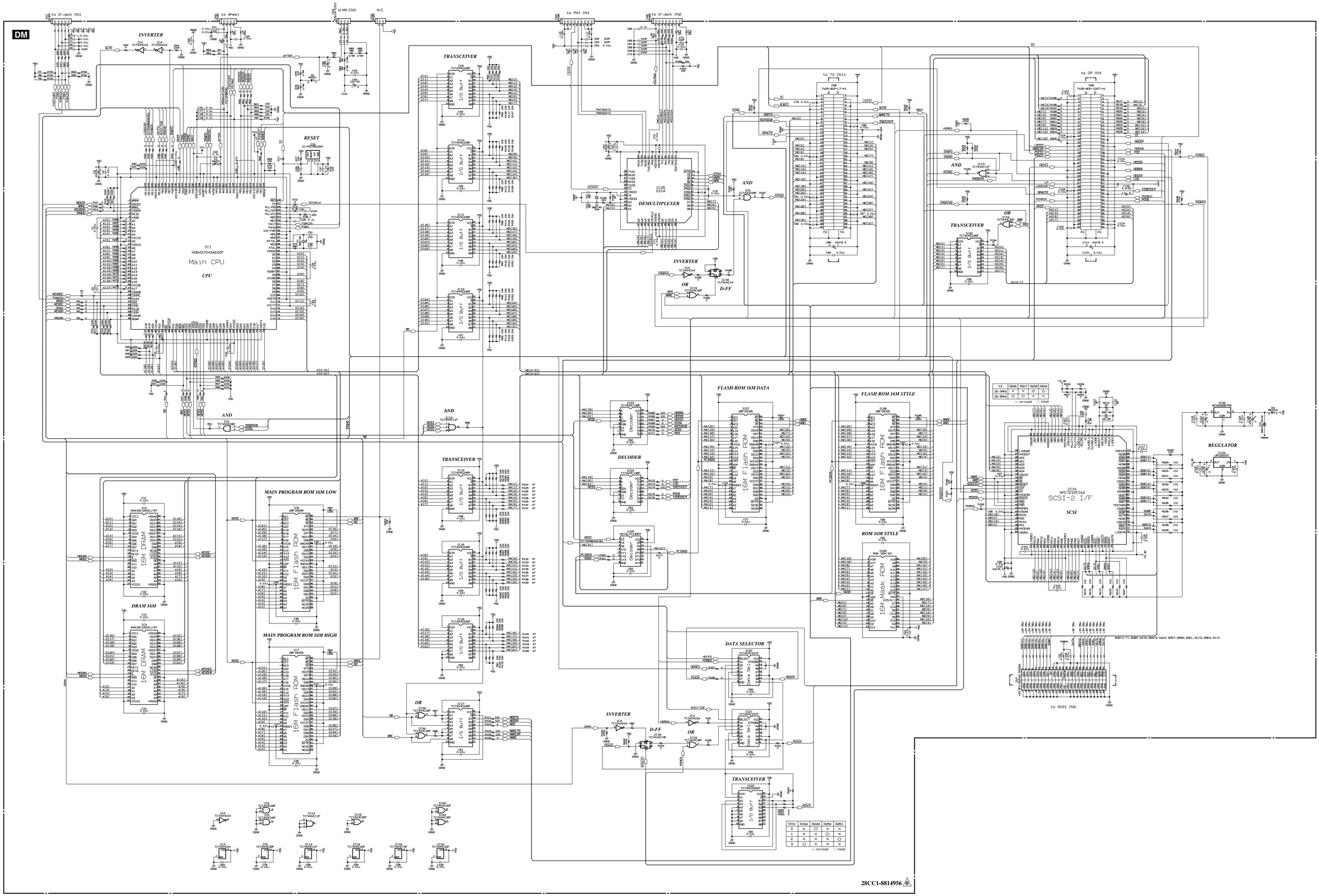

PSR-9000 OVERALL CIRCUIT DIAGRAM 2/4 (TG)

TG

■ PSR-9000 OVERALL CIRCUIT DIAGRAM 4/4 (PN1, PN2, PN3, EN, SCSI, AMP, FU, VSEL, NET)

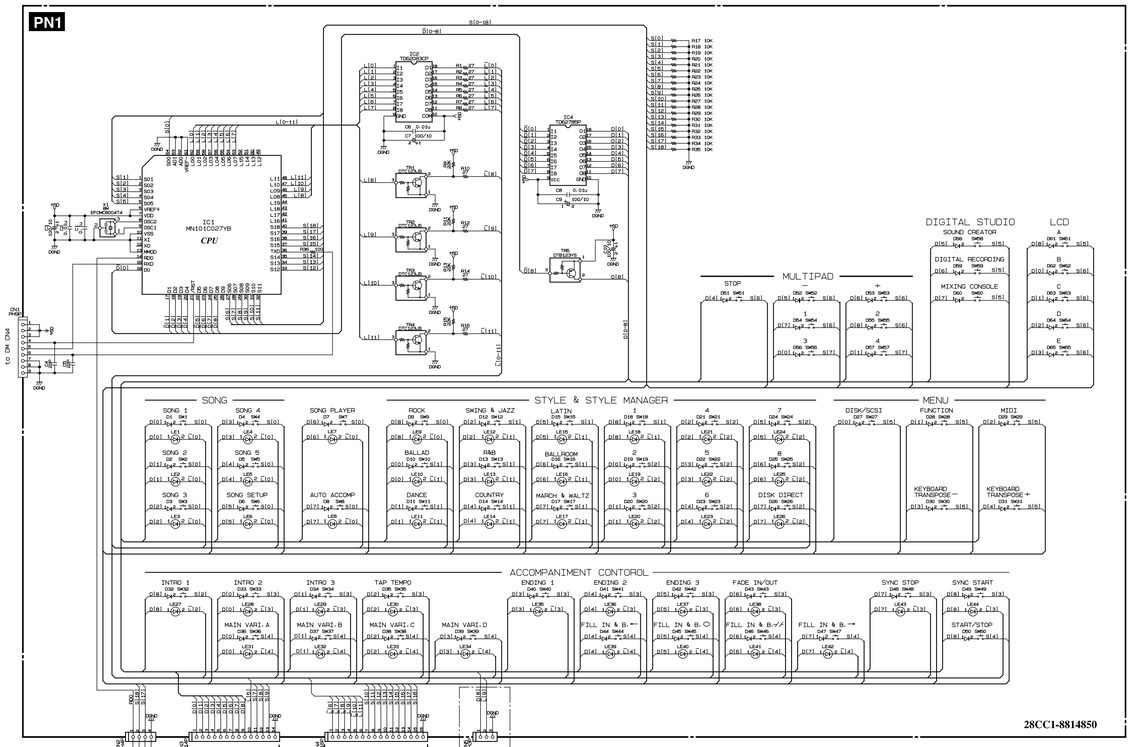

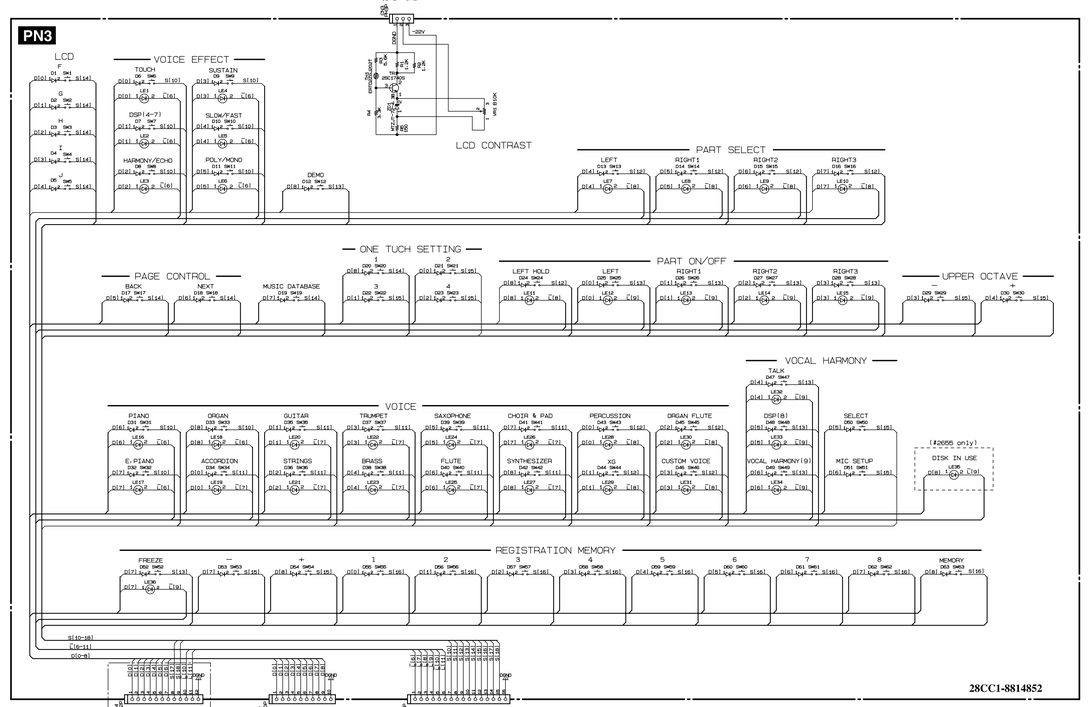

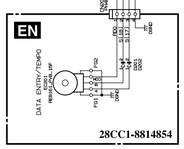

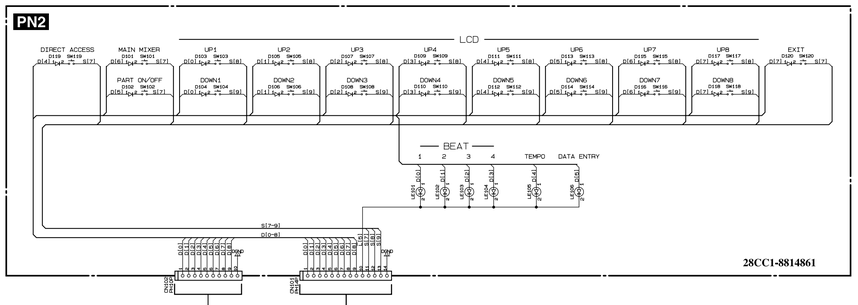

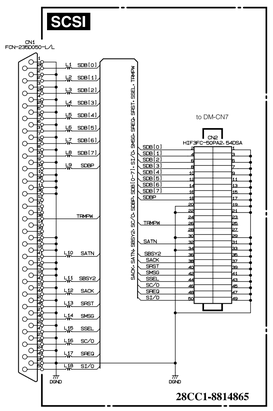

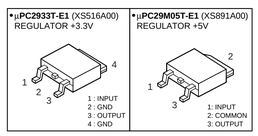

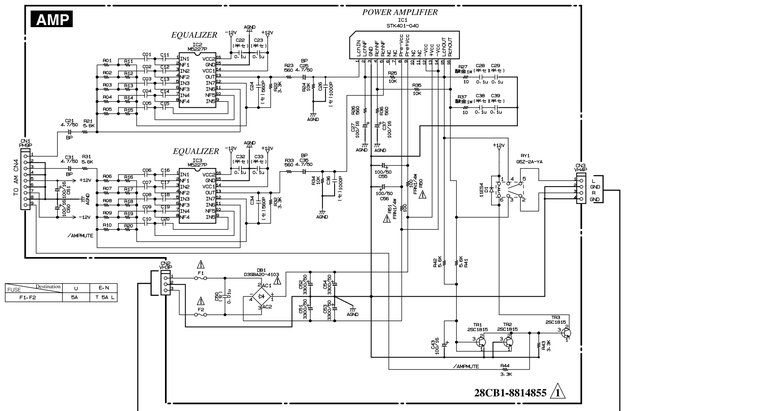

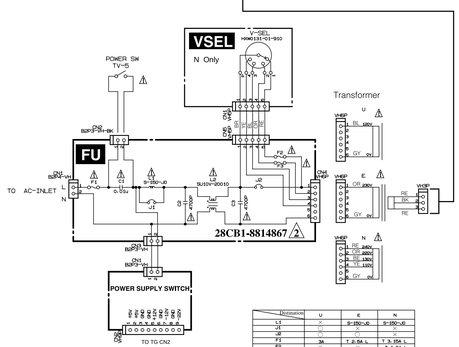

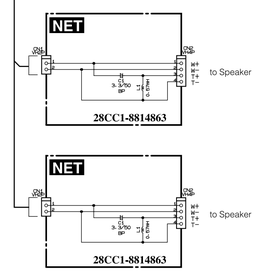

(マ) : Mylar Capacitor

(セ) : Ceramic Capacitor

(半セ): Semiconductive Cera. Cap.

酸金 : Metal Oxide Film Resistor

■ To SERVICE PERSONNEL

Circuit Components Information

Components having special characteristics are marked ⚠ and must be replaced with parts having specifications equal to those originally installed.

Note: See parts list for details of circuit board component parts.