PORTATONE

PSR-550

SERVICE MANUAL



■ **CONTENTS**

SPECIFICATIONS 3
PANEL LAYOUT 4
CIRCUIT BOARD LAYOUT & WIRING 6
BLOCK DIAGRAM 8
DISASSEMBLY PROCEDURE 9
LSI PIN DESCRIPTION 13
IC BLOCK DIAGRAM 18
CIRCUIT BOARDS 19
TEST PROGRAM 28
DATA BACKUP & INITIALIZATION 32
ALERT MESSAGE LIST 33
MIDI IMPLEMENTATION CHART 35
OVERALL CIRCUIT DIAGRAM
PARTS LIST

This document is printed on chlorine free (ECF) paper with soy ink.

PK 001654

YAMAHA
HAMAMATSU, JAPAN
1.412K-667 I·T Printed in Japan '01.05

IMPORTANT NOTICE

This manual has been provided for the use of authorized Yamaha Retailers and their service personnel. It has been assumed that basic service procedures inherent to the industry, and more specifically Yamaha Products, are already known and understood by the users, and have therefore not been restated.

WARNING : Failure to follow appropriate service and safety procedures when servicing this product may result in personal injury, destruction of expensive components and failure of the product to perform as specified. For these reasons, we advise all Yamaha product owners that all service required should be performed by an authorized Yamaha Retailer or the appointed service representative.

IMPORTANT : This presentation or sale of this manual to any individual or firm does not constitute authoriza-tion, certification, recognition of any applicable technical capabilities, or establish a principal-agent relationship of any form.

The data provided is believed to be accurate and applicable to the unit (s) indicated on the cover. The research engineering, and service departments of Yamaha are continually striving to improve Yamaha products. Modifications are, therefor, inevitable and changes in specification are subject to change without notice or obligation to retrofit. Should any discrepancy appear to exist, please contact the distributor's Service Division.

WARNING : Static discharges can destroy expensive components. Discharge any static electricity your body may have accumulated by grounding yourself to the ground bus in the unit (heavy gauge black wires connect to this bus).

IMPORTANT : Turn the unit OFF during disassembly and parts replacement. Recheck all work before you apply power to the unit.

WARNING : CHEMICAL CONTENT NOTICE !

The solder used in the production of this product contains LEAD. In addition, other electrical/electronic and/or plastic (where applicable) components may also contain traces of chemicals found by the California Health and Welfare Agency (and possibly other entities) to cause cancer and/or birth defects or other reproductive harm.

DO NOT PLACE SOLDER, ELECTRICAL/ELECTRONIC OR PLASTIC COMPONENTS IN YOUR MOUTH FOR ANY REASON WHAT SO EVER!

Avoid prolonged, unprotected contact between solder and your skin! When soldering, do not inhale solder fumes or expose eyes to solder/flux vapor!

If you come in contact with solder or components located inside the enclosure of this product, wash your hands before handling food.

■ WARNING

Components having special characteristics are marked ⚠ and must be replaced with parts having specification equal to those originally installed.

■ SPECIFICATIONS

Keyboards
- 61 standard-size keys (C1 — C6) with touch response.

Display
- Large multi-function LCD display

Setup
- STANDBY/ON
- Master Volume : MIN — MAX

Demo
- 9 Songs

Realtime Controls
- Pitch Bend wheel

Control & Number Buttons
- SONG
- STYLE
- MUSIC DATABASE
- VOICE L
- VOICE R1
- VOICE R2
- VOICE CHANGE
- MIXER
- NEXT/BACK
- DIRECT ACCESS
- EXIT
- Data dial, [1] — [0], [+/YES], [-/NO]

Overall Controls
- Tempo : 32 — 280
- Transpose

Voice
- 219 Panel Voices +14 Drum Kits + 480 XG Voices
- Polyphony : 32
- Voice Set
- R1/R2/L Voices
- Part on/off (R1/R2/L)
- Voice Change : Voice number
- Mixer : Volume, Octave, Pan, Reverb Depth, Chorus Depth, DSP Depth

Auto Accompaniment
- 112 Styles
- Accompaniment Track : RHYTHM SUB/ MAIN, BASS, CHORD 1/2, PAD, PHRASE1/2
- Accompaniment Track Settings : ON/OFF
- Accompaniment Control : ACMP ON/OFF, SYNC START, SYNC STOP, START/STOP, INTRO, MAIN A/B (AUTO FILL), ENDING/ rit
- Beat Indicator
- Accompaniment Volume
- Voice Change : Voice number
- Mixer : Volume, Pan, Reverb depth, Chorus depth, DSP depth
- One Touch Setting
- Fingering Mode : Multi Finger/Single Finger/Fingered 1/ Fingered 2/Full Keyboard

Music Database
- 220

Multi Pads
- 40 Multi Pad Banks
- 4 Pads + STOP
- Chord Match
- Naming

Digital Effects
- Reverb : 24 types
- Chorus : 16 types
- DSP (system/insertion) : 74 types
- Harmony/Echo : 22 types

Registration Memory
- 32 Registration Banks : 1 — 4
- Naming
- Accompaniment Freeze

Disk Operations
- Song playback/recording
- Load (Style/Multi Pad/Registration Memory)
- Save (Style/Multi Pad/Registration Memory)
- Utility : Format, Song Copy, Delete File

Song
- Song Volume
- Song Track Settings : ON/OFF
- Repeat Play
- Song Transpose

Song Recording
- Quick Record, Multi Record
- Recording Tracks : 1 — 16
- Punch In/Punch Out
- Quantize
- Naming
- Clear
- Setup Data : Volume, Octave, Pan, Reverb depth, Chorus depth, DSP depth

Multi Pad Recording
- User Pad Bank : 4 (41 — 44)
- Naming
- Clear
- Chord Match

Style Recording
- User Styles : 3 (113 — 115)
- Recording Tracks : 6 Sections x 8 tracks
- Drum Cancel
- Quantize
- Naming
- Clear

MIDI
- Transmit settings
- Receive settings
- Local Control
- Clock
- Initial Data Send
- MIDI template

Other functions
- Metronome
- Upper Octave
- Master Tuning
- Scale Tuning
- Split Point
- Touch Sensitivity
- Voice Set
- Footswitch function
- Pitch Bend Range

Auxiliary Jacks
- DC IN 10-12V, PHONES/OUTPUT, SUSTAIN, MIDI IN/OUT, TO HOST

Amplifiers
- 6W + 6W (when using PA-6 power adaptor)
- 4.5W + 4.5W (when using batteries)

Speakers
- 12 cm (4-3/4") x 2, 3 cm (1-3/16") x 2

Power Consumption
- 22W (when using PA-6 power adaptor)

Power Supply
- Adaptor : Yamaha PA-6 AC power adaptor
  Rated Voltage DC 10-12V
  Rated Current 2A
- Batteries : Six “D” size, R20P (LR20) or equivalent batteries

Dimensions (W x D x H)
- 952 x 387 x 169 (mm)
  (37-1/2" x 15-1/4" x 6-5/8")

Weight
- 8.7 Kg (19.2 lbs.) excluding batteries

Supplied Accessories
- Data Disk
- Music Stand
- Owner’s Manual

Optional Accessories
- Headphones : HPE-150
- AC Power Adaptor : PA-6
- Foot Switch : FC4, FC5
- Keyboard Stand : L-6, L-7

■ PANEL LAYOUT

● Top Panel

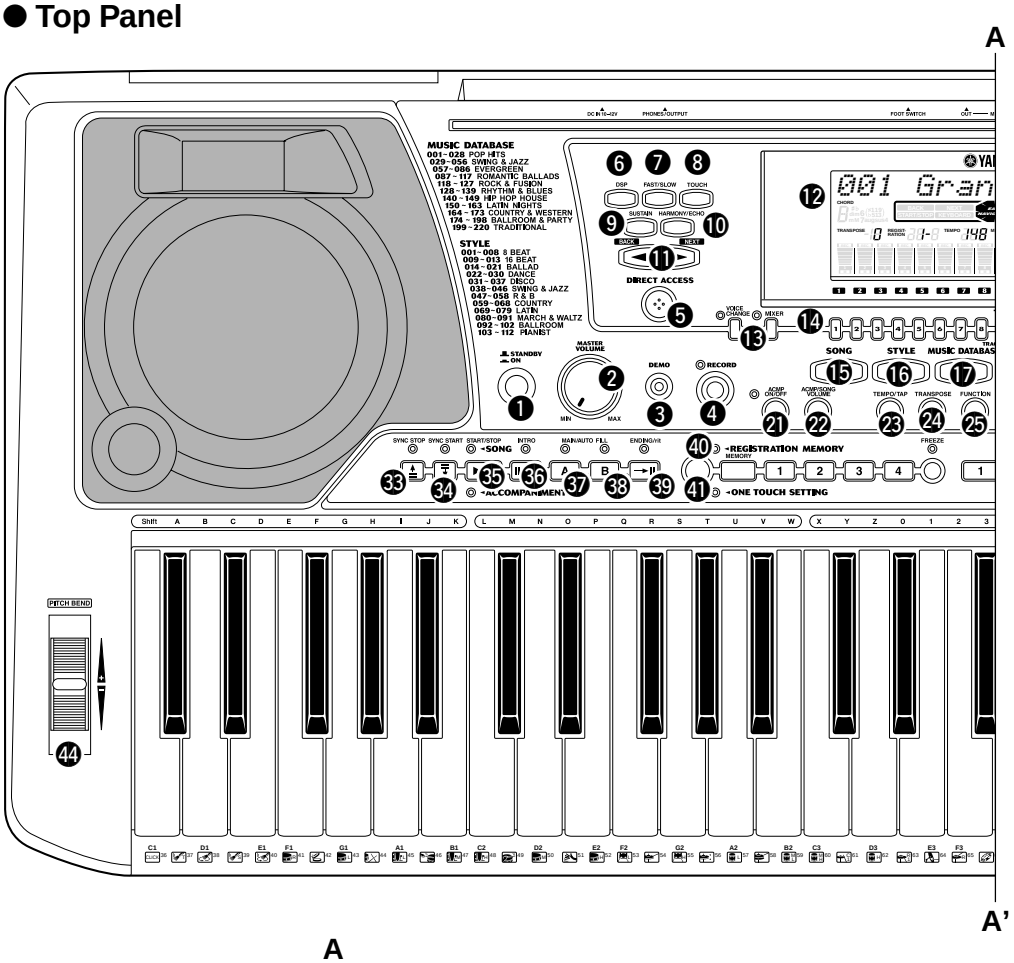

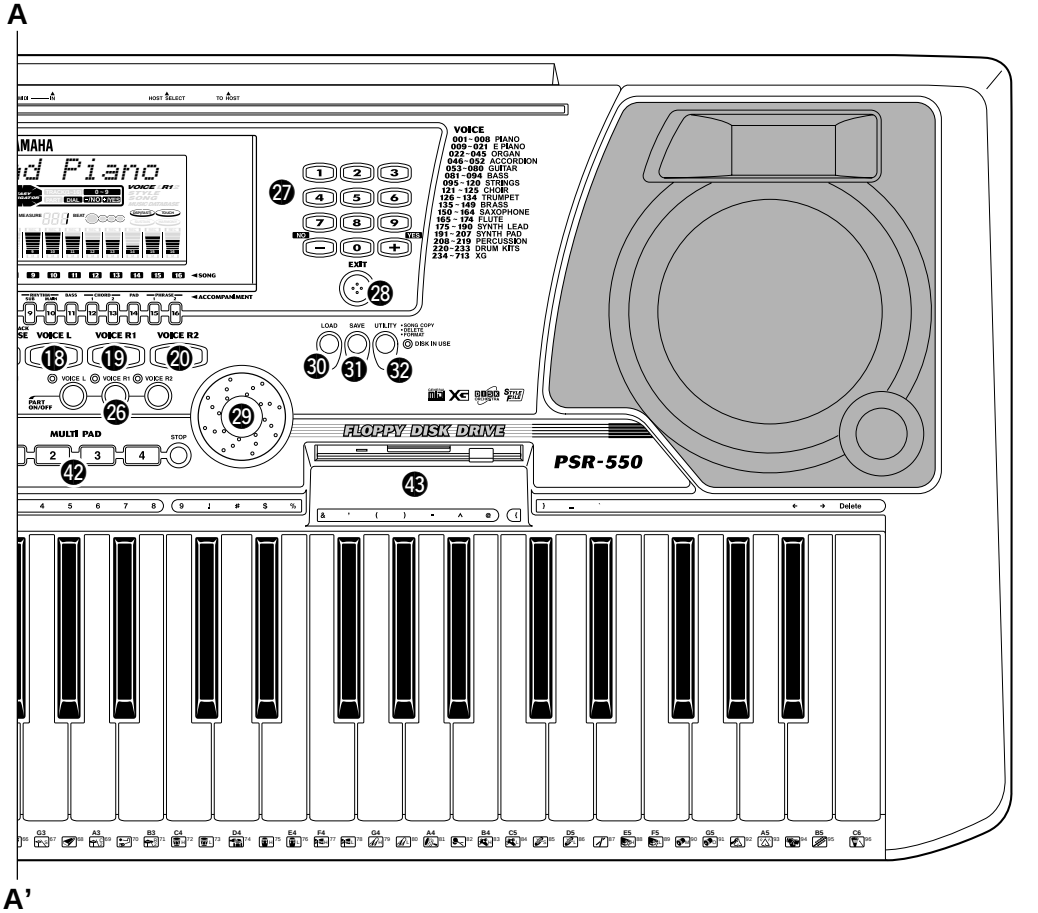

❶ Power switch ([STANDBY/ON])
❷ [MASTER VOLUME] dial
❸ [DEMO] button
❹ [RECORD] button
❺ [DIRECT ACCESS] button
❻ [DSP] button
❼ [FAST/SLOW] button
❽ [TOUCH] button
❾ [SUSTAIN] button
❿ [HARMONY/ECHO] button
⓫ [BACK] button, [NEXT] button
⓬ LCD display
⓭ [VOICE CHANGE] button, [MIXER] button
⓮ [TRACK 1–16] buttons
⓯ [SONG] button
⓰ [STYLE] button
⓱ [MUSIC DATABASE] button
⓲ [VOICE L] button
⓳ [VOICE R1] button
⓴ [VOICE R2] button
㉑ [ACMP ON/OFF] button
㉒ [ACMP/SONG VOLUME] button
㉓ [TEMPO/TAP] button
㉔ [TRANSPOSE] button
㉕ [FUNCTION] button
㉖ [PART ON/OFF]
  • [VOICE L] button
  • [VOICE R1] button
  • [VOICE R2] button
㉗ Number buttons [1]–[0], [–/NO], [+/YES]
㉘ [EXIT] button
㉙ Data dial
㉚ [DISK LOAD] button
㉛ [DISK SAVE] button
㉜ [DISK UTILITY] button
㉝ [SYNC STOP] button
㉞ [SYNC START] button
㉟ [START/STOP] button
㊱ [INTRO] button
㊲ [MAIN/AUTO FILL A] button
㊳ [MAIN/AUTO FILL B] button
㊴ [ENDING/rit.] button
㊵ [REGISTRATION MEMORY] buttons
㊶ [ONE TOUCH SETTING] buttons
㊷ [MULTI PAD] buttons
㊸ Disk Drive
㊹ [PITCH BEND] wheel

● Rear Panel

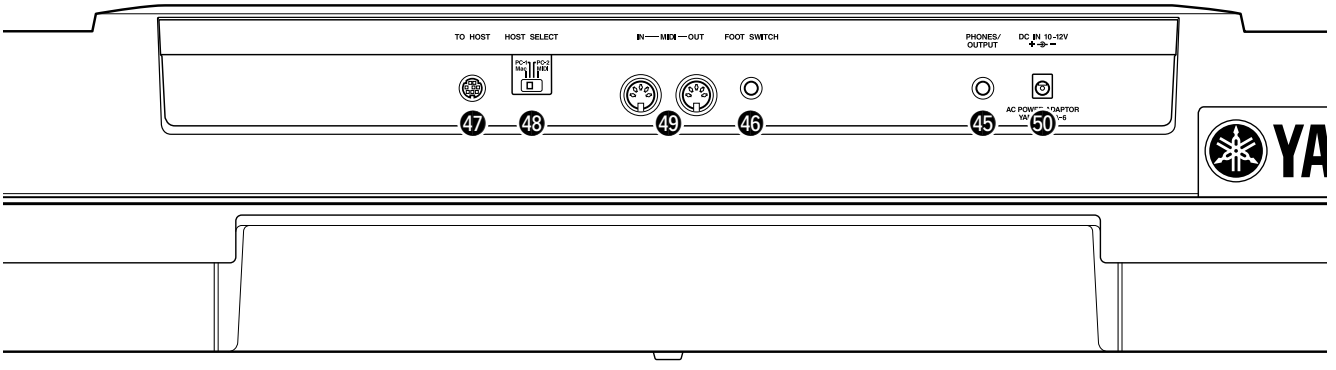

㊺ [PHONES/OUTPUT] jack
㊻ [FOOT SWITCH] jack
㊼ [TO HOST] connector
㊽ [HOST SELECT] switch
㊾ [MIDI IN], [MIDI OUT] connectors
㊿ [DC IN 10–12V] jack

■ CIRCUIT BOARD LAYOUT & WIRING

● Lower case side

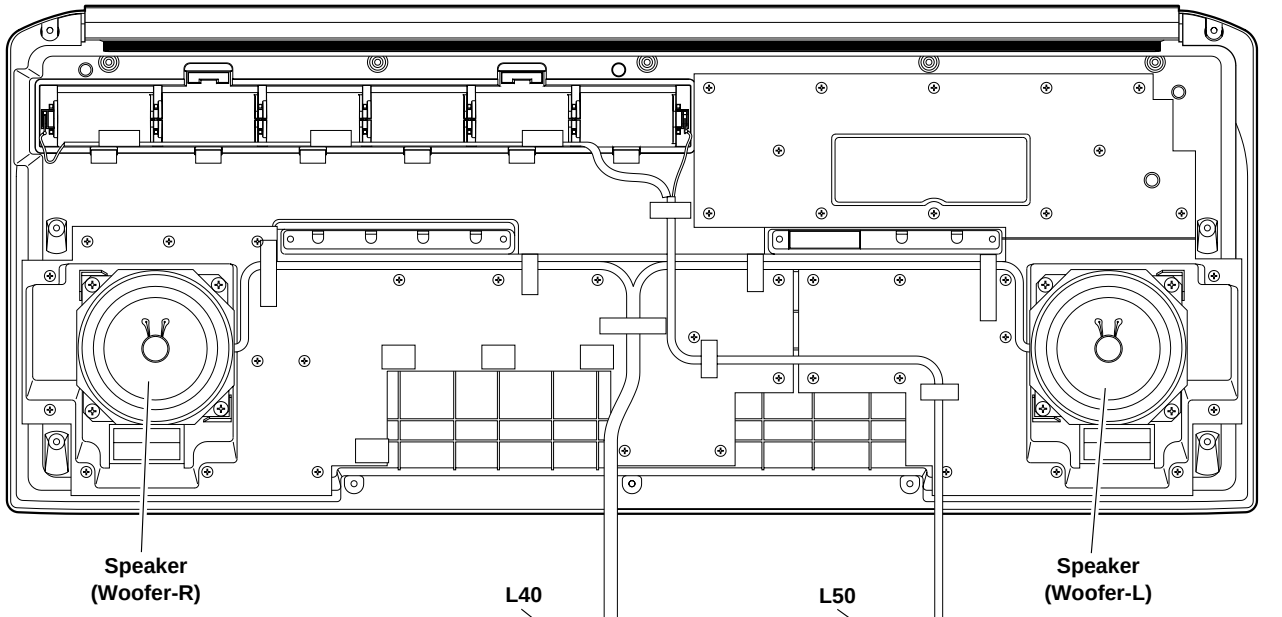

● Upper case side

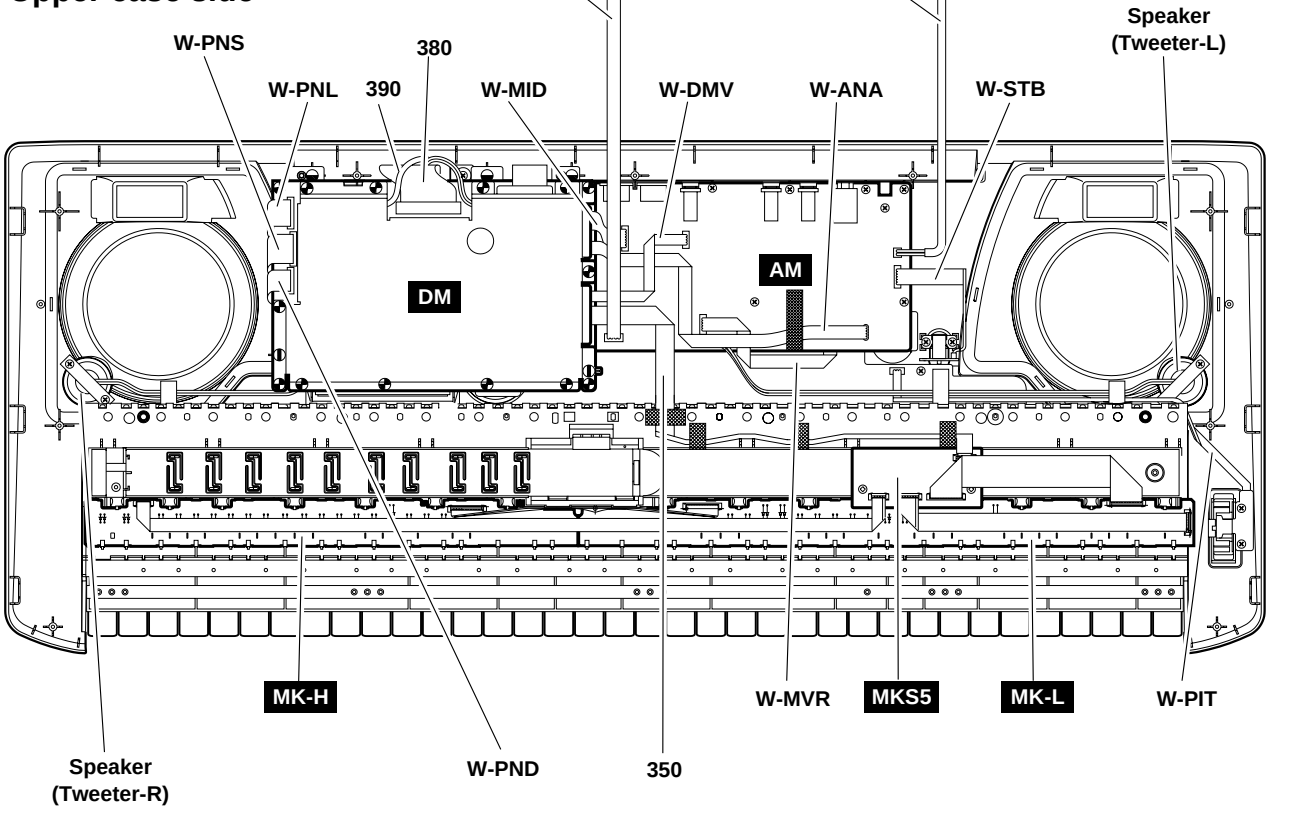

Caution : Be sure to attach the removed filament tape just as it was before removal.

● Upper case side

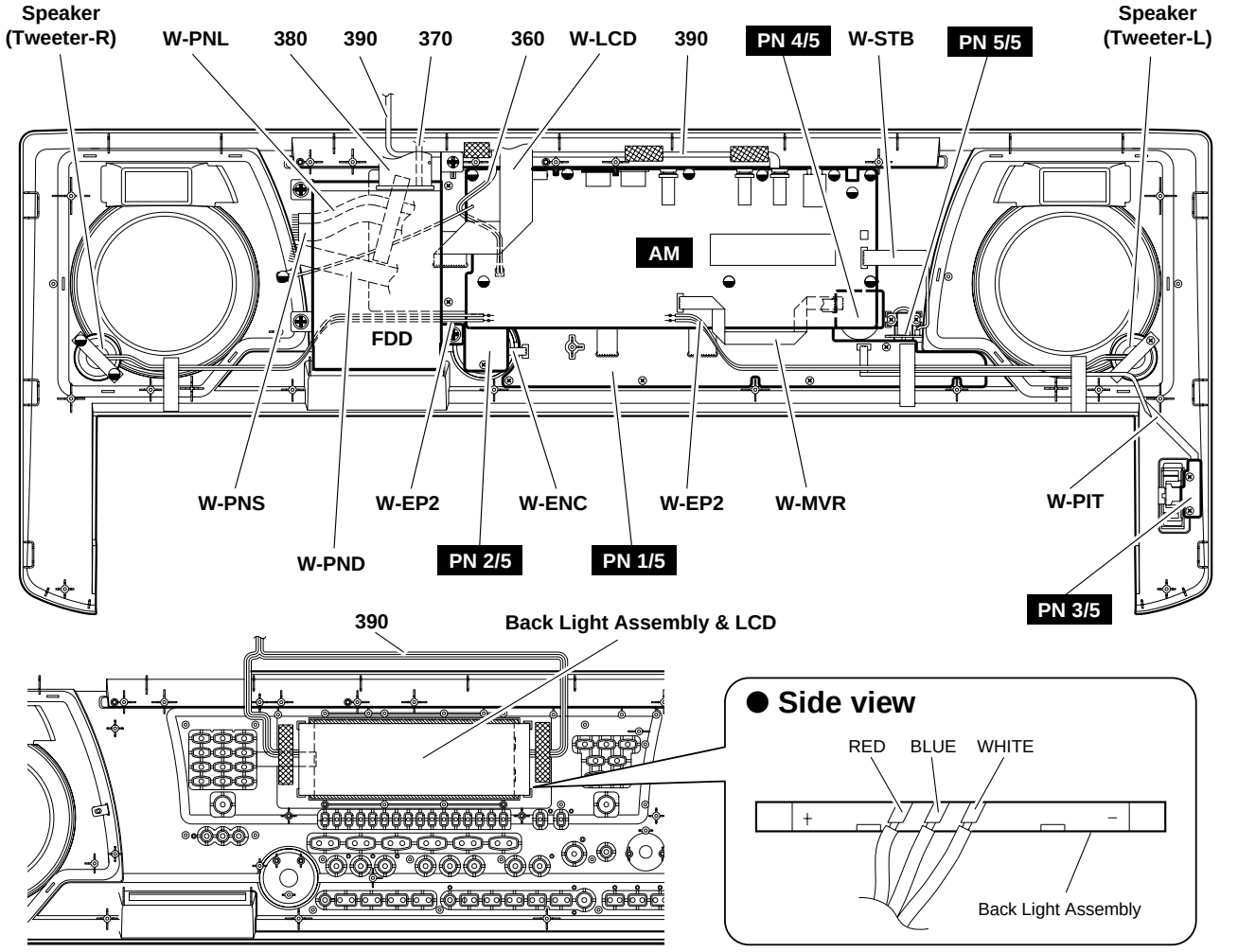

Location	Part No.	Connector Assembly	Destination				Remarks	
350	–	MKB	MKS5-CN1 *2	*1	DM-CN180 *2	*1	6P	(V381860)
360	–	LCV	DM-CN960	*1	PN 1/5-CN102	*1	2P	(V381920)
370	V4468500	FDV	DM-CN950	*1	FDD-CN2	*1	3P	
380	V3819400	FDD	DM-CN850	*1	FDD-CN1	*1	34P	
390	–	BLT	DM-CN999	*1	Back Light		6P	(V705780)
L40	–	SPW	AM-CN480	*1	Speaker (Wo)		4P	(V381950)
L50	–	BAT	AM-CN510	*1	Battery		2P	(V705790)
W-ANA	–	ANA	AM-CN100		DM-CN250	*1	4P	(V381820)
W-DMV	–	DMV	AM-CN530		DM-CN920	*1	5P	(V381840)
W-EP2	–	EP2	AM-J411,J412		Speaker (Tw-L)		L=160	(V457700)
W-EP2	–	EP2	AM-J421,J422		Speaker (Tw-R)		L=160	(V457700)
W-MID	–	MID	AM-CN800		DM-CN170	*1	7P	(V381870)
W-ENC	–	ENC	PN 2/5-CN602		PN 1/5-CN502	*1	3P	(V381800)
W-LCD	–	LCD	PN 1/5-CN101		DM-CN750	*1	12P	(V445890)
W-MVR	–	MVR	PN 4/5-CN801		AM-CN390	*1	5P	(V381830)
W-PIT	–	PIT	PN 3/5-CN603		PN 1/5-CN503	*1	3P	(V381810)
W-PND	–	PND	PN 1/5-CN301		DM-CN650	*1	8P	(V381880)
W-PNL	–	PNL	PN 1/5-CN501		DM-CN550	*1	10P	(V381890)
W-PNS	–	PNS	PN 1/5-CN401		DM-CN150	*1	11P	(V381900)
W-STB	–	STB	PN 5/5-CN701		AM-CN520	*1	6P	(V381850)

* The parts with "**–**" in "**Part No**." are not available as spare parts.
* 1 : Edge mark is adjusted to Pin 1 mark (△mark).
* 2 : Be sure to make a correct match when connecting MKS5 (CN1) and DM (CN180).
Connecting the connectors in the wrong way around may cause damage to the MKS5 circuit board.

■ BLOCK DIAGRAM

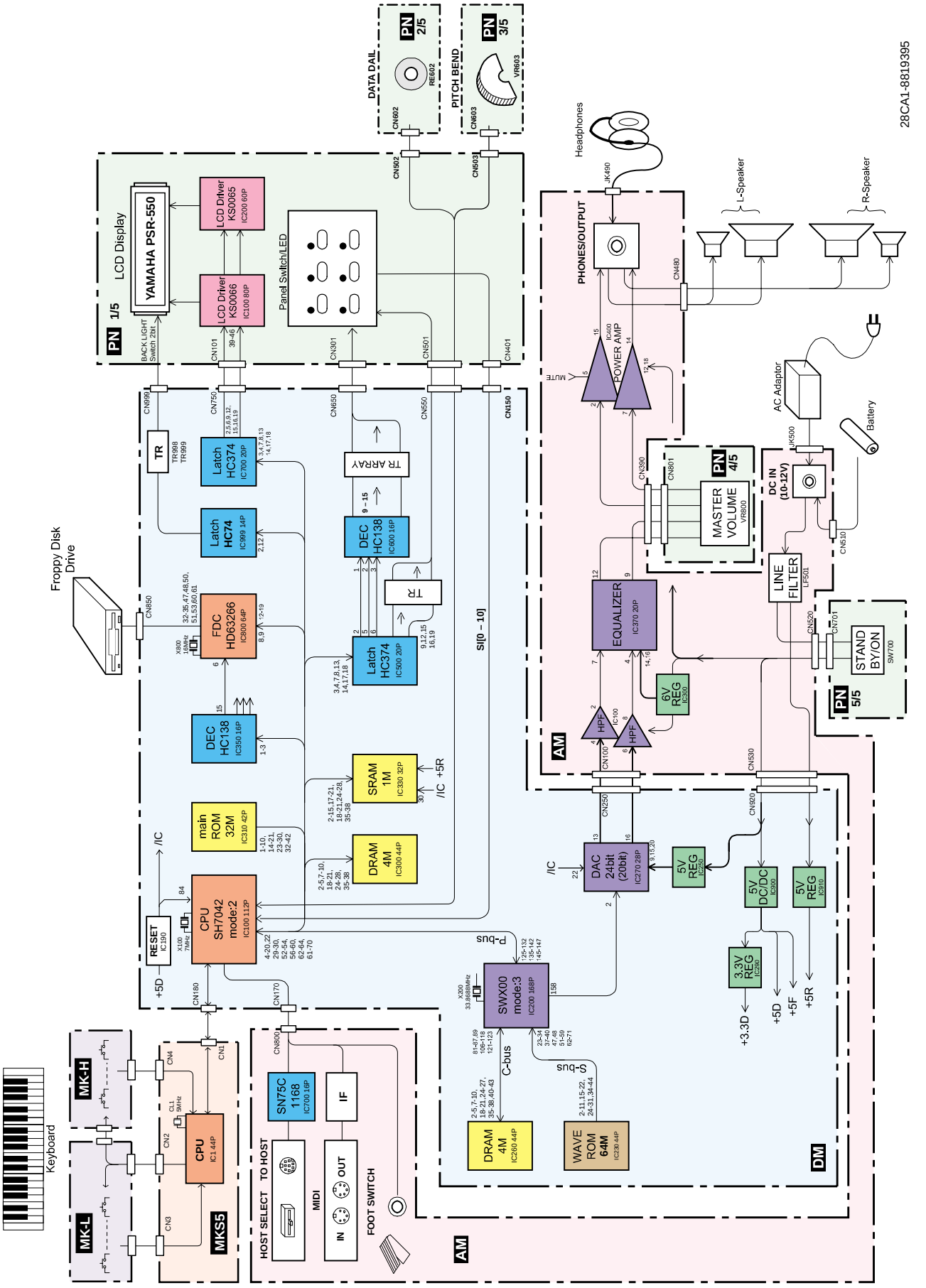

■ DISASSEMBLY PROCEDURE

1. Lower Case Assembly

(Time required : About 5 min.)

1-1. Remove the fourteen (14) screws marked [430A] and the four (4) screws marked [440A]. The lower case assembly can then be removed. (Fig. 1)

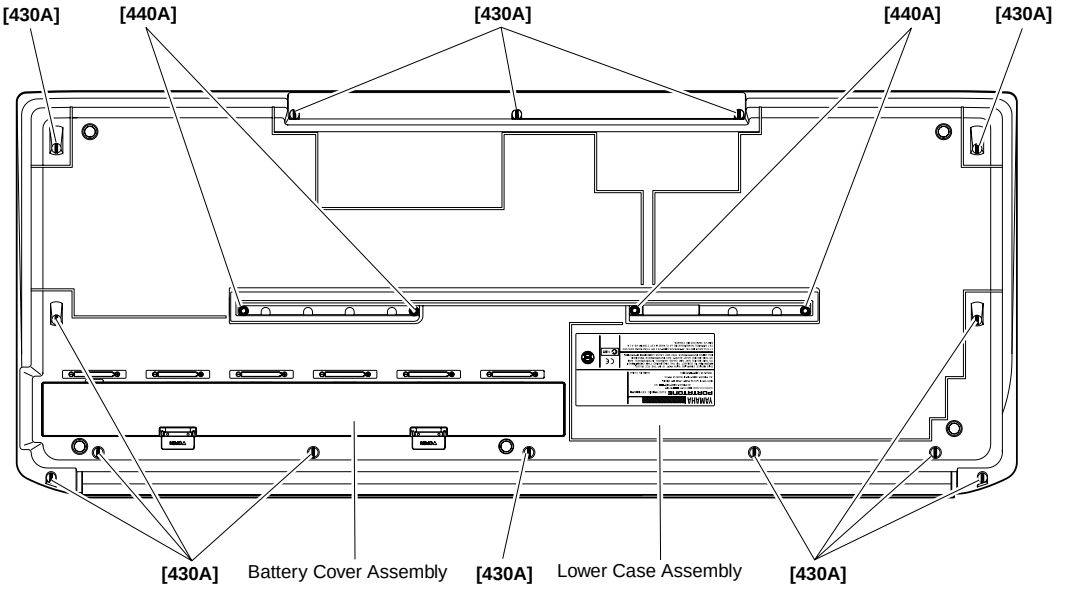

[430A] : Bind Head Tapping Screw-P 3.0X12 MFZN2Y (EP600300)
[440A] : Bind Head Tapping Screw-P 3.0X25 MFZN2Y (VK228100)

(Fig.1)

2. Spring Terminal

(Time required : About 10 min.)

2-1. Remove the lower case assembly. (See procedure 1)
2-2. Remove the BAT connector assembly (red/black) soldered to the spring terminal (+)/(-). (Fig. 2)
2-3. Remove the battery cover assembly. (Fig. 1)
2-4. Remove the spring terminal by releasing hooks (2 locations for each). (Fig. 3)

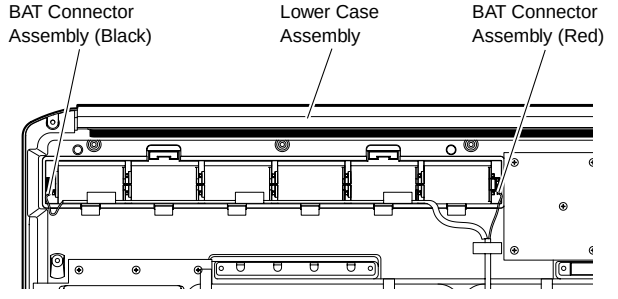

(Fig.2)

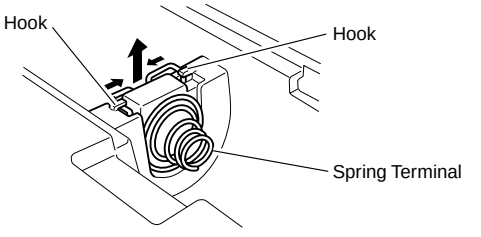

(Fig.3)

3. DM Circuit Board, Shield Box U and L

(Time required : About 10 min.)

3-1. Remove the lower case assembly. (See procedure 1)
3-2. Remove the two (2) screws marked [430B] and the fourteen (14) screws marked [450]. The shield box U and the DM circuit board can then be removed. (Fig. 4)
3-3. Remove the three (3) screws marked [420A]. The shield box L can then be removed. (Fig. 4)

4. Floppy Disk Drive Assembly

(Time required : About 10 min.)

4-1. Remove the lower case assembly. (See procedure 1)
4-2. Remove the DM circuit board and the shield box U and L. (See procedure 3)
4-3. Remove the four (4) screws marked [460]. The floppy disk assembly can then be removed. (Fig. 5)

5. AM Circuit Board

(Time required : About 15 min.)

5-1. Remove the lower case assembly. (See procedure 1)
5-2. Remove the DM circuit board and the shield box U and L. (See procedure 3)
5-3. Remove the eleven (11) screws marked [420B]. The AM circuit board can then be removed. (Fig. 5)

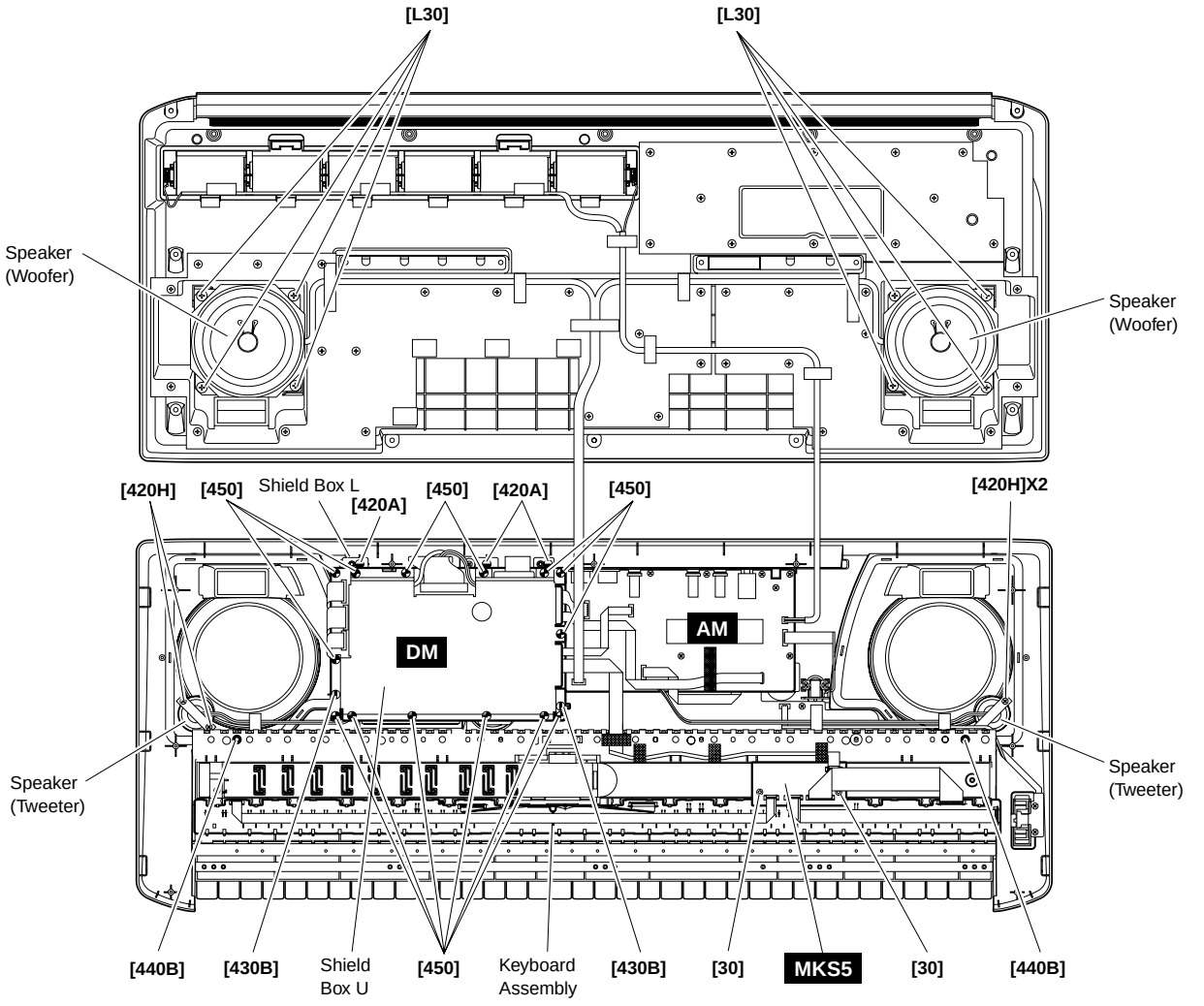

[30] :	Bind Head Tapping Screw-P	3.0X8	MFZN2Y	(EP600280)
[420] :	Bind Head Tapping Screw-P	3.0X8	MFZN2Y	(EP600280)
[430B] :	Bind Head Tapping Screw-P	3.0X12	MFZN2Y	(EP600300)
[440B] :	Bind Head Tapping Screw-P	3.0X25	MFZN2Y	(VK228100)
[450] :	Bind Head Tapping Screw-B	3.0X8	MFZN2Y	(EP600250)
[L30] :	Bind Head Tapping Screw-P	4.0X8	MFZN2BL	(VB931600)

(Fig.4)

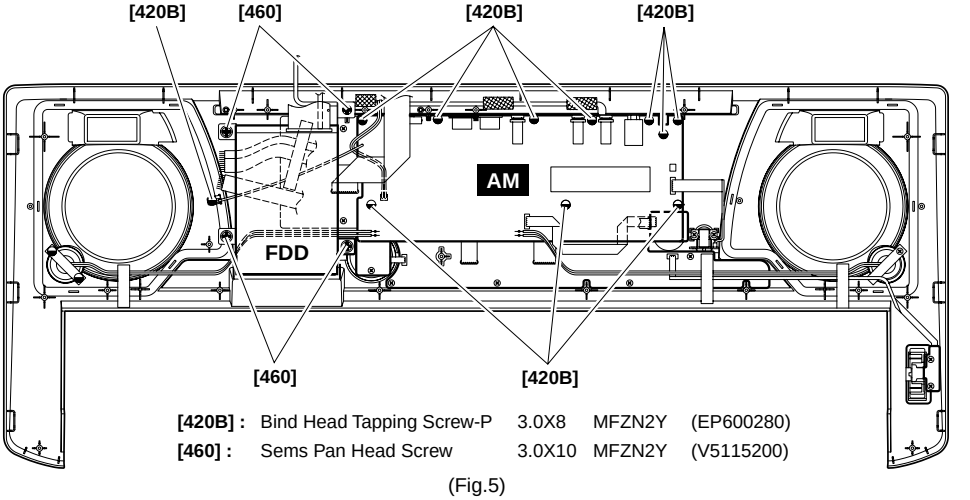

[420B] :	Bind Head Tapping Screw-P	3.0X8	MFZN2Y	(EP600280)
[460] :	Sems Pan Head Screw	3.0X10	MFZN2Y	(V5115200)

(Fig.5)

6. PN 4/5 Circuit Board

(Time required : About 15 min.)

6-1. Remove the lower case assembly. (See procedure 1)
6-2. Remove the DM circuit board and the shild box U and L. (See procedure 3)
6-3. Remove the AM circuit board. (See procedure 5)
6-4. Remove the volume knob from the control panel side. (Fig. 7)
6-5. Remove the three (3) screws marked [420C]. The PN 4/5 circuit board can then be removed. (Fig. 6)

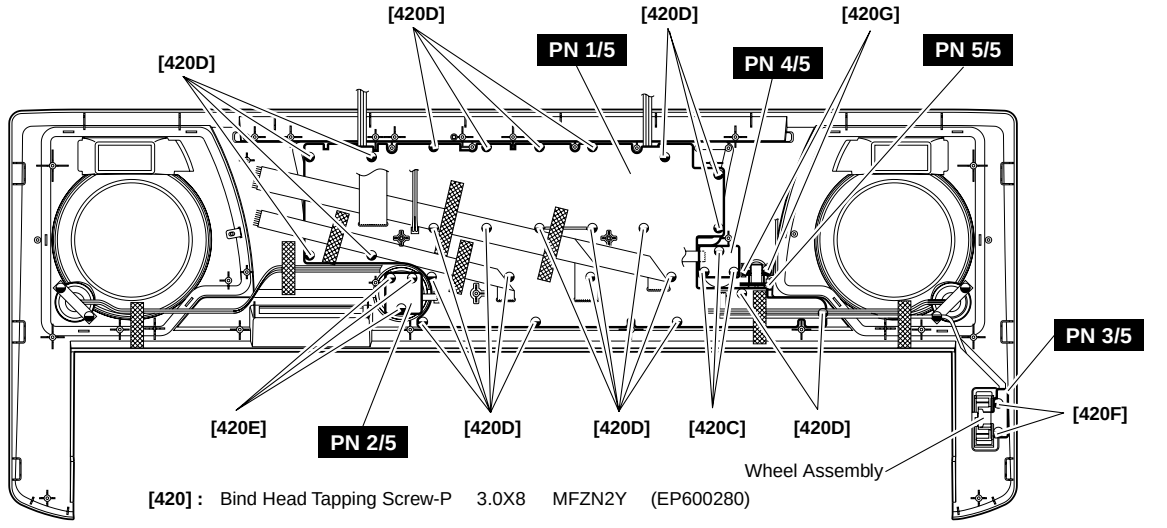

(Fig.6)

7. PN 1/5 Circuit Board

(Time required : About 20 min.)

7-1. Remove the lower case assembly. (See procedure 1)
7-2. Remove the DM circuit board and the shield box U and L. (See procedure 3)
7-3. Remove the floppy disk drive assembly. (See procedure 4)
7-4. Remove the AM circuit board. (See procedure 5)
7-5. Remove the PN 4/5 circuit board. (See procedure 6)
7-6. Remove the twenty-five (25) screws marked [420D]. The PN 1/5 circuit board can then be removed. (Fig. 6)

8. PN 2/5 Circuit Board

(Time required : About 15 min.)

8-1. Remove the lower case assembly. (See procedure 1)
8-2. Remove the DM circuit board and the shield box U and L. (See procedure 3)
8-3. Remove the AM circuit board. (See procedure 5)
8-4. Remove the encoder knob from the control panel side. (Fig. 8)
8-5. Remove the three (3) screws marked [420E]. The PN 2/5 circuit board can then be removed. (Fig. 6)

9. PN 3/5 Circuit Board

(Time required : About 5 min.)

9-1. Remove the lower case assembly. (See procedure 1)
9-2. Remove the two (2) screws marked [420F]. The PN 3/5 circuit board can then be removed with the wheel assembly. (Fig. 6)

10. PN 5/5 Circuit Board

(Time required : About 5 min.)

10-1. Remove the lower case assembly. (See procedure 1)
10-2. Remove the two (2) screws marked [420G]. The PN 5/5 circuit board can then be removed. (Fig. 6)

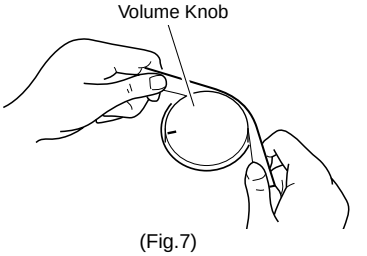

(Fig.7)

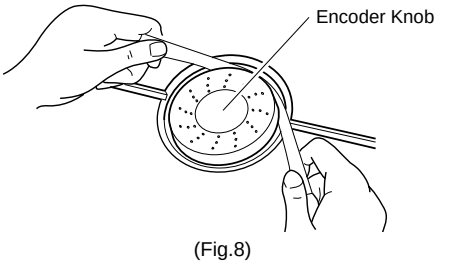

(Fig.8)

11. Keyboard Assembly

(Time required : About 10 min.)

11-1. Remove the lower case assembly. (See procedure 1)

11-2. Remove the two (2) screws marked [440B]. The keyboard assembly can then be removed. (Fig. 4)

12. Speakers (Time required : About 10 min.)

12-1. Remove the lower case assembly. (See procedure 1)

12-2. Remove the right and left (woofer) speakers by removing four (4) screws marked [L30] from each speaker. (Fig. 4)

12-3. Remove the right and left (tweeter) speakers by removing two (2) screws marked [420H] from each speaker. (Fig. 4)

13. LCD and Back Light Assembly

(Time required : About 20 min.)

13-1. Remove the lower case assembly. (See procedure 1)

13-2. Remove the DM circuit board and the shield box U and L. (See procedure 3)

13-3. Remove the floppy disk drive assembly. (See procedure 4)

13-4. Remove the AM circuit board. (See procedure 5)

13-5. Remove the PN 1/5 circuit board. (See procedure 6)

13-6. The LCD can then be removed with the back light assembly. (Fig. 9)

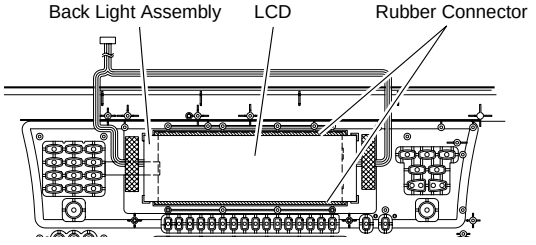

(Fig.9)

14. Disassembling the Keyboard Assembly

14-1 Remove the keyboard assembly. (See procedure 11.)

14-2 Remove the two (2) screws marked [30]. The MKS5 circuit board can then be removed. (Fig. 4)

14-3 Remove the MK-L and MK-H circuit boards while pressing the fifteen (15) hooks A inward, and then remove the rubber contact. (Fig. 10)

14-4 Remove the twenty-one (21) screws marked [140], then remove the black keys from the lower notes. Afterwards, remove the white keys DFA and C' and then remove the white keys CEGB from the higher notes. At this time, lift the keys from the front and slide them towards you. the keys can then be removed from the assembly. (Fig. 11)

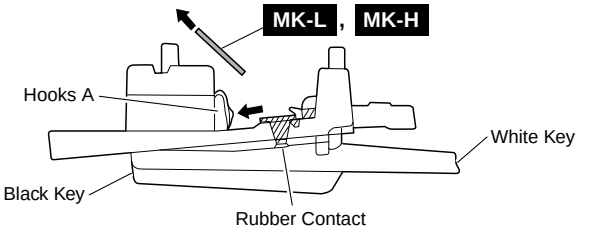

(Fig.10)

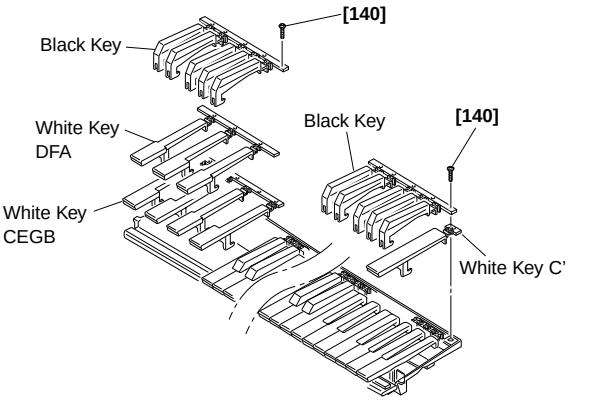

[140] : Bind Head Tapping Screw-P 3.0X16 MFZN2Y (EP600310)

(Fig.11)

15. Assembling the Keyboard Assembly

15-1 Install the white keys CEGB from the lower notes, and then install the DFA keys and C' key. Afterwards install the black keys from the higher notes, and tighten the twenty-one (21) screws marked [140]. (Fig. 11)

15-2 Install the rubber contacts in the assembly while pressing the keys as shown in Figure 12. Check that the rubber contact has been firmly placed into position in the area indicated by the arrow in Figure 13. When fitting the rubber contacts, raise both ends of the frame so that keys do not push the rubber contact up.

15-3 Install the MK-L and MK-H circuit boards in the assembly so that the hooks B hold it as shown in Figure 14.

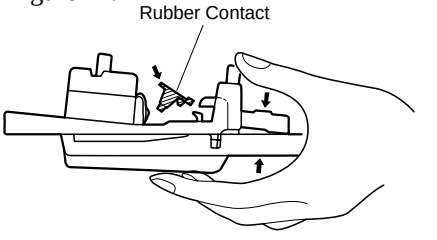

(Fig.12)

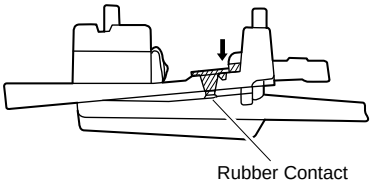

(Fig.13)

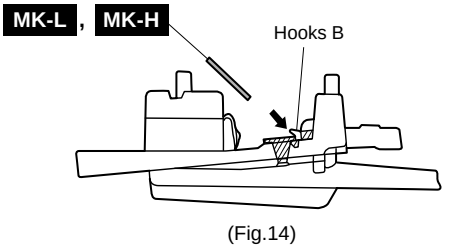

(Fig.14)

■ LSI PIN DESCRIPTION

μ**PD789022GB-A15-8E** (XZ560100) **CPU** 13

HD6437042AF90F (XZ787100) **CPU** 14

HG73C205AFD (XU947C00) **SWX00B** (Tone Generator) 15

HD63266F (XI939A00) **FDC** (Floppy Disk Controller) 16

S6A0065B01-Q0RJ (XV993A00) **LCD DRIVER** 16

S6A0069X10-Q0RJ (XV226A00) **LCD DRIVER** 17

PCM1716E (XU829A00) **DAC** (Digital to Analog Converter) 13

● μ**PD789022GB-A15-8E** (XZ560100) **CPU**

MKS5 : IC1

PIN NO.	NAME	I/O	FUNCTION	PIN NO.	NAME	I/O	FUNCTION
1	P12	I/O	Port 1	23	P32/INTP2/CPT2	I/O	Port 3/External interrupt input/Capture edge input
2	P11	I/O		24	P31/INTP1	I/O	Port 3/External interrupt input
3	P10	I/O		25	P30/INTP0	I/O	
4	P47/KR7	I/O	Port 4/Key return signal detection input	26	P22/RXD/SI0	I/O	Port 2/Asynchronous serial interface serial data input/Serial interface serial data input
5	P46/KR6	I/O		27	P21/TXD/SO0	I/O	Port 2/Asynchronous serial interface serial data output/Serial interface serial data output
6	P45/KR5	I/O		28	P20/ASCK/SCK0	I/O	Port 2/Asynchronous serial interface serial clock input/Serial interface serial clock
7	P44/KR4	I/O		29	P07	I/O	Port 0
8	P43/KR3	I/O		30	P06	I/O	
9	P42/KR2	I/O		31	P05	I/O	
10	P41/KR1	I/O		32	P04	I/O	
11	P40/KR0	I/O		33	P03	I/O	
12	NC			34	P02	I/O	
13	IC		Internally connected (N.C.)	35	P01	I/O	
14	X2		Clock	36	P00	I/O	
15	X1	I		37	NC		
16	VSS0		Ground	38	VDD1		Power supply
17	VDD0		Power supply	39	VSS1		Ground
18	/RESET	I	System reset	40	P17	I/O	Port 1
19	P53	I/O	Port 5	41	P16	I/O	
20	P52	I/O		42	P15	I/O	
21	P51/TO2	I/O	Port 5/16-bit timer output	43	P14	I/O	
22	P50/TI0/TO0	I/O	Port 5/External count clock input to 8-bit timer/8-bit timer output	44	P13	I/O	

● **PCM1716E** (XU829A00) **DAC** (Digital to Analog Converter)

DM : IC270

PIN NO.	NAME	I/O	FUNCTION	PIN NO.	NAME	I/O	FUNCTION
1	LRCK	I		15	Vcc1	-	Analog power supply (+5 V)
2	DATA	I	Data input	16	VOUTL	O	Lch, analog voltage output
3	BCK	I	Bit clock	17	NC	-	
4	CLKO	O	Clock input	18	EXTL	O	Lch, analog output
5	XTI	I	Clock input	19	AGND2L	-	Analog ground
6	XTO	O	Clock out	20	Vcc2L	-	Analog power supply (+5 V)
7	DGND	-	Digital ground	21	/ZERO	O	Zero data flag
8	VDD	-	Digital power supply (+5 V)	22	/RST	I	Reset
9	Vcc2R	-	Analog power supply (+5 V)	23	/CS/IWO	I	Chip select
10	AGND2R	-	Analog ground	24	MODE	I	Mode control select (H: Software, L: Hardware)
11	EXTR	O	Rch, analog output	25	/MUTE	I	Mute control
12	NC	-		26	MD/DM0	I	Mode control data/ De-emphasis select1
13	VOUTR	O	Rch, analog voltage output	27	MC/DM1	I	Mode control BCK/De-emphasis select2
14	AGND1	-	Analog ground	28	ML/IIS	I	Mode control Latch/input format select

● **HD6437042AF90F** (XZ787100) **CPU**

DM : IC100

PIN NO.	NAME	I/O	FUNCTION	PIN NO.	NAME	I/O	FUNCTION
1	TIOC4/DACK0/PE14	I/O	MTU I/O / DMA acknowledge / Port E	57	D11	I/O	Data bus
2	PE15	O	Port E	58	D10	I/O	
3	VSS	I	Ground	59	D9	I/O	
4	A0	O	Address bus	60	D8	I/O	
5	A1	O		61	VSS	I	Ground
6	A2	O		62	D7	I/O	Data bus
7	A3	O		63	D6	I/O	
8	A4	O		64	D5	I/O	
9	A5	O		65	VCC	I	Power supply
10	A6	O		66	D4	I/O	Data bus
11	A7	O		67	D3	I/O	
12	A8	O		68	D2	I/O	
13	A9	O		69	D1	I/O	
14	A10	O		70	D0	I/O	
15	A11	O		71	VSS	I	Ground
16	A12	O		72	XTAL	I	Crystal oscillator
17	A13	O		73	MD3	I	Mode control
18	A14	O		74	EXTAL	I	Crystal oscillator
19	A15	O		75	MD2	I	Mode control
20	A16	O		76	NMI	I	Non-maskable interrupt request
21	VCC	I	Power supply	77	VCC	I	Power supply
22	A17	O	Address bus	78	MD1	I	Mode control
23	VSS	I	Ground	79	MD0	I	Mode control
24	/RAS/PB2	I/O	Row address strobe / Port B	80	PLLVCC	I	PLL Power supply
25	/CASL/PB3	I/O	Column address strobe (low) / Port B	81	PLLCAP	I	PLL capacitor
26	/CASH/PB4	I/O	Column address strobe (high) / Port B	82	PLLVSS	I	PLL Ground
27	VSS	I	Ground	83	PA15 / CK	O	Port A / Clock
28	/RDWR / PB5	I/O	DRAM read / write / Port B	84	/RES	I	Power on reset
29	A18//BACK/PB6	I/O	Address bus / Bus acknowledge / Port B	85	PE0/DREQ0	I/O	Port E / DMA request
30	A19//BREQ/PB7	I/O	Address bus / Bus request / Port B	86	PE1/DRAK0	O	Port E / DMA acknowledge
31	A20/PB8	O	Address bus/ Port B	87	PE2	O	Port E
32	A21/PB9	O		88	PE3	O	
33	VSS	I	Ground	89	PE4	O	
34	/RD	O	Read	90	VSS	I	Ground
35	/WDTOVF	O	Watch dog timer overflow	91	PF0 / AN0	I	Port F / Analog input
36	/WRH/PA13	O	High write / Port A	92	PF1 / AN1	I	
37	VCC	I	Power supply	93	PF2 / AN2	I	
38	/WRL	O	Low write	94	PF3 / AN3	I	
39	VSS	I	Ground	95	PF4 / AN4	I	
40	/CS1	O	Chip select	96	PF5 / AN5	I	
41	/CS0	O	Chip select	97	AVSS	I	Analog ground
42	/IRQ3/TCLKD/PA9	I/O	Interrupt request / Timer clock/ Port A	98	PF6 / AN6	I	Port F / Analog input
43	TCLKC//IRQ2 /PA8	I/O	Timer clock / Interrupt request / Port A	99	PF7 / AN7	I	
44	/CS3	O	Chip select	100	AVCC	I	Power supply
45	/CS2	O	Chip select	101	VSS	I	Ground
46	/IRQ1/PA5/SCK1	I/O	Interrupt request / Port A / Serial clock	102	PE5	O	Port E
47	TXD1/PA4	O	Data transmission / Port A	103	VCC	I	Power supply
48	RXD1	I	Data reception	104	PE6	I/O	Port E
49	/IRQ0/PA2	I/O	Interrupt request / Port A	105	PE7	I/O	
50	TXD0	O	Data transmission	106	PE8	I/O	
51	RXD0	I	Data reception	107	PE9	O	
52	D15	I/O	Data bus	108	PE10	O	
53	D14	I/O		109	VSS	I	Ground
54	D13	I/O		110	PE11	O	Port E
55	VSS	I	Ground	111	PE12	O	
56	D12	I/O	Data bus	112	/MRES/PE13	I	Manual reset / Port E

● **HG73C205AFD** (XU947C00) **SWX00B** (Tone Generator)

DM : IC200

PIN NO.	NAME	I/O	FUNCTION	PIN NO.	NAME	I/O	FUNCTION
1	ICN	I	Initial clear	85	CMA3	O	Program address bus
2	RFCLKI	I	PLL Clock	86	CMA8	O	Program address bus
3	TM2	I	PLL Control	87	CMA2	O	Program address bus
4	AVDD_PLL		Power supply	88	CRD	O	read signal
5	AVSS_PLL		Ground	89	CMA1	O	Program address bus
6	MODE0	I	SWX dual mode	90	CUB	O	high byte effective signal
7	VCC7		Power supply	91	VCC91		Power supply
8	GND8		Ground	92	GHND92		Ground
9	XIN	I	crystal oscillator	93	CS1	O	CS signal
10	XOUT	O	crystal oscillator	94	CMA0	O	Program address bus
11	MODE1	I	SWX separate mode	95	CLB	O	low byte effective signal
12	TEST0	I	TEST pin	96	CMA12	O	Program address bus
13	TESTON	I	TEST pin	97	CMA11	O	Program address bus
14	AN0-P40	I	A/D converter	98	CMA10	O	Program address bus
15	AN1-P41	I	A/D converter	99	CMA9	O	Program address bus
16	AN2-P42	I	A/D converter	100	GND100		Ground
17	AN3-P43	I	A/D converter	101	CWE	O	write signal
18	AVDD_AN		Power supply	102	CMA16	O	Program address bus
19	AVSS_AN		Ground	103	CMA15	O	Program address bus
20	TXD0	O	for MIDI or TO-HOST	104	CMA14	O	Program address bus
21	TXD1	O	for MIDI	105	CMA13	O	Program address bus
22	EXCLK	I	Crystal oscillator	106	CMD8	I/O	Program memory Data bus
23	SMD11	I/O	Wave memory data bus	107	CMD7	I/O	Program memory Data bus
24	SMD4	I/O	Wave memory data bus	108	CMD9	I/O	Program memory Data bus
25	SMD3	I/O	Wave memory data bus	109	CMD6	I/O	Program memory Data bus
26	SMD12	I/O	Wave memory data bus	110	CMD10	I/O	Program memory Data bus
27	SMD10	I/O	Wave memory data bus	111	CMD5	I/O	Program memory Data bus
28	SMD5	I/O	Wave memory data bus	112	CMD11	I/O	Program memory Data bus
29	SMD2	I/O	Wave memory data bus	113	CMD4	I/O	Program memory Data bus
30	SMD13	I/O	Wave memory data bus	114	CMD12	I/O	Program memory Data bus
31	SMD9	I/O	Wave memory data bus	115	CMD3	I/O	Program memory Data bus
32	SMD6	I/O	Wave memory data bus	116	CMD13	I/O	Program memory Data bus
33	SMD1	I/O	Wave memory data bus	117	CMD2	I/O	Program memory Data bus
34	SMD14	I/O	Wave memory data bus	118	CMD14	I/O	Program memory Data bus
35	VCC35		Power supply	119	VCC119		Power supply
36	GND36		Ground	120	GND115		Ground
37	SMD8	I/O	Wave memory data bus	121	CMD1	I/O	Program memory Data bus
38	SMD7	I/O	Wave memory data bus	122	CMD15	I/O	Program memory Data bus
39	SMD0	I/O	Wave memory data bus	123	CMD0	I/O	Program memory Data bus
40	SMD15	I/O	Wave memory data bus	124	CMA21	O	Program address bus
41	SOE	O	read signal	125	PDT15	I/O	SWX access data bus
42	SWE	O	write signal	126	PDT14	I/O	SWX access data bus
43	SRAS	O	RAS signal	127	PDT13	I/O	SWX access data bus
44	SCAS	O	CAS signal	128	PDT12	I/O	SWX access data bus
45	REFRESH	O	REFRESH signal	129	PDT11	I/O	SWX access data bus
46	CS0	O	CS signal	130	PDT10	I/O	SWX access data bus
47	SMA0	O	Memory address bus	131	PDT9	I/O	SWX access data bus
48	SMA16	O	Memory address bus	132	PDT8	I/O	SWX access data bus
49	VCC49		Power supply	133	VCC133		Power supply
50	GND50		Ground	134	GND134		Ground
51	SMA1	O	Memory address bus	135	PDT7	I/O	SWX access data bus
52	SMA15	O	Memory address bus	136	PDT6	I/O	SWX access data bus
53	SMA2	O	Memory address bus	137	PDT5	I/O	SWX access data bus
54	SMA14	O	Memory address bus	138	PDT4	I/O	SWX access data bus
55	SMA3	O	Memory address bus	139	PDT3	I/O	SWX access data bus
56	SMA13	O	Memory address bus	140	PDT2	I/O	SWX access data bus
57	SMA4	O	Memory address bus	141	PDT1	I/O	SWX access data bus
58	SMA12	O	Memory address bus	142	PDT0	I/O	SWX access data bus
59	SMA5	O	Memory address bus	143	VCA143		Power supply
60	GND60		Ground	144	GND144		Ground
61	VCC61		Power supply	145	PAD2	I	SWX access address bus
62	SMA11	O	Memory address bus	146	PAD1	I	SWX access address bus
63	SMA6	O	Memory address bus	147	PAD0	I	SWX access address bus
64	SMA10	O	Memory address bus	148	VCC148		Power supply
65	SMA7	O	Memory address bus	149	GND149		Ground
66	SMA9	O	Memory address bus	150	PCS	I	Chip select
67	SMA17	O	Memory address bus	151	PWR	I	write enable
68	SMA8	O	Memory address bus	152	PRD	I	read enable
69	SMA18	O	Memory address bus	153	RXD0	I	for Midi or TO-HOST
70	SMA19	O	Memory address bus	154	RXD1	I	for Midi or Key scan
71	SMA20	O	Memory address bus	155	SCLKI	I	EXT Clock
72	SMA21	O	Memory address bus	156	ADIN	I	A/D converter
73	SMA22	O	Memory address bus	157	ADLR	O	A/D converter LR clock
74	SMA23	O	Memory address bus	158	DO0	O	DAC
75	CMA20	O	Program address bus	159	DO1	O	DAC
76	CMA19	O	Program address bus	160	SYSCLK	O	1/2 clock
77	VCC77		Power supply	161	VCC161		Power supply
78	GND78	O	Ground	162	GND162		Ground
79	CMA18	O	Program address bus	163	WCLK	O	for DAC LR clock
80	CMA17	O	Program address bus	164	QCLK	O	1/12 clock
81	CMA5	O	Program address bus	165	BCLK	O	IIS-DAC clock
82	CMA6	O	Program address bus	166	SYI	I	Synch signal
83	CMA4	O	Program address bus	167	IRQ0	I	Interrupt request
84	CMA7	O	Program address bus	168	NMI	I	Interrupt request

● **HD63266F** (XI939A00) **FDC** (Floppy Disk Controller) DM : IC800

PIN NO.	NAME	I/O	FUNCTION	PIN NO.	NAME	I/O	FUNCTION
1	8"//5"	I	Data transmission speed	33	/TRKO	I	Track 00 signal
2	XTALSET	I	Clock select	34	/INDEX	I	Index signal
3	/RESET	I	Rest	35	/RDATA	I	Read data input from FDD
4	E//RD	I	Enable/Read	36	XTAL2		Clock
5	RW//WR	I	Read/write/Write	37	EXTAL2		
6	/CS	I	Chip select	38	NC		
7	/DACK	I	DMA acknowledge	39	XTAL1		Clock
8	RS0	I	Register select	40	EXTAL1		
9	RS1	I		41	VSS4		Ground
10	VSS1		Ground	42	VSS5		
11	VSS2			43	NC		
12	D0	I/O	Data bus	44	VCC2		Power supply
13	D1	I/O		45	VCC3		
14	D2	I/O		46	VCC4		
15	D3	I/O		47	/WGATE	O	Write control
16	D4	I/O		48	/WDATA	O	Writ data to FDD
17	D5	I/O		49	VSS6		Ground
18	D6	I/O		50	/STEP	O	Step signal to control head of FDD
19	D7	I/O		51	/HDIR	O	Direction
20	/DREQ	O	DMA request	52	/HLOAD	O	Head load
21	/IRQ	O	Interrupt request	53	/HSEL	O	Head select
22	/DEND	I	Data end	54	VSS7		Ground
23	VSS3		Ground	55	/DS0	O	Drive select
24	1/2 EX1			56	/DS1	O	
25	VCC1		Power supply	57	/DS2	O	
26	NUM1	I		58	/DS3	O	
27	NUM3	I		59	VSS8		Ground
28	IFS	I	Host interface select	60	/MON0	O	Motor on
29	SFORM	I	Format data	61	/MON1	O	
30	/INP	I	Index pulse	62	/MON2	O	
31	/READY	I	Ready from FDD	63	/MON3	O	
32	/WPRT	I	Write control signal	64	VSS9		Ground

● **S6A0065B01-Q0RJ** (XV993A00) **LCD DRIVER** PN : IC200

PIN NO.	NAME	I/O	FUNCTION	PIN NO.	NAME	I/O	FUNCTION
1	SC29	O	Segment signal output for LCD driving	31	Vcc		LCD driver circuit (-5V)
2	SC28	O		32	CL1	I	Data shift
3	SC27	O		33	CL2	I	Latch clock
4	SC26	O		34	GND(Vss)		GND (0V)
5	SC25	O		35	DL1	I/O	Data input / output
6	SC24	O		36	DR1	I/O	
7	SC23	O		37	DL2	I/O	
8	SC22	O		38	DR2	I/O	
9	SC21	O		39	NC		
10	SC20	O		40	M	I	Alternated signal for LCD driver output
11	SC19	O		41	SHL1	I	Data interface
12	SC18	O		42	SHL2	I	Data interface
13	SC17	O		43	FCS	I	Mods selection
14	SC16	O		44	V1	I	Power supply
15	SC15	O		45	V2	I	
16	SC14	O		46	V3	I	
17	SC13	O		47	V4	I	
18	SC12	O		48	V5	I	
19	SC9	O		49	V6	I	
20	SC10	O		50	SC40	O	Segment signal output for LCD driving
21	SC11	O		51	SC39	O	
22	SC8	O		52	SC38	O	
23	SC7	O		53	SC37	O	
24	VDD		Power supply	54	SC36	O	
25	SC6	O	Segment signal output for LCD driving	55	SC35	O	
26	SC5	O		56	SC30	O	
27	SC4	O		57	SC31	O	
28	SC3	O		58	SC32	O	
29	SC2	O		59	SC33	O	
30	SC1	O		60	SC34	O	

● S6A0069X10-Q0RJ (XV226A00) LCD DRIVER

PN : IC100

PIN NO.	NAME	I/O	FUNCTION	PIN NO.	NAME	I/O	FUNCTION
1	S22	O	Segment signal output for LCD driving	41	DB2	I/O	Data interface
2	S21	O		42	DB3	I/O	
3	S20	O		43	DB4	I/O	
4	S19	O		44	DB5	I/O	
5	S18	O		45	DB6	I/O	
6	S17	O		46	DB7	I/O	
7	S16	O		47	C1	O	Common signal output for LCD driving
8	S15	O		48	C2	O	
9	S14	O		49	C3	O	
10	S13	O		50	C4	O	
11	S12	O		51	C5	O	
12	S11	O		52	C6	O	
13	S10	O		53	C7	O	
14	S9	O		54	C8	O	
15	S8	O		55	C9	O	
16	S7	O		56	C10	O	
17	S6	O		57	C11	O	
18	S5	O		58	C12	O	
19	S4	O		59	C13	O	
20	S3	O		60	C14	O	
21	S2	O		61	C15	O	
22	S1	O		62	C16	O	
23	Vss		Ground	63	S40	O	Segment signal output for LCD driving
24	OSC1	I	Oscillator	64	S39	O	
25	OSC2	O	Oscillator	65	S38	O	
26	V1		Power supply	66	S37	O	
27	V2			67	S36	O	
28	V3			68	S35	O	
29	V4			69	S34	O	
30	V5			70	S33	O	
31	CLK1	O	Data latch clock	71	S32	O	
32	CLK2	O	Data shift clock	72	S31	O	
33	Vdd		Power supply (+5 V)	73	S30	O	
34	M	O	Altamated signal for LCD driver outout	74	S29	O	
35	D	O	Display data interface	75	S28	O	
36	RS	I		76	S27	O	
37	R/W	I	Read/write	77	S26	O	
38	E	I	Enable	78	S25	O	
39	DB0	I/O	Data interface	79	S24	O	
40	DB1	I/O	Data interface	80	S23	O	

■ IC BLOCK DIAGRAM

● **TC74HCU04AP** (IG142200)
SN74HCU04N (IG142250)
Hex Inverter
AM : IC810

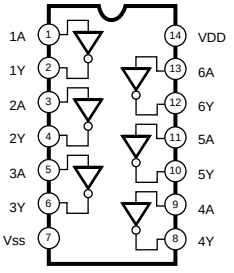

● **TC74HC32AP** (IR003200)
SN74HC32N (IR0032500)
Quad 2 Input OR
DM : IC360

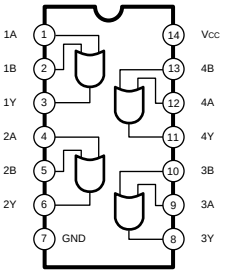

● **TC74HC74AP** (IR007400)
SN74HC74N (IR007450)
Dual D-Type Flip-Flop
DM : IC999

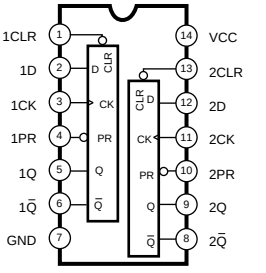

INPUTS				OUTPUTS	
PR	CLR	CLK	D	Q	Q
L	H	X	X	H	L
H	L	X	X	L	H
L	L	X	X	H	H
H	H	f	H	H	L
H	H	f	L	L	H
H	H	L	X	Q₀	Q₀

● **TC74HC138AP** (IR013800)
SN74HC138N (IR013850)
3 to 8 Demultiplexer
DM : IC350, 600

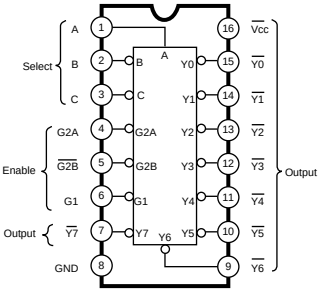

● **TC74HC374AP** (IR037400)
SN74HC374N (IR037450)
Octal 3-State D-Type Flip-Flop
DM : IC500, 700

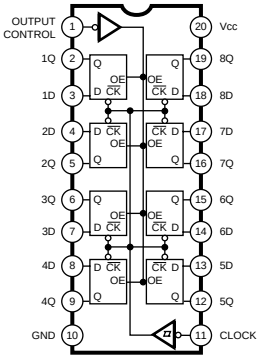

● **SN75C1168N** (XU463A00)
Line Driver / Receiver
AM : IC700

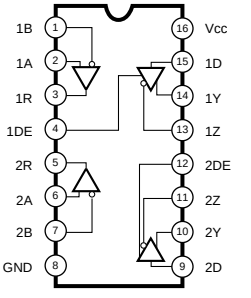

● **µPC4572HA** (XF633A00)
Dual Operational Amplifier
AM : IC100

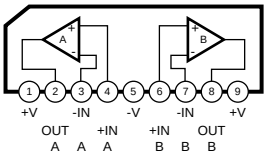

● **M5291P** (XV856A00)
DC-DC Converter
DM : IC900

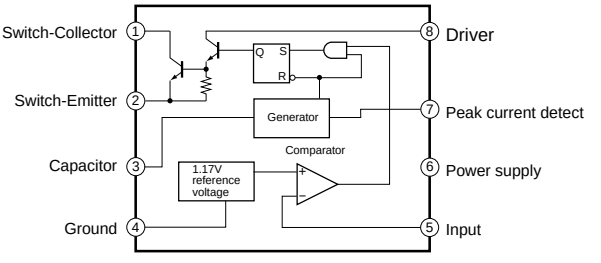

● **LA4705NA** (XQ619A00)
Power Amplifier
AM: IC400

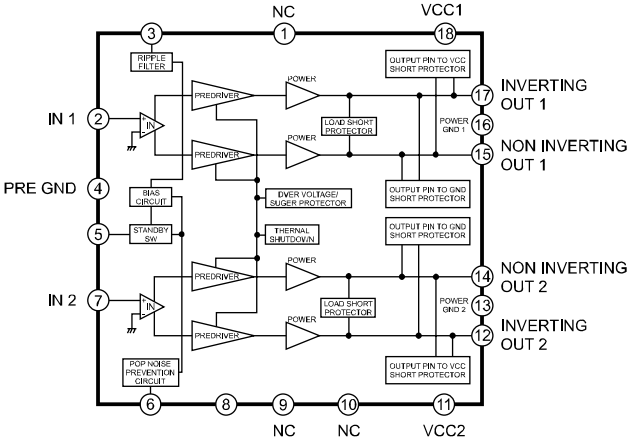

● **M5243AP06** (XU911A00)
Graphic Equalizer
AM : IC370

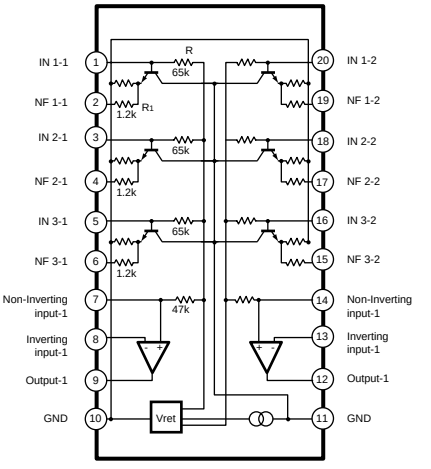

■ CIRCUIT BOARDS INDEX

AM (XV935C0) 24
DM (XZ670D0) 20/21
MK-H (XR565C0) 27
MK-L (XR564C0) 26
MKS5 (XZ594A0) 26
PN 1/5 (XV934B0) 22/23
PN 2/5 (XV934B0) 24
PN 3/5 (XV934B0) 24
PN 4/5 (XV934B0) 25
PN 5/5 (XV934B0) 25

Note : See parts list for details of circuit board conponent parts.

■ CIRCUIT BOARDS

● DM Circuit Board

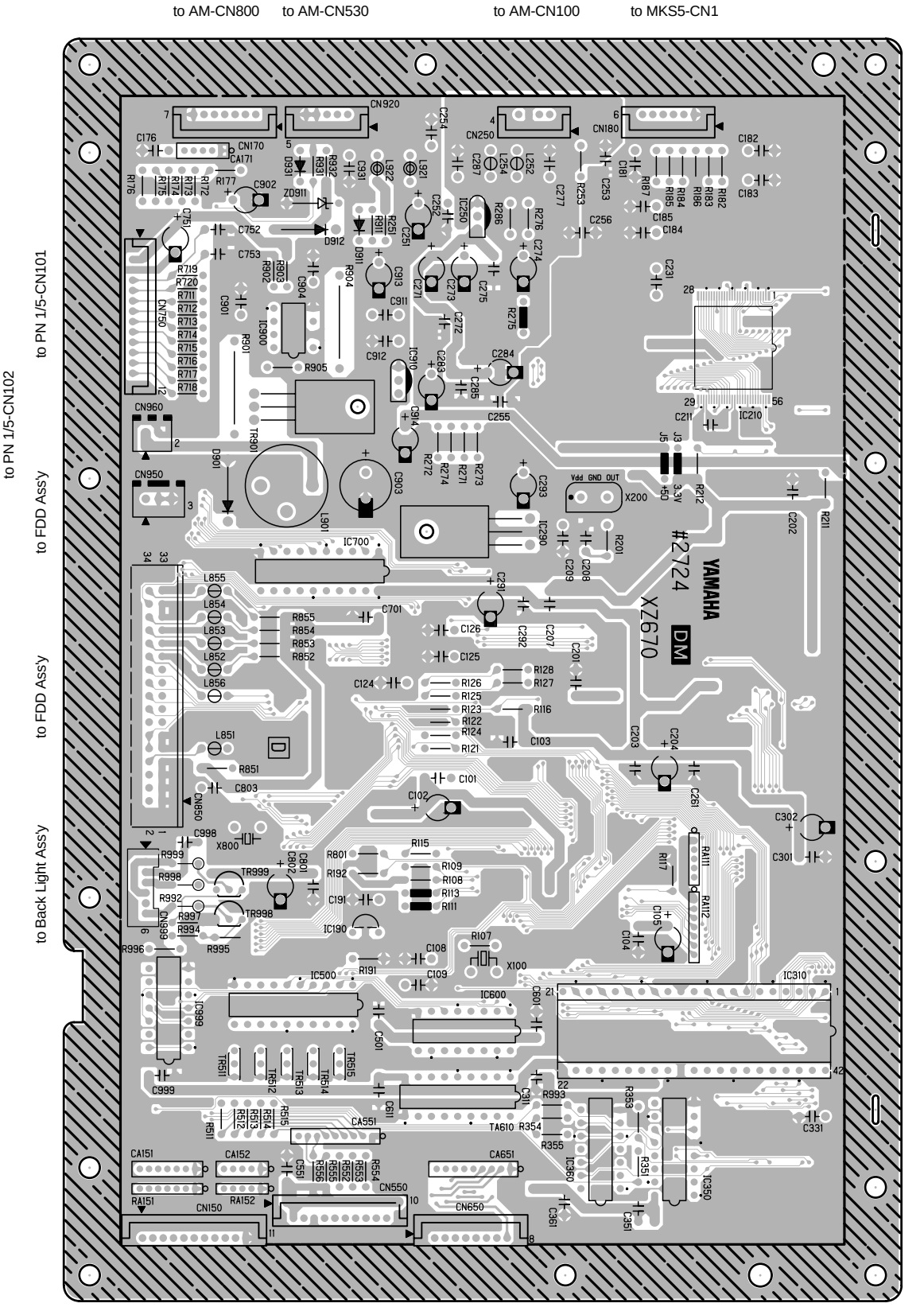

2NA-V701940-1 1

● DM Circuit Board

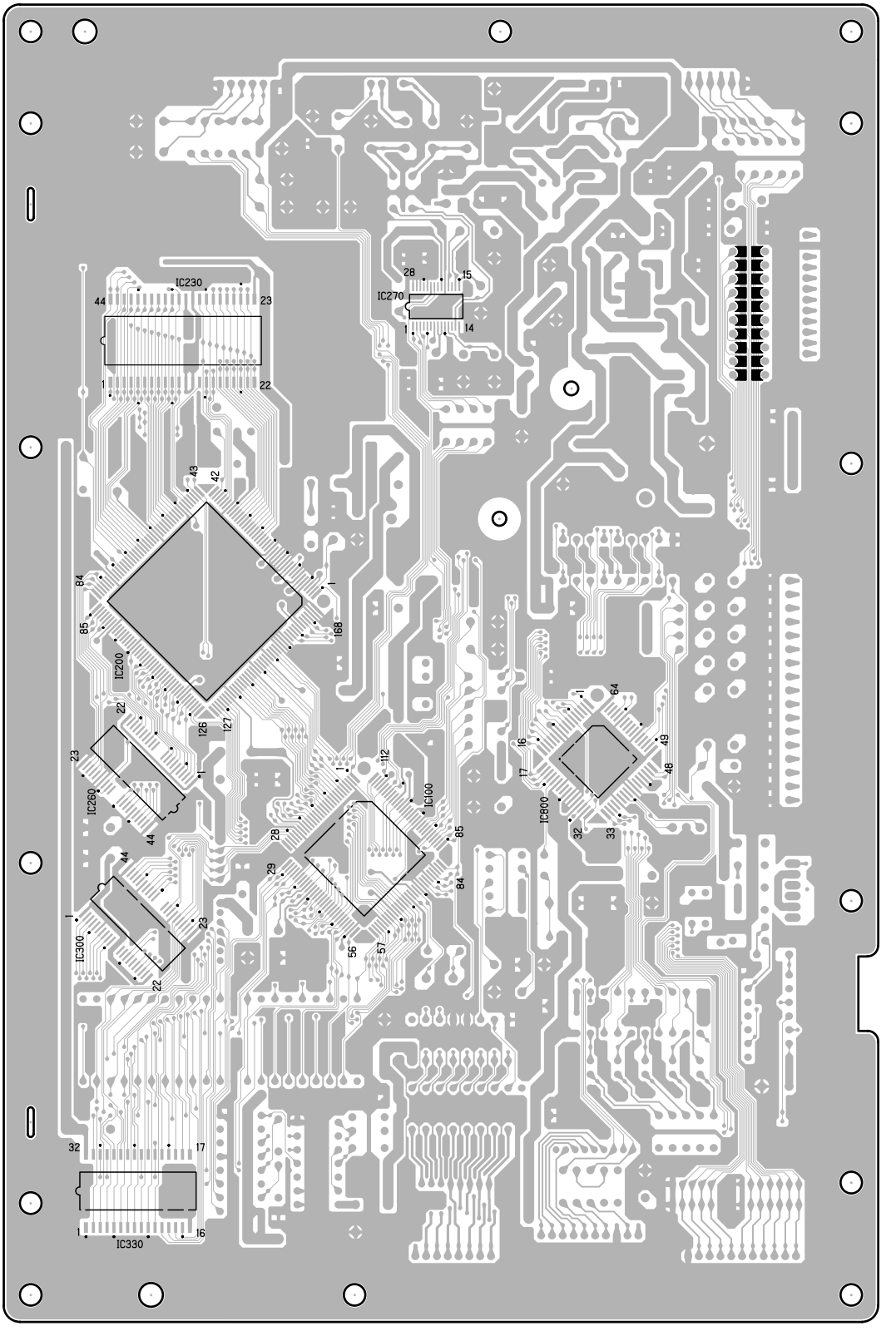

Pattern side

2NA-V701940-2 1

● PN 1/5 Circuit Board

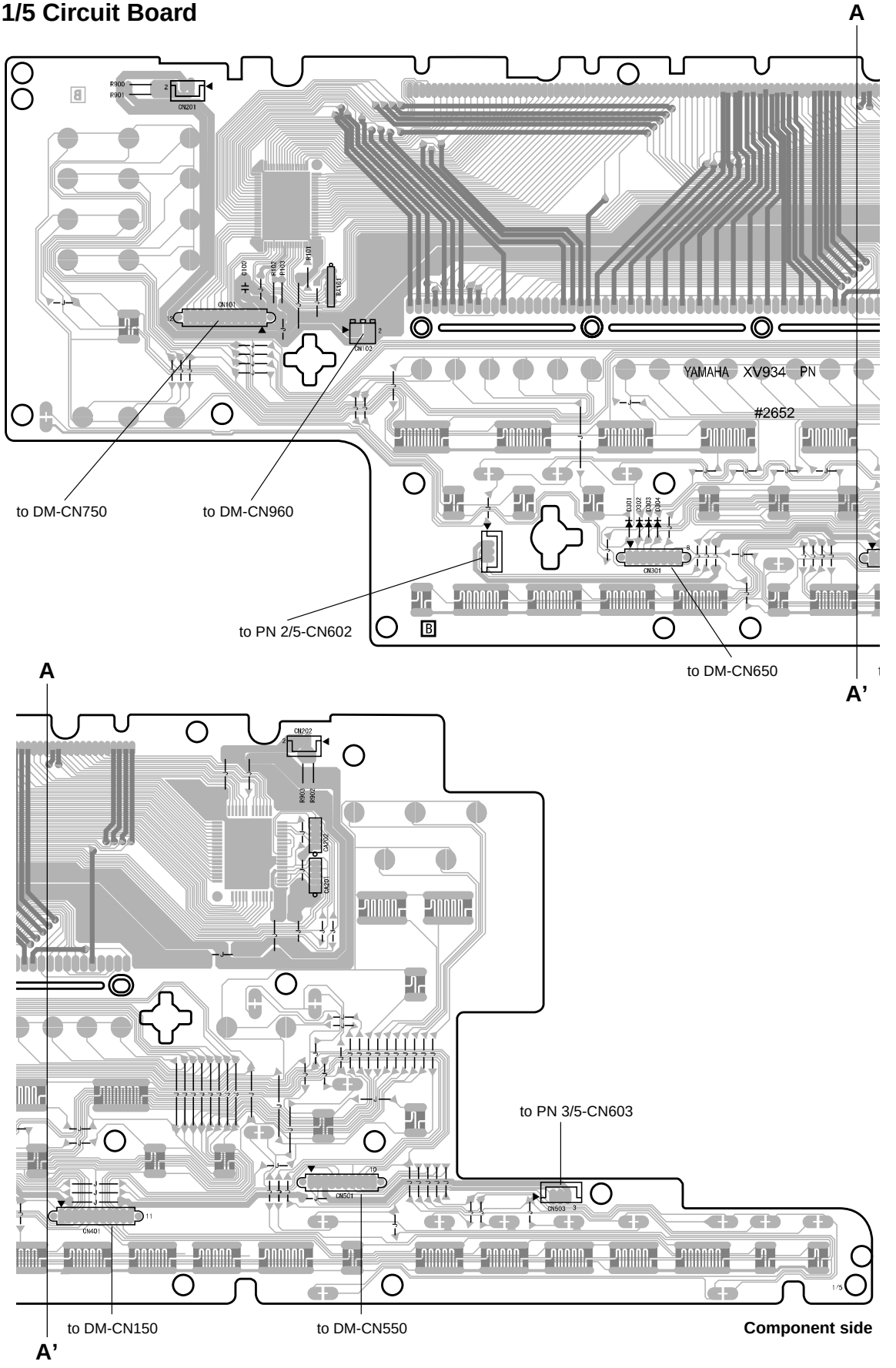

2NA-V701960-1

● PN 1/5 Circuit Board

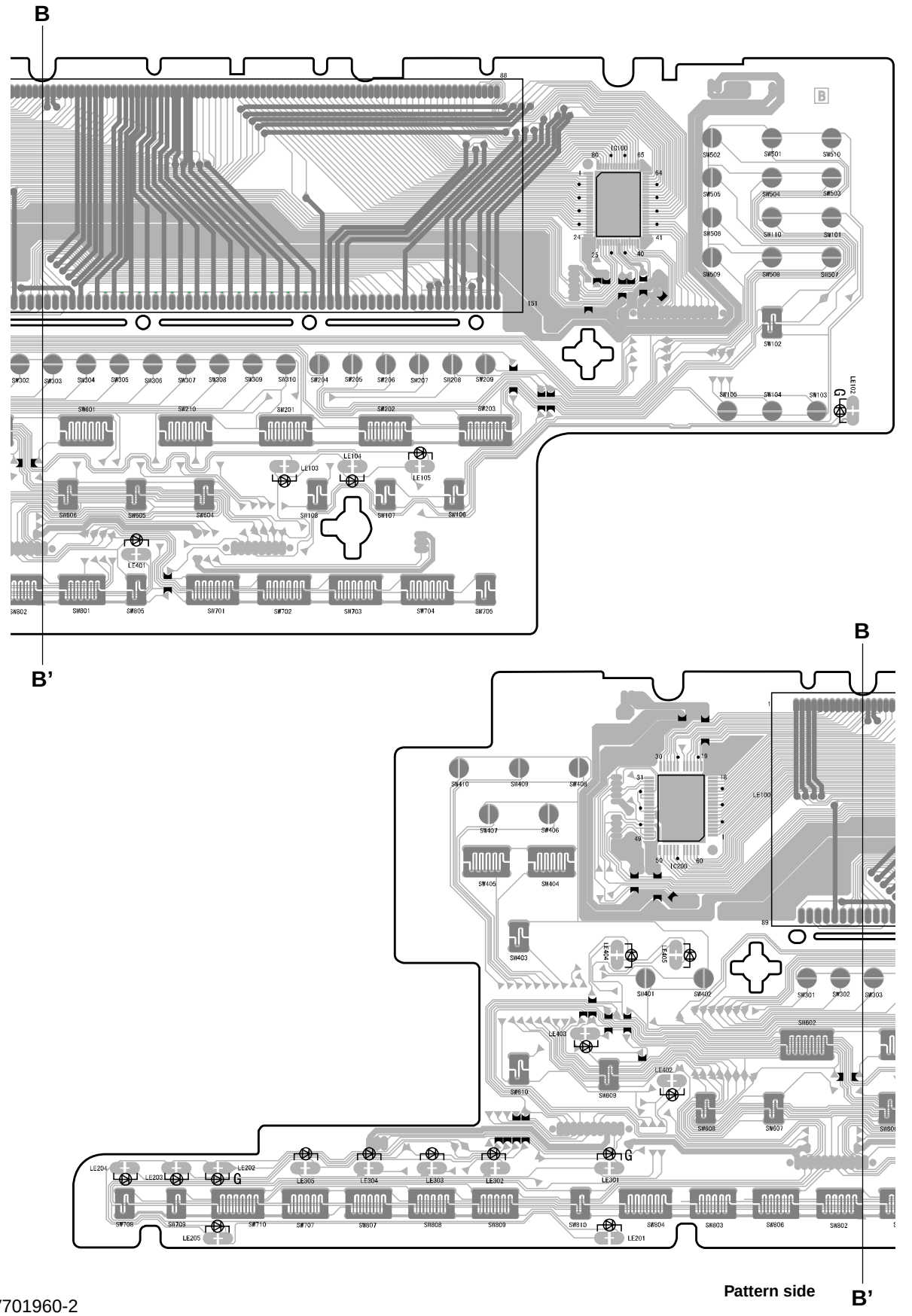

● AM Circuit Board

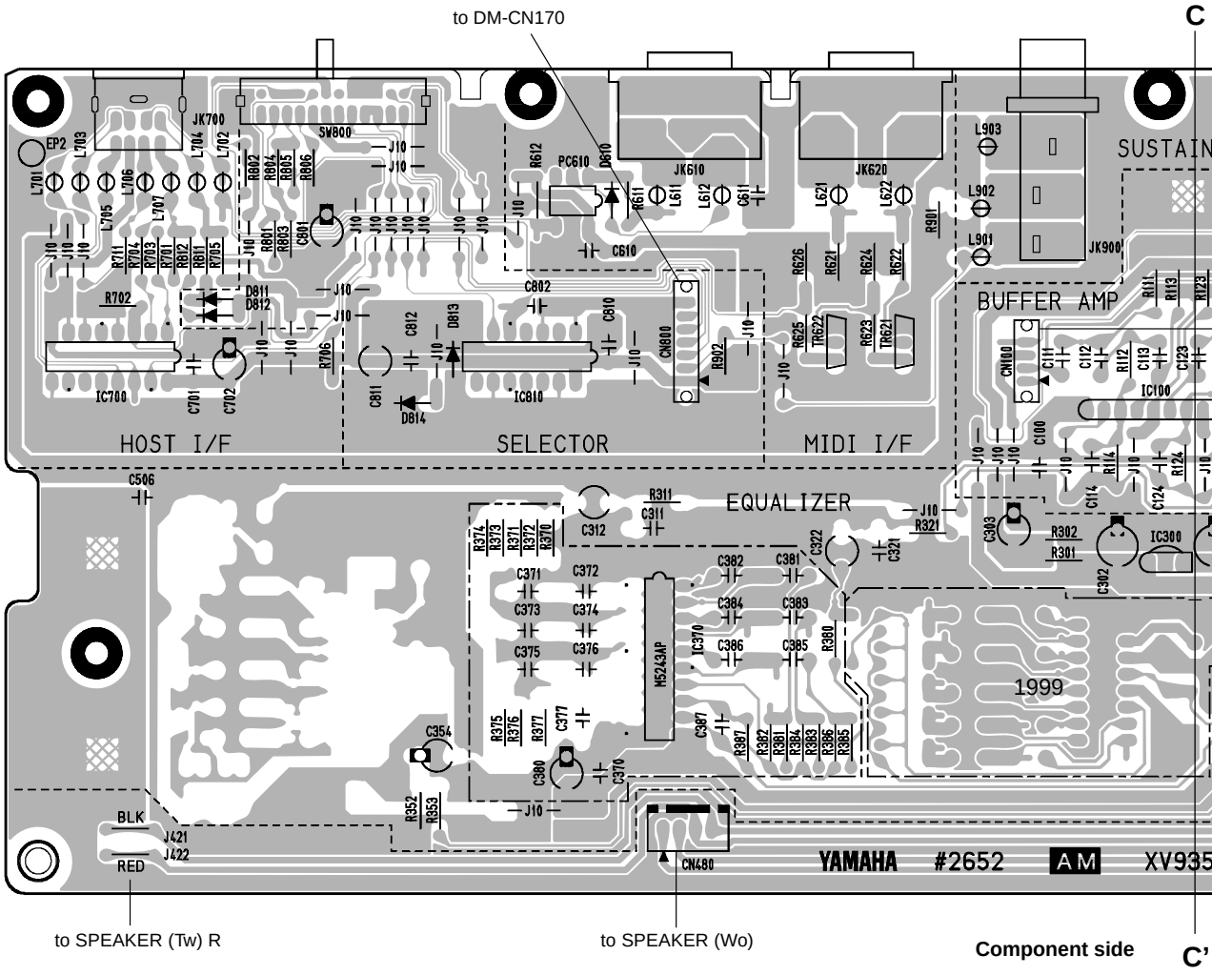

● PN 2/5 Circuit Board

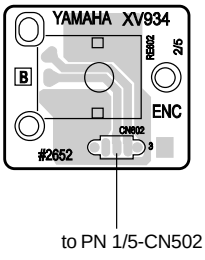

Component side

● PN 3/5 Circuit Board

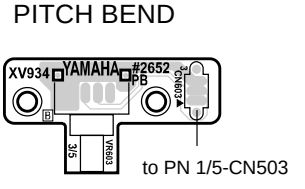

Component side

AM : 2NA-V362300 /1

PN 2/5, PN 3/5 : 2NA-V701960-1

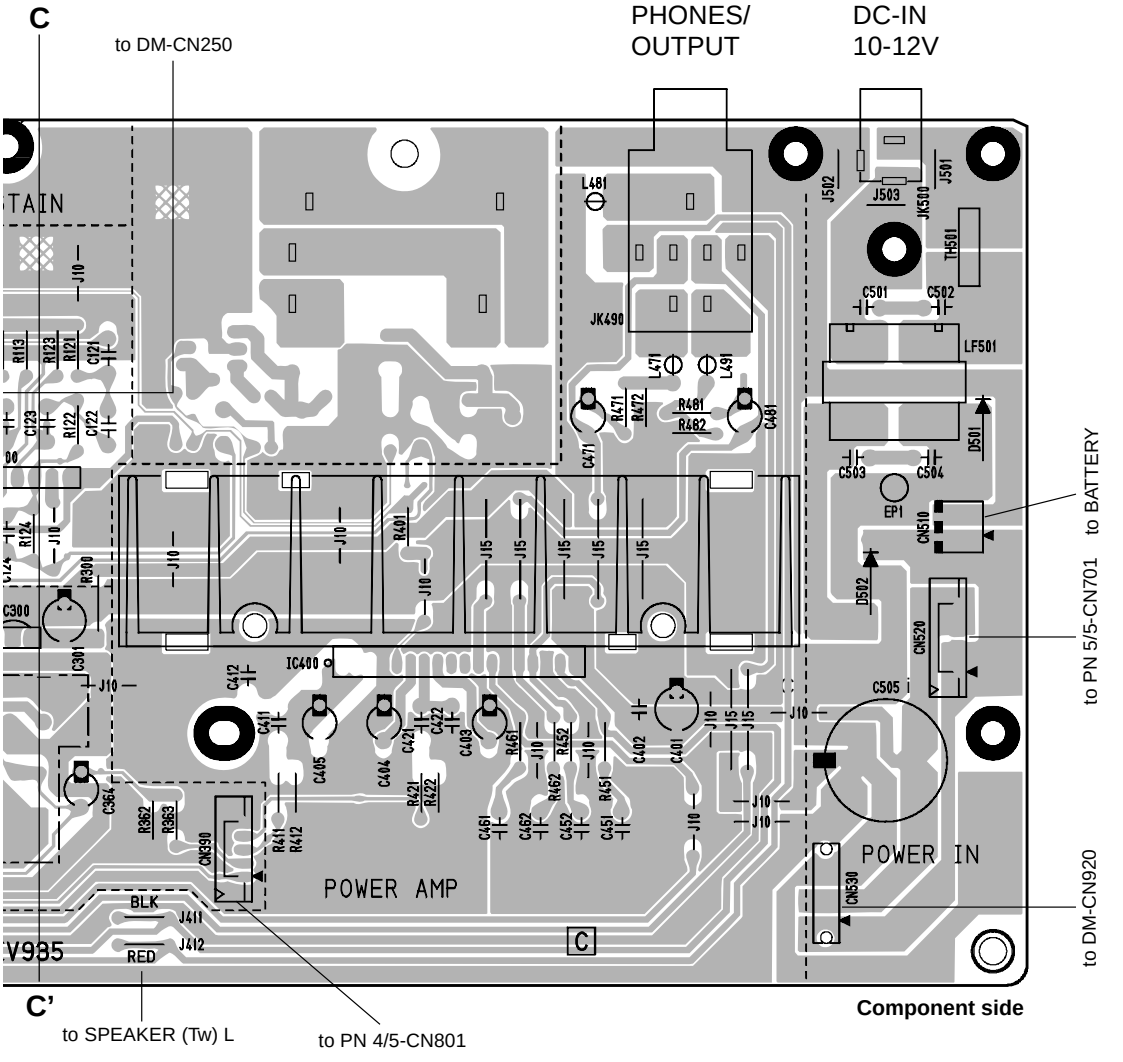

● PN 4/5 Circuit Board

MASTER VOLUME

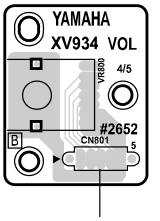

to AM-CN390

Component side

● PN 5/5 Circuit Board

STANDBY/ON

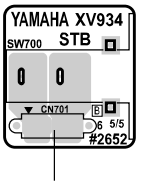

to AM-CN520

Component side

AM : 2NA-V362300 ⚠1
PN 4/5, PN 5/5 : 2NA-V701960-1

● MK-L Circuit Board

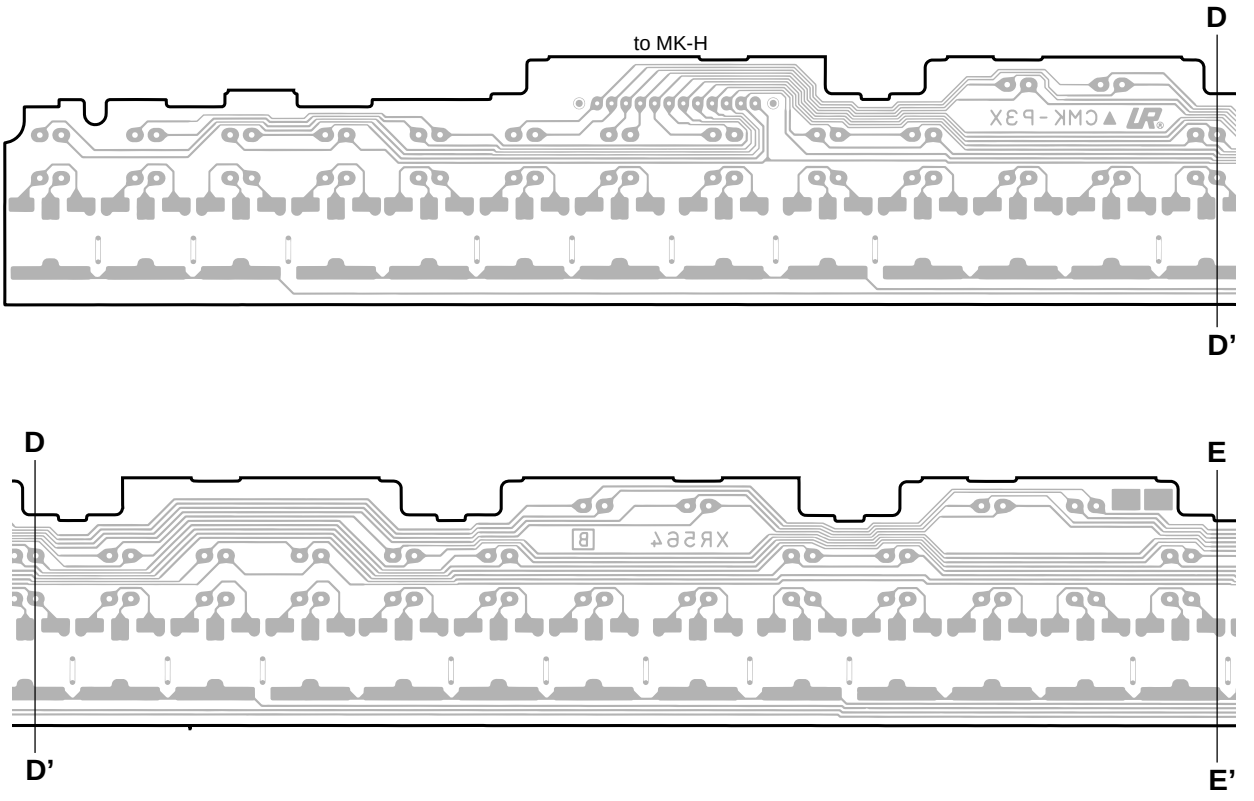

● MKS5 Circuit Board

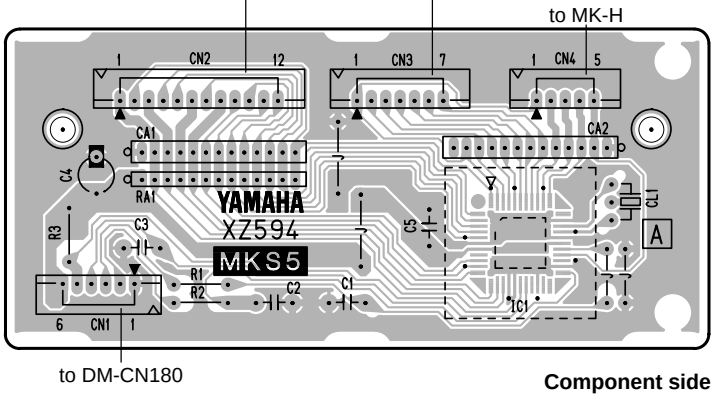

MK-L : 2NA-VV58380
MKS5 : 2NAKZ-V679750 △1

● MK-H Circuit Board

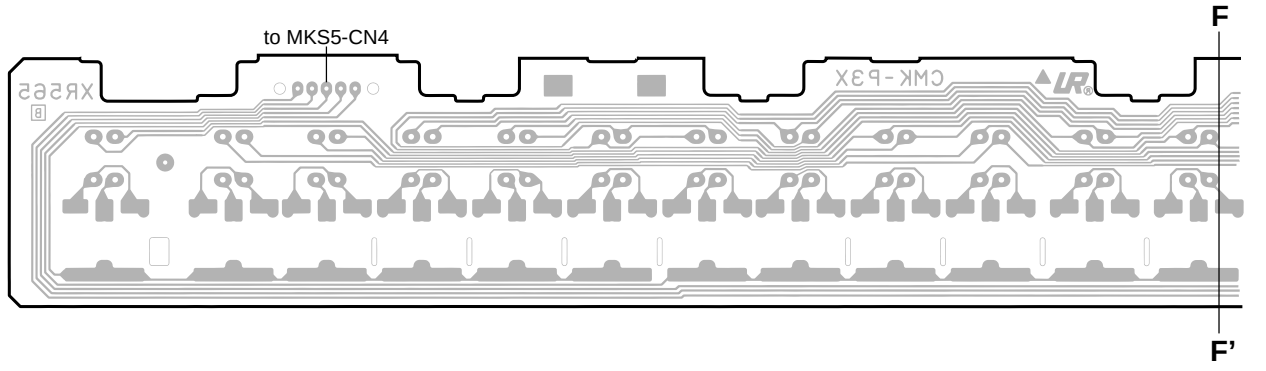

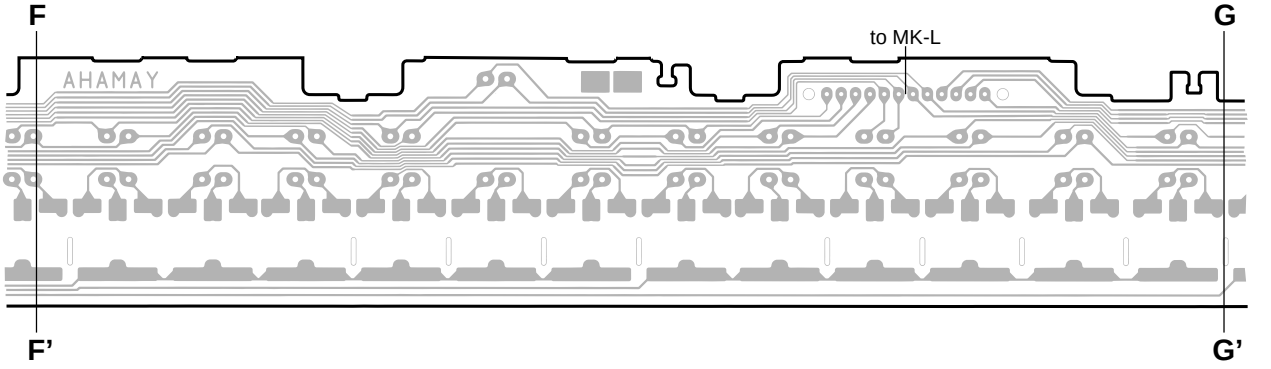

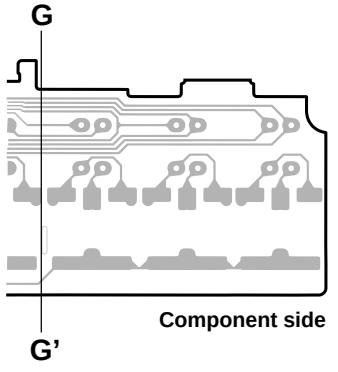

■ TEST PROGRAM

1. PREPARATION

1) PA-6 (AC adaptor) is used.
2) The volume is usually moved to the use position when no volume change is required.
3) Measuring instruments:frequency counter, level meter (with JIS-C filter)
   Note : Connect a stereo plug to the [PHONES/OUTPUT] jack at 33 ohms.
4) Jigs : foot switch, MIDI cable, floppy disk (2HD & 2DD)

2. HOW TO ENTER THE TEST PROGRAM

MANUAL MODE :

While pressing the C2#, F2 and G2# keys, turn the [STANDBY/ON] switch on.

3. PROCEEDING THROUGH THE TEST PROGRAM

MANUAL MODE :

1) When the test program is started, “TEST” appears on the LCD.
2) Select the test program item to be executed by pressing the [BACK] or [NEXT] button.
3) Press the [START/STOP] button to execute testing.
   When the test result is OK, press the [START/STOP] button to return to the test item name on display.
   Proceed to the next test by pressing the [BACK] or [NEXT] button.When the test result is OK, an asterisk (*) is added in front of its item name on display.
   When the test result is NG, press the [DEMO] button or the lowest (leftmost) white key on the keyboard to return to the test item name on display and then turn off the [STANDBY/ON] switch to end the test program.

4. TEST PROGRAM LIST

TEST No.	LCD (initial)	Test Functions and Judgment Criteria
1	001:Version	Displays ROM version. ROM (Program, Wave) versions are displayed alternately on the LCD.
2	002:Rom Chk1	Checks the ROM. The test results appear on the LCD.
3	003:Ram Chk1	Checks all the RAMs that are connected to the CPU. The test results appear on the LCD.
4	004:WaveRomChk1	Checks the WAVE ROMs that are connected to the CPU. The test results appear on the LCD.
7	007:FDD_JChk	Insert the floppy disks one by one (2DD and 2HD). Checks the floppy disk drive unit.
9	009:Eff1Ram Chk	Checks the effect RAM1. Check by hearing that the sound of C3 is produced and no noise is heard.
11	011:TG1 Chk	Outputs the sine wave by changing the channels in sequence from C2 to G4. After auto-scaling is finished, individual keys can be played. (If playing two or more keys simultaneously, the first pressed key has priority to make a sound.) If the [VOICE R1] button is pressed, that effect is applied when the sound is produced.
13	013:Pitch Chk	Connect the frequency counter to the [PHONES] jack. Sets PAN to Center and produces a signal at 440 +/- 0.22 Hz Check that the correct signal is produced.
14	014:Output R	Connect the level meter (with a JIS-C filter) to the [PHONES] jack. (33 ohm load) Set the [MASTER VOLUME] at maximum and check the output level (1 kHz). **PHONES L :** less than -50.0 dBm **PHONES R :** -11.0 dBm +/- 2 dB
15	015:Output L	Connect the level meter (with a JIS-C filter) to the [PHONES] jack. (33 ohm load) Set the [MASTER VOLUME] at maximum and check the output level (1 kHz). **PHONES L :** -11.0 dBm +/- 2 dB **PHONES R :** less than -50.0 dBm
16	016:EQ Low	Check the sine wave output at about 65.4Hz (C1).
17	017:EQ Mid	Check the sine wave output at about 523Hz (C4).
18	018:EQ High	Check the sine wave output at about 4186Hz (C7).

TEST No.	LCD (initial)	Test Functions and Judgment Criteria
19	019:D/A Noise	Connect the level meter (with a JIS-C filter) to the [PHONES] jack. (33 ohm load) Set the [MASTER VOLUME] at maximum. Check D/A converter noise. **PHONES L/R :** Less than -80.0 dBm
20	020:SW,LED Chk	Check the switches on the panel and LED. Press the switches on the LCD as instructed. A pre-assigned note is output when the switch is pressed. (See table 1.) When the switch with LED is pressed, that LED will light up. As the check result appears on the LCD when all the switches are pressed as instructed. Check that OK is displayed. For the dial check, confirm that turning the data dial clockwise will increase the figure in the range of 0 to 100 and turning it counterclockwise will reduce it. (To stop this check before reaching its end, press the lowest (leftmost) white key on the keyboard to return to the test item name on display.**)**
21	021:All LED On	Check that the all LEDs on the panel are on.
22	022:Red LED On	Check that the all red LEDs on the panel are on.
23	023:GreenLED On	Check that the all green LEDs on the panel are on.
28	028:All LCD On	Check that all LCD dots are on.
29	029:All LCD Off	Check that all LCD dots are off.
30	030:LCD BacLig	Lighting (color) check of LCD back light. Press the [DIRECT ACCESS] button and check that the back light color changes in the order of violet, red, OFF and blue.
32	032:Pedal1 Chk	Connect the foot switch (FC-4 or FC-5) to the [FOOT SWITCH] jack. Check that the C3 note is output when pressing and releasing the pedal and the C4 note is output when pressing the pedal again.
34	034:PBWheel Chk	Check that the C3 note is output when rotating the [PITCH BEND] wheel to minimum and the C4 note is output when rotating it to maximum.
38	038:Midi Chk	After connecting the [MIDI IN] jack and [MIDI OUT] jack with a MIDI cable, execute the test. Set the [HOST SELECT] switch to MIDI Check that the C4 note is output and that the test results appear on the LCD.
39	039:To Host Chk	Connect pin 3 to pin 5 and pin 6 to pin 8 of the TO HOST terminal, and execute the test. Check that the following note sounds when changing the HOST SELECT switch position according to the LCD indication; the LCD will display “OK”. (PC1 : note C3 ; PC2 : note C4 ; MAC : note C5) If there is no output after one second, it is judged NG.
41	041:Battery Chk	Removing the AC adapter sets to the Battery Check mode. (In advance, install the batteries.) As the check result appears on the LCD, check that OK and the A/D value of the battery are displayed. The A/D value of the battery is detected and displayed on the LCD about 10 seconds after the power was turned on.
42	042:Rom Chk2	Checks the ROMs that are connected to the CPU. The test results appear on the LCD.
43	043:Ram Chk2	Checks the RAMs that are connected to the CPU. The test results appear on the LCD.
44	044:WaveRomChk2	Checks the WAVE ROM. The test results appear on the LCD.
47	047:BackUp Chk2	Performs the RAM back-up check. Check that the display reads “NG,” then turn off the power switch. (A time of the beginnings surely becomes NG.) Enter the test program and perform the RAM back-up checks, then check again. Check that the LCD displays “OK.”

TEST No.	LCD (initial)	Test Functions and Judgment Criteria
48	048:Factory Set	All the RAMs are initialized and set to the factory preset data when executing this test. The results appear on the LCD.
49	049:Test Exit	Exit from the test program after executing this test.

*** NOTE :** The above tests **Nos. 42-47**, require approximately 25 minutes to conduct.
If the time is not available to perform the tests, proceed the test No.48 by pressing several the [NEXT] button.

● TABLE 1

ORDER	SWITCH	LCD	NOTE
1	DSP	Push DSP	C3
2	DSP FAST/SLOW	Push Fast/Slow	C#3
3	TOUCH	Push Touch	D3
4	SUSTAIN	Push Sustain	D#3
5	HARMONY	Push Harmony	E3
6	BACK	Push Back	F3
7	NEXT	Push Next	F#3
8	DIRECT ACCESS	Push Direct Acces	G3
9	VOICE CHANGE	Push Voice Change	G#3
10	MIXER	Push Mixer	A3
11	Track 1	Push Track 1	A#3
12	Track 2	Push Track 2	B3
13	Track 3	Push Track 3	C4
14	Track 4	Push Track 4	C#4
15	Track 5	Push Track 5	D4
16	Track 6	Push Track 6	D#4
17	Track 7	Push Track 7	E4
18	Track 8	Push Track 8	F4
19	Track 9	Push Track 9	F#4
20	Track 10	Push Track 10	G4
21	Track 11	Push Track 11	G#4
22	Track 12	Push Track 12	A4
23	Track 13	Push Track 13	A#4
24	Track 14	Push Track 14	B4
25	Track 15	Push Track 15	C5
26	Track 16	Push Track 16	C#5
27	(Tenkey) 1	Push Tenkey 1	D5
28	(Tenkey) 2	Push Tenkey 2	D#5
29	(Tenkey) 3	Push Tenkey 3	E5
30	(Tenkey) 4	Push Tenkey 4	F5
31	(Tenkey) 5	Push Tenkey 5	F#5
32	(Tenkey) 6	Push Tenkey 6	G5
33	(Tenkey) 7	Push Tenkey 7	G#5
34	(Tenkey) 8	Push Tenkey 8	A5
35	(Tenkey) 9	Push Tenkey 9	A#5
36	(Tenkey) –	Push Tenkey –	B5
37	(Tenkey) 0	Push Tenkey 0	C3
38	(Tenkey) +	Push Tenkey +	C#3

ORDER	SWITCH	LCD	NOTE
39	EXIT	Push Exit	D3
40	DEMO	Push Demo	D#3
41	RECORD	Push Record	E3
42	SONG	Push Song	F3
43	STYLE	Push Style	F#3
44	MUSIC DATABASE	Push MDB	G3
45	VOICE L	Push Voice L	G#3
46	VOICE R1	Push Voice R1	A3
47	VOICE R2	Push Voice R2	A#3
48	ACMP ON/OFF	Push Acmp On/Off	B3
49	ACMP/SONG VOLUME	Push Acmp Volume	C4
50	TEMPO/TAP	Push Tempo/Tap	C#4
51	TRANSPOSE	Push Transpose	D4
52	FUNCTION	Push Function	D#4
53	PART ON/OFF VOICE L	Push Part Voice L	E4
54	PART ON/OFF VOICE R1	Push Part Voice R1	F4
55	PART ON/OFF VOICE R2	Push Part Voice R2	F#4
56	LOAD	Push Load	G4
57	SAVE	Push Save	G#4
58	UTILITY	Push Utility	A4
59	SYNC STOP	Push Sync Stop	A#4
60	SYNC START	Push Sync Start	B4
61	START/STOP	Push Start/Stop	C5
62	INTRO	Push Intro	C#5
63	MAIN A	Push Main A	D5
64	MAIN B	Push Main B	D#5
65	ENDING	Push Ending	E5
66	ONE TOUCH SETTING	Push OTS	F5
67	MEMORY	Push Memory	F#5
68	REGIST 1	Push Regist 1	G5
69	REGIST 2	Push Regist 2	G#5
70	REGIST 3	Push Regist 3	A5
71	REGIST 4	Push Regist 4	A#5
72	FREEZE	Push Freeze	B5
73	MULTI PAD 1	Push Pad 1	C3
74	MULTI PAD 2	Push Pad 2	C#3
75	MULTI PAD 3	Push Pad 3	D3
76	MULTI PAD 4	Push Pad 4	D#3
77	MULTI PAD STOP	Push Pad Stop	E3
78	Dial	Dial Down	–
79	Dial	Dial Up	–

■ DATA BACKUP & INITIALIZATION

● Data Backup

Except for the data listed below, all PSR-550 panel settings are reset to their initial settings whenever the power is turned on. The data listed below are backed up - i.e. retained in memory - as long as an AC adaptor is connected or a set of batteries is installed.

- User Style data
- User Pad data
- Registration Memory data
- Registration Memory Bank Number
- Registration Memory/One Touch Setting status
- Freeze on/off
- MIDI Transmit settings
- MIDI Receive settings
- Voice Set on/off
- Voice L (Voice Change, Mixer)
- Fingering mode
- Split Point
- Sustain on/off
- Upper Octave setting
- Pitch Bend Range
- Scale Tuning
- Transpose
- Footswitch Function, Polarity
- Touch on/off, Sensitivity
- Multi Pad setting
- Master Tuning
- Metronome on/off

Even though these settings are retained in memory, you should save them — and all your important data — to floppy disk for permanent, safe storage. To save all of the data types listed above to floppy disk, use the Save operation and select "All" as the file type.

All data listed above will be lost if the power is interrupted — in other words, if the power is turned off, the AC adaptor is disconnected and the batteries are removed. When this happens, the next time you turn on the PSR-550, a "Clear Backup" message appears in the display, the Data Initialization operation (below) is automatically executed, and the PSR-550 is set to the Style mode.

● Data Initialization

All data can be initialized and restored to the factory preset condition by turning on the power while holding the highest (rightmost) white key on the keyboard. "Now Initializing" will appear briefly on the display.

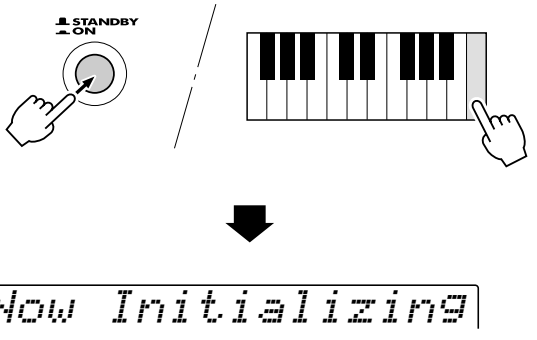

⚠ CAUTION

- All registration and User Style/Pad memory data, plus the other settings listed above, will be erased and/or changed when the data initialization procedure is carried out.
- Carrying out the data initialization procedure will usually restore normal operation if the PSR-550 freezes or begins to act erratically for any reason.

■ ALERT MESSAGE LIST

No File	The disk contains no file to be loaded, copied, or be deleted. Insert the disk that contains files to be loaded, copied, or deleted.
Unformatted Disk	An unformatted disk is inserted.
Disk Error	An error occurred during execution of a disk operation. Try changing the disk. This message also may appear when executing the Load operation if the internal memory becomes full.
Write-protected	The floppy disk's write-protect tab is set to ON. Remove the disk, set write-protect to off, reinsert the disk and attempt the operation again.
File Protected	The file is a purposely "copy-protected" disk. The Copy function is not possible.
No Disk	There is no floppy disk inserted into the disk drive. Insert a disk.
Insert Song Disk	This message appears when you press the [SONG] button without a disk in the disk drive.
Disk Removed	An error occured because the disk was removed during a disk operation. Never remove a disk during a disk operation since this could damage both the disk and the drive.
Disk Full	The disk's memory capacity is full and no additional data can be recorded. Delete one or more unneeded songs (using Delete), and attempt the operation again.
Wrong Disk	When using the Copy operation, the inserted disk is different from the source or destination disk. Remove the disk and reinsert the proper Disk.
Same Name	More than one file has the same name on the disk. Change the name.
Maximum 60 Songs	Maximum of 60 songs can be recorded. Delete one or more unneeded songs (using Delete), and attempt the song recording again.
Memory Full	If the internal memory becomes full during Style/Pad recording, this message will appear on the display and recording will stop.

Memory Over	This message appears when executing the Quantize or Recording operations (in the Style Recording mode) when the internal memory is full.
Data Not Found	This message appears when you attempt to edit, quantize or clear the track which contains no data in the Record mode.
User Style Full	This message indicates that recording a new User style cannot be started when all three User styles have recorded data. Make sure to clear at least one of the three User styles before recording a new User style.
Preset Data	This message appears when you attempt to edit, or quantize the track (other than RHYTHM) which contains preset data in the Style Record mode.
Cannot Operate	This function cannot be used during Song/Style/Pad recording.
Cannot Set MIDI	The MIDI function cannot be set during recording, playback, and disk operations.
CannotTurnHar.On	Harmony cannot be turned on during Style/Pad recording.
CannotTurnDSP On	DSP cannot be turned on during Style/Pad recording.
CannotEnterFunc.	This message appears to indicate you cannot enter the function when you select a Multi Pad function in the Multi Pad Recording mode.
Clear Backup	• This message may appear when the PSR-550 is turned on, and indicates that user data temporarily stored in the internal memory has been lost . When this happens, the Data Initialization operation is automatically executed, and the PSR-550 is set to the Style mode. • If this message appears even when the AC adaptor is connected or the battery power is adequate, the backup data is faulty. Use the Data Initialization function .
Now Initializing	All data can be initialized and restore to the factory preset condition by turning the STANDBY switch ON while holding the highest (rightmost) white key on the keyboard.
Battery Low	When the batteries run down this message appears every few seconds. Exchange all the batteries with the new ones .

■ MIDI IMPLEMENTATION CHART

[Portable Keyboard]
Model : PSR-550

MIDI Implementation Chart

Date : 30-NOV-2000
Version : 1.0

Function...		Transmitted		Recognized		Remarks
Basic	Default	1 - 16	*1	1 - 16	*2	
Channel	Changed	1 - 16	*1	1 - 16	*2	
	Default	3		3		
Mode	Messages	x		x		
	Altered	**********		x		
Note		0 - 127		0 - 127		
Number	: True voice	**********		0 - 127		
Velocity	Note ON	o 9nH,v=1-127		o 9nH,v=1-127		
	Note OFF	x 9nH,v=0		x		
After	Key's	x		x		
Touch	Ch's	x		o		
Pitch Bend		o		o		
	0,32	o		o		Bank Select
	1,5,11	x		o		
	7,10	o		o		
	6,38	o		o		Data Entry
Control	64,66-67	o		o		
	65	x		o		Portamento
Change	72	o		o		Sound Controller
	71,73-74	x		o		Sound Controller
	84	x		o		Portament Cntrl
	91,93-94	o		o		Effect SendLevel
	96-97	x		o		Data Inc,Dec
	98-99	x		o		NRPN LSB,MSB
	100-101	o		o		RPN LSB,MSB
Prog		o 0 - 127		o 0 - 127		
Change	: True #	**********				
System Exclusive		o		o		
	: Song Pos.	x		x		
Common	: Song Sel.	x		x		
	: Tune	x		x		
System	: Clock	o		o		
Real Time	: Commands	o		o		
	: All Sound Off	x		o		
Aux	: Reset All Cntrls	x		o		
	: Local ON/OFF	x		x		
Mes-	: All Notes OFF	x		o (123-127)		
sages	: Active Senseo	o				
	: Reset	x		x		

Mode 1 : OMNI ON, POLY Mode 2 : OMNI ON, MONO o : Yes
Mode 3 : OMNI OFF, POLY Mode 4 : OMNI OFF, MONO x : No

■ PSR-550 OVERALL CIRCUIT DIAGRAM 1/2 (DM)

DM

SYSTEM RESET

DECODER

OR

D-FF

SRAM 1M

DRAM 4M

MAIN ROM 32M

WAVE ROM 64M

DAC

REGULATOR +3.3V

REGULATOR +5V

DC-DC CONVERTER

FDD

to PN 1/5-CN401

to AM-CN800

to MKS5-CN1

to BACK LIGHT ASS'Y

to PN 1/5-CN501

to PN 1/5-CN301

to PN 1/5-CN101

to AM-CN530

to PN 1/5-CN102

to AM-CN100

（マ）: Mylar Capacitor
（セ）: Ceramic Capacitor
（半セ）: Semiconductive Ceramic Capacitor
酸金 : Metal Oxide Film Resistor
Note : See parts list for details of circuit board component parts.

■ PSR-550 OVERALL CIRCUIT DIAGRAM 2/2 (PN, AM, MKS5, MK-L, MK-H)

LCD BACK LIGHT

to DM-CN999

not installed

LCD DRIVER
KS0065B
IC200

LCD
LC100
TYPE-C

LCD DRIVER
IC100
KS0066U-10B

not installed

to DM-CN250

to DM-CN750

to DM-CN960

PN 1/5

to DM-CN650

to DM-CN150

to DM-CN550

PN 2/5
Data dial
ROTARY ENCODER
ENC

PN 3/5
PITCH BEND
PB

AM

HPF

REGULATOR +6V

EQUALIZER AMP

POWER AMP

PHONES/OUTPUT

L
TWEETER
R

L
WOOFER
R

STANDBY SWITCH
STANDBY/ON
STB
to BATTERY
DC IN 10-12V

to DM-CN920

MASTER VOLUME
VOL

PN 4/5

PHOTO CAUPLER

FOOT SWITCH

MIDI IN

MIDI OUT

HOST SELECT

to DM-CN170

INVERTER

HOST I/F
LINE TRANSCEIVE

TO HOST

to DM-CN180

MKS5

CPU
TC1
UPD780022GB

MK-H

MK-L

- AN78L06 (XE924A00)
  REGULATOR +6V
  1: INPUT
  2: GND
  3: OUTPUT
- S81250SGY-Z (XT625A00)
  REGULATOR +5V
  1: GND
  2: INPUT
  3: OUTPUT
- μPC29M33HF (XT333A00)
  REGULATOR +3.3V
  1: INPUT
  2: COMMON
  3: OUTPUT

WARNING

Components having special characteristics are marked ⚠ and must be replaced with parts having specification equal to those originally installed.

（マ）: Mylar Capacitor
（セ）: Ceramic Capacitor
（半セ）: Semiconductive Ceramic Capacitor
Note : See parts list for details of circuit board component parts.

PN: 28CC1-8819394
AM: 28CC1-8813690
MK-H: 28CC1-8812655
MK-L: 28CC1-8812655

PORTATONE

PSR-550

PARTS LIST

■ CONTENTS

OVERALL ASSEMBLY **2**
KEYBOARD ASSEMBLY **5**
ELECTRICAL PARTS ..... **6 – 13**

Notes : DESTINATION ABBREVIATIONS

A :	Australian model	M :	South African model
B :	British model	O :	Chinese model
C :	Canadian model	Q :	South-east Asia model
D :	German model	T :	Taiwan model
E :	European model	U :	U.S.A. model
F :	French model	V :	General export model (110V)
H :	North European model	W:	General export model (220)
I :	Indonesian model	N,X :	General export model
J :	Japanese model	Y :	Export model

■ WARNING

Components having special characteristics are marked ⚠ and must be replaced with parts having specification equal to those originally installed.

- The numbers “QTY” show quantities for each unit.
- The parts with “--” in “**PART NO.**” are not available as spare parts.
- This mark “ } ” in the REMARKS column means these parts are interchangeable.
- The second letter of the shaded ( ) part number is O, not zero.
- The second letter of the shaded ( ) part number is I, not one.

■ OVERALL ASSEMBLY

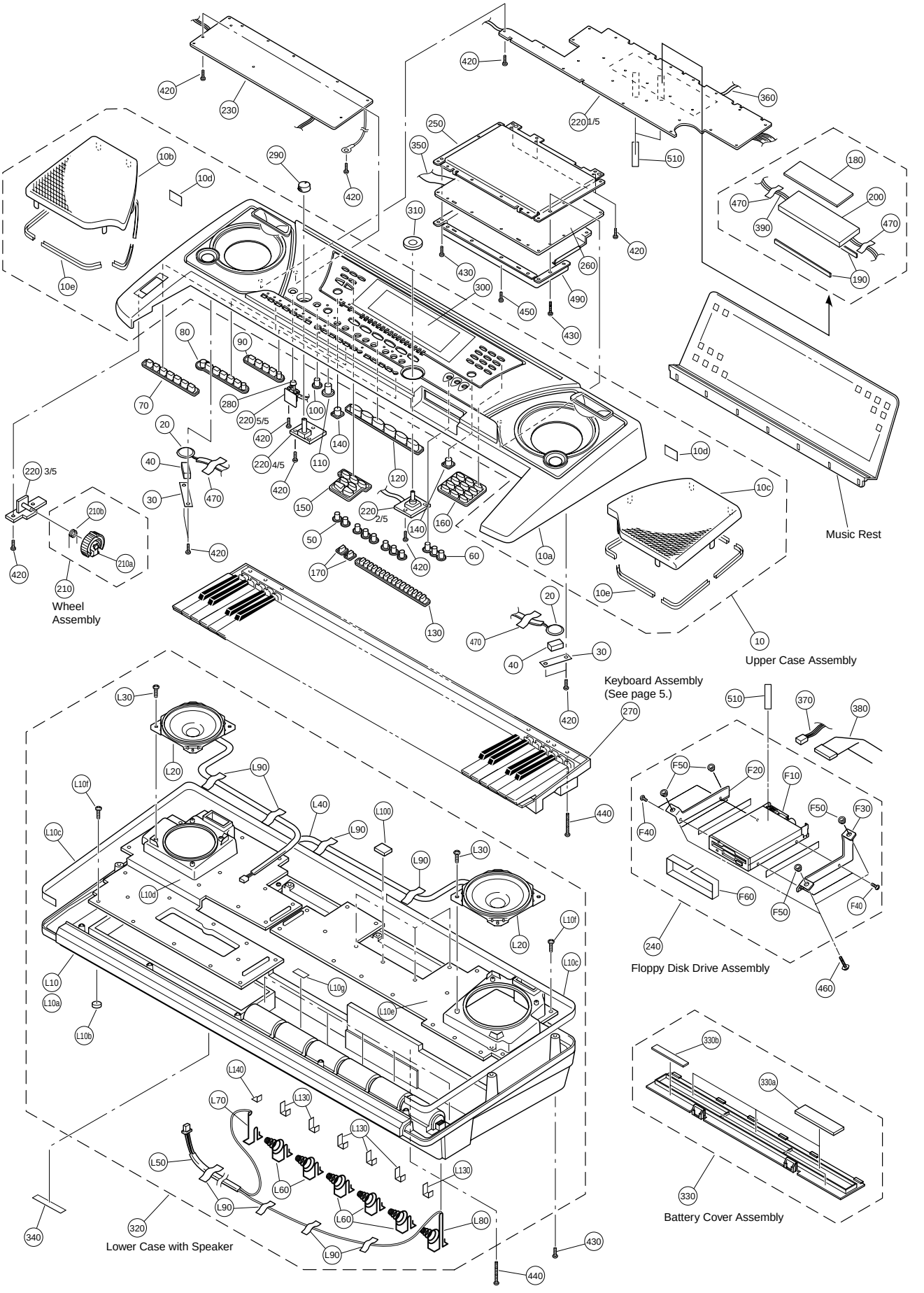

	REF NO.	PART NO.	DESCRIPTION			REMARKS	QTY	RANK
		--	OVERALL ASSEMBLY			PSR-550 (V703480)		
*	10	**V7038900**	Upper Case Assembly					
	10a	--	Upper Case			(V703910)		
*	10b	**V7038700**	Speaker Grille	LEFT				
*	10c	**V7038800**	Speaker Grille	RIGHT				
	10d	**VJ861500**	Vibration-proof Tape	18X25			2	03
	10e	--	Spacer	L100		(V384790)	12	
	20	**XV948A00**	Speaker	3.0cm		TWEETER	2	02
	30	--	Holder			(V364540)	2	
	40	--	Sponge			(V364550)	2	
*	50	**V7044100**	Panel Switch	x1 IVORY		ACMP ON/OFF,FINGERING, TEMPO/TAP,TRANSPOSE,ACMP/ SONG VOLUME,VOICE L/R1/R2	8	
*	60	**V7404800**	Panel Switch	x3 BLUE		LOAD,SAVE,UTILITY		
*	70	**V7044200**	Panel Switch	x7 IVORY/RED		SYNC. STOP,SYNC START, START/STOP,INTRO,MAIN/ AUTO FILL ENDING/rlt.		
*	80	**V7044300**	Panel Switch	x7 IVORY/RED		REGISTRATION MEMORY M/1-4		
*	90	**V7044400**	Panel Switch	x5 IVORY		MULTI PAD 1-4,STOP		
*	100	**V7044500**	Panel Switch	x1 IVORY		DEMO		
*	110	**V7044600**	Panel Switch	x1 RED		RECORD		
*	120	**V7404900**	Panel Switch	x6 BLUE		FANCTION,SONG,STYLE, VOICE L/R1/R2		
*	130	**V7044700**	Panel Switch	x16 IVORY		Display Select TRACK 1-16		
*	140	**V7405400**	Panel Switch	x1 BLUE		DIRECT ACCESS,EXIT	2	
*	150	**V7044800**	Panel Switch	x7 BLACK/IVORY		DSP,FAST/SLOW,TOUCH, SUSTAIN,HARMONY/ECHO, BACK,NEXT		
*	160	**V7378300**	Panel Switch	x12 BLACK		0-9,NO/-,YES/+		
*	170	**V7044900**	Panel Switch	x1 IVORY		VOICE CHANGE,MIXER	2	
*	180	**V7126700**	LCD	TTR				
	190	**V3836800**	Rubber Connector	SS-174W			2	01
*	200	**V7042500**	Back Light Assembly	PT				
	210	--	Wheel Assembly			(VT48770)		
	210a	**VT366400**	Wheel	BLACK		PITCH BEND		03
	210b	**VT440100**	Spring					03
*	220	**V7019600**	Circuit Board	PN (1/5-5/5)				
	230	**V3623000**	Circuit Board	AM				27
	240	--	Floppy Disk Drive Assembly			(V704320)		
	250	--	Shield Box	LOWER		(V375850)		
*	260	**V7019400**	Circuit Board	DM				
*	270	**V7127100**	Keyboard Assembly	16M C61 P2M MKS5				
	280	**VQ218800**	Knob	RED		STANDBY/ON		03
	290	**VU432400**	Knob	BLACK		MASTER VOLUME		01
*	300	**V7045000**	LCD Panel					
	310	**V3833900**	Encoder Knob	IVORY		DATA Dial		02
	320	--	Lower Case with Speaker			(V703900)		
*	330	**V7042300**	Battery Cover Assembly	PT				
	330a	--	Battery Cushion	WHITE		(V710060)	3	
	330b	--	Nonworen Fabric Cloth	10X70X0.5		(V781030)	2	
	340	--	Label	FE		(V703710)		
	350	--	Connector Assembly	MKB 6P		(V381860)		
	360	--	Connector Assembly	LCV 2P		(V381920)		
	370	**V4468500**	Connector Assembly	FDV 3P				02
	380	**V3819400**	Connector Assembly	FDD 34P				03
	390	--	Connector Assembly	BLT PH 6P		(V705780)		
	420	**EP600280**	Bind Head Tapping Screw-P	3.0X8 MFZN2Y			53	01
	430	**EP600300**	Bind Head Tapping Screw-P	3.0X12 MFZN2Y			16	01
	440	**VK228100**	Bind Head Tapping Screw-P	3.0X25 MFZN2Y			6	01
	450	**EP600250**	Bind Head Tapping Screw-B	3.0X8 MFZN2Y			14	01
	460	**V5115200**	Sems Pan Head Screw	SW3.0X10			4	01
	470	**VA126100**	Adhesive Tape	12X50			17	03
	490	--	Shield Box	UPPER		(V375860)		
	510	**VN195400**	Adhesive Tape	12X70			3	03
		--	Floppy Disk Drive Assembly			(V704320)		
	F10	**V6492300**	Floppy Disk Drive	3.5inch DF354H				13
	F20	--	Holder, FDD	LEFT		(V362620)		
	F30	--	Holder, FDD	RIGHT		(V362630)		
	F40	**EG330150**	Bind Head Screw	3.0X5 MFZN2Y			4	01

*: New Parts

RANK: Japan only

	REF NO.	PART NO.	DESCRIPTION			REMARKS	QTY	RANK
	F50	**VA121600**	Bushing				4	01
	F60	--	Adhesive Tape	ECT #590S W=15		(ZL35000)		
		--	Lower Case with Speaker			(V703900)		
*	L10	**V7039300**	Lower Case Assembly					
	L10a	--	Lower Case			(V703940)		
	L10b	**CB043750**	Foot	T1.6 BLACK			5	01
	L10c	--	Cushion	1X15X875		(V704140)	2	
	L10d	--	Speaker Box L			(V704110)		
	L10e	--	Speaker Box R			(V704120)		
	L10f	**EP640500**	Bind Head Tapping Screw-P	4.0X10 MFZN2Y			45	01
	L10g	--	Dust Proof Cloth			(V720600)	6	
	L20	**XT278A00**	Speaker	12.0cm 4 ohm 6W		WOOFER	2	06
	L30	**VB931600**	Bind Head Tapping Screw-P	4.0X8 MFZN2BL			8	01
	L40	--	Connector Assembly	SPW XH 4P		(V381950)		
	L50	--	Connector Assembly	BAT XH 2P		(V705790)		
*	L60	**V7060200**	Spring Terminal				5	
*	L70	**V7060500**	Spring Terminal	(+)				
*	L80	**V7060700**	Spring Terminal	(-)				
	L90	**VA126100**	Adhesive Tape	12X50			11	03
	L100	**VJ861500**	Vibration-proof Tape	18X25			4	03
	L130	--	Nonworen Fabric Cloth	40X13X0.5		(V771130)	6	
	L140	--	Nonworen Fabric Cloth	13X13X0.5		(V771140)		
			ACCESSORIES					
		VU469500	Music Rest					07
*		**V7037800**	Floppy Disk	3.5inch				
*		**V6952000**	AC Adapter	PA-6(B) J		J		
		VZ428400	AC Adapter	PA-6 CHN		O		16
*		**V7038000**	Japanese Guide Sheet			J		
*		**V7038100**	Chinese Guide Sheet			O		

*: New Parts

RANK: Japan only

■ KEYBOARD ASSEMBLY

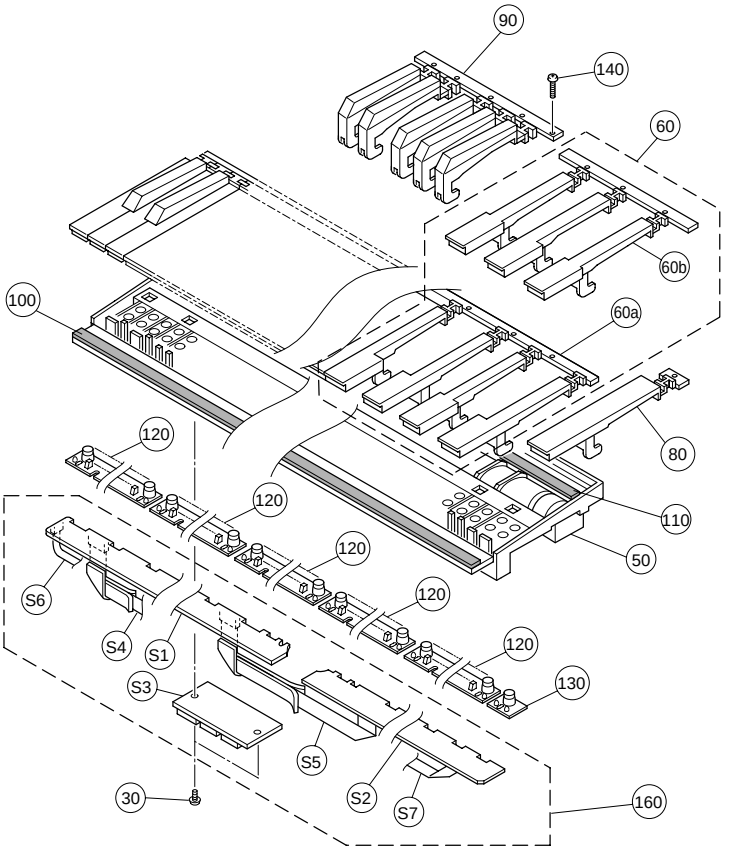

	REF NO.	PART NO.	DESCRIPTION			REMARKS	QTY	RANK
*		**V7127100**	KEYBOARD ASSEMBLY	16M C61 P2M MKS5		PSR-550		
	30	**EP600280**	Bind Head Tapping Screw-P	3.0X8 MFZN2Y			2	01
	30	**EP630220**	Bind Head Tapping Screw-P	3.0X8 MFZN2BL			2	01
	50	**--**	Frame	C61		(VS15380)		
	50	**VU328600**	Frame	C61 16M				10
	50	**--**	Frame	C61 16M,L		(V676090)		
	60	**VH1809C0**	White Key	16L CEGBDFA			5	03
	60a	**--**	White Key	16L CEGB		(VH18090)	5	03
	60b	**--**	White Key	16L DFA		(VH18100)	5	03
	80	**VH181100**	White Key	16L C'				01
	90	**VH181200**	Black Key	16L #			5	03
	100	**VH181300**	Felt					03
	110	**VH181400**	Rubber Sheet					01
	120	**VU328400**	Rubber Contact	16M OCT 2M 12KEYS			5	06
	130	**VU328500**	Rubber Contact	16M C' 2M 1KEY				05
	140	**EP600310**	Bind Head Tapping Screw-P	3.0X16 MFZN2Y			21	01
	140	**VB205200**	Bind Head Tapping Screw-P	3.0X16 MFZN2BL			21	01
	140	**VS756700**	Bind Head Tapping Screw-P	3.0X16 MFZN2B			21	01
	150	**TX920280**	Grease	G-31KA 50g				10
	160	**--**	Circuit Board Assembly	MKS5 TY KBD SW		(V712720)		
	170	**--**	Nonworen Fabric Cloth	40X13X0.5		(V771130)		
		--	Circuit Board Assembly	MKS5 TY KBD SW		(V712720)		
	S1	**VV583800**	Circuit Board	MK-L				09
	S2	**VV583900**	Circuit Board	MK-H				09
*	S3	**V7112200**	Circuit Board	MKS5				
	S4	**VV583100**	Cable	MK-A 12P				03
	S5	**VV583600**	Cable	MK-B 12P				03
	S6	**VV583500**	Cable	MK-C 7P				03
	S7	**VV583700**	Cable	MK-D 5P				03
	S8	**--**	Sponge	A 16M		(VV61890)	2	
	S9	**--**	Sponge	B 16M		(VV61900)	2	
	S10	**--**	Adhesive Tape	C 12		(VV61910)		
	S11	**--**	Adhesive Tape	D 12		(VV61920)	3	

*: New Parts

RANK: Japan only

■ ELECTRICAL PARTS

	REF NO.	PART NO.	DESCRIPTION			REMARKS	QTY	RANK
			ELECTRICAL PARTS			PSR-550		
		V3623000	Circuit Board	AM		(XV935C0)		27
*		**V7019400**	Circuit Board	DM		(XZ670D0)		
		VV583900	Circuit Board	MK-H		(XR565C0)		09
		VV583800	Circuit Board	MK-L		(XR564C0)		09
*		**V7112200**	Circuit Board	MKS5		(XZ594A0)		
*		**V7019600**	Circuit Board	PN		(XV934B0)		
		V3623000	Circuit Board	AM		(XV935C0)		27
		VV856400	Heat Sink					05
		--	Jumper Wire	0.55		(VA07890)		
	C0100	**VC694800**	Semiconductive Cera. Cap.	0.1000 25V Z				01
	C0111	**UA654680**	Mylar Capacitor	0.0680 50V J				02
	-0113	**UA654680**	Mylar Capacitor	0.0680 50V J				02
	C0121	**UA654680**	Mylar Capacitor	0.0680 50V J				02
	-0123	**UA654680**	Mylar Capacitor	0.0680 50V J				02
	C0301	**UR848100**	Electrolytic Cap.	100.00 25.0V				01
	C0302	**UR848100**	Electrolytic Cap.	100.00 25.0V				01
	C0303	**UR837100**	Electrolytic Cap.	10.00 16.0V				01
	C0311	**UA654100**	Mylar Capacitor	0.0100 50V J				01
	C0312	**UN837100**	Electrolytic Cap.-BP	10.00 16.0V				01
	C0321	**UA654100**	Mylar Capacitor	0.0100 50V J				01
	C0322	**UN837100**	Electrolytic Cap.-BP	10.00 16.0V				01
	C0354	**UR866470**	Electrolytic Cap.	4.70 50.0V				01
	C0364	**UR866470**	Electrolytic Cap.	4.70 50.0V				01
	C0370	**VC694800**	Semiconductive Cera. Cap.	0.1000 25V Z				01
	C0371	**VR168700**	Monolithic Mylar Capacitor	ECQ-V1H224JL3				01
	C0372	**UA654220**	Mylar Capacitor	0.0220 50V J				01
	C0373	**UA654100**	Mylar Capacitor	0.0100 50V J				01
	C0374	**UA654270**	Mylar Capacitor	0.0270 50V J				01
	C0375	**UA653470**	Mylar Capacitor	4700P 50V J				01
	C0376	**UA654150**	Mylar Capacitor	0.0150 50V J				01
	C0377	**FG613150**	Ceramic Capacitor-B	1500P 50V K				01
	C0380	**UR837470**	Electrolytic Cap.	47.00 16.0V				01
	C0381	**VR168700**	Monolithic Mylar Capacitor	ECQ-V1H224JL3				01
	C0382	**UA654220**	Mylar Capacitor	0.0220 50V J				01
	C0383	**UA654100**	Mylar Capacitor	0.0100 50V J				01
	C0384	**UA654270**	Mylar Capacitor	0.0270 50V J				01
	C0385	**UA653470**	Mylar Capacitor	4700P 50V J				01
	C0386	**UA654150**	Mylar Capacitor	0.0150 50V J				01
	C0387	**FG613150**	Ceramic Capacitor-B	1500P 50V K				01
	C0401	**UR848100**	Electrolytic Cap.	100.00 25.0V				01
	C0402	**VC694800**	Semiconductive Cera. Cap.	0.1000 25V Z				01
	C0403	**UR865470**	Electrolytic Cap.	0.47 50.0V				01
	C0404	**UR827330**	Electrolytic Cap.	33.00 10.0V				01
	C0405	**UR828100**	Electrolytic Cap.	100.00 10.0V				01
	C0411	**VT757800**	Monolithic Ceramic Cap.	1.000 25V Z				01
	C0411	**V6490000**	Monolithic Ceramic Cap.	1.000 25V Z				01
	C0412	**FG612470**	Ceramic Capacitor-B	470P 50V K				01
	C0421	**VT757800**	Monolithic Ceramic Cap.	1.000 25V Z				01
	C0421	**V6490000**	Monolithic Ceramic Cap.	1.000 25V Z				01
	C0422	**FG612470**	Ceramic Capacitor-B	470P 50V K				01
	C0451	**UA654470**	Mylar Capacitor	0.0470 50V J				01
	C0452	**UA654470**	Mylar Capacitor	0.0470 50V J				01
	C0461	**UA654470**	Mylar Capacitor	0.0470 50V J				01
	C0462	**UA654470**	Mylar Capacitor	0.0470 50V J				01
	C0471	**UR837470**	Electrolytic Cap.	47.00 16.0V				01
	C0481	**UR837470**	Electrolytic Cap.	47.00 16.0V				01
	C0501	**VC694800**	Semiconductive Cera. Cap.	0.1000 25V Z				01
	-0504	**VC694800**	Semiconductive Cera. Cap.	0.1000 25V Z				01
	C0505	**VT848900**	Electrolytic Cap.	6800 25.0V				03
	C0506	**VC694800**	Semiconductive Cera. Cap.	0.1000 25V Z				01
	C0610	**FG644100**	Ceramic Capacitor-F	0.0100 50V Z				01
	C0611	**FG644100**	Ceramic Capacitor-F	0.0100 50V Z				01
	C0701	**FG644100**	Ceramic Capacitor-F	0.0100 50V Z				01
	C0702	**UR837100**	Electrolytic Cap.	10.00 16.0V				01
	C0801	**UR837100**	Electrolytic Cap.	10.00 16.0V				01
	C0802	**FG612100**	Ceramic Cap.-B	100P 50V K				01
	C0810	**FG644100**	Ceramic Capacitor-F	0.0100 50V Z				01
	C0811	**UN817470**	Electrolytic Cap.-BP	47.00 6.3V				01

*: New Parts

RANK: Japan only

	REF NO.	PART NO.	DESCRIPTION			REMARKS	QTY	RANK
	C0812	**VC694800**	Semiconductive Cera. Cap.	0.1000 25V Z				01
	CN100	**VI878200**	Cable Holder	51048 4P TE				01
	CN390	**VK024900**	Wire Trap	52147 5P TE				01
	CN480	**LB918040**	Base Post Connector	XH 4P TE				01
	CN510	**LB918020**	Base Post Connector	XH 2P TE				01
	CN520	**VF728300**	Wire Trap	52147 6P TE				01
	CN530	**VI878300**	Cable Holder	51048 5P TE				01
	CN800	**VI878500**	Cable Holder	51048 7P TE				01
⚠	D0501	**VL723600**	Diode	20E1-FC4				01
⚠	D0502	**VL723600**	Diode	20E1-FC4				01
	D0610	**VB941200**	Diode	1SS133,1SS176				01
	-0814	**VB941200**	Diode	1SS133,1SS176				01
	IC100	**XF633A00**	IC	UPC4572HA		OP AMP		02
	IC300	**XE924A00**	IC	AN78L06		REGULATOR +6V		01
	IC370	**XU911A00**	IC	M5243AP06		EQUALIZER		03
	IC400	**XQ619A00**	IC	LA4705NA 17W BTL		POWER AMP.		05
	IC700	**XU463A00**	IC	SN75C1168N		LINE TRANSCEIVER		05
	IC810	**IG142200**	IC	TC74HCU04AP		INVERTER		02
	IC810	**IG142250**	IC	SN74HCU04N				01
	J0411	**--**	Jumper Wire	0.55		(VA07890)		
	J0412	**--**	Jumper Wire	0.55		(VA07890)		
	J0421	**--**	Jumper Wire	0.55		(VA07890)		
	J0422	**--**	Jumper Wire	0.55		(VA07890)		
	J0501	**--**	Jumper Wire	0.55		(VA07890)		
	J0502	**--**	Jumper Wire	0.55		(VA07890)		
	J0503	**--**	Jumper Wire	0.55		(VA07890)		
	JK490	**LB101870**	Phone Jack	YKB21-5006		PHONES/OUTPUT		03
⚠	JK500	**V6557600**	Connector	HTJ-020-05AZ		DC-IN 10-12V		
	JK610	**VJ107200**	DIN Connector	5P YKF51-5050		MIDI IN		01
	JK620	**VJ107200**	DIN Connector	5P YKF51-5050		MIDI OUT		01
	JK700	**VM761000**	DIN Connector	DIN 8P MD-S810		TO HOST		03
	JK900	**VB312600**	Phone Jack	YKB21-5012 BLACK		FOOT SWITCH		02
	L0471	**VB835000**	Coil	FL5R200QNT 20uH				01
	L0471	**V2889500**	Choke Coil	R-5C.20U 20uH				01
	L0471	**V2993400**	Choke Coil	R-5C.20U 20uH				01
	L0481	**VB835000**	Coil	FL5R200QNT 20uH				01
	L0481	**V2889500**	Choke Coil	R-5C.20U 20uH				01
	L0481	**V2993400**	Choke Coil	R-5C.20U 20uH				01
	L0491	**VB835000**	Coil	FL5R200QNT 20uH				01
	L0491	**V2889500**	Choke Coil	R-5C.20U 20uH				01
	L0491	**V2993400**	Choke Coil	R-5C.20U 20uH				01
	L0611	**VB835000**	Coil	FL5R200QNT 20uH				01
	L0611	**V2889500**	Choke Coil	R-5C.20U 20uH				01
	L0611	**V2993400**	Choke Coil	R-5C.20U 20uH				01
	L0612	**VB835000**	Coil	FL5R200QNT 20uH				01
	L0612	**V2889500**	Choke Coil	R-5C.20U 20uH				01
	L0612	**V2993400**	Choke Coil	R-5C.20U 20uH				01
	L0621	**VB835000**	Coil	FL5R200QNT 20uH				01
	L0621	**V2889500**	Choke Coil	R-5C.20U 20uH				01
	L0621	**V2993400**	Choke Coil	R-5C.20U 20uH				01
	L0622	**VB835000**	Coil	FL5R200QNT 20uH				01
	L0622	**V2889500**	Choke Coil	R-5C.20U 20uH				01
	L0622	**V2993400**	Choke Coil	R-5C.20U 20uH				01
	L0701	**GE300670**	Ferrite Bead	BL02RN2-R62T4				02
	-0707	**GE300670**	Ferrite Bead	BL02RN2-R62T4				02
	L0901	**VB835000**	Coil	FL5R200QNT 20uH				01
	-0903	**VB835000**	Coil	FL5R200QNT 20uH				01
	L0901	**V2889500**	Choke Coil	R-5C.20U 20uH				01
	-0903	**V2889500**	Choke Coil	R-5C.20U 20uH				01
	L0901	**V2993400**	Choke Coil	R-5C.20U 20uH				01
	-0903	**V2993400**	Choke Coil	R-5C.20U 20uH				01
⚠	LF501	**VI486800**	Line Filter	SU10VD-20020				03
	PC610	**VG181900**	Photo Coupler	PC-900V				03
	R0111	**HF757150**	Carbon Resistor	15.0K 1/4 J				01
	R0112	**HF756270**	Carbon Resistor	2.7K 1/4 J				01
	R0113	**HF758390**	Carbon Resistor	390.0K 1/4 J				01
	R0114	**--**	Jumper Wire	0.55		(VA07890)		
	R0121	**HF757150**	Carbon Resistor	15.0K 1/4 J			01	
	R0122	**HF756270**	Carbon Resistor	2.7K 1/4 J			01	
	R0123	**HF758390**	Carbon Resistor	390.0K 1/4 J			01	

※: New Parts

RANK: Japan only

REF NO.	PART NO.	DESCRIPTION			REMARKS	QTY	RANK
R0124	--	Jumper Wire	0.55		(VA07890)		
R0300	**HF754470**	Carbon Resistor	47.0 1/4 J				01
R0301	**HF756220**	Carbon Resistor	2.2K 1/4 J				01
R0302	**HF756220**	Carbon Resistor	2.2K 1/4 J				01
R0311	**HF755150**	Carbon Resistor	150.0 1/4 J				01
R0321	**HF755150**	Carbon Resistor	150.0 1/4 J				01
R0352	**HF757100**	Carbon Resistor	10.0K 1/4 J				01
R0353	**HF755560**	Carbon Resistor	560.0 1/4 J				01
R0362	**HF757100**	Carbon Resistor	10.0K 1/4 J				01
R0363	**HF755560**	Carbon Resistor	560.0 1/4 J				01
R0370	**HF756270**	Carbon Resistor	2.7K 1/4 J				01
R0371	--	Jumper Wire	0.55		(VA07890)		
R0372	**HF757220**	Carbon Resistor	22.0K 1/4 J				01
R0373	**HF755680**	Carbon Resistor	680.0 1/4 J				01
R0374	**HF757180**	Carbon Resistor	18.0K 1/4 J				01
R0375	**HF755470**	Carbon Resistor	470.0 1/4 J				01
R0376	**HF757180**	Carbon Resistor	18.0K 1/4 J				01
R0377	**HF756270**	Carbon Resistor	2.7K 1/4 J				01
R0380	**HF756270**	Carbon Resistor	2.7K 1/4 J				01
R0381	--	Jumper Wire	0.55		(VA07890)		
R0382	**HF757220**	Carbon Resistor	22.0K 1/4 J				01
R0383	**HF755680**	Carbon Resistor	680.0 1/4 J				01
R0384	**HF757180**	Carbon Resistor	18.0K 1/4 J				01
R0385	**HF755470**	Carbon Resistor	470.0 1/4 J				01
R0386	**HF757180**	Carbon Resistor	18.0K 1/4 J				01
R0387	**HF756270**	Carbon Resistor	2.7K 1/4 J				01
R0401	**HF757100**	Carbon Resistor	10.0K 1/4 J				01
R0411	**HF757180**	Carbon Resistor	18.0K 1/4 J				01
R0412	**HF756680**	Carbon Resistor	6.8K 1/4 J				01
R0421	**HF757180**	Carbon Resistor	18.0K 1/4 J				01
R0422	**HF756680**	Carbon Resistor	6.8K 1/4 J				01
R0451	**HF753220**	Carbon Resistor	2.2 1/4 J				01
R0452	**HF753220**	Carbon Resistor	2.2 1/4 J				01
R0461	**HF753220**	Carbon Resistor	2.2 1/4 J				01
R0462	**HF753220**	Carbon Resistor	2.2 1/4 J				01
R0471	**HF755100**	Carbon Resistor	100.0 1/4 J				01
R0472	**HF755330**	Carbon Resistor	330.0 1/4 J				01
R0481	**HF755100**	Carbon Resistor	100.0 1/4 J				01
R0482	**HF755330**	Carbon Resistor	330.0 1/4 J				01
R0611	**HF755220**	Carbon Resistor	220.0 1/4 J				01
R0612	**HF756100**	Carbon Resistor	1.0K 1/4 J				01
R0621	**HF755220**	Carbon Resistor	220.0 1/4 J				01
R0622	**HF755220**	Carbon Resistor	220.0 1/4 J				01
R0623	**HF756150**	Carbon Resistor	1.5K 1/4 J				01
R0624	**HF757220**	Carbon Resistor	22.0K 1/4 J				01
R0625	**HF757220**	Carbon Resistor	22.0K 1/4 J				01
R0626	**HF757100**	Carbon Resistor	10.0K 1/4 J				01
R0701	**HF757100**	Carbon Resistor	10.0K 1/4 J				01
R0702	**HF757100**	Carbon Resistor	10.0K 1/4 J				01
R0703	**HF755220**	Carbon Resistor	220.0 1/4 J				01
R0704	**HF755220**	Carbon Resistor	220.0 1/4 J				01
R0705	**HF757100**	Carbon Resistor	10.0K 1/4 J				01
R0706	**HF757100**	Carbon Resistor	10.0K 1/4 J				01
R0711	**HF757100**	Carbon Resistor	10.0K 1/4 J				01
R0801	**HF755100**	Carbon Resistor	100.0 1/4 J				01
R0802	**HF755100**	Carbon Resistor	100.0 1/4 J				01
R0803	**HF757100**	Carbon Resistor	10.0K 1/4 J				01
-0806	**HF757100**	Carbon Resistor	10.0K 1/4 J				01
R0811	**HF755100**	Carbon Resistor	100.0 1/4 J				01
R0812	**HF755100**	Carbon Resistor	100.0 1/4 J				01
R0901	**HF757470**	Carbon Resistor	47.0K 1/4 J				01
R0902	**HF757470**	Carbon Resistor	47.0K 1/4 J				01
SW800	**VQ665200**	Slide Switch	SSSF144-S06N-0		HOST SELECT		03
⚠ TH501	**VV458000**	Protector Switch	RUE250 2.50A 30V		Overcurrent protection		03
TR621	**VS885800**	Transistor	2SC				01
TR622	**VS885800**	Transistor	2SC				01
W-ANA	--	Connector Assembly	ANA 4P		(V381820)		
W-DMV	--	Connector Assembly	DMV 5P		(V381840)		
W-EP2	--	Connector Assembly	EP2 L=160		(V457700)		
W-MID	--	Connector Assembly	MID 7P		(V381870)		

✻: New Parts

RANK: Japan only

	REF NO.	PART NO.	DESCRIPTION			REMARKS	QTY	RANK
*		**V7019400**	Circuit Board	DM		(XZ670D0)		
		EP600190	Bind Head Tapping Screw-B	3.0X8 MFZN2BL			2	01
	C0101	**VC694800**	Semiconductive Cera. Cap.	0.1000 25V Z				01
	C0102	**UR837100**	Electrolytic Cap.	10.00 16.0V				01
	C0103	**VC694800**	Semiconductive Cera. Cap.	0.1000 25V Z				01
	C0104	**VC694800**	Semiconductive Cera. Cap.	0.1000 25V Z				01
	C0105	**UR837100**	Electrolytic Cap.	10.00 16.0V				01
	C0108	**FG612470**	Ceramic Capacitor-B	470P 50V K				01
	C0109	**FG612470**	Ceramic Capacitor-B	470P 50V K				01
	C0124	**FG612100**	Ceramic Cap.-B	100P 50V K				01
	C0125	**VC694800**	Semiconductive Cera. Cap.	0.1000 25V Z				01
	C0126	**VC694800**	Semiconductive Cera. Cap.	0.1000 25V Z				01
	C0176	**FG612100**	Ceramic Cap.-B	100P 50V K				01
	C0181	**VC694800**	Semiconductive Cera. Cap.	0.1000 25V Z				01
	C0182	**FG612470**	Ceramic Capacitor-B	470P 50V K				01
	C0183	**FG612470**	Ceramic Capacitor-B	470P 50V K				01
	C0184	**FG612100**	Ceramic Cap.-B	100P 50V K				01
	C0185	**FG612100**	Ceramic Cap.-B	100P 50V K				01
	C0191	**FG612100**	Ceramic Cap.-B	100P 50V K				01
	C0201	**VC694800**	Semiconductive Cera. Cap.	0.1000 25V Z				01
	-0203	**VC694800**	Semiconductive Cera. Cap.	0.1000 25V Z				01
	C0204	**UR828100**	Electrolytic Cap.	100.00 10.0V				01
	C0207	**VC694800**	Semiconductive Cera. Cap.	0.1000 25V Z				01
	C0208	**FG651270**	Ceramic Capacitor-SL	27P 50V J				01
	C0209	**VC694800**	Semiconductive Cera. Cap.	0.1000 25V Z				01
	C0211	**VC694800**	Semiconductive Cera. Cap.	0.1000 25V Z				01
	C0231	**VC694800**	Semiconductive Cera. Cap.	0.1000 25V Z				01
	C0251	**UR847100**	Electrolytic Cap.	10.00 25.0V				01
	C0252	**VC694800**	Semiconductive Cera. Cap.	0.1000 25V Z				01
	-0261	**VC694800**	Semiconductive Cera. Cap.	0.1000 25V Z				01
	C0271	**UR828100**	Electrolytic Cap.	100.00 10.0V				01
	C0272	**VC694800**	Semiconductive Cera. Cap.	0.1000 25V Z				01
	C0273	**UR837100**	Electrolytic Cap.	10.00 16.0V				01
	C0274	**UR866470**	Electrolytic Cap.	4.70 50.0V				01
	C0275	**VC694800**	Semiconductive Cera. Cap.	0.1000 25V Z				01
	C0277	**UA654220**	Mylar Capacitor	0.0220 50V J				01
	C0283	**UR837100**	Electrolytic Cap.	10.00 16.0V				01
	C0284	**UR866470**	Electrolytic Cap.	4.70 50.0V				01
	C0285	**VC694800**	Semiconductive Cera. Cap.	0.1000 25V Z				01
	C0287	**UA654220**	Mylar Capacitor	0.0220 50V J				01
	C0291	**UR828100**	Electrolytic Cap.	100.00 10.0V				01
	C0292	**VC694800**	Semiconductive Cera. Cap.	0.1000 25V Z				01
	C0293	**UR828100**	Electrolytic Cap.	100.00 10.0V				01
	C0301	**VC694800**	Semiconductive Cera. Cap.	0.1000 25V Z				01
	C0302	**UR837100**	Electrolytic Cap.	10.00 16.0V				01
	C0311	**VC694800**	Semiconductive Cera. Cap.	0.1000 25V Z				01
	C0331	**VC694800**	Semiconductive Cera. Cap.	0.1000 25V Z				01
	C0351	**VC694800**	Semiconductive Cera. Cap.	0.1000 25V Z				01
	C0361	**VC694800**	Semiconductive Cera. Cap.	0.1000 25V Z				01
	C0501	**VC694800**	Semiconductive Cera. Cap.	0.1000 25V Z				01
	C0551	**VC694800**	Semiconductive Cera. Cap.	0.1000 25V Z				01
	C0601	**VC694800**	Semiconductive Cera. Cap.	0.1000 25V Z				01
	C0611	**VC694800**	Semiconductive Cera. Cap.	0.1000 25V Z				01
	C0701	**VC694800**	Semiconductive Cera. Cap.	0.1000 25V Z				01
	C0751	**UR837100**	Electrolytic Cap.	10.00 16.0V				01
	C0752	**FG612100**	Ceramic Cap.-B	100P 50V K				01
	C0753	**FG612100**	Ceramic Cap.-B	100P 50V K				01
	C0801	**VC694800**	Semiconductive Cera. Cap.	0.1000 25V Z				01
	C0802	**UR837100**	Electrolytic Cap.	10.00 16.0V				01
	C0803	**VC694800**	Semiconductive Cera. Cap.	0.1000 25V Z				01
	C0901	**FG644100**	Ceramic Capacitor-F	0.0100 50V Z				01
	C0902	**UR848100**	Electrolytic Cap.	100.00 25.0V				01
	C0903	**UR839100**	Electrolytic Cap.	1000 16.0V				01
	C0904	**FG612330**	Ceramic Capacitor-B	330P 50V K				01
	C0911	**FG644100**	Ceramic Capacitor-F	0.0100 50V Z				01
	C0912	**FG644100**	Ceramic Capacitor-F	0.0100 50V Z				01
	C0913	**UR847100**	Electrolytic Cap.	10.00 25.0V				01
	C0914	**UR828100**	Electrolytic Cap.	100.00 10.0V				01
	C0931	**FG644100**	Ceramic Capacitor-F	0.0100 50V Z				01

*: New Parts

RANK: Japan only

	REF NO.	PART NO.	DESCRIPTION			REMARKS	QTY	RANK
	C0998	**VC694800**	Semiconductive Cera. Cap.	0.1000 25V Z				01
	C0999	**VC694800**	Semiconductive Cera. Cap.	0.1000 25V Z				01
	CA151	**VH483900**	Ceramic Capacitor Array	100P 50V M				01
	CA152	**VK994900**	Ceramic Capacitor Array	100P 50V M				01
*	CA171	**V4654200**	Ceramic Capacitor Array	470P 50V M				
	CA551	**VH285600**	Ceramic Capacitor Array	470P 50V M				02
	CA651	**VH285600**	Ceramic Capacitor Array	470P 50V M				02
	CN150	**VK025500**	Wire Trap	52147 11P TE				01
	CN170	**VK025100**	Wire Trap	52147 7P TE				01
	CN180	**VF728300**	Wire Trap	52147 6P TE				01
	CN250	**VK024800**	Wire Trap	52147 4P TE				01
	CN550	**VF728200**	Wire Trap	52147 10P TE				01
	CN650	**VK025200**	Wire Trap	52147 8P TE				01
	CN750	**VK025600**	Wire Trap	52147 12P TE				01
	CN850	**VQ391300**	Connector	34P TE				03
	CN850	**V3858700**	Connector Header	302A 34P TE				05
	CN920	**VK024900**	Wire Trap	52147 5P TE				01
	CN950	**LB918030**	Base Post Connector	XH 3P TE				01
	CN960	**LB918020**	Base Post Connector	XH 2P TE				01
	CN999	**VB390200**	Connector Base Post	PH 6P TE				01
	D0901	**V2320300**	Diode	RK33				01
	D0911	**VB941200**	Diode	1SS133,1SS176				01
	D0912	**VB481900**	Diode	11ES4				01
	D0931	**VB941200**	Diode	1SS133,1SS176				01
*	IC100	**XZ787100**	IC	HD6437042AF90F		CPU		
	IC190	**XR902A00**	IC	IC-PST591D-2		SYSTEM RESET		02
	IC200	**XU947C00**	IC	HG73C205AFD		TONE GENERATOR (SWX00B)		09
*	IC230	**XZ786100**	IC			MASK ROM 64M WAVE		
	IC250	**XT625A00**	IC	S-81250SGY-Z		REGULATOR +5V		02
	IC260	**XT810A00**	IC	MSM514260C-60TS-K		DRAM 4M		16
	IC260	**XW125A00**	IC	SDM4260CLTM-6S				08
	IC270	**XU829A00**	IC	PCM1716E		DAC		06
	IC290	**XT333A00**	IC	UPC29M33HF		REGULATOR		03
	IC300	**XT810A00**	IC	MSM514260C-60TS-K		DRAM 4M		16
	IC300	**XW125A00**	IC	SDM4260CLTM-6S				08
*	IC310	**XZ785200**	IC			MASK ROM 32M PROGRAM		
	IC330	**XT138A00**	IC	UPD431000AGW-70LL		SRAM 1M		07
	IC330	**XV976A00**	IC	M5M51008CFP-70H				07
	IC350	**IR013800**	IC	TC74HC138AP		DECODER		02
	IC350	**IR013850**	IC	SN74HC138N				05
	IC360	**IR003200**	IC	TC74HC32AP		OR		03
	IC360	**IR003250**	IC	SN74HC32N				03
	IC500	**IR037400**	IC	TC74HC374AP		D-FF		06
	IC500	**IR037450**	IC	SN74HC374N				06
	IC600	**IR013800**	IC	TC74HC138AP		DECODER		02
	IC600	**IR013850**	IC	SN74HC138N				05
	IC700	**IR037400**	IC	TC74HC374AP		D-FF		06
	IC700	**IR037450**	IC	SN74HC374N				06
	IC800	**XI939A00**	IC	HD63266F		FDC		09
	IC900	**XV856A00**	IC	M5291P		DC-DC CONVERTER		03
	IC910	**XT625A00**	IC	S-81250SGY-Z		REGULATOR +5V		02
	IC999	**IR007400**	IC	TC74HC74AP		D-FF		04
	IC999	**IR007450**	IC	SN74HC74N				04
	IS310	**VK863100**	IC Socket	DICF-42CS-E				03
	J0003	--	Jumper Wire	0.55		(VA07890)		
	L0252	**VM898600**	Ferrite Bead	EXC-ELDR35V				01
	L0254	**VM898600**	Ferrite Bead	EXC-ELDR35V				01
	L0851	**VM898600**	Ferrite Bead	EXC-ELDR35V				01
	-0856	**VM898600**	Ferrite Bead	EXC-ELDR35V				01
	L0901	**VZ060700**	Choke Coil	220U ELC15E221 15E				05
	L0921	**VN381200**	Coil	SNT-D20TF 10uH				03
	L0922	**VN381200**	Coil	SNT-D20TF 10uH				03
	R0107	**HF755560**	Carbon Resistor	560.0 1/4 J				01
	R0108	**HF755220**	Carbon Resistor	220.0 1/4 J				01
	R0109	**HF756330**	Carbon Resistor	3.3K 1/4 J				01
	R0111	--	Jumper Wire	0.55		(VA07890)		
	R0113	--	Jumper Wire	0.55		(VA07890)		
	R0115	**HF755220**	Carbon Resistor	220.0 1/4 J				01
	R0116	**HF757470**	Carbon Resistor	47.0K 1/4 J				01
	R0117	**HF757470**	Carbon Resistor	47.0K 1/4 J				01

*: New Parts

RANK: Japan only

	REF NO.	PART NO.	DESCRIPTION			REMARKS	QTY	RANK
	R0121	**HF757470**	Carbon Resistor	47.0K 1/4 J				01
	-0123	**HF757470**	Carbon Resistor	47.0K 1/4 J				01
	R0124	**HF755100**	Carbon Resistor	100.0 1/4 J				01
	R0125	**HF756100**	Carbon Resistor	1.0K 1/4 J				01
	R0126	**HF756100**	Carbon Resistor	1.0K 1/4 J				01
	R0127	**HF758470**	Carbon Resistor	470.0K 1/4 J				01
	R0128	**HF758470**	Carbon Resistor	470.0K 1/4 J				01
	R0172	**HF757100**	Carbon Resistor	10.0K 1/4 J				01
	R0173	**HF757100**	Carbon Resistor	10.0K 1/4 J				01
	R0174	**HF756100**	Carbon Resistor	1.0K 1/4 J				01
	-0176	**HF756100**	Carbon Resistor	1.0K 1/4 J				01
	R0177	**HF757470**	Carbon Resistor	47.0K 1/4 J				01
	R0182	**HF756100**	Carbon Resistor	1.0K 1/4 J				01
	R0183	**HF756100**	Carbon Resistor	1.0K 1/4 J				01
	R0184	**HF755100**	Carbon Resistor	100.0 1/4 J				01
	R0185	**HF755100**	Carbon Resistor	100.0 1/4 J				01
	R0186	**HF757470**	Carbon Resistor	47.0K 1/4 J				01
	R0187	**HF757470**	Carbon Resistor	47.0K 1/4 J				01
	R0191	**HF757100**	Carbon Resistor	10.0K 1/4 J				01
	R0192	**HF757100**	Carbon Resistor	10.0K 1/4 J				01
	R0201	**HF754680**	Carbon Resistor	68.0 1/4 J				01
	R0211	**HF757470**	Carbon Resistor	47.0K 1/4 J				01
	R0212	**HF757470**	Carbon Resistor	47.0K 1/4 J				01
	R0251	**HF754330**	Carbon Resistor	33.0 1/4 J				01
	R0253	**HF756100**	Carbon Resistor	1.0K 1/4 J				01
	R0271	**HF755220**	Carbon Resistor	220.0 1/4 J				01
	-0274	**HF755220**	Carbon Resistor	220.0 1/4 J				01
	R0275	--	Jumper Wire	0.55		(VA07890)		
	R0276	**HF755180**	Carbon Resistor	180.0 1/4 J				01
	R0286	**HF755180**	Carbon Resistor	180.0 1/4 J				01
	R0351	**HF755100**	Carbon Resistor	100.0 1/4 J				01
	R0353	**HF755100**	Carbon Resistor	100.0 1/4 J				01
	-0355	**HF755100**	Carbon Resistor	100.0 1/4 J				01
	R0511	**HF754470**	Carbon Resistor	47.0 1/4 J				01
	-0515	**HF754470**	Carbon Resistor	47.0 1/4 J				01
	R0552	**HF757100**	Carbon Resistor	10.0K 1/4 J				01
	R0553	**HF756100**	Carbon Resistor	1.0K 1/4 J				01
	R0554	**HF756100**	Carbon Resistor	1.0K 1/4 J				01
	R0555	**HF757470**	Carbon Resistor	47.0K 1/4 J				01
	R0556	**HF757470**	Carbon Resistor	47.0K 1/4 J				01
	R0711	**HF755220**	Carbon Resistor	220.0 1/4 J				01
	-0720	**HF755220**	Carbon Resistor	220.0 1/4 J				01
	R0801	**HF757100**	Carbon Resistor	10.0K 1/4 J				01
	R0851	**HF756100**	Carbon Resistor	1.0K 1/4 J				01
	-0855	**HF756100**	Carbon Resistor	1.0K 1/4 J				01
	R0901	**VC722800**	Metal Oxide Film Resistor	0.22 1W J				01
	R0902	**HF756120**	Carbon Resistor	1.2K 1/4 J				01
	R0903	**HF756390**	Carbon Resistor	3.9K 1/4 J				01
	R0904	**VC731200**	Metal Oxide Film Resistor	100.0 1W J				01
	R0905	**HF755330**	Carbon Resistor	330.0 1/4 J				01
	R0911	**HF756100**	Carbon Resistor	1.0K 1/4 J				01
	R0931	**HF757220**	Carbon Resistor	22.0K 1/4 J				01
	R0932	**HF757390**	Carbon Resistor	39.0K 1/4 J				01
*	R0992	**V3733100**	Metal Oxide Film Resistor	39.0 1W J				01
	R0993	**HF755100**	Carbon Resistor	100.0 1/4 J				01
	R0994	**HF756220**	Carbon Resistor	2.2K 1/4 J				01
	R0995	**HF757100**	Carbon Resistor	10.0K 1/4 J				01
	R0996	**HF756220**	Carbon Resistor	2.2K 1/4 J				01
	R0997	**HF757100**	Carbon Resistor	10.0K 1/4 J				01
*	R0998	**V3733100**	Metal Oxide Film Resistor	39.0 1W J				
	R0999	**VP939900**	Metal Oxide Film Resistor	15.0 1W J				01
	RA111	**VF773900**	Resistor Array	RGLE4X473J				01
	RA112	**VH307000**	Resistor Array	RGLE6X473J				01
	RA151	**VH307000**	Resistor Array	RGLE6X473J				01
	RA152	**VF773900**	Resistor Array	RGLE4X473J				01
	TA610	**VH885000**	Transistor Array	TD62785P SOURCE				04
	TR511	**VK165500**	Digital Transistor	DTC123JS TP				01
	-515	**VK165500**	Digital Transistor	DTC123JS TP				01
	TR901	**V3795100**	Transistor	2SA2006 E,F				02
	TR998	**V3375500**	Transistor	2SC3581 E				01

*: New Parts

RANK: Japan only

	REF NO.	PART NO.	DESCRIPTION		REMARKS	QTY	RANK
	TR999	**V3375500**	Transistor	2SC3581 E			01
	X0100	**V3797500**	Ceramic Resonator	7MHz EFOMC7004A4			01
	X0200	**VV345500**	Quartz Crystal Unit	DOC-49S5			05
	X0800	**V3681400**	Ceramic Resonator	16MHz EFOEX1605X4			01
	ZD911	**VG439500**	Zener Diode	MTZ J 10.0B 10.0V			01
	ZD911	**VQ296000**	Zener Diode	MTZJ10B 10.0V			01
		VV583900	Circuit Board	MK-H	(XR565C0)		09
		VK025600	Wire Trap	52147 12P TE			01
		VK024900	Wire Trap	52147 5P TE			01
		VV437800	Diode	1N4148(DO-34)			01
		VV583800	Circuit Board	MK-L	(XR564C0)		09
		VK025600	Wire Trap	52147 12P TE			01
		VK025100	Wire Trap	52147 7P TE			01
		VV437800	Diode	1N4148(DO-34)			01
*		**V7112200**	Circuit Board	MKS5	(XZ594A0)		
		--	Vibration-proof Tape	10X64X0.5	(VK34680)		
		--	Jumper Wire	0.55	(VA07890)		
	C1	**FG651220**	Ceramic Capacitor-SL	22P 50V J			01
	-3	**FG651220**	Ceramic Capacitor-SL	22P 50V J			01
	C1	**VR027400**	Ceramic Capacitor-SL	22P 63V J			01
	-3	**VR027400**	Ceramic Capacitor-SL	22P 63V J			01
	C4	**UR828100**	Electrolytic Cap.	100.00 10.0V			01
	C5	**VC694800**	Semiconductive Cera. Cap.	0.1000 25V Z			01
	C5	**VM902400**	Semiconductive Cera. Cap.	0.1000 25V Z			01
	CA1	**VP755200**	Ceramic Capacitor Array	100P 50V K			02
	CA2	**VP755200**	Ceramic Capacitor Array	100P 50V K			02
*	CL1	**V6781400**	Ceramic Resonator	5.00M EF0EC5004T4Q			
	CN1	**VF728300**	Wire Trap	52147 6P TE			01
	CN2	**VK025600**	Wire Trap	52147 12P TE			01
	CN3	**VK025100**	Wire Trap	52147 7P TE			01
	CN4	**VK024900**	Wire Trap	52147 5P TE			01
*	IC1	**XZ560100**	IC	UPD789022GB-A15-8E	CPU		
	R1	**HF456470**	Carbon Resistor	4.7K 1/4 J			01
	-3	**HF457470**	Carbon Resistor	47.0K 1/4 J			01
	R1	**VL631400**	Carbon Resistor	4.7K 1/6 J			01
	-3	**VL632600**	Carbon Resistor	47.0K 1/6 J			01
	RA1	**VH373200**	Resistor Array	RGLE12X473J			01
*		**V7019600**	Circuit Board	PN	(XV934B0)		
		--	Jumper Wire	0.55	(VA07890)		
	C0100	**VC694800**	Semiconductive Cera. Cap.	0.1000 25V Z			01
	C0200	**VC694800**	Semiconductive Cera. Cap.	0.1000 25V Z			01
	CA201	**VK994900**	Ceramic Capacitor Array	100P 50V M			01
	CA202	**VK994900**	Ceramic Capacitor Array	100P 50V M			01
	CN101	**VI879000**	Cable Holder	51048 12P TE			01
	CN102	**LB918020**	Base Post Connector	XH 2P TE			01
	CN301	**VI878600**	Cable Holder	51048 8P TE			01
	CN401	**VI878900**	Cable Holder	51048 11P TE			01
	CN501	**VI878800**	Cable Holder	51048 10P TE			01
	CN502	**VK024700**	Wire Trap	52147 3P TE			01
	CN503	**VK024700**	Wire Trap	52147 3P TE			01
	CN602	**VI878100**	Cable Holder	51048 3P TE			01
	CN603	**VI878100**	Cable Holder	51048 3P TE			01
	CN701	**VI878400**	Cable Holder	51048 6P TE			01
	CN801	**VI878300**	Cable Holder	51048 5P TE			01
	D0301	**VB941200**	Diode	1SS133,1SS176			01
	-0304	**VB941200**	Diode	1SS133,1SS176			01
	IC100	**XV226A00**	IC	S6A0069X10-Q0RJ	LCD DRIVER		05
	IC200	**XV933A00**	IC	S6A0065B01-Q0RJ	LCD DRIVER		04
	LE102	**VG778600**	LED Green	SLZ290B-03-T2	DISK IN USE		01
	LE103	**VI100100**	LED Red	SLZ-190B-11-T1	VOICE L		01
	LE104	**VI100100**	LED Red	SLZ-190B-11-T1	VOICE R1		01
	LE105	**VI100100**	LED Red	SLZ-190B-11-T1	VOICE R2		01
	LE201	**VC341300**	LED Red	SLZ-190B-01	ONE TOUCH SETTING		01
	LE202	**V3621200**	LED Green	SLZ-290B-10-T2	SONG START/STOP		01
	LE203	**VT387900**	LED Red	SLZ-190B-10-T2	SYNC START		01
	LE204	**VT387900**	LED Red	SLZ-190B-10-T2	SYNC STOP		01

*: New Parts

RANK: Japan only

	REF NO.	PART NO.	DESCRIPTION			REMARKS	QTY	RANK
	LE205	**VC341300**	LED Red	SLZ-190B-01		ACCOMPANIMENT		01
	LE301	**V3621200**	LED Green	SLZ-290B-10-T2		REGISTRATION MEMORY		01
	LE302	**VT387900**	LED Red	SLZ-190B-10-T2		ENDING/rit.		01
	LE303	**VT387900**	LED Red	SLZ-190B-10-T2		MAIN/AUTO FILL B		01
	LE304	**VT387900**	LED Red	SLZ-190B-10-T2		MAIN/AUTO FILL A		01
	LE305	**VT387900**	LED Red	SLZ-190B-10-T2		INTRO		01
	LE401	**VT387900**	LED Red	SLZ-190B-10-T2		FREEZE		01
	LE402	**VI100100**	LED Red	SLZ-190B-11-T1		ACMP ON/OFF		01
	LE403	**VI100100**	LED Red	SLZ-190B-11-T1		RECORD		01
	LE404	**VR699900**	LED Red	SLZ-190B-06-T2		VOICE CHANGE		01
	LE405	**VR699900**	LED Red	SLZ-190B-06-T2		MIXER		01
	R0101	**HF757910**	Carbon Resistor	91.0K 1/4 J				01
	R0102	--	Jumper Wire	0.55		(VA07890)		
	R0901	**HF754100**	Carbon Resistor	10.0 1/4 J				01
	R0902	**HF754100**	Carbon Resistor	10.0 1/4 J				01
	RA101	**V5302400**	Resistor Array	RGLE5V222J				01
	RE602	**VU481300**	Encoder	REB161 PVB 15F		DATA Dial		03
⚠	SW700	**VY980400**	Push Switch	SDDLB1 J,UC,CEE		STANDBY/ON		03
	VR603	**VT432100**	Rotary Variable Resistor	B10K EVJ05DF25B14		PITCH BEND		03
	VR800	**VZ048400**	Rotary Variable Resistor	A10.0K XV0141GPVN2		MASTER VOLUME		02
	W-ENC	--	Connector Assembly	ENC 3P		(V381800)		
	W-LCD	--	Connector Assembly	LCD 12P		(V445890)		
	W-MVR	--	Connector Assembly	MVR 5P		(V381830)		
	W-PIT	--	Connector Assembly	PIT 3P		(V381810)		
	W-PND	--	Connector Assembly	PND 8P		(V381880)		
	W-PNL	--	Connector Assembly	PNL 10P		(V381890)		
	W-PNS	--	Connector Assembly	PNS 11P		(V381900)		
	W-STB	--	Connector Assembly	STB 6P		(V381850)		
		XV948A00	Speaker	3.0cm		TWEETER	2	02
		XT278A00	Speaker	12.0cm 4 ohm 6W		WOOFER	2	06
*		**V7126700**	LCD	TTR				
*		**V7042500**	Back-lit Assembly	PT				
		V6492300	Floppy Disk Drive	3.5inch DF354H				13

✻: New Parts

RANK: Japan only