PORTATONE

PSR-340

SERVICE MANUAL



■ **CONTENTS**

SPECIFICATIONS 3
PANEL LAYOUT 4
CIRCUIT BOARD LAYOUT 5
BLOCK DIAGRAM 6
DISASSEMBLY PROCEDURE 7
LSI PIN DESCRIPTION 8
IC BLOCK DIAGRAM 10
CIRCUIT BOARDS 11
TEST PROGRAM & INITIALIZE 15
MIDI IMPLEMENTATION CHART 18
PARTS LIST
OVERALL CIRCUIT DIAGRAM

PK 001622

YAMAHA

HAMAMATSU,JAPAN
1.59K-605 Ⓘ Printed in Japan'99.05

IMPORTANT NOTICE

This manual has been provided for the use of authorized Yamaha Retailers and their service personnel. It has been assumed that basic service procedures inherent to the industry, and more specifically Yamaha Products, are already known and understood by the users, and have therefore not been restated.

WARNING: Failure to follow appropriate service and safety procedures when servicing this product may result in personal injury, destruction of expensive components and failure of the product to per form as specified. For these reasons, we advise all Yamaha product owners that all service required should be performed by an authorized Yamaha Retailer or the appointed service repre sentative.

IMPORTANT: This presentation or sale of this manual to any individual or firm does not constitute authorization, certification, recognition of any applicable technical capabilities, or establish a principal-agent relationship of any form.

The data provided is believed to be accurate and applicable to the unit(s) indicated on the cover. The research engineering, and service departments of Yamaha are continually striving to improve Yamaha products. Modifications are, therefor, inevitable and changes in specification sre subject to change without notice or obligation to retrofit. Should any discrepancy appear to exist, please contact the distributor's Service Division.

WARNING: Static discharges can destroy expensive components. Discharge any static electricity your body may have accumulated by grounding yourself to the ground buss in the unit (heavy gauge black wires connect to this buss).

IMPORTANT: Turn the unit OFF during disassembly and parts replacement. Recheck all work before you apply power to the unit.

WARNING: CHEMICAL CONTENT NOTICE!

The solder used in the production of this product contains LEAD. In addition, other electrical / electronic and / or plastic (where applicable) components may also contain traces of chemicals found by the California Health and Welfare Agency (and possibly other entities) to cause cancer and / or birth defects or other reproductive harm.

DO NOT PLACE SOLDER, ELECTRICAL / ELECTRONIC OR PLASTIC COMPONENTS IN YOUR MOUTH FOR ANY REASON WHAT SO EVER!

Avoid prolonged, unprotected contact between solder and your skin! When soldering, do not inhale solder fumes or expose eyes to solder / flux vapor!

If you come in contact with solder or components located inside the enclosure of this product, wash your hands before handling food.

WARNING

Components having special characteristics are marked ⚠ and must be replaced with parts having specification equal to those originally installed.

SPECIFICATIONS

Keyboards
- 61 standard-size keys (C1 - C6), with Touch Response and Dynamic Filter.

Display
- Large multi-function LCD display (backlit)

Setup
- STANDBY/ON
- MASTER VOLUME : MIN - MAX

Panel Controls
- OVERALL (▲,▼,+,-), FUNCTION, SONG, VOICE, STYLE, PORTABLE GRAND, METRONOME, [0]-[9], [+](YES/FWD), [-](NO/BWD), DEMO, TOUCH

Demo Song
- 3 songs

Voice
- 100 panel voices + 10 Drum Kits + 128 GM Voices
- Polyphony : 32
- Voice Set
- Dual Voice Mode
- Split Voice Mode

Auto Accompaniment
- 100 styles + 1disk style
  - Accompaniment Control : ACMP ON/OFF, SYNC-START, START/STOP, INTRO/ENDING, MAIN A/B(AUTO FILL)
  - Beat Indicator
  - Fingering : Multi fingering
  - Accompaniment Volume

Yamaha Educational Suite
- Chord Guide : Dictionary, Smart Chord, EZ Chord

One Touch Setting
- Preset A and B (for each style)
- User (4 Setups x 4 Banks)

Overall controls
- Tempo
- Transpose
- Tuning
- Accompaniment Volume
- Song Volume
- Metronome Volume

Effects
- Reverb : 8 types
- Chorus : 4 types
- DSP : 33 types
- Harmony : 26 types

Song
- 3 Preset Songs (Demo) + 3 User Songs Song Clear

Recording
- Song
  - User Song : 3 Songs
  - Real Time Recording/Step Recording
  - Recording Tracks : 1, 2, 3, 4, 5, 6/CHORD
- EZ Chord
  - 8 Banks + Bank Chain
- OTS (One Touch Setting)
  - User : 4 Set ups x 4 Banks

DISK Song Playback
- Save
- Load
- Delete
- Format

MIDI
- Transmit Settings
- Receive Settings
- Local Control
- Clock
- Initial Send

Auxiliary jacks
- PHONES/OUTPUT, DC IN 10-12V, MIDI IN/OUT, FOOT SWITCH

Amplifier
- 6.0W + 6.0W

Speakers
- 12cm x 2 + 3cm x 2

Power Consumption
- 22 W (when using PA-5B, PA-5C or PA-5I power adaptor)

Power Supply
- Adaptor :Yamaha PA-5B, PA-5C or PA-5I AC power adaptor
- Batteries:Six “D” size, SUM-1, R-20 or equivalent batteries

Dimensions (W x D x H)
- 952 x 387 x 170 mm (37-1/2" x 15-1/4" x 6-2/3")

Weight
- 7.8 kg (17.2lbs.)

Supplied Accessories
- Music Stand
- Owner’s Manual
- Sample Disk

Optional Accessories
- Head phones : HPE-150
- AC power adaptor : PA-5B, PA-5C or PA-5I
- Foot switch : FC4, FC5
- Keyboard stand : L6

* Specifications and descriptions are for information purposes only. Yamaha Corp. reserves the right to change or modify products or specifications at any time without prior notice.

■ PANEL LAYOUT

• Control Panel

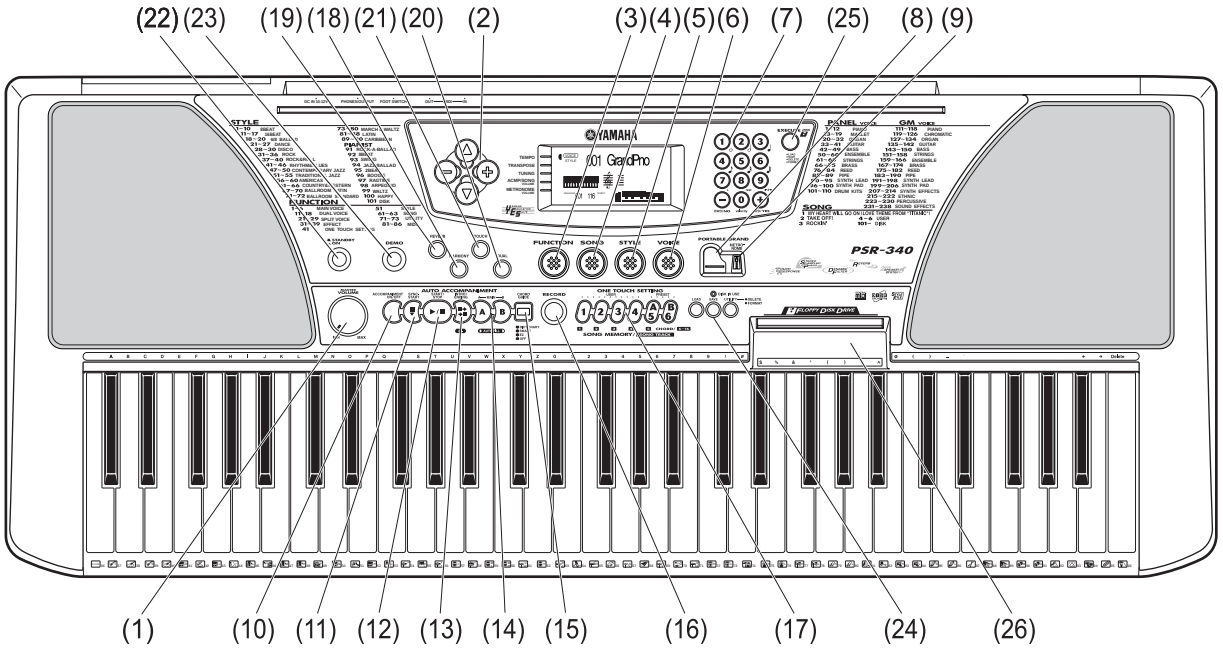

(1) MASTER VOLUME dial
(2) OVERALL buttons (▲,▼,+,-)
(3) FUNCTION button
(4) SONG button
(5) STYLE button
(6) VOICE button
(7) Numeric keypad, +/- buttons
(8) PORTABLE GRAND button
(9) METRONOME button
(10) ACMP ON/OFF button
(11) SYNC-START button
(12) START/STOP button
(13) INTRO/ENDING button
(14) MAIN A/B (AUTO FILL) buttons
(15) CHORD GUIDE button
(16) RECORD button
(17) ONE TOUCH SETTING / SONG MEMORY buttons
(18) HARMONY button
(19) REVERB button
(20) DUAL button
(21) TOUCH button
(22) Power switch (STANDBY/ON)
(23) DEMO button
(24) LOAD, SAVE, UTILITY button
(25) EXECUTE button
(26) DISK DRIVE

• Rear Panel

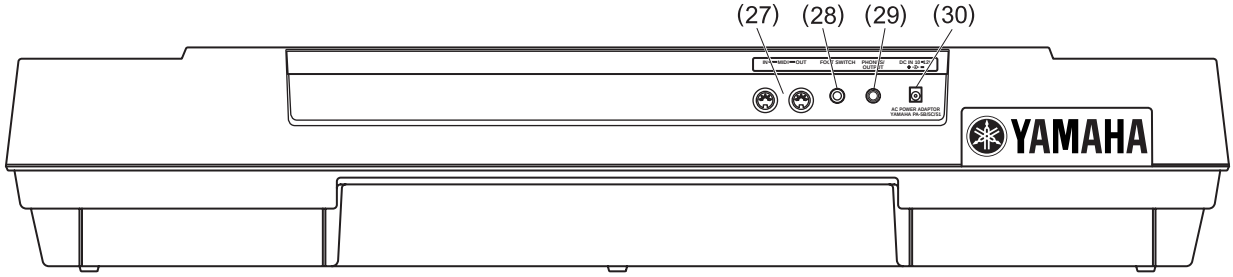

(27) MIDI IN, OUT terminals
(28) FOOT SWITCH jack
(29) PHONES/OUTPUT jack
(30) DC IN 10/12V jack

■ CIRCUIT BOARD LAYOUT & WIRING

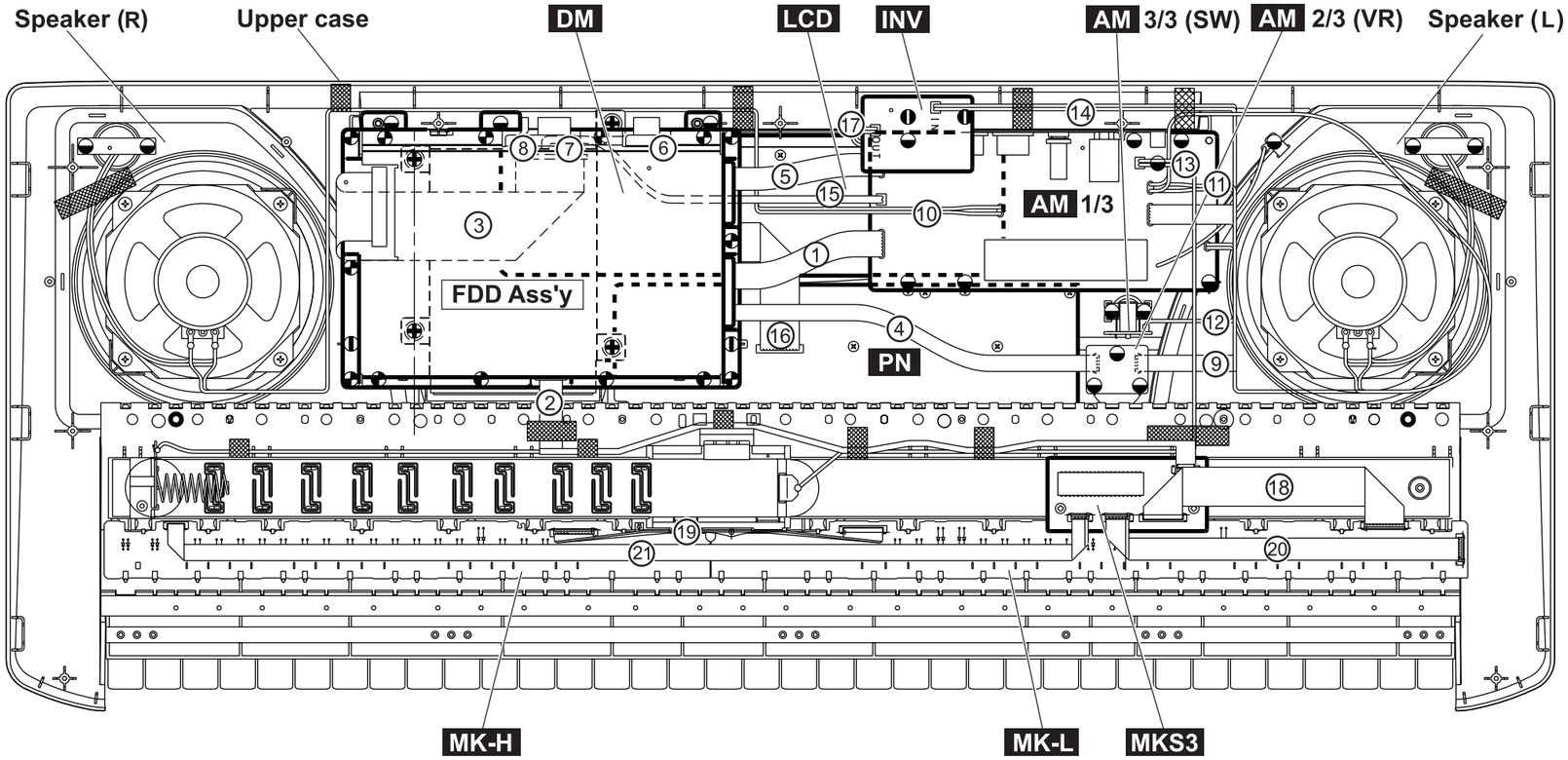

REF.NO	DESTINATION		CONNECTOR ASSEMBLY	REMARKS	PARTS LIST Ref NO.	REF.NO	DESTINATION		CONNECTOR ASSEMBLY	REMARKS	PARTS LIST Ref NO.
①	DM-CN101	AM-CN901	DM-POWER	7P/150	AM-W0901	⑫	AM-CN902	AM-CN904	AM-PSW	4P/140	AM-W0902
②	DM-CN102	MKS3-CN1	DM-MKS3	6P/510	510	⑬	AM-CN903	BATTERY	BATT	2P/510,910	470
③	DM-CN301	FDD Ass'y	FDD	34P/260	490	⑭	AM-CN905	INV-CN906	AM-INV	2P/310	AM-W0905
④	DM-CN501	AM-CN805	DM-MVR	5P/270	AM-W0805	⑮	AM-CN906	FDD Ass'y	FDD	2P/310	480
⑤	DM-CN601	AM-CN602	DM-MIDI	6P/160	AM-W0602	⑯	LCD-CN705	PN-CN708	PN1-PN2	12P/270	LCD-W0705
⑥	DM-CN701	LCD-CN703	DM-PN1	8P/250	LCD-W0703	⑰	INV-CN905	EL LIGHT	EL-INV	2P/180	500
⑦	DM-CN702	LCD-CN704	DM-PN1	10P/210	LCD-W0704	⑱	MKS3-CN2	MK-L	MK-A	12P/195	160d
⑧	DM-CN707	PN-CN710	DM-PN2	2P/280	LCD-W0710	⑲	MK-H	MK-L	MK-B	12P/220	160e
⑨	AM-CN801	AM-CN804	AM-MVR	5P/160	AM-W0801	⑳	MKS3-CN3	MK-L	MK-C	7P/255	160f
⑩	AM-CN802	SPEAKER-R	SP-R	2P/800	AM-W0802	㉑	MKS3-CN4	MK-H	MK-D	5P/620	160g
⑪	AM-CN803	SPEAKER-L	SP-L	2P/400	AM-W0803						

■ BLOCK DIAGRAM

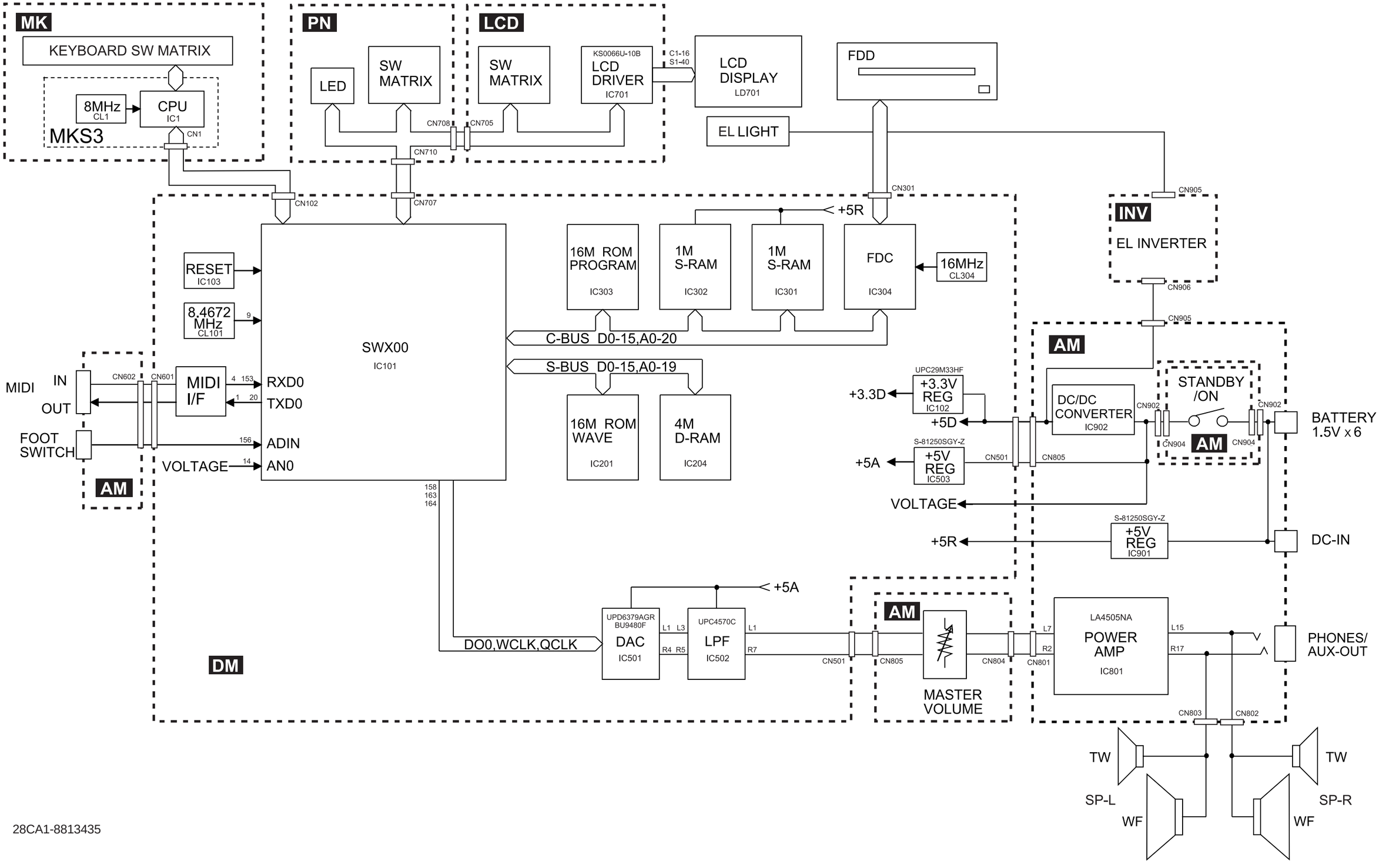

28CA1-8813435

■ DISASSEMBLY PROCEDURE

1 Lower Case Assembly

1-1 Remove the battery cover assembly. (Fig. 1)

1-2 Remove the fourteen (14) screws marked [370] and the four (4) screws marked [380]. The lower case assembly can then be removed. (Fig. 1)

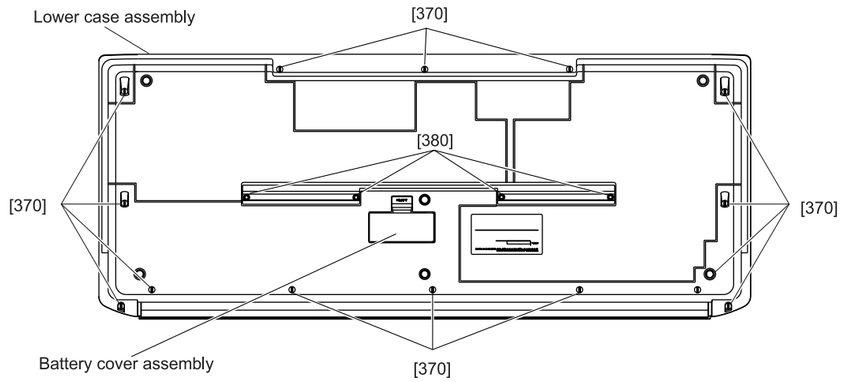

(Fig.1)

2 Circuit Board and Unit

After removing the lower case assembly, remove the following screws. Each circuit board can then be removed. (Fig. 2 & Fig. 4)

Circuit Boad & Unit	Ref.No.	Screw	Qty.
DM	[370]	Bind Head Tapping Screw-P 3.0X12 MFZN2Y (EP600300)	2
	[360A]	Bind Head Tapping Screw-P 3.0X8 MFZN2Y (EP600280)	3
	[400]	Bind Head Tapping Screw-B 3.0X8 MFZN2Y (EP600250)	14
FDD Ass'y *1	[410]	Tapping Screw-PWHP 3.0X10 MFZN2Y (VD964600)	4
PN *1	[360C]	Bind Head Tapping Screw-P 3.0X8 MFZN2Y (EP600280)	10
INV	[550]	Tight Screw-B 3.0X14 MFZN2Y (VK228100)	2
AM 1/3 *2	[360E]	Bind Head Tapping Screw-P 3.0X8 MFZN2Y (EP600280)	2
LCD *3	[360D]	Bind Head Tapping Screw-P 3.0X8 MFZN2Y (EP600280)	10
AM 2/3 *4	[360B]	Bind Head Tapping Screw-P 3.0X8 MFZN2Y (EP600280)	3
AM 3/3	[360F]	Bind Head Tapping Screw-P 3.0X8 MFZN2Y (EP600280)	2
Speaker (TW)	[360G]	Bind Head Tapping Screw-P 3.0X8 MFZN2Y (EP600280)	4
Speaker (WO)	[390]	Bind Head Tapping Screw-P 4.0X8 MFZN2BL (VB931600)	8
Keyboard	[380]	Bind Head Tapping Screw-P 3.0X25 MFZN2Y (VK228100)	2

Note: *1 Before removing the FDD Ass'y, and PN circuit board, remove the DM circuit board.
***2 Before removing the AM 1/3 circuit board, remove the INV circuit board.**
***3 Before removing the LCD circuit board, remove the DM circuit board, INV circuit board and AM 1/3 circuit board.**
***4 Before removing the AM 2/3 circuit board, remove the volume knob. (Fig. 3)**
When removing the EL light, be careful not to bend it.
Do not touch the electric passage part of the rubber connector while removing it.

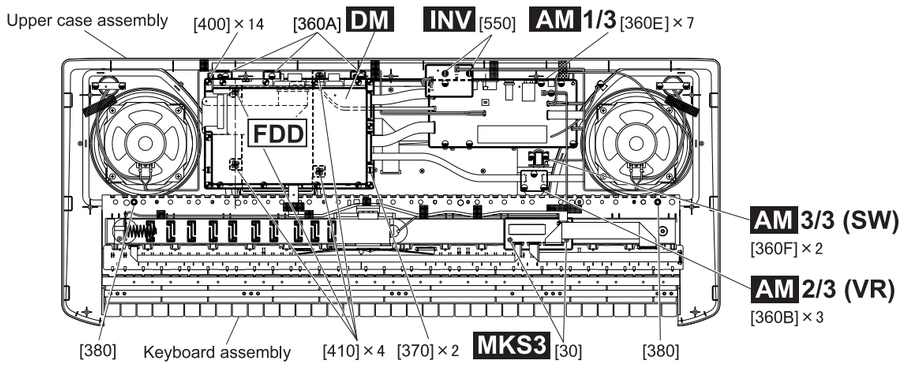

(Fig.2)



(Fig.3)

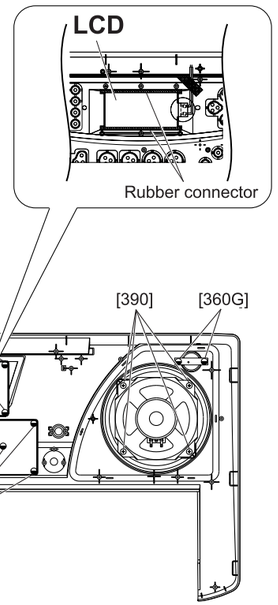

(Fig.4)

3 Disassembling the Keyboard Assembly

3-1 Remove the keyboard assembly. (See procedure 2.)

3-2 Remove the two (2) screws marked [30]. The MKS3 circuit board can then be removed. (Fig. 2)

3-3 Remove the MK circuit board while pressing the fifteen (15) hooks (A) inward, and then remove the rubber contact. (Fig. 5)

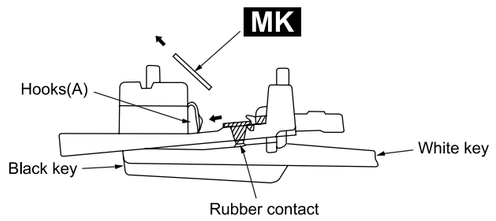

(Fig. 5)

3-4 Remove the twenty-one (21) screws marked [140], then remove the black keys from the lower register. Afterwards, remove the white keys DFA and C' and then remove the white keys CEGB from the higher regiser. At this time, lift the keys from the front and slide them towards you. The keys can now be removed from the assembly. (Fig. 6)

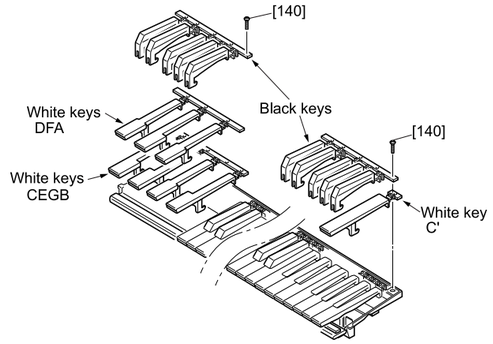

[140]:Bind Head Tapping Screw-P 3.0X16 MFZN2BL (VB205200)
[140]:Bind Head Tapping Screw-P 3.0X16 MFZN2B (VS756700)
[140]:Bind Head Tapping Screw-P 3.0X16 MFZN2B (EP600310)

(Fig. 6)

4 Assembling the Keyboard Assembly

4-1 Install the white keys CEGB from the lower register, and then install the DFA keys and C' key. Afterwards, install the back keys from the higher register, and tighten the twenty-one (21) screws marked [140]. (Fig. 6)

4-2 Install the rubber contacts in the assembly while pressing the keys as shown in Figure 7. Check that the rubber contact has been firmly placed into position in the area indicated by the arrow in Figure 8. (Fig. 7 and 8)

* When fitting the rubber contacts, raise both ends of the frame so that keys do not push the rubber contact up.

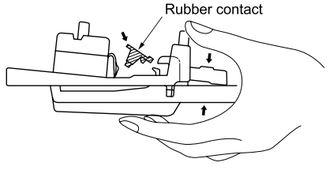

(Fig. 7)

4-3 Install the MK circuit board in the assembly so that the hooks (B) hold it as shown in Figure 9.

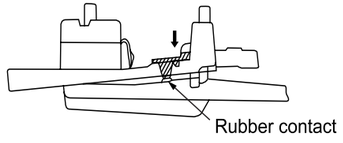

(Fig. 8)

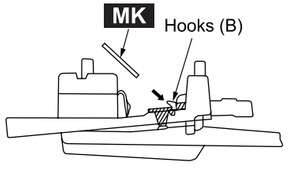

(Fig. 9)

■ LSI PIN DESCRIPTION

- **KS0066U-10B** (XV226A00) **LCD DRIVER**
- **SED1278F0A** (XV974A00) **LCD DRIVER**

PIN NO.	NAME	I/O	FUNCTION	PIN NO.	NAME	I/O	FUNCTION
1	S22	O		41	DB2	I/O	
2	S21	O		42	DB3	I/O	
3	S20	O		43	DB4	I/O	Data interface
4	S19	O		44	DB5	I/O	
5	S18	O		45	DB6	I/O	
6	S17	O		46	DB7	I/O	
7	S16	O		47	C1	O	
8	S15	O		48	C2	O	
9	S14	O		49	C3	O	
10	S13	O		50	C4	O	
11	S12	O	Segment signal output for LCD driving	51	C5	O	
12	S11	O		52	C6	O	
13	S10	O		53	C7	O	
14	S9	O		54	C8	O	Common signal output for LCD driving
15	S8	O		55	C9	O	
16	S7	O		56	C10	O	
17	S6	O		57	C11	O	
18	S5	O		58	C12	O	
19	S4	O		59	C13	O	
20	S3	O		60	C14	O	
21	S2	O		61	C15	O	
22	S1	O		62	C16	O	
23	Vss		Ground	63	S40	O	
24	OSC1	I	Oscillator	64	S39	O	
25	OSC2	O	Oscillator	65	S38	O	
26	V1			66	S37	O	
27	V2			67	S36	O	
28	V3		Power supply	68	S35	O	
29	V4			69	S34	O	
30	V5			70	S33	O	
31	CLK1	O	Data latch clock	71	S32	O	Segment signal output for LCD driving
32	CLK2	O	Data shift clock	72	S31	O	
33	Vdd		Power supply (+5 V)	73	S30	O	
34	M	O	Altanated signal for LCD driver output	74	S29	O	
35	D	O	Display data interface	75	S28	O	
36	RS	I		76	S27	O	
37	R/W	I	Read/write	77	S26	O	
38	E	I	Enable	78	S25	O	
39	DB0	I/O	Data interface	79	S24	O	
40	DB1	I/O	Data interface	80	S23	O	

- **HD63B05V0F07P** (XR951A00) **CPU**

PIN NO.	NAME	I/O	FUNCTION	PIN NO.	NAME	I/O	FUNCTION
1	/RES	I	Reset	21	C7	I/O	
2	/INT	I	Interrupt request	22	C6	I/O	
3	NUM	I	Non-maskable interrupt	23	C5	I/O	
4	A7	I/O		24	C4	I/O	Port C
5	A6	I/O		25	C3	I/O	
6	A5	I/O		26	C2	I/O	
7	A4	I/O	Port A	27	C1	I/O	
8	A3	I/O		28	C0	I/O	
9	A2	I/O		29	D0	I/O	
10	A1	I/O		30	D1	I/O	Port D
11	A0	I/O		31	D2	I/O	
12	B0	I/O		32	D3/TX	O	(Serial data output)
13	B1	I/O		33	D4/RX	I	(Serial data input)
14	B2	I/O		34	D5//CK	O	(Clock for serial operation)
15	B3	I/O	Port B	35	D6//INT2	I	(Interrupt request 2)
16	B4	I/O		36	/STBY	I	(Standby mode signal)
17	B5	I/O		37	TIMER	I	Timer
18	B6	I/O		38	XTAL	O	Clock
19	B7	I/O		39	EXTAL	I	
20	VSS		Ground	40	VCC		Power supply

• **HG73C205AFD** (XU947C00) SWX00B **TONE GENERATOR**

PIN NO.	NAME	I/O	FUNCTION	PIN NO.	NAME	I/O	FUNCTION
1	ICN	I	Initial clear	85	CMA3	O	Program address bus
2	RFCLKI	I	PLL Clock	86	CMA8	O	
3	TM2	I	PLL Control	87	CMA2	O	
4	AVDD_PLL		Power supply	88	CRD	O	read signal
5	AVSS_PLL		Ground	89	CMA1	O	Program address bus
6	MODE0	I	SWX dual mode	90	CUB	O	high byte effective signal
7	VCC7		Power supply	91	VCC91		Power supply
8	GND8		Ground	92	GHND92		Ground
9	XIN	I	crystal oscillator	93	CS1	O	CS signal
10	XOUT	O	crystal oscillator	94	CMA0	O	Program address bus
11	MODE1	I	SWX separate mode	95	CLB	O	low byte effective signal
12	TEST0	I	TEST pin	96	CMA12	O	
13	TESTON	I		97	CMA11	O	
14	AN0-P40	I		98	CMA10	O	Program address bus
15	AN1-P41	I		99	CMA9	O	
16	AN2-P42	I	A/D converter	100	GND100		Ground
17	AN3-P43	I		101	CWE	O	write signal
18	AVDD_AN		Power supply	102	CMA16	O	
19	AVSS_AN		Ground	103	CMA15	O	
20	TXD0	O	for MIDI or TO-HOST	104	CMA14	O	Program address bus
21	TXD1	O	for MIDI	105	CMA13	O	
22	EXCLK	I	Crystal oscillator	106	CMD8	I/O	
23	SMD11	I/O		107	CMD7	I/O	
24	SMD4	I/O		108	CMD9	I/O	
25	SMD3	I/O		109	CMD6	I/O	
26	SMD12	I/O		110	CMD10	I/O	
27	SMD10	I/O		111	CMD5	I/O	Program memory Data bus
28	SMD5	I/O		112	CMD11	I/O	
29	SMD2	I/O	Wave memory data bus	113	CMD4	I/O	
30	SMD13	I/O		114	CMD12	I/O	
31	SMD9	I/O		115	CMD3	I/O	
32	SMD6	I/O		116	CMD13	I/O	
33	SMD1	I/O		117	CMD2	I/O	
34	SMD14	I/O		118	CMD14	I/O	
35	VCC35		Power supply	119	VCC119		Power supply
36	GND36		Ground	120	GND115		Ground
37	SMD8	I/O		121	CMD1	I/O	
38	SMD7	I/O		122	CMD15	I/O	Program memory Data bus
39	SMD0	I/O	Wave memory data bus	123	CMD0	I/O	
40	SMD15	I/O		124	CMA21	O	Program address bus
41	SOE	O	read signal	125	PDT15	I/O	
42	SWE	O	write signal	126	PDT14	I/O	
43	SRAS	O	RAS signal	127	PDT13	I/O	
44	SCAS	O	CAS signal	128	PDT12	I/O	
45	REFRESH	O	REFRESH signal	129	PDT11	I/O	SWX access data bus
46	CS0	O	CS signal	130	PDT10	I/O	
47	SMA0	O	Memory address bus	131	PDT9	I/O	
48	SMA16	O		132	PDT8	I/O	
49	VCC49		Power supply	133	VCC133		Power supply
50	GND50		Ground	134	GND134		Ground
51	SMA1	O		135	PDT7	I/O	
52	SMA15	O		136	PDT6	I/O	
53	SMA2	O		137	PDT5	I/O	
54	SMA14	O		138	PDT4	I/O	
55	SMA3	O	Memory address bus	139	PDT3	I/O	SWX access data bus
56	SMA13	O		140	PDT2	I/O	
57	SMA4	O		141	PDT1	I/O	
58	SMA12	O		142	PDT0	I/O	
59	SMA5	O		143	VCA143		Power supply
60	GND60		Ground	144	GND144		Ground
61	VCC61		Power supply	145	PAD2	I	
62	SMA11	O		146	PAD1	I	SWX access address bus
63	SMA6	O		147	PAD0	I	
64	SMA10	O		148	VCC148		Power supply
65	SMA7	O		149	GND149		Ground
66	SMA9	O		150	PCS	I	Chip select
67	SMA17	O		151	PWR	I	write enable
68	SMA8	O	Memory address bus	152	PRD	I	read enable
69	SMA18	O		153	RXD0	I	for Midi or TO-HOST
70	SMA19	O		154	RXD1	I	for Midi or Key scan
71	SMA20	O		155	SCLKI	I	EXT Clock
72	SMA21	O		156	ADIN	I	A/D converter
73	SMA22	O		157	ADLR	O	A/D converter LR clock
74	SMA23	O		158	DO0	O	
75	CMA20	O	Program address bus	159	DO1	O	DAC
76	CMA19	O		160	SYSCLK	O	1/2 clock
77	VCC77		Power supply	161	VCC161		Power supply
78	GND78	O	Ground	162	GND162		Ground
79	CMA18	O		163	WCLK	O	for DAC LR clock
80	CMA17	O		164	QCLK	O	1/12 clock
81	CMA5	O		165	BCLK	O	IIS-DAC clock
82	CMA6	O	Program address bus	166	SYI	I	Synch signal
83	CMA4	O		167	IRQ0	I	
84	CMA7	O		168	NMI	I	Interrupt request

■ IC BLOCK DIAGRAM

- **μPC4570C (XV957A00)**
  Dual Operational Amplifier

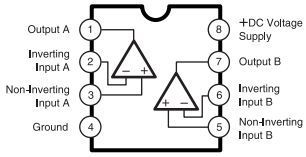

- **μPD6379AGR (XR998A0)**
  Digital to Analog Converter

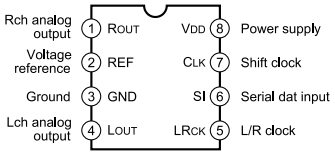

■ CIRCUIT BOARDS

• AM 1/3 Circuit Board

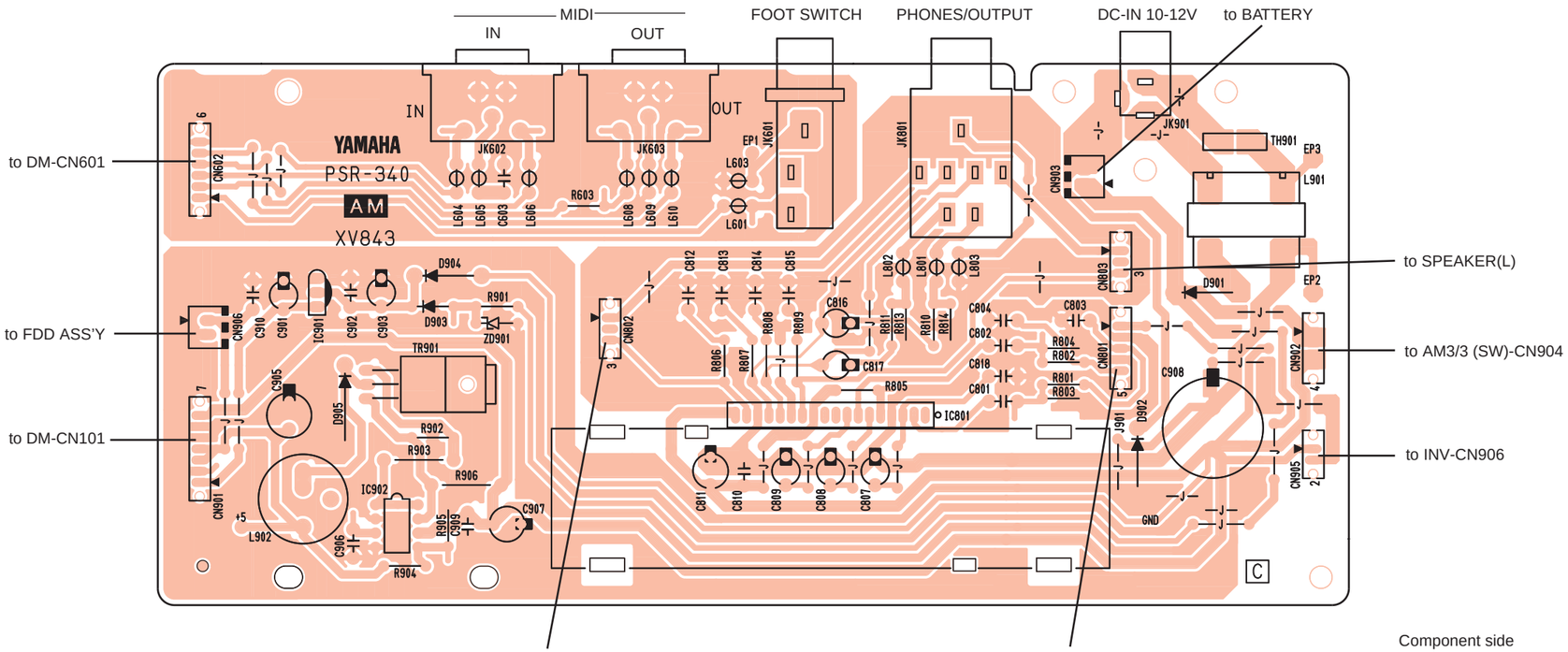

• AM 2/3 (VR) Circuit Board

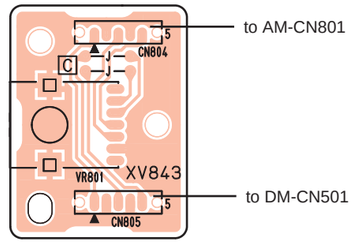

• AM 3/3 (SW) Circuit Board

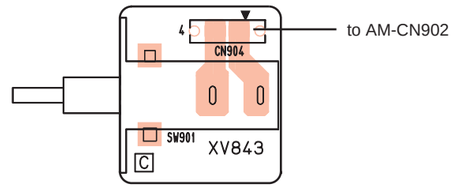

• INV Circuit Board

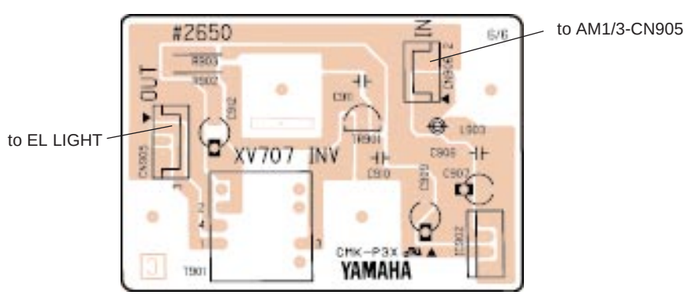

• MKS3 Circuit Board

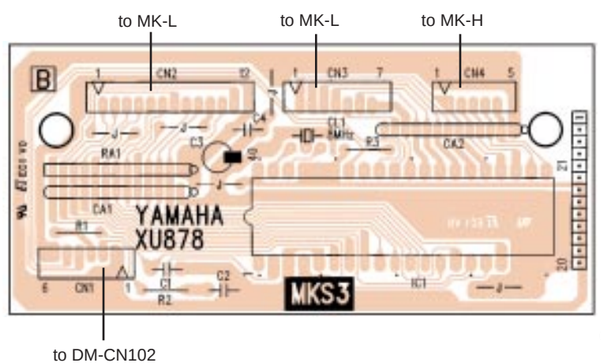

AM 1/3 : 2NA-V354970 △1
AM 2/3(VR) : 2NA-V3454970 △1
AM 3/3(SW) : 2NA-V3454970 △1
INV : 2NA-V348090 △0
MKS3 :2NA-V345820

Note: See parts list for details of circuit board component parts.

- **DM Circuit Board**

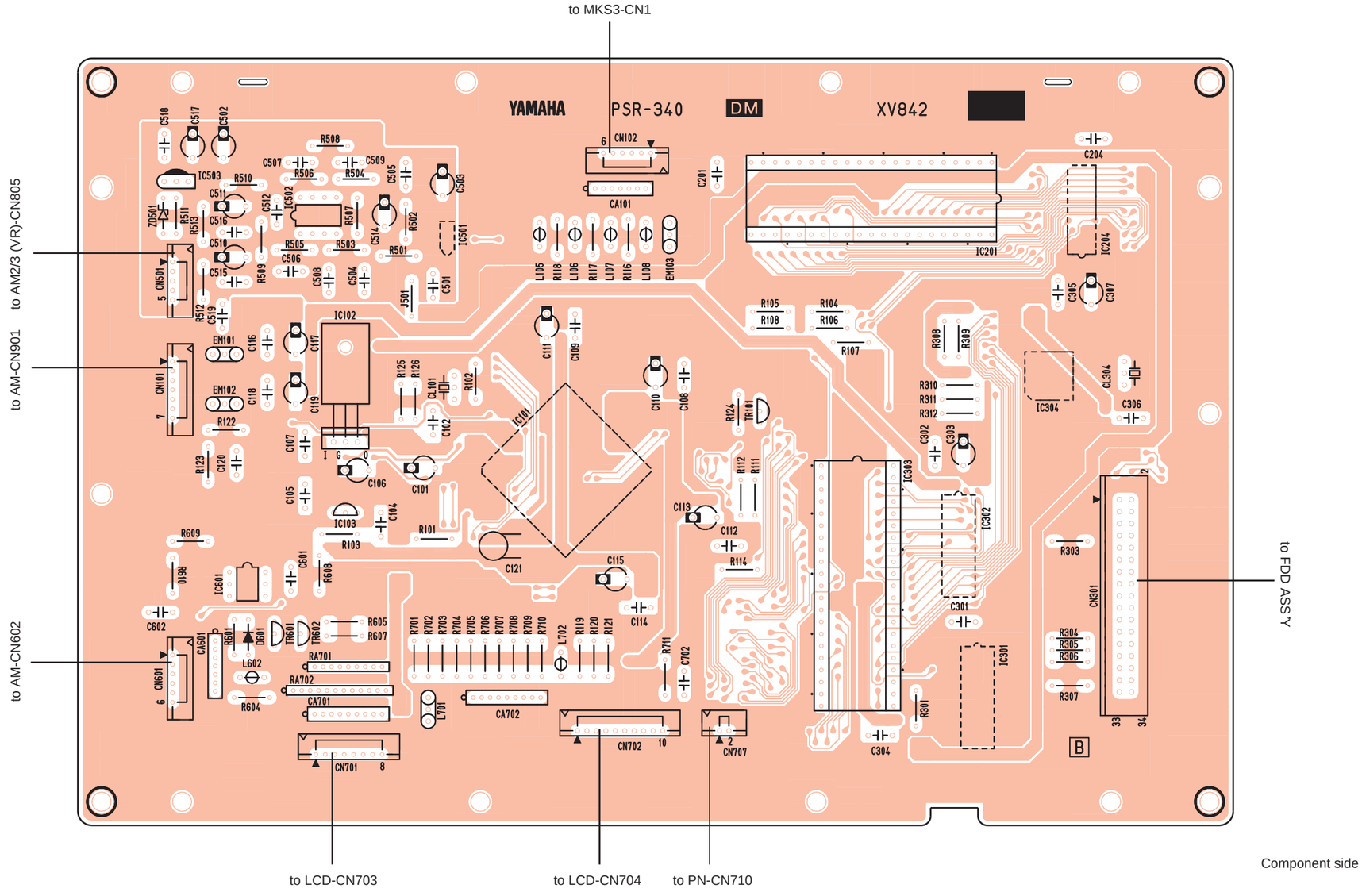

DM:2NA-V354960 0

- **DM Circuit Board**

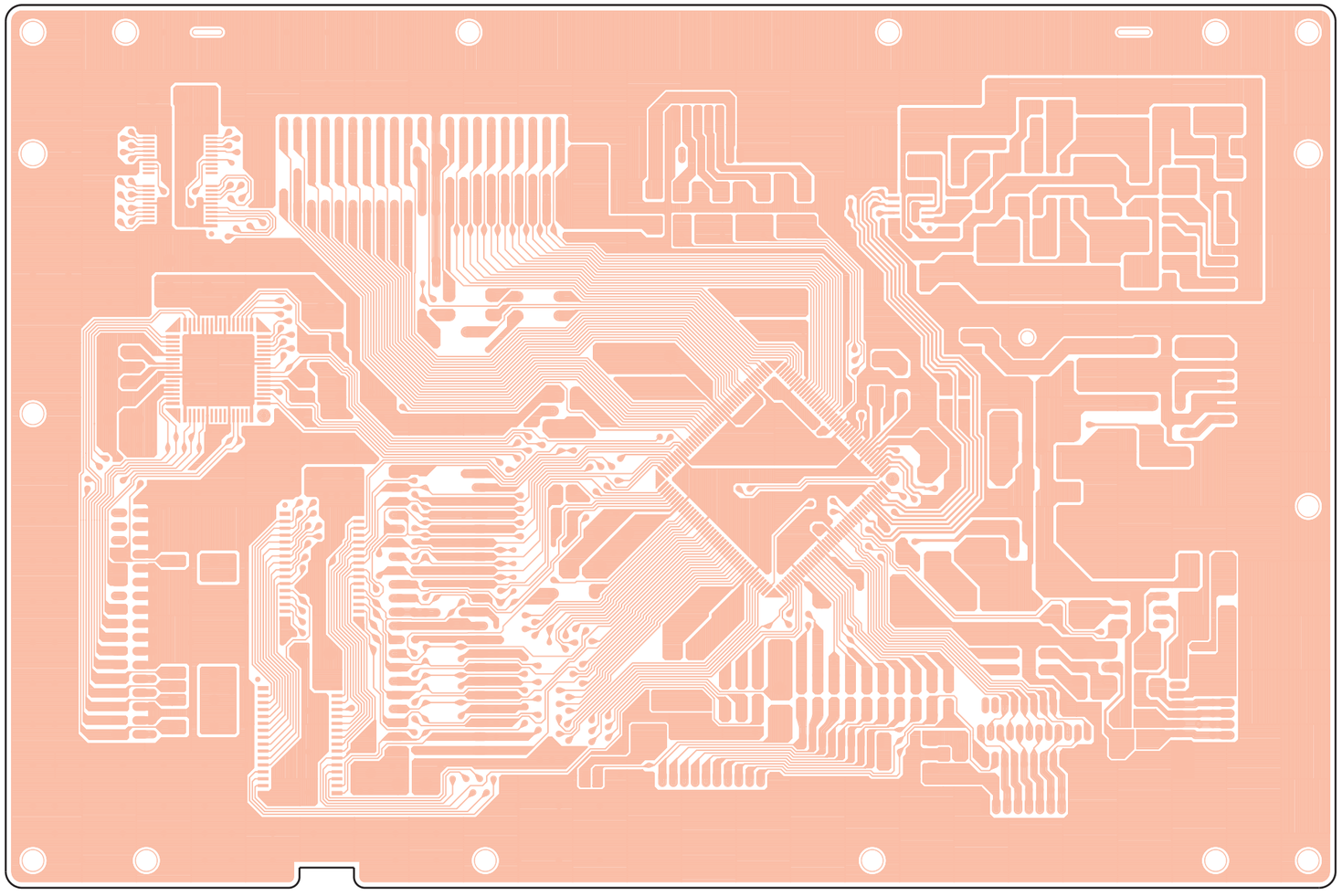

Pattern side

DM:2NA-V354960 △0

Note: See parts list for details of circuit board component parts.

- **LCD Circuit Board**

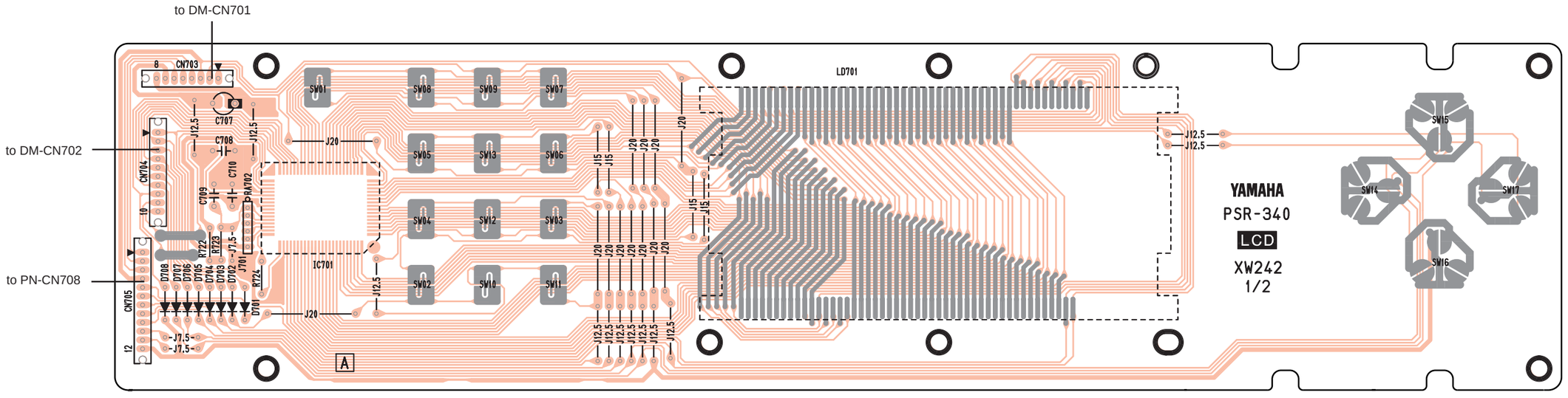

Component side

- **PN Circuit Board**

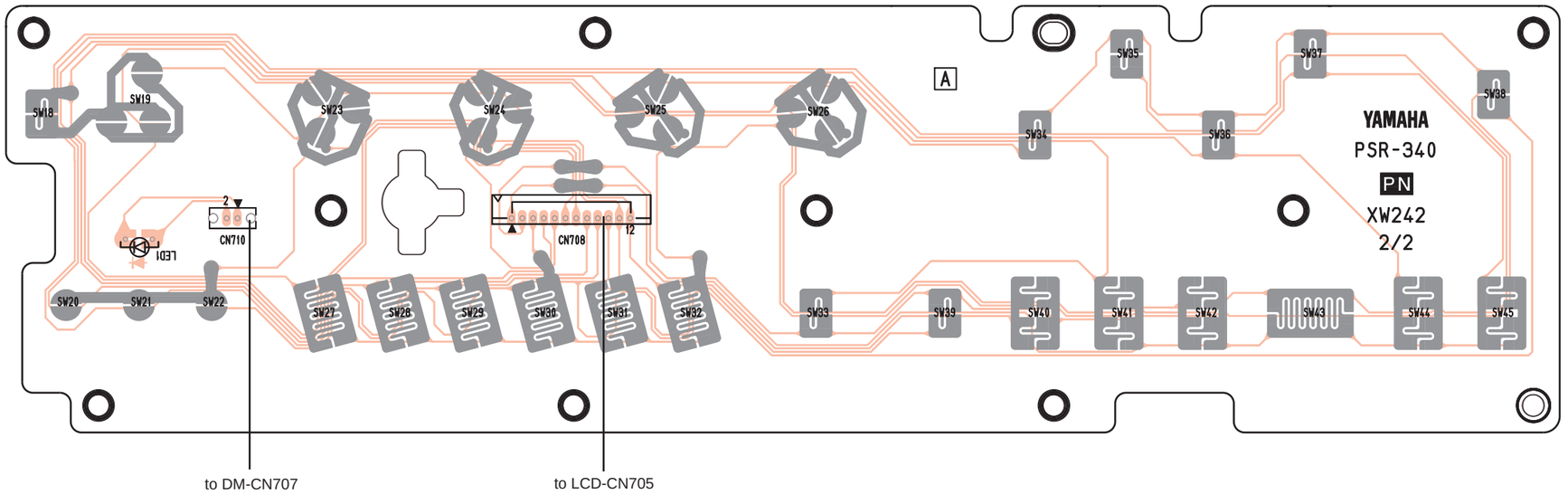

Component side

LCD: 2NA-V354980
PN: 2NA-V354990

Note: See parts list for details of circuit board component parts.

■ TEST PROGRAM & INITIALIZE

1. TEST PROGRAM

A. PREPARATION

1) PA-3B (AC adaptor) is used. (PA-32 or PA-3 is utilizable)
2) The volume is usually moved to the use position when no volume change is required.
3) Measuring instruments:
   Frequency counter
   Level meter (with a JIS-C filter)
   Note: Use a stereo plug and connect the 33 ohm load to the [PHONES/AUX OUT] jack.
4) Jigs:
   Foot switch, MIDI cable, Floppy Disk (2HD & 2DD)

B. HOW TO ENTER THE TEST PROGRAM

AUTO MODE

While pressing the C3#, F3 and G3# keys, turn on the [STAND BY/ON] switch.

MANUAL MODE

While pressing the C2#, F2 and G2# keys, turn on the [STAND BY/ON] switch.

C. PROCEEDING THROUGH THE TEST PROGRAM

AUTO MODE

When the test program is started, the test automatically is executed.

When confirmation is necessary, the test program stops operating and waits fot the instruction. At this time, press the [START/STOP] button; the next test is automatically executed.

MANUAL MODE

The LCD will display “TEST” when entering the test program.

To select the program number, use the [OVERALL +] and [OVERALL -] buttons.

To execute the test, press the [START/STOP] button.

To proceed to the next test, press the [START/STOP] button.

D. TEST PROGRAM LIST

TEST NO.	LCD (initial)	Test Functions and Judgment Criteria
1	001:Version	Displays ROM version. ROM (Program, Wave) versions are displayed alternately on the LCD.
2	002:Rom Chk1	Checks the ROM. The test result appears on the LCD.
3	003:Ram Chk1	Checks all the RAMs that are connected to the CPU. The test result appears on the LCD.
4	004:Wrom Chk1	Checks the WAVE ROMs that are connected to the CPU. The test result appears on the LCD.
5	005:Wram Chk1	Checks all the WAVE RAMs that are connected to the CPU. The test result appears on the LCD.
7	007:FDD Chk	Insert the floppy disks one by one (2DD & 2HD). Checks the floppy disk drive unit.
11	011:TG1 Chk	Outputs the sine wave by changing the channels in sequence from C2 to G4. After auto-scaling is finished, individual keys can be played. (If playing two or more keys simulaneously, the first pressed key has priority to make a sound.)
13	013:Pit Chk	Connect the frequency counter to the [PHONES/AUX OUT] jack. Check that the 440 Hz +/- 1.76 Hz signal is output.

14	014:Output R	Connect the level meter (with a JIS-C filter) to the [PHONES/AUX OUT] jack. (33 ohm load) Set the [MASTER VOLUME] at maximum. Check the output level (1 kHz). Phones L: Less than –45 dBm Phones R: -6 dBm +/- 2 dB
15	015:Output L	Connect the level meter (with a JIS-C filter) to the [PHONES/AUX OUT] jack. (33 ohm load) Set the [MASTER VOLUME] at maximum. Check the output level (1 kHz). Phones L: -6 dBm +/- 2 dB Phones R: Less than –45 dBm
19	019:Noise	Connect the level meter (with a JIS-C filter) to the [PHONES/AUX OUT] jack. (33 ohm load) Set the [MASTER VOLUME] at maximum. Phones L/R: Less than –80 dBm
20	020:SW Chk	Check the switches on the panel. Press the switches that are displayed on the LCD. A pre-assigned note is output when pressing the switch. The test result appears on the LCD.
21	021:LED ON	Check that the LED on the panel is on.
28	028:LCD On	Check that all LCD dots are on.
29	029:LCD Off	Check that all LCD dots are off. The LCD becomes white.
31	031:PD1 Chk	Connect the foot switch to the [FOOT SWITCH] jack. Check that the C3 note is output when starting the test program. Check that the C4 note is output when pressing the pedal and that the tone is turned off when releasing the pedal. The test result appears on the LCD.
37	037:MIDI Chk	After connecting the [MIDI IN] jack and [MIDI OUT] jack with a MIDI cable, execute the test. Check that the C4 note is output and that the test result appears on the LCD.
40	040:Battery	Check the voltage of the Battery terminal.
41	041:ROM Chk2	Checks the ROM The test result appears on the LCD.
42	042:RAM Chk2	Checks the RAMs that are connected to the CPU. The test result appears on the LCD.
43	043:Wrom Chk2	Checks the WAVE ROMs that are connected to the CPU. The test result appears on the LCD.
44	044:Wram Chk2	Checks all the WAVE RAMs that are connected to the CPU. The test result appears on the LCD.
46	046:Back Up 2	Performs the RAM back-up check. Check that the dieplay reads "NG", then off the power switch. Enter the test program and perform the RAM back-up checks, then check again. Check that the LCD displays "OK". Note: Do not turn on the power switch by normal mode while standing by, or the RAM data will be lost.
47	047:Factory Set	All RAMs are initialized and set to the factory preset data when executing this test. The result appears on the LCD.
48	048:Test Exit	Exit from the test program after executing this test.

2. INITIALIZE

Except for the data listed below, all PSR-340 panel settings are reset to their initial settings whenever the power is turned on. The data listed below are backed up (i.e. retained in the memory) as long as either an AC adaptor is connected or a set of batteries is installed.

- User Song Data
- User One Touch Setting Data
- One Touch Setting Bank Number
- EZ Chord Data
- EZ Chord Bank Number Data
- Smart Chord Number
- Metronome Volume
- Touch On/Off
- Touch Sensitivity
- Split Point
- Accompaniment Split Point
- Footswitch Assign Function

CAUTION

- All one touch setting (user) and song memory data, plus the other settings listed above, will be erased and/or changed when the data initialization procedure is carried out.
- Carrying out the data initialization procedure will usually restore normal operation if the PSR-340 freezes or begins to act erratically for any reason.

Data Initialization

All data can be initialized and restored to the factory preset condition by turning on the power while holding the highest (rightmost) white key on the keyboard. “CLr Backup” will appear briefly on the display.

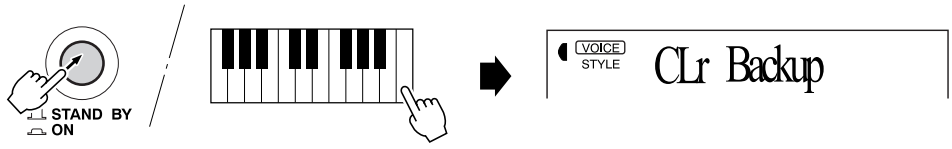

■ MIDI IMPLEMENTATION CHART

[Portable Keyboard]
Model: PSR-340

MIDI Implementation Chart

Date: 1-Mar-1999
Version: 1.0

Function	Transmitted	Recognized	Remarks
Basic Default	1-16	1-16	
Channel Changed	1-16	1-16 *1	
Default	3	3	
Mode Messages	X	X	
Altered	**********	X	
Note	0-127	0-127	
Number : True voice	**********	0-127	
Velocity Note ON	O 9nH, v=1-127	O 9nH, v=1-127	
Note OFF	O 9nH, v=0	X	
After key's	X	X	
Touch Ch's	X	X	
Pitch Bender	X	O 0-12 semi	
Control Change 0, 32	O	O	Bank Select
1	X *2	O	Modulation
7, 10	O	O	
11	X *2	O	Expression
6, 38	X *2	O	Data Entry
64	O	O	Sustain
84	X *2	O	Portamento Control
91, 93, 94	O	O	Effect Depth
96, 97	X	O	Data Inc, Dec
100, 101	X *2	O	RPN LSB, MSB
120	X	O	All Sound Off
121	X	O	Reset All Controllers
Program	O 0-127	O 0-127	
Change : True #	**********		
System Exclusive	O *3	O *3	
System : Song Position	X	X	
: Song Select	X	X	
Common : Tune	X	X	
System : Clock	O	O *4	
Real Time : Commands	O *5	O *5	
: All Sound OFF	X	O (120, 126, 127)	
Aux : Reset All Cntrls	X	O (121)	
: Local ON/OFF	X	X	
: All Notes OFF	X	O (123-125)	
Messages : Active Sense	O	O	
: Reset	X	X	

Mode 1 : OMNI ON, POLY
Mode 2 : OMNI ON, MONO
Mode 3 : OMNI OFF, POLY
Mode 4 : OMNI OFF, MONO

O : Yes
X : No

VOICE LIST

Panel Voice List / Verzeichnis der Bedienfeld-Stimmen / Liste des voix de panneau / Lista de voces del panel

Voice Number	Bank Select MSB	Bank Select LSB	MIDI Program Change#	Voice Name
		PIANO		
001	0	112	0	Grand Piano
002	0	112	1	Bright Piano
003	0	112	3	Honky-tonk Piano
004	0	112	4	Funky Electric Piano
005	0	112	5	DX Electric Piano
006	0	112	2	MIDI Grand Piano
007	0	113	2	CP 80
008	0	113	5	Hyper Electric Piano
009	0	114	5	Bell Electric Piano
010	0	112	6	Harpsichord
011	0	112	7	Clavi
012	0	112	8	Celesta
		MALLET		
013	0	112	11	Vibraphone
014	0	112	12	Marimba
015	0	112	13	Xylophone
016	0	112	14	Tubular Bells
017	0	112	47	Timpani
018	0	112	114	Steel Drums
019	0	112	10	Music Box
		ORGAN		
020	0	112	16	Jazz Organ 1
021	0	113	16	Jazz Organ 2
022	0	112	17	Jazz Organ 3
023	0	116	16	Full Organ
024	0	114	18	Rock Organ 1
025	0	112	18	Rock Organ 2
026	0	118	16	16'+2' Organ
027	0	119	16	16'+4' Organ
028	0	112	19	Church Organ
029	0	112	20	Reed Organ
030	0	112	21	Musette Accordion
031	0	113	21	Traditional Accordion
032	0	113	23	Bandoneon
		GUITAR		
033	0	112	24	Classical Guitar
034	0	112	25	Folk Guitar
035	0	113	25	12Strings Guitar
036	0	112	26	Jazz Guitar
037	0	113	26	Octave Guitar
038	0	112	27	Clean Guitar
039	0	112	28	Muted Guitar
040	0	112	29	Overdriven Guitar
041	0	112	30	Distortion Guitar
		BASS		
042	0	112	32	Acoustic Bass
043	0	112	33	Finger Bass
044	0	112	34	Pick Bass
045	0	112	35	Fretless Bass
046	0	112	36	Slap Bass
047	0	112	38	Synth Bass
048	0	113	38	Techno Bass
049	0	113	39	Dance Bass
		ENSEMBLE		
050	0	112	48	Strings
051	0	112	49	Chamber Strings
052	0	112	50	Synth Strings
053	0	113	49	Slow Strings
054	0	112	44	Tremolo Strings
055	0	112	45	Pizzicato Strings
056	0	112	52	Choir
057	0	113	52	Choir Aahs
058	0	112	53	Choir Oohs
059	0	112	54	Synth Choir
060	0	112	55	Orchestra Hit
		STRINGS		
061	0	112	40	Violin
062	0	112	42	Cello
063	0	112	43	Contrabass
064	0	112	105	Banjo
065	0	112	46	Harp
		BRASS		
066	0	112	56	Trumpet
067	0	112	59	Muted Trumpet
068	0	112	57	Trombone
069	0	113	57	Trombone Section
070	0	112	60	French Horn
071	0	112	58	Tuba
072	0	112	61	Brass Section
073	0	112	62	Synth Brass
074	0	113	62	Jump Brass
075	0	114	62	Techno Brass
		REED		
076	0	112	64	Soprano Sax
077	0	112	65	Alto Sax
078	0	112	66	Tenor Sax
079	0	112	67	Baritone Sax
080	0	112	68	Oboe
081	0	112	69	English Horn
082	0	112	70	Bassoon
083	0	112	71	Clarinet
084	0	112	22	Harmonica
		PIPE		
085	0	112	72	Piccolo
086	0	112	73	Flute
087	0	112	75	Pan Flute
088	0	112	74	Recorder
089	0	112	79	Ocarina
		SYNTH LEAD		
090	0	112	80	Square Lead
091	0	112	81	Sawtooth Lead
092	0	112	85	Voice Lead
093	0	112	98	Crystal
094	0	112	100	Brightness
095	0	115	81	Analog Lead
		SYNTH PAD		
096	0	112	88	Fantasia
097	0	113	100	Bell Pad
098	0	112	91	Xenon Pad
099	0	112	94	Angels
100	0	113	89	Dark Moon
		DRUM KITS		
101	127	0	0	Standard Kit 1
102	127	0	1	Standard Kit 2
103	127	0	8	Room Kit
104	127	0	16	Rock Kit
105	127	0	24	Electronic Kit
106	127	0	25	Analog Kit
107	127	0	27	Dance Kit
108	127	0	32	Jazz Kit
109	127	0	40	Brush Kit
110	127	0	48	Symphony Kit

GM Voice List / Verzeichnis der GM-Stimmen / Liste des voix GM / Lista de voces GM

Voice Number	Bank Select MSB	Bank Select LSB	MIDI Program Change#	Voice Name
		PIANO		
111	0	0	0	Acoustic Grand Piano
112	0	0	1	Bright Acoustic Piano
113	0	0	2	Electric Grand Piano
114	0	0	3	Honky-tonk Piano
115	0	0	4	Electric Piano 1
116	0	0	5	Electric Piano 2
117	0	0	6	Harpsichord
118	0	0	7	Clavi
		CHROMATIC		
119	0	0	8	Celesta
120	0	0	9	Glockenspiel
121	0	0	10	Music Box
122	0	0	11	Vibraphone
123	0	0	12	Marimba
124	0	0	13	Xylophone
125	0	0	14	Tubular Bells
126	0	0	15	Dulcimer
		ORGAN		
127	0	0	16	Drawbar Organ
128	0	0	17	Percussive Organ
129	0	0	18	Rock Organ
130	0	0	19	Church Organ
131	0	0	20	Reed Organ
132	0	0	21	Accordion
133	0	0	22	Harmonica
134	0	0	23	Tango Accordion
		GUITAR		
135	0	0	24	Acoustic Guitar (nylon)
136	0	0	25	Acoustic Guitar (steel)
137	0	0	26	Electric Guitar (jazz)
138	0	0	27	Electric Guitar (clean)
139	0	0	28	Electric Guitar (muted)
140	0	0	29	Overdriven Guitar
141	0	0	30	Distortion Guitar
142	0	0	31	Guitar Harmonics
		BASS		
143	0	0	32	Acoustic Bass
144	0	0	33	Electric Bass (finger)
145	0	0	34	Electric Bass (pick)
146	0	0	35	Fretless Bass
147	0	0	36	Slap Bass 1
148	0	0	37	Slap Bass 2
149	0	0	38	Synth Bass 1
150	0	0	39	Synth Bass 2
		STRINGS		
151	0	0	40	Violin
152	0	0	41	Viola
153	0	0	42	Cello
154	0	0	43	Contrabass
155	0	0	44	Tremolo Strings
156	0	0	45	Pizzicato Strings
157	0	0	46	Orchestral Harp
158	0	0	47	Timpani
		ENSEMBLE		
159	0	0	48	Strings Ensemble 1
160	0	0	49	Strings Ensemble 2
161	0	0	50	Synth Strings 1
162	0	0	51	Synth Strings 2
163	0	0	52	Choir Aahs
164	0	0	53	Voice Oohs
165	0	0	54	Synth Voice
166	0	0	55	Orchestra Hit
		BRASS		
167	0	0	56	Trumpet
168	0	0	57	Trombone
169	0	0	58	Tuba
170	0	0	59	Muted Trumpet
171	0	0	60	French Horn
172	0	0	61	Brass Section
173	0	0	62	Synth Brass 1
174	0	0	63	Synth Brass 2
		REED		
175	0	0	64	Soprano Sax
176	0	0	65	Alto Sax
177	0	0	66	Tenor Sax
178	0	0	67	Baritone Sax
179	0	0	68	Oboe
180	0	0	69	English Horn
181	0	0	70	Bassoon
182	0	0	71	Clarinet
		PIPE		
183	0	0	72	Piccolo
184	0	0	73	Flute
185	0	0	74	Recorder
186	0	0	75	Pan Flute
187	0	0	76	Blown Bottle
188	0	0	77	Shakuhachi
189	0	0	78	Whistle
190	0	0	79	Ocarina
		SYNTH LEAD		
191	0	0	80	Lead 1 (square)
192	0	0	81	Lead 2 (sawtooth)
193	0	0	82	Lead 3 (calliope)
194	0	0	83	Lead 4 (chiff)
195	0	0	84	Lead 5 (charang)
196	0	0	85	Lead 6 (voice)
197	0	0	86	Lead 7 (fifth)
198	0	0	87	Lead 8 (bass+Lead)
		SYNTH PAD		
199	0	0	88	Pad 1 (new age)
200	0	0	89	Pad 2 (warm)
201	0	0	90	Pad 3 (polysynth)
202	0	0	91	Pad 4 (choir)
203	0	0	92	Pad 5 (bowed)
204	0	0	93	Pad 6 (metallic)
205	0	0	94	Pad 7 (halo)
206	0	0	95	Pad 8 (sweep)
		SYNTH EFFECTS		
207	0	0	96	FX 1 (rain)
208	0	0	97	FX 2 (soundtrack)
209	0	0	98	FX 3 (crystal)
210	0	0	99	FX 4 (atmosphere)
211	0	0	100	FX 5 (brightness)
212	0	0	101	FX 6 (goblins)
213	0	0	102	FX 7 (echoes)
214	0	0	103	FX 8 (sci-fi)
		ETHNIC		
215	0	0	104	Sitar
216	0	0	105	Banjo
217	0	0	106	Shamisen
218	0	0	107	Koto
219	0	0	108	Kalimba
220	0	0	109	Bagpipe

Voice Number	Bank Select		MIDI Program Change#	Voice Name
	MSB	LSB		
221	0	0	110	Fiddle
222	0	0	111	Shanai
PERCUSSIVE				
223	0	0	112	Tinkle Bell
224	0	0	113	Agogo
225	0	0	114	Steel Drums
226	0	0	115	Woodblock
227	0	0	116	Taiko Drum
228	0	0	117	Melodic Tom
229	0	0	118	Synth Drum
230	0	0	119	Reverse Cymbal

Voice Number	Bank Select		MIDI Program Change#	Voice Name
	MSB	LSB		
SOUND EFFECTS				
231	0	0	120	Guitar Fret Noise
232	0	0	121	Breath Noise
233	0	0	122	Seashore
234	0	0	123	Bird Tweet
235	0	0	124	Telephone Ring
236	0	0	125	Helicopter
237	0	0	126	Applause
238	0	0	127	Gunshot

STYLE LIST

Style Number	Style Name
8BEAT	
001	8Beat Pop 1
002	8Beat Pop 2
003	8Beat Uptempo
004	8Beat Standard
005	Folkrock
006	Pop Rock
007	8Beat Medium
008	8Beat Ballad
009	Epic Ballad
010	Piano Ballad
16BEAT	
011	16Beat Shuffle 1
012	16Beat Shuffle 2
013	16Beat Pop
014	Funk 1
015	16Beat Ballad 1
016	16Beat Ballad 2
017	Soul Ballad
6/8 BALLAD	
018	Slow Rock 1
019	Slow Rock 2
020	6/8 Ballad
DANCE	
021	Dance Pop 1
022	Dance Pop 2
023	Techno
024	Eurobeat
025	Euro House
026	Hip Hop
027	Synth Boogie

Style Number	Style Name
DISCO	
028	70s Disco
029	Disco Tropical
030	Polka Pop
ROCK	
031	8Beat Rock Ballad
032	16Beat Rock Ballad
033	Hard Rock
034	Rock Shuffle
035	6/8 Heavy Rock
036	US Rock
ROCK & ROLL	
037	Rock & Roll 1
038	Rock & Roll 2
039	Boogie
040	Twist
RHYTHM & BLUES	
041	R&B
042	Funk 2
043	Soul
044	Gospel Shuffle
045	6/8 Gospel
046	4/4 Blues
CONTEMPORARY JAZZ	
047	Cool Jazz
048	Jazz Ballad
049	Jazz Waltz
050	Fusion

Style Number	Style Name
TRADITIONAL JAZZ	
051	Swing
052	Big Band Swing
053	Big Band Ballad
054	Jazz Quartet
055	Dixieland
AMERICAS	
056	Cajun
057	Banda
058	Mariachi
059	Tejano
060	Cumbia
COUNTRY & WESTERN	
061	Bluegrass
062	Country 2/4
063	Country Rock
064	Country Ballad
065	Country Shuffle
066	Country Waltz
BALLROOM LATIN	
067	Cha Cha
068	Rhumba
069	Pasodoble
070	Tango Continental
BALLROOM STANDARD	
071	Foxtrot
072	Jive

Style Number	Style Name
MARCH & WALTZ	
073	March 1
074	March 2
075	6/8 March
076	Polka
077	Standard Waltz
078	German Waltz
079	Viennese Waltz
080	Musette Waltz
LATIN	
081	Bossa Nova 1
082	Bossa Nova 2
083	Salsa
084	Samba
085	Mambo
086	Beguine
087	Merengue
088	Bolero Lento
CARIBBEAN	
089	Reggae 12
090	Pop Reggae
PIANIST	
091	Rock-a-Ballad
092	8Beat
093	Swing
094	Jazz Ballad
095	2Beat
096	Boogie
097	Ragtime
098	Arpeggio
099	Waltz
100	Happy

101	Disk Style

PORTATONE

PSR-340

PARTS LIST

■ **CONTENTS**

OVERALL ASSEMBLY 2
KEYBOARD ASSEMBLY 4
FLOPPY DISK DRIVE ASSEMBLY 4
ELECTRICAL PARTS 5

Note) DESTINATION ABBREVIATIONS

A : Australian model	M : South African model
B : British model	O : Chinese model
C : Canadian model	Q : South-east Asia model
D : German model	T : Taiwan model
E : European model	U : U.S.A. model
F : French model	V : General export model (110V)
H : North European model	W : General export model (220V)
I : Indonesian model	N,X: General export model
J : Japanese model	Y : Export model

■ WARNING

Components having special characteristics are marked ⚠ and must be replaced with parts having specifications equal to those originally installed.

- The numbers in “QTY” shows quantities for each unit.
- The parts with “– –” in “Part No.” are not available as spare parts.
- This mark “ }” in the REMARKS column means these parts are interchangeable.
- The second letter of the shaded ( ) part number is I, not one.

OVERALL ASSEMBLY

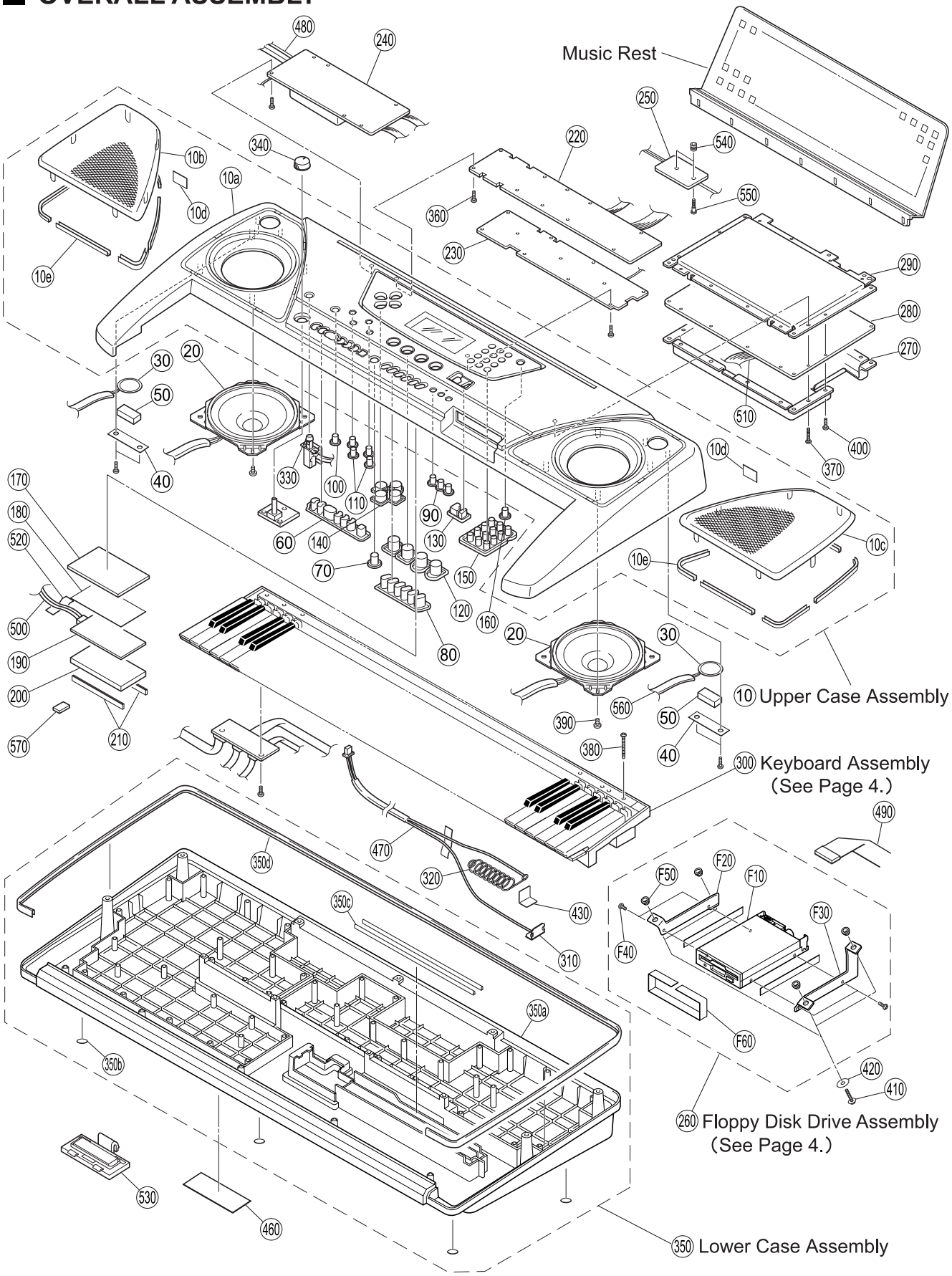

	REF NO.	PART NO.	DESCRIPTION		部 品 名	REMARKS	QTY	RANK
			OVERALL ASSEMBLY			PSR-340		
		--	Overall Assembly			U,W,C,O,J (V362860)		
*	10	V3628200	Upper Case Assembly					
	10a	--	Upper Case			(V362830)		
*	10b	V3626600	SP Grille	LEFT				
*	10c	V3626700	SP Grille	RIGHT				
	10d	VJ861500	Vibration-proof Tape	18X25			2	03
	10e	--	Spacer			(V338570)	12	
*	20	XV946A00	Speaker	12.0cm 4ohm 6W			2	
*	30	XV947A00	Speaker	3.0cm			2	
	40	--	Band			(V364540)	2	
	50	--	Sponge			(V364550)	2	
	60	V3339400	Rubber Contact	K99		ACMP ON/OFF,SYNC-START, START/STOP,INTRO/ENDING, MAIN A,MAIN B,CHORD GUIDE		
	70	V3339300	Rubber Contact	J99		RECORD		
	80	V3338400	Rubber Contact	A99		SONG MEMORY,SONG TRACK (1 to 4,5A,6A)		
*	90	V3634700	Rubber Contact	B340		LOAD,SAVE,UTYLITY		
	100	V3338600	Rubber Contact	C99		DEMO		
*	110	V3634600	Rubber Contact	A340		REVERB,HARMONY,TOUCH,DUAL	4	
	120	V3635000	Rubber Contact	R99		SONG,VOICE,STYLE,FUNCTION	4	
	130	V2117400	Rubber Contact	C79		PORTABLE GRAND,METRONOME		02
	140	V3635200	Rubber Contact	S99		(▲,▼,+,-)		
	150	V3638900	Rubber Contact	T99		1 to 9,+,0,-		
*	160	V3638600	Rubber Contact	A340EX		EXECUTE		
	170	V3383300	LCD	TTR1817DPTDCN				
	180	V3383800	Diffusion Sheet B	PET				01
	190	V3384700	EL Light	NELTA3115G(A2)				06
	200	--	EL Supporter B	PE		(V338360)		
*	210	V3755900	Rubber Connector	SS-105L			2	
*	220	V3549800	Circuit Board	LCD				
*	230	V3549900	Circuit Board	PN				
*	240	V3549700	Circuit Board	AM				
	250	V3480900	Circuit Board	INV				
	260	--	Floppy Disk Drive Assembly			(V447260) (V362610)		
	270	--	Shield box	LOWER		(V362720)		
*	280	V3549600	Circuit Board	DM				
	290	--	Shield box	UPPER		(V362730)		
	300	V2386100	Keyboard Assembly	16M C61 MKS3				
	310	VI663700	Terminal					
	320	VI865800	Spring Terminal					
	330	VQ218800	Knob			STANDBY/ON		03
	340	VU432400	Knob			MASTER VOLUME		01
*	350	V3645000	Lower Case Assembly					
	350a	--	Lower Case			(V364480)		
	350b	CB043750	Foot	BL T1.6			5	01
	350c	VJ790400	Vibration-proof Tape	10X290X0.2			2	03
	350d	--	Seal tape			(VY84410)		
	360	EP600280	Bind Head Tapping Screw-P	3.0X8 MFZN2Y			37	01
	370	EP600300	Bind Head Tapping Screw-P	3.0X12 MFZN2Y			16	01
	380	VK228100	Bind Head Tapping Screw-P	3.0X25 MFZN2Y			6	01
	390	VB931600	Bind Head Tapping Screw-P	4.0X8 MFZN2BL			8	01
	400	EP600250	Bind Head Tapping Screw-B	3.0X8 MFZN2Y			12	01
	410	VD964600	BW Head Tapping Screw-P	3.0X10 MFZN2Y			4	01
	420	VS730200	Flat Washer	3.5X12 0.8 MFZN2			4	01
	430	VJ861500	Vibration-proof Tape	18X25			2	03
	460	--	Label			(V362770)		
	470	--	Connector Assembly	BATT		(V364610)		
*	480	V4569400	Connector Assembly	FDD POWER				
*	490	V3819800	Cable Assembly	FDD				
	500	--	Connector Assembly	EL-INV		(V388860)		
	510	--	Connector Assembly	6P DM-MKS		(V388900)		
	520	VA126100	Adhesive Tape	12X50			14	03
	530	VM754600	Battery Cover Assembly	KB200				
*	540	V3766800	INV Bush				2	
*	550	V3817600	Tight Screw-B	3.0X14 MFZN2BL			2	
	560	--	Vibration-proof Sponge			(V386830)	2	
	570	--	EL Supporter U			(V383700)		

*** : New parts** **RANK : Japan only**

	REF NO.	PART NO.	DESCRIPTION		部 品 名	REMARKS		RANK
			ACCESSORIES					
		VU469500	Music Rest					
⚠		VU113800	AC Adaptor	PA-5C J		J		
⚠	*	VY944500	AC Adaptor	PA-51 CH		O		
	*	V3629600	Japanese Guide Sheet			J		
	*	V3644300	Chinese Guide Sheet			O		
	*	V3760400	Floppy Disk	3.5"		J,C,W,O		
	*	V4163000	Floppy Disk	3.5"		U		

*** : New parts** **RANK : Japan only**

■ KEYBOARD ASSEMBLY

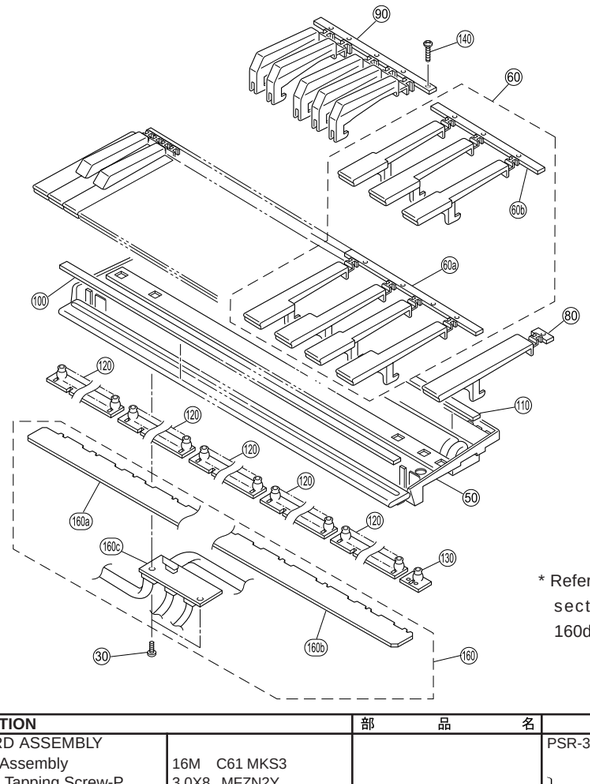

* Refer to the CIRCUIT BOARD LAYOUT section of this manual regarding 160d,160e,160f,160g cables.

REF NO.	PART NO.	DESCRIPTION		部 品 名	REMARKS	QTY	RANK
		KEYBOARD ASSEMBLY			PSR-340		
	V2386100	Keyboard Assembly	16M C61 MKS3				
30	**EP600280**	Bind Head Tapping Screw-P	3.0X8 MFZN2Y			2	01
30	**EP630220**	Bind Head Tapping Screw-P	3.0X8 MFZN2BL			2	01
50	**--**	Frame	C61		(VS15380)		
60	**VH1809C0**	White Keys	16L CEGBDFA			5	05
60a	**--**	White Keys	16L CEGB		(VH18090)	5	
60b	**--**	White Keys	16L DFA		(VH18100)	5	
80	**VH181100**	White Key	16L C'				01
90	**VH181200**	Black Keys	16L #			5	03
100	**VH181300**	Felt					03
110	**VH181400**	Rubber Sheet					01
120	**VU328400**	Rubber Contact	16M OCT 2M 12KEYS			5	06
130	**VU328500**	Rubber Contact	16M C' 2M 1KEY				05
140	**EP600310**	Bind Head Tapping Screw-P	3.0X16 MFZN2Y			21	01
140	**VB205200**	Bind Head Tapping Screw-P	3.0X16 MFZN2BL			21	01
140	**VS756700**	Bind Head Tapping Screw-P	3.0X16 MFZN2B			21	01
150	**TX920280**	Grease	G-31KA				10
160	**--**	Circuit Board Assembly	KBS SW		(V240470)		
160a	**VV583800**	Circuit Board	MK-L				09
160b	**VV583900**	Circuit Board	MK-H				09
160c	**V2404900**	Circuit Board	MKS3				10
160d	**VV583100**	Cable	12 MK-A				
160e	**VV583600**	Cable	12 MK-B				
160f	**VV583500**	Cable	7 MK-C				
160g	**VV583700**	Cable	5 MK-D				
160h	**--**	Sponge A	16M		(VV61890)	2	
160i	**--**	Sponge B	16M		(VV61900)	2	
160j	**--**	Adhesive Tape	12		(VV61910)		
160k	**--**	Adhesive Tape	12		(VV61920)	3	

*** : New parts** **RANK : Japan only**

■ FLOPPY DISK ASSEMBLY

- **Bottom View**

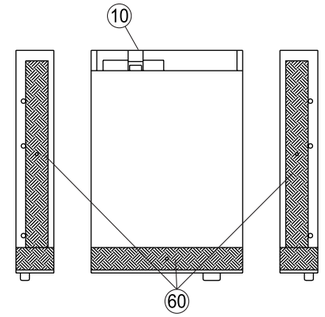

- **Top & Side View**

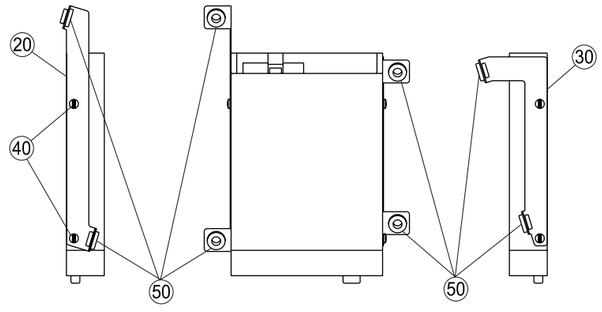

REF NO.	PART NO.	DESCRIPTION		部 品 名	REMARKS	QTY	RANK
		FLOPPY DISK DRIVE ASSEMBLY			PSR-340		
	--	Floppy Disk Drive Assembly			(V447260) (V362610)		
10	**V2043400**	Floppy Disk Drive	D359M3				16
10	**V3075300**	Floppy Disk Drive	MF355F-3252MG F				16
20	**--**	Holder, FDD	LEFT		(V362620)		
30	**--**	Holder, FDD	RIGHT		(V362630)		
40	**EG330150**	Bind Head Screw	3.0X5 MFZN2Y			4	01
50	**VA121600**	Bushing				4	01
60	**--**	Adhesive Tape	ECT #590S W=15		(ZL35000)		

*** : New parts** **RANK : Japan only**

ELECTRICAL PARTS

	REF NO.	PART NO.	DESCRIPTION		部品名	REMARKS	QTY	RANK
			ELECTRICAL PARTS			PSR-340		
*		**V3549700**	Circuit Board	AM		(XV843C0)		
*		**V3549600**	Circuit Board	DM		(XV842B0)		
		V3480900	Circuit Board	INV		(XV707C0)		
*		**V3549800**	Circuit Board	LCD		(XW242A0)		
*		**V3549900**	Circuit Board	PN		(XW242A0)		
		VV583800	Circuit Board	MK-L		(VV70110)		09
		VV583900	Circuit Board	MK-H		(VV70120)		09
		V2404900	Circuit Board	16M KBS		(XU878B0)		10
*		**V3549700**	Circuit Board	AM		(XV843C0)		
		EP600190	Bind Head Tapping Screw-B	3.0X8 MFZN2BL				01
		VA078900	Jumper Wire	0.55				
	C603	**VC694800**	Semiconductive Cera. Cap.	0.1 25V Z				01
	C801	**VT757800**	Monolithic Ceramic Cap.	1.000 25V Z				01
	C802	**VT757800**	Monolithic Ceramic Cap.	1.000 25V Z				01
	C803	**FG612270**	Ceramic Capacitor-B	270P 50V K				01
	C804	**FG612270**	Ceramic Capacitor-B	270P 50V K				01
	C807	**UR828100**	Electrolytic Cap.	100.00 10.0V				01
	C808	**UR827330**	Electrolytic Cap.	33.00 10.0V				01
	C809	**UR837220**	Electrolytic Cap.	22.00 16.0V				01
	C810	**VC694800**	Semiconductive Cera. Cap.	0.1 25V Z				01
	C811	**UR848100**	Electrolytic Cap.	100.00 25.0V				01
	C812	**UA354470**	Mylar Capacitor	0.047 50V J				
	-815	**UA354470**	Mylar Capacitor	0.047 50V J				
	C812	**UA654470**	Mylar Capacitor	0.047 50V J				01
	-815	**UA654470**	Mylar Capacitor	0.047 50V J				01
	C816	**UR837470**	Electrolytic Cap.	47.00 16.0V				01
	C817	**UR837470**	Electrolytic Cap.	47.00 16.0V				01
	C818	**FG613100**	Ceramic Capacitor-B	1000P 50V K				01
	C901	**UR828100**	Electrolytic Cap.	100.00 10.0V				01
	C902	**VC694800**	Semiconductive Cera. Cap.	0.1 25V Z				01
	C903	**UR867100**	Electrolytic Cap.	10.00 50.0V				01
	C905	**UR819100**	Electrolytic Cap.	1000 6.3V				01
	C906	**FG612330**	Ceramic Capacitor-B	330P 50V K				01
	C907	**UR848100**	Electrolytic Cap.	100.00 25.0V				01
	C908	**VK373000**	Electrolytic Cap.	4700 25.0V				03
	C910	**FG613100**	Ceramic Capacitor-B	1000P 50V K				01
	CN602	**VI878400**	Cable Holder	51048 6P TE				01
	CN801	**VI878300**	Cable Holder	51048 5P TE				01
	CN802	**VI878100**	Cable Holder	51048 3P TE				01
	CN803	**VI878100**	Cable Holder	51048 3P TE				01
	CN804	**VI878300**	Cable Holder	51048 5P TE				01
	CN805	**VI878300**	Cable Holder	51048 5P TE				01
	CN901	**VI878500**	Cable Holder	51048 7P TE				01
	CN902	**VI878200**	Cable Holder	51048 4P TE				01
	CN903	**LB918020**	Base Post Connector	XH 2P TE				01
	CN904	**VI878200**	Cable Holder	51048 4P TE				01
	CN905	**VI878000**	Cable Holder	51048 2P TE				01
	CN906	**LB918020**	Base Post Connector	XH 2P TE				01
⚠	D901	**VL723600**	Diode	20E1-FC4				01
⚠	D901	**VY717100**	Diode	LT2A02-E				01
⚠	D902	**VL723600**	Diode	20E1-FC4				01
⚠	D902	**VY717100**	Diode	LT2A02-E				01
	D903	**VD631600**	Diode	1SS133,176,HSS104				01
	D904	**VB481900**	Diode	11ES4				01
*	D905	**V2320300**	Diode	RK33				
	HS001	**VV856400**	Heat Sink					05
	IC801	**XQ619A00**	IC	LA4705NA		POWER AMP. 17W		05
	IC901	**XT625A00**	IC	S-81250SGY-Z		REGULATOR +5V		02
*	IC902	**XV856A00**	IC	M5291P		DC-DC CONVERTER		
	J901	**VA078900**	Jumper Wire	0.55				
	JK601	**VB312600**	Phone Jack	YKB21-5012		FOOT SWITCH		02
	JK602	**VJ107200**	DIN Connector	5P YKF51-5050		MIDI OUT		01
	JK603	**VJ107200**	DIN Connector	5P YKF51-5050		MIDI IN		01
	JK801	**LB101870**	Phone Jack	YKB21-5006		PHONES/OUTPUT		03
⚠	JK901	**VC664500**	Connector	HEC2305		DC-IN		01
	L601	**VA078900**	Jumper Wire	0.55				
	L603	**VA078900**	Jumper Wire	0.55				
	-606	**VA078900**	Jumper Wire	0.55				

*** : New parts** **RANK : Japan only**

	REF NO.	PART NO.	DESCRIPTION		部品名	REMARKS	QTY	RANK
	L608	**VA078900**	Jumper Wire	0.55				
	-610	**VA078900**	Jumper Wire	0.55				
	L801	**VB835000**	Coil	FL5R200QNT		}		01
	L801	**VF968800**	Coil	SBT-0260TF		}		01
	L802	**VB835000**	Coil	FL5R200QNT		}		01
	L802	**VF968800**	Coil	SBT-0260TF		}		01
	L803	**VA078900**	Jumper Wire	0.55				
⚠	L901	**VA486800**	Line Filter	SU10VD-20020				03
	L902	**VZ060700**	Choke Coil	220U ELC15E221 15E				05
	R603	**HF455220**	Carbon Resistor	220.0 1/4 J				01
	R801	**HF457270**	Carbon Resistor	27.0K 1/4 J				01
	R802	**HF457270**	Carbon Resistor	27.0K 1/4 J				01
	R803	**HF456680**	Carbon Resistor	6.8K 1/4 J				01
	R804	**HF456680**	Carbon Resistor	6.8K 1/4 J				01
	R805	**HF457100**	Carbon Resistor	10.0K 1/4 J				01
	R806	**HF453220**	Carbon Resistor	2.2 1/4 J				01
	-809	**HF453220**	Carbon Resistor	2.2 1/4 J				01
	R810	**HF455100**	Carbon Resistor	100.0 1/4 J				01
	R811	**HF455100**	Carbon Resistor	100.0 1/4 J				01
	R813	**HF455330**	Carbon Resistor	330.0 1/4 J				01
	R814	**HF455330**	Carbon Resistor	330.0 1/4 J				01
	R901	**HF456100**	Carbon Resistor	1.0K 1/4 J				01
	R902	**HF455330**	Carbon Resistor	330.0 1/4 J				01
	R903	**VC745000**	Metal Oxide Film Resistor	100.0 1W J				01
	R904	**HF456390**	Carbon Resistor	3.9K 1/4 J				01
	R905	**HF456120**	Carbon Resistor	1.2K 1/4 J				01
*	R906	**V3648000**	Metal Film Resistor	0.15 1W J				
⚠	SW901	**VY980400**	Push Switch	SDDLB1 J,UC,CEE		STANDBY/ON		03
⚠	TH901	**VV458000**	Protector Switch	RUE250 2.50A 30V				03
*	TR901	**V3795100**	Transistor	2SA2006 E,F				
	VR801	**VZ048400**	Rotary Variable Resistor	A10.0K XV0141GPVN2		MASTER VOLUME		02
	W001	**- -**	GND Wire			(V414220)		
	W002	**- -**	GND Wire Assembly			(V427400)		
	W0602	**- -**	Connector Assembly	6P DM-MIDI		(V364680)		
	W0801	**- -**	Connector Assembly	5P AM-MVR		(V456950)		
	W0802	**- -**	Connector Assembly	SP-R		(V388890)		
	W0803	**- -**	Connector Assembly	SP-L		(V388880)		
	W0805	**- -**	Connector Assembly	5P DM-MVR		(V364700)		
	W0901	**- -**	Connector Assembly	7P DM-POWER		(V364690)		
	W0902	**- -**	Connector Assembly	4P AM-PSW		(V364740)		
	W0905	**- -**	Connector Assembly	2P AM-INV		(V388930)		
	ZD901	**VG439500**	Zener Diode	MTZ J 10.0B 10.0V				01
*		**V3549600**	Circuit Board	DM		(XV842B0)		
		EP600190	Bind Head Tapping Screw-B	3.0X8 MFZN2BL				01
	C101	**UR828100**	Electrolytic Cap.	100.00 10.0V				01
	C102	**VC694800**	Semiconductive Cera. Cap.	0.1 25V Z				01
	C104	**FG652100**	Ceramic Capacitor-SL	100P 50V J				01
	C105	**VC694800**	Semiconductive Cera. Cap.	0.1 25V Z				01
	C106	**UR828100**	Electrolytic Cap.	100.00 10.0V				01
	C107	**VC694800**	Semiconductive Cera. Cap.	0.1 25V Z				01
	-109	**VC694800**	Semiconductive Cera. Cap.	0.1 25V Z				01
	C110	**UR828100**	Electrolytic Cap.	100.00 10.0V				01
	C111	**UR828100**	Electrolytic Cap.	100.00 10.0V				01
	C112	**VC694800**	Semiconductive Cera. Cap.	0.1 25V Z				01
	C113	**UR828100**	Electrolytic Cap.	100.00 10.0V				01
	C114	**VC694800**	Semiconductive Cera. Cap.	0.1 25V Z				01
	C115	**UR828100**	Electrolytic Cap.	100.00 10.0V				01
	C116	**VC694800**	Semiconductive Cera. Cap.	0.1 25V Z				01
	C117	**UR828100**	Electrolytic Cap.	100.00 10.0V				01
	C118	**VC694800**	Semiconductive Cera. Cap.	0.1 25V Z				01
	C119	**UR828100**	Electrolytic Cap.	100.00 10.0V				01
	C121	**FG613100**	Ceramic Capacitor-B	1000P 50V K				01
	C201	**VC694800**	Semiconductive Cera. Cap.	0.1 25V Z				01
	C204	**VC694800**	Semiconductive Cera. Cap.	0.1 25V Z				01
	C301	**VC694800**	Semiconductive Cera. Cap.	0.1 25V Z				01
	C302	**VC694800**	Semiconductive Cera. Cap.	0.1 25V Z				01
	C303	**UR828100**	Electrolytic Cap.	100.00 10.0V				01
	C304	**VC694800**	Semiconductive Cera. Cap.	0.1 25V Z				01
	-306	**VC694800**	Semiconductive Cera. Cap.	0.1 25V Z				01

*** : New parts** **RANK : Japan only**

	REF NO.	PART NO.	DESCRIPTION		部品名	REMARKS	QTY	RANK
	C307	**UR828100**	Electrolytic Cap.	100.00 10.0V				01
	C501	**VC694800**	Semiconductive Cera. Cap.	0.1 25V Z				01
	C502	**UR818220**	Electrolytic Cap.	220.00 6.3V				01
	C503	**UR837470**	Electrolytic Cap.	47.00 16.0V				01
	C504	**FG613220**	Ceramic Capacitor-B	2200P 50V K				01
	C505	**FG613220**	Ceramic Capacitor-B	2200P 50V K				01
	C506	**FG612220**	Ceramic Capacitor-B	220P 50V K				01
	C507	**FG612220**	Ceramic Capacitor-B	220P 50V K				01
	C508	**FG612330**	Ceramic Capacitor-B	330P 50V K				01
	C509	**FG612330**	Ceramic Capacitor-B	330P 50V K				01
	C510	**UR866470**	Electrolytic Cap.	4.7 50.0V				01
	C511	**UR866470**	Electrolytic Cap.	4.7 50.0V				01
	C512	**VC694800**	Semiconductive Cera. Cap.	0.1 25V Z				01
	C514	**UR837470**	Electrolytic Cap.	47.00 16.0V				01
	C515	**FG652100**	Ceramic Capacitor-SL	100P 50V J				01
	C516	**FG652100**	Ceramic Capacitor-SL	100P 50V J				01
	C517	**UR867100**	Electrolytic Cap.	10.00 50.0V				01
	C518	**VC694800**	Semiconductive Cera. Cap.	0.1 25V Z				01
	C519	**VC694800**	Semiconductive Cera. Cap.	0.1 25V Z				01
	C601	**VC694800**	Semiconductive Cera. Cap.	0.1 25V Z				01
	C702	**VC694800**	Semiconductive Cera. Cap.	0.1 25V Z				01
	CA101	**VH483900**	Ceramic Capacitor Array	100P 50V M				01
	CA701	**VH484100**	Ceramic Capacitor Array	100P 50V M				02
	CA702	**VH484100**	Ceramic Capacitor Array	100P 50V M				02
	CL101	**V2192500**	Ceramic Resonator	8.4672M CST8.46MT				01
	CL304	**VK966200**	Ceramic Resonator	16.0M CST16.00MXW0				02
	CN101	**VK025100**	Wire Trap	52147 7P TE				01
	CN102	**VF728300**	Wire Trap	52147 6P TE				01
	CN301	**VQ391300**	Connector	34P TE				03
*	CN301	**V3858700**	Connector Header	302A 34P TE				03
	CN501	**VK024900**	Wire Trap	52147 5P TE				01
	CN601	**VF728300**	Wire Trap	52147 6P TE				01
	CN701	**VK025200**	Wire Trap	52147 8P TE				01
	CN702	**VF728200**	Wire Trap	52147 10P TE				01
	CN707	**VK024600**	Wire Trap	52147 2P TE				01
	D0601	**VD631600**	Diode	1SS133,176,HSS104				01
	EM101	**VD542700**	EMI Filter	DSS306-93F223Z1				01
	EM102	**VD542700**	EMI Filter	DSS306-93F223Z1				01
	EM103	**VB835000**	Coil	FL5R200QNT				01
	EM103	**VF968800**	Coil	SBT-0260TF				01
	IC101	**XU947A00**	IC	HG73C205FD				09
*	IC101	**XU947C00**	IC	HG73C205AFD		SWX00B		
	IC102	**XT333A00**	IC	UPC29M33HF		REGULATOR +3.3V		03
	IC103	**XR902A00**	IC	IC-PST591D-2		RESET		02
*	IC201	**XV898100**	IC	LH537U2A		ROM 16M WAVE		
	IC204	**XT810A00**	IC	MSM514260C-60TS-K				16
*	IC204	**XV975A00**	IC	LH6C4265BS-40		DRAM 4M		
*	IC204	**XW125A00**	IC	SDM4260CLTM-6S				
	IC301	**XT138A00**	IC	UPD431000AGW-70LL				07
	IC301	**XV379A00**	IC	GM76C8128CLLFW-70		SRAM 1M		07
	IC301	**XV976A00**	IC	M5M51008CFP-70H				07
	IC302	**XT138A00**	IC	UPD431000AGW-70LL				07
	IC302	**XV379A00**	IC	GM76C8128CLLFW-70		SRAM 1M		07
	IC302	**XV976A00**	IC	M5M51008CFP-70H				07
*	IC303	**XV897100**	IC	LH537U2C		ROM 16M PROGRAM		
	IC303	**VK863100**	IC Socket	DICF-42CS-E				03
	IC304	**XI939A00**	IC	HD63266F		FDC		09
	IC501	**XR998A00**	IC	UPD6379AGR				04
	IC501	**XR999A00**	IC	BU9480F		DAC		04
	IC502	**XC520A00**	IC	UPC4570C		OP AMP		01
	IC503	**XT625A00**	IC	S-81250SGY-Z		REGULATOR +5V		02
	IC601	**VG181900**	Photo Coupler	PC-900V				03
	J501	**HF454100**	Carbon Resistor	10.0 1/4 J				01
	L105	**VB835000**	Coil	FL5R200QNT				01
	-108	**VB835000**	Coil	FL5R200QNT				01
	L105	**VF968800**	Coil	SBT-0260TF				01
	-108	**VF968800**	Coil	SBT-0260TF				01
	L511	**VA078900**	Jumper Wire	0.55				
	L602	**VA078900**	Jumper Wire	0.55				
	L701	**VD542700**	EMI Filter	DSS306-93F223Z1				01

*** : New parts** **RANK : Japan only**

	REF NO.	PART NO.	DESCRIPTION		部品名	REMARKS	QTY	RANK
	L702	**VB835000**	Coil	FL5R200QNT		}		01
	L702	**VF968800**	Coil	SBT-0260TF		}		01
	R101	**HF457470**	Carbon Resistor	47.0K 1/4 J				01
	R102	**HF455220**	Carbon Resistor	220.0 1/4 J				01
	R103	**HF457100**	Carbon Resistor	10.0K 1/4 J				01
	R104	**HF454470**	Carbon Resistor	47.0 1/4 J				01
	-108	**HF454470**	Carbon Resistor	47.0 1/4 J				01
	R111	**HF454470**	Carbon Resistor	47.0 1/4 J				01
	R112	**HF454470**	Carbon Resistor	47.0 1/4 J				01
	R114	**HF454470**	Carbon Resistor	47.0 1/4 J				01
	R116	**HF457470**	Carbon Resistor	47.0K 1/4 J				01
	R117	**HF458100**	Carbon Resistor	100.0K 1/4 J				01
	R118	**HF458100**	Carbon Resistor	100.0K 1/4 J				01
	R119	**HF454470**	Carbon Resistor	47.0 1/4 J				01
	-121	**HF454470**	Carbon Resistor	47.0 1/4 J				01
	R122	**HF457820**	Carbon Resistor	82.0K 1/4 J				01
	R123	**HF457220**	Carbon Resistor	22.0K 1/4 J				01
	R124	**HF457220**	Carbon Resistor	22.0K 1/4 J				01
	R125	**HF454470**	Carbon Resistor	47.0 1/4 J				01
	R126	**HF454470**	Carbon Resistor	47.0 1/4 J				01
	R301	**HF457470**	Carbon Resistor	47.0K 1/4 J				01
	R303	**HF456100**	Carbon Resistor	1.0K 1/4 J				01
	-307	**HF456100**	Carbon Resistor	1.0K 1/4 J				01
	R308	**HF457470**	Carbon Resistor	47.0K 1/4 J				01
	-312	**HF457470**	Carbon Resistor	47.0K 1/4 J				01
	R501	**HF456220**	Carbon Resistor	2.2K 1/4 J				01
	R502	**HF456220**	Carbon Resistor	2.2K 1/4 J				01
	R503	**HF457220**	Carbon Resistor	22.0K 1/4 J				01
	-508	**HF457220**	Carbon Resistor	22.0K 1/4 J				01
	R511	**HF455100**	Carbon Resistor	100.0 1/4 J				01
	R512	**HF454470**	Carbon Resistor	47.0 1/4 J				01
	R513	**HF454470**	Carbon Resistor	47.0 1/4 J				01
	R601	**HF455220**	Carbon Resistor	220.0 1/4 J				01
	R604	**HF455220**	Carbon Resistor	220.0 1/4 J				01
	R605	**HF457100**	Carbon Resistor	10.0K 1/4 J				01
	R607	**HF457220**	Carbon Resistor	22.0K 1/4 J				01
	R608	**HF456270**	Carbon Resistor	2.7K 1/4 J				01
	R609	**HF457470**	Carbon Resistor	47.0K 1/4 J				01
	R610	**HF456100**	Carbon Resistor	1.0K 1/4 J				01
	R701	**HF455100**	Carbon Resistor	100.0 1/4 J				01
	-710	**HF455100**	Carbon Resistor	100.0 1/4 J				01
	R711	**HF455180**	Carbon Resistor	180.0 1/4 J				01
	RA701	**VG733700**	Resistor Array	EXB-Z09E 47K X 8				01
*	RA702	**V3988800**	Resistor Array	RGLE6Y101J				
*	TR101	**VS885800**	Transistor	2SC3311A Q,R,S				
*	TR601	**VS885800**	Transistor	2SC3311A Q,R,S				
*	TR602	**VS885800**	Transistor	2SC3311A Q,R,S				
		V3480900	Circuit Board	INV		(XV707C0)		
	C906	**VC694800**	Semiconductive Cera. Cap.	0.1 25V Z				01
	C907	**UR867100**	Electrolytic Cap.	10.00 50.0V				01
	C909	**UR867100**	Electrolytic Cap.	10.00 50.0V				01
	C910	**VC694800**	Semiconductive Cera. Cap.	0.1 25V Z				01
	C911	**UA654470**	Mylar Capacitor	0.047 50V J				01
	C912	**UR867100**	Electrolytic Cap.	10.00 50.0V				01
	CN905	**VK024700**	Wire Trap	52147 3P TE				01
	CN906	**VK024600**	Wire Trap	52147 2P TE				01
	IC902	**XU814A00**	IC	PQ05RD11		REGULATOR +5V		03
	L903	**V2889500**	Coil	R-5C. 20U				
	R902	**HF756680**	Carbon Resistor	6.8K 1/4 J				01
	R903	**HF755100**	Carbon Resistor	100.0 1/4 J				01
	T901	**V3347700**	Inverter Transformer	TRS-D3-323(1)				04
	TR901	**V3375500**	Transistor	2SC3581 E				01
*		**V3549800**	Circuit Board	LCD		(XW242A0)		
*		**V3549900**	Circuit Board	PN		(XW242A0)		
		VA078900	Jumper Wire	0.55				
	C707	**UR828100**	Electrolytic Cap.	100.00 10.0V				01
	C708	**VC694800**	Semiconductive Cera. Cap.	0.1 25V Z				01
	C709	**VC694800**	Semiconductive Cera. Cap.	0.1 25V Z				01

*** : New parts** **RANK : Japan only**

	REF NO.	PART NO.	DESCRIPTION		部品名	REMARKS	QTY	RANK
	C710	**FG613100**	Ceramic Capacitor-B	1000P 50V K				01
	CN703	**VI878600**	Cable Holder	51048 8P TE				01
	CN704	**VI878800**	Cable Holder	51048 10P TE				01
	CN705	**VI879000**	Cable Holder	51048 12P TE				01
	CN708	**VK025600**	Wire Trap	52147 12P TE				01
	CN710	**VI878000**	Cable Holder	51048 2P TE				01
	D701	**VD631600**	Diode	1SS133,176,HSS104				01
	-708	**VD631600**	Diode	1SS133,176,HSS104				01
	IC701	**XV226A00**	IC	KS0066U-10B				05
*	IC701	**XV974A00**	IC	SED1278F0A		LCD DRIVER		
	J701	**HF454680**	Carbon Resistor	68.0 1/4 J				01
*	LED01	**V3621200**	LED	SLZ-290B-10-T2 GR		DISK IN USE		
	R722	**VR346900**	Thermistor	ERTD2FGJ801S 800				03
	R723	**HF455220**	Carbon Resistor	220.0 1/4 J				01
	R724	**HF457910**	Carbon Resistor	91.0K 1/4 J				01
	RA702	**V0072900**	Resistor Array	EXB-Z6N222J				01
	W0703	**- -**	Connector Assembly	8P DM-PN1		(V388910)		
	W0704	**- -**	Connector Assembly	10P DM-PN1		(V388920)		
	W0705	**- -**	Connector Assembly	12P PN1-PN2		(V364770)		
	W0710	**- -**	Connector Assembly	2P DM-PN2		(V388940)		
		VV583800	Circuit Board	MK-L		(VV70110)		09
		VV437800	Diode	1N4148(DO-34)				01
		VK025600	Wire Trap	52147 12P TE				01
		VK025100	Wire Trap	52147 7P TE				01
		VV583900	Circuit Board	MK-H		(VV70120)		09
		VV437800	Diode	1N4148(DO-34)				01
		VK025600	Wire Trap	52147 12P TE				01
		VK024900	Wire Trap	52147 5P TE				01
		V2404900	Circuit Board	16M KBS		(XU878B0)		10
		- -	Vibration-proof Tape	10X64X0.5		(VK34680)		
		VA078900	Jumper Wire	0.55				
	C1	**FG651220**	Ceramic Capacitor-SL	22P 50V J				01
	C1	**VR027400**	Ceramic Capacitor-SL	22P 63V J				01
	C2	**FG651220**	Ceramic Capacitor-SL	22P 50V J				01
	C2	**VR027400**	Ceramic Capacitor-SL	22P 63V J				01
	C3	**UR828100**	Electrolytic Cap.	100.00 10.0V				01
	C4	**VD930900**	Semiconductive Cera. Cap.	0.1 25V M				01
	C4	**VM902400**	Carbon Resistor	0.1 25V Z				01
	CA1	**VP755200**	Ceramic Capacitor Array	100P 50V K				02
	CA2	**VT487100**	Ceramic Capacitor Array	470P X12				02
	CL1	**VN002100**	Ceramic Resonator	CST8.00MTW140				02
	CL1	**VQ305500**	Ceramic Resonator	8.00M EFOEC8004T3				02
	CN1	**VF728300**	Wire Trap	52147 6P TE				01
	CN2	**VK025600**	Wire Trap	52147 12P TE				01
	CN3	**VK025100**	Wire Trap	52147 7P TE				01
	CN4	**VK024900**	Wire trap	52147 5P TE				01
	IC1	**XR951A00**	IC	HD63B05V0F07P		CPU		06
	R1	**HF456470**	Carbon Resistor	4.7K 1/4 J				01
	R1	**VL631400**	Carbon Resistor	4.7K 1/6 J				01
	R2	**HF456470**	Carbon Resistor	4.7K 1/4 J				01
	R2	**VL631400**	Carbon Resistor	4.7K 1/6 J				01
	R3	**HF457470**	Carbon Resistor	47.0K 1/4 J				01
	R3	**VL632600**	Carbon Resistor	47.0K 1/6 J				01
	RA1	**VH373200**	Resistor Array	RGLE12X473J				01
*		**XV946A00**	Speaker	12.0cm 4ohm 6W				
*		**XV947A00**	Speaker	3.0cm				
		V3383300	LCD	TTR1817DPTDCN				
		V3384700	EL Light	NELTA3115G(A2)				
		VI663700	Terminal					
		VI865800	Spring Terminal					
⚠			AC Adaptor	PA-5CJ		J		
⚠ *			AC Adaptor	PA-51CH		O		
		V2043400	Floppy Disk Drive	D359M3				16
		V3075300	Floppy Disk Drive	MF355F-3252MGF				16

*** : New parts** **RANK : Japan only**

■ OVERALL CIRCUIT DIAGRAM 1/2 (DM, AM1/3, AM2/3 (VR), AM3/3 (SW), INV)（総回路図）

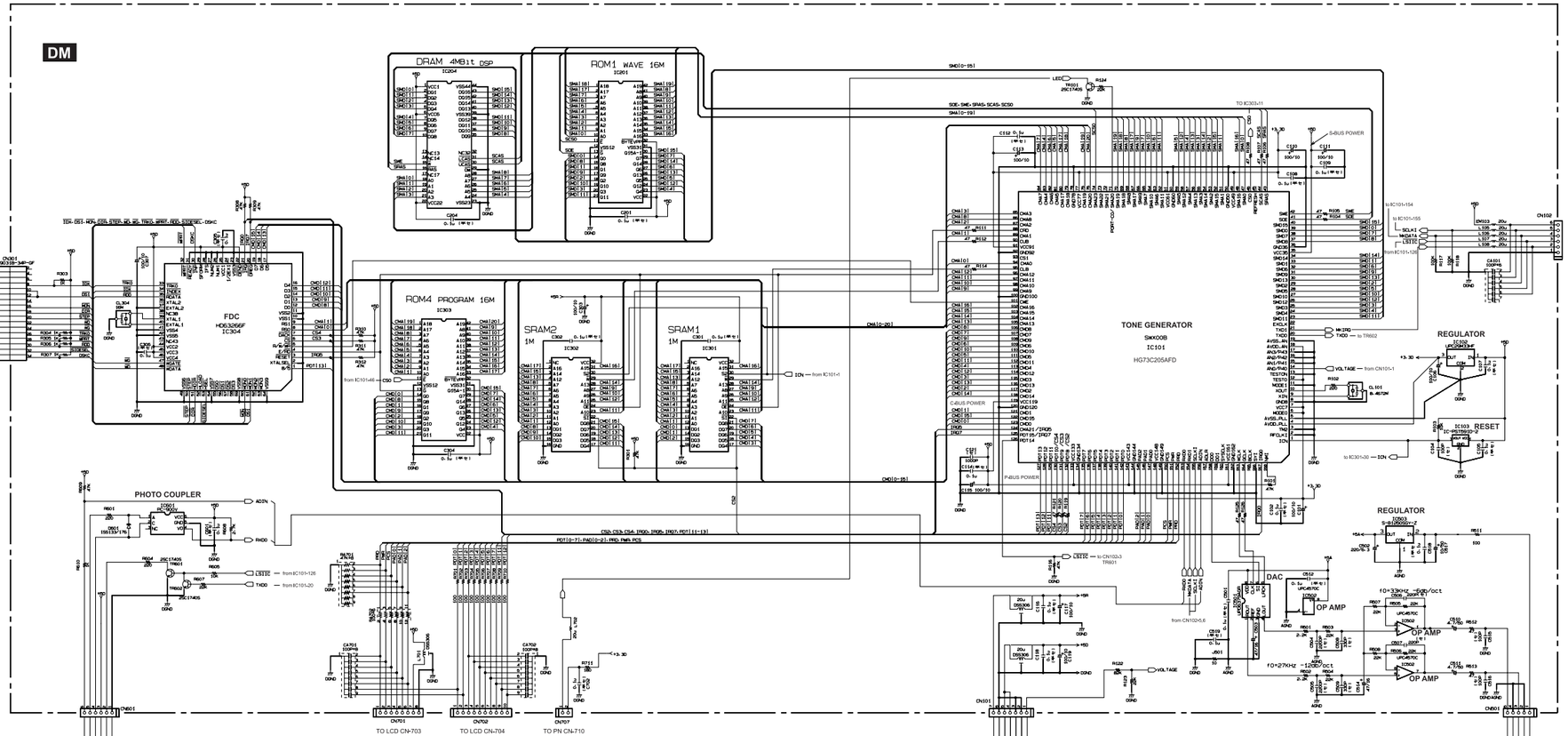

●S-81250SGY-Z(XT625A00)
REGULATOR +5V

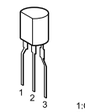

●PQ05RD11(XU814A00)
REGULATOR +5V

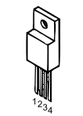

●μPC29M33HF(XT333A00)
REGULATOR +3.3V

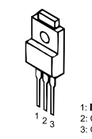

■ **WARNING**
Components having special characteristics are marked ⚠ and must be replaced with parts having specification equal to those originally installed.
⚠印の部品は、安全を維持する為に重要な部品です。交換をする場合は、安全の為必ず指定の部品をご使用ください。

Note: See parts list for details of circuit board component parts.
注：シートの部品詳細はパーツリストをご参照下さい 。

（マ） : Mylar Capacitor (マイラーコンデンサー)
（セ） : Ceramic Capacitor (セラミックコンデンサー)
（半セ）: Semiconductive Ceramic Capacitor
（半導体セラミックコンデンサー）
酸金 : Metal Oxide Film Resistor

DM : 28CC1-8813436 ⚠8
AM1/3 : 28CC1-8813436 ⚠8
AM2/3 (VR) :28CC1-8813436 ⚠8
AM3/3 (SW) :28CC1-8813436 ⚠8
INV : 28CC1-8813051 ⚠0

■ OVERALL CIRCUIT DIAGRAM 2/2 (PN, LCD, MKS3, MK-H, MK-L)（総回路図）

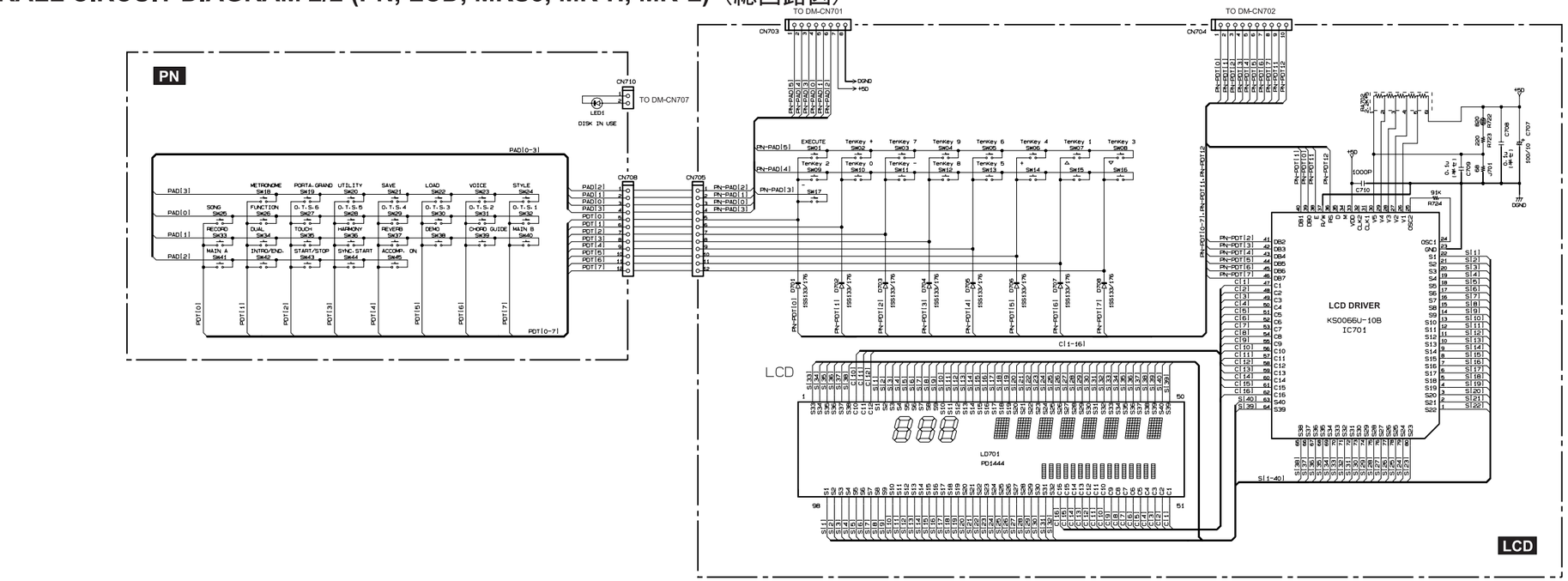

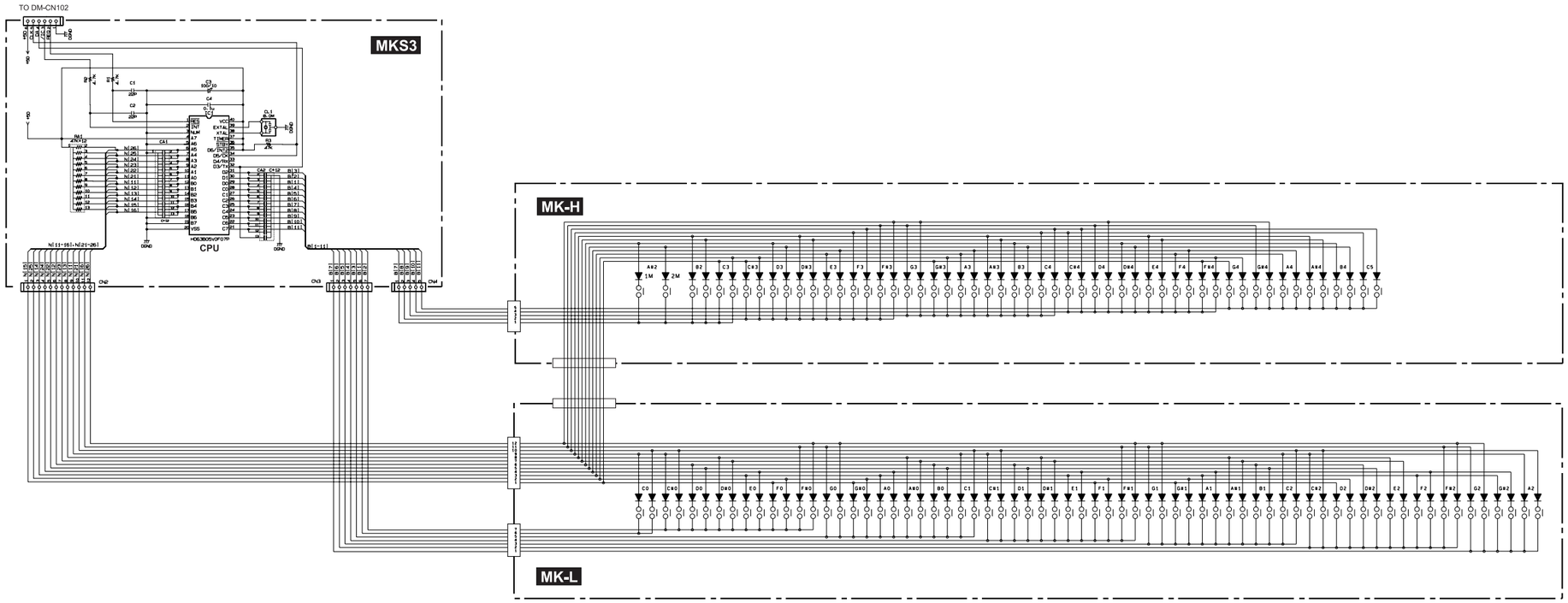

PN : 28CC1-8813437 ⚠1
LCD : 28CC1-8813437 ⚠1
MKS3 :28CC1-8812655
MK-L :28CC1-8811360
MK-H :28CC1-8811360

Note: See parts list for details of circuit board component parts.
注：シートの部品詳細はパーツリストをご参照下さい。