PORTATONE

PSR-270

SERVICE MANUAL



■CONTENTS

SPECIFICATIONS 3
PANEL LAYOUT 4
CIRCUIT BOARD LAYOUT 5
BLOCK DIAGRAM 6
DISASSEMBLY PROCEDURE 7
LSI PIN DESCRIPTION 12
IC BLOCK DIAGRAM 14
CIRCUIT BOARDS 15
TEST PROGRAM & INITIALIZE 17
PANEL VOICE LIST 19
GM VOICE LIST 20
STYLE LIST 21
MIDI IMPLEMENTATION CHART 22
PARTS LIST
PANEL SWITCH TABLE
OVERALL CIRCUIT DIAGRAM

PK 001617

YAMAHA

HAMAMATSU,JAPAN
1.95K-504 Ⓘ Printed in Japan'99.03

IMPORTANT NOTICE

This manual has been provided for the use of authorized Yamaha Retailers and their service personnel. It has been assumed that basic service procedures inherent to the industry, and more specifically Yamaha Products, are already known and understood by the users, and have therefore not been restated.

WARNING: Failure to follow appropriate service and safety procedures when servicing this product may result in personal injury, destruction of expensive components and failure of the product to per form as specified. For these reasons, we advise all Yamaha product owners that all service required should be performed by an authorized Yamaha Retailer or the appointed service repre sentative.

IMPORTANT: This presentation or sale of this manual to any individual or firm does not constitute authorization, certification, recognition of any applicable technical capabilities, or establish a principal-agent relationship of any form.

The data provided is believed to be accurate and applicable to the unit(s) indicated on the cover. The research engineering, and service departments of Yamaha are continually striving to improve Yamaha products. Modifications are, therefor, inevitable and changes in specification sre subject to change without notice or obligation to retrofit. Should any discrepancy appear to exist, please contact the distributor's Service Division.

WARNING: Static discharges can destroy expensive components. Discharge any static electricity your body may have accumulated by grounding yourself to the ground buss in the unit (heavy gauge black wires connect to this buss).

IMPORTANT: Turn the unit OFF during disassembly and parts replacement. Recheck all work before you apply power to the unit.

WARNING: CHEMICAL CONTENT NOTICE!

The solder used in the production of this product contains LEAD. In addition, other electrical / electronic and / or plastic (where applicable) components may also contain traces of chemicals found by the California Health and Welfare Agency (and possibly other entities) to cause cancer and / or birth defects or other reproductive harm.

DO NOT PLACE SOLDER, ELECTRICAL / ELECTRONIC OR PLASTIC COMPONENTS IN YOUR MOUTH FOR ANY REASON WHAT SO EVER!

Avoid prolonged, unprotected contact between solder and your skin! When soldering, do not inhale solder fumes or expose eyes to solder / flux vapor!

If you come in contact with solder or components located inside the enclosure of this product, wash your hands before handling food.

WARNING

Components having special characteristics are marked ⚠ and must be replaced with parts having specification equal to those originally installed.

SPECIFICATIONS

Keyboards
61 standard-size keys (C1 - C6), with Touch Response and Dynamic Filter.

Display
Large multi-function LCD display (backlit)

Setup
STANDBY/ON
MASTER VOLUME : MIN - MAX

Panel Controls
OVERALL (st, +, -), FUNCTION, SONG, VOICE, STYLE, PORTABLE GRAND, METRONOME, [0]-[9], [+](YES/FWD), [-](NO/BWD), DEMO, TOUCH

Demo Song
3 songs

Voice
100 panel voices + 10 Drum Kits + 128 GM Voices
Polyphony : 32
Voice Set
Dual Voice Mode
Split Voice Mode

Auto Accompaniment
100 styles
Accompaniment Control : ACMP ON/OFF, SYNC-START, START/STOP, INTRO/ENDING, MAIN A/B(AUTO FILL)
Beat Indicator
Fingering : Multi fingering
Accompaniment Volume

Yamaha Educational Suite
Chord Guide : Dictionary, Smart Chord, EZ Chord

One Touch Setting
Preset A and B (for each style)
User (4 Setups x 4 Banks)

Overall controls
Tempo
Transpose
Tuning
Accompaniment Volume
Song Volume
Metronome Volume

Effects
Reverb : 8 types
Chorus : 4 types
DSP : 33 types
Harmony : 26 types

Song
3 Preset Songs (Demo) + 3 User Songs
Song Clear

Recording
Song
User Song : 3 Songs
Real Time Recording/Step Recording
Recording Tracks : 1, 2, 3, 4, 5, 6/CHORD

EZ Chord
8 Banks + Bank Chain

OTS (One Touch Setting)
User : 4 Setups x 4 Banks

MIDI
Transmit Settings
Receive Settings
Local Control
Clock
Bulk Send/Receive
Initial Send

Auxiliary jacks
PHONES/OUTPUT, DC IN 10-12V, MIDI IN/OUT, FOOTSWITCH

Amplifier
3.0W + 3.0W

Speakers
12cm x 2

Power Consumption
15 W (when using PA-3B power adaptor)

Power Supply
Adaptor : Yamaha PA-3B AC power adaptor
Batteries : Six “D” size, SUM-1, R-20 or equivalent batteries

Dimensions (W x D x H)
933 x 370 x 129 mm (36-3/4" x 14-5/8" x 5-1/6")

Weight
5.7 kg (12.6 lbs.)

Supplied Accessories
Music Stand
Owner’s Manual

Optional Accessories

Headphones	: HPE-150
AC power adaptor	: PA-3B
Footswitch	: FC4, FC5
Keyboard stand	: L-2L, L-2C

* Specifications and descriptions are for information purposes only. Yamaha Corp. reserves the right to change or modify products or specifications at any time without prior notice.

PANEL LAYOUT

Control Panel

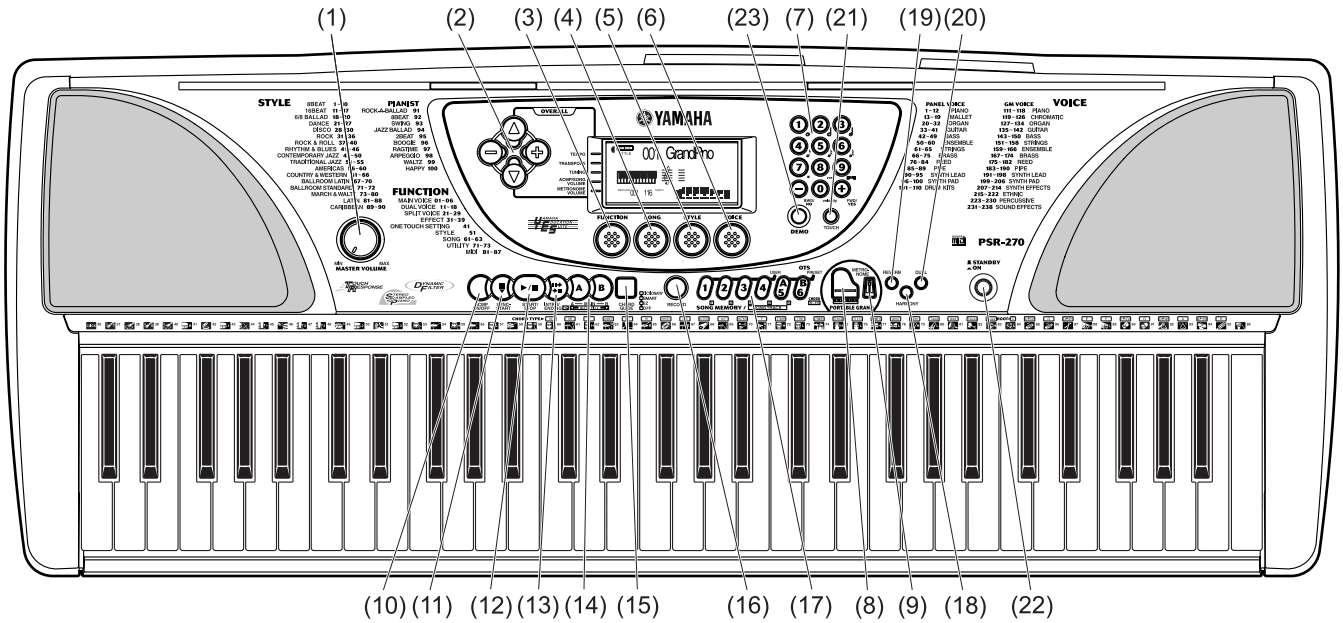

(1) MASTER VOLUME dial
(2) OVERALL buttons (s, t, +, -)
(3) FUNCTION button
(4) SONG button
(5) STYLE button
(6) VOICE button
(7) Numeric keypad, +/- buttons
(8) PORTABLE GRAND button
(9) METRONOME button
(10) ACMP ON/OFF button
(11) SYNC-START button
(12) START/STOP button
(13) INTRO/ENDING button
(14) MAIN A/B (AUTO FILL) buttons
(15) CHORD GUIDE button
(16) RECORD button
(17) ONE TOUCH SETTING / SONG MEMORY buttons
(18) HARMONY button
(19) REVERB button
(20) DUAL button
(21) TOUCH button
(22) Power switch (STANDBY/ON)
(23) DEMO button

Rear Panel

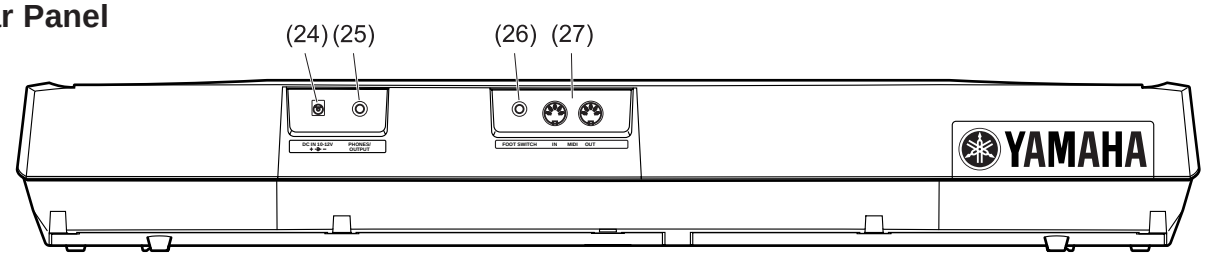

(24) DC IN 10-12V jack
(25) PHONES/OUTPUT jack
(26) FOOT SWITCH jack
(27) MIDI IN, OUT terminals

■ CIRCUIT BOARD LAYOUT & WIRING

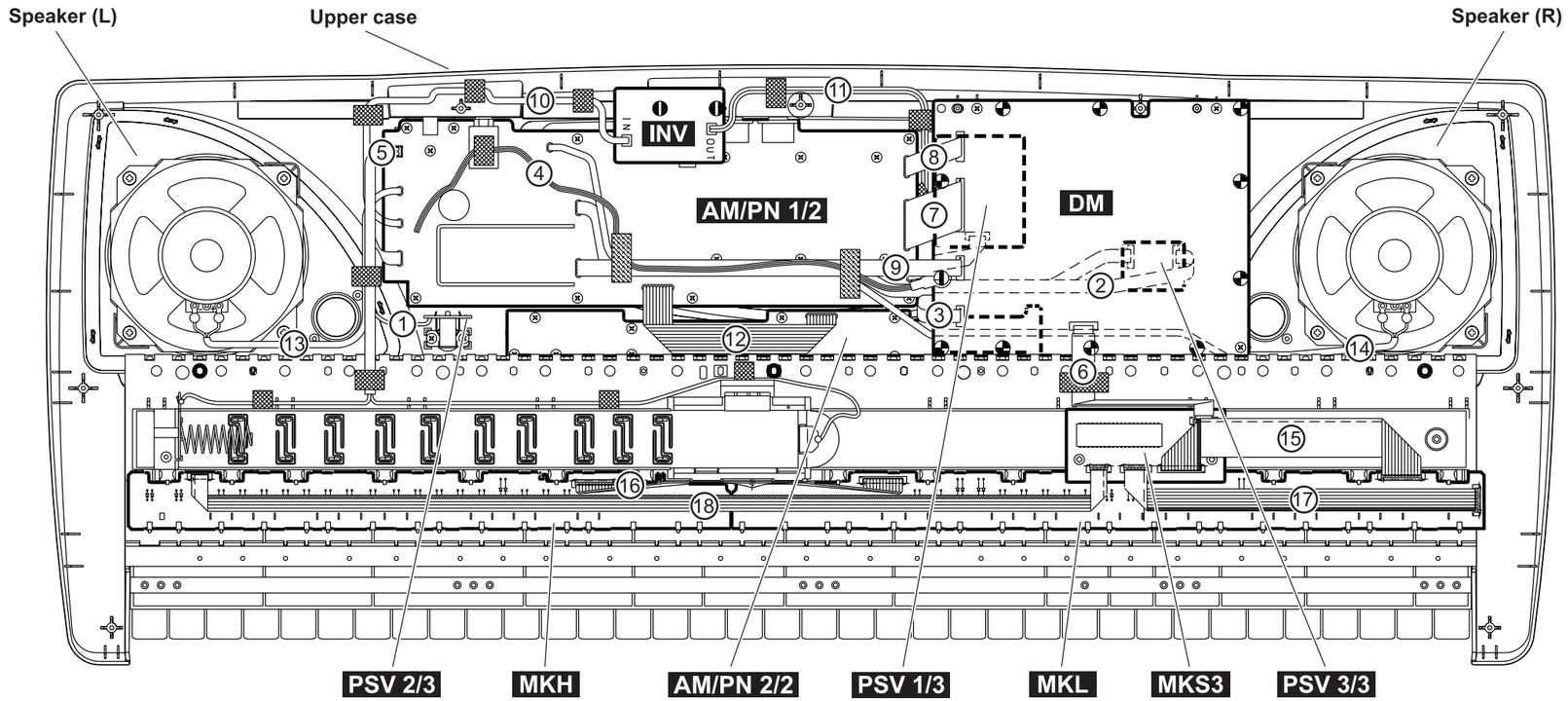

REF. NO.	DESTINATION		CONNECTOR ASSEMBLY	REMARKS	PART LIST Ref NO.	REF. NO.	DESTINATION		CONNECTOR ASSEMBLY	REMARKS	PART LIST Ref NO.
①	AM/PN-CN902	PVS-CN904	PSW	5P/L180	AM/PN-W0902	⑩	AM/PN-CN907	INV-CN906	INV	2P/420	AM/PN-W0904
②	AM/PN-CN801	PVS-CN804	AM-VR	4P/L440	AM/PN-W0801	⑪	INV-CN905	EL LIGHT	EL	2P/250	470
③	PVS-CN805	DM-CN501	DM-VR	4P/L270	PVS-W0805	⑫	AM/PN-CN701	AM/PN-CN702	AM/PN	9P/L160	AM/PN-W0704
④	AM/PN-GND	EARTH	GND	1P/380	AM/PN-W0903	⑬	AM/PN-CN802	SPEAKER (L)	SP-L	2P/230	AM/PN-W0803
⑤	AM/PN-CN903	BATTERY	BATT	2P/L380,510	450	⑭	AM/PN-CN803	SPEAKER (R)	SP-R	2P/600	AM/PN-W0802
⑥	MKS3-CN1	DM-CN102	DM-MKS	6P/220	440	⑮	MKS3-CN2	MK-L	160d	12P/190	160d
⑦	AM/PN-CN703	DM-CN702	PN-SW	16P/L120	AM/PN-W0703	⑯	MK-H	MK-L	MK-B	12P/215	160e
⑧	AM/PN-CN602	DM-CN601	MIDI	6P/L120	AM/PN-W0602	⑰	MKS3-CN3	MK-L	MK-C	7P/250	160f
⑨	AM/PN-CN901	DM-CN101	VDD	5P/L280	AM/PN-W0901	⑱	MKS3-CN4	MK-H	MK-D	5P/L615	160g

■ BLOCK DIAGRAM

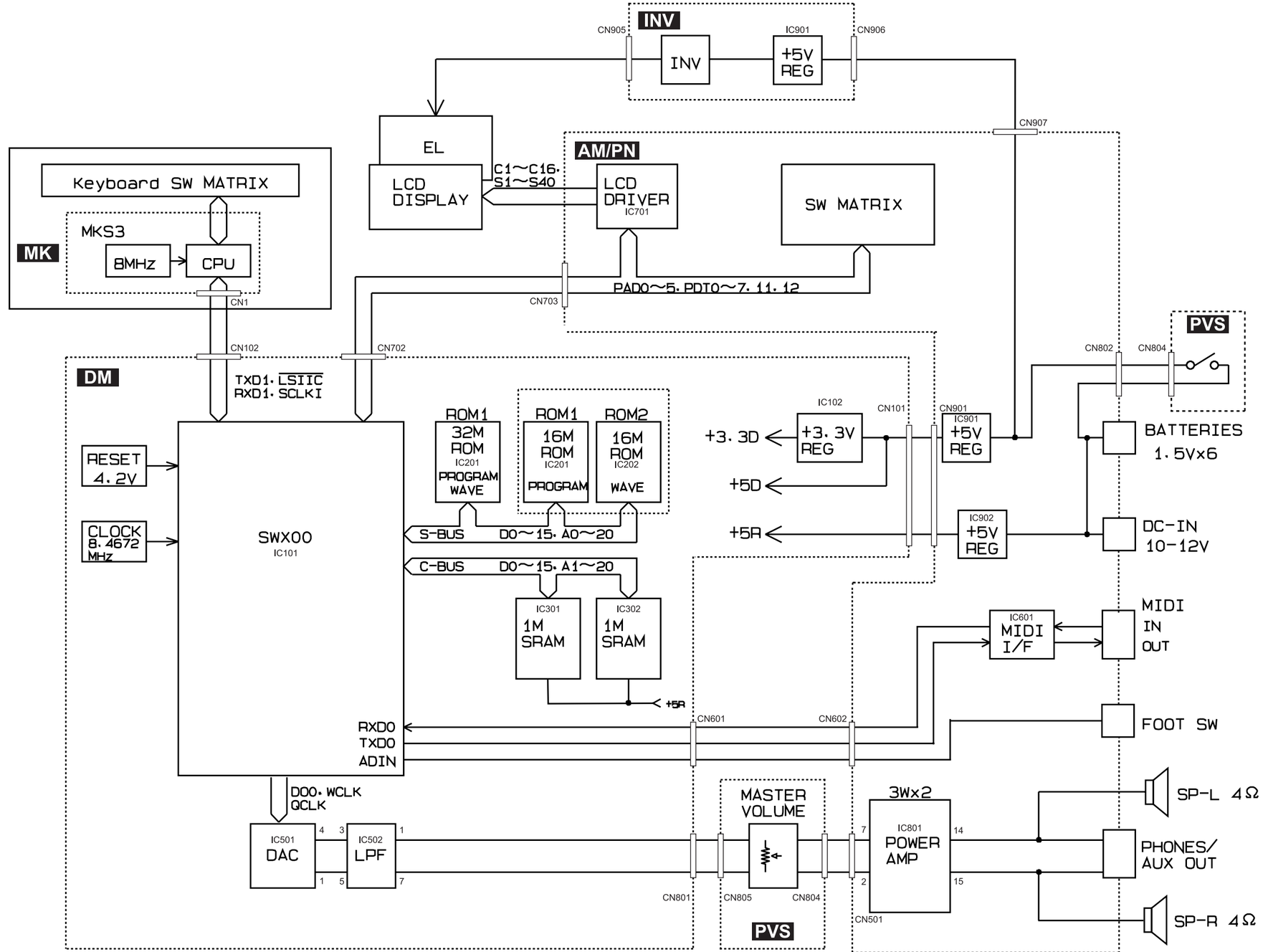

28CA1-8813220

DISASSEMBLY PROCEDURE

1 Lower Case Assembly

1-1 Remove the battery cover assembly. (Fig. 1)

1-2 Remove the fourteen (14) screws marked [330] and the two (2) screws marked [340]. The lower case assembly can then be removed.

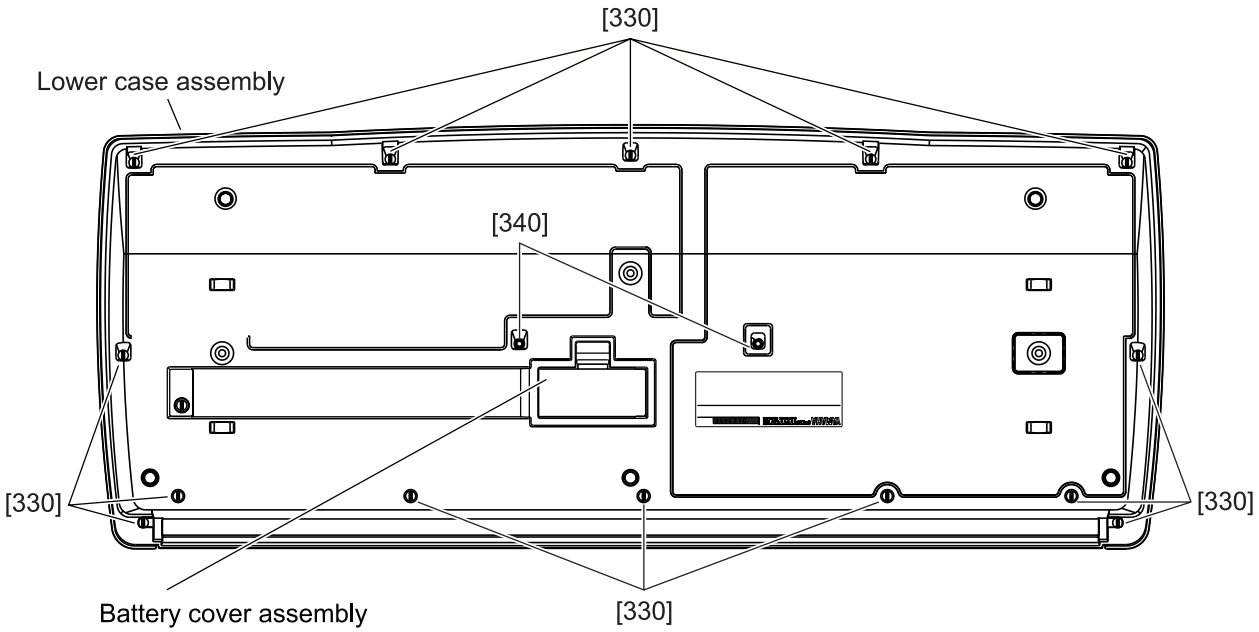

[330]: Bind Head Tapping Screw-P 3.0X12 MFZN2Y (EP600300)
[340]: Bind Head Tapping Screw-P 3.0X25 MFZN2Y (VK228100)

(Fig.1)

2 DM Circuit Board

2-1 Remove the lower case assembly. (See Procedure 1.)

2-2 Remove the four (4) screws marked [330]. The DM circuit board with the shield box can then be removed. (Fig. 2)

2-3 Remove the ten (10) screws marked [310]. The DM circuit board can then be removed. (Fig. 2)

3 INV Circuit Board

3-1 Remove the lower case assembly. (See Procedure 1.)

3-3 Remove the two (2) screws marked [320]. The INV circuit board can then be removed. (Fig. 2)

4 Keyboard Assembly

4-1 Remove the lower case assembly. (See Procedure 1.)

4-2 Remove the three (3) screws marked [340]. The keyboard assembly can then be removed. (Fig. 2)

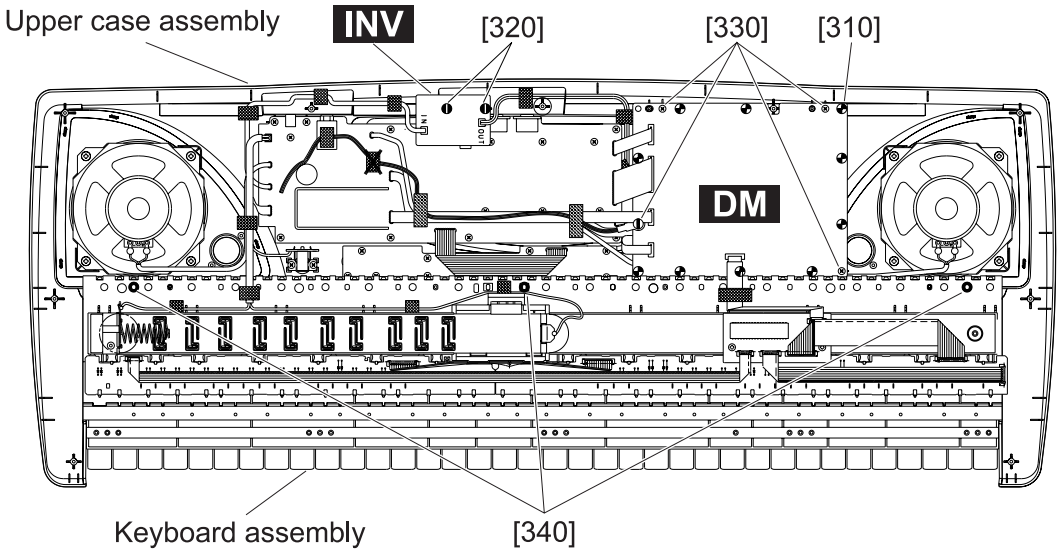

[310]: Bind Head Tapping Screw-P 3.0X8 MFZN2Y (EP600250)
[330]: Bind Head Tapping Screw-P 3.0X12 MFZN2Y (EP600300)
[340]: Bind Head Tapping Screw-P 3.0X25 MFZN2Y (VK228100)

(Fig. 2)

5 PSV 3/3 Circuit Board

5-1 Remove the MASTER VOLUME knob on the control panel. (See Fig. 3.)
5-2 Remove the lower case assembly. (See Procedure 1.)
5-3 Remove the DM circuit board with the shield box. (See Procedure 2.)
5-4 Remove the three (3) screws marked [320A]. The PVS 3/3 circuit board can then be removed. (Fig. 4)

6 PVS 2/3 Circuit Board

6-1 Remove the lower case assembly. (See procedure 1.)
6-2 Remove the two (2) screws marked [320B]. The PSV 2/3 circuit board with the knob can then be removed. (Fig. 4)
6-3 Pull the knob off the PSV 2/3 circuit board.

7 PVS 1/3 Circuit Board

7-1 Remove the lower case assembly. (See Procedure 1.)
7-2 Remove the DM circuit board with the shield box. (See Procedure 2.)
7-3 Remove the four (4) screws marked [320C]. The PSV 1/3 circuit board can then be removed. (Fig. 4)

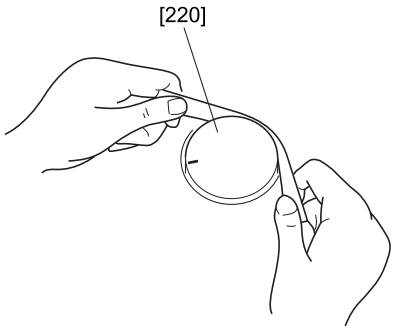

(Fig.3)

8 AMPN 1/2 Circuit Board

8-1 Remove the lower case assembly. (See Procedure 1.)
8-2 Remove the INV circuit board. (See Procedure 3.)
8-3 Remove the PSV 2/3 circuit board. (See Procedure 6.)
8-4 Remove the fifteen (15) screws marked [320D]. The AMPN 1/2 circuit board can then be removed. (Fig. 4)

9 AMPN 2/2 Circuit Board

9-1 Remove the lower case assembly. (See Procedure 1.)
9-2 Remove the DM circuit board with the shield box. (See Procedure 2.)
9-3 Remove the eleven (11) screws marked [320E] . The AMPN 2/2 circuit board can then be removed. (Fig. 4)

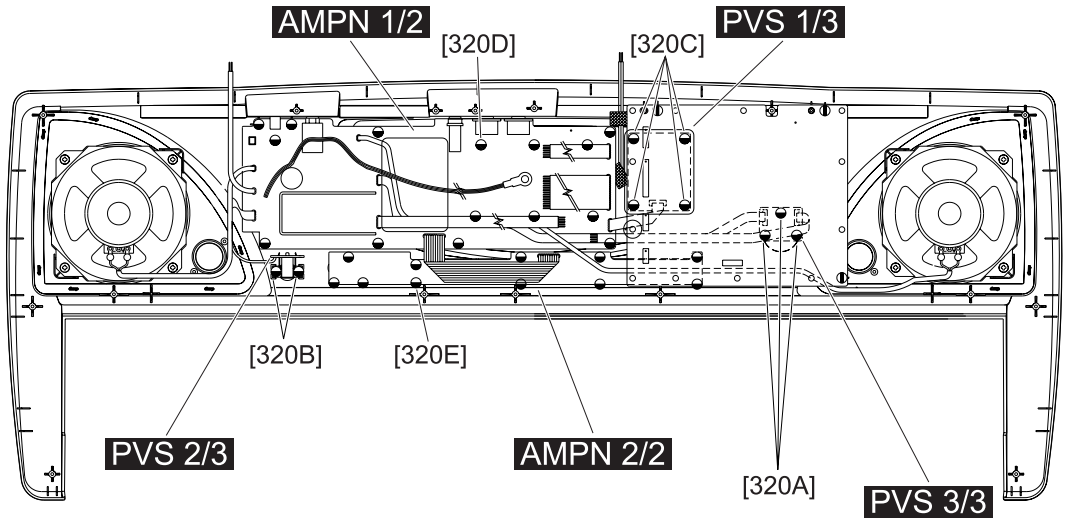

[320]: Bind Head Tapping Screw-P 3.0X8 MFZN2Y (EP600280)
[330]: Bind Head Tapping Screw-P 4.0X8 MFZN2BL (VB931600)

(Fig.4)

10 LCD

10-1 Remove the lower case assembly. (See Procedure 1.)

10-2 Remove the INV circuit board. (See Procedure 3.)

10-3 Remove the PSV 2/3 circuit board. (See Procedure 6.)

10-4 Remove the EL light.

* When replacing the EL light, solder the wires to the EL light leads within 3 seconds a wire, keeping the leads more than 3 mm.
* Do not bend the EL light.

10-5 Remove the AMPN 1/2 circuit board. (See Procedure 8.)

10-6 Remove the two rubber contacts. Be careful not to touch the conductive surface. The LCD can then be removed. (Fig. 5)

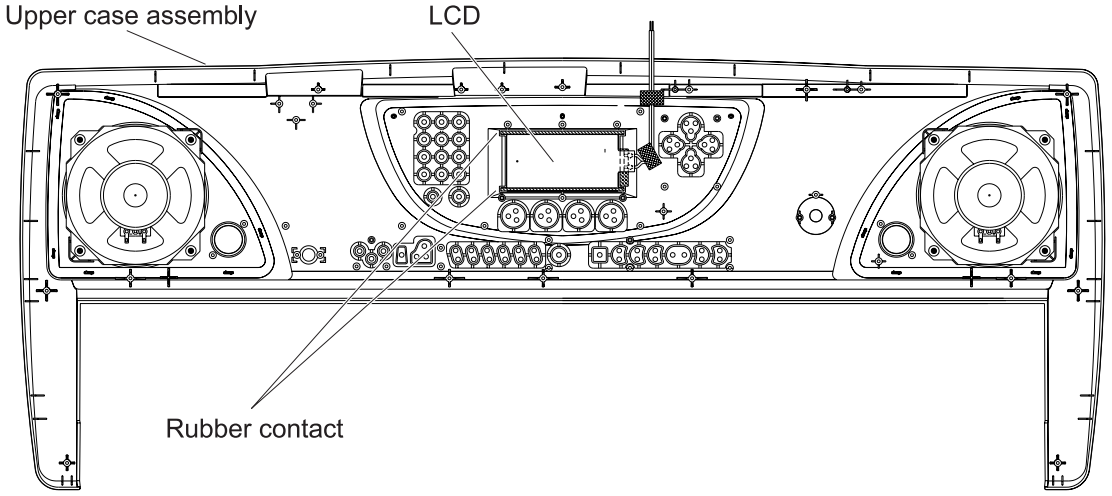

(Fig.5)

11 Speakers

11-1 Remove the lower case assembly. (See Procedure 1.)

11-2 Remove the eight (8) screws marked [350]. The right and left speakers can then be removed. (Fig. 6)

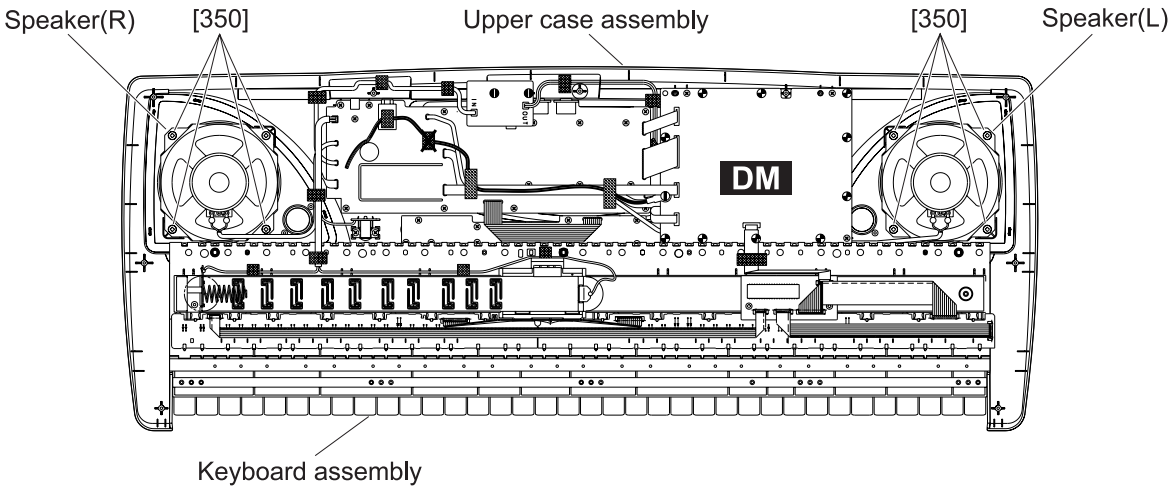

[350]: Bind Head Tapping Screw-P 4.0X8 MFZN2BL (VB931600)

(Fig. 6)

12 Disassembling the keyboard assembly

12-1 Remove the keyboard assembly. (See Procedure 1.)

12-2 Remove the two (2) screws marked [30]. The MKS3 circuit board can then be removed. (Fig. 7)

12-3 Remove the MK circuit board while pressing the fifteen (15) hooks (A) inward, and then remove the rubber contact. (Fig. 8)

12-4 Remove the twenty-one (21) screws marked [140].

12-5 Remove the black keys from the lower notes. Afterwards, remove the white keys DFA and C', then remove the white keys CEGB from the higher notes. At this time, lift the keys from the front and slide them towards you. The keys can then be removed from the assembly. (Fig. 9)

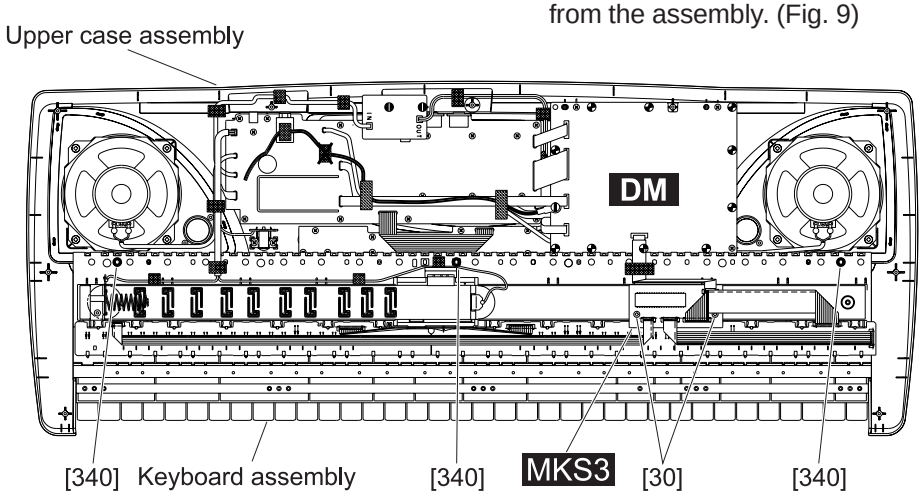

[30]: Bind Head Tapping Screw-P 3.0X8 MFZN2Y (EP600280)
[340]: Bind Head Tapping Screw-P 3.0X25 MFZN2Y (VK228100)

(Fig. 7)

13 Assembling the keyboard assembly

13-1 Install the white keys CEGB from the lower notes, and then install the DFA keys and the C' key. Afterwards install the black keys from the higher notes, and tighten the twenty-one (21) screws marked [140]. (Fig. 9)

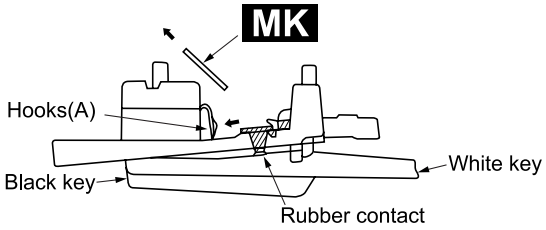

(Fig. 8)

13-2 Install the rubber contacts in the assembly while pressing the keys as shown in Figure 10. Check that the rubber contact has been firmly placed into position in the area indicated by the arrow in Figure 11. (Fig. 10, 11 and 12)

* When fitting the rubber contacts, raise both ends of the frame so that the keys do not push the rubber contact up.

13-3 Install the MK circuit board in the assembly so that the hooks (B) are holding it as shown in Figure 11.

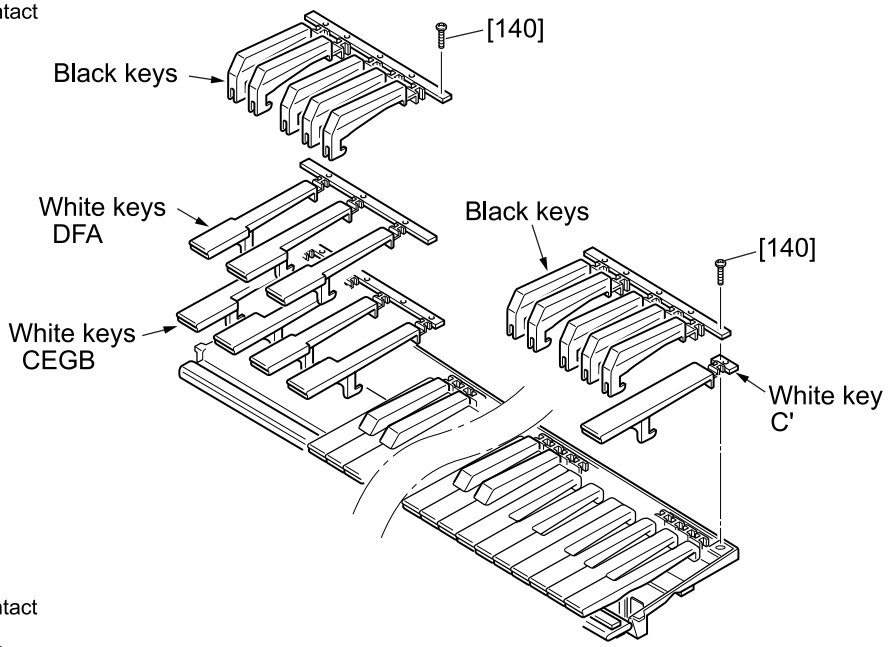

[140]: Bind Head Tapping Screw-P 3.0X16 MFZN2BL (VB205200)
[140]: Bind Head Tapping Screw-P 3.0X16 MFZN2B (VS756700)
[140]: Bind Head Tapping Screw-P 3.0X16 MFZN2B (EP600310)

(Fig. 9)

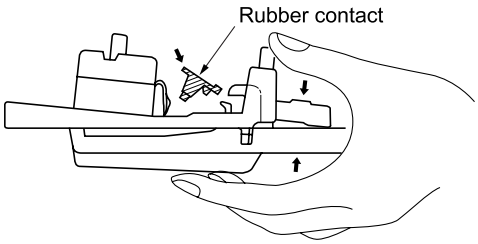

(Fig. 10)

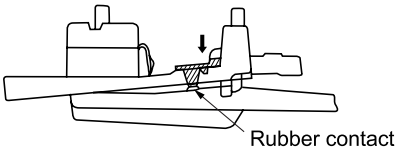

(Fig. 11)

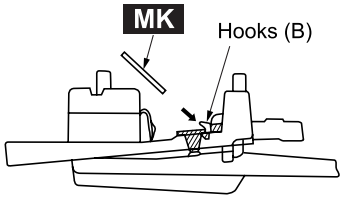

(Fig. 12)

■ LSI PIN DESCRIPTION

KS0076BQ-00 (XR793A00) **LCD DRIVER**

KS0066U-10B (XV226A00) **LCD DRIVER**

PIN NO.	NAME	I/O	FUNCTION	PIN NO.	NAME	I/O	FUNCTION
1	S22	O		41	DB2	I/O	
2	S21	O		42	DB3	I/O	
3	S20	O		43	DB4	I/O	Data interface
4	S19	O		44	DB5	I/O	
5	S18	O		45	DB6	I/O	
6	S17	O		46	DB7	I/O	
7	S16	O		47	C1	O	
8	S15	O		48	C2	O	
9	S14	O		49	C3	O	
10	S13	O		50	C4	O	
11	S12	O	Segment signal output for LCD	51	C5	O	
12	S11	O	driving	52	C6	O	
13	S10	O		53	C7	O	
14	S9	O		54	C8	O	Common signal output for LCD
15	S8	O		55	C9	O	driving
16	S7	O		56	C10	O	
17	S6	O		57	C11	O	
18	S5	O		58	C12	O	
19	S4	O		59	C13	O	
20	S3	O		60	C14	O	
21	S2	O		61	C15	O	
22	S1	O		62	C16	O	
23	Vss		Ground	63	S40	O	
24	OSC1	I	Oscillator	64	S39	O	
25	OSC2	O	Oscillator	65	S38	O	
26	V1			66	S37	O	
27	V2			67	S36	O	
28	V3		Power supply	68	S35	O	
29	V4			69	S34	O	
30	V5			70	S33	O	
31	CLK1	O	Data latch clock	71	S32	O	Segment signal output for LCD
32	CLK2	O	Data shift clock	72	S31	O	driving
33	Vdd		Power supply (+5 V)	73	S30	O	
34	M	O	Altamated signal for LCD driver outout	74	S29	O	
35	D	O	Display data interface	75	S28	O	
36	RS	I		76	S27	O	
37	R/W	I	Read/write	77	S26	O	
38	E	I	Enable	78	S25	O	
39	DB0	I/O	Data interface	79	S24	O	
40	DB1	I/O	Data interface	80	S23	O	

HD63B05V0F07P (XR951A00) **CPU**

PIN NO.	NAME	I/O	FUNCTION	PIN NO.	NAME	I/O	FUNCTION
1	/RES	I	Reset	21	C7	I/O	
2	/INT	I	Interrupt request	22	C6	I/O	
3	NUM	I	Non-maskable interrupt	23	C5	I/O	
4	A7	I/O		24	C4	I/O	Port C
5	A6	I/O		25	C3	I/O	
6	A5	I/O		26	C2	I/O	
7	A4	I/O	Port A	27	C1	I/O	
8	A3	I/O		28	C0	I/O	
9	A2	I/O		29	D0	I/O	
10	A1	I/O		30	D1	I/O	Port D
11	A0	I/O		31	D2	I/O	
12	B0	I/O		32	D3/TX	O	(Serial data output)
13	B1	I/O		33	D4/RX	I	(Serial data input)
14	B2	I/O		34	D5//CK	O	(Clock for serial operation)
15	B3	I/O	Port B	35	D6//INT2	I	(Interrupt request 2)
16	B4	I/O		36	/STBY	I	(Standby mode signal)
17	B5	I/O		37	TIMER	I	Timer
18	B6	I/O		38	XTAL	O	Clock
19	B7	I/O		39	EXTAL	I	
20	VSS		Ground	40	VCC		Power supply

● HG73C201FD (XT890A00) SWX00 TONE GENERATOR

PIN NO.	NAME	I/O	FUNCTION	PIN NO.	NAME	I/O	FUNCTION
1	ICN	I	Initial clear	85	CMA3	O	Program address bus
2	RFCLKI	I	PLL Clock	86	CMA8	O	Program address bus
3	TM2	I	PLL Control	87	CMA2	O	Program address bus
4	AVDD_PLL		Power supply	88	CRD	O	read signal
5	AVSS_PLL		Ground	89	CMA1	O	Program address bus
6	MODE0	I	SWX dual mode	90	CUB	O	high byte effective signal
7	VCC7		Power supply	91	VCC91		Power supply
8	GND8		Ground	92	GHND92		Ground
9	XIN	I	crystal oscillator	93	CS1	O	CS signal
10	XOUT	O	crystal oscillator	94	CMA0	O	Program address bus
11	MODE1	I	SWX separate mode	95	CLB	O	low byte effective signal
12	TEST0	I	TEST pin	96	CMA12	O	Program address bus
13	TESTON	I	TEST pin	97	CMA11	O	Program address bus
14	AN0-P40	I	A/D converter	98	CMA10	O	Program address bus
15	AN1-P41	I	A/D converter	99	CMA9	O	Program address bus
16	AN2-P42	I	A/D converter	100	GND100		Ground
17	AN3-P43	I	A/D converter	101	CWE	O	write signal
18	AVDD_AN		Power supply	102	CMA16	O	Program address bus
19	AVSS_AN		Ground	103	CMA15	O	Program address bus
20	TXD0	O	for MIDI or TO-HOST	104	CMA14	O	Program address bus
21	TXD1	O	for MIDI	105	CMA13	O	Program address bus
22	EXCLK	I	Crystal oscillator	106	CMD8	I/O	Program memory Data bus
23	SMD11	I/O	Wave memory data bus	107	CMD7	I/O	Program memory Data bus
24	SMD4	I/O	Wave memory data bus	108	CMD9	I/O	Program memory Data bus
25	SMD3	I/O	Wave memory data bus	109	CMD6	I/O	Program memory Data bus
26	SMD12	I/O	Wave memory data bus	110	CMD10	I/O	Program memory Data bus
27	SMD10	I/O	Wave memory data bus	111	CMD5	I/O	Program memory Data bus
28	SMD5	I/O	Wave memory data bus	112	CMD11	I/O	Program memory Data bus
29	SMD2	I/O	Wave memory data bus	113	CMD4	I/O	Program memory Data bus
30	SMD13	I/O	Wave memory data bus	114	CMD12	I/O	Program memory Data bus
31	SMD9	I/O	Wave memory data bus	115	CMD3	I/O	Program memory Data bus
32	SMD6	I/O	Wave memory data bus	116	CMD13	I/O	Program memory Data bus
33	SMD1	I/O	Wave memory data bus	117	CMD2	I/O	Program memory Data bus
34	SMD14	I/O	Wave memory data bus	118	CMD14	I/O	Program memory Data bus
35	VCC35		Power supply	119	VCC119		Power supply
36	GND36		Ground	120	GND115		Ground
37	SMD8	I/O	Wave memory data bus	121	CMD1	I/O	Program memory Data bus
38	SMD7	I/O	Wave memory data bus	122	CMD15	I/O	Program memory Data bus
39	SMD0	I/O	Wave memory data bus	123	CMD0	I/O	Program memory Data bus
40	SMD15	I/O	Wave memory data bus	124	CMA21	O	Program address bus
41	SOE	O	read signal	125	PDT15	I/O	SWX access data bus
42	SWE	O	write signal	126	PDT14	I/O	SWX access data bus
43	SRAS	O	RAS signal	127	PDT13	I/O	SWX access data bus
44	SCAS	O	CAS signal	128	PDT12	I/O	SWX access data bus
45	REFRESH	O	REFRESH signal	129	PDT11	I/O	SWX access data bus
46	CS0	O	CS signal	130	PDT10	I/O	SWX access data bus
47	SMA0	O	Memory address bus	131	PDT9	I/O	SWX access data bus
48	SMA16	O	Memory address bus	132	PDT8	I/O	SWX access data bus
49	VCC49		Power supply	133	VCC133		Power supply
50	GND50		Ground	134	GND134		Ground
51	SMA1	O	Memory address bus	135	PDT7	I/O	SWX access data bus
52	SMA15	O	Memory address bus	136	PDT6	I/O	SWX access data bus
53	SMA2	O	Memory address bus	137	PDT5	I/O	SWX access data bus
54	SMA14	O	Memory address bus	138	PDT4	I/O	SWX access data bus
55	SMA3	O	Memory address bus	139	PDT3	I/O	SWX access data bus
56	SMA13	O	Memory address bus	140	PDT2	I/O	SWX access data bus
57	SMA4	O	Memory address bus	141	PDT1	I/O	SWX access data bus
58	SMA12	O	Memory address bus	142	PDT0	I/O	SWX access data bus
59	SMA5	O	Memory address bus	143	VCC143		Power supply
60	GND60		Ground	144	GND144		Ground
61	VCC61		Power supply	145	PAD2	I	SWX access address bus
62	SMA11	O	Memory address bus	146	PAD1	I	SWX access address bus
63	SMA6	O	Memory address bus	147	PAD0	I	SWX access address bus
64	SMA10	O	Memory address bus	148	VCC148		Power supply
65	SMA7	O	Memory address bus	149	GND149		Ground
66	SMA9	O	Memory address bus	150	PCS	I	Chip select
67	SMA17	O	Memory address bus	151	PWR	I	write enable
68	SMA8	O	Memory address bus	152	PRD	I	read enable
69	SMA18	O	Memory address bus	153	RXD0	I	for Midi or TO-HOST
70	SMA19	O	Memory address bus	154	RXD1	I	for Midi or Key scan
71	SMA20	O	Memory address bus	155	SCLKI	I	EXT Clock
72	SMA21	O	Memory address bus	156	ADIN	I	A/D converter
73	SMA22	O	Memory address bus	157	ADLR	O	A/D converter LR clock
74	SMA23	O	Memory address bus	158	DO0	O	DAC
75	CMA20	O	Program address bus	159	DO1	O	DAC
76	CMA19	O	Program address bus	160	SYSCLK	O	1/2 clock
77	VCC77		Power supply	161	VCC161		Power supply
78	GND78	O	Ground	162	GND162		Ground
79	CMA18	O	Program address bus	163	WCLK	O	for DAC LR clock
80	CMA17	O	Program address bus	164	QCLK	O	1/12 clock
81	CMA5	O	Program address bus	165	BCLK	O	IIS-DAC clock
82	CMA6	O	Program address bus	166	SYI	I	Synch signal
83	CMA4	O	Program address bus	167	IRQ0	I	Interrupt request
84	CMA7	O	Program address bus	168	NMI	I	Interrupt request

■ IC BLOCK DIAGRAM

- **μ PC4570C (XC520A00)**
  Dual Operational Amplifier

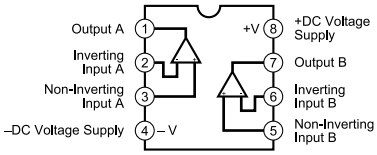

- **μ PD6379A (XR998A0)**
  D/A Converter

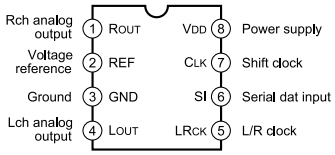

■ CIRCUIT BOARDS

- **DM Circuit Board**

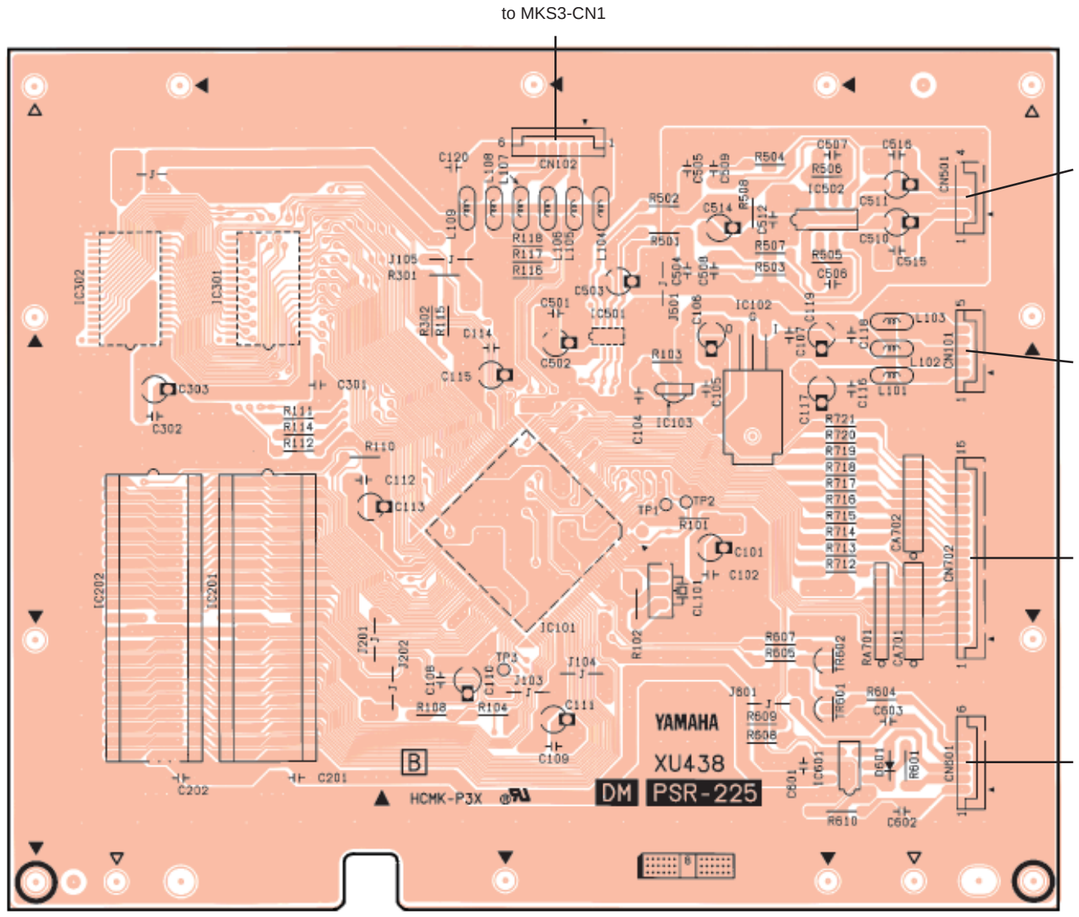

Component side

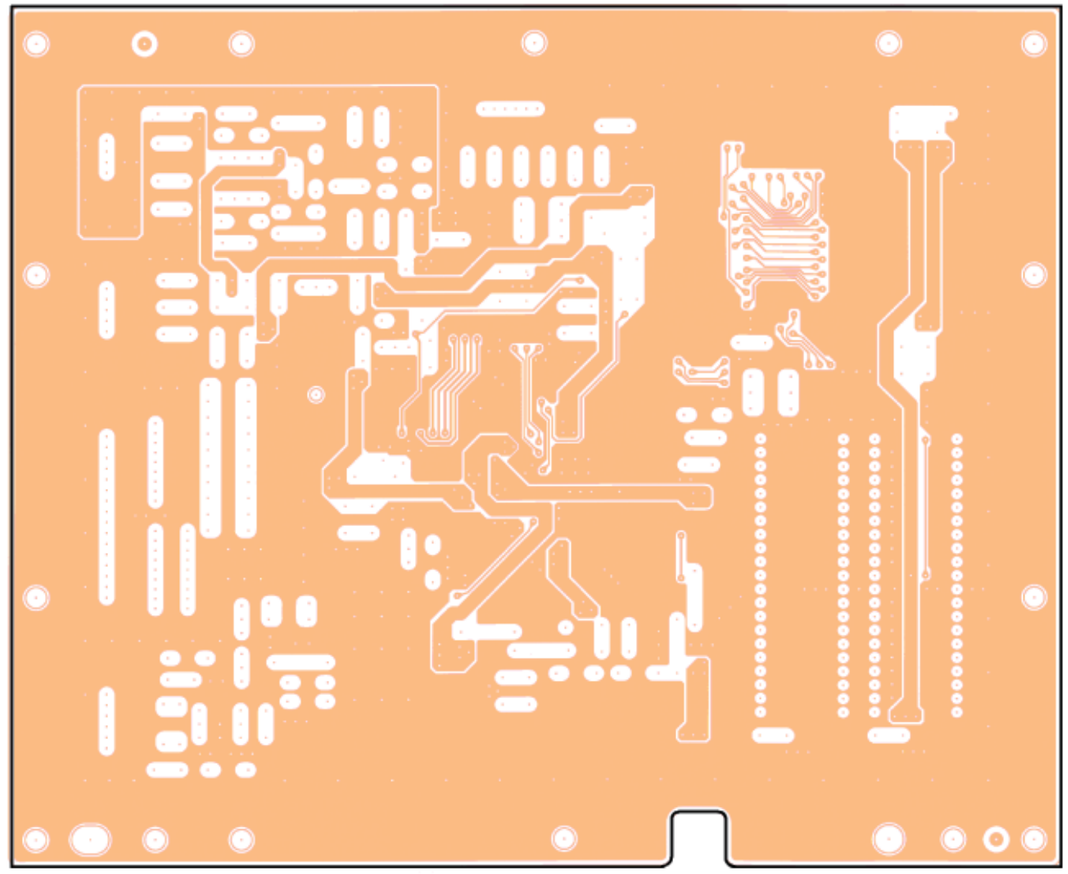

Patternside

- **MKS3 Circuit Board**

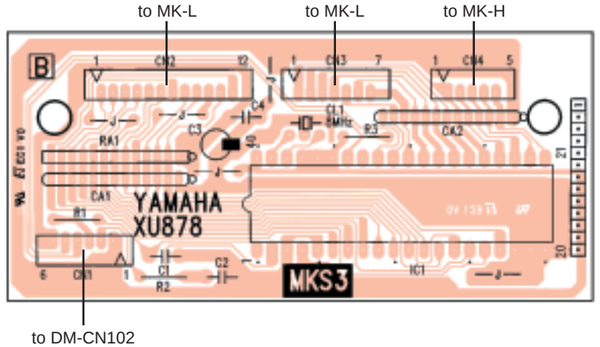

DM:2NA-V338490

Note: See parts list for details of circuit board component parts.

- **AM/PN 2/2 Circuit Board**

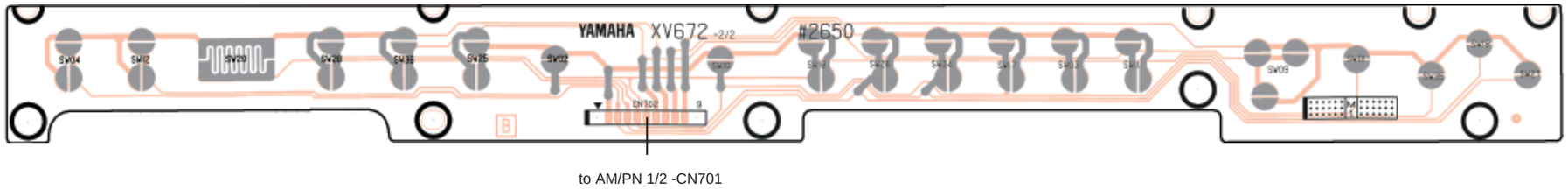

- **AM/PN 1/2 Circuit Board**

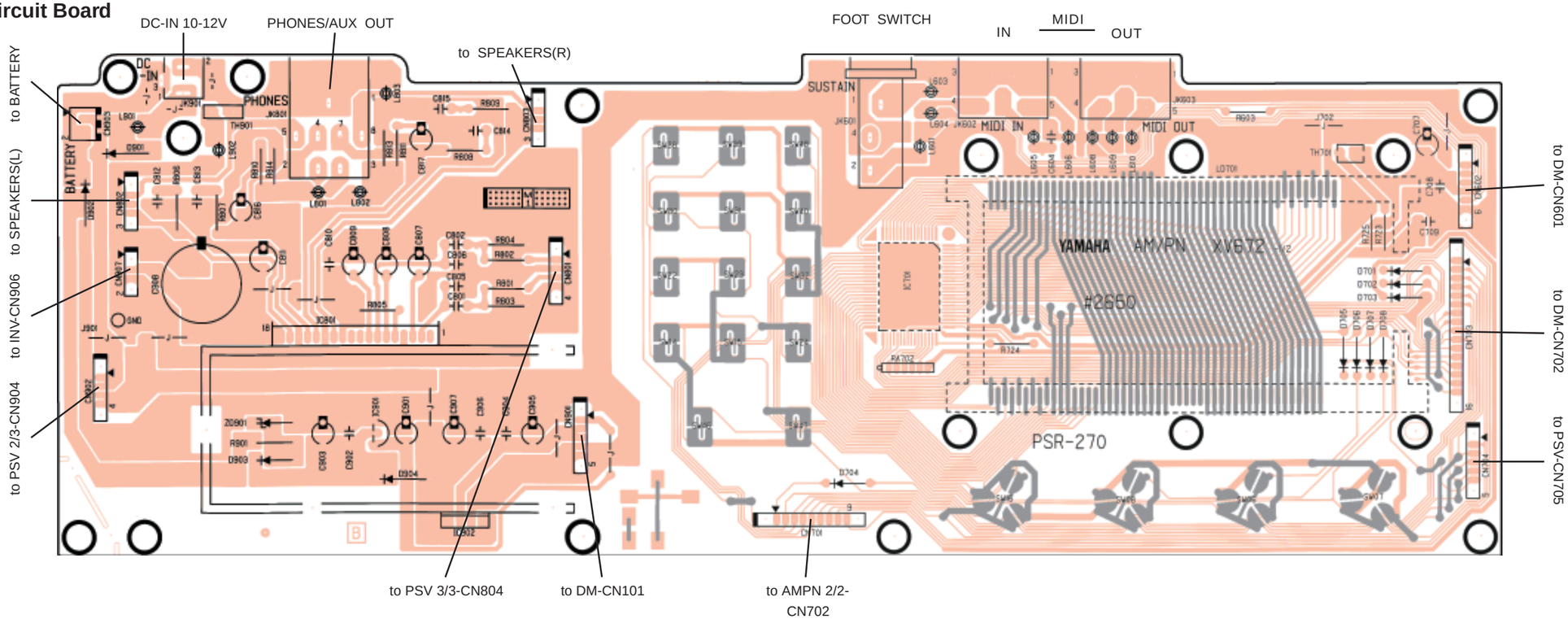

- **PSV 1/3 Circuit Board**

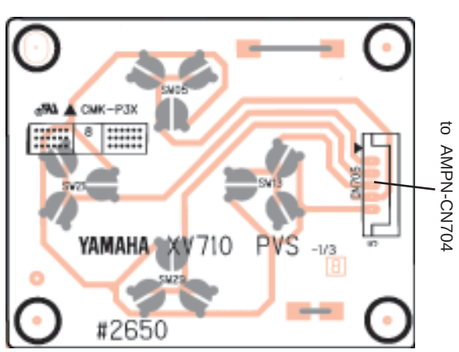

- **PSV 3/3 Circuit Board**

MASTER VOLUME

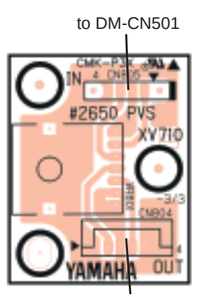

- **PSV 2/3 Circuit Board**

STAND BY/ON

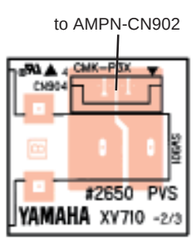

- **INV Circuit Board**

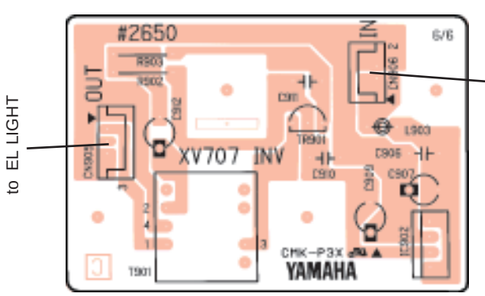

AMPN: 2NA-V206360
PSV : 2NA-V348100
INV : 2NA-V348100 0

Note: See parts list for details of circuit board component parts.
See PANEL SWITCH TABLE refer to parts list P9.

■ TEST PROGRAM & INITIALIZE

1. TEST PROGRAM

A. PREPARATION

1) PA-3B (AC adaptor) is used when there is no specification. (PA-32,PA-3 are utilizable)
2) The volume is usually moved to the use position when no volume change is required.
3) Measuing instruments:
   Frequency counter
   Level meter (with a JIS-C filter)
   Note: Use a stereo plug and connect the 33Ω load at [PHONES/AUX OUT] jack.
4) Jigs:
   Foot switch, MIDI cable

B. HOW TO ENTER THE TEST PROGRAM

While pressing the C2# ,F2 and G2# keys, turn on the [STAND BY/ON] switch on.

C. PROCEEDING THROUGH THE TEST PROGRAM

The LCD will display “TEST” when entering the test program.
To select the program number, use the [OVERALL +/-] button.
To execute the test, press the [START/STOP] button.
To proceed to the next test, press the [START/STOP] button again.

D. TEST PROGRAM LIST

TEST NO.	LCD (initial)	Test Functions and Judgment Criteria
1	001:Version	Displays Rom version ROM(Program, Wave) versions are displayed alternately on the LCD.
2	002:Rom Chk1	Checks the ROM. The test result appears on the LCD.
3	003:Ram Chk1	Checks all the RAMs which are connected to the CPU. The test result appears on the LCD.
11	011:TG1 Chk	Outputs the sine wave by changing the channels in sequence from C2 to G4. After autoscaling is finished, individual keys can be played. (If playing two or more keys simulaneously, the final depressed key has priority to make a sound.)
13	013:Pit Chk	Connect the frequency counter to the [PHONE/AUX OUT] jack. Check that the 440 Hz +/- 1.76 Hz signal is output.
14	014:Output R	Connect the level meter (with a JIS-C filter) to the [PHONS/AUX OUT] jack. (33Ω load) Set the [MASTER VOLUME] at maximum. Check the output level (1kHz). Phones L: Less than -50dBm Phones R: -6.0dBm +/- 2dB
15	015:Output L	Connect the level meter (with a JIS-C filter) to the [PHONS/AUX OUT] jack. (33Ω load) Set the [MASTER VOLUME] at maximum. Check the output level (1kHz). Phones L: -6.0dBm +/- 2dB Phones R: Less than -50dBm
19	019:Noise	Connect the level meter (with a JIS-C filter) to the [PHONS/AUX OUT] jack. (33Ωload) Set the [MASTER VOLUME] at maximum. Phones L/R: Less than -80dBm

20	020:SW Chk	Check switches on the panel. Press the switches which are displayed on the LCD. A pre-assigned note is output when depressing the switch. The test result appears on the LCD.
28	028:LCD On	Check that all LCD dots are on.
29	029:LCD Off	Check that all LCD dots are off. The LCD becomes white.
31	031:PD1 Chk	Connect the foot switch to the [FOOT SWITCH] jack. Check that the C3 note is output when starting the test program. Check that the C4 note is output when pushing the pedal and the tone is turned off when releasing the pedal. The test result appears on the LCD.
37	037:MIDI Chk	After connecting the [MIDI IN] jack and [MIDI OUT] jack with a MIDI cable, execute the test. Check that the C4 note is output and that the test result appears on the LCD.
41	041:ROM Chk2	Checks the ROM. The test result appears on the LCD.
42	042:RAM Chk2	Checks the RAMs which are connected to the CPU. The test result appears on the LCD.
46	046:Back Up 2	Performs the RAM back-up check. After checking that the beginning becomes NG, turn the power switch off. Enter the test program and perform the RAM back-up checks then check again. Check that the LCD displys OK. Note: Do not turn on the [STAND BY ON] switch on by normal mode during standing by. If this should happen, RAM data will be lost.
47	047:Factory	All RAMs are initialized and set to the factory preset date when executing this test. The result appears on the LCD.
48	048:TestExit	Exit from the test program after executing this test.

2. INITIALIZE

Except for the data listed below, all PSR-270 panel settings are reset to their initial settings whenever the power is turned on. The data listed below are backed up (i.e. retained in the memory) as long as either an AC adaptor is connected or a set of batteries is installed.

- User Song Data
- User One Touch Setting Data
- One Touch Setting Bank Number
- EZ Chord Data
- EZ Chord Bank Number Data
- Smart Chord Number
- Metronome Volume
- Touch On/Off
- Touch Sensitivity
- Split Point
- Accompaniment Split Point
- Footswitch Assign Function

Data Initialization

All data can be initialized and restored to the factory preset condition by turning on the power while holding the highest (rightmost) white key on the keyboard. “CLr Backup” will appear briefly on the display.

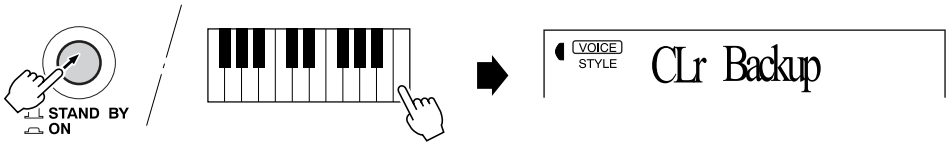

CAUTION

- All one touch setting (user) and song memory data, plus the other settings listed above, will be erased and/or changed when the data initialization procedure is carried out.
- Carrying out the data initialization procedure will usually restore normal operation if the PSR-270 freezes or begins to act erratically for any reason.

PANEL VOICE LIST

Voice Number	Bank Select MSB	Bank Select LSB	MIDI Program Change#	Voice Name
		PIANO		
001	0	112	0	Grand Piano
002	0	112	1	Bright Piano
003	0	112	3	Honky-tonk Piano
004	0	112	4	Funky Electric Piano
005	0	112	5	DX Electric Piano
006	0	112	2	MIDI Grand Piano
007	0	113	2	CP 80
008	0	113	5	Hyper Electric Piano
009	0	114	5	Bell Electric Piano
010	0	112	6	Harpsichord
011	0	112	7	Clavi
012	0	112	8	Celesta
		MALLET		
013	0	112	11	Vibraphone
014	0	112	12	Marimba
015	0	112	13	Xylophone
016	0	112	14	Tubular Bells
017	0	112	47	Timpani
018	0	112	114	Steel Drums
019	0	112	10	Music Box
		ORGAN		
020	0	112	16	Jazz Organ 1
021	0	113	16	Jazz Organ 2
022	0	112	17	Jazz Organ 3
023	0	116	16	Full Organ
024	0	114	18	Rock Organ 1
025	0	112	18	Rock Organ 2
026	0	118	16	16'+2' Organ
027	0	119	16	16'+4' Organ
028	0	112	19	Church Organ
029	0	112	20	Reed Organ
030	0	112	21	Musette Accordion
031	0	113	21	Traditional Accordion
032	0	113	23	Bandoneon
		GUITAR		
033	0	112	24	Classical Guitar
034	0	112	25	Folk Guitar
035	0	113	25	12Strings Guitar
036	0	112	26	Jazz Guitar
037	0	113	26	Octave Guitar
038	0	112	27	Clean Guitar
039	0	112	28	Muted Guitar
040	0	112	29	Overdriven Guitar
041	0	112	30	Distortion Guitar
		BASS		
042	0	112	32	Acoustic Bass
043	0	112	33	Finger Bass
044	0	112	34	Pick Bass
045	0	112	35	Fretless Bass
046	0	112	36	Slap Bass
047	0	112	38	Synth Bass
048	0	113	38	Techno Bass
049	0	113	39	Dance Bass
		ENSEMBLE		
050	0	112	48	Strings
051	0	112	49	Chamber Strings
052	0	112	50	Synth Strings
053	0	113	49	Slow Strings
054	0	112	44	Tremolo Strings
055	0	112	45	Pizzicato Strings
056	0	112	52	Choir
057	0	113	52	Choir Aahs
058	0	112	53	Choir Oohs
059	0	112	54	Synth Choir
060	0	112	55	Orchestra Hit
		STRINGS		
061	0	112	40	Violin
062	0	112	42	Cello
063	0	112	43	Contrabass
064	0	112	105	Banjo
065	0	112	46	Harp
		BRASS		
066	0	112	56	Trumpet
067	0	112	59	Muted Trumpet
068	0	112	57	Trombone
069	0	113	57	Trombone Section
070	0	112	60	French Horn
071	0	112	58	Tuba
072	0	112	61	Brass Section
073	0	112	62	Synth Brass
074	0	113	62	Jump Brass
075	0	114	62	Techno Brass
		REED		
076	0	112	64	Soprano Sax
077	0	112	65	Alto Sax
078	0	112	66	Tenor Sax
079	0	112	67	Baritone Sax
080	0	112	68	Oboe
081	0	112	69	English Horn
082	0	112	70	Bassoon
083	0	112	71	Clarinet
084	0	112	22	Harmonica
		PIPE		
085	0	112	72	Piccolo
086	0	112	73	Flute
087	0	112	75	Pan Flute
088	0	112	74	Recorder
089	0	112	79	Ocarina
		SYNTH LEAD		
090	0	112	80	Square Lead
091	0	112	81	Sawtooth Lead
092	0	112	85	Voice Lead
093	0	112	98	Crystal
094	0	112	100	Brightness
095	0	115	81	Analog Lead
		SYNTH PAD		
096	0	112	88	Fantasia
097	0	113	100	Bell Pad
098	0	112	91	Xenon Pad
099	0	112	94	Angels
100	0	113	89	Dark Moon
		DRUM KITS		
101	127	0	0	Standard Kit 1
102	127	0	1	Standard Kit 2
103	127	0	8	Room Kit
104	127	0	16	Rock Kit
105	127	0	24	Electronic Kit
106	127	0	25	Analog Kit
107	127	0	27	Dance Kit
108	127	0	32	Jazz Kit
109	127	0	40	Brush Kit
110	127	0	48	Symphony Kit

GM VOICE LIST

Voice Number	Bank Select MSB	Bank Select LSB	MIDI Program Change#	Voice Name
		PIANO		
111	0	0	0	Acoustic Grand Piano
112	0	0	1	Bright Acoustic Piano
113	0	0	2	Electric Grand Piano
114	0	0	3	Honky-tonk Piano
115	0	0	4	Electric Piano 1
116	0	0	5	Electric Piano 2
117	0	0	6	Harpsichord
118	0	0	7	Clavi
		CHROMATIC		
119	0	0	8	Celesta
120	0	0	9	Glockenspiel
121	0	0	10	Music Box
122	0	0	11	Vibraphone
123	0	0	12	Marimba
124	0	0	13	Xylophone
125	0	0	14	Tubular Bells
126	0	0	15	Dulcimer
		ORGAN		
127	0	0	16	Drawbar Organ
128	0	0	17	Percussive Organ
129	0	0	18	Rock Organ
130	0	0	19	Church Organ
131	0	0	20	Reed Organ
132	0	0	21	Accordion
133	0	0	22	Harmonica
134	0	0	23	Tango Accordion
		GUITAR		
135	0	0	24	Acoustic Guitar (nylon)
136	0	0	25	Acoustic Guitar (steel)
137	0	0	26	Electric Guitar (jazz)
138	0	0	27	Electric Guitar (clean)
139	0	0	28	Electric Guitar (muted)
140	0	0	29	Overdriven Guitar
141	0	0	30	Distortion Guitar
142	0	0	31	Guitar Harmonics
		BASS		
143	0	0	32	Acoustic Bass
144	0	0	33	Electric Bass (finger)
145	0	0	34	Electric Bass (pick)
146	0	0	35	Fretless Bass
147	0	0	36	Slap Bass 1
148	0	0	37	Slap Bass 2
149	0	0	38	Synth Bass 1
150	0	0	39	Synth Bass 2
		STRINGS		
151	0	0	40	Violin
152	0	0	41	Viola
153	0	0	42	Cello
154	0	0	43	Contrabass
155	0	0	44	Tremolo Strings
156	0	0	45	Pizzicato Strings
157	0	0	46	Orchestral Harp
158	0	0	47	Timpani
		ENSEMBLE		
159	0	0	48	Strings Ensemble 1
160	0	0	49	Strings Ensemble 2
161	0	0	50	Synth Strings 1
162	0	0	51	Synth Strings 2
163	0	0	52	Choir Aahs
164	0	0	53	Voice Oohs
165	0	0	54	Synth Voice
166	0	0	55	Orchestra Hit
		BRASS		
167	0	0	56	Trumpet
168	0	0	57	Trombone
169	0	0	58	Tuba
170	0	0	59	Muted Trumpet
171	0	0	60	French Horn
172	0	0	61	Brass Section
173	0	0	62	Synth Brass 1
174	0	0	63	Synth Brass 2
		REED		
175	0	0	64	Soprano Sax
176	0	0	65	Alto Sax
177	0	0	66	Tenor Sax
178	0	0	67	Baritone Sax
179	0	0	68	Oboe
180	0	0	69	English Horn
181	0	0	70	Bassoon
182	0	0	71	Clarinet
		PIPE		
183	0	0	72	Piccolo
184	0	0	73	Flute
185	0	0	74	Recorder
186	0	0	75	Pan Flute
187	0	0	76	Blown Bottle
188	0	0	77	Shakuhachi
189	0	0	78	Whistle
190	0	0	79	Ocarina
		SYNTH LEAD		
191	0	0	80	Lead 1 (square)
192	0	0	81	Lead 2 (sawtooth)
193	0	0	82	Lead 3 (calliope)
194	0	0	83	Lead 4 (chiff)
195	0	0	84	Lead 5 (charang)
196	0	0	85	Lead 6 (voice)
197	0	0	86	Lead 7 (fifth)
198	0	0	87	Lead 8 (bass+Lead)
		SYNTH PAD		
199	0	0	88	Pad 1 (new age)
200	0	0	89	Pad 2 (warm)
201	0	0	90	Pad 3 (polysynth)
202	0	0	91	Pad 4 (choir)
203	0	0	92	Pad 5 (bowed)
204	0	0	93	Pad 6 (metallic)
205	0	0	94	Pad 7 (halo)
206	0	0	95	Pad 8 (sweep)
		SYNTH EFFECTS		
207	0	0	96	FX 1 (rain)
208	0	0	97	FX 2 (soundtrack)
209	0	0	98	FX 3 (crystal)
210	0	0	99	FX 4 (atmosphere)
211	0	0	100	FX 5 (brightness)
212	0	0	101	FX 6 (goblins)
213	0	0	102	FX 7 (echoes)
214	0	0	103	FX 8 (sci-fi)
		ETHNIC		
215	0	0	104	Sitar
216	0	0	105	Banjo
217	0	0	106	Shamisen
218	0	0	107	Koto
219	0	0	108	Kalimba
220	0	0	109	Bagpipe

Voice Number	Bank Select MSB	Bank Select LSB	MIDI Program Change #	Voice Name
221	0	0	110	Fiddle
222	0	0	111	Shanai
PERCUSSIVE				
223	0	0	112	Tinkle Bell
224	0	0	113	Agogo
225	0	0	114	Steel Drums
226	0	0	115	Woodblock
227	0	0	116	Taiko Drum
228	0	0	117	Melodic Tom
229	0	0	118	Synth Drum
230	0	0	119	Reverse Cymbal

Voice Number	Bank Select MSB	Bank Select LSB	MIDI Program Change #	Voice Name
SOUND EFFECTS				
231	0	0	120	Guitar Fret Noise
232	0	0	121	Breath Noise
233	0	0	122	Seashore
234	0	0	123	Bird Tweet
235	0	0	124	Telephone Ring
236	0	0	125	Helicopter
237	0	0	126	Applause
238	0	0	127	Gunshot

STYLE LIST

Style Number	Style Name
8BEAT	
001	8Beat Pop 1
002	8Beat Pop 2
003	8Beat Uptempo
004	8Beat Standard
005	Folkrock
006	Pop Rock
007	8Beat Medium
008	8Beat Ballad
009	Epic Ballad
010	Piano Ballad
16BEAT	
011	16Beat Shuffle 1
012	16Beat Shuffle 2
013	16Beat Pop
014	Funk 1
015	16Beat Ballad 1
016	16Beat Ballad 2
017	Soul Ballad
6/8 BALLAD	
018	Slow Rock 1
019	Slow Rock 2
020	6/8 Ballad
DANCE	
021	Dance Pop 1
022	Dance Pop 2
023	Techno
024	Eurobeat
025	Euro House
026	Hip Hop
027	Synth Boogie

Style Number	Style Name
DISCO	
028	70s Disco
029	Disco Tropical
030	Polka Pop
ROCK	
031	8Beat Rock Ballad
032	16Beat Rock Ballad
033	Hard Rock
034	Rock Shuffle
035	6/8 Heavy Rock
036	US Rock
ROCK & ROLL	
037	Rock & Roll 1
038	Rock & Roll 2
039	Boogie
040	Twist
RHYTHM & BLUES	
041	R&B
042	Funk 2
043	Soul
044	Gospel Shuffle
045	6/8 Gospel
046	4/4 Blues
CONTEMPORARY JAZZ	
047	Cool Jazz
048	Jazz Ballad
049	Jazz Waltz
050	Fusion

Style Number	Style Name
TRADITIONAL JAZZ	
051	Swing
052	Big Band Swing
053	Big Band Ballad
054	Jazz Quartet
055	Dixieland
AMERICAS	
056	Cajun
057	Banda
058	Mariachi
059	Tejano
060	Cumbia
COUNTRY & WESTERN	
061	Bluegrass
062	Country 2/4
063	Country Rock
064	Country Ballad
065	Country Shuffle
066	Country Waltz
BALLROOM LATIN	
067	Cha Cha
068	Rhumba
069	Pasodoble
070	Tango Continental
BALLROOM STANDARD	
071	Foxtrot
072	Jive

Style Number	Style Name
MARCH & WALTZ	
073	March 1
074	March 2
075	6/8 March
076	Polka
077	Standard Waltz
078	German Waltz
079	Viennese Waltz
080	Musette Waltz
LATIN	
081	Bossa Nova 1
082	Bossa Nova 2
083	Salsa
084	Samba
085	Mambo
086	Beguine
087	Merengue
088	Bolero Lento
CARIBBEAN	
089	Reggae 12
090	Pop Reggae
PIANIST	
091	Rock-a-Ballad
092	8Beat
093	Swing
094	Jazz Ballad
095	2Beat
096	Boogie
097	Ragtime
098	Arpeggio
099	Waltz
100	Happy

■ MIDI IMPLEMENTATION CHART

[Portable Keyboard]
Model: PSR-270

MIDI Implementation Chart

Date: 7-Dec-1998
Version: 1.0

Function	Transmitted	Recognized	Remarks
Basic Default	1 - 16	1 - 16 *1	
Channel Changed	1 - 16	1 - 16 *1	
Default	3	3	
Mode Messages	X	X	
Altered	**********	X	
Note	0 - 127	0 - 127	
Number : True voice	**********	0 - 127	
Velocity Note ON	O 9nH, v=1 - 127	O 9nH, v=1 - 127	
Note OFF	O 9nH, v=0	O 9nH, v=0 or 8nH	
After key's	X	X	
Touch Ch's	X	X	
Pitch Bender	X	O	
Control Change 0, 32	O	O	Bank Select
1	X *2	O	Modulation
7, 10	O	O	
11	X *2	O	Expression
6, 38	X *2	O	Data Entry
64	O	O	Sustain
84	X *2	O	Portamento Control
91, 93, 94	O	O	Effect Depth
96, 97	X	O	Data Inc, Dec
100, 101	X *2	O	RPN LSB, MSB
120	X	O	All Sound Off
121	X	O	Reset All Controllers
Program	O 0 - 127	O 0 - 127	
Change : True #	**********		
System Exclusive	O *3	O *3	
System : Song Position	X	X	
: Song Select	X	X	
Common : Tune	X	X	
System : Clock	O	O *4	
Real Time : Commands	O	*5 O	*5
Aux : Local ON/OFF	X	X	
: All Notes OFF	X	O (123 - 127)	
Messages : Active Sense	O	O	
: Reset	X	X	

Mode 1 : OMNI ON, POLY
Mode 2 : OMNI ON, MONO
O : Yes
Mode 3 : OMNI OFF, POLY
Mode 4 : OMNI OFF, MONO
X : No

PORTATONE

PSR-270

PARTS LIST

■**CONTENTS**

OVERALL ASSEMBLY 2
KEYBOARD ASSEMBLY 4
ELECTRICAL PARTS 5

Note) DESTINATION ABBREVIATIONS

J : Japanese model	A : Australian model
U : U.S. model	E : European model
C : Canadian model	D : German model
X : General model	B : British model
M : South African model	I : Indonesian model
H : North European model	

■ WARNING

Components having special characteristics are marked ⚠ and must be replaced with parts having specifications equal to those originally installed.

■ The numbers in “QTY” shows quantities for each unit.
■ The parts with “– –” in “Part No.” are not available as spare parts.
■ This mark “ } ” in the REMARKS column means these parts are interchangerble.

■ OVERALL ASSEMBLY

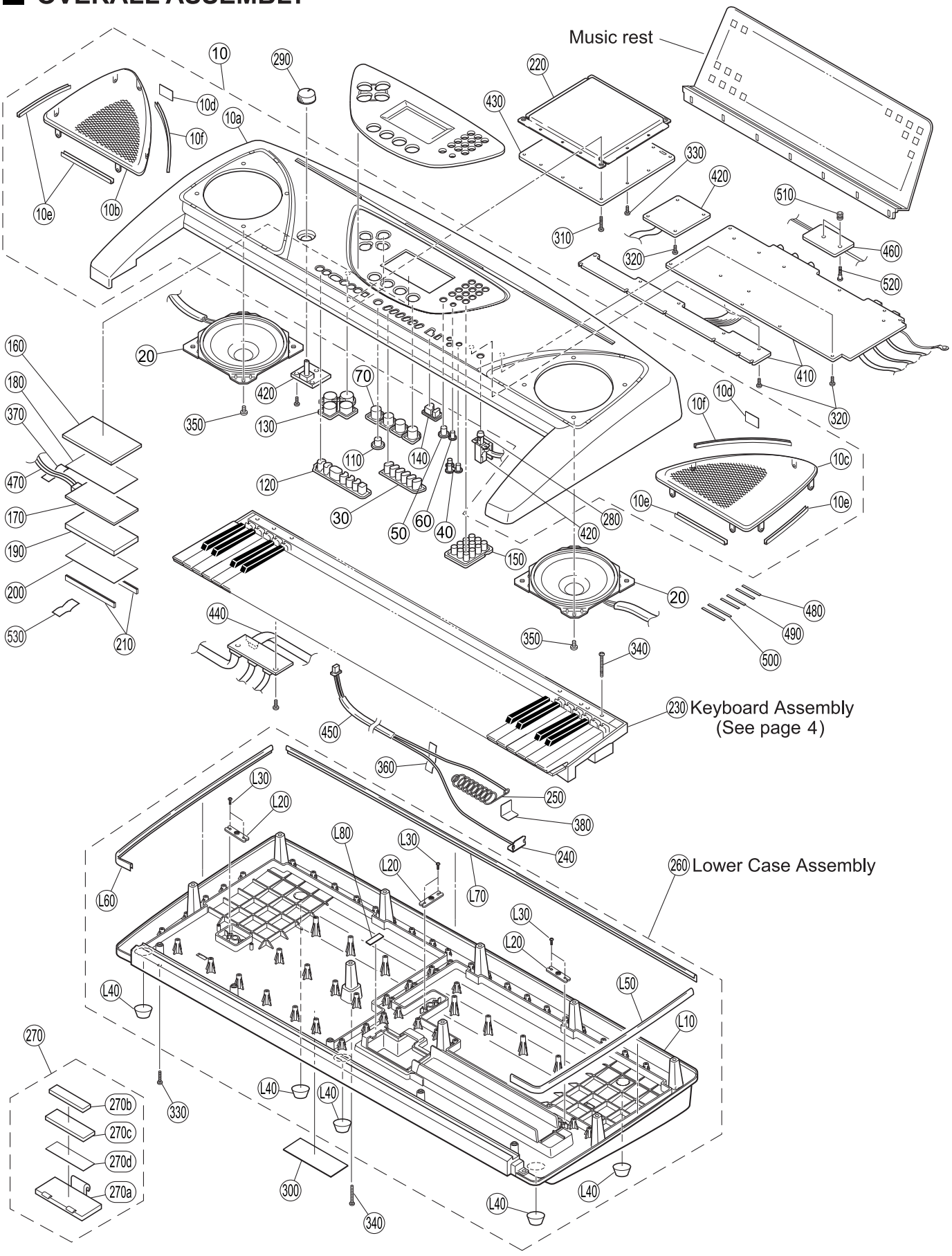

	REF NO.	PART NO.	DESCRIPTION		部品名	REMARKS	QTY	RANK
			OVERALL ASSEMBLY		総組立	PSR-270 J,U,C,W,O		
		--	Overall Assembly		総組立	(V332640)		
*	10	V3328500	Upper Case Assembly		上ケースAss'y			
	10a	--	Upper Case		上ケース加工品	(V332860)		
*	10b	V3115700	SP Grill	Left	SPグリルL塗装品			
*	10c	V3115800	SP Grill	Right	SPグリルR塗装品			
	10d	VJ861500	Vibration-proof Tape	18X25	防振テープ		2	03
	10e	--	Spacer		スペーサー	(V338570)	4	
	10f	--	Spacer		スペーサー	(V338580)	2	
*	20	XV806A00	Speaker	12.0cm 4ohm 3W	スピーカ		2	
*	30	V3338400	PN Rubber Contact	A99	PNラバーA99	SONG MEMORY/SONG TRACK (1.2.3.4.5A.6A)		
*	40	V3338500	PN Rubber Contact	B99	PNラバーB99	REVERB.DUAL.HARMONY		
*	50	V3338600	PN Rubber Contact	C99	PNラバーC99	DEMO		
*	60	V3338700	PN Rubber Contact	D99	PNラバーD99	TOUCH		
*	70	V3635000	PN Rubber Contact	R99	PNラバーR99	SONG.VOICE.STYLE.FUNCTION		
*	110	V3339300	PN Rubber Contact	J99	PNラバーJ99	RECORD		
*	120	V3339400	PN Rubber Contact	K99	PNラバーK99	ACMP ON/OFF.SYNC-START START/STOP.INTRO/ENDING A-MAIN-B.CHORD GUIIDE		
*	130	V3635200	PN Rubber Contact	S99	PNラバーS99	+-.UP.DOUN		
	140	V2117400	PN Rubber Contact	C79	PNラバーC79	PORTABLE GRAND.METRONOME		02
*	150	V3638900	PN Rubber Contact	T99	PNラバーT99印刷品	1.2.3.4.5.6.7.8.9.-.0.+		
*	160	V3383300	LCD	TYPE-B	液晶ディスプレイ			
*	170	V3384700	EL Light	NELTA3115G(A2)	ELライト			
*	180	V3383800	Diffusion Sheet B	PET	拡散シートB			
	190	--	EL Supporter B	PE	ELサポーターB	(V338360)		
	200	--	Protection Sheet B	PET	保護シートB	(V338400)		
	210	V3755900	Rubber Connector	SS-150L	ゴムコネクター		2	
	220	--	Shield Box		シールドボックス	(V331290)		
	230	V2386100	Keyboard Assembly	16M C61 MKS3	16M鍵盤Assyサブ基			
	240	VI663700	Terminal		端子板			
	250	VI865800	Spring Terminal		接点バネ			
*	260	V3337900	Lower Case Assembly		下ケースAss'y			
	270	VM754600	Battery Cover Assembly		バッテリーカバーAssy			
	270a	VI105000	Battery Cover	BL	バッテリーカバー			04
	270b	VI107900	Battery Cushion	WH	バッテリークッション			01
	270c	--	Vibration-proof Pad	WH	防振パット	(VI10510)	2	
	270d	--	Vibration-proof Tape	6X 25X0.3	防振テープ	(VJ56490)	3	
	280	VQ218800	Knob		プッシュツマミ	STANDBY/ON		03
	290	VU432400	Knob		Vツマミ	MASTER VOLUME		01
	300	--	Label		規格.製番ラベル	(V332760)		
	310	EP600250	Bind Head Tapping Screw-B	3.0X8 MFZN2Y	+バインドBタイト		10	01
	320	EP600280	Bind Head Tapping Screw-P	3.0X8 MFZN2Y	+バインドPタイト		35	01
	330	EP600300	Bind Head Tapping Screw-P	3.0X12 MFZN2Y	+バインドPタイト		19	01
	340	VK228100	Bind Head Tapping Screw-P	3.0X25 MFZN2Y	+バインドPタイト		5	01
	350	VB931600	Bind Head Tapping Screw-P	4.0X8 MFZN2BL	+バインドPタイト		8	01
	360	VN195400	Adhesive Tape	12X70	粘着テープ		2	03
	370	VA126100	Adhesive Tape	12X50	粘着テープ		12	03
	380	VJ861500	Vibration-proof Tape	18X25	防振テープ		2	03
*	410	V3347400	Circuit Board	AM/PN	AM／PNシート			
*	420	V3347500	Circuit Board	PVS	PVSシート			
*	430	V3384900	Circuit Board	DM	DMシート			
	440	--	Connector Assembly	DM-MKS	DM－MKS線材	(V351770)		
	450	--	Connector Assembly	BATT	BATT束線	(V351780)		
*	460	V3480900	Circuit Board	INV	INVシート			
	470	--	Connector Assembly	EL	EL線材	(V353100)		
	480	--	Dust Proof Cloth	53X4X0.35	不織布	(V260360)	4	
	490	--	Dust Proof Cloth	42X4X0.35	不織布	(V385070)	2	
	500	--	Dust Proof Cloth	42X4X0.35	不織布	(V385080)	8	
	510	--	INV Bush		INVブッシュ	(V376680)	2	
	520	V3827600	Screw	3.0X14 MFZN2BL	段付きBタイトネジ		2	
	530	--	EL Supporter	PE	ELサポーターU	(V383700)		
			ACCESSORIES		付属品			
*		V3385300	Music Rest		譜面立て			
⚠		VT368600	AC Adaptor	PA-3B JP	ACアダプター	J		09
*		V3328200	Japanese Guide Sheet		和文シート袋入り	J		
⚠		VY944300	AC Adaptor	PA-32 CH	ACアダプター	O		10

* New Parts (新規部品)　　RANK : Japan only

	REF NO.	PART NO.	DESCRIPTION		部品名	REMARKS	QTY	RANK
*		V3328300	Chinese Guide Sheet Set		中文シート袋入り	O		
		V3337900	Lower Case Assembly		下ケースAss'y			
	L10	--	Lower Case	CH	下ケース成形品		3	
	L20	VI104400	Holder.Leg	3.0X8 MFZN2Y	脚取り付け金具		6	01
	L30	EP600280	Bind Head Tapping Screw-P	BL T1.6	+バインドPタイト	(V217840)	4	01
	L40	CB043750	Foot	360X15X0.5	ゴム足	(V217850)	2	
	L50	--	Dust Proof Cloth	885X15X0.5	不織布	(V217860)		
	L60	--	Dust Proof Cloth	290X20X0.5	不織布	(VU95430)		
	L70	--	Dust Proof Cloth	12X32X0.5	不織布			
	L80	--	Vibration-proof Tape		防振テープ			

* New Parts (新規部品)　　RANK : Japan only

■ KEYBOARD ASSEMBLY

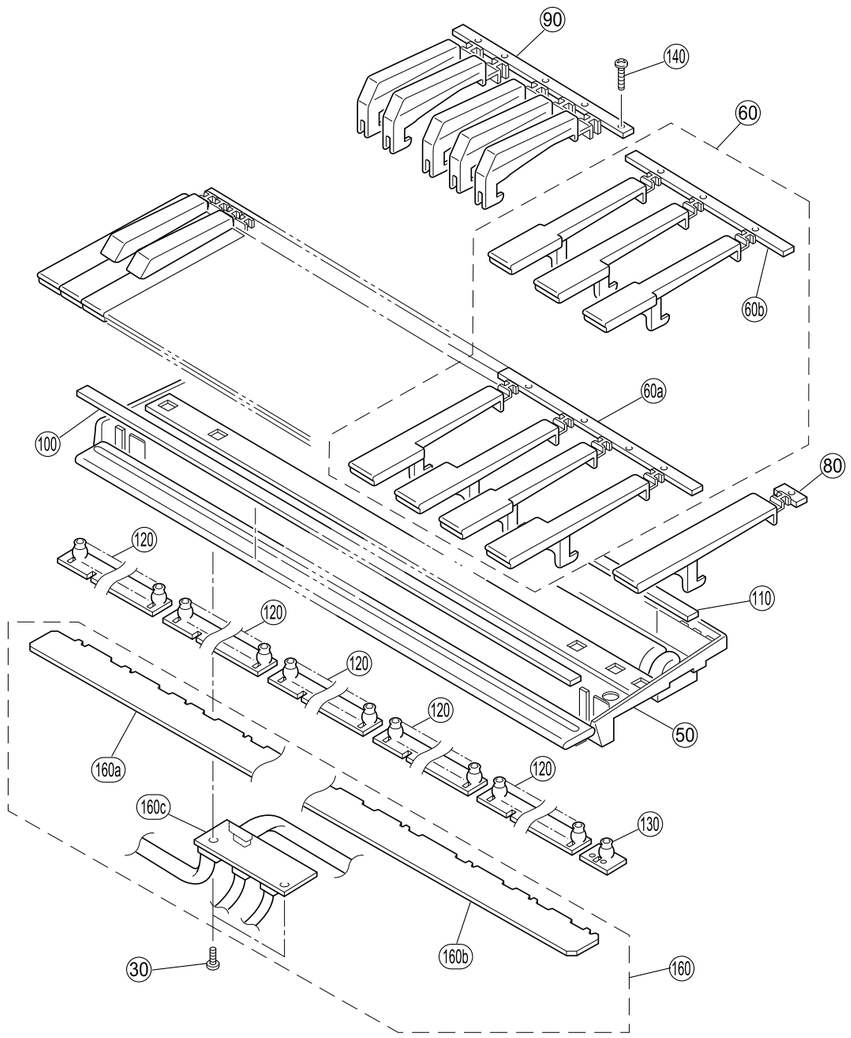

* Refer to the CIRCUIT BOARD LAY-OUT section of this manual regarding 160d,160e,160f,160g cables.

REF NO.	PART NO.	DESCRIPTION		部品名	REMARKS	QTY	RANK
		KEYBOARD ASSEMBLY		鍵盤Ａｓｓ’ｙ	PSR-270		
	V2386100	Keyboard Assembly	16M C61 MKS3	１６Ｍ鍵盤Ａｓｓｙサブ基			
30	EP600280	Bind Head Tapping Screw-P	3.0X8 MFZN2Y	＋バインドＰタイト		2	01
30	EP630220	Bind Head Tapping Screw-P	3.0X8 MFZN2BL	＋バインドＰタイト		2	01
50	--	Frame	C61	フレーム	(VS15380)		
60	VH1809C0	White Key	16L CEGBDFA	白鍵ＣＥＧＢＤＦＡ		5	05
60a	--	White Key	16L CEGB	白鍵ＣＥＧＢ	(VH18090)	5	03
60b	--	White Key	16L DFA	白鍵ＤＦＡ	(VH18100)	5	03
80	VH181100	White Key	16L C'	白鍵Ｃ’			01
90	VH181200	Black Key	16L #	黒鍵		5	03
100	VH181300	Felt		フェルト			03
110	VH181400	Rubber Sheet		ゴムシート			01
120	VU328400	Rubber Contact	16M OCT 2M 12KEYS	接点ゴム		5	06
130	VU328500	Rubber Contact	16M C' 2M 1KEY	接点ゴム			05
140	EP600310	Bind Head Tapping Screw-P	3.0X16 MFZN2Y	＋バインドＰタイト		21	01
140	VB205200	Bind Head Tapping Screw-P	3.0X16 MFZN2BL	＋バインドＰタイト		21	01
140	VS756700	Bind Head Tapping Screw-P	3.0X16 MFZN2B	＋バインドＰタイト		21	01
150	TX920280	Grease	G-31KA	グリス			10
160	--	Circuit Board	KBS SW	鍵盤ＳＷシート ＭＫＳ３	(V240470)		
160a	VV583800	Circuit Board	MK-L	ＭＫ－Ｌ シート			09
160b	VV583900	Circuit Board	MK-H	ＭＫ－Ｈ シート			09
160c	V2404900	Circuit Board	MKS3	ＭＫＳ３ シート			10
160d	VV583100	Cable	12 MK-A	ケーブル ＭＫ－Ａ			
160e	VV583600	Cable	12 MK-B	ケーブル ＭＫ－Ｂ			
160f	VV583500	Cable	7 MK-C	ケーブル ＭＫ－Ｃ			
160g	VV583700	Cable	5 MK-D	ケーブル ＭＫ－Ｄ			
160h	--	Sponge	16M	スポンジ Ａ	(VV61890)	2	
160i	--	Sponge	16M	スポンジ Ｂ	(VV61900)	2	
160j	--	Adhesive Tape	12	両面テープ Ｃ	(VV61910)		
160k	--	Adhesive Tape	12	両面テープ Ｄ	(VV61920)	3	

* New Parts （新規部品）

RANK : Japan only

ELECTRICAL PARTS

	REF NO.	PART NO.	DESCRIPTION		部品名	REMARKS	QTY	RANK
			ELECTRICAL PARTS		電気部品	PSR-270		
*		V3347400	Circuit Board	AM/PN	AM／PNシート	(XV672A0)		
*		V3384900	Circuit Board	DM	DMシート	(XU438B0)		
*		V3480900	Circuit Board	INV	INVシート	(XV707C0)		
		VV583900	Circuit Board	MK-H	MK－Hシート	(VV70120)		09
		VV583800	Circuit Board	MK-L	MK－Lシート	(VV70110)		09
		V2404900	Circuit Board	16M KBS	MKS3シート	(XU878B0)		10
*		V3347500	Circuit Board	PVS	PVSシート	(XV710A0)		
*		V3347400	Circuit Board	AM/PN	AM／PNシート	(XV672A0)		
		EP600190	Bind Head Tapping Screw-B	3.0X8 MFZN2BL	+バインドBタイト			01
		--	Jumper Wire	0.55	ジャンパー線	(VA07890)		
	C604	VC694800	Semiconductive Cera. Cap.	0.1 25V Z	半導体セラコン			01
	C707	UR828100	Electrolytic Cap.	100.00 10.0V	ケミコン			01
	C708	VC694800	Semiconductive Cera. Cap.	0.1 25V Z	半導体セラコン			01
	C709	VC694800	Semiconductive Cera. Cap.	0.1 25V Z	半導体セラコン			01
	C801	VT757800	Monolithic Ceramic Cap.	1.000 25V Z	積層セラコン			01
	C802	VT757800	Monolithic Ceramic Cap.	1.000 25V Z	積層セラコン			01
	C805	FG612470	Ceramic Capacitor-B	470P 50V K	セラコン（B）			01
	C806	FG612470	Ceramic Capacitor-B	470P 50V K	セラコン（B）			01
	C807	UR828100	Electrolytic Cap.	100.00 10.0V	ケミコン			01
	C808	UR837330	Electrolytic Cap.	33.00 16.0V	ケミコン			01
	C809	UR837220	Electrolytic Cap.	22.00 16.0V	ケミコン			01
	C810	VC694800	Semiconductive Cera. Cap.	0.1 25V Z	半導体セラコン			01
	C811	UR848100	Electrolytic Cap.	100.00 25.0V	ケミコン			01
	C812	UA654470	Mylar Capacitor	0.047 50V J	マイラーコン			01
	-815	UA654470	Mylar Capacitor	0.047 50V J	マイラーコン			01
	C816	UR837470	Electrolytic Cap.	47.00 16.0V	ケミコン			01
	C817	UR837470	Electrolytic Cap.	47.00 16.0V	ケミコン			01
	C901	UR828100	Electrolytic Cap.	100.00 10.0V	ケミコン			01
	C902	VC694800	Semiconductive Cera. Cap.	0.1 25V Z	半導体セラコン			01
	C903	UR867100	Electrolytic Cap.	10.00 50.0V	ケミコン			01
	C904	VC694800	Semiconductive Cera. Cap.	0.1 25V Z	半導体セラコン			01
	C905	UR867100	Electrolytic Cap.	10.00 50.0V	ケミコン			01
	C906	VC694800	Semiconductive Cera. Cap.	0.1 25V Z	半導体セラコン			01
	C907	UR867100	Electrolytic Cap.	10.00 50.0V	ケミコン			01
	C908	VT848900	Electrolytic Cap.	6800 25.0V	ケミコン			03
	CN602	VI878400	Cable Holder	51048 6P TE	ケーブルホルダー			01
	CN701	VI878700	Cable Holder	51048 9P TE	ケーブルホルダー			01
	CN702	VI878700	Cable Holder	51048 9P TE	ケーブルホルダー			01
	CN703	VI879400	Cable Holder	51048 16P TE	ケーブルホルダー			01
	CN704	VI878300	Cable Holder	51048 5P TE	ケーブルホルダー			01
	CN801	VI878200	Cable Holder	51048 4P TE	ケーブルホルダー			01
	CN802	VI878100	Cable Holder	51048 3P TE	ケーブルホルダー			01
	CN803	VI878100	Cable Holder	51048 3P TE	ケーブルホルダー			01
	CN901	VI878300	Cable Holder	51048 5P TE	ケーブルホルダー			01
	CN902	VI878200	Cable Holder	51048 4P TE	ケーブルホルダー			01
	CN903	LB918020	Base Post Connector	XH 2P TE	ベーススツキポスト			01
	CN907	VI878000	Cable Holder	51048 2P TE	ケーブルホルダー			01
	D701	VB941200	Diode	1SS133.1SS176	ダイオード			01
	-708	VB941200	Diode	1SS133.1SS176	ダイオード			01
⚠	D901	VL723600	Diode	20E1-FC4	ダイオード			01
⚠	D902	VL723600	Diode	20E1-FC4	ダイオード			01
	D903	VB941200	Diode	1SS133.1SS176	ダイオード			01
	D904	VB481900	Diode	11ES4	ダイオード			01
	HS001	--	Heat Sink		放熱板	(V243900)		
	IC701	XV226A00	IC	KS0066U-10B	IC	LCD DRIVER		05
	IC801	XQ619A00	IC	LA4705NA	IC	POWER AMP 17W		05
	IC901	XT625A00	IC	S-81250SGY-Z	IC	REGULATOR +5V		02
	IC902	XU814A00	IC	PQ05RD11	IC	REGULATOR +5V		03
	J702	--	Jumper Wire	0.55	ジャンパー線	(VA07890)		
	J901	--	Jumper Wire	0.55	ジャンパー線	(VA07890)		
	JK601	VB312600	Phone Jack	YKB21-5012	ホーンコネクタ（黒）	FOOT SWITCH		02
	JK602	VJ107200	DIN Connector	5P YKF51-5050	DINコネクタ	MIDI IN		01
	JK603	VJ107200	DIN Connector	5P YKF51-5050	DINコネクタ	MIDI OUT		01
	JK801	LB101870	Phone Jack	YKB21-5006	ホーンコネクタ	PHONES/AUX OUT		03
⚠	JK901	VC664500	Connector	HEC2305	電源コネクタ	DC-IN		01
	L601	VB835000	Coil	FL5R200QNT	コイル 20U			01
	-610	VB835000	Coil	FL5R200QNT	コイル 20U			01
	L601	VF968800	Coil	SBT-0260TF	コイル SB 60uH			01

*** : New parts** **RANK : Japan only**

	REF NO.	PART NO.	DESCRIPTION		部品名	REMARKS	QTY	RANK
	-610	VF968800	Coil	SBT-0260TF	コイル SB 60uH			01
	L801	VB835000	Coil	FL5R200QNT	コイル 20U			01
	-803	VB835000	Coil	FL5R200QNT	コイル 20U			01
	L801	VF968800	Coil	SBT-0260TF	コイル SB 60uH			01
	-803	VF968800	Coil	SBT-0260TF	コイル SB 60uH			01
⚠	L901	VB835000	Coil	FL5R200QNT	コイル 20U			01
⚠	L901	VF968800	Coil	SBT-0260TF	コイル SB 60uH			01
⚠	L902	VB835000	Coil	FL5R200QNT	コイル 20U			01
⚠	L902	VF968800	Coil	SBT-0260TF	コイル SB 60uH			01
	R603	HF755220	Carbon Resistor	220.0 1/4 J	カーボン抵抗			01
	R723	HF755220	Carbon Resistor	220.0 1/4 J	カーボン抵抗			01
	R724	HF757910	Carbon Resistor	91.0K 1/4 J	カーボン抵抗			01
	R725	HF754680	Carbon Resistor	68.0 1/4 J	カーボン抵抗			01
	R801	HF757270	Carbon Resistor	27.0K 1/4 J	カーボン抵抗			01
	R802	HF757270	Carbon Resistor	27.0K 1/4 J	カーボン抵抗			01
	R803	HF756680	Carbon Resistor	6.8K 1/4 J	カーボン抵抗			01
	R804	HF756680	Carbon Resistor	6.8K 1/4 J	カーボン抵抗			01
	R805	HF757100	Carbon Resistor	10.0K 1/4 J	カーボン抵抗			01
	R806	HF753220	Carbon Resistor	2.2 1/4 J	カーボン抵抗			01
	-809	HF753220	Carbon Resistor	2.2 1/4 J	カーボン抵抗			01
	R810	HF755100	Carbon Resistor	100.0 1/4 J	カーボン抵抗			01
	R811	HF755100	Carbon Resistor	100.0 1/4 J	カーボン抵抗			01
	R813	HF755330	Carbon Resistor	330.0 1/4 J	カーボン抵抗			01
	R814	HF755330	Carbon Resistor	330.0 1/4 J	カーボン抵抗			01
	R901	HF756100	Carbon Resistor	1.0K 1/4 J	カーボン抵抗			01
	RA702	V0072900	Resistor Array	EXB-Z6N222J	抵抗アレイ			01
	TH701	VR346900	Thermistor	ERTD2FGJ801S 800	サーミスタ			03
⚠	TH901	VU847300	Protector Switch	RUE185 1.85A 30V	ポリスイッチ			03
	W0602	--	Connector Assembly	MIDI	MIDI線材	(V221400)		
	W0703	--	Connector Assembly	PN-SW	PN－SW線材	(V221410)		
	W0704	--	Connector Assembly	AM/PN	AM／PN線材	(V336170)		
	W0705	--	Connector Assembly	PVS	PVS線材	(V336160)		
	W0801	--	Connector Assembly	AM-VR	AM－VR線材	(V348020)		
	W0802	--	Connector Assembly	SP-R	SP－R線材	(V348300)		
	W0803	--	Connector Assembly	SP-L	SP－L線材	(V348170)		
	W0901	--	Connector Assembly	VDD	VDD線材	(V351760)		
	W0902	--	Connector Assembly	PSW	PSW線材	(V351750)		
	W0903	--	Connector Assembly	GND	GND線材	(V251240)		
	W0904	--	Connector Assembly	INV	INV線材	(V348080)		
	ZD901	VG439500	Zener Diode	MTZ J 10.0B 10.0V	ツェナーダイオード			01
*		V3384900	Circuit Board	DM	DMシート	(XU438B0)		
		EP600190	Bind Head Tapping Screw-B	3.0X8 MFZN2BL	+バインドBタイト			01
	C101	UR828100	Electrolytic Cap.	100.00 10.0V	ケミコン			01
	C102	VC694800	Semiconductive Cera. Cap.	0.1 25V Z	半導体セラコン			01
	C104	FG652100	Ceramic Capacitor-SL	100P 50V J	セラコン（SL）			01
	C105	VC694800	Semiconductive Cera. Cap.	0.1 25V Z	半導体セラコン			01
	C106	UR828100	Electrolytic Cap.	100.00 10.0V	ケミコン			01
	C107	VC694800	Semiconductive Cera. Cap.	0.1 25V Z	半導体セラコン			01
	-109	VC694800	Semiconductive Cera. Cap.	0.1 25V Z	半導体セラコン			01
	C110	UR828100	Electrolytic Cap.	100.00 10.0V	ケミコン			01
	C111	UR828100	Electrolytic Cap.	100.00 10.0V	ケミコン			01
	C112	VC694800	Semiconductive Cera. Cap.	0.1 25V Z	半導体セラコン			01
	C113	UR828100	Electrolytic Cap.	100.00 10.0V	ケミコン			01
	C114	VC694800	Semiconductive Cera. Cap.	0.1 25V Z	半導体セラコン			01
	C115	UR828100	Electrolytic Cap.	100.00 10.0V	ケミコン			01
	C116	VC694800	Semiconductive Cera. Cap.	0.1 25V Z	半導体セラコン			01
	C117	UR828100	Electrolytic Cap.	100.00 10.0V	ケミコン			01
	C118	VC694800	Semiconductive Cera. Cap.	0.1 25V Z	半導体セラコン			01
	C119	UR828100	Electrolytic Cap.	100.00 10.0V	ケミコン			01
	C120	VC694800	Semiconductive Cera. Cap.	0.1 25V Z	半導体セラコン			01
	C201	VC694800	Semiconductive Cera. Cap.	0.1 25V Z	半導体セラコン			01
	C202	VC694800	Semiconductive Cera. Cap.	0.1 25V Z	半導体セラコン			01
	C301	VC694800	Semiconductive Cera. Cap.	0.1 25V Z	半導体セラコン			01
	C302	VC694800	Semiconductive Cera. Cap.	0.1 25V Z	半導体セラコン			01
	C303	UR828100	Electrolytic Cap.	100.00 10.0V	ケミコン			01
	C501	VC694800	Semiconductive Cera. Cap.	0.1 25V Z	半導体セラコン			01
	C502	UR837470	Electrolytic Cap.	47.00 16.0V	ケミコン			01
	C503	UR837470	Electrolytic Cap.	47.00 16.0V	ケミコン			01
	C504	FG613220	Ceramic Capacitor-B	2200P 50V K	セラコン（B）			01

*** : New parts** **RANK : Japan only**

REF NO.	PART NO.	DESCRIPTION		部品名	REMARKS	QTY	RANK
C505	**FG613220**	Ceramic Capacitor-B	2200P 50V K	セラコン（B）			01
C506	**FG612220**	Ceramic Capacitor-B	220P 50V K	セラコン（B）			01
C507	**FG612220**	Ceramic Capacitor-B	220P 50V K	セラコン（B）			01
C508	**FG612330**	Ceramic Capacitor-B	330P 50V K	セラコン（B）			01
C509	**FG612330**	Ceramic Capacitor-B	330P 50V K	セラコン（B）			01
C510	**UR866470**	Electrolytic Cap.	4.70 50.0V	ケミコン			01
C511	**UR866470**	Electrolytic Cap.	4.70 50.0V	ケミコン			01
C512	**VC694800**	Semiconductive Cera. Cap.	0.1 25V Z	半導体セラコン			01
C514	**UR837470**	Electrolytic Cap.	47.00 16.0V	ケミコン			01
C515	**FG652100**	Ceramic Capacitor-SL	100P 50V J	セラコン（SL）			01
C516	**FG652100**	Ceramic Capacitor-SL	100P 50V J	セラコン（SL）			01
C601	**VC694800**	Semiconductive Cera. Cap.	0.1 25V Z	半導体セラコン			01
C602	**FG613100**	Ceramic Capacitor-B	1000P 50V K	セラコン（B）			01
C603	**VC694800**	Semiconductive Cera. Cap.	0.1 25V Z	半導体セラコン			01
CA701	**VH484100**	Ceramic Capacitor Array	100P 50V M	セラコンアレイ			02
CA702	**VH484100**	Ceramic Capacitor Array	100P 50V M	セラコンアレイ			02
CL101	**V2192500**	Ceramic Resonator	8.4672M CST8.46MT	セラミック振動子			01
CN101	**VK024900**	Wire Trap	52147 5P TE	ワイヤートラップ			01
CN102	**VF728300**	Wire Trap	52147 6P TE	ワイヤートラップ			01
CN501	**VK024800**	Wire Trap	52147 4P TE	ワイヤートラップ			01
CN601	**VF728300**	Wire Trap	52147 6P TE	ワイヤートラップ			01
CN702	**VJ861600**	Wire Trap	52147 16P TE	ワイヤートラップ			01
D301	**--**	Jumper Wire	0.55	ジャンパー線	(VA07890)		
D601	**VB941200**	Diode	1SS133.1SS176	ダイオード			01
IC101	**XT890A00**	IC	HG73C201FD	IC	SWX00		09
IC101	**XU947A00**	IC	HG73C205FD	IC	SWX00B		09
IC102	**XT333A00**	IC	UPC29M33HF	IC	REGULATOR +3.3V		03
IC103	**XR902A00**	IC	IC-PST591D-2	IC	RESET		02
* IC201	**XV805100**	IC	MX23C3210PC-10	IC	PROG/WAVE MASK ROM		
IC201	**VK863100**	IC Socket	DICF-42CS-E	IC ソケット			03
IC202	**VK863100**	IC Socket	DICF-42CS-E	IC ソケット			03
IC301	**XV003A00**	IC	M5M51008BFP-55LL	IC	SRAM 1M		07
IC302	**XV003A00**	IC	M5M51008BFP-55LL	IC	SRAM 1M		07
IC501	**XR998A00**	IC	UPD6379AGR	IC	D/A CONVERTER		04
IC502	**XC520A00**	IC	UPC4570C	IC	OP AMP		01
IC601	**VG181900**	Photo Coupler	PC-900V	フォトカプラ			03
J104	**--**	Jumper Wire	0.55	ジャンパー線	(VA07890)		
J105	**--**	Jumper Wire	0.55	ジャンパー線	(VA07890)		
J201	**--**	Jumper Wire	0.55	ジャンパー線	(VA07890)		
J501	**--**	Jumper Wire	0.55	ジャンパー線	(VA07890)		
J601	**--**	Jumper Wire	0.55	ジャンパー線	(VA07890)		
L101	**VB835000**	Coil	FL5R200QNT	コイル 20U			01
L101	**VF968800**	Coil	SBT-0260TF	コイル SB 60uH			01
L102	**VB835000**	Coil	FL5R200QNT	コイル 20U			01
L102	**VF968800**	Coil	SBT-0260TF	コイル SB 60uH			01
L103	**--**	Jumper Wire	0.55	ジャンパー線	(VA07890)		
L104	**--**	Jumper Wire	0.55	ジャンパー線	(VA07890)		
L105	**VB835000**	Coil	FL5R200QNT	コイル 20U			01
-109	**VB835000**	Coil	FL5R200QNT	コイル 20U			01
L105	**VF968800**	Coil	SBT-0260TF	コイル SB 60uH			01
-109	**VF968800**	Coil	SBT-0260TF	コイル SB 60uH			01
R101	**HF757470**	Carbon Resistor	47.0K 1/4 J	カーボン抵抗			01
R102	**HF755220**	Carbon Resistor	220.0 1/4 J	カーボン抵抗			01
R103	**HF757100**	Carbon Resistor	10.0K 1/4 J	カーボン抵抗			01
R104	**HF755100**	Carbon Resistor	100.0 1/4 J	カーボン抵抗			01
R108	**HF755100**	Carbon Resistor	100.0 1/4 J	カーボン抵抗			01
R110	**HF757470**	Carbon Resistor	47.0K 1/4 J	カーボン抵抗			01
R111	**HF755100**	Carbon Resistor	100.0 1/4 J	カーボン抵抗			01
R112	**HF755100**	Carbon Resistor	100.0 1/4 J	カーボン抵抗			01
R114	**HF755100**	Carbon Resistor	100.0 1/4 J	カーボン抵抗			01
R115	**HF757470**	Carbon Resistor	47.0K 1/4 J	カーボン抵抗			01
R116	**HF757470**	Carbon Resistor	47.0K 1/4 J	カーボン抵抗			01
R117	**HF758100**	Carbon Resistor	100.0K 1/4 J	カーボン抵抗			01
R118	**HF758100**	Carbon Resistor	100.0K 1/4 J	カーボン抵抗			01
R301	**HF757470**	Carbon Resistor	47.0K 1/4 J	カーボン抵抗			01
R302	**HF755100**	Carbon Resistor	100.0 1/4 J	カーボン抵抗			01
R501	**HF756220**	Carbon Resistor	2.2K 1/4 J	カーボン抵抗			01
R502	**HF756220**	Carbon Resistor	2.2K 1/4 J	カーボン抵抗			01
R503	**HF757220**	Carbon Resistor	22.0K 1/4 J	カーボン抵抗			01
-508	**HF757220**	Carbon Resistor	22.0K 1/4 J	カーボン抵抗			01

*** : New parts** **RANK : Japan only**

	REF NO.	PART NO.	DESCRIPTION		部品名	REMARKS	QTY	RANK
	R601	HF755220	Carbon Resistor	220.0 1/4 J	カーボン抵抗			01
	R604	HF755220	Carbon Resistor	220.0 1/4 J	カーボン抵抗			01
	R605	HF757100	Carbon Resistor	10.0K 1/4 J	カーボン抵抗			01
	R607	HF757220	Carbon Resistor	22.0K 1/4 J	カーボン抵抗			01
	R608	HF756270	Carbon Resistor	2.7K 1/4 J	カーボン抵抗			01
	R609	HF757470	Carbon Resistor	47.0K 1/4 J	カーボン抵抗			01
	R610	HF756100	Carbon Resistor	1.0K 1/4 J	カーボン抵抗			01
	R712	HF755220	Carbon Resistor	220.0 1/4 J	カーボン抵抗			01
	-721	HF755220	Carbon Resistor	220.0 1/4 J	カーボン抵抗			01
	RA701	VG733700	Resistor Array	EXB-Z09E 47K X 8	抵抗アレイ			01
	TR601	IC174070	Transistor	2SC1740S R.S	トランジスタ			01
	TR602	IC174070	Transistor	2SC1740S R.S	トランジスタ			01
*		V3480900	Circuit Board	INV	INVシート	(XV707C0)		
	C906	VC694800	Semiconductive Cera. Cap.	0.1 25V Z	半導体セラコン			01
	C907	UR867100	Electrolytic Cap.	10.00 50.0V	ケミコン			01
	C909	UR867100	Electrolytic Cap.	10.00 50.0V	ケミコン			01
	C910	VC694800	Semiconductive Cera. Cap.	0.1 25V Z	半導体セラコン			01
	C911	UA654470	Mylar Capacitor	0.047 50V J	マイラーコン			01
	C912	UR867100	Electrolytic Cap.	10.00 50.0V	ケミコン			01
	CN905	VK024700	Wire Trap	52147 3P TE	ワイヤートラップ			01
	CN906	VK024600	Wire Trap	52147 2P TE	ワイヤートラップ			01
	IC902	XU814A00	IC	PQ05RD11	IC	REGULATOR +5V		03
	L903	VB835000	Coil	FL5R200QNT	コイル20U			01
	R902	HF756680	Carbon Resistor	6.8K 1/4 J	カーボン抵抗			01
	R903	HF755100	Carbon Resistor	100.0 1/4 J	カーボン抵抗			01
*	T901	V3347700	Inverter Transformer	TRS-D3-323	インバータトランス			01
*	TR901	V3375500	Transistor	2SC3581	トランジスタ			
		VV583900	Circuit Board	MK-H	MK-Hシート	(VV70120)		09
		VV437800	Diode	1N4148(DO-34)	ダイオード			01
		VK025600	Wire Trap	52147 12P TE	ワイヤートラップ			01
		VK024900	Wire Trap	52147 5P TE	ワイヤートラップ			01
		VV583800	Circuit Board	MK-L	MK-Lシート	(VV70110)		09
		VV437800	Diode	1N4148(DO-34)	ダイオード			01
		VK025600	Wire Trap	52147 12P TE	ワイヤートラップ			01
		VK025100	Wire Trap	52147 7P TE	ワイヤートラップ			01
		V2404900	Circuit Board	16M KBS	MKS3シート	(XU878B0)		10
		--	Vibration-proof Tape	10X64X0.5	防振テープ	(VK34680)		
		--	Jumper Wire	0.55	ジャンパー線	(VA07890)		
	C1	FG651220	Ceramic Capacitor-SL	22P 50V J	セラコン(SL)			01
	C1	VR027400	Ceramic Capacitor-SL	22P 63V J	セラコンSL			01
	C2	FG651220	Ceramic Capacitor-SL	22P 50V J	セラコン(SL)			01
	C2	VR027400	Ceramic Capacitor-SL	22P 63V J	セラコンSL			01
	C3	UR828100	Electrolytic Cap.	100.00 10.0V	ケミコン			01
	C4	VD930900	Semiconductive Cera. Cap.	0.1 25V M	半導体セラコン			01
	C4	VM902400	Semiconductive Cera. Cap.	0.1 25V Z	半導体セラコン			01
	CA1	VP755200	Ceramic Capacitor Array	100P 50V K	セラコンアレイ			02
	CA2	VT487100	Ceramic Capacitor Array	470P X12	セラコンアレイ			02
	CL1	VN002100	Ceramic Resonator	CST8.00MTW140	セラミック振動子			02
	CL1	VQ305500	Ceramic Resonator	8.00M EFOEC8004T3	セラミック振動子			02
	CN1	VF728300	Wire Trap	52147 6P TE	ワイヤートラップ			01
	CN2	VK025600	Wire Trap	52147 12P TE	ワイヤートラップ			01
	CN3	VK025100	Wire Trap	52147 7P TE	ワイヤートラップ			01
	CN4	VK024900	Wire Trap	52147 5P TE	ワイヤートラップ			01
	IC1	XR951A00	IC	HD63B05V0F07P	IC	CPU		06
	R1	HF456470	Carbon Resistor	4.7K 1/4 J	カーボン抵抗			01
	R1	VL631400	Carbon Resistor	4.7K 1/6 J	カーボン抵抗7.5P			01
	R2	HF456470	Carbon Resistor	4.7K 1/4 J	カーボン抵抗			01
	R2	VL631400	Carbon Resistor	4.7K 1/6 J	カーボン抵抗7.5P			01
	R3	HF457470	Carbon Resistor	47.0K 1/4 J	カーボン抵抗			01
	R3	VL632600	Carbon Resistor	47.0K 1/6 J	カーボン抵抗7.5P			01
	RA1	VH373200	Resistor Array	RGLE12X473J	抵抗アレイ			01
*		V3347500	Circuit Board	PVS	PVSシート	(XV710A0)		
	CN705	VK024900	Wire Trap	52147 5P TE	ワイヤートラップ			01
	CN804	VK024800	Wire Trap	52147 4P TE	ワイヤートラップ			01

RANK : Japan only

* New Parts (新規部品)

	REF NO.	PART NO.	DESCRIPTION		部品名	REMARKS	QTY	RANK
	CN805	**VI878200**	Cable Holder	51048 4P TE	ケーブルホルダー			01
	CN904	**VK024800**	Wire Trap	52147 4P TE	ワイヤートラップ			01
⚠	SW901	**VY980400**	Push Switch	SDDLB1 J.UC.CEE	プッシュSW	STANDBY / ON		03
	VR801	**VZ048400**	Rotary Variable Resistor	A10.0K XV0141GPVN2	二連ロータリーVR	MASTER VOLUME		02
	W0805	--	Connector Assembly	DM-VR	DM－VR線材	(V348050)		
*		**XV806A00**	Speaker	12.0cm 4ohm 3W	スピーカ			
*		**V3383300**	LCD	TYPE-B	液晶ディスプレイ			
*		**V3384700**	EL Light	NELTA3115G(A2)	ELライト			

* New Parts (新規部品)

RANK : Japan only

■ PANEL SWITCH TABLE

	PN-PDT(0)	PN-PDT(1)	PN-PDT(2)	PN-PDT(3)	PN-PDT(4)	PN-PDT(5)	PN-PDT(6)	PN-PDT(7)
PN-PAD(5)	SW11	SW36	SW09	SW25	SW21	SW06	SW07	SW08
	PRESET B/6	AUTO FILL MAIN A	PORTABLE GRAND	AUTO FILL MAIN B	OVERALL▲	SONG	FUNCTION	STYLE
PN-PAD(4)	SW03	SW28	SW01	SW18	SW29	SW14	SW15	SW16
	PRESET A/5	INTRO/ENDING	METRONOME	USER 1	OVERALL +	NUMERICAL KEYPAD +	NUMERICAL KEYPAD 0	VOICE
PN-PAD(3)	SW17	SW20	SW35	SW10	SW13	SW22	SW23	SW24
	USER 4	START/STOP	REVERB	RECORD	OVERALL▼	NUMERICAL KEYPAD 9	NUMERICAL KEYPAD 8	NUMERICAL KEYPAD -
PN-PAD(2)	-	-	-	-	-	SW46	SW47	SW48
						TOUCH	DEMO	NUMERICAL KEYPAD 1
PN-PAD(1)	SW26	SW04	SW27	-	-	SW38	SW39	SW40
	USER 2	ACMP ON/OFF	DUAL			NUMERICAL KEYPAD 3	NUMERICAL KEYPAD 2	NUMERICAL KEYPAD 4
PN-PAD(0)	SW34	SW12	SW19	SW02	SW05	SW30	SW31	SW32
	USER 3	SYNC-START	HARMONY	CHORD GUIDE	OVERALL -	NUMERICAL KEYPAD 6	NUMERICAL KEYPAD 5	NUMERICAL KEYPAD 7

■ CIRCUIT DIAGRAMS 1/2 (DM,AM/PN)

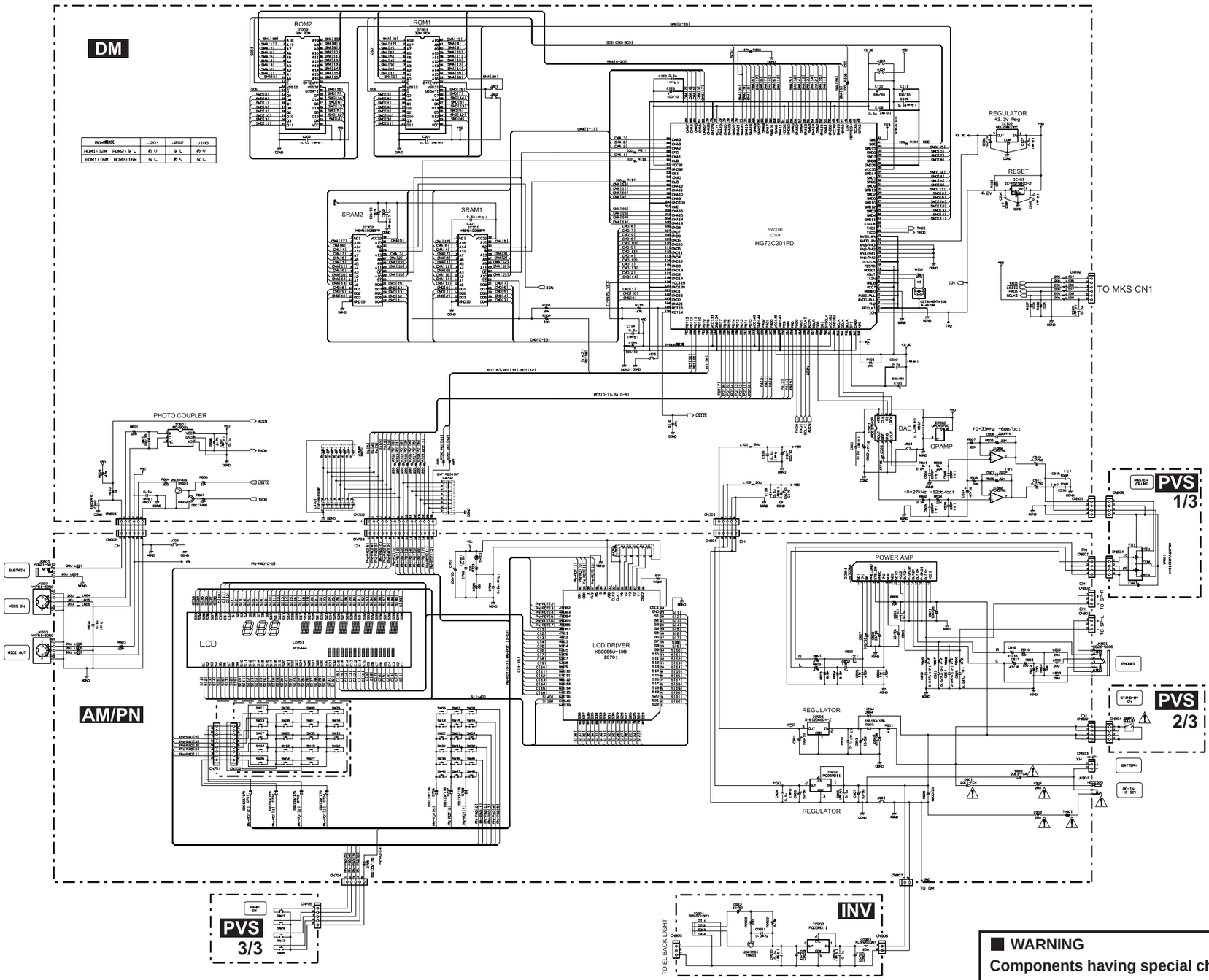

• upc29M33HF(XT333A00)
REGULATOR +3.3V

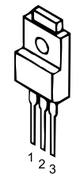

1: INPUT
2: COMMON
3: OUTPUT

•PQ05RD11(XU814A00)
REGULATOR +5V

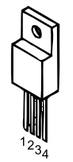

1:INPUT
2:OUTPUT
3:GND
4:ON/OFF
CONTROL

(セ) : Ceramic Capacitor
(半セ) : Semiconductive Cera. Cap.
(マ) : Mylar Capacitor

DM : 28CA2-8813191
AMPN : 28CA2-8813217
INV : 28CA2-8813190
PVS : 28CA2-8813194

■ **WARNING**
Components having special characteristics are marked ⚠ and must be replaced with parts having specification equal to those originally installed.

Note: The panel switch names can be refered the panel switch table on the left page.

Note: See parts list for details of circuit board component parts.

■ CIRCUIT DIAGRAMS 2/2 (MKS3,MK-H,MK-L)

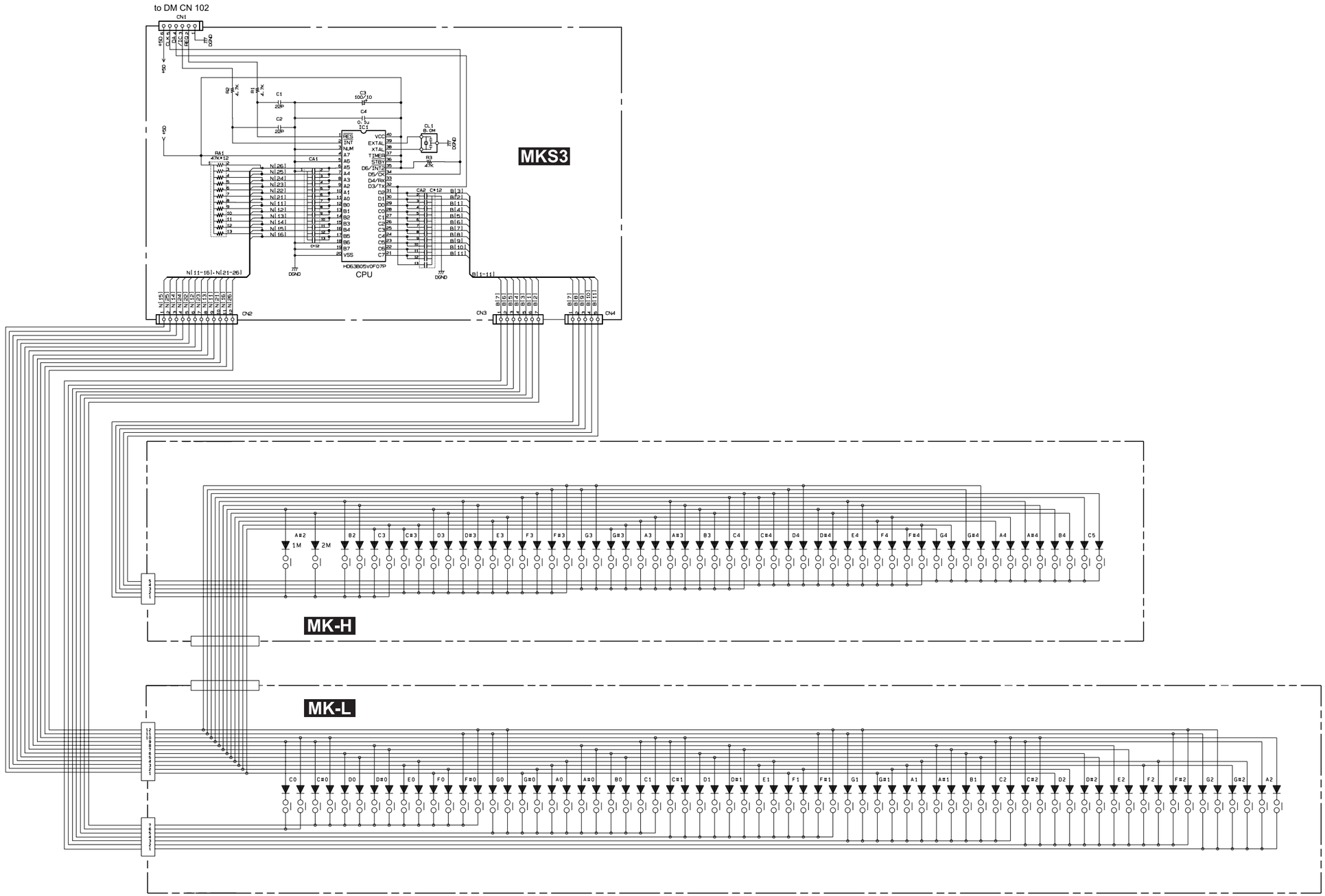

Note: See parts list for details of circuit board component parts.