PORTATONE

PSR-225

SERVICE MANUAL



■**CONTENTS**

SPECIFICATIONS 1
PANEL LAYOUT 2
CIRCUIT BOARD LAYOUT 3
BLOCK DIAGRAM 4
DISASSEMBLY PROCEDURE 5
LSI PIN DESCRIPTION 10
IC BLOCK DIAGRAM 12
CIRCUIT BOARDS 13
TEST PROGRAM & INITIALIZE 15/17
CONNECTING CABLES 20/21
MIDI IMPLEMENTATION CHART 22
PARTS LIST
PANEL SWITCH TABLE
OVERALL CIRCUIT DIAGRAM

PK 001611

YAMAHA

HAMAMATSU,JAPAN

IMPORTANT NOTICE

This manual has been provided for the use of authorized Yamaha Retailers and their service personnel. It has been assumed that basic service procedures inherent to the industry, and more specifically Yamaha Products, are already known and understood by the users, and have therefore not been restated.

WARNING: Failure to follow appropriate service and safety procedures when servicing this product may result in personal injury, destruction of expensive components and failure of the product to per form as specified. For these reasons, we advise all Yamaha product owners that all service required should be performed by an authorized Yamaha Retailer or the appointed service repre sentative.

IMPORTANT: This presentation or sale of this manual to any individual or firm does not constitute authorization, certification, recognition of any applicable technical capabilities, or establish a principal-agent relationship of any form.

The data provided is believed to be accurate and applicable to the unit(s) indicated on the cover. The research engineering, and service departments of Yamaha are continually striving to improve Yamaha products. Modifications are, therefor, inevitable exist, please contact the distributor's Service Division.

WARNING: Static discharges can destroy expensive components. Discharge any static electricity you body may have accumulated by grounding yourself to the ground buss in the unit (heavy gauge black wires connect to this buss).

IMPORTANT: Turn the unit OFF during disassembly and parts replacement. Recheck all work before you apply power to the unit.

WARNING: CHEMICAL CONTENT NOTICE!

The solder used in the production of this product contains LEAD. In addition, other electrical / electronic and / or plastic (where applicable) components may also contain traces of chemicals found by the California Health and Welfare Agency (and possibly other entities) to cause cancer and / or birth defects or other reproductive harm.

DO NOT PLACE SOLDER, ELECTRICAL / ELECTRONIC OR PLASTIC COMPONENTS IN YOUR MOUTH FOR ANY REASON WHAT SO EVER!

Avoid prolonged, unprotected contact between solder and your skin! When soldering, do not inhale solder fumes or expose eyes to solder / flux vapor!

If you come in contact with solder or components located inside the enclosure of this product, wash your hands before handling food.

■ WARNING

Components having special characteristics are marked ⚠ and must be replaced with parts having specification equal to those originally installed.

⚠ 印の商品は、安全を維持するために重要な部品です。交換する場合は、安全のため必ず指定の部品をご使用下さい。

SPECIFICATIONS

Keyboards
- 61 standard-size keys (C1 - C6), with Touch Response and Dynamic Filter.

Display
- Large multi-function LCD display

Setup
- STAND BY/ON
- MASTER VOLUME : MIN - MAX

Panel Controls
- OVERALL (st, +, -), FUNCTION, SONG, VOICE, STYLE, PORTABLE GRAND, METRONOME, [0]-[9], [+](YES/FWD), [-](NO/BWD), TOUCH

Demo Song
- 3 songs

Voice
- 100 panel voices + 10 Drum Kits + 128 GM Voices
- Polyphony : 32
- Voice Set
- Dual Voice Mode
- Split Voice Mode

Auto Accompaniment
- 100 styles
- Accompaniment Control : ACMP ON/OFF, SYNC-START, START/STOP, INTRO/ENDING, MAIN A/B(AUTO FILL)
- Beat Indicator
- Fingering : Multi fingering
- Accompaniment Volume

Yamaha Educational Suite
- Chord Guide : Dictionary, Smart Chord, EZ Chord

One Touch Setting
- Preset A and B (for each style)
- User (4 Setups x 4 Banks)

Overall controls
- Tempo
- Transpose
- Tuning
- Accompaniment Volume
- Song Volume
- Metronome Volume

Effects
- Reverb : 8 types
- Chorus : 4 types
- DSP : 33 types
- Harmony : 26 types

Song
- 3 Preset Songs (Demo) + 3 User Songs
- Song Clear

Recording
- Song
  - User Song : 3 Songs
  - Real Time Recording/Step Recording
  - Recording Tracks : 1, 2, 3, 4, 5, 6/CHORD
- EZ Chord
  - 8 Banks + Bank Chain
- OTS (One Touch Setting)
  - User : 4 Setups x 4 Banks

MIDI
- Transmit Settings
- Receive Settings
- Local Control
- Clock
- Bulk Send/Receive
- Initial Send

Auxiliary jacks
- PHONES/AUX OUT, DC IN 10-12V, MIDI IN/OUT, FOOTSWITCH

Amplifier
- 3.0W + 3.0W

Speakers
- 12cm x 2

Power Consumption
- 13 W (when using PA-3B power adaptor)

Power Supply
- Adaptor : Yamaha PA-3B AC power adaptor
- Batteries : Six ˝D˝ size, SUM-1, R-20 or equivalent batteries

Dimensions (W x D x H)
- 933 x 370 x 129 mm (36-3/4" x 14-5/8" x 5-1/6")

Weight
- 5.5 kg (12.1 lbs.)

Supplied Accessories
- Music Stand
- Owner's Manual

Optional Accessories
- Headphones : HPE-150
- AC power adaptor : PA-3B
- Footswitch : FC4, FC5
- Keyboard stand : L-2L, L-2C

Output level

Refer to the TEST PROGRAM section of this manual.

■ CIRCUIT BOARD LAYOUT & WIRING

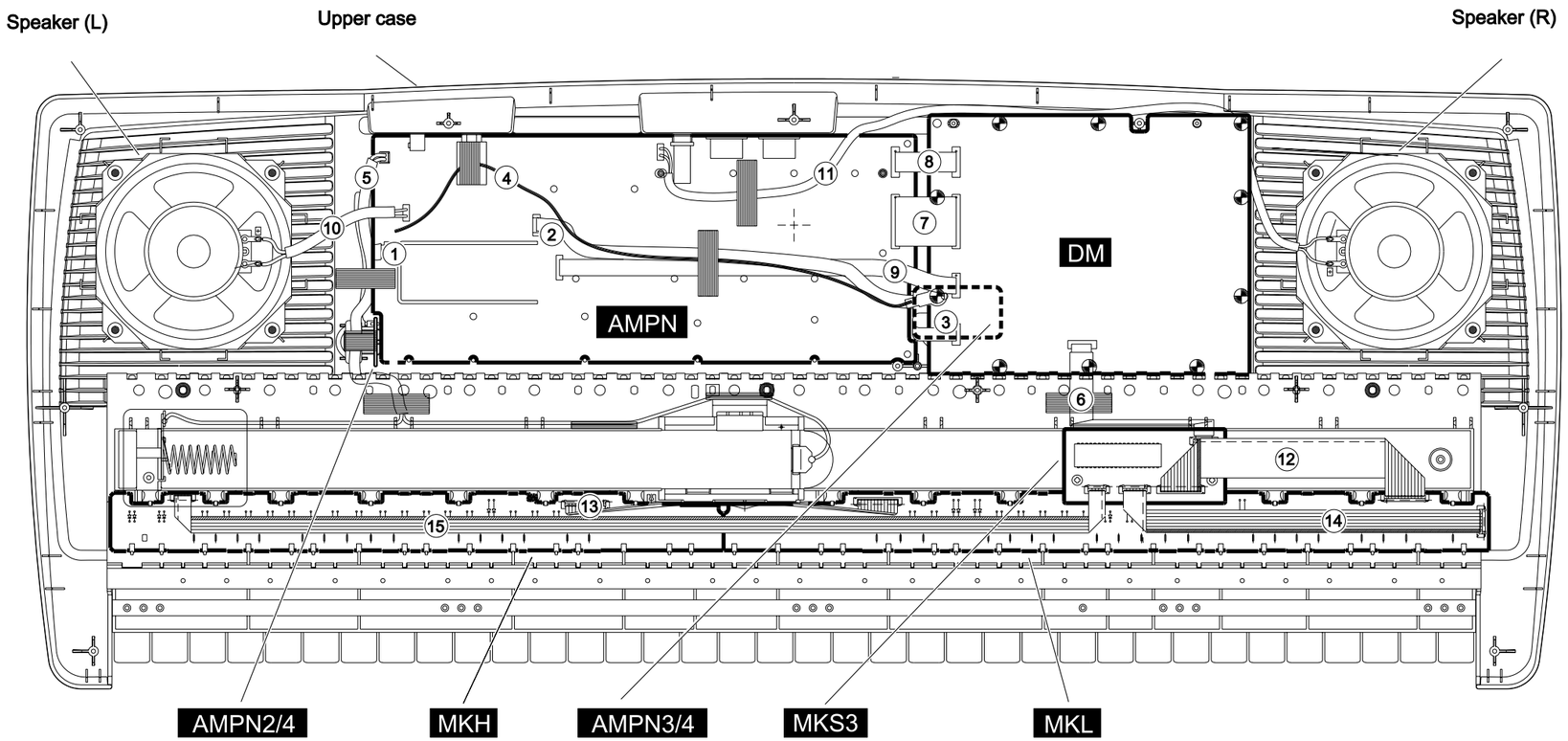

REF. NO.	DESTINATION		CONNECTOR ASSEMBLY	REMARKS	PART NO.	WIRE NO.
1	AMPN-CN902	AMPN-CN904	PSW	4P/L180	V221360	(W902)
2	AMPN-CN801	AMPN-CN804	AM-VR	4P/L280	V221380	(W901)
3	AMPN-CN805	DM-CN501	DM-VR	4P/L120	V221430	(W805)
4	AMPN-GND	EARTH	GND	1P/380	V251240	(W903)
5	AMPN-CN903	BATTERY	BATT	2P/L380,510	V221480	
6	MKS3-CN1	DM-CN102	DM-MSK	6P/220	V221440	
7	AMPN-CN703	DM-CN702	PN-SW	16P/L120	V221410	(W703)
8	AMPN-CN602	DM-CN601	MIDI	6P/L120	V255850	(W602)
9	AMPN-CN901	DM-CN101	VDD	5P/L280	V221390	
10	AMPN-CN802	SPEAKER (L)	SP-L	2P/150	V221490	(W802)
11	AMPN-CN803	SPEAKER (R)	SP-R	2P/550	V221500	(W803)
12	MKS3-CN2	MK-L	160d	12P/190	VV58310	
13	MK-H	MK-L	160e	12P/215	VV58360	
14	MKS3-CN3	MK-L	160f	7P/250	VV58350	
15	MKS3-CN4	MK-H	160g	5P/L615	VV58370	

DISASSEMBLY PROCEDURE

1 Lower Case Assembly

1-1 Remove the battery cover assembly. (Fig. 1)

1-2 Remove the fourteen (14) screws marked [300] and the two (2) screws marked [310]. Then the lower case assembly can be removed.

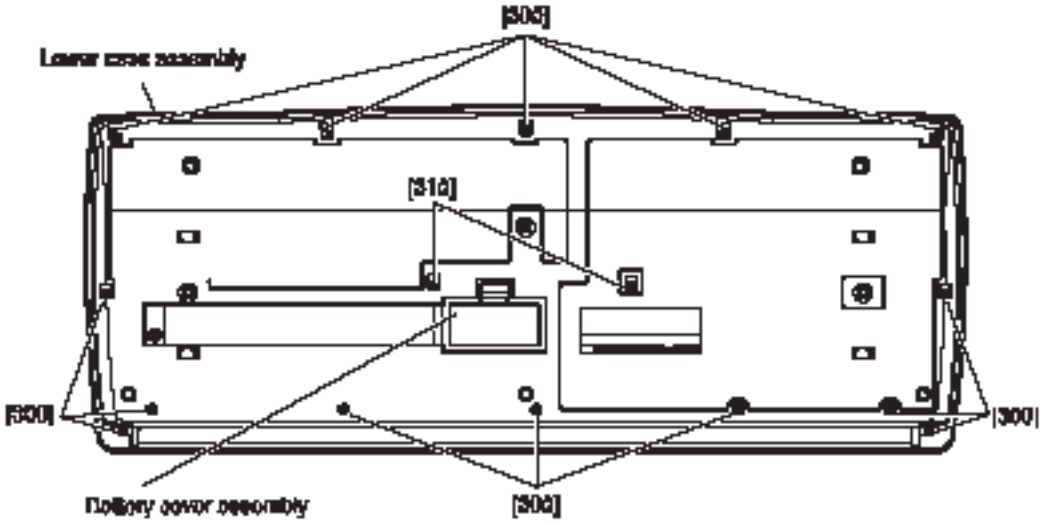

[300]: Bind Head Tapping Screw-P 3.0X8 MFZN2Y (EP600300)
[310]: Bind Head Tapping Screw-P 3.0X25 MFZN2Y (VK228100)

(Fig.1)

2 DM Circuit Board

2-1 Remove the lower case assembly. (See procedure 1)

2-2 Remove the four (4) screws marked [320]. Then the DM circuit board with the shild box can be removed. (Fig. 2)

2-3 Remove the ten (10) screws marked [290]. Then the DM circuit board can be removed. (Fig. 2)

3 Keyboard Assembly

3-1 Remove the lower case assembly. (See procedure 1)

3-2 Remove the three (3) screws marked [310]. Then the keyboard assembly can be removed. (Fig. 2)

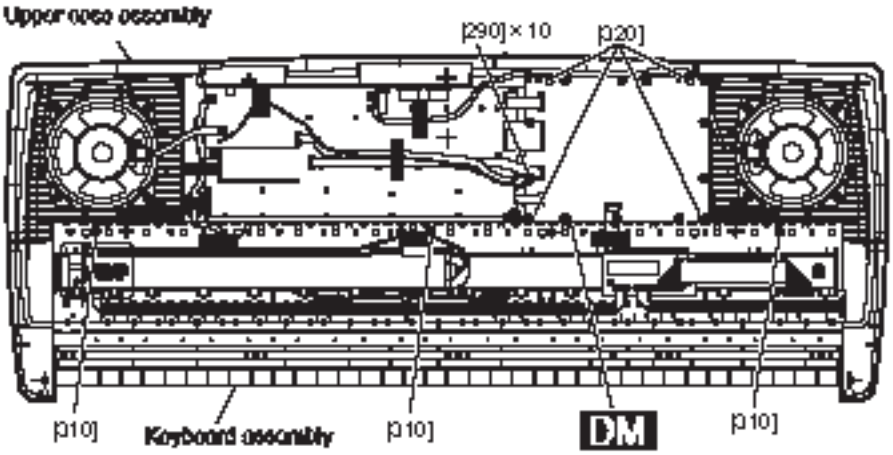

[290]: Bind Head Tapping Screw-P 3.0X8 MFZN2Y (EP600250)
[310]: Bind Head Tapping Screw-P 3.0X25 MFZN2Y (VK228100)
[320]: Bind Head Tapping Screw-P 3.0X8 MFZN2Y (EP600280)

(Fig. 2)

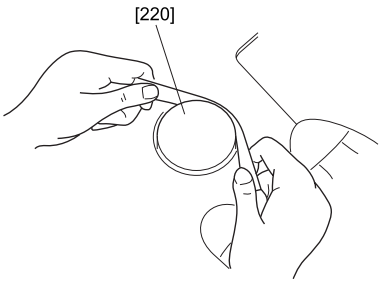

(Fig.3)

4 AMPN 3/4 Circuit Board

4-1 Remove the MASTER VOLUME knob on the control panel. (See Fig. 3)

4-2 Remove the lower case assembly. (See procedure 1)

4-3 Remove the DM circuit board with the shield box. (See procedure 2)

4-4 Remove the three (3) screws marked [320A]. Then the AMPN 3/4 circuit board can be removed. (Fig. 4)

5 AMPN 2/4 Circuit Board

5-1 Remove the lower caseassembly. (See procedure 1)

5-2 Remove the two (2) screws marked [320B]. Then the AMPN 2/3 circuit board with the knob can be removed. (Fig. 4)

5-3 Pull off the knob from the AMPN 2/4 circuit board.

6 AMPN 1/4 Circuit Board

6-1 Remove the lower case assembly. (See procedure 1)

6-2 Remove the DM circuit board with the shield box. (See procedure 2)

6-3 Remove the AMPN 3/4 circuit board. (See procedure 4)

6-4 Remove the AMPN 2/4 circuit board. (See procedure 5)

6-5 Remove the twenty-five (25) screws marked [320C] . Then the AMPN 1/4 circuit board can be removed. (Fig. 4)

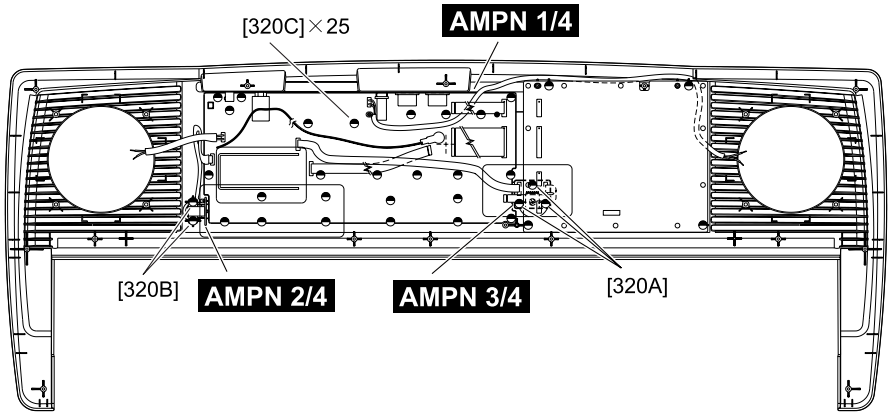

[320]: Bind Head Tapping Screw-P 3.0X8 MFZN2Y (EP600280)
[330]: Bind Head Tapping Screw-P 4.0X8 MFZN2BL (VB931600)

(Fig.4)

7 LCD

7-1 Remove the lower case assembly. (See procedure 1)

7-2 Remove the DM circuit board. (See procedure 2)

7-3 Remove the AMPN 3/4 circuit board. (See procedure 4)

7-4 Remove the AMPN 2/4 circuit board. (See procedure 5)

7-5 Remove the AMPN 1/4circuit board. (See procedure 6)

7-6 Remove the two rubber contacts not to touch the conductive surface. Then the LCD can be removed. (Fig. 5)

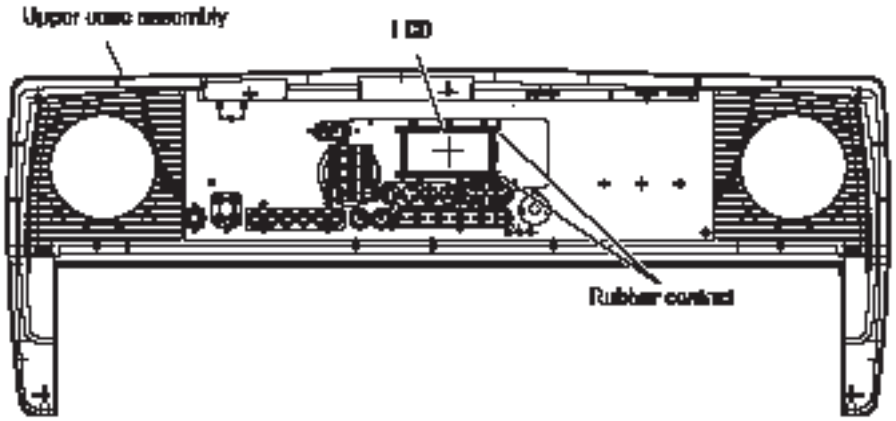

(Fig.5)

8 Speakers

8-1 Remove the lower case assembly. (See procedure 1)

8-3 Remove the eight (8) screws marked [330]. Then the right and left speakers can be removed. (Fig. 6)

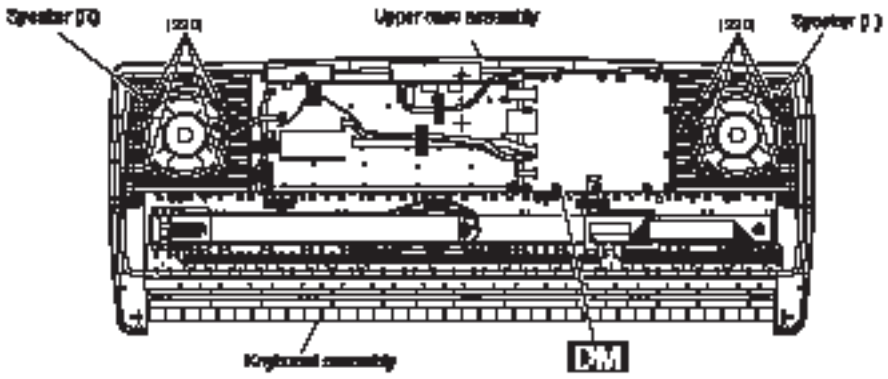

[330]: Bind Head Tapping Screw-P 4.0X8 MFZN2BL (VB931600)

(Fig. 6)

9 Disassembling the keyboard assembly

9-1 Remove the keyboard assembly. (See procedure 1)

9-2 Remove the two (2) screws marked [30]. Then the MKS3 circuit board can be removed. (Fig. 7)

9-3 Remove the MK circuit board while pressing the fifteen (15) hooks (A) inward, and then remove the rubber contact. (Fig. 8)

9-4 Remove the twenty-one (21) screws marked[140], then the remove the black keys from the lower notes. Afterward, remove the white keys DFA and C' and then remove the white keys CEGB from the higher notes. At this time, lift the keys from the front and slide them towards you. The keys can be removed from the assembly. (Fig. 9)

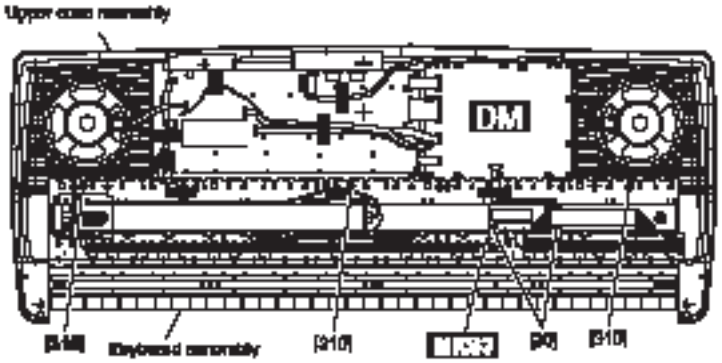

[30]: Bind Head Tapping Screw-P 3.0X8 MFZN2Y (EP600280)

[310]: Bind Head Tapping Screw-P 3.0X25 MFZN2Y (VK228100)

(Fig. 7)

10 Assembling the keyboard assembly

10-1 Install the white keys CEGB from the lower notes, and then DFA keys and C' key. Afterwards install the back keys from the higher notes, and tighten the twenty-one (21) screws marked [140]. (Fig. 9)

10-2 Install the rubber contacts in the assembly while pressing the keys as shown in Fig.10. Check that the rubber contact has been firmly placed into position in the area indicated by the arrow in Fig.11. (Fig.10,11 and 12)

* When fitting the rubber contacts, raise both ends of the frame so that keys do not push the rubber contact up. Install the MK circuit board in the assembly so that the hooks (B) hold it as shown in Fig.11.

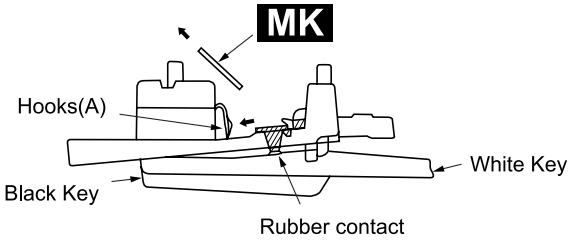

(Fig. 8)

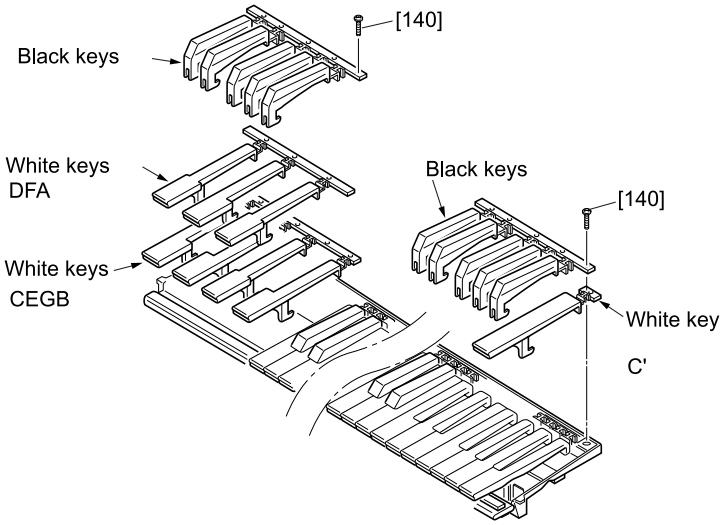

[140]: Bind Head Tapping Screw-P 3.0X16 MFZN2BL (VB205200)
[140]: Bind Head Tapping Screw-P 3.0X16 MFZN2B (VS756700)

(Fig. 9)

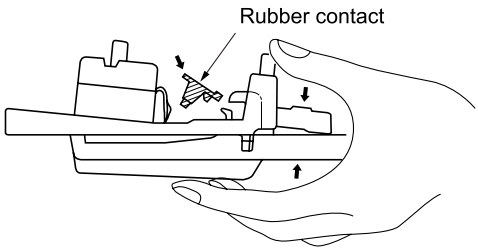

(Fig. 10)

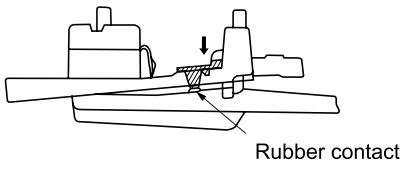

(Fig. 11)

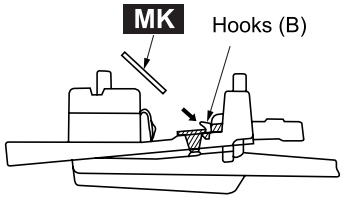

(Fig. 12)

■ LSI PIN DESCRIPTION

KS0076BQ-00 (XR793A00) **LCD DRIVER**

KS0066U-10B (XV226A00) **LCD DRIVER**

PIN NO.	NAME	I/O	FUNCTION	PIN NO.	NAME	I/O	FUNCTION
1	S22	O		41	DB2	I/O	
2	S21	O		42	DB3	I/O	
3	S20	O		43	DB4	I/O	Data interface
4	S19	O		44	DB5	I/O	
5	S18	O		45	DB6	I/O	
6	S17	O		46	DB7	I/O	
7	S16	O		47	C1	O	
8	S15	O		48	C2	O	
9	S14	O		49	C3	O	
10	S13	O		50	C4	O	
11	S12	O	Segment signal output for LCD	51	C5	O	
12	S11	O	driving	52	C6	O	
13	S10	O		53	C7	O	
14	S9	O		54	C8	O	Common signal output for LCD
15	S8	O		55	C9	O	driving
16	S7	O		56	C10	O	
17	S6	O		57	C11	O	
18	S5	O		58	C12	O	
19	S4	O		59	C13	O	
20	S3	O		60	C14	O	
21	S2	O		61	C15	O	
22	S1	O		62	C16	O	
23	Vss		Ground	63	S40	O	
24	OSC1	I	Oscillator	64	S39	O	
25	OSC2	O	Oscillator	65	S38	O	
26	V1			66	S37	O	
27	V2			67	S36	O	
28	V3		Power supply	68	S35	O	
29	V4			69	S34	O	
30	V5			70	S33	O	
31	CLK1	O	Data latch clock	71	S32	O	Segment signal output for LCD
32	CLK2	O	Data shift clock	72	S31	O	driving
33	Vdd		Power supply (+5 V)	73	S30	O	
34	M	O	Altamated signal for LCD driver outout	74	S29	O	
35	D	O	Display data interface	75	S28	O	
36	RS	I		76	S27	O	
37	R/W	I	Read/write	77	S26	O	
38	E	I	Enable	78	S25	O	
39	DB0	I/O	Data interface	79	S24	O	
40	DB1	I/O	Data interface	80	S23	O	

HD63B05V0F07P (XR951A00) **CPU**

PIN NO.	NAME	I/O	FUNCTION	PIN NO.	NAME	I/O	FUNCTION
1	/RES	I	Reset	21	C7	I/O	
2	/INT	I	Interrupt request	22	C6	I/O	
3	NUM	I	Non-maskable interrupt	23	C5	I/O	
4	A7	I/O		24	C4	I/O	Port C
5	A6	I/O		25	C3	I/O	
6	A5	I/O		26	C2	I/O	
7	A4	I/O	Port A	27	C1	I/O	
8	A3	I/O		28	C0	I/O	
9	A2	I/O		29	D0	I/O	
10	A1	I/O		30	D1	I/O	Port D
11	A0	I/O		31	D2	I/O	
12	B0	I/O		32	D3/TX	O	(Serial data output)
13	B1	I/O		33	D4/RX	I	(Serial data input)
14	B2	I/O		34	D5//CK	O	(Clock for serial operation)
15	B3	I/O	Port B	35	D6//INT2	I	(Interrupt request 2)
16	B4	I/O		36	/STBY	I	(Standby mode signal)
17	B5	I/O		37	TIMER	I	Timer
18	B6	I/O		38	XTAL	O	Clock
19	B7	I/O		39	EXTAL	I	
20	VSS		Ground	40	VCC		Power supply

● **HG73C201FD** (XT890A00) SWX00 **TONE GENERATOR**

PIN NO.	NAME	I/O	FUNCTION	PIN NO.	NAME	I/O	FUNCTION
1	ICN	I	Initial clear	85	CMA3	O	Program address bus
2	RFCLKI	I	PLL Clock	86	CMA8	O	Program address bus
3	TM2	I	PLL Control	87	CMA2	O	Program address bus
4	AVDD_PLL		Power supply	88	CRD	O	read signal
5	AVSS_PLL		Ground	89	CMA1	O	Program address bus
6	MODE0	I	SWX dual mode	90	CUB	O	high byte effective signal
7	VCC7		Power supply	91	VCC91		Power supply
8	GND8		Ground	92	GHND92		Ground
9	XIN	I	crystal oscillator	93	CS1	O	CS signal
10	XOUT	O	crystal oscillator	94	CMA0	O	Program address bus
11	MODE1	I	SWX separate mode	95	CLB	O	low byte effective signal
12	TEST0	I	TEST pin	96	CMA12	O	Program address bus
13	TESTON	I	TEST pin	97	CMA11	O	Program address bus
14	AN0-P40	I	A/D converter	98	CMA10	O	Program address bus
15	AN1-P41	I	A/D converter	99	CMA9	O	Program address bus
16	AN2-P42	I	A/D converter	100	GND100		Ground
17	AN3-P43	I	A/D converter	101	CWE	O	write signal
18	AVDD_AN		Power supply	102	CMA16	O	Program address bus
19	AVSS_AN		Ground	103	CMA15	O	Program address bus
20	TXD0	O	for MIDI or TO-HOST	104	CMA14	O	Program address bus
21	TXD1	O	for MIDI	105	CMA13	O	Program address bus
22	EXCLK	I	Crystal oscillator	106	CMD8	I/O	Program memory Data bus
23	SMD11	I/O	Wave memory data bus	107	CMD7	I/O	Program memory Data bus
24	SMD4	I/O	Wave memory data bus	108	CMD9	I/O	Program memory Data bus
25	SMD3	I/O	Wave memory data bus	109	CMD6	I/O	Program memory Data bus
26	SMD12	I/O	Wave memory data bus	110	CMD10	I/O	Program memory Data bus
27	SMD10	I/O	Wave memory data bus	111	CMD5	I/O	Program memory Data bus
28	SMD5	I/O	Wave memory data bus	112	CMD11	I/O	Program memory Data bus
29	SMD2	I/O	Wave memory data bus	113	CMD4	I/O	Program memory Data bus
30	SMD13	I/O	Wave memory data bus	114	CMD12	I/O	Program memory Data bus
31	SMD9	I/O	Wave memory data bus	115	CMD3	I/O	Program memory Data bus
32	SMD6	I/O	Wave memory data bus	116	CMD13	I/O	Program memory Data bus
33	SMD1	I/O	Wave memory data bus	117	CMD2	I/O	Program memory Data bus
34	SMD14	I/O	Wave memory data bus	118	CMD14	I/O	Program memory Data bus
35	VCC35		Power supply	119	VCC119		Power supply
36	GND36		Ground	120	GND115		Ground
37	SMD8	I/O	Wave memory data bus	121	CMD1	I/O	Program memory Data bus
38	SMD7	I/O	Wave memory data bus	122	CMD15	I/O	Program memory Data bus
39	SMD0	I/O	Wave memory data bus	123	CMD0	I/O	Program memory Data bus
40	SMD15	I/O	Wave memory data bus	124	CMA21	O	Program address bus
41	SOE	O	read signal	125	PDT15	I/O	SWX access data bus
42	SWE	O	write signal	126	PDT14	I/O	SWX access data bus
43	SRAS	O	RAS signal	127	PDT13	I/O	SWX access data bus
44	SCAS	O	CAS signal	128	PDT12	I/O	SWX access data bus
45	REFRESH	O	REFRESH signal	129	PDT11	I/O	SWX access data bus
46	CS0	O	CS signal	130	PDT10	I/O	SWX access data bus
47	SMA0	O	Memory address bus	131	PDT9	I/O	SWX access data bus
48	SMA16	O	Memory address bus	132	PDT8	I/O	SWX access data bus
49	VCC49		Power supply	133	VCC133		Power supply
50	GND50		Ground	134	GND134		Ground
51	SMA1	O	Memory address bus	135	PDT7	I/O	SWX access data bus
52	SMA15	O	Memory address bus	136	PDT6	I/O	SWX access data bus
53	SMA2	O	Memory address bus	137	PDT5	I/O	SWX access data bus
54	SMA14	O	Memory address bus	138	PDT4	I/O	SWX access data bus
55	SMA3	O	Memory address bus	139	PDT3	I/O	SWX access data bus
56	SMA13	O	Memory address bus	140	PDT2	I/O	SWX access data bus
57	SMA4	O	Memory address bus	141	PDT1	I/O	SWX access data bus
58	SMA12	O	Memory address bus	142	PDT0	I/O	SWX access data bus
59	SMA5	O	Memory address bus	143	VCC143		Power supply
60	GND60		Ground	144	GND144		Ground
61	VCC61		Power supply	145	PAD2	I	SWX access address bus
62	SMA11	O	Memory address bus	146	PAD1	I	SWX access address bus
63	SMA6	O	Memory address bus	147	PAD0	I	SWX access address bus
64	SMA10	O	Memory address bus	148	VCC148		Power supply
65	SMA7	O	Memory address bus	149	GND149		Ground
66	SMA9	O	Memory address bus	150	PCS	I	Chip select
67	SMA17	O	Memory address bus	151	PWR	I	write enable
68	SMA8	O	Memory address bus	152	PRD	I	read enable
69	SMA18	O	Memory address bus	153	RXD0	I	for Midi or TO-HOST
70	SMA19	O	Memory address bus	154	RXD1	I	for Midi or Key scan
71	SMA20	O	Memory address bus	155	SCLKI	I	EXT Clock
72	SMA21	O	Memory address bus	156	ADIN	I	A/D converter
73	SMA22	O	Memory address bus	157	ADLR	O	A/D converter LR clock
74	SMA23	O	Memory address bus	158	DO0	O	DAC
75	CMA20	O	Program address bus	159	DO1	O	DAC
76	CMA19	O	Program address bus	160	SYSCLK	O	1/2 clock
77	VCC77		Power supply	161	VCC161		Power supply
78	GND78	O	Ground	162	GND162		Ground
79	CMA18	O	Program address bus	163	WCLK	O	for DAC LR clock
80	CMA17	O	Program address bus	164	QCLK	O	1/12 clock
81	CMA5	O	Program address bus	165	BCLK	O	IIS-DAC clock
82	CMA6	O	Program address bus	166	SYI	I	Synch signal
83	CMA4	O	Program address bus	167	IRQ0	I	Interrupt request
84	CMA7	O	Program address bus	168	NMI	I	Interrupt request

IC BLOCK DIAGRAM

- **μPC4570C (XC520A00)**
  Dual Operational Amplifier

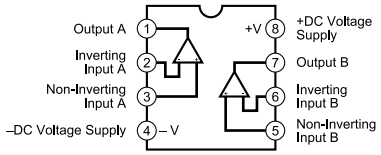

- **μPD6379A (XR998A0)**
  Dual Operational Amplifier

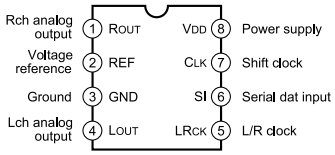

■ TEST PROGRAM & INITIALIZE

1. TEST PROGRAM

A. PREPARATION

1) AC adaptor equal to a PA3B.
2) The volume is usually moved to the use position when no volume change is required.
3) Measuing instruments:
   Frequency counter
   Level meter (with a JIS-C filter)
   Note: Use stereo plug and connect the 33 ohm load at [PHONES/AUX OUT] jack.
4) Jigs:
   Foot switch, MIDI cable

B. HOW TO ENTER THE TEST PROGRAM

While depressing the C2# ,F2 and G2# keys, turn the [STAND BY/ON] switch on.

C. PROCEEDING THROUGH THE TEST PROGRAM

The LCD will display “TEST” when entering the test program.

- To select the program number, use the [OVERALL +/-] button.
- To execute the test, press the [START/STOP] button.
- To proceed to the next test, press the [START/STOP] button again.

D. TEST PROGRAM LIST

TEST NO.	LCD (initial)	Test Functions and Judgment Criteria
1	001:Version	Displays version for ROM ROM(Program, Wave) versions are displayed alternately in the LCD.
2	002:Rom Chk1	Checks the ROM. The test result appears on the LCD.
3	003:Ram Chk1	Checks all the RAMs which are connected to the CPU. The test result appears on the LCD.
11	011:TG1 Chk	Outputs the sine wave by changing the channels in sequence from C2 to G4. After autoscaling is finished, individual keys can be played. (If playing two or more keys simulaneously, the final depressed key has priority to make a sound.)
13	013:Pit Chk	Connect the frequency counter to the [PHONE/AUX OUT] jack. Check that the 440 Hz +/- 1.76 Hz signal is output.
14	014:Output R	Connect the level meter (with a JIS-C filter) to the [PHONS/AUX OUT] jack. (33 ohm load) Set the [MASTER VOLUME] at maximum. Check output level (1kHz). Phones L: Less than -50dBm Phones R: -6.0dBm +/- 2dB
15	015:Output L	Connect the level meter (with a JIS-C filter) to the [PHONS/AUX OUT] jack. (33 ohm load) Set the [MASTER VOLUME] at maximum. Check output level (1kHz). Phones L: -6.0dBm +/- 2dB Phones R: Less than -50dBm
19	019:Noise	Connect the level meter (with a JIS-C filter) to the [PHONS/AUX OUT] jack. (33ohm load) Set the [MASTER VOLUME] at maximum. Phones L/R: Less than -80dBm
20	020:SW Chk	Check switchs on the panel. Press the switchs which is displayed on the LCD. A pre-assigned note is output when depressing the switch. The test result appears on the LCD.

20	020:SW Chk	Check switchs on the panel. Press the switchs which is displayed on the LCD. A pre-assigned note is output when depressing the switch. The test result appears on the LCD.
28	028:LCD On	Check that all LCD dots are on.
29	029:LCD Off	Check that all LCD dots are off. The LCD becomes white.
31	031:PD1 Chk	Connect the foot switch to [FOOT SWITCH] jack. Check that the C3 note is output when starting the test program. Check that the C4 note is output when pushing the pedel and the tone is turned off when releasing the pedal. The test result appears on the LCD.
37	037:MIDI Chk	After connecting the [MIDI IN] jack and [MIDI OUT] jack with a MIDI cable, execute the test. Check that the C4 note is output and the test result appears on the LCD.
41	041:ROM Chk2	Checks the ROM. The test result appears on the LCD.
42	042:RAM Chk2	Checks the RAMs which are connected to the CPU. The test result appears on the LCD.
46	046:Back Up 2	Performs the RAM back-up check. After checking that the beginning becomes NG, turn the power switch off. Enter the test program and perform the RAM back-up and check again. Check that the LCD displys OK. Note: Do not turn the [STAND BY ON] switch on by normal mode during standing by. If this should happen, RAM data will be lost.
47	047:Factory	All RAMs are initialized and set to the factory preset date when executing this test. The result appears on the LCD.
48	048:TestExit	Exit from the test program after executing this test.

2. INITIALIZE

Except for the data listed below, all PSR-225 panel settings are reset to their initial settings whenever the power is turned on. The data listed below are backed up - i.e. retained in memory - as long as an AC adaptor is connected or a set of batteries is installed.

- User Song Data
- User One Touch Setting Data
- One Touch Setting Bank Number
- EZ Chord Data
- EZ Chord Bank Number Data
- Smart Chord Number
- Metronome Volume
- Touch On/Off
- Touch Sensitivity
- Split Point
- Accompaniment Split Point
- Footswitch Assign Function

Data Initialization

All data can be initialized and restored to the factory preset condition by turning on the power while holding the highest (rightmost) white key on the keyboard. “CLr Backup” will appear briefly on the display.

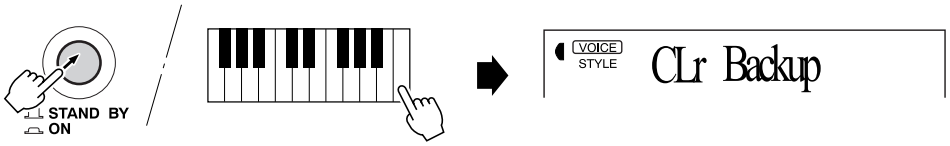

CAUTION

- All one touch setting (user) and song memory data, plus the other settings listed above, will be erased and/or changed when the data initialization procedure is carried out.
- Carrying out the data initialization procedure will usually restore normal operation if the PSR-225 freezes or begins to act erratically for any reason.

CONNECTING CABLES

By connecting your PSR-225's MIDI terminals to a personal computer, you can have access to a wide variety of music software.

When using a MIDI interface device installed in the personal computer, connect the MIDI terminals of the personal computer and the PSR-225.

Use only special MIDI cables when connecting MIDI devices.

• Connect the MIDI terminals of the PSR-225 to the MIDI terminals of the personal computer.

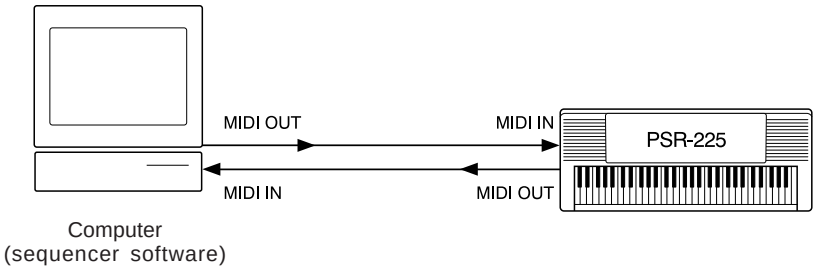

• When using a MIDI interface with a Macintosh series computer, connect the RS-422 terminal of the computer (modem or printer terminal) to the MIDI interface, as shown in the diagram below.

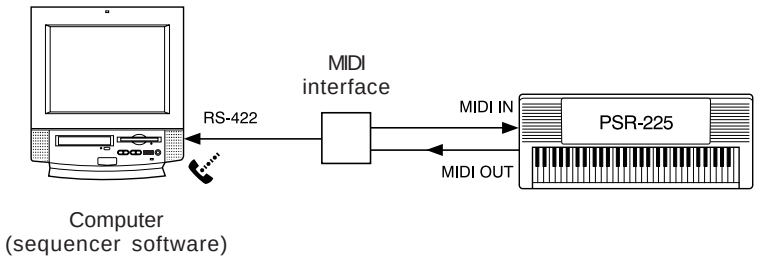

NOTE

• When using a Macintosh series computer, set the MIDI interface clock setting in the application software to match the setting of the MIDI interface you are using. For details, carefully read the owner's manual for the software you are using.

■ MIDI IMPLEMENTATION CHART

[Portable Keyboard]
Model: PSR-225

MIDI Implementation Chart

Date: 18-MAR-1998
Version: 1.0

Function	Transmitted	Recognized	Remarks
Basic Default	1 - 16	1 - 16 *1	
Channel Changed	1 - 16	1 - 16 *1	
Default	3	3	
Mode Messages	X	X	
Altered	**********	X	
Note	0 - 127	0 - 127	
Number : True voice	**********	0 - 127	
Velocity Note ON	O 9nH, v=1 - 127	O 9nH, v=1 - 127	
Note OFF	O 9nH, v=0	O 9nH, v=0 or 8nH	
After key's	X	X	
Touch Ch's	X	X	
Pitch Bender	X	O	
Control Change 0, 32	O	O	Bank Select
1	X *2	O	Modulation
7, 10	O	O	
11	X *2	O	Expression
6, 38	X *2	O	Data Entry
64	O	O	Sustain
84	X *2	O	Portamento Control
91, 93, 94	O	O	Effect Depth
96, 97	X	O	Data Inc, Dec
100, 101	X *2	O	RPN LSB, MSB
120	X	O	All Sound Off
121	X	O	Reset All Controllers
Program	O 0 - 127	O 0 - 127	
Change : True #	**********		
System Exclusive	O *3	O *3	
System : Song Position	X	X	
: Song Select	X	X	
Common : Tune	X	X	
System : Clock	O	O *4	
Real Time : Commands	O	*5 O	*5
Aux : Local ON/OFF	X	X	
: All Notes OFF	X	O (123 - 127)	
Messages : Active Sense	O	O	
: Reset	X	X	

Mode 1 : OMNI ON, POLY
Mode 2 : OMNI ON, MONO
O : Yes
Mode 3 : OMNI OFF, POLY
Mode 4 : OMNI OFF, MONO
X : No

■ BLOCK DIAGRAM

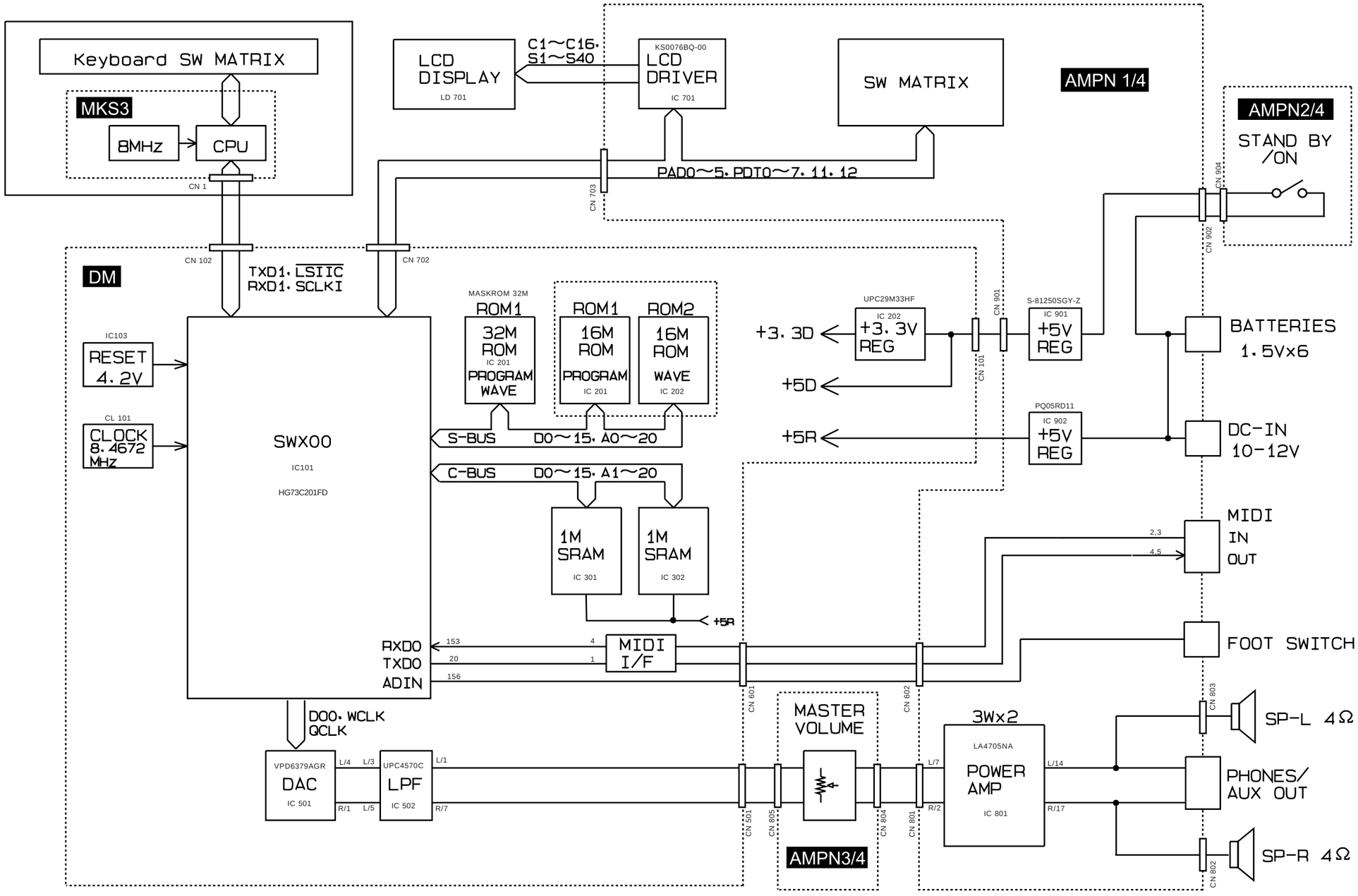

■ CIRCUIT BOARDS

- **DM Circuit Board**

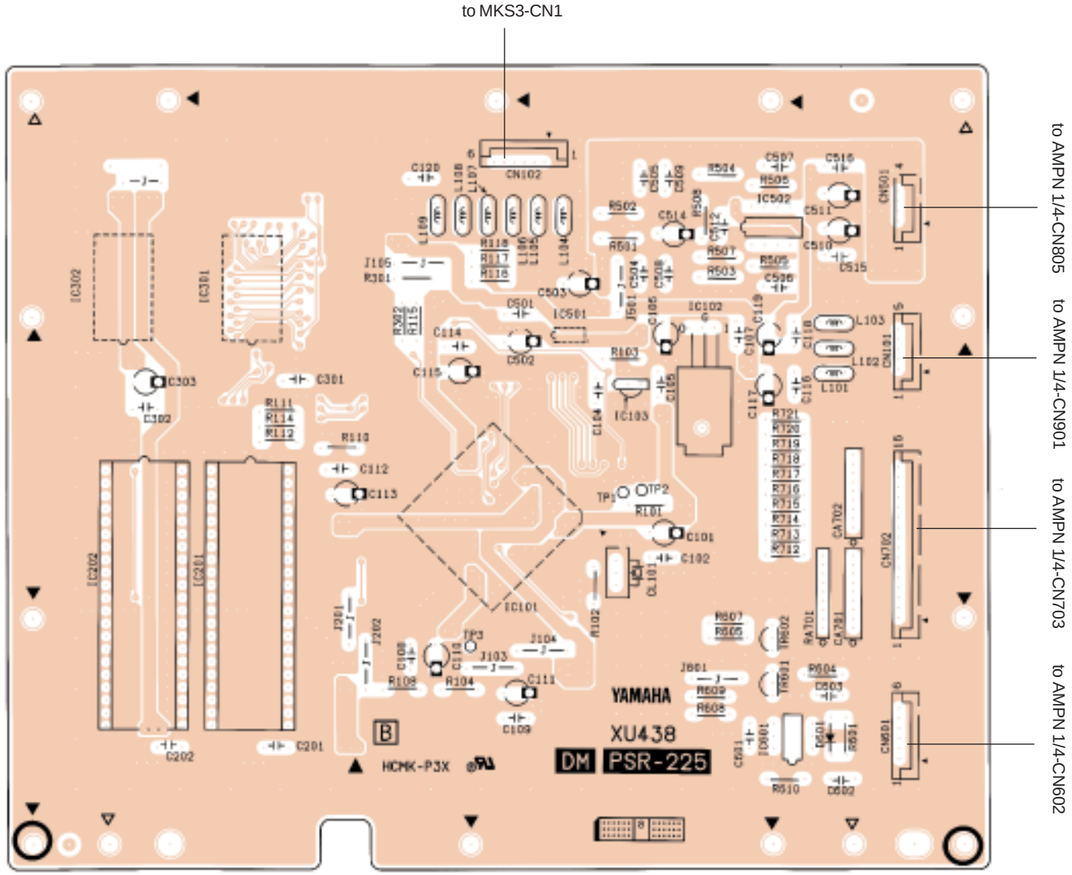

Component side

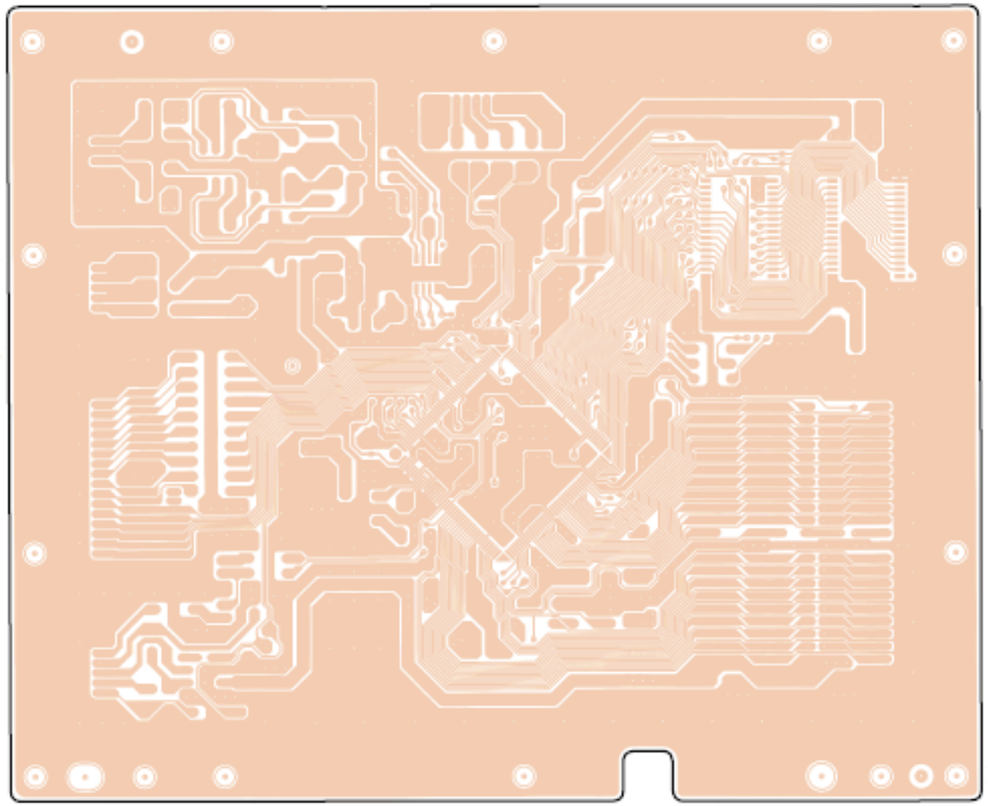

Patternside

Note: See parts list for details of circuit board component parts.

- **AMPN 1/4Circuit Board**

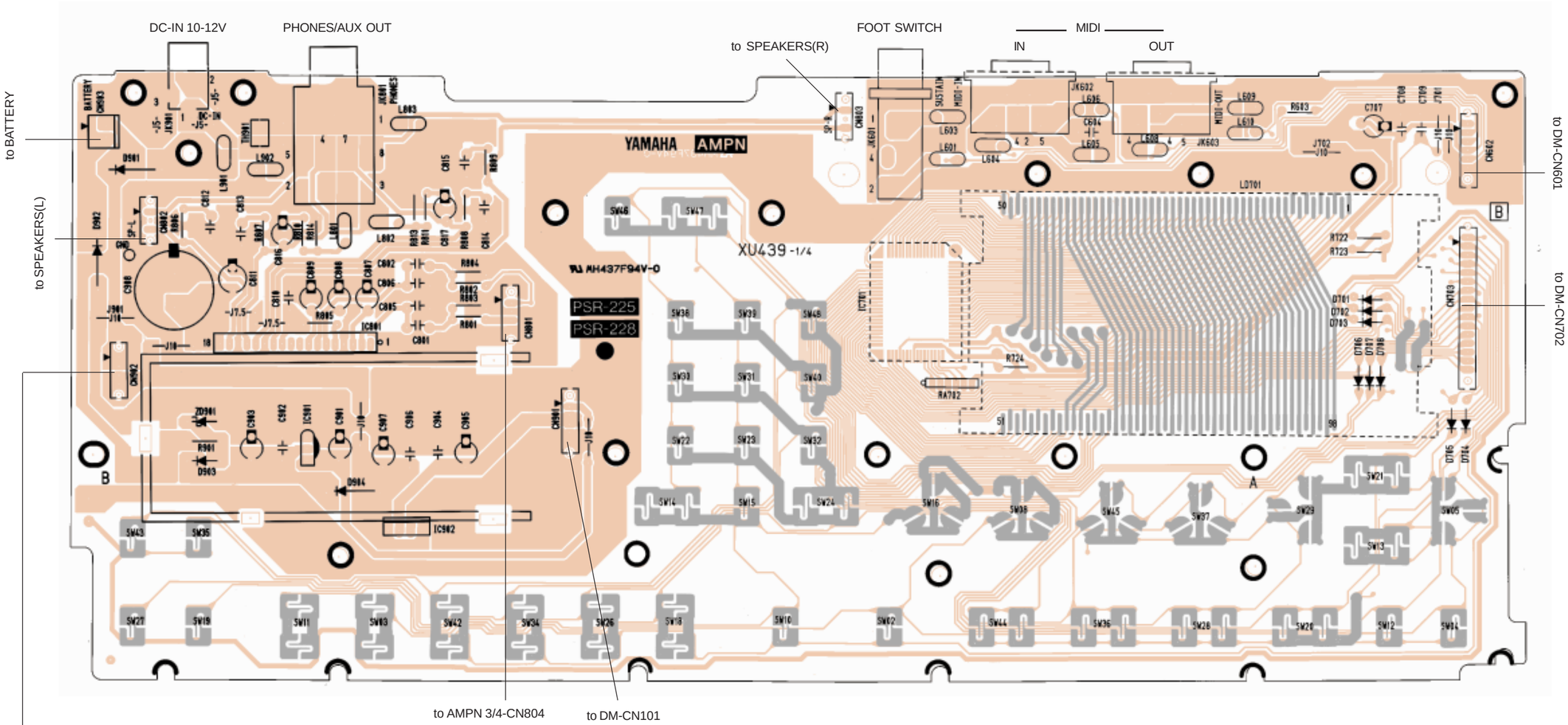

Component side

- **AMPN 2/4 Circuit Board**

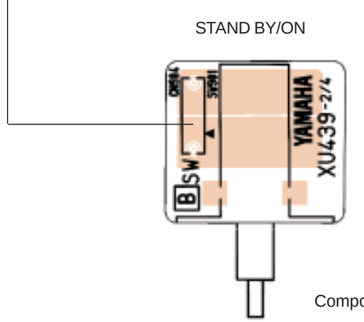

Component side

- **AMPN 3/4 Circuit Board**

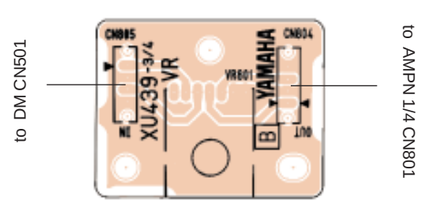

MASTER VOLUME

Component side

Note: See parts list for details of circuit board component parts.
AMPN 4/4 circuit board is not used.

AMPN:2NA-V206360 0

■ CIRCUIT DIAGRAMS 1/2 (DM,AMPN)

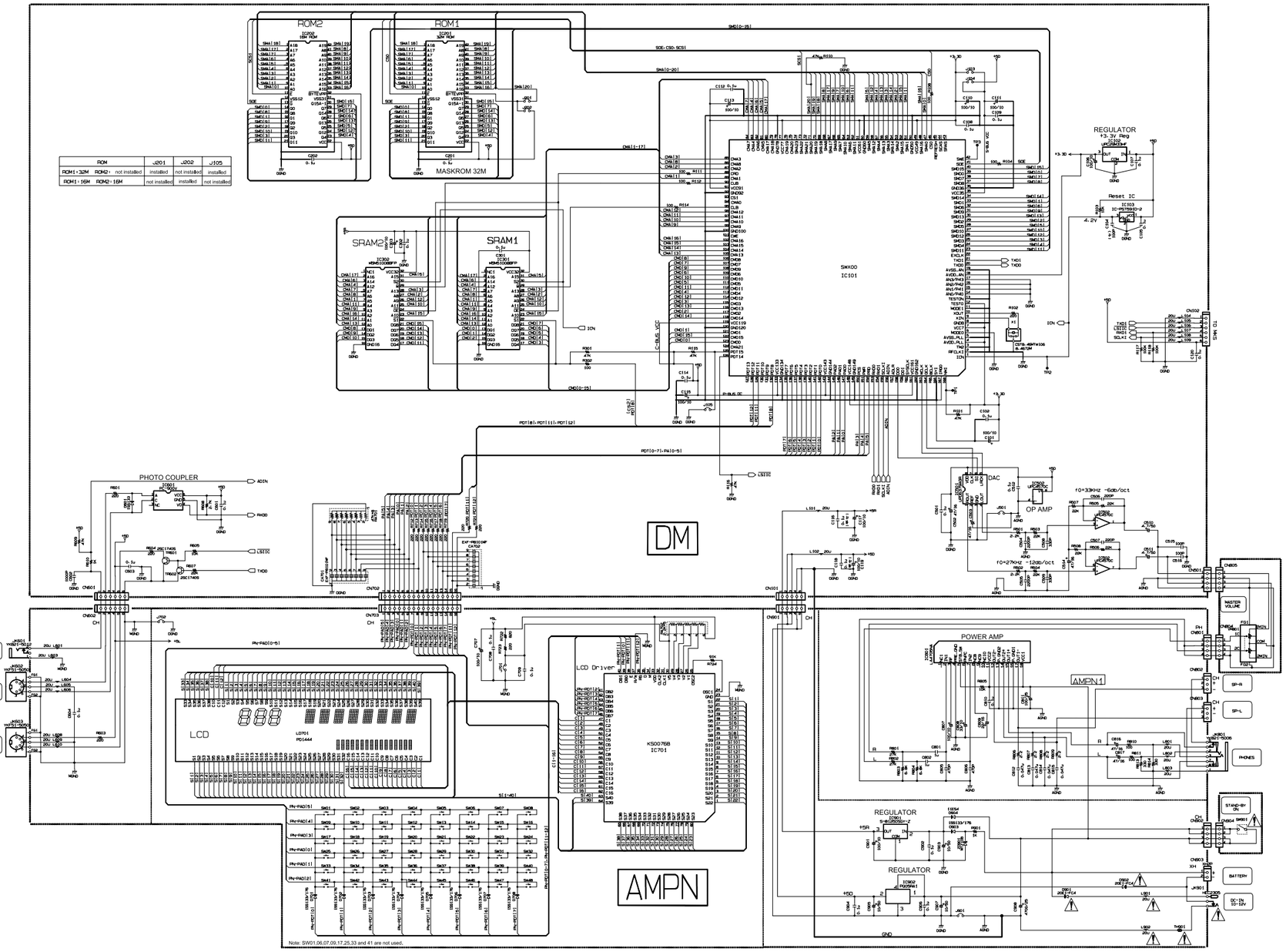

ROM	J201	J202	J105
ROM1×32M ROM2×	not installed	installed	installed
ROM1×16M ROM2×16M	not installed	installed	not installed

●PQ05RD11(XU814A00)
REGULATOR +5V

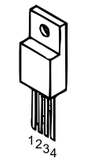

1:INPUT
2:OUTPUT
3:GND
4:ON/OFF CONTROL

• upc29M33HF(XT333A00)
REGULATOR +3.3V

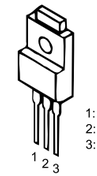

1: INPUT
2: COMMON
3: OUTPUT

2BCA2-8812658

■ **WARNING**
Components having special characteristics are marked and ⚠ must be replaced with parts having specification equal to those originally installed.

Note: See parts list for details of circuit board component parts.

C1

■ CIRCUIT DIAGRAMS 2/2 (MKS3,MK-H,MK-L)

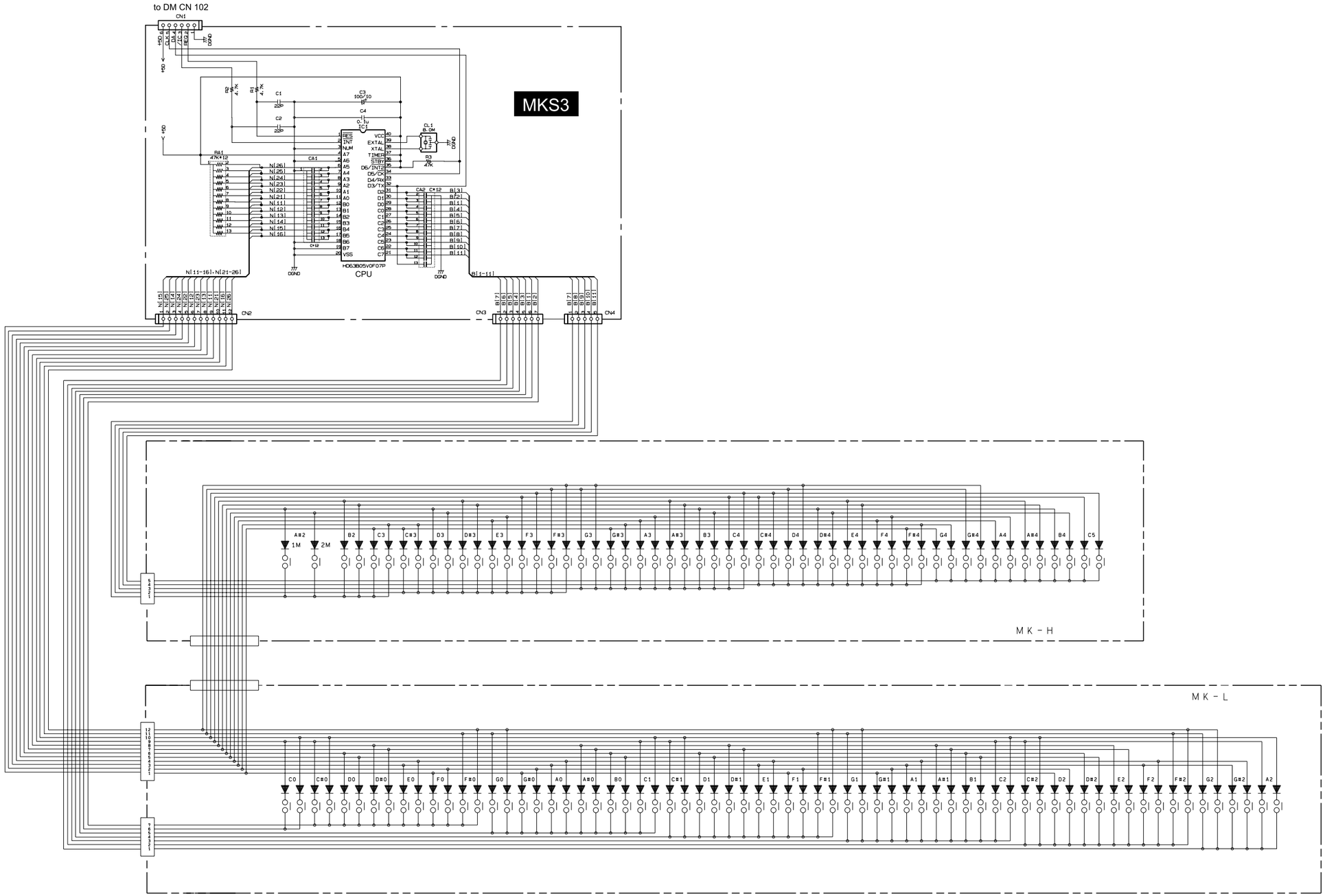

Note: See parts list for details of circuit board component parts.

PORTATONE

PSR-225

PARTS LIST

■**CONTENTS**

OVERALL ASSEMBLY 2
KEYBOARD ASSEMBLY 4
ELECTRICAL PARTS 5

Note) DESTINATION ABBREVIATIONS

J : Japanese model	A : Australian model
U : U.S. model	E : European model
C : Canadian model	D : German model
X : General model	B : British model
M : South African model	I : Indonesian model
H : North European model	

■WARNING

Components having special characteristics are marked ⚠ and must be replaced with parts having specifications equal to those originally installed.

- The numbers in "QTY" shows quantities for each unit.
- The parts with "– –" in "Part No." are not available as spare parts.

■ OVERALL ASSEMBLY

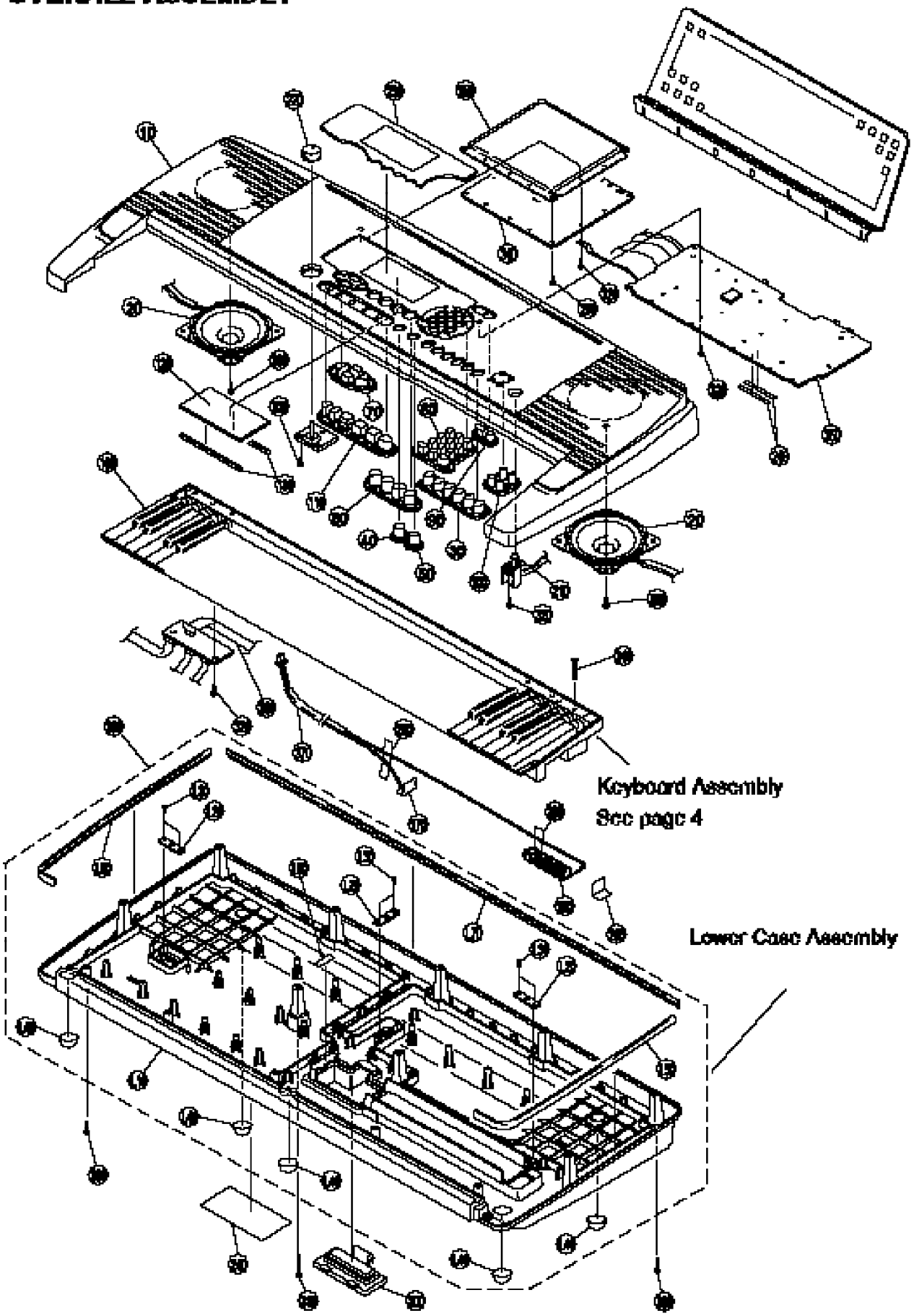

	REF NO.	PART NO.	DESCRIPTION			REMARKS	QTY	RANK
			OVERALL ASSEMBLY			PSR-225		
		--	Overall Assembly			(V221710)		
*	10	V2233100	Upper Case Assembly					
	10a	--	Upper Case			(V221900)		
	10b	VT703200	Vibration-proof Tape				2	01
	20	XN789B00	Speaker	12.0cm 4ohm 5W			2	05
	30	V2219100	Rubber Contact	A		ONE TOUCH SETTING		
*						(1,2,3,4,A,B)		
	40	V2219200	Rubber Contact	B		CORD GUIDE		
*	50	V2219300	Rubber Contact	C		RECORD		
*	60	V2219400	Rubber Contact	D		ACMP ON/OFF,SYNC-START,		
*						START/STOP,INTRO/ENDING,		
*						MAIN A,MAIN B,		
	70	V2219500	Rubber Contact	E		-,+,up,down		
	80	V2219600	Rubber Contact	F		1,2,3,4,5,6,7,8,9,-,+		
*	90	V2220000	Rubber Contact	G		PORTABLE GRAND,METRONOME		
*	100	V2220100	Rubber Contact	H		HARMONY,REVERB,DUAL,TOUCH		
*	110	V2220200	Rubber Contact	I		FUNCTION,SONG,STYLE,VOICE		
*	120	V0054000	LCD	TYPE-B-T				
*	120	V2271100	LCD	TYPE-B-R				
*	130	V2150800	Rubber Contact 98	ZEE-510			2	02
*	150	--	Shield Box	L		(V220140)		
*	160	--	Keyboard Assembly			(V238610)		
	170	VI663700	Battery Terminal (-)					
	180	VI865800	Spring Terminal					
	190	V2204500	Lower Case Assembly					
	200	VM754600	Battery Cover Assembly					
	210	VQ218800	Knob			STAND BY/ON		03
	220	VU432400	knob,V			MASTER VOLUME		01
*	230	V2171600	LCD Panel					
	240	--	Label	FE		(V223560)		
	246	--	Dust Proof Cloth	53X4X0.35		(V260360)	2	
	260	VA126100	Adhesive Tape	12X50			9	03
*	265	VJ861500	Vibration-Proof Sponge	18X25				03
	290	EP600250	Bind Head Tapping Screw-B	3.0X8 MFZN2Y			10	01
	300	EP600300	Bind Head Tapping Screw-P	3.0X12 MFZN2Y			15	01
	310	VK228100	Bind Head Tapping Screw-P	3.0X25 MFZN2Y			5	01
	320	EP600280	Bind Head Tapping Screw-P	3.0X8 MFZN2Y			34	01
	330	VB931600	Bind Head Tapping Screw-P	4.0X8 MFZN2BL			8	01
	340	V2063500	Circuit Board	DM				
	350	V2063600	Circuit board	AMPN				
	360	--	Connector Assembly			(V221440)		
	370	--	Connector Assembly			(V221480)		
			ACCESSORIES					
*		VZ239700	Music Rest					
⚠ *		VT368600	AC Adaptor	PA-3B JP		J		09
		V2221300	Japanese Guide Sheet			J		
		V2204500	Lower Case Assembly					
	L10	--	Lower Case			(V211610)		
	L20	VI104400	Plate,Stand	CH			3	
	L30	EP600280	Bind Head Tapping Screw-P	3.0X8 MFZN2Y			6	01
	L40	CB043750	Foot	BL T1.6			5	01
*	L50	--	Dust Proof Cloth	360X15X0.5		(V217840)	4	
	L60	--	Dust Proof Cloth	885X15X0.5		(V217850)		
	L70	--	Dust Proof Cloth	290X20X0.5		(V217860)		
*	L80	--	Vibration-proof Tape	12X32X0.5		(VU95430)		

*** : New parts** **RANK : Japan only**

KEYBOARD ASSEMBLY

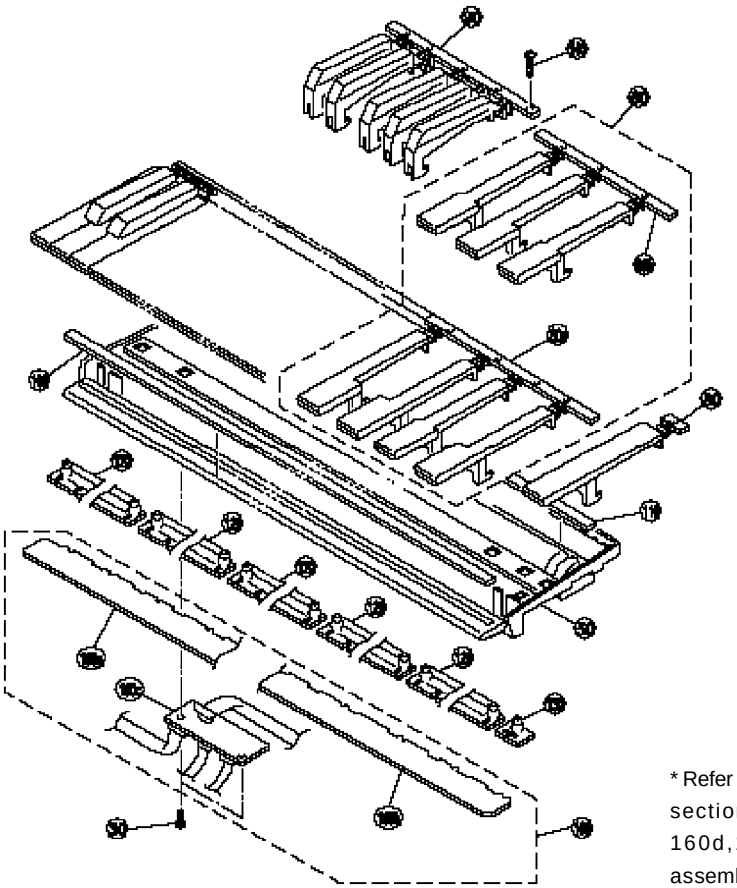

* Refer to the CIRCUIT BOARD LAYOUT section of this manual regarding 160d,160e,160f,160g connector assemblies.

	REF NO.	PART NO.	DESCRIPTION			REMARKS	QTY	RANK
			KEYBOARD ASSEMBLY			PSR-225		
*		V2386100	Keyboard Assembly					
	30	EP600280	Bind Head Tapping Screw-P	3.0X8 MFZN2Y			2	01
	30	EP630220	Bind Head Tapping Screw-P	3.0X8 MFZN2BL			2	01
	50	--	Frame	C61		(VS15380)		
	60	VH1809C0	White Key	CEGBDFA			5	03
	60a	--	White Key	CEGB			5	03
	60b	--	White Key	DFA			5	03
	80	VH181100	White Key	C'				01
	90	VH181200	Black Key				5	03
	100	VH181300	Felt					03
	110	VH181400	Rubber Sheet					01
	120	VU328400	Rubber Contact	16M OCT 2M 12KEYS			5	06
	130	VU328500	Rubber Contact	16M C' 2M 1KEY				05
	140	EP600310	Bind Head Tapping Screw-P	3.0X16 MFZN2Y			21	01
	140	VB205200	Bind Head Tapping Screw-P	3.0X16 MFZN2BL			21	01
	140	VS756700	Bind Head Tapping Screw-P	3.0X16 MFZN2B			21	01
	150	TX920280	Grease	G-31KA				10
	160	--	Circuit Board	SW (MKS3)		(V240470)		
	160a	VV583800	Circuit Board	MK-L		(XR564B0)		09
	160b	VV583900	Circuit Board	MK-H		(XR565B0)		09
*	160c	V2404900	Circuit Board	MKS3		(XU878B0)		
	160d	--	Connector Assembly	MK-A 12P		(VV58310)		
	160e	--	Connector Assembly	MK-B 12P		(VV58360)		
	160f	--	Connector Assembly	MK-C 7P		(VV58350)		
	160g	--	Connector Assembly	MK-D 5P		(VV58370)		
	160h	--	Sponge A	A 16M		(VV61890)	2	
	160i	--	Sponge B	B 16M		(VV61900)	2	
	160j	--	Filament Tape	C 12		(VV61910)		
	160k	--	Filament Tape	D 12		(VV61920)	3	

*** : New parts** **RANK : Japan only**

■ ELECTRICAL PARTS (電気部品)

	REF NO.	PART NO.	DESCRIPTION			REMARKS	QTY	RANK
			ELECTRICAL PARTS			PSR-225		
*		**V2063600**	Circuit Board	AMPN		(XU439B0)		
*		**V2063500**	Circuit Board	DM		(XU438B0)		
		VV583800	Circuit Board	MK-L		(VV70110)		09
		VV583900	Circuit Board	MK-H		(XR564B0)		09
*		**V2404900**	Circuit Board	MKS3		(XR565B0)		
*		**V2063600**	Circuit Board	AMPN		(XU439B0)		
		EP600190	Bind Head Tapping Screw-B	3.0X8 MFZN2BL				01
		--	Heat Sink	2605		(V243900)		
	CN602	**VI878400**	Cable Holder	51048 6P TE				01
	CN703	**VI879400**	Cable Holder	51048 16P TE				01
	CN801	**VI878200**	Cable Holder	51048 4P TE				01
	CN802	**VI878100**	Cable Holder	51048 3P TE				01
	CN803	**VI878100**	Cable Holder	51048 3P TE				01
	CN804	**VI878200**	Cable Holder	51048 4P TE				01
	CN805	**VI878200**	Cable Holder	51048 4P TE				01
	CN901	**VI878300**	Cable Holder	51048 5P TE				01
	CN902	**VI878200**	Cable Holder	51048 4P TE				01
	CN903	**LB918020**	Base Post Connector	XH 2P TE				01
	CN904	**VI878200**	Cable Holder	51048 4P TE				01
	C604	**VC694800**	Semiconductive Cera. Cap.	0.1000 25V Z				01
	C707	**UR828100**	Electrolytic Cap.	100.00 10.0V				01
	C708	**VC694800**	Semiconductive Cera. Cap.	0.1000 25V Z				01
	C709	**VC694800**	Semiconductive Cera. Cap.	0.1000 25V Z				01
	C801	**VT757800**	Monolithic Ceramic Cap.	1.000 25V Z				01
	C802	**VT757800**	Monolithic Ceramic Cap.	1.000 25V Z				01
	C805	**FG612470**	Ceramic Capacitor-B	470P 50V K				01
	C806	**FG612470**	Ceramic Capacitor-B	470P 50V K				01
	C807	**UR828100**	Electrolytic Cap.	100.00 10.0V				01
*	C808	**UR837330**	Electrolytic Cap.	33.00 16.0V				
	C809	**UR837220**	Electrolytic Cap.	22.00 16.0V				01
	C810	**VC694800**	Semiconductive Cera. Cap.	0.1000 25V Z				01
	C811	**UR848100**	Electrolytic Cap.	100.00 25.0V				01
	C812	**UA654470**	Mylar Capacitor	0.0470 50V J				01
	-815	**UA654470**	Mylar Capacitor	0.0470 50V J				01
	C816	**UR837470**	Electrolytic Cap.	47.00 16.0V				01
	C817	**UR837470**	Electrolytic Cap.	47.00 16.0V				01
	C901	**UR828100**	Electrolytic Cap.	100.00 10.0V				01
	C902	**VC694800**	Semiconductive Cera. Cap.	0.1000 25V Z				01
	C903	**UR867100**	Electrolytic Cap.	10.00 50.0V				01
	C904	**VC694800**	Semiconductive Cera. Cap.	0.1000 25V Z				01
	C905	**UR867100**	Electrolytic Cap.	10.00 50.0V				01
	C906	**VC694800**	Semiconductive Cera. Cap.	0.1000 25V Z				01
	C907	**UR867100**	Electrolytic Cap.	10.00 50.0V				01
	C908	**VK373000**	Electrolytic Cap.	4700 25.0V				03
	D702	**VB941200**	Diode	1SS133,1SS176				01
	-708	**VB941200**	Diode	1SS133,1SS176				01
⚠	D901	**VL723600**	Diode	20E1-FC4				01
⚠	D902	**VL723600**	Diode	20E1-FC4				01
	D903	**VB941200**	Diode	1SS133,1SS176				01
	D904	**VB481900**	Diode	11ES4				01
	IC701	**XR793A00**	IC	KS0076BQ-00		LCD DRIVER		05
*	IC701	**XV226A00**	IC	KS0066U-10B		LCD DRIVER		
	IC801	**XQ619A00**	IC	LA4705NA		POWER AMP 17W BTL		05
	IC901	**XT625A00**	IC	S-81250SGY-Z		REGURATOR +5V		02
*	IC902	**XU814A00**	IC	PQ05RD11		REGURATOR +5V		
	JK601	**VB312600**	Phone Jack	YKB21-5012		FOOT SWITCH		02
	JK602	**VJ107200**	DIN Connector	5P YKF51-5050		MIDI IN		01
	JK603	**VJ107200**	DIN Connector	5P YKF51-5050		MIDI OUT		01
	JK801	**LB101870**	Phone Jack	YKB21-5006		PHONES/AUX OUT		03
⚠	JK901	**VC664500**	Connector	HEC2305		DC-IN		01
	J701	**HF754680**	Carbon Resistor	68.0 1/4 J				01
	L601	**VB835000**	Coil	FL5R200QNT				01
	L601	**VF968800**	Coil	SBT-0260TF				01
	L603	**VB835000**	Coil	FL5R200QNT				01
	-606	**VB835000**	Coil	FL5R200QNT				01
	L603	**VF968800**	Coil	SBT-0260TF				01
	-606	**VF968800**	Coil	SBT-0260TF				01
	L608	**VB835000**	Coil	FL5R200QNT				01

*** : New parts** **RANK : Japan only**

	REF NO.	PART NO.	DESCRIPTION			REMARKS	QTY	RANK
	-610	**VB835000**	Coil	FL5R200QNT				01
	L608	**VF968800**	Coil	SBT-0260TF				01
	-610	**VF968800**	Coil	SBT-0260TF				01
	L801	**VB835000**	Coil	FL5R200QNT				01
	-803	**VB835000**	Coil	FL5R200QNT				01
	L801	**VF968800**	Coil	SBT-0260TF				01
	-803	**VF968800**	Coil	SBT-0260TF				01
⚠	L901	**VB835000**	Coil	FL5R200QNT				01
⚠	L901	**VF968800**	Coil	SBT-0260TF				01
⚠	L902	**VB835000**	Coil	FL5R200QNT				01
⚠	L902	**VF968800**	Coil	SBT-0260TF				01
	RA702	**V0072900**	Resistor Array	EXB-Z6N222J				01
	R603	**HF755220**	Carbon Resistor	220.0 1/4 J				01
	R722	**VR346900**	Thermistor	ERTD2FGJ801S 800				03
	R723	**HF755220**	Carbon Resistor	220.0 1/4 J				01
*	R724	**HF757910**	Carbon Resistor	91.0K 1/4 J				
	R801	**HF757270**	Carbon Resistor	27.0K 1/4 J				01
	R802	**HF757270**	Carbon Resistor	27.0K 1/4 J				01
	R803	**HF756680**	Carbon Resistor	6.8K 1/4 J				01
	R804	**HF756680**	Carbon Resistor	6.8K 1/4 J				01
	R805	**HF757100**	Carbon Resistor	10.0K 1/4 J				01
	R806	**HF753220**	Carbon Resistor	2.2 1/4 J				01
	-809	**HF753220**	Carbon Resistor	2.2 1/4 J				01
	R810	**HF755100**	Carbon Resistor	100.0 1/4 J				01
	R811	**HF755100**	Carbon Resistor	100.0 1/4 J				01
	R813	**HF755330**	Carbon Resistor	330.0 1/4 J				01
	R814	**HF755330**	Carbon Resistor	330.0 1/4 J				01
	R901	**HF756100**	Carbon Resistor	1.0K 1/4 J				01
⚠	SW901	**VY980400**	Push Switch	SDDLB1 J,UC,CEE		STAND-BY/ON		03
⚠	TH901	**VU847300**	Protector Switch	RUE185 1.85A 30V				03
	VR801	**VZ048400**	Rotary Variable Resistor	A10.0K XV0141GPVN2		MASTER VOLUME		02
	W602	**--**	Connector Assembly			(V221400)		
	W703	**--**	Connector Assembly			(V221410)		
	W801	**--**	Connector Assembly			(V221380)		
	W802	**--**	Connector Assembly			(V221490)		
	W803	**--**	Connector Assembly			(V221500)		
	W805	**--**	Connector Assembly			(V221430)		
	W901	**--**	Connector Assembly			(V221390)		
	W902	**--**	Connector Assembly			(V221360)		
	W903	**--**	Connector Assembly			(V251240)		
	ZD901	**VG439500**	Zener Diode	MTZ J 10.0B 10.0V				01
*		**V2063500**	Circuit Board	DM		(XU438B0)		
		EP600190	Bind Head Tapping Screw-B	3.0X8 MFZN2BL				01
	CA701	**VH484100**	Ceramic Capacitor Array	100P 50V M				02
	CA702	**VH484100**	Ceramic Capacitor Array	100P 50V M				02
*	CL101	**V2192500**	Ceramic Resonator	8.4672M CST8.46MT				
	CN101	**VK024900**	Wire Trap	52147 5P TE				01
	CN102	**VF728300**	Wire Trap	52147 6P TE				01
	CN501	**VK024800**	Wire Trap	52147 4P TE				01
	CN601	**VF728300**	Wire Trap	52147 6P TE				01
	CN702	**VJ861600**	Wire Trap	52147 16P TE				01
	C101	**UR828100**	Electrolytic Cap.	100.00 10.0V				01
	C102	**VC694800**	Semiconductive Cera. Cap.	0.1000 25V Z				01
	C104	**FG652100**	Ceramic Capacitor-SL	100P 50V J				01
	C105	**VC694800**	Semiconductive Cera. Cap.	0.1000 25V Z				01
	C106	**UR828100**	Electrolytic Cap.	100.00 10.0V				01
	C107	**VC694800**	Semiconductive Cera. Cap.	0.1000 25V Z				01
	-109	**VC694800**	Semiconductive Cera. Cap.	0.1000 25V Z				01
	C110	**UR828100**	Electrolytic Cap.	100.00 10.0V				01
	C111	**UR828100**	Electrolytic Cap.	100.00 10.0V				01
	C112	**VC694800**	Semiconductive Cera. Cap.	0.1000 25V Z				01
	C113	**UR828100**	Electrolytic Cap.	100.00 10.0V				01
	C114	**VC694800**	Semiconductive Cera. Cap.	0.1000 25V Z				01
	C115	**UR828100**	Electrolytic Cap.	100.00 10.0V				01
	C116	**VC694800**	Semiconductive Cera. Cap.	0.1000 25V Z				01
	C117	**UR828100**	Electrolytic Cap.	100.00 10.0V				01
	C118	**VC694800**	Semiconductive Cera. Cap.	0.1000 25V Z				01
	C119	**UR828100**	Electrolytic Cap.	100.00 10.0V				01
	C120	**VC694800**	Semiconductive Cera. Cap.	0.1000 25V Z				01

*** : New parts** **RANK : Japan only**

	REF NO.	PART NO.	DESCRIPTION			REMARKS	QTY	RANK
	C201	**VC694800**	Semiconductive Cera. Cap.	0.1000 25V Z				01
	C202	**VC694800**	Semiconductive Cera. Cap.	0.1000 25V Z				01
	C301	**VC694800**	Semiconductive Cera. Cap.	0.1000 25V Z				01
	C302	**VC694800**	Semiconductive Cera. Cap.	0.1000 25V Z				01
	C303	**UR828100**	Electrolytic Cap.	100.00 10.0V				01
	C501	**VC694800**	Semiconductive Cera. Cap.	0.1000 25V Z				01
	C502	**UR837470**	Electrolytic Cap.	47.00 16.0V				01
	C503	**UR837470**	Electrolytic Cap.	47.00 16.0V				01
	C504	**FG613220**	Ceramic Capacitor-B	2200P 50V K				01
	C505	**FG613220**	Ceramic Capacitor-B	2200P 50V K				01
	C506	**FG612220**	Ceramic Cap.-B	220P 50V K				01
	C507	**FG612220**	Ceramic Cap.-B	220P 50V K				01
	C508	**FG612330**	Ceramic Cap.-B	330P 50V K				01
	C509	**FG612330**	Ceramic Cap.-B	330P 50V K				01
	C510	**UR866470**	Electrolytic Cap.	4.70 50.0V				01
	C511	**UR866470**	Electrolytic Cap.	4.70 50.0V				01
	C512	**VC694800**	Semiconductive Cera. Cap.	0.1000 25V Z				01
	C514	**UR837470**	Electrolytic Cap.	47.00 16.0V				01
	C515	**FG652100**	Ceramic Capacitor-SL	100P 50V J				01
	C516	**FG652100**	Ceramic Capacitor-SL	100P 50V J				01
	C601	**VC694800**	Semiconductive Cera. Cap.	0.1000 25V Z				01
	C602	**FG613100**	Ceramic Capacitor-B	1000P 50V K				01
	C603	**VC694800**	Semiconductive Cera. Cap.	0.1000 25V Z				01
	D601	**VB941200**	Diode	1SS133,1SS176				01
	IC101	**XT890A00**	IC	HG73C201FD		SWX00		09
	IC102	**XT333A00**	IC	UPC29M33HF		REGURATOR 3.3V		03
	IC103	**XR902A00**	IC	IC-PST591D-2		RESET		02
*	IC201	**XV109100**	IC	MASKROM 32M		MASKROM 32M (WAVE+PRG)		
	IC201	**VK863100**	IC Socket	DICF-42CS-E				03
	IC202	**VK863100**	IC Socket	DICF-42CS-E				03
*	IC301	**XV003A00**	IC	M5M51008BFP-55LL		SRAM1		
*	IC302	**XV003A00**	IC	M5M51008BFP-55LL		SRAM2		
	IC501	**XR998A00**	IC	UPD6379AGR		DAC		04
	IC502	**XC520A00**	IC	UPC4570C		OP AMP		01
	IC601	**VG181900**	Photo Coupler	PC-900V				03
	L101	**VB835000**	Coil	FL5R200QNT				01
	L101	**VF968800**	Coil	SBT-0260TF				01
	L102	**VB835000**	Coil	FL5R200QNT				01
	L102	**VF968800**	Coil	SBT-0260TF				01
	L105	**VB835000**	Coil	FL5R200QNT				01
	-109	**VB835000**	Coil	FL5R200QNT				01
	L105	**VF968800**	Coil	SBT-0260TF				01
	-109	**VF968800**	Coil	SBT-0260TF				01
	RA701	**VG733700**	Resistor Array	EXB-Z09E 47K X 8				01
	R101	**HF757470**	Carbon Resistor	47.0K 1/4 J				01
	R102	**HF755220**	Carbon Resistor	220.0 1/4 J				01
	R103	**HF757100**	Carbon Resistor	10.0K 1/4 J				01
	R104	**HF755100**	Carbon Resistor	100.0 1/4 J				01
	R108	**HF755100**	Carbon Resistor	100.0 1/4 J				01
	R110	**HF757470**	Carbon Resistor	47.0K 1/4 J				01
	R111	**HF755100**	Carbon Resistor	100.0 1/4 J				01
	R112	**HF755100**	Carbon Resistor	100.0 1/4 J				01
	R114	**HF755100**	Carbon Resistor	100.0 1/4 J				01
	R115	**HF757470**	Carbon Resistor	47.0K 1/4 J				01
	R116	**HF757470**	Carbon Resistor	47.0K 1/4 J				01
	R117	**HF758100**	Carbon Resistor	100.0K 1/4 J				01
	R118	**HF758100**	Carbon Resistor	100.0K 1/4 J				01
	R301	**HF757470**	Carbon Resistor	47.0K 1/4 J				01
	R302	**HF755100**	Carbon Resistor	100.0 1/4 J				01
	R501	**HF756220**	Carbon Resistor	2.2K 1/4 J				01
	R502	**HF756220**	Carbon Resistor	2.2K 1/4 J				01
	R503	**HF757220**	Carbon Resistor	22.0K 1/4 J				01
	-508	**HF757220**	Carbon Resistor	22.0K 1/4 J				01
	R601	**HF755220**	Carbon Resistor	220.0 1/4 J				01
	R604	**HF755220**	Carbon Resistor	220.0 1/4 J				01
	R605	**HF757100**	Carbon Resistor	10.0K 1/4 J				01
	R607	**HF757220**	Carbon Resistor	22.0K 1/4 J				01
	R608	**HF756270**	Carbon Resistor	2.7K 1/4 J				01
	R609	**HF757470**	Carbon Resistor	47.0K 1/4 J				01
	R610	**HF756100**	Carbon Resistor	1.0K 1/4 J				01

*** : New parts** **RANK : Japan only**

	REF NO.	PART NO.	DESCRIPTION			REMARKS	QTY	RANK
	R712	**HF755220**	Carbon Resistor	220.0 1/4 J				01
	-721	**HF755220**	Carbon Resistor	220.0 1/4 J				01
	TR601	**IC174070**	Transistor	2SC1740S R,S				01
	TR602	**IC174070**	Transistor	2SC1740S R,S				01
		VV583900	Circuit Board	MK-H		(XR565B0)		09
		VV437800	Diode	1N4148(DO-34)				01
		VK025600	Wire Trap	52147 12P TE				01
		VK024900	Wire Trap	52147 5P TE				01
		VV583800	Circuit Board	MK-L		(XR564B0)		09
		VV437800	Diode	1N4148(DO-34)				01
		VK025600	Wire Trap	52147 12P TE				01
		VK025100	Wire Trap	52147 7P TE				01
*		**V2404900**	Circuit Board	MKS3		(XU878B0)		
		--	Vibration-proof Tape	10X64X0.5		(VK34680)		
	C1	**FG651220**	Ceramic Capacitor-SL	22P 50V J				01
	C1	**VR027400**	Ceramic Capacitor-SL	22P 63V J				01
	C2	**FG651220**	Ceramic Capacitor-SL	22P 50V J				01
	C2	**VR027400**	Ceramic Capacitor-SL	22P 63V J				01
	C3	**UR828100**	Electrolytic Cap.	100.00 10.0V				01
	C4	**VD930900**	Semiconductive Cera. Cap.	0.1000 25V M				01
	C4	**VM902400**	Seniconductive Cera. Cap.	0.1000 25V Z				01
	R1	**HF456470**	Carbon Resistor	4.7K 1/4 J				01
	R1	**VL631400**	Carbon Resistor	4.7K 1/6 J				01
	R2	**HF456470**	Carbon Resistor	4.7K 1/4 J				01
	R2	**VL631400**	Carbon Resistor	4.7K 1/6 J				01
	R3	**HF457470**	Carbon Resistor	47.0K 1/4 J				01
	R3	**VL632600**	Carbon Resistor	47.0K 1/6 J				01
	CA1	**VP755200**	Ceramic Capacitor Array	100P 50V K				02
	CA2	**VT487100**	Ceramic Capacitor Array	470P X12				02
	CL1	**VN002100**	Ceramic Resonator	CST8.00MTW140				02
	CL1	**VQ305500**	Ceramic Resonator	8.00M EFOEC8004T3				02
	CN1	**VF728300**	Wire Trap	52147 6P TE				01
	CN2	**VK025600**	Wire Trap	52147 12P TE				01
	CN3	**VK025100**	Wire Trap	52147 7P TE				01
	CN4	**VK024900**	Wire Trap	52147 5P TE				01
	IC1	**XR951A00**	IC	HD63B05V0F07P		CPU		06
	RA1	**VH373200**	Resistor Array	RGLE12X473J				01
		XN789B00	Speaker	12.0cm 4ohm 5W				05
*		**V0054000**	LCD	TYPE-B-T				
*		**V2271100**	LCD	TYPE-B-R				

*** : New parts** **RANK : Japan only**

■ PANEL SWITCH TABLE

	PN-PDT(0)	PN-PDT(1)	PN-PDT(2)	PN-PDT(3)	PN-PDT(4)	PN-PDT(5)	PN-PDT(6)	PN-PDT(7)
	SW01	SW02	SW03	SW04	SW05	SW06	SW07	SW08
PN-PAD(5)	-	CHORD GUID	PRESET A	ACMP ON/OFF	OVERALL -	-	-	STYLE
	SW09	SW10	SW11	SW12	SW13	SW14	SW15	SW16
PN-PAD(4)	-	RECORD	PRESET B	SYNC-START	OVERALL • ¥	NUMERICAL KEYPAD +	NUMERICAL KEYPAD 0	VOICE
	SW17	SW18	SW19	SW20	SW21	SW22	SW23	SW24
PN-PAD(3)	-	USER 1	DUAL	START/ STOP	OVERALL • £	NUMERICAL KEYPAD 9	NUMERICAL KEYPAD 8	NUMERICAL KEYPAD -
	SW25	SW26	SW27	SW28	SW29	SW30	SW31	SW32
PN-PAD(2)	-	USER 2	TOUCH	INTRO/ ENDING	OVERALL +	NUMERICAL KEYPAD 6	NUMERICAL KEYPAD 5	NUMERICAL KEYPAD 7
	SW33	SW34	SW35	WS36	SW37	SW38	SW39	SW40
PN-PAD(1)	-	USER 3	REVERB	AUTO FILL MAIN A	FUNCTION	NUMERICAL KEYPAD 3	NUMERICAL KEYPAD 2	NUMERICAL KEYPAD 4
	SW41	SW42	SW43	SW44	SW45	SW46	SW47	SW48
PN-PAD(0)	-	USER 4	HARMONY	AUTO FILL MAIN B	SONG	METRONOME	PORTABLE GRAND	NUMERICAL KEYPAD 1