ELECTRONIC PIANO
P-80
SERVICE MANUAL



■ **CONTENTS**

SPECIFICATIONS ····· 3
CIRCUIT BOARD LAYOUT ····· 4
PANEL LAYOUT ····· 5
BLOCK DIAGRAM ····· 6
DISASSEMBLY PROCEDURE ····· 7
LSI PIN DESCRIPTION ····· 12
IC BLOCK DIAGRAM ····· 13
CIRCUIT BOARDS ····· 14
TEST PROGRAM ····· 16
INITIALIZE ····· 17
MIDI IMPLEMENTATION CHART ····· 18
MIDI DATA FORMAT ····· 19
PARTS LIST
OVERALL CIRCUIT DIAGRAM

PK **001631**
19991001-140000

YAMAHA
HAMAMATSU, JAPAN
1.84K-686 **Printed in Japan '99.09**

IMPORTANT NOTICE

This manual has been provided for the use of authorized Yamaha Retailers and their service personnel. It has been assumed that basic service procedures inherent to the industry, and more specifically Yamaha Products, are already known and understood by the users, and have therefore not been restated.

WARNING: Failure to follow appropriate service and safety procedures when servicing this product may result in personal injury, destruction of expensive components and failure of the product to perform as specified. For these reasons, we advise all Yamaha product owners that all service required should be performed by an authorized Yamaha Retailer or the appointed service representative.

IMPORTANT: This presentation or sale of this manual to any individual or firm does not constitute authorization, certification, recognition of any applicable technical capabilities, or establish a principal-agent relationship of any form.

The data provided is belived to be accurate and applicable to the unit(s) indicated on the cover. The research engineering, and service departments of Yamaha are continually striving to improve Yamaha products. Modifications are, therefore, inevitable and changes in specification are subject to change without notice or obligation to retrofit. Should any discrepancy appear to exist, please contact the distributor's Service Division.

WARNING: Static discharges can destroy expensive components. Discharge any static electricity your body may have accumulated by grounding yourself to the ground bus in the unit (heavy gauge black wires connect to this bus.)

IMPORTANT: Turn the unit OFF during disassembly and parts replacement. Recheck all work before you apply power to the unit.

LITHIUM BATTERY HANDLING

This product uses a lithium battery for memory back-up.

WARNING: Lithium batteries are dangerous because they can be exploded by improper handling. Observe the following precautions when handling or replacing lithium batteries.

- Leave lithium battery replacement to qualified service personnel.
- Always replace with batteries of the same type.
- When installing on the PC board by soldering, solder using the connection terminals provided on the battery cells.
- Never solder directly to the cells. Perform the soldering as quickly as possible.
- Never reverse the battery polarities when installing.
- Do not short the batteries.
- Do not attempt to recharge these batteries.
- Do not disassemble the batteries.
- Never heat batteries or throw them into fire.

ADVARSEL!

Lithiumbatteri-Eksplosionsfare ved fejlagtig håndtering. Udskiftning må kun ske med batteri af samme fabrikat og type. Levér det brugte batteri tilbage til leverandøren.

VARNING

Explosionsfara vid felaktigt batteribyte.
Använd samma batterityp eller en ekvivalent typ som rekommenderas av apparattillverkaren.
Kassera använt batteri enligt fabrikantens instruktion.

VAROITUS

Paristo voi räjähtää, jos se on virheellisesti asennettu.
Vaihda paristo ainoastaan laitevalmistajan suosittelemaan tyyppiin.
Hävitä käytetty paristo valmistajan ohjeiden mukaisesti.

The following information complies with Dutch Official Gazette 1995. 45; ESSENTIALS OF ORDER ON THE COLLECTION OF BATTERIES.

- Please refer to the diassembly procedure for the removal of Back-up Battery.
- Leest u voor het verwijderen van de backup batterij deze beschrijving.

WARNING: CHEMICAL CONTENT NOTICE!

The solder used in the production of this product contains LEAD. In addition, other electrical/electronic and/or plastic (where applicable) components may also contain traces of chemicals found by the California Health and Welfare Agency (and possibly other entities) to cause cancer and/or birth defects or other reproductive harm.

DO NOT PLACE SOLDER, ELECTRICAL/ELECTRONIC OR PLASTIC COMPONENTS IN YOUR MOUTH FOR ANY REASON WHAT SO EVER!

Avoid prolonged, unprotected contact between solder and your skin! When soldering, do not inhale solder fumes or expose eyes to solder/flux vapor!

If you come in contact with solder or components located inside the enclosure of this product, wash your hands before handling food.

■ WARNING

Components having special characteristics are marked ⚠ and must be replaced with parts having specification equal to those originally installed.

■ SPECIFICATIONS

KEYBOARD	88 KEYS (A-1 — C7)
POLYPHONY	64 NOTES MAX.
VOICE SELECTORS	12 voices + Variation for each voice
REVERB	ROOM, HALL 1, HALL 2, STAGE
EFFECT	CHORUS, SYMPHONIC, TREMOLO, DELAY
TOUCH SENSITIVITY	HARD, MEDIUM, SOFT, FIXED
SONG CONTROLS	PRESET, TRACK 1, 2, START/STOP, REC
PEDAL CONTROL	SUSTAIN
OTHER CONTROLS	MASTER VOLUME, BRILLIANCE, DEMO, TRANSPOSE, SPLIT, METRONOME START/STOP, TEMPO/FUNCTION# ▲/▼, FUNCTION, –/NO▼, +/YES▲, LED Display
JACKS/CONNECTORS	OUT PUT: L and R Pin Jacks, L/L+R and R Phone Jacks (Output impedance 600 Ω), MIDI IN/OUT, HOST SELECT, TO HOST, PHONES x 2, SUSTAIN, DC IN 12 V
POWER SUPPLY	Yamaha PA-3B power adaptor Rated Voltage DC12 V Rated Current 700 mA
DIMENTIONS (W x D x H)	1347 x 285 x 128 mm (53" x 11-1/4" x 5")
WEIGHT	16.8 kg (37 lbs.)

■ CIRCUIT BOARD LAYOUT

Location	Connector Assembly	Destination		Pin	L	Parts No.
(70)	KRD-KRD	DM-CN3	KEYBOARD	8P	900	VK12430
(200)	VR1	DM-CN4	PNL-CN1	4P		V444240
(210)	VR2	PNL-CN2	M-CN1	5P		V444250
(220)	PN1	PNL-CN201	DM-CN2	9P	220	V444260
		PNR-CN301	PNL-CN201	9P	680	
(230)	PN2	DM-CN1	PNL-CN202	12P	220	V444270
		PNL-CN202	PNR-CN302	12P	680	
(240)	+ B	M-CN3	DM-CN5	6P	100	V444280
	Ribbon	M-CN2	SW-CN3	4P		V444290
	Ribbon	DM-CN6	JACK-CN1	9P		V444300

※ Connector assembly listed above are not available as service parts.

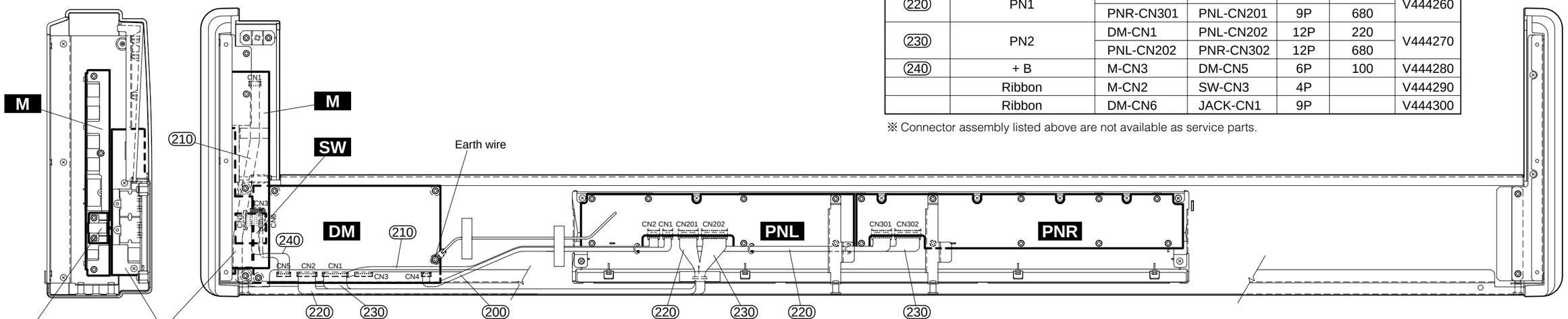

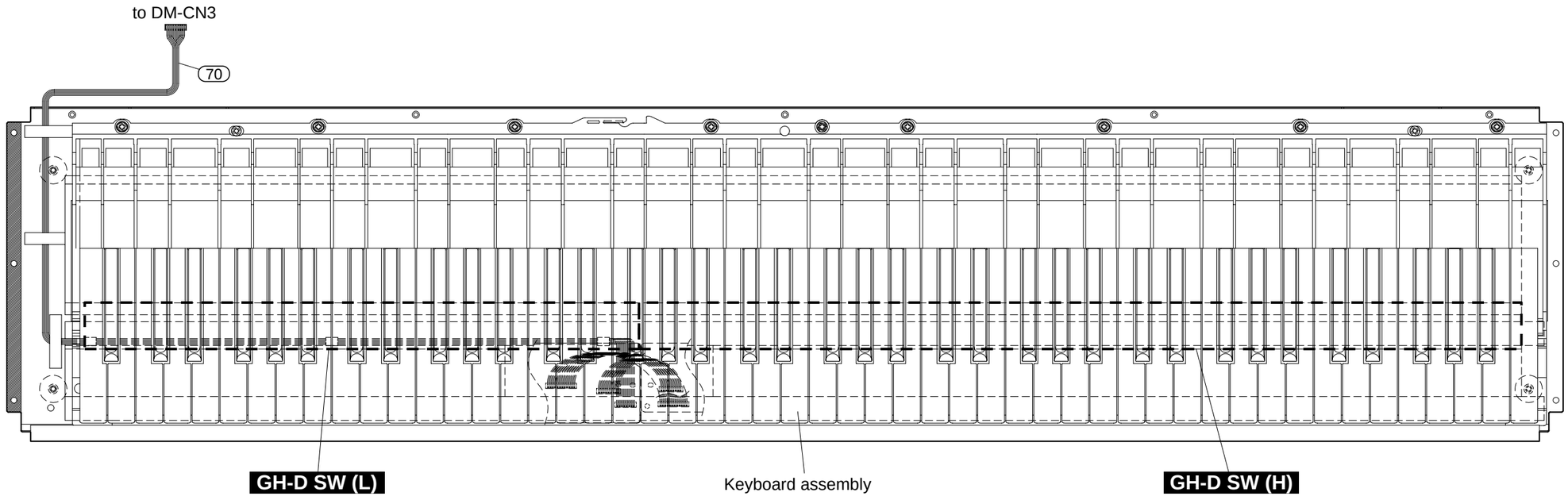

2NC-V440570 ⚠3

■ PANEL LAYOUT

● Control panel

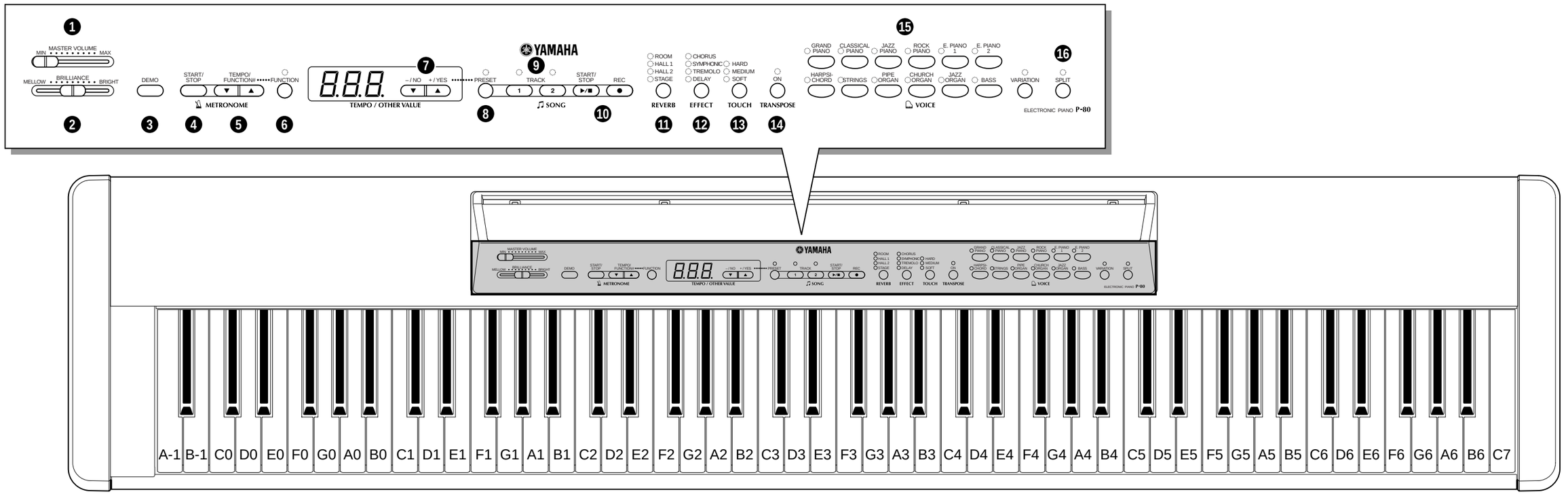

❶ [MASTER VOLUME] Control
❷ [BRILLIANCE] Control
❸ [DEMO] Button
❹ METRONOME [START/STOP] Button
❺ [TEMPO/FUNCTION# ▼, ▲] Buttons
❻ [FUNCTION] Button
❼ [–/NO▼], [+/YES▲] Buttons
❽ SONG [PRESET] Button
❾ TRACK [1] and [2] Buttons
❿ SONG [START/STOP] and [REC] Buttons
⓫ [REVERB] Button
⓬ [EFFECT] Button
⓭ [TOUCH] Button
⓮ [TRANSPOSE] Button
⓯ VOICE Buttons & [VARIATION] Button
⓰ [SPLIT] Button

● Side panel

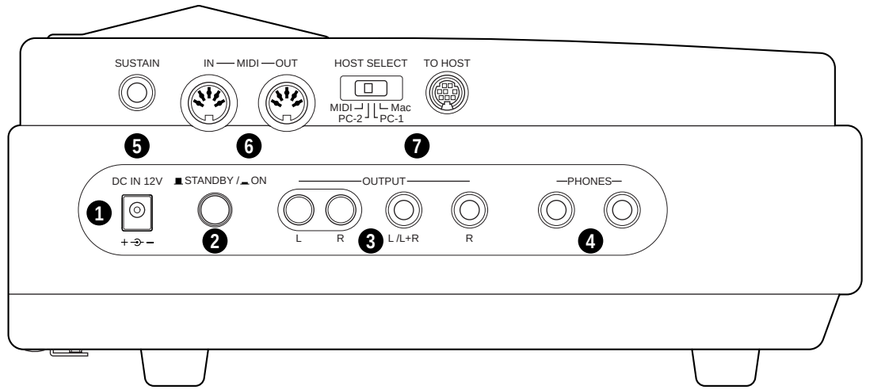

❶ [DC IN 12V] Jack
❷ [STANDBY/ON] Switch
❸ OUTPUT Jacks :
L and R Pin jacks, L/L+R and R Phone Jacks
❹ PHONES Jacks
❺ SUSTAIN Jack
❻ MIDI IN, and OUT Connectors
❼ TO HOST Connector & HOST SELECT Switch

■ BLOCK DIAGRAM

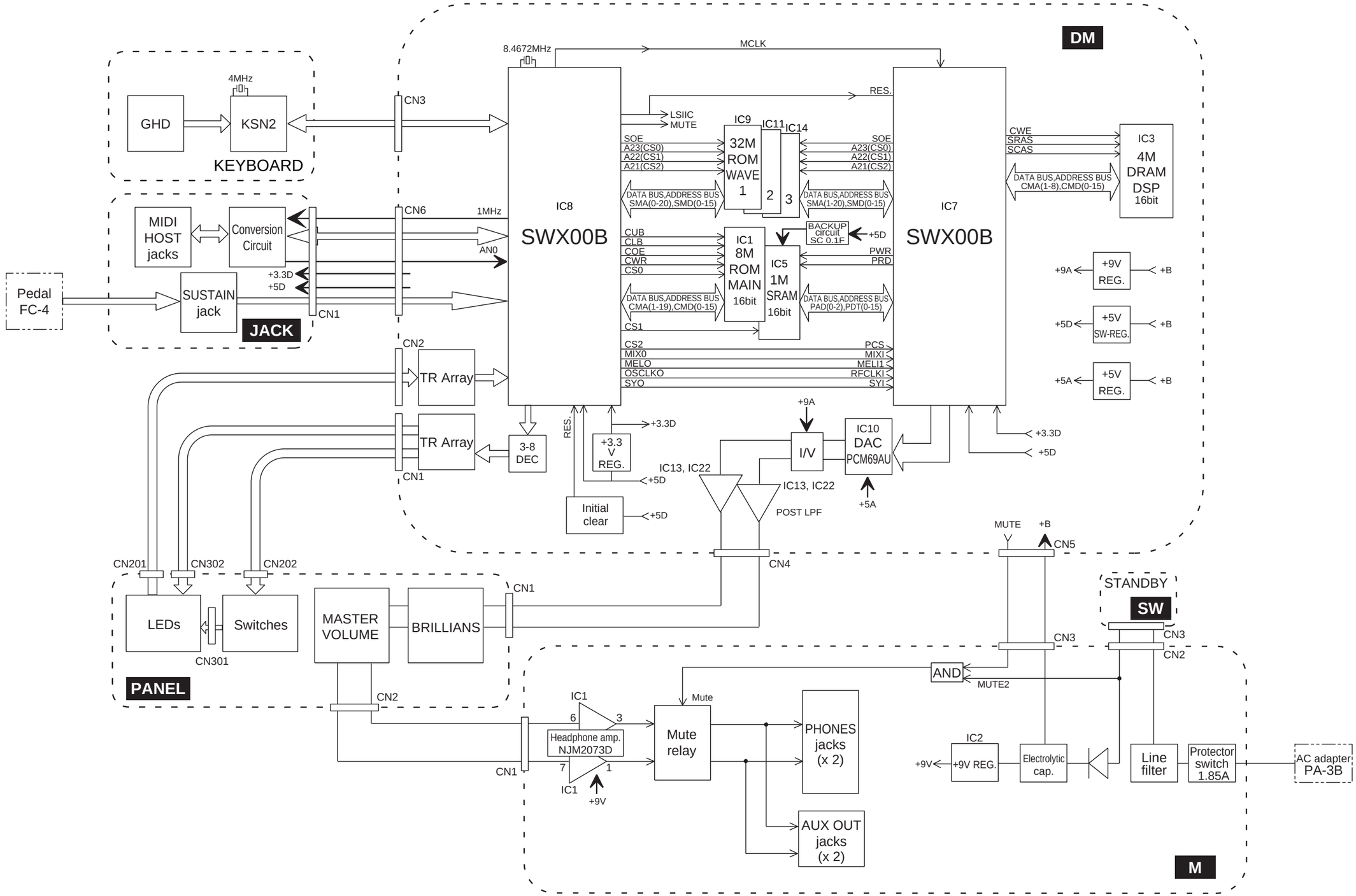

28CA1-8814620

■ DISASSEMBLY PROCEDURE

1. Upper Case Assembly

1-1 Remove the twelve (12) screws marked [60A] located on the bottom board. (Fig.1)

1-2 Lift the keyboard assembly from the front and take it out of the upper case assembly. (Fig.2)

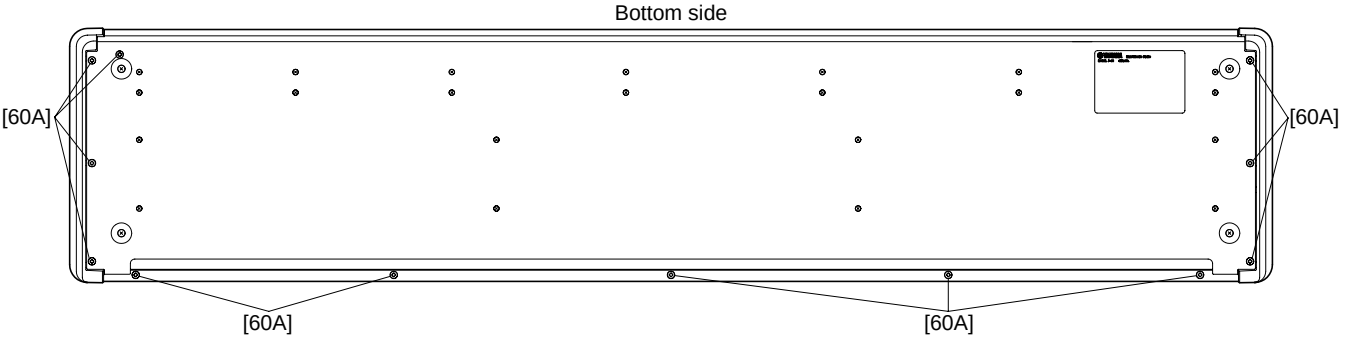

[60]: Bind Head Screw 4.0X6 MFZN2BL (EG340340)

(Fig. 1)

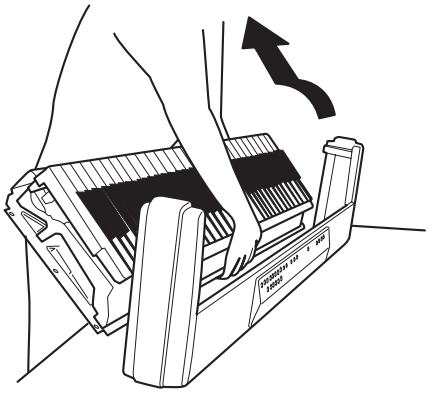

(Fig. 2)

2. M Circuit Board

2-1 Remove the upper case assembly. (See Procedure 1.)

2-2 Remove the three (3) screws marked [250A]. The M circuit board can then be removed. (Fig.3)

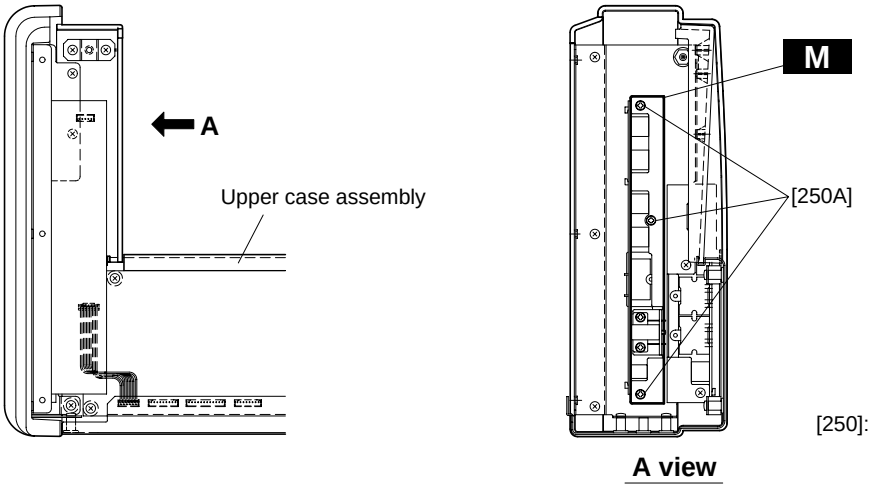

[250]: Bind Head Tapping Screw-B 3.0X6 MFZN2Y (EP600130)

(Fig. 3)

3. SW Circuit Board

3-1 Remove the upper case assembly. (See Procedure 1.)

3-2 Remove the M circuit board. (See Procedure 2.)

3-3 Remove the two (2) screws marked [250B]. The SW circuit board can then be removed. (Fig.4)

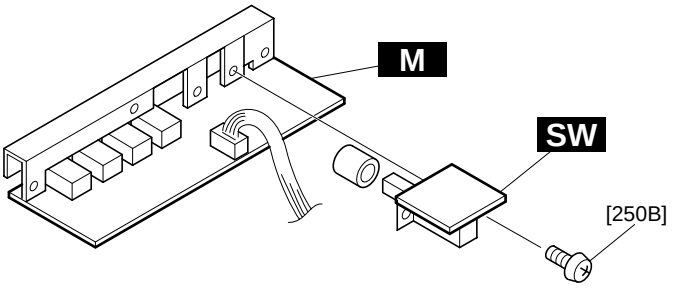

[250]: Bind Head Tapping Screw-B 3.0X6 MFZN2Y (EP600130)

(Fig. 4)

4. DM Circuit Board

4-1 Remove the upper case assembly. (See Procedure 1.)

4-2 Remove the M circuit board. (See Procedure 2.)

4-3 Remove the four (4) screws marked [250C]. The DM circuit board can then be removed. (Fig.5)

5. JACK Circuit Board

5-1 Remove the upper case assembly. (See Procedure 1.)

5-2 Remove the M circuit board. (See Procedure 2.)

5-3 Remove the DM circuit board. (See Procedure 4.)

5-4 Remove the three (3) screws marked [250D]. The JACK circuit board can then be removed. (Fig.5)

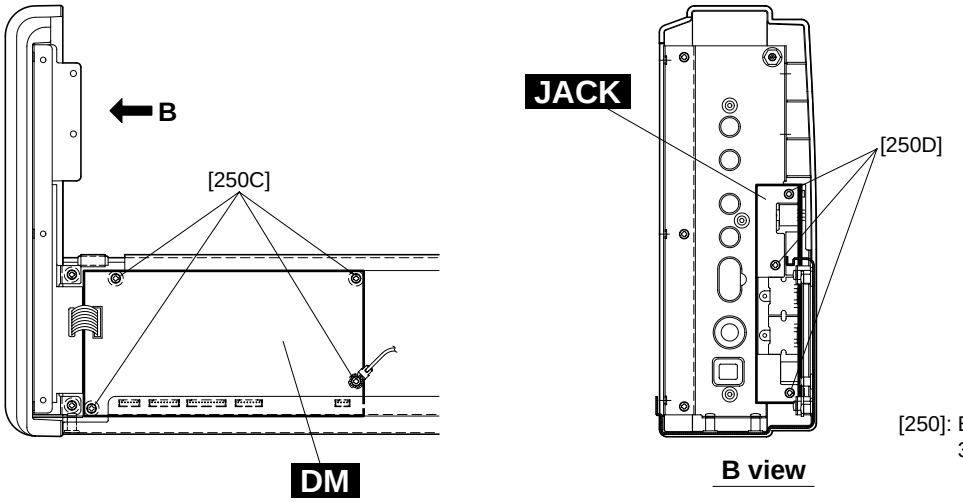

[250]: Bind Head Tapping Screw-B 3.0X6 MFZN2Y (EP600130)

(Fig. 5)

6. PNL Circuit Board

6-1 Remove the upper case assembly. (See Procedure 1.)

6-2 Remove the two (2) screws marked [250E] and the screw marked [260A]. The angle bracket can then be removed. (Fig.6)

6-3 Remove the seven (7) screws marked [250F]. The PNL circuit board can then be removed. (Fig.6)

7. PNR Circuit Board

7-1 Remove the upper case assembly. (See Procedure 1.)

7-2 Remove the two (2) screws marked [250G] and the screw marked [260B]. The angle bracket can then be removed. (Fig.6)

7-3 Remove the nine (9) screws marked [250H]. The PNR circuit board can then be removed. (Fig.6)

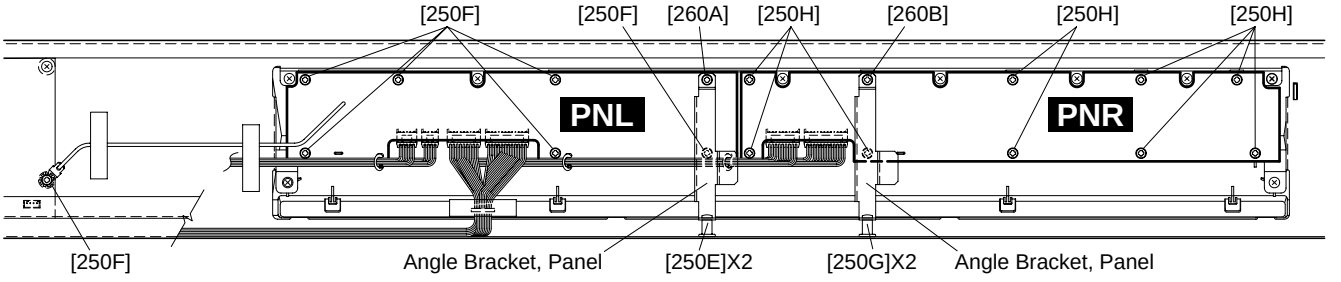

[250]: Bind Head Tapping Screw-B 3.0X6 MFZN2Y (EP600130)
[260]: Bind Head Tapping Screw-B 3.0X8 MFZN2BL (EP600190)

(Fig. 6)

8. Keyboard Assembly

8-1 Remove the upper case assembly. (See Procedure 1.)

8-2 Remove the nine (9) screws marked [40] and the two (2) screws marked [60B]. The keyboard assembly can then be removed. (Fig.7)

* When you take the keyboard assembly out of the bottom board, hold the middle of it. Lift the keyboard assembly from the front and the take it out of the bottom board as shown in the figures. (Fig. 8, Fig.9)

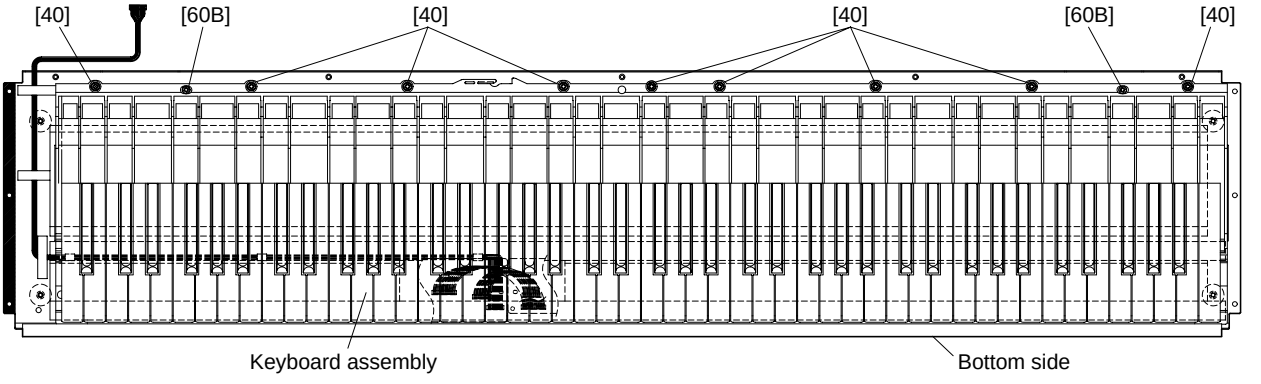

[40]: Pan Head Screw PW 5.0X16 MFZN2BL (V4439900)
[60]: Bind Head Screw 4.0X6 MFZN2BL (EG340340)

(Fig. 7)

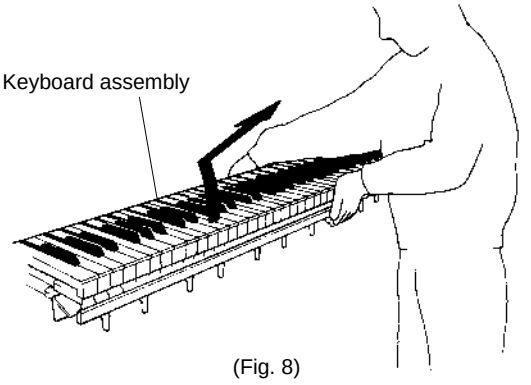

(Fig. 8)

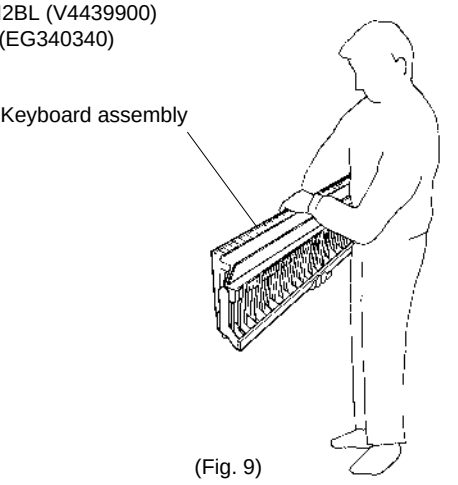

(Fig. 9)

9. Disassembling the Keyboard

* After inserting a round stick (Rod:TX000670) between the frame and the keys, remove the circuit boards. (Fig.10)

9-1 Remove the keyboard assembly out of the bottom board. (See Procedure 8.)

9-2 GH-D SW (L) Circuit Board
Remove the seven (7) screws marked [260C]. The GH-D SW (L) circuit board can then be removed. (Fig.11)

9-3 GH-D SW (H) Circuit Board
Remove the ten (10) screws marked [260D]. The GH-D SW (H) circuit board can then be removed. (Fig.11)

* Keys can be removed without removing the circuit boards.

* After removing the GH-D SW (L) and GH-D SW (H) circuit boards, and the rubbers can then be removed.

9-4 White key
Insert a thin plate between the white keys, near the triangle mark around the fulcrum of the key, and press down the stopper marked [A] to remove the key. (Fig.12, Fig.13)

* Take care not to damage the key spring when removing a key.

* A black key can be removed after the white keys on either side have been removed.

9-5 After a key has been removed, push a key spring down once to take it out of the hook. (Fig.14)
Place the keyboard assembly upside-down and peel the stopper away. Then hammer of the white key can then be removed. (Fig.15)

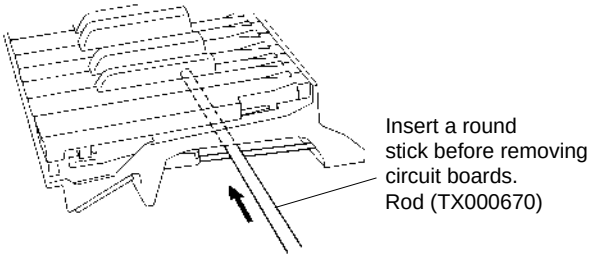

(Fig. 10)

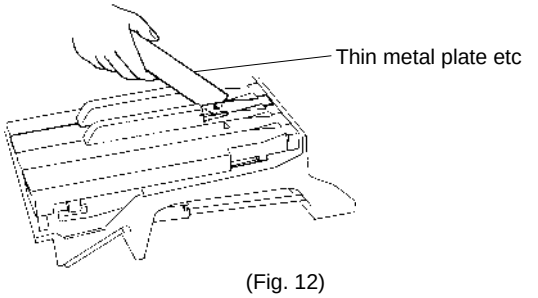

(Fig. 12)

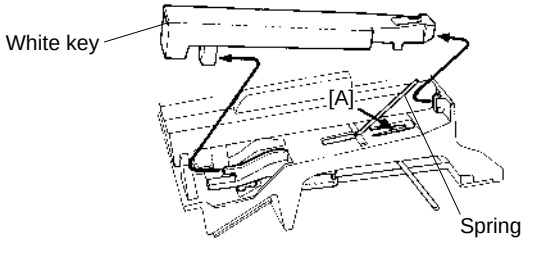

(Fig. 13)

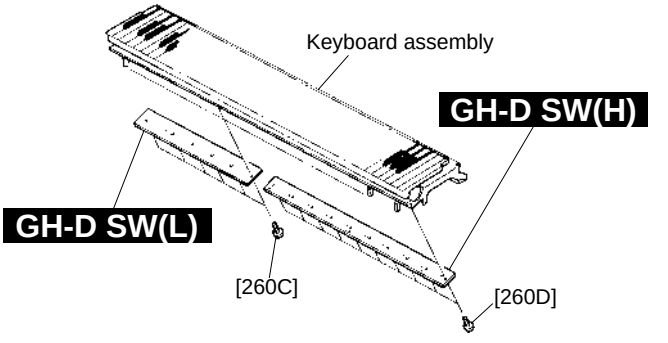

[260]: Bind Head Tapping Screw-P 3.0X10 MFZN2Y (VT413400)

(Fig. 11)

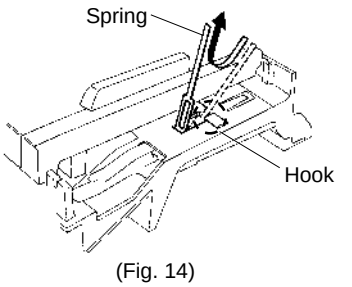

(Fig. 14)

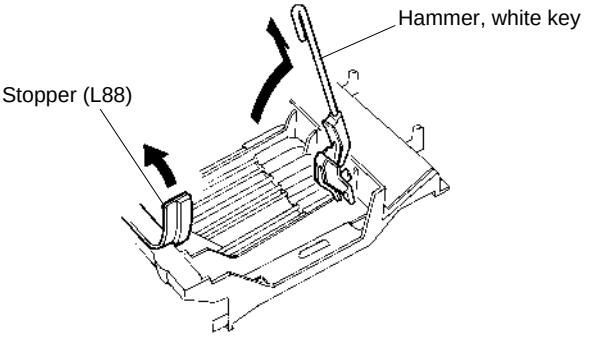

(Fig. 15)

10 Assembling the keyboard

10-1 Place the keyboard assembly upside-down, insert a hammer assembly into the frame, and put the stopper (L88) on. (Fig.16)

* There are four (4) kinds of hammers that differ in weight.

10-2 Place the keyboard assembly rightside up. Fix key springs on the frame by setting one at each slit and pushing down once on each key spring. (Fig.16, Fig.17)

* Be careful of the direction of the spring.

10-3 After a key has been fit to part [C] and key guide, make sure that the spring is fixed to the key and then press down part [B] of the key. (Fig. 18)

10-4 Tighten the seven (7) screws marked [260C] to fix the GH-D SW (L) circuit board. (Fig.11)

10-5 Tighten the ten (10) screws marked [260D] to fix the GH-D SW (H) circuit board. (Fig.11)

* Install the circuit boards in the keyboard assembly so that the hooks hold it as shown in figure 19.

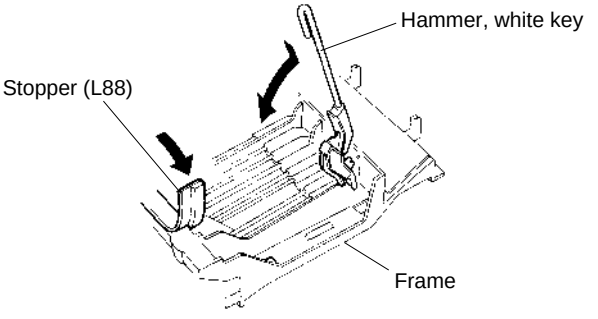

(Fig. 16)

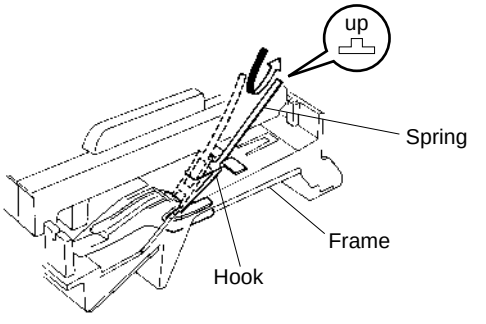

(Fig. 17)

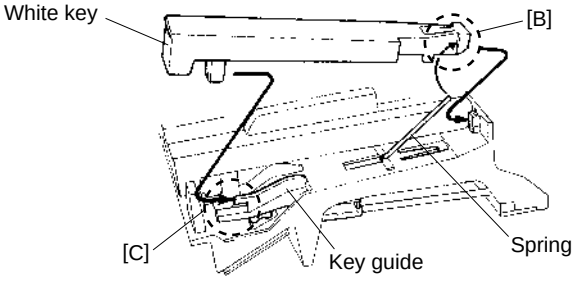

(Fig. 18)

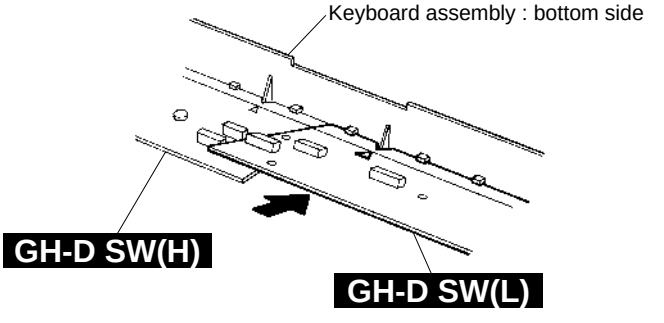

(Fig. 19)

■ LSI PIN DESCRIPTION

● **HG73C205AFD** (XU947C00) **SWX00B** TONE GENERATOR

DM: IC7, 8

PIN NO.	NAME	I/O	FUNCTION	PIN NO.	NAME	I/O	FUNCTION
1	ICN	I	Initial clear	85	CMA3	O	Program address bus
2	RFCLKI	I	PLL Clock	86	CMA8	O	Program address bus
3	TM2	I	PLL Control	87	CMA2	O	Program address bus
4	AVDD_PLL		Power supply	88	CRD	O	read signal
5	AVSS_PLL		Ground	89	CMA1	O	Program address bus
6	MODE0	I	SWX dual mode	90	CUB	O	high byte effective signal
7	VCC7		Power supply	91	VCC91		Power supply
8	GND8		Ground	92	GHND92		Ground
9	XIN	I	crystal oscillator	93	CS1	O	CS signal
10	XOUT	O	crystal oscillator	94	CMA0	O	Program address bus
11	MODE1	I	SWX separate mode	95	CLB	O	low byte effective signal
12	TEST0	I	TEST pin	96	CMA12	O	Program address bus
13	TESTON	I	TEST pin	97	CMA11	O	Program address bus
14	AN0-P40	I	A/D converter	98	CMA10	O	Program address bus
15	AN1-P41	I	A/D converter	99	CMA9	O	Program address bus
16	AN2-P42	I	A/D converter	100	GND100		Ground
17	AN3-P43	I	A/D converter	101	CWE	O	write signal
18	AVDD_AN		Power supply	102	CMA16	O	Program address bus
19	AVSS_AN		Ground	103	CMA15	O	Program address bus
20	TXD0	O	for MIDI or TO-HOST	104	CMA14	O	Program address bus
21	TXD1	O	for MIDI	105	CMA13	O	Program address bus
22	EXCLK	I	Crystal oscillator	106	CMD8	I/O	Program memory Data bus
23	SMD11	I/O	Wave memory data bus	107	CMD7	I/O	Program memory Data bus
24	SMD4	I/O	Wave memory data bus	108	CMD9	I/O	Program memory Data bus
25	SMD3	I/O	Wave memory data bus	109	CMD6	I/O	Program memory Data bus
26	SMD12	I/O	Wave memory data bus	110	CMD10	I/O	Program memory Data bus
27	SMD10	I/O	Wave memory data bus	111	CMD5	I/O	Program memory Data bus
28	SMD5	I/O	Wave memory data bus	112	CMD11	I/O	Program memory Data bus
29	SMD2	I/O	Wave memory data bus	113	CMD4	I/O	Program memory Data bus
30	SMD13	I/O	Wave memory data bus	114	CMD12	I/O	Program memory Data bus
31	SMD9	I/O	Wave memory data bus	115	CMD3	I/O	Program memory Data bus
32	SMD6	I/O	Wave memory data bus	116	CMD13	I/O	Program memory Data bus
33	SMD1	I/O	Wave memory data bus	117	CMD2	I/O	Program memory Data bus
34	SMD14	I/O	Wave memory data bus	118	CMD14	I/O	Program memory Data bus
35	VCC35		Power supply	119	VCC119		Power supply
36	GND36		Ground	120	GND115		Ground
37	SMD8	I/O	Wave memory data bus	121	CMD1	I/O	Program memory Data bus
38	SMD7	I/O	Wave memory data bus	122	CMD15	I/O	Program memory Data bus
39	SMD0	I/O	Wave memory data bus	123	CMD0	I/O	Program memory Data bus
40	SMD15	I/O	Wave memory data bus	124	CMA21	O	Program address bus
41	SOE	O	read signal	125	PDT15	I/O	SWX access data bus
42	SWE	O	write signal	126	PDT14	I/O	SWX access data bus
43	SRAS	O	RAS signal	127	PDT13	I/O	SWX access data bus
44	SCAS	O	CAS signal	128	PDT12	I/O	SWX access data bus
45	REFRESH	O	REFRESH signal	129	PDT11	I/O	SWX access data bus
46	CS0	O	CS signal	130	PDT10	I/O	SWX access data bus
47	SMA0	O	Memory address bus	131	PDT9	I/O	SWX access data bus
48	SMA16	O	Memory address bus	132	PDT8	I/O	SWX access data bus
49	VCC49		Power supply	133	VCC133		Power supply
50	GND50		Ground	134	GND134		Ground
51	SMA1	O	Memory address bus	135	PDT7	I/O	SWX access data bus
52	SMA15	O	Memory address bus	136	PDT6	I/O	SWX access data bus
53	SMA2	O	Memory address bus	137	PDT5	I/O	SWX access data bus
54	SMA14	O	Memory address bus	138	PDT4	I/O	SWX access data bus
55	SMA3	O	Memory address bus	139	PDT3	I/O	SWX access data bus
56	SMA13	O	Memory address bus	140	PDT2	I/O	SWX access data bus
57	SMA4	O	Memory address bus	141	PDT1	I/O	SWX access data bus
58	SMA12	O	Memory address bus	142	PDT0	I/O	SWX access data bus
59	SMA5	O	Memory address bus	143	VCA143		Power supply
60	GND60		Ground	144	GND144		Ground
61	VCC61		Power supply	145	PAD2	I	SWX access address bus
62	SMA11	O	Memory address bus	146	PAD1	I	SWX access address bus
63	SMA6	O	Memory address bus	147	PAD0	I	SWX access address bus
64	SMA10	O	Memory address bus	148	VCC148		Power supply
65	SMA7	O	Memory address bus	149	GND149		Ground
66	SMA9	O	Memory address bus	150	PCS	I	Chip select
67	SMA17	O	Memory address bus	151	PWR	I	write enable
68	SMA8	O	Memory address bus	152	PRD	I	read enable
69	SMA18	O	Memory address bus	153	RXD0	I	for Midi or TO-HOST
70	SMA19	O	Memory address bus	154	RXD1	I	for Midi or Key scan
71	SMA20	O	Memory address bus	155	SCLKI	I	EXT Clock
72	SMA21	O	Memory address bus	156	ADIN	I	A/D converter
73	SMA22	O	Memory address bus	157	ADLR	O	A/D converter LR clock
74	SMA23	O	Memory address bus	158	DO0	O	DAC
75	CMA20	O	Program address bus	159	DO1	O	DAC
76	CMA19	O	Program address bus	160	SYSCLK	O	1/2 clock
77	VCC77		Power supply	161	VCC161		Power supply
78	GND78	O	Ground	162	GND162		Ground
79	CMA18	O	Program address bus	163	WCLK	O	for DAC LR clock
80	CMA17	O	Program address bus	164	QCLK	O	1/12 clock
81	CMA5	O	Program address bus	165	BCLK	O	IIS-DAC clock
82	CMA6	O	Program address bus	166	SYI	I	Synch signal
83	CMA4	O	Program address bus	167	IRQ0	I	Interrupt request
84	CMA7	O	Program address bus	168	NMI	I	Interrupt request

● **PCM69AU TE2** (XU970A00) **DAC** (Digital Analog Converter)

DM: IC10

PIN NO.	NAME	I/O	FUNCTION	PIN NO.	NAME	I/O	FUNCTION
1	+VCC		Analog power supply	11	D-GND		Digital ground
2	VCOM-L		V-common, channel L	12	TP2		Test pin
3	NC		No connection	13	DATA-R	I	Data input, channel R
4	IOUT-L	O	Current output, channel L	14	BCK	I	Bit clock
5	SERVO DC		Servo filter	15	SYS CLK	I	System clock
6	RE DC		Reference filter	16	WDCK	I	Word clock
7	IOUT-R		Current output, channel R	17	DATA-L	I	Data input, channel L
8	NC		No connection	18	TP3		Test pin
9	VCOM-R	O	V-common, channel R	19	TP1		Test pin
10	A-GND		Analog ground	20	+VDD		Digital power supply

■ IC BLOCK DIAGRAM

● **TC74HC00AF** (XD655A00)
Quad 2 Input NAND
DM: IC002

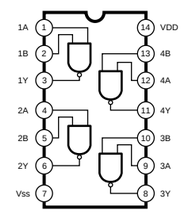

● **TC74HC138AF** (XM970A00)
3 to 8 Demultiplexer
DM: IC006

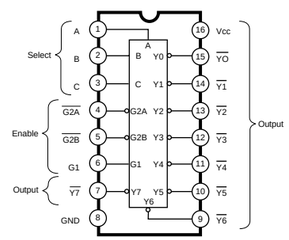

● **SN75C1168NSR** (XU073A00)
Line Driver/Receiver
JACK: IC002

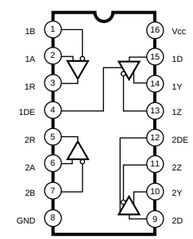

● **SC7SU04FEL** (XI348A00)
Inverter Gate
JACK: IC001

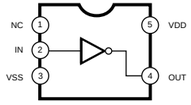

● **µPC4570G2** (XF291A00)
Dual Operational Amplifier
DM: IC013, 022

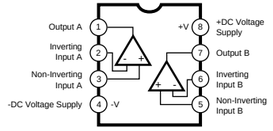

● **TD62083F-TP1** (XN153A00)
8ch Driver Array
DM: IC004

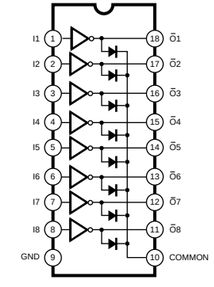

■ CIRCUIT BOARDS

● DM Circuit Board

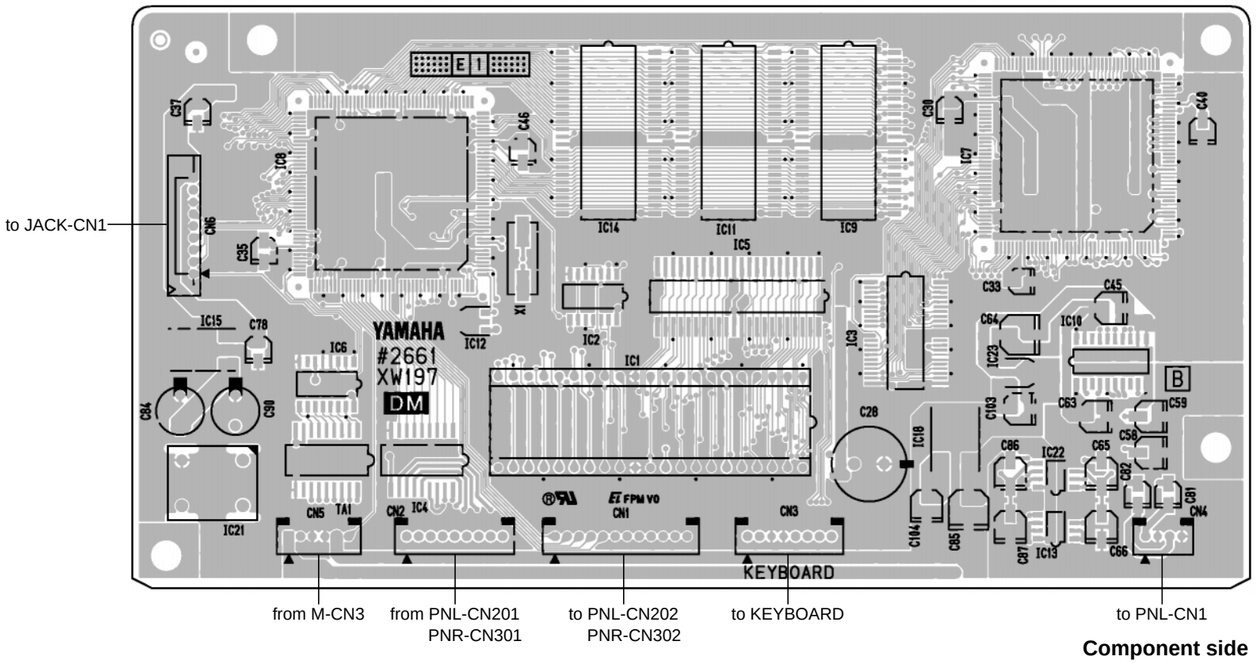

Component side

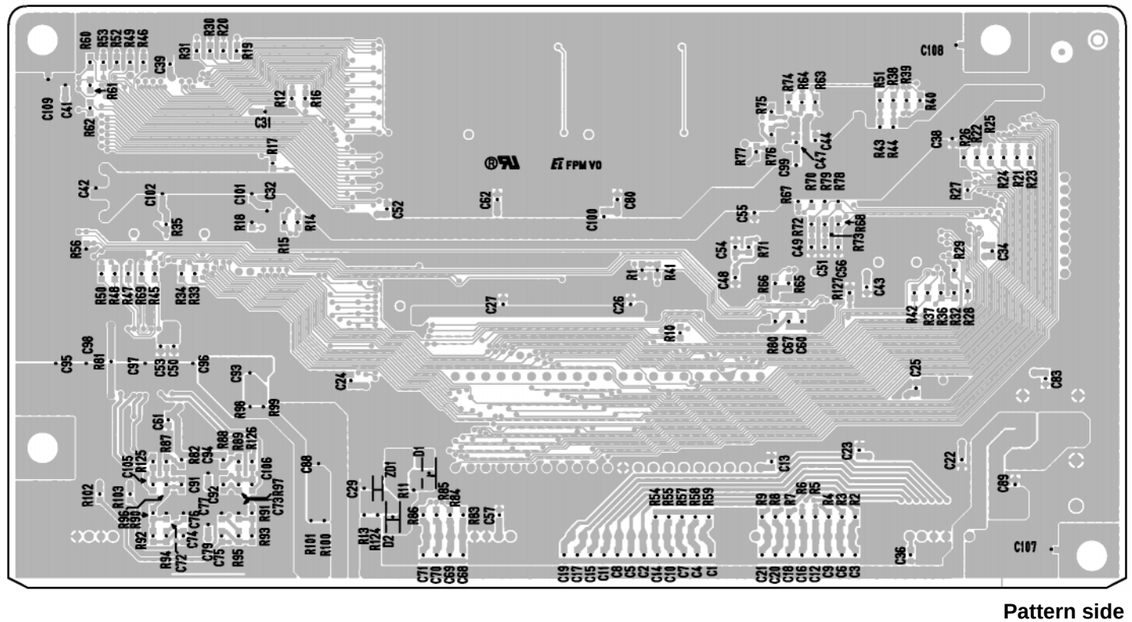

Pattern side

● JACK Circuit Board

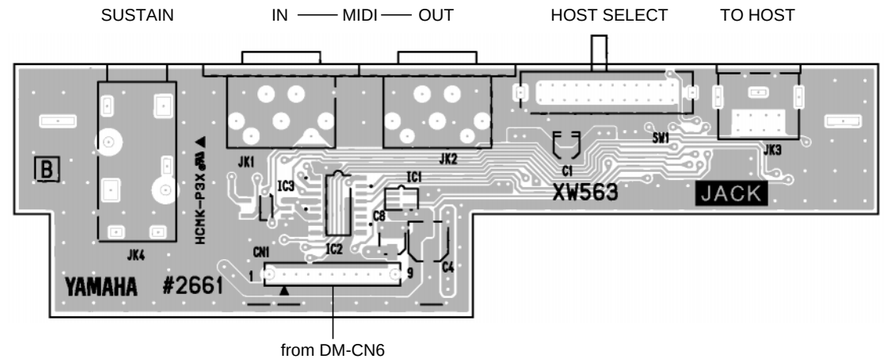

Component side

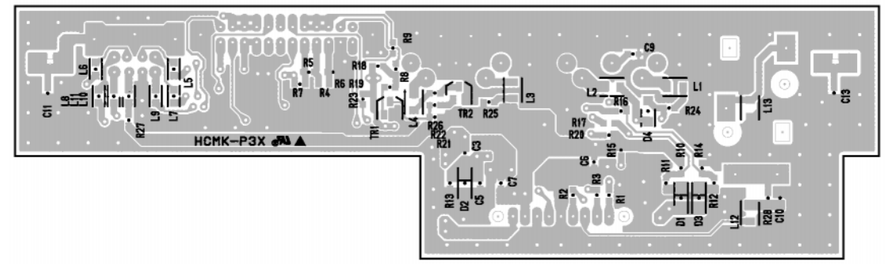

Pattern side

Note: See parts list for details of circuit board component parts.

DM: 2NA-V445950⚠
JACK: 2NA-V445980

● PNL Circuit Board

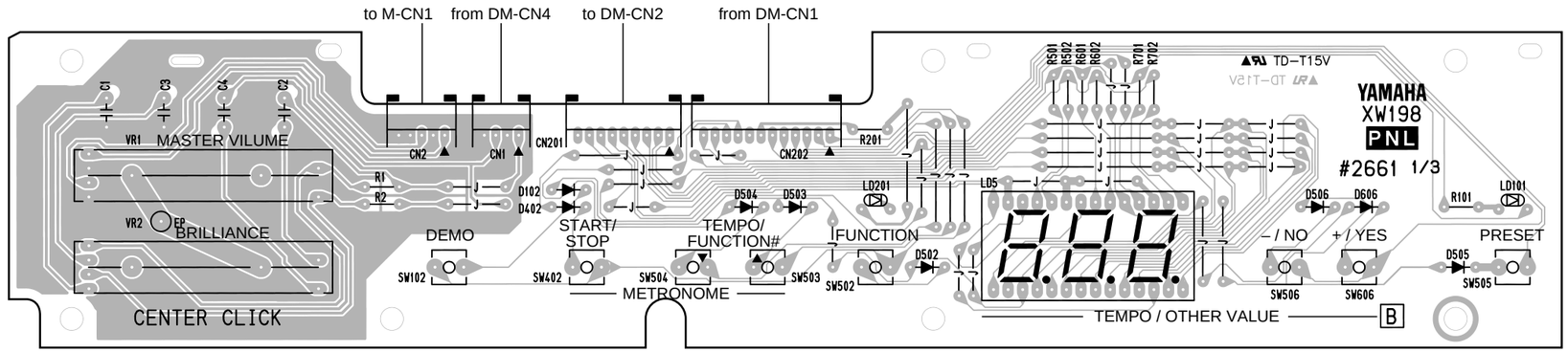

Component side

● SW Circuit Board

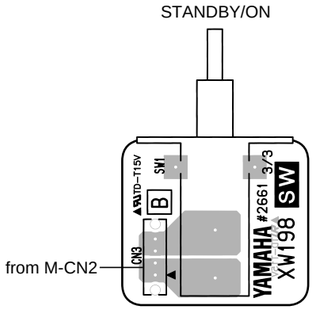

Component side

● PNR Circuit Board

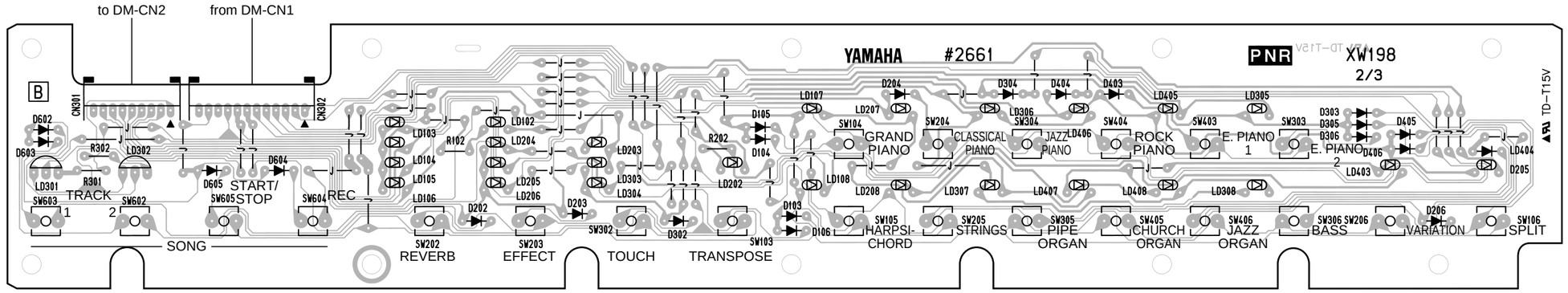

Component side

● M Circuit Board

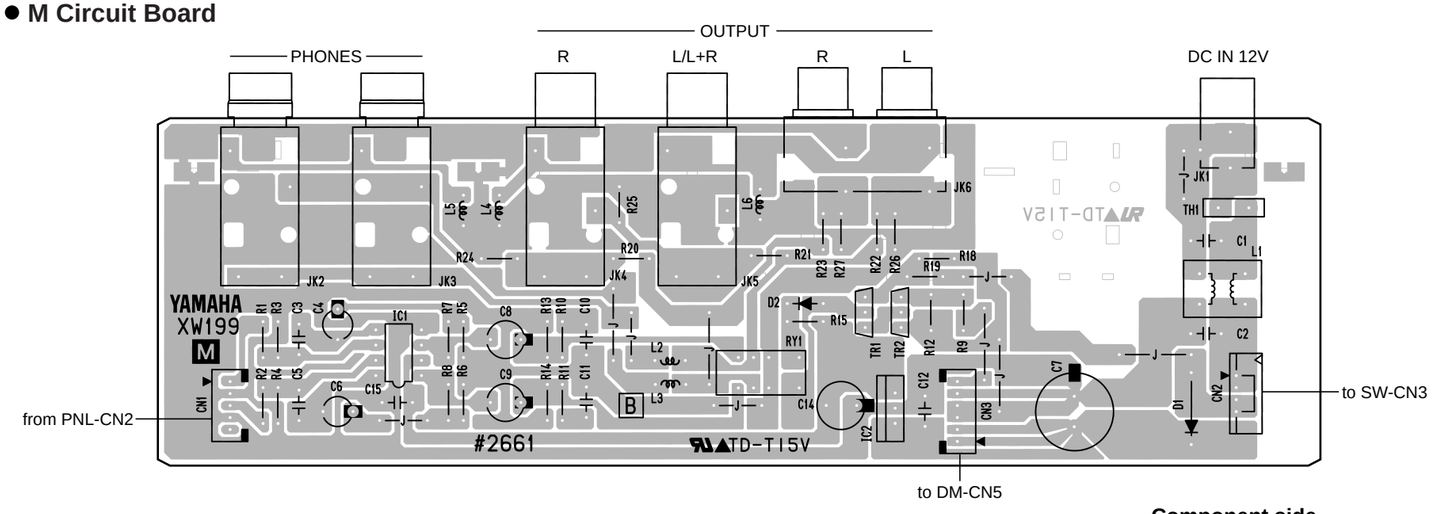

Component side

PNL, PNR, SW: 2NA-V445960⚠
M: 2NA-V445970⚠

■ TEST PROGRAM

1. Preparation

To check the unit using the test program, the following measuring instruments and jigs are required:

AC Adapter (PA-3B)
Level meter (IHF-C curve)
Frequency counter
Note: Impedance must be 1 MΩ or above.
Use stereo plugs, and connect a 33 Ω load at the [PHONES] terminal.
Sustain Pedal (FC4)
MIDI cable

Unit settings:

[MASTER VOLUME]:	Maximum
Tone:	PIANO
[REVERB]:	OFF
[AUX OUT] terminal:	Connect the measuring plug to all terminals. (10 kΩ load)
[PHONES] terminal:	Connect a 33 Ω load at the PHONES L or PHONES R. The measurment plug is inserted into only one receptacle.

2. How to enter the Test Program

While pressing the [C2#], [F2] and [G2#] keys, turn on the [STANDBY/ON] switch.

3. Proceeding through the Test Program

Once inside the test program, the 7-seg. LED will display [rSr].
To select the program number, use the [TEMPO/FUNCTION ▲/▼] buttons.
To start the test, press the [START/STOP ▶/■] button. To select the next program number, press the [START/STOP ▶/■] button again.
When the test result is ok, the 7-seg. LED will display [PAS].
When the test result is no good, the 7-seg. LED will display [nG]. To select the next program number, press the [DEMO] button.
When the test result of the “MIDI CHECK” or “TO HOST CHECK” is no good, turn off the power switch and re-enter the test program.

Test Items

No.	7-seg. LED for Each Test		Test Functions and Judgment Criteria
1	r01	P02, U1.0	The 7-seg. LED displays the ROM version (Program, Wave).
2	r02	⇨PAS or nG	Checks all ROMs The 7-seg. LED will display the test result.
3	r03	⇨PAS or nG	Checks all RAMs that are connected to the CPU The 7-seg. LED will display the test result.
4	r04	⇨PAS or nG	Checks the Wave ROM The 7-seg. LED will display the test result.
11	r11	rG1	Produces the sine wave sequence by changing the channels (1 ch – 32 ch) in order from A0 to C6. When a voice switch is pressed, the tone of the voice will sound. After autoscaling has finished, individual keys can be played. (If playing two or more keys simultaneously, the first pressed key has priority to make a sound.)
12	r12	rG2	Produces the sine wave sequence by changing the channels (33 ch – 64 ch) in order from A0 to C6. When a voice switch is pressed, the tone of the voice will sound. After autoscaling has finished, individual keys can be played. (If playing two or more keys simultaneously, the first pressed key has priority to make a sound.)
13	r13	PIr	Connect the frequency counter to the PHONES jacks. Check the frequency (440 Hz +/- 0.22 Hz).
14	r14	OPr	Check the output level (R) (1 kHz). Connect the level meter to the PHONES jacks. (33 Ω load) PHONES L: Less than -35 dBm PHONES R: -16 dBm +/-2 dB Connect the level meter to the OUTPUT jack. (10 kΩ load) OUTPUT L: Less than -35 dBm OUTPUT R: -7 dBm +/-2 dB
15	r15	OPL	Check output level (L) (1 kHz). Connect the level meter to the PHONES jacks. (33 Ω load) PHONES L: -16 dBm +/-2 dB PHONES R: Less than -35 dBm Connect the level meter to the OUT PUT jack. (10 kΩ load) OUT PUT L: -7 dBm +/-2 dB OUT PUT R: Less than -35 dBm
16	r16	E9L	For factory test use only. (outputs the C1 sine wave tone)
17	r17	E9M	For factory test use only. (outputs the C4 sine wave tone)
18	r18	E9H	For factory test use only. (outputs the C7 sine wave tone)
19	r19	dA	Check the D/A converter noise level. Play a note to check that there is no noise.
20	r20	S01-S30 ⇨PAS or nG	Check the switches and the LEDs on the panel. Press the DEMO switch, and then press the buttons in order whitch next to DEMO switch. A pre-assighned note is output when the switch is pressed. (With some switches, the corresponding LED will light up.) The 7-seg. LED will display the test result.
21	r21		Check that all panel LEDs are lit.
31	r31	PE1 ⇨PAS or nG	Check that the C3 note sounds when pushing the pedal and that the C4 note sounds when releasing the pedal; the 7-seg. LED should display the test results.
37	r37	⇨PAS or nG	Afer connecting a MIDI cable to the MIDI IN and MIDI OUT, execute the test. Check that the C4 note sounds. The test result will appear on the 7-seg. LED.
38	r38	nAC, PC1, PC2, MId ⇨PAS or nG	Connect pin 3 to pin 5 and pin 6 to pin 8 of the TO HOST terminal, and execute the test. Check that the following notes sound when changing the HOST SELECT switch position according to the 7-seg. LED indication. Mac position: note C5; PC1 position: note C4; PC2 position: note C3
41	r41	⇨PAS or nG	Checks the Program ROM and Data ROM The 7-seg. LED will display the test result.
42	r42	⇨PAS or nG	Checks all RAM, that are connected to CPU The 7-seg. LED will display the test result.
43	r43		For factory test use only.
46	r46		For factory test use only.
47	r47	FAC	All RAMs are initialized and reset to the factory preset data when executing this test.
48	r48		Exit from the test program when executing this test.

Note: 0 dbm = 0.775 V

INITIALIZE

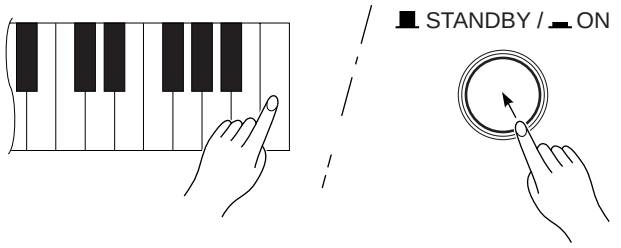

All dual mode, split mode, reverb, effect, touch sensitivity, tuning settings, and the settings affected by the Backup Functions can be restored to their original factory preset values by holding the C7 key (rightmost key on the keyboard) while turning the **[STANDBY/ON]** switch ON. This also erases all user song recorder data, and sets all Backup on/off settings (F9) to “OFF”.

YAMAHA [Electronic Piano] Date: 7/31, 1999
Model: P-80 MIDI Implementation Chart Version: 1.1

Function...		Transmitted	Recognized	Remarks
Basic	Default	1	1	
Channel	Changed	1 - 16	1 - 16	
Mode	Default	3	1 *1	Poly Mode only
	Messages	X	X	
	Altered	**********	X	
Note Number	: True voice	9 - 120 **********	0 - 127 21 - 108	
Velocity	Note on	O 9nH, v = 1 - 127	O v = 1 - 127	
	Note off	X 9nH, v = 0	X	
After Touch	Key's	X	X	
	Ch's	O	X	
Pitch Bender		X	X	
Control Change	0, 32	O	O	Bank Select
	07	X	O	Volume
	11	X	O	Expression
	64	O	O	Damper
	66	X	O	Sostenuto
	67	X	O	Soft pedal
	91	O	O	Reverb Depth
	94	O	O	Effect Depth
	120	X	O	All sounds off
	121	X	O	Reset All Controllers
Program Change	: True #	O **********	O	
System Exclusive		O	O	
System Common	: Song Position	X	X	
	: Song Select	X	X	
	: Tune	X	X	
System Real Time	: Clock	O	O	
	: Commands	O	O	
Aux Messages	: Local ON/OFF	X	O	
	: All Notes Off	O	O (123~127)	
	: Active Sense	O	O	
	: Reset	X	X	

Notes : *1 = Recieve Mode is always multi timbre and Poly mode.

Mode 1: OMNI ON, POLY Mode 2: OMNI ON, MONO O : Yes
Mode 3: OMNI OFF, POLY Mode 4: OMNI OFF, MONO X : No

MIDI DATA FORMAT

If you're already very familiar with MIDI, or are using a computer to control your music hardware with computer-generated MIDI messages, the data provided in this section can help you to control the P-80.

1. NOTE ON/OFF

Data format: [9nH] -> [kk] -> [vv]

9nH = Note ON/OFF event (n = channel number)
kk = Note number (Transmit: 09H ~ 78H = A-2 ~ C8 / Receive: 00H ~ 7FH = C-2 ~ G8)*
vv = Velocity (Key ON = 01H ~ 7FH, Key OFF = 00H)

Data format: [8nH] -> [kk] -> [vv] (reception only)

8nH = Note OFF event (n = channel number)
kk = Note number: 00H ~ 7FH = C-2 ~ G8
vv = Velocity

* If received value exceeds the supported range for the selected voice, the note is adjusted by the necessary number of octaves.

2. CONTROL CHANGE

Data format: [BnH] -> [cc] -> [vv]

BnH = Control change (n = channel number)
cc = Control number
vv = Data Range

(1) Bank Select

ccH	Parameter	Data Range (vvH)
00H	Bank Select MSB	00H:Normal
20H	Bank Select LSB	00H...7FH

Bank selection processing does not occur until receipt of next Program Change message.

(2) Main Volume (reception only)

ccH	Parameter	Data Range (vvH)
07H	Volume MSB	00H...7FH

(3) Expression

ccH	Parameter	Data Range (vvH)
0BH	Expression MSB	00H...7FH

(4) Damper

ccH	Parameter	Data Range (vvH)
40H	Damper MSB	00H...7FH

(5) Sostenuto (reception only)

ccH	Parameter	Data Range (vvH)
42H	Sostenuto	00H-3FH:off, 40H-7FH:on

(6) Soft Pedal (reception only)

ccH	Parameter	Data Range (vvH)
43H	Soft Pedal	00H-3FH:off, 40H-7FH:on

(7) Effect1 Depth (Reverb Send Level)

ccH	Parameter	Data Range (vvH)
5BH	Effect1 Depth	00H...7FH

Adjusts the reverb send level.

(8) Effect4 Depth (Variation Effect Send Level)

ccH	Parameter	Data Range (vvH)
5EH	Effect4 Depth	00H...7FH

3. MODE MESSAGES

Data format: [BnH] -> [cc] -> [vv]

BnH = Control event (n = channel number)
cc = Control number
vv = Data Range

(1) All Sound Off

ccH	Parameter	Data Range (vvH)
78H	All Sound Off	00H

Switches off all sound from the channel. Does not reset Note On and Hold On conditions established by Channel Messages.

(2) Reset All Controllers

ccH	Parameter	Data Range (vvH)
79H	Reset All Controllers	00H

Resets controllers as follows.

Controller	Value
Expression	127 (max)
Damper Pedal	0 (off)
Sostenuto	0 (off)
Soft Pedal	0 (off)

(3) Local Control (reception only)

ccH	Parameter	Data Range (vvH)
7AH	Local Control	00H (off), 7FH (on)

(4) All Notes Off

ccH	Parameter	Data Range (vvH)
7BH	All Notes Off	00H

Switches OFF all the notes that are currently ON on the specified channel. Any notes being held by the damper or sostenuto pedal will continue to sound until the pedal is released.

(5) Omni Off (reception only)

ccH	Parameter	Data Range (vvH)
7CH	Omni Off	00H

Same processing as for All Notes Off.

(6) Omni On (reception only)

ccH	Parameter	Data Range (vvH)
7DH	Omni On	00H

Same processing as for All Notes Off.

(7) Mono (reception only)

ccH	Parameter	Data Range (vvH)
7EH	Mono	00H

Same processing as for All Sound Off.

(8) Poly (reception only)

ccH	Parameter	Data Range (vvH)
7FH	Poly	00H

Same processing as for All Sound Off.

- When control change reception is turned OFF in the Function mode, control change data will not be transmitted or received except for Bank Select and Mode messages.
- Local on/off, OMNI on/off are not transmitted. (The appropriate note off number is supplied with "All Note Off" transmission).
- When a voice bank MSB/LSB is received, the number is stored in the internal buffer regardless of the received order, then the stored value is used to select the appropriate voice when a program change message is received.
- The Multi-timbre and Poly modes are always active. No change occurs when OMNI ON, OMNI OFF, MONO, or POLY mode messages are received.

4. PROGRAM CHANGE

Data format: [CnH] -> [ppH]

CnH = Program event (n = channel number)

ppH = Program change number

P.C.#=Program Change number

	Normal Voice			VARIATION Voice		
	MSB	LSB	P.C.#	MSB	LSB	P.C.#
GRAND PIANO	0	112	0	0	113	0
CLASSICAL PIANO	0	114	0	0	115	0
JAZZ PIANO	0	112	1	0	113	1
ROCK PIANO	0	114	1	0	115	1
E.PIANO 1	0	112	5	0	112	88
E.PIANO 2	0	112	4	0	118	4
HARPSICHORD	0	112	6	0	115	6
STRINGS	0	112	48	0	113	49
PIPE ORGAN	0	112	19	0	113	19
CHURCH ORGAN	0	115	19	0	114	19
JAZZ ORGAN	0	112	16	0	113	16
BASS	0	112	32	0	114	32

- When program change reception is turned OFF in the Function mode, no program change data is transmitted or received. Also, Bank MSB/LSB is not transmitted or received.

5. SYSTEM REALTIME MESSAGES

[rrH]

F8H: Timing clock

FAH: Start

FCH: Stop

FEH: Active sensing

Data	Transmission	Reception
F8H	Transmitted every 96 clocks	Received as 96-clock tempo timing when MIDI clock is set to External
FAH	Recorder start	Recorder start Not received when the MIDI clock is set to Internal.
FCH	Recorder stop	Recorder stop Not received when the MIDI clock is set to Internal.
FEH	Transmitted every 200 milliseconds	If a signal is not received via MIDI for more than 400 milliseconds, the same processing will take place for All Sound Off, All Notes Off and Reset All Controllers as when those signals are received.

- Caution: If an error occurs during MIDI reception, the Damper, Sostenuto, and Soft effects for all channels are turned off and an All Note Off occurs.

6. SYSTEM EXCLUSIVE MESSAGES (Yamaha MIDI Format)

Panel Data Transmit

Data format: [F0H] -> [43H] -> [0nH] -> [7CH] -> ... -> [F7H]

F0H, 43H, 0nH, 7CH (n: channel number)
00H, 2CH (data length)
43H, 4CH, 20H, 20H (CL)
43H, 4CH, 50H, 27H, 39H, 38H (P-80)
30H, 30H (version x, y)
[PANEL DATA]
[CHECK SUM (1byte)] = 0-(43H+4CH+20H+.....+Data end)
F7H

- Panel data send requests cannot be received.

7. SYSTEM EXCLUSIVE MESSAGES (Universal System Exclusive)

(1) Universal Realtime Message

Data format: [F0H] -> [7FH] -> [XnH] -> [04H] -> [01H] -> [llH] -> [mmH] -> [F7H]

ccH	Parameter	Data Range (vvH)
7AH	Local Control	00H (off), 7FH (on)

MIDI Master Volume

- Simultaneously changes the volume of all channels.
- When a MIDI master volume message is received, the volume only has affect on the MIDI receive channel, not the panel master volume.

F0H = Exclusive status
7FH = Universal Realtime
7FH = ID of target device
04H = Sub-ID #1=Device Control Message
01H = Sub-ID #2=Master Volume
llH = Volume LSB
mmH = Volume MSB
F7H = End of Exclusive

or

F0H = Exclusive status
7FH = Universal Realtime
XnH = When n is received n=0~F, whichever is received.
X = don't care
04H = Sub-ID #1=Device Control Message
01H = Sub-ID #2=Master Volume
llH = Volume LSB
mmH = Volume MSB
F7H = End of Exclusive

(2) Universal Non-Realtime Message (GM On)

General MIDI Mode On

Data format: [F0H] -> [7EH] -> [XnH] -> [09H] -> [01H] -> [F7H]

F0H = Exclusive status
7EH = Universal Non-Realtime
7FH = ID of target device
09H = Sub-ID #1=General MIDI Message
01H = Sub-ID #2=General MIDI On
F7H = End of Exclusive

or

F0H = Exclusive status
7EH = Universal Non-Realtime
XnH = When received, n=0~F.
X = don't care
09H = Sub-ID #1=General MIDI Message
01H = Sub-ID #2=General MIDI On
F7H = End of Exclusive

When the General MIDI mode ON message is received, the MIDI system will be reset to its default settings.
This message requires approximately 50ms to execute, so sufficient time should be allowed before the next message is sent.

8. SYSTEM EXCLUSIVE MESSAGES (XG Standard)

(1) XG Native Parameter Change

Data format: [F0H] -> [43H] -> [1nH] -> [4CH] -> [hhH] -> [mmH] -> [llH] -> [ddH] -> [F7H]

F0H = Exclusive status
43H = YAMAHA ID
1nH = When received, n=0~F.
When transmitted, n=0.
4CH = Model ID of XG
hhH = Address High
mmH = Address Mid
llH = Address Low
ddH = Data
|
F7H = End of Exclusive

Data size must match parameter size (2 or 4 bytes).
When the XG System On message is received, the MIDI system will be reset to its default settings.
The message requires approximately 50ms to execute, so sufficient time should be allowed before the next message is sent.

(2) XG Native Bulk Data (reception only)

Data format: [F0H] -> [43H] -> [0nH] -> [4CH] -> [aaH] -> [bbH] -> [hhH] -> [mmH] -> [llH] -> [ddH] ->...-> [ccH] -> [F7H]

F0H Exclusive status
43H YAMAHA ID
0nH When received, n=0~F.
When transmitted, n=0.
4CH Model ID of XG
aaH ByteCount
bbH ByteCount
hhH Address High
mmH Address Mid
llH Address Low
ddH Data
| |
| |
ccH Check sum
F7H End of Exclusive

- For information about the related XG parameters, refer to Tables 1, 2 and 3 below.
- Receipt of the XG SYSTEM ON message causes reinitialization of relevant parameters and Control Change values. Allow sufficient time for processing to execute (about 50 msec) before sending the P-80 another message.
- XG Native Parameter Change message may contain two or four bytes of parameter data (depending on the parameter size).
- For information about the Address and Byte Count values, refer to Table 1 below. Note that the table's Total Size value gives the size of a bulk block. Only the top address of the block (00H, 00H, 00H) is valid as a bulk data address.

9. SYSTEM EXCLUSIVE MESSAGES (Clavinova MIDI Format)

Data format: [F0H] -> [43H] -> [73H] -> [xxH] -> [nnH] -> [F7H]

F0H = Exclusive status
43H = Yamaha ID
73H = Clavinova ID
xxH = Product ID (P-80 ID: 66H or CLP common ID: 01H)
nnH = Substatus

nn	Control
02H	Internal MIDI clock
03H	External MIDI clock
06H	Bulk Data (the bulk data follows 06H)

F7H = End of Exclusive
*When nn=02H or 03H, Clavinova common ID (01H) is recognized as well as 66H or 01H.

BULK DUMP FORMAT

F0H, 43H, 73H
66H =P-80 ID
06H =Bulk ID
05H =Sequence data
0nH, 0nH, 0nH, 0nH, 0nH, 0nH, 0nH, 0nH =Data length
[BULK DATA] =
[CHECK SUM (1byte)] = 0-sum (BULK DATA)
F7H = End of Exclusive

10. SYSTEM EXCLUSIVE MESSAGES (Special Control)

Data format: [F0H] -> [43H] -> [73H] -> [66H] -> [11H] -> [0nH] -> [ccH] -> [vvH] -> [F7H]

F0H = Exclusive status
43H = Yamaha ID
73H = Clavinova ID
66H = P-80 ID
11H = Special control
0nH = Control MIDI change (n=channel number)
cc = Control number
vv = Value
F7H = End of Exclusive

Control	0n	ccH	vvH
Split Point	Always 00H	14H	14H : Split Key Number
Metronome	Always 00H	1BH	00H : off 01H : – 02H : 2/4 03H : 3/4 04H : 4/4 06H : 6/4 7FH : No accent
Damper Level	ch: 00H-0FH	3DH	(Sets the Damper Level for each channel) 00H-7FH
Channel Detune for	ch: 00H-0FH	43H	(Sets the Detune value each channel) 00H-7FH
Voice Reserve	ch: 00H-0FH	45H	00H : Reserve off 7FH : on*

* When Volume, Expression is received for Reserve On, they will be effective from the next Key On. Reserve Off is normal.

11. SYSTEM EXCLUSIVE MESSAGES (Others)

Data format: [F0H] -> [43H] -> [1nH] -> [27H] -> [30H] -> [00H] -> [00H] -> [mmH] -> [llH] -> [ccH] -> [F7H]

Master Tuning (XG and last message priority) simultaneously changes the pitch of all channels.

F0H = Exclusive Status
43H = Yamaha ID
1nH = When received, n=0~F.
When transmitted, n=0.
27H = Model ID of TG100
30H = Sub ID
00H =
00H =
mmH = Master Tune MSB
llH = Master Tune LSB
ccH = don't care (under 7FH)
F7H = End of Exclusive

- This data will not be reset by GM SYSTEM ON or XG SYSTEM ON message.

< Table 1>

MIDI Parameter Change table (SYSTEM)

Address (H)	Size (H)	Data (H)	Parameter	Description	Default value (H)
00 00 00	4	020C - 05F4(*1)	MASTER TUNE	-50 - +50[cent]	00 04 00 00
01				1st bit 3 - 0 Æ bit 15 - 12	400
02				2nd bit 3 - 0 Æ bit 11 - 8	
03				3rd bit 3 - 0 Æ bit 7 - 4	
				4th bit 3 - 0 Æ bit 3 - 0	
04	1	00 - 7F	MASTER VOLUME	0 - 127	7F
05	1	—	—		
06	1	34 - 4C(*2)	TRANSPOSE	-12 - +12[semitones]	40
7E		00	XG SYSTEM ON	00=XG sytem ON	
7F		00	RESET ALL PARAMETERS	00=ON (receive only)	
TOTAL SIZE	07				

*1: Values lower than 020CH select -50 cents. Values higher than 05F4H select +50 cents.
*2: Values from 28H through 33H are interpreted as -12 through -1. Values from 4DH through 58H are interpreted as +1 through +12.

< Table 2>

MIDI Parameter Change table (EFFECT 1)

Refer to the “Effect MIDI Map” for a complete list of Reverb, Chorus and Variation type numbers.

Address (H)	Size (H)	Data (H)	Parameter	Description	Default value (H)
02 01 00	2	00-7F	REVERB TYPE MSB	Refer to Effect MIDI Map	01(=HALL1)
		00-7F	REVERB TYPE LSB	00 : basic type	00
02 01 40	2	00-7F	VARIATION TYPE MSB	Refer to Effect MIDI Map	00(=Effect off)
		00-7F	VARIATION TYPE LSB	00 : basic type	00

• “VARIATION” refers to the EFFECT on the panel.

< Table 3>

MIDI Parameter Change table (MULTI PART)

Address (H)	Size (H)	Data (H)	Parameter	Description	Default value (H)
08 nn 11	1	00 - 7F	DRY LEVEL	0 - 127	7F

nn = Part Number

● Effect MIDI Map

REVERB

	MSB	LSB
ROOM	02H	10H
HALL 1	01H	10H
HALL 2	01H	11H
STAGE	03H	10H

EFFECT

	MSB	LSB
CHORUS	42H	10H
SYMPHONIC	44H	10H
TREMOLO	46H	10H
DELAY	05H	10H

ELECTRONIC PIANO

P-80

PARTS LIST

CONTENTS

OVERALL ASSEMBLY 2
UPPER CASE ASSEMBLY 4
KEYBOARD ASSEMBLY 6
SUSTAIN PEDAL 8
ELECTRICAL PARTS ..... 9~14

Notes : DESTINATION ABBREVIATIONS

A:	Australian model	M:	South African model
B:	British model	O:	Chinese model
C:	Canadian model	Q:	South-east Asia model
D:	German model	T:	Taiwan model
E:	European model	U:	U.S.A. model
F:	French model	V:	General export model (110 V)
H:	North European model	W:	General export model (220 V)
I :	Indonesian model	N,X:	General export model
J :	Japanese model	Y:	Export model

WARNING

Components having special characteristics are marked ⚠ and must be replaced with parts having specification equal to those originally installed.

- The numbers in " QTY " show quantities for each unit.
- The parts with " **- -** " in " PART NO. " are not available as spare parts.
- The mark " } " in the remarks column indicates that these parts are interchangeable.
- The second letter of the shaded ( ) part number is O, not zero.
- The second letter of the shaded ( ) part number is I, not one.

OVERALL ASSEMBLY

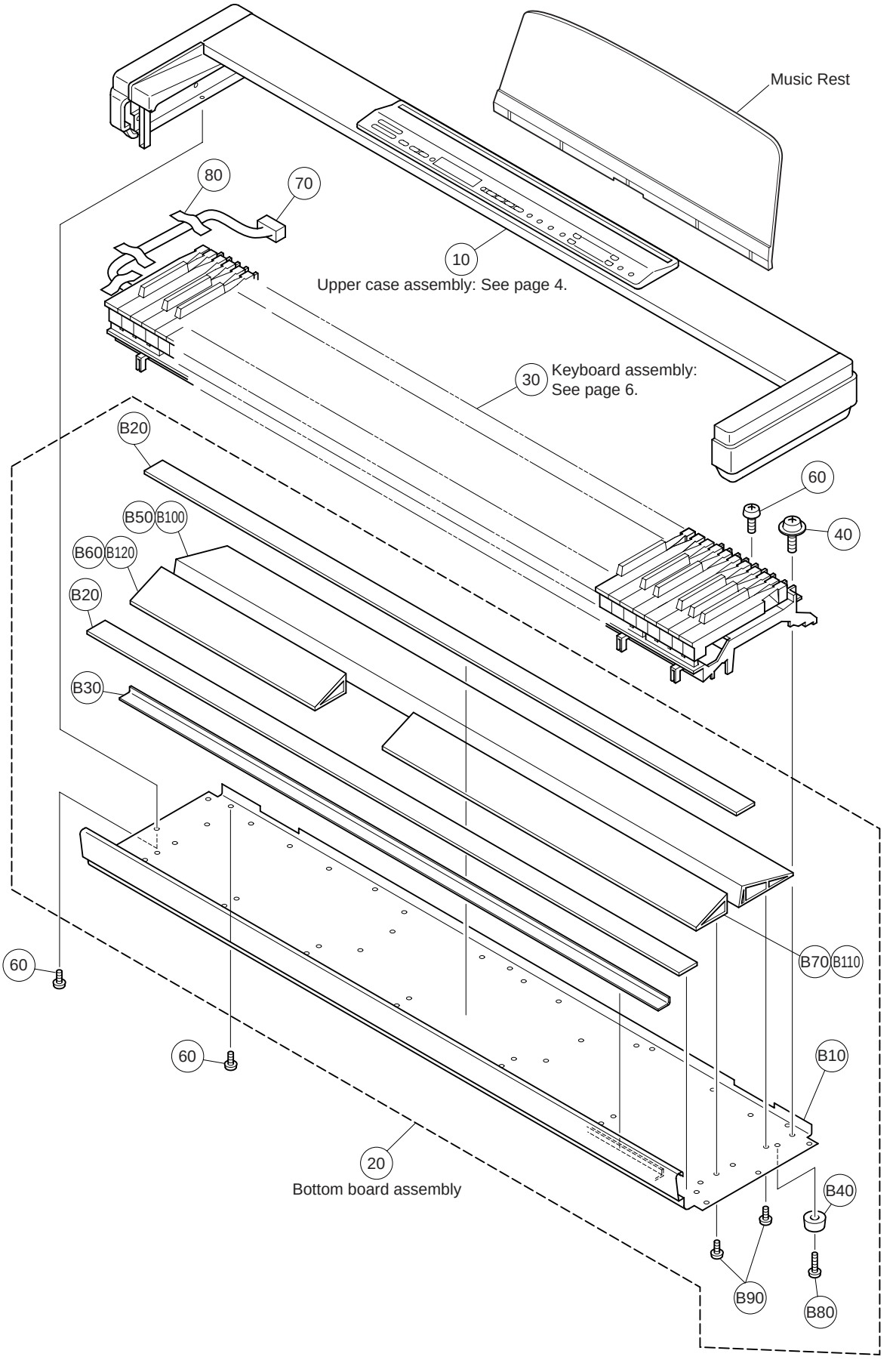

	REF NO.	PART NO.	DESCRIPTION			REMARKS	QTY	RANK
		- -	OVERALL ASSEMBLY			P-80 (V440570)		
	10	- -	Upper Case Assembly			(V440770)		
*	20	**V4407800**	Bottom Board Assembly					
	30	**VZ705400**	Keyboard Assembly	GHD A88 K6				63
*	40	**V4439900**	Pan Head Screw	PW 5.0X16MFZN2BL			9	
	60	**EG340340**	Bind Head Screw	4.0X6 MFZN2BL			14	01
	70	- -	Connector Assembly	KRD-KRD 8P-900		(VK12430)		
	80	**VP834600**	Adhesive Tape	12X50			6	02
*		**V4407800**	Bottom Board Assembly					
	B10	- -	Bottom Board			(V440730)		
	B20	- -	Cushion GH	BL		(VZ75050)	2	
	B30	- -	Cushion B	1170X20X1.5JIS2		(VZ30090)		
*	B40	**V4722000**	Foot				4	
	B50	- -	Crosspiece	A		(V447010)		
	B60	- -	Crosspiece	B		(V447020)		
	B70	- -	Crosspiece	C		(V447030)		
*	B80	**V4550100**	Flat Head Tapping Screw-B	4.0X8 MFZN2BL			4	
	B90	**EP600230**	Bind Head Tapping Screw-B	3.0X6 MFZN2BL			22	01
	B100	- -	Adhesive Tape	1225X110		(V449380)		
	B110	- -	Adhesive Tape	680X40		(V449390)		
	B120	- -	Adhesive Tape	370X40		(V449400)		
			ACCESSORIES					
*		**V4408400**	Music Rest					
		- -	Sustain Pedal	FC4		(VT37300)		
		VT368600	AC Adapter	PA-3B JP		J		09
		VT368700	AC Adapter	PA-3B UC		U		
		VT368800	AC Adapter	PA-3B CEE		E		08
*		**VT696800**	AC Adapter	PA-3B BS		B		
*		**V4880600**	Connection Cable	2P 3m RE/WH		J		

*: New Parts

RANK: Japan only

UPPER CASE ASSEMBLY

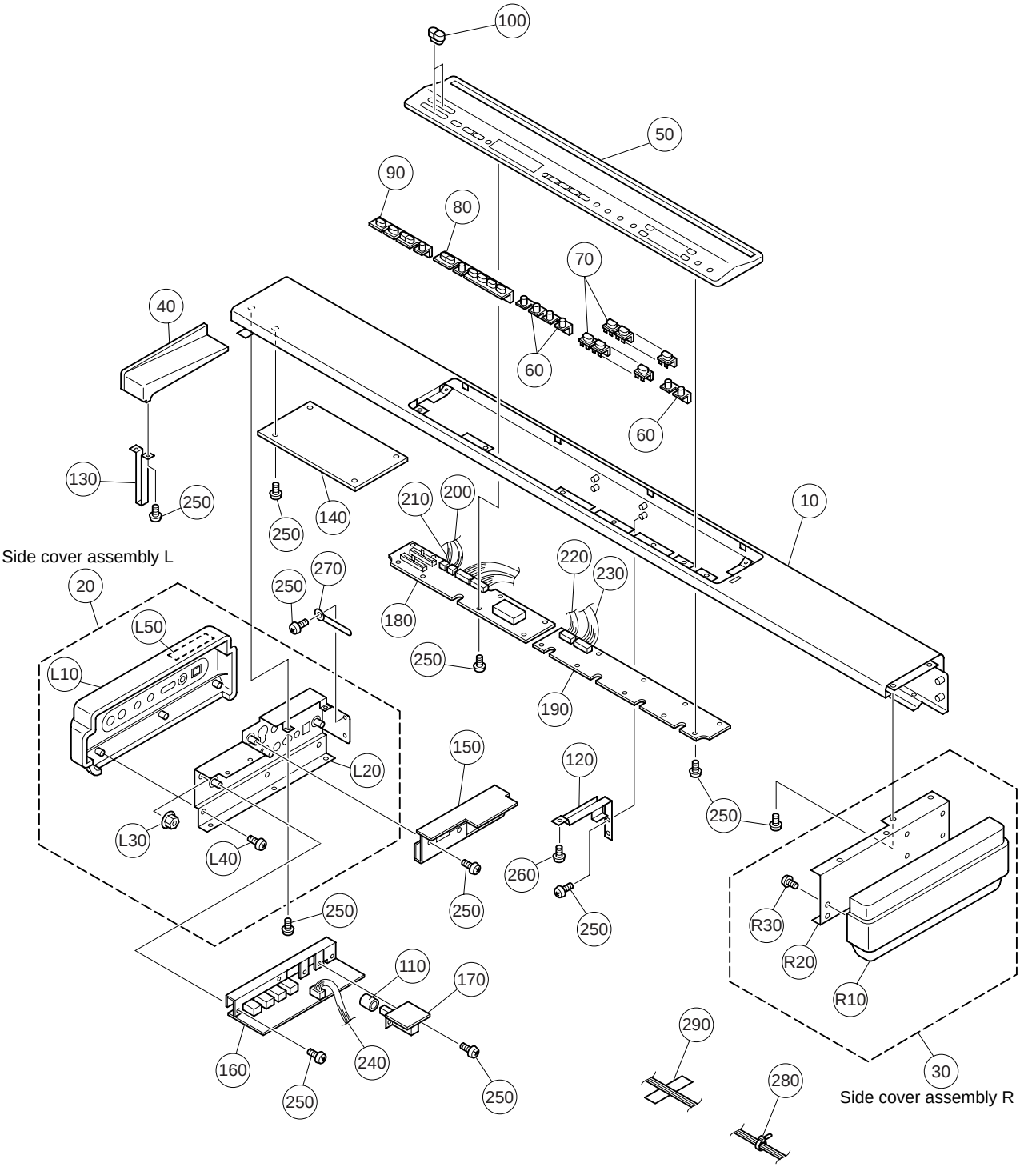

	REF NO.	PART NO.	DESCRIPTION			REMARKS	QTY	RANK
		- -	UPPER CASE ASSEMBLY			P-80 (V440770)		
*	10	**V4549500**	Top Board Assembly					
	20	- -	Side Cover Assembly	LEFT		(V440620)		
	30	- -	Side Cover Assembly	RIGHT		(V440630)		
*	40	**V4408300**	End Block	LEFT				
*	50	**V4409900**	Panel					
*	60	**V4409200**	Knob	A		REVERB,EFFECT,TOUCH, TRANSPOSE,VARIATION,SPLIT	3	
*	70	**V4409300**	Knob	B		VOICE(GRAND PIANO-BASS)	2	
*	80	**V4619700**	Knob	C		TEMPO/OTHER VALUE,SONG		
*	90	**V4619800**	Knob	D		DEMO,METRONOME		
	100	**VS179900**	Slide Knob			MASTER VOLUME,BRILLIANCE	2	03
	110	**VQ218800**	Push Knob			STANDBY/ON		03
	120	- -	Angle Bracket, Panel			(V446060)	2	
	130	- -	Holder			(V440890)		
*	140	**V4459500**	Circuit Board	DM				
*	150	**V4462400**	Circuit Board	JACK				
*	160	**V4459700**	Circuit Board	M				
*	170	**V4375300**	Circuit Board	SW				
*	180	**V4279500**	Circuit Board	PNL				
*	190	**V4279600**	Circuit Board	PNR				
	200	- -	Connector Assembly	VR1		(V444240)		
	210	- -	Connector Assembly	VR2		(V444250)		
	220	- -	Connector Assembly	PN1		(V444260)		
	230	- -	Connector Assembly	PN2		(V444270)		
	240	- -	Connector Assembly	+B		(V444280)		
	250	**EP600130**	Bind Head Tapping Screw-B	3.0X6 MFZN2Y			52	01
	260	**EP600190**	Bind Head Tapping Screw-B	3.0X8 MFZN2BL			2	01
	270	**CB817510**	Cord Binder	S-14B				03
	280	**CB069250**	Cord Holder	BK-1			4	01
	290	**V2555100**	Adhesive Tape	12X70			8	02
		- -	Side Cover Assembly	LEFT		(V440620)		
*	L10	**V4655900**	Side Cover	LEFT				
*	L20	**V4406800**	Angle, Arm Assembly	LEFT				
	L30	**VN065400**	Self Threading Nut	SD188008			3	01
	L40	**EP600250**	Bind Head Tapping Screw-B	3.0X8 MFZN2Y			3	01
	L50	**V2432000**	Dust Proof Cloth	100X10X0.55				03
		- -	Side Cover Assembly	RIGHT		(V440630)		
*	R10	**V4405000**	Side Cover	RIGHT				
*	R20	**V4407100**	Angle, Arm Assembly	RIGHT				
	R30	**EP600250**	Bind Head Tapping Screw-B	3.0X8 MFZN2Y			10	01

*: New Parts

RANK: Japan only

KEYBOARD ASSEMBLY

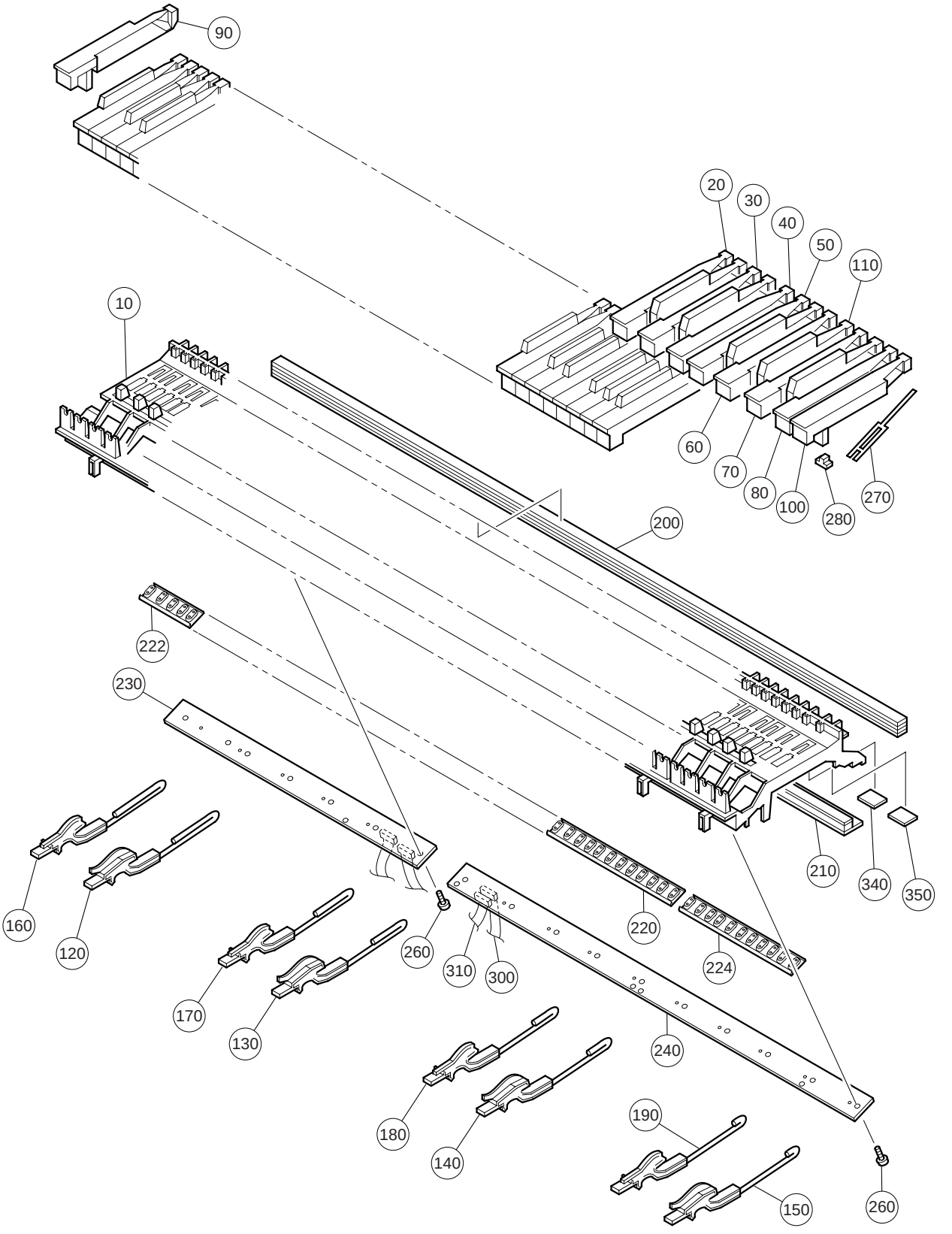

REF NO.	PART NO.	DESCRIPTION			REMARKS	QTY	RANK
	VZ705400	KEYBOARD ASSEMBLY	GHD A88 K6		P-80		63
10	**- -**	MK Frame	MK		(VU42210)		
20	**VU101000**	White Key	C WH			7	05
30	**VU101100**	White Key	D WH			7	05
40	**VU101200**	White Key	E WH			7	05
50	**VU101300**	White Key	F WH			7	05
60	**VU101400**	White Key	G WH			7	05
70	**VU101500**	White Key	A WH			7	05
80	**VU101600**	White Key	B WH			8	05
90	**VU101700**	White Key	A' WH				05
100	**VU101800**	White Key	C' WH				05
110	**VU102100**	Black Key	BL			36	05
120	**VY828500**	Hammer Assembly, White Key	1			13	05
130	**VY828600**	Hammer Assembly, White Key	2			13	05
140	**VY828700**	Hammer Assembly, White Key	3			13	05
150	**VY828800**	Hammer Assembly, White Key	4			13	05
160	**VY828900**	Hammer Assembly, Black Key	1			9	05
170	**VY829000**	Hammer Assembly, Black Key	2			9	05
180	**VY829100**	Hammer Assembly, Black Key	3			9	05
190	**VY829200**	Hammer Assembly, Black Key	4			9	05
200	**VU342100**	Stopper Felt	U88				09
210	**VU342200**	Stopper Felt	L88				09
220	**VY846700**	Rubber Contact	OCTAVE 12KEY D-C#			6	08
222	**VY846800**	Rubber Contact	OCTAVE 5KEY A-C #				08
224	**VY846900**	Rubber Contact	OCTAVE 11KEY D-C				08
230	**VZ705200**	Circuit Board	GH-D SW (L)				12
240	**VZ705300**	Circuit Board	GH-D SW (H)				13
260	**VT413400**	Bind Head Tapping Screw-P	3.0X10 MFZN2			17	01
270	**VZ417900**	Spring	R WH BL		}	88	03
270	**V2798500**	Spring	R WH BL		}	88	
280	**VU237500**	Rubber				88	03
300	**VU341800**	Connector Assembly	9P BLOCK				06
310	**VU341900**	Connector Assembly	12P NOTE				07
340	**VV467900**	Stopper Support	A 35.5 20+				03
350	**VV468100**	Stopper Support	B 24 20-			18	03
		JIGS					
	TX000670	Rod					

*: New Parts

RANK: Japan only

SUSTAIN PEDAL

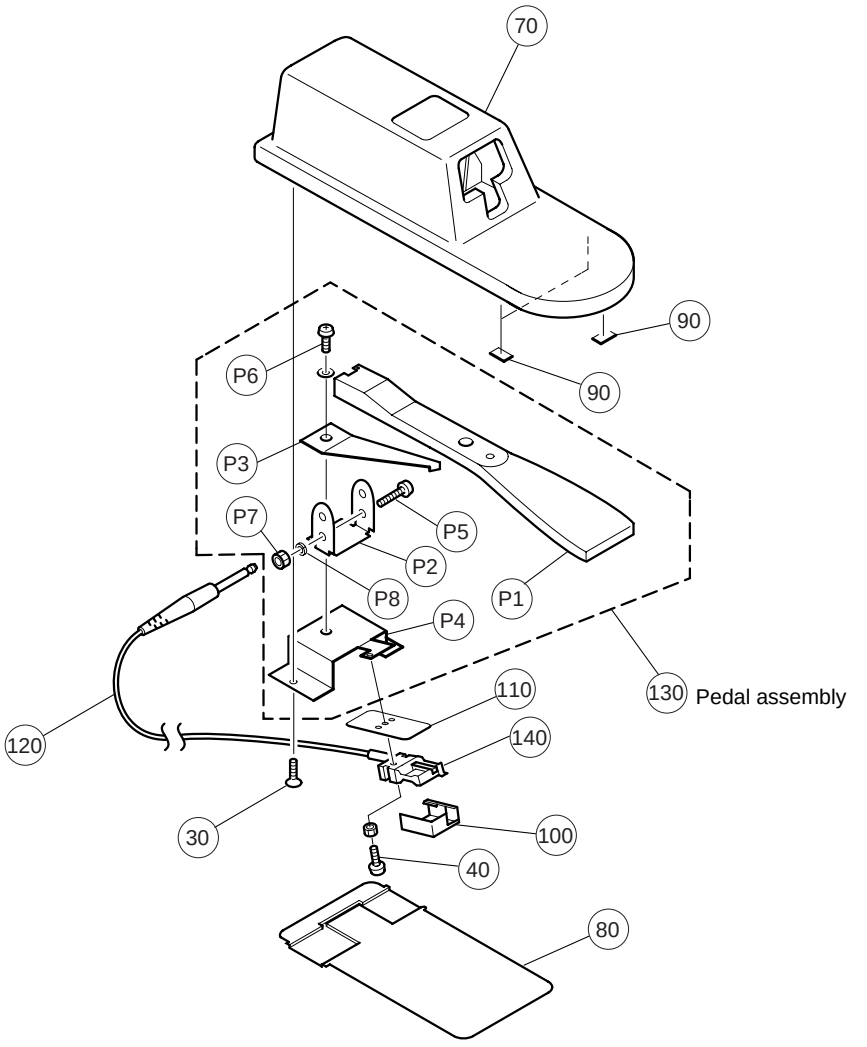

REF NO.	PART NO.	DESCRIPTION			REMARKS	QTY	RANK
	- -	SUSTAIN PEDAL	FC4		P-80 (VT37300)		
10	- -	Tube	M4.1 AWG#6		(CH00217)		
20	- -	Tube	M5.2 AWG#4		(CH00219)		
30	**EC030070**	Flat Head Screw	3.0X8 MFZN2Y				01
40	**EE630060**	Pan Head Screw	3.0X12 MFZN2Y				01
70	**CB806740**	Pedal Box					07
80	**CB806750**	Bottom Board					04
90	**CB808790**	Stopper					01
100	**CB808360**	Switch Cover					01
110	**CA800450**	Fiber Washer					01
120	**MI801570**	Cord Assembly	1.9m 6.3		with plug		05
130	**NB805010**	Pedal Assembly					10
140	**NB037140**	Switch Assembly					05
	NB805010	Pedal Assembly					10
P1	**AA803240**	Pedal					05
P2	**AA803250**	Holder, Pedal					02
P3	**AA803260**	Spring					04
P4	**AA803270**	Frame					05
P5	**VE439100**	Hexagonal Bolt	5.0X40 MFZN2Y				01
* P6	**03751460**	Pan Head Screw	5.0X20 MFZN2Y				
* P7	**03760300**	Hexagonal Nut	#1 JIS 5.0 MFZN2Y				
* P8	**03766870**	Spring Washer	#2 5.0 MFZN2B			2	

*: New Parts

RANK: Japan only

ELECTRICAL PARTS

	REF NO.	PART NO.	DESCRIPTION			REMARKS	QTY	RANK
			ELECTRICAL PARTS			P-80		
*		**V4459500**	Circuit Board	DM		(XW197B0)		
		VZ705200	Circuit Board	GH-D SW (L)		(XT240A0)		12
		VZ705300	Circuit Board	GH-D SW (H)		(XT241A0)		13
*		**V4462400**	Circuit Board	JACK		(XW563B0)		
*		**V4459700**	Circuit Board	M		(XW199B0)		
*		**V4279500**	Circuit Board	PNL		(XW198B0)		
*		**V4279600**	Circuit Board	PNR		(XW198B0)		
*		**V4375300**	Circuit Board	SW		(XW198B0)		
*		**V4459500**	Circuit Board	DM		(XW197B0)		
	C1	**US062100**	Ceramic Capacitor-SL(chip)	100P 50V J				01
	-12	**US062100**	Ceramic Capacitor-SL(chip)	100P 50V J				01
	C13	**US064100**	Ceramic Capacitor-B (chip)	0.01 50V K				01
	C14	**US062100**	Ceramic Capacitor-SL(chip)	100P 50V J				01
	-21	**US062100**	Ceramic Capacitor-SL(chip)	100P 50V J				01
	C22	**US064100**	Ceramic Capacitor-B (chip)	0.01 50V K				01
	-27	**US064100**	Ceramic Capacitor-B (chip)	0.01 50V K				01
	C28	**VI055000**	Super Cap.	0.100F 5.5V FYD0H				04
	C29	**US064100**	Ceramic Capacitor-B (chip)	0.01 50V K				01
	C30	**UF037100**	Electrolytic Cap. (chip)	10 16V				01
	C31	**US064100**	Ceramic Capacitor-B (chip)	0.01 50V K				01
	C32	**US064100**	Ceramic Capacitor-B (chip)	0.01 50V K				01
	C33	**UF037100**	Electrolytic Cap. (chip)	10 16V				01
	C34	**US064100**	Ceramic Capacitor-B (chip)	0.01 50V K				01
	C35	**UF037100**	Electrolytic Cap. (chip)	10 16V				01
	C36	**US064100**	Ceramic Capacitor-B (chip)	0.01 50V K				01
	C37	**UF037100**	Electrolytic Cap. (chip)	10 16V				01
	C38	**US064100**	Ceramic Capacitor-B (chip)	0.01 50V K				01
	C39	**US064100**	Ceramic Capacitor-B (chip)	0.01 50V K				01
	C40	**UF037100**	Electrolytic Cap. (chip)	10 16V				01
	C41	**US064100**	Ceramic Capacitor-B (chip)	0.01 50V K				01
	-44	**US064100**	Ceramic Capacitor-B (chip)	0.01 50V K				01
	C45	**UF037220**	Electrolytic Cap. (chip)	22 16V				01
	C46	**UF037100**	Electrolytic Cap. (chip)	10 16V				01
	C47	**US064100**	Ceramic Capacitor-B (chip)	0.01 50V K				01
	C48	**US061270**	Ceramic Capacitor-CH(chip)	27P 50V J				01
	C49	**US135100**	Ceramic Capacitor-F (chip)	0.1 16V Z				01
	C50	**US063100**	Ceramic Capacitor-B (chip)	1000P 50V K				01
	C51	**US135100**	Ceramic Capacitor-F (chip)	0.1 16V Z				01
	C52	**US064100**	Ceramic Capacitor-B (chip)	0.01 50V K				01
	C53	**US135100**	Ceramic Capacitor-F (chip)	0.1 16V Z				01
	C54	**US061220**	Ceramic Capacitor-CH(chip)	22P 50V J				01
	C55	**US064100**	Ceramic Capacitor-B (chip)	0.01 50V K				01
	C56	**US061220**	Ceramic Capacitor-CH(chip)	22P 50V J				01
	C57	**US064100**	Ceramic Capacitor-B (chip)	0.01 50V K				01
	C58	**UF037220**	Electrolytic Cap. (chip)	22 16V				01
	C59	**UF037220**	Electrolytic Cap. (chip)	22 16V				01
	C60	**US062220**	Ceramic Capacitor-SL(chip)	220P 50V J				
	C61	**US135100**	Ceramic Capacitor-F (chip)	0.1 16V Z				01
	C62	**US064100**	Ceramic Capacitor-B (chip)	0.01 50V K				01
	C63	**UF037220**	Electrolytic Cap. (chip)	22 16V				01
	C64	**UF038100**	Electrolytic Cap. (chip)	100 16V				01
	C65	**UF037220**	Electrolytic Cap. (chip)	22 16V				01
	C66	**UF037220**	Electrolytic Cap. (chip)	22 16V				01
	C67	**US064100**	Ceramic Capacitor-B (chip)	0.01 50V K				01
	C68	**US062100**	Ceramic Capacitor-SL(chip)	100P 50V J				01
	-71	**US062100**	Ceramic Capacitor-SL(chip)	100P 50V J				01
	C72	**US063270**	Ceramic Capacitor-B (chip)	2700P 50V K				01
	C73	**US063270**	Ceramic Capacitor-B (chip)	2700P 50V K				01
	C74	**US063120**	Ceramic Capacitor-B (chip)	1200P 50V K				01
	C75	**US063120**	Ceramic Capacitor-B (chip)	1200P 50V K				01
	C76	**US062330**	Ceramic Capacitor-SL(chip)	330P 50V J				01
	C77	**US062330**	Ceramic Capacitor-SL(chip)	330P 50V J				01
	C78	**UF017220**	Electrolytic Cap. (chip)	22 6.3V				01
	C79	**US064100**	Ceramic Capacitor-B (chip)	0.01 50V K				01
	C80	**US064100**	Ceramic Capacitor-B (chip)	0.01 50V K				01
	C81	**UF037100**	Electrolytic Cap. (chip)	10 16V				01
	C82	**UF037100**	Electrolytic Cap. (chip)	10 16V				01
	C83	**US064100**	Ceramic Capacitor-B (chip)	0.01 50V K				01

*: New Parts

RANK: Japan only

REF NO.	PART NO.	DESCRIPTION			REMARKS	QTY	RANK
C84	**UR828470**	Electrolytic Cap.	470.00 10.0V				01
C85	**UF038100**	Electrolytic Cap. (chip)	100 16V				01
C86	**UF037220**	Electrolytic Cap. (chip)	22 16V				01
C87	**UF037220**	Electrolytic Cap. (chip)	22 16V				01
C88	**US064100**	Ceramic Capacitor-B (chip)	0.01 50V K				01
C89	**US064100**	Ceramic Capacitor-B (chip)	0.01 50V K				01
C90	**UR848220**	Electrolytic Cap.	220.00 25.0V				01
C91	**US061680**	Ceramic Capacitor-SL(chip)	68P 50V J				01
C92	**US061680**	Ceramic Capacitor-SL(chip)	68P 50V J				01
C93	**US064100**	Ceramic Capacitor-B (chip)	0.01 50V K				01
-102	**US064100**	Ceramic Capacitor-B (chip)	0.01 50V K				01
C103	**UF047100**	Electrolytic Cap. (chip)	10 25V				01
C104	**UF047100**	Electrolytic Cap. (chip)	10 25V				01
C107	**US063100**	Ceramic Capacitor-B (chip)	1000P 50V K				01
-109	**US063100**	Ceramic Capacitor-B (chip)	1000P 50V K				01
CN1	**VB390800**	Connector Base Post	PH-12P TE				01
CN2	**VB390500**	Connector Base Post	PH- 9P TE				03
CN3	**VB390400**	Connector Base Post	PH- 8P TE				01
CN4	**VB390000**	Connector Base Post	PH- 4P TE				01
CN5	**VB390200**	Connector Base Post	PH- 6P TE				01
CN6	**VK025300**	Wire Trap	52147 9P TE				01
D1	**VB493900**	Diode	MA221		}		01
D1	**VV925900**	Diode	RLS-73 TE-11		}		01
D2	**VB493900**	Diode	MA221		}		01
D2	**VV925900**	Diode	RLS-73 TE-11		}		01
* IC1	**XW661100**	IC	M27C800-100F1		MASK ROM 8M PROGRAM		
IC1	**VK863100**	IC Socket	DICF-42CS-E				03
IC2	**XD655A00**	IC	TC74HC00AF		NAND		01
IC3	**XU462A00**	IC	MSM514260C-60TS-K		DRAM 4M DSP		08
IC4	**XN153A00**	IC	TD62083F-TP1		TRANSISTOR ARRAY		04
IC5	**XU719A00**	IC	HM621664HBLJP-20		SRAM 1M		11
IC6	**XM970A00**	IC	TC74HC138AF		DECODER		02
IC7	**XU947C00**	IC	HG73C205AFD		SWX00B		09
IC8	**XU947C00**	IC	HG73C205AFD		SWX00B		09
IC9	**XU541100**	IC	MX23C3210		MASKROM 32M WAVE1		08
IC10	**XV297A00**	IC	PCM69-3AU/TE2		DAC		05
IC11	**XU542100**	IC	MX23C3210		MASKROM 32M WVE2		08
IC12	**XR063A00**	IC	M51951AML		REGULATOR +5V		02
IC13	**XF291A00**	IC	UPC4570G2		OP AMP		03
IC14	**XU543100**	IC	MX23C3210		MASKROM 32M WAVE3		08
IC15	**XS516A00**	IC	UPC2933T-E1		REGULATOR +3.3V		03
IC18	**XT441A00**	IC	UPC2909T-E1		REGULATOR +9V		03
IC21	**XR925A00**	IC	SI-8401L		REGULATOR +5V 0.5A		05
IC22	**XF291A00**	IC	UPC4570G2		OP AMP		03
IC23	**XJ598A00**	IC	NJM78L05UA		REGULATOR +5V		02
R1	**RD357470**	Carbon Resistor (chip)	47K 63M J				01
R2	**RD354470**	Carbon Resistor (chip)	47 63M J				01
R3	**RD354470**	Carbon Resistor (chip)	47 63M J				01
R4	**RD355100**	Carbon Resistor (chip)	100 63M J				01
-9	**RD355100**	Carbon Resistor (chip)	100 63M J				01
R10	**RD354470**	Carbon Resistor (chip)	47 63M J				01
R11	**RD355100**	Carbon Resistor (chip)	100 63M J				01
R12	**RD354470**	Carbon Resistor (chip)	47 63M J				01
R13	**RD356100**	Carbon Resistor (chip)	1.0K 63M J				01
R14	**RD354470**	Carbon Resistor (chip)	47 63M J				01
-17	**RD354470**	Carbon Resistor (chip)	47 63M J				01
R18	**RD357470**	Carbon Resistor (chip)	47K 63M J				01
R19	**RD354470**	Carbon Resistor (chip)	47 63M J				01
-31	**RD354470**	Carbon Resistor (chip)	47 63M J				01
R32	**RD357470**	Carbon Resistor (chip)	47K 63M J				01
R33	**RD354470**	Carbon Resistor (chip)	47 63M J				01
R34	**RD354470**	Carbon Resistor (chip)	47 63M J				01
R35	**RD357470**	Carbon Resistor (chip)	47K 63M J				01
R36	**RD354470**	Carbon Resistor (chip)	47 63M J				01
-42	**RD354470**	Carbon Resistor (chip)	47 63M J				01
R43	**RD357470**	Carbon Resistor (chip)	47K 63M J				01
R44	**RD357470**	Carbon Resistor (chip)	47K 63M J				01
R45	**RD355100**	Carbon Resistor (chip)	100 63M J				01
R46	**RD354470**	Carbon Resistor (chip)	47 63M J				01
R47	**RD355100**	Carbon Resistor (chip)	100 63M J				01

*: New Parts

RANK: Japan only

	REF NO.	PART NO.	DESCRIPTION			REMARKS	QTY	RANK
	R48	**RD355100**	Carbon Resistor (chip)	100 63M J				01
	R49	**RD354470**	Carbon Resistor (chip)	47 63M J				01
	R50	**RD355100**	Carbon Resistor (chip)	100 63M J				01
	R51	**RD354470**	Carbon Resistor (chip)	47 63M J				01
	-53	**RD354470**	Carbon Resistor (chip)	47 63M J				01
	R54	**RD357100**	Carbon Resistor (chip)	10K 63M J				01
	R55	**RD357100**	Carbon Resistor (chip)	10K 63M J				01
	R56	**RD357470**	Carbon Resistor (chip)	47K 63M J				01
	R57	**RD357100**	Carbon Resistor (chip)	10K 63M J				01
	-59	**RD357100**	Carbon Resistor (chip)	10K 63M J				01
	R60	**RD354470**	Carbon Resistor (chip)	47 63M J				01
	-64	**RD354470**	Carbon Resistor (chip)	47 63M J				01
	R65	**RD357470**	Carbon Resistor (chip)	47K 63M J				01
	R66	**RD357470**	Carbon Resistor (chip)	47K 63M J				01
	R67	**RD357100**	Carbon Resistor (chip)	10K 63M J				01
	R68	**RD356150**	Carbon Resistor (chip)	1.5K 63M J				01
	R69	**RD355100**	Carbon Resistor (chip)	100 63M J				01
	R70	**RD357100**	Carbon Resistor (chip)	10K 63M J				01
	R71	**RD356100**	Carbon Resistor (chip)	1.0K 63M J				01
	-73	**RD356100**	Carbon Resistor (chip)	1.0K 63M J				01
	R74	**RD354470**	Carbon Resistor (chip)	47 63M J				01
	-77	**RD354470**	Carbon Resistor (chip)	47 63M J				01
	R78	**RD358470**	Carbon Resistor (chip)	470K 63M J				01
	R79	**RD357220**	Carbon Resistor (chip)	22K 63M J				01
	R80	**RD357100**	Carbon Resistor (chip)	10K 63M J				01
	R81	**RD354100**	Carbon Resistor (chip)	10 63M J				01
	R82	**RD356220**	Carbon Resistor (chip)	2.2K 63M J				01
	R83	**RD355100**	Carbon Resistor (chip)	100 63M J				01
	-86	**RD355100**	Carbon Resistor (chip)	100 63M J				01
	R87	**RD356220**	Carbon Resistor (chip)	2.2K 63M J				01
	-91	**RD356220**	Carbon Resistor (chip)	2.2K 63M J				01
	R92	**RD357100**	Carbon Resistor (chip)	10K 63M J				01
	-95	**RD357100**	Carbon Resistor (chip)	10K 63M J				01
	R96	**RD356470**	Carbon Resistor (chip)	4.7K 63M J				01
	R97	**RD356470**	Carbon Resistor (chip)	4.7K 63M J				01
*	R98	**RD354330**	Carbon Resistor (chip)	33 63M J				
*	-101	**RD354330**	Carbon Resistor (chip)	33 63M J				
	R102	**RD355100**	Carbon Resistor (chip)	100 63M J				01
	R103	**RD355100**	Carbon Resistor (chip)	100 63M J				01
	R124	**RD356100**	Carbon Resistor (chip)	1.0K 63M J				01
	R125	**RD354820**	Carbon Resistor (chip)	82 63M J				01
	R126	**RD354820**	Carbon Resistor (chip)	82 63M J				01
	R127	**RD357100**	Carbon Resistor (chip)	10K 63M J				01
	TA1	**VT943400**	Transistor Array	TD62785F(TP1)				04
	X1	**VZ703600**	Quartz Crystal Unit	8.4672MHz SMD-49				03
	ZD1	**VU172000**	Zener Diode	UDZS5.6BTE-17 5.6V				01
		VZ705200	Circuit Board	GH-D SW (L)		(XT240A0)		12
		- -	Dust Proof Cloth			(VU45960)		
	C1	**FG644100**	Ceramic Capacitor-F	0.01 50V Z				01
	-3	**FG644100**	Ceramic Capacitor-F	0.01 50V Z				01
	C5	**VF760000**	Electrolytic Cap.	100.00 10.0V				01
	CL1	**VI653000**	Ceramic Resonator	CST4.00MGW040				01
	CN1	**VB390400**	Connector Base Post	PH- 8P TE				01
	CN2	**VB390500**	Connector Base Post	PH- 9P TE				03
	CN3	**VB390800**	Connector Base Post	PH-12P TE				01
	D5	**VB941200**	Diode	1SS133, 1SS176				
	-72	**VB941200**	Diode	1SS133, 1SS176				
	J1	**VD041700**	Jumper Wire	0.55				
	J2	**VD041700**	Jumper Wire	0.55				
	KSN2	**XR632A00**	IC	YMZ702-D		KEY SCAN		09
	R1	**HF759100**	Carbon Resistor	1.0M 1/4 J				01
	R2	**HF755100**	Carbon Resistor	100.0 1/4 J				01
	R3	**HF755100**	Carbon Resistor	100.0 1/4 J				01
	R4	**HF756100**	Carbon Resistor	1.0K 1/4 J				01
	RA1	**VU483500**	Resistor Array	RGLD12X103J				01
		VZ705300	Circuit Board	GH-D SW (H)		(XT241A0)		13
		- -	Dust Proof Cloth			(VU45980)		
	D1	**VB941200**	Diode	1SS133,1SS176				01

*: New Parts

RANK: Japan only

	REF NO.	PART NO.	DESCRIPTION			REMARKS	QTY	RANK
	-108	**VB941200**	Diode	1SS133,1SS176				01
	CN1	**VB390500**	Connector Base Post	PH- 9P TE				03
	CN2	**VB390800**	Connector Base Post	PH-12P TE				01
*		**V4462400**	Circuit Board	JACK		(XW563B0)		
		VB659000	Bind Head Screw	3.0X8 MFZN2BL				01
		EP600140	Bind Head Tapping Screw-B	3.0X10 MFZN2BL				01
		- -	Angle Bracket, Jack	D		(V442050)		
*		**V4443000**	Ribbon Cable	9P				
	C1	**UF037100**	Electrolytic Cap. (chip)	10 16V				01
	C3	**US064100**	Ceramic Capacitor-B (chip)	0.01 50V K				01
*	C4	**UE117470**	Electrolytic Cap.-BP (chip)	47 6.3V RV2BP		}		
	C4	**UF217470**	Electrolytic Cap.-BP (chip)	47 6.3V UWP0J4				
	C5	**US135100**	Ceramic Capacitor-F (chip)	0.1 16V Z				01
	C6	**US064100**	Ceramic Capacitor-B (chip)	0.01 50V K				01
	C7	**US064100**	Ceramic Capacitor-B (chip)	0.01 50V K				01
	C8	**UF037100**	Electrolytic Cap. (chip)	10 16V				01
	C9	**US064100**	Ceramic Capacitor-B (chip)	0.01 50V K				01
	C10	**US062100**	Ceramic Capacitor-SL(chip)	100P 50V J				01
	C11	**US064100**	Ceramic Capacitor-B (chip)	0.01 50V K				01
	C13	**US064100**	Ceramic Capacitor-B (chip)	0.01 50V K				01
	CN1	**VI878700**	Cable Holder	51048 9P TE				01
	D1	**VB493900**	Diode	MA221		}		01
	-4	**VB493900**	Diode	MA221				01
	D1	**VV925900**	Diode	RLS-73 TE-11				01
	-4	**VV925900**	Diode	RLS-73 TE-11		}		01
	IC1	**XI348A00**	IC	SC7SU04FEL		INVERTER		01
	IC2	**XU073A00**	IC	SN75C1168NSR		LINE DRIVER/RECEIVER		05
	IC3	**VN406200**	Photo Coupler	HCPL-0600-500		}		05
	IC3	**VN686000**	Photo Coupler	PC410T				04
	JK1	**VT202500**	DIN Connector	5P YKF51-50		MIDI IN		01
	JK2	**VT202500**	DIN Connector	5P YKF51-50		MIDI OUT		01
	JK3	**VV269500**	DIN Connector	DIN 8P MD-S813		TO HOST		03
	JK4	**VS056400**	Phone Jack	HLJ7101-01		SUSTAIN		01
	L1	**VR243700**	Chip Inductance	56U LEM2520 T 560J				01
	-4	**VR243700**	Chip Inductance	56U LEM2520 T 560J				01
	L5	**VQ724900**	Chip Inductance	BK2125HM601-T				01
	-11	**VQ724900**	Chip Inductance	BK2125HM601-T				01
	L12	**VR243700**	Chip Inductance	56U LEM2520 T 560J				01
	L13	**VR243700**	Chip Inductance	56U LEM2520 T 560J				01
	R1	**RD355100**	Carbon Resistor (chip)	100 63M J				01
	-3	**RD355100**	Carbon Resistor (chip)	100 63M J				01
	R4	**RD357100**	Carbon Resistor (chip)	10K 63M J				01
	-7	**RD357100**	Carbon Resistor (chip)	10K 63M J				01
	R8	**RD355100**	Carbon Resistor (chip)	100 63M J				01
	R9	**RD355100**	Carbon Resistor (chip)	100 63M J				01
	R10	**RD357100**	Carbon Resistor (chip)	10K 63M J				01
	R11	**RD355100**	Carbon Resistor (chip)	100 63M J				01
	R12	**RD355100**	Carbon Resistor (chip)	100 63M J				01
	R13	**RD356100**	Carbon Resistor (chip)	1.0K 63M J				01
	R14	**RD357100**	Carbon Resistor (chip)	10K 63M J				01
	R15	**RD356100**	Carbon Resistor (chip)	1.0K 63M J				01
	R16	**RD355220**	Carbon Resistor (chip)	220 63M J				01
	R17	**RD355220**	Carbon Resistor (chip)	220 63M J				01
	R18	**RD357100**	Carbon Resistor (chip)	10K 63M J				01
	R19	**RD357220**	Carbon Resistor (chip)	22K 63M J				01
	R20	**RD357100**	Carbon Resistor (chip)	10K 63M J				01
	R21	**RD357220**	Carbon Resistor (chip)	22K 63M J				01
	R22	**RD356150**	Carbon Resistor (chip)	1.5K 63M J				01
	R23	**RD357100**	Carbon Resistor (chip)	10K 63M J				01
	R24	**RD355220**	Carbon Resistor (chip)	220 63M J				01
	-26	**RD355220**	Carbon Resistor (chip)	220 63M J				01
	R27	**RD357100**	Carbon Resistor (chip)	10K 63M J				01
	R28	**RD355470**	Carbon Resistor (chip)	470 63M J				01
	SW1	**VQ665200**	Slide Switch	SSSF144-S06N-0		HOST SELECT		03
	TR1	**VV556400**	Transistor	2SC2412K Q,R,S				01
	TR2	**VV556400**	Transistor	2SC2412K Q,R,S				01
*		**V4459700**	Circuit Board			(XW199B0)		
		EP600140	Bind Head Tapping Screw-B	3.0X10 MFZN2BL				01

*: New Parts

RANK: Japan only

	REF NO.	PART NO.	DESCRIPTION			REMARKS	QTY	RANK
		- -	Angle Bracket, Jack	A		(V442040)		
		- -	Jack Cover			(V468690)		
		VD041700	Jumper Wire	0.55				
	C1	FG644100	Ceramic Capacitor-F	0.01 50V Z				01
	C2	FG644100	Ceramic Capacitor-F	0.01 50V Z				01
	C3	FG652100	Ceramic Capacitor-SL	100P 50V J				01
	C4	UR838100	Electrolytic Cap.	100.00 16.0V				01
	C5	FG652100	Ceramic Capacitor-SL	100P 50V J				01
	C6	UR838100	Electrolytic Cap.	100.00 16.0V				01
	C7	UR849220	Electrolytic Cap.	2200 25.0V				
	C8	UR838220	Electrolytic Cap.	220.00 16.0V				01
	C9	UR838220	Electrolytic Cap.	220.00 16.0V				01
	C10	VD930900	Semiconductive Cera. Cap.	0.1 25V M				01
	-12	VD930900	Semiconductive Cera. Cap.	0.1 25V M				01
	C14	UR838470	Electrolytic Cap.	470.00 16.0V				01
	C15	VD930900	Semiconductive Cera. Cap.	0.1 25V M				01
	CN1	VB390100	Connector Base Post	PH- 5P TE				01
	CN2	VK024800	Wire Trap	52147 4P TE				01
	CN3	VB390200	Connector Base Post	PH- 6P TE				01
	D1	VL723600	Diode	20E1-FC4				01
	D2	VD631600	Diode	1SS133,176,HSS104				01
	IC1	XP705A00	IC	NJM2073D		POWER AMP. 0.65W 2CH		03
	IC2	XM968B00	IC	UPC24M09AHF		} REGULATOR +9V		03
*	IC2	XU583A00	IC	BA09T		}		
	JK1	VC664500	Connector	HEC2305		DC IN 12V		01
	JK2	VS056300	Phone Jack	HLJ7001-01-		PHONES		01
	JK3	VS056300	Phone Jack	HLJ7001-01-		PHONES		01
	JK4	VS056400	Phone Jack	HLJ7101-01-		OUTPUT R		01
	JK5	VS056400	Phone Jack	HLJ7101-01-		OUTPUT L/L+R		01
	JK6	VP599300	Pin Jack	YKC21-3120 2P		OUTPUT L,R		02
	L1	VQ884000	Line Filter	CM08RB01				03
	L2	VT733400	Coil	SBT-0210T 10uH				02
	-6	VT733400	Coil	SBT-0210T 10uH				02
	R1	HF757100	Carbon Resistor	10.0K 1/4 J				01
	R2	HF757100	Carbon Resistor	10.0K 1/4 J				01
	R3	HF756390	Carbon Resistor	3.9K 1/4 J				01
	R4	HF756390	Carbon Resistor	3.9K 1/4 J				01
	R5	HF755220	Carbon Resistor	220.0 1/4 J				01
	R6	HF755220	Carbon Resistor	220.0 1/4 J				01
	R7	HF757100	Carbon Resistor	10.0K 1/4 J				01
	R8	HF757100	Carbon Resistor	10.0K 1/4 J				01
	R9	HF756470	Carbon Resistor	4.7K 1/4 J				01
	R10	HF754330	Carbon Resistor	33.0 1/4 J				01
	R11	HF754330	Carbon Resistor	33.0 1/4 J				01
	R12	HF757470	Carbon Resistor	47.0K 1/4 J				01
	R13	HF755470	Carbon Resistor	470.0 1/4 J				01
	R14	HF755470	Carbon Resistor	470.0 1/4 J				01
	R15	HF755150	Carbon Resistor	150.0 1/4 J				01
	R18	HF758100	Carbon Resistor	100.0K 1/4 J				01
	R19	HF757100	Carbon Resistor	10.0K 1/4 J				01
	R20	HF755560	Carbon Resistor	560.0 1/4 J				01
	-23	HF755560	Carbon Resistor	560.0 1/4 J				01
	R24	HF757100	Carbon Resistor	10.0K 1/4 J				01
	-27	HF757100	Carbon Resistor	10.0K 1/4 J				01
	RY1	VU685600	Relay	DC NA- 5 W-K				06
	TH1	VU847300	Protector Switch	RUE185 1.85A 30V				03
	TR1	IC174070	Transistor	2SC1740S R,S				01
	TR2	IC174070	Transistor	2SC1740S R,S				01
*		V4279500	Circuit Board	PNL		(XW198B0)		
*		V4279600	Circuit Board	PNR		(XW198B0)		
*		V4375300	Circuit Board	SW		(XW198B0)		
		VD041700	Jumper Wire	0.55				
*		V4442900	Ribbon Wire	4P				
	C1	UA354220	Mylar Capacitor	0.022 50V J				
	-4	UA354220	Mylar Capacitor	0.022 50V J				
	CN1	VB858300	Connector Base Post	PH- 4P SE				01
	CN2	VB858400	Connector Base Post	PH- 5P SE				01
	CN3	VI878200	Cable Holder	51048 4P TE				01
	CN201	VB858800	Connector Base Post	PH- 9P SE				01

*: New Parts

RANK: Japan only

REF NO.	PART NO.	DESCRIPTION			REMARKS	QTY	RANK
CN202	**VC166500**	Connector Base Post	PH-12P SE				01
CN301	**VB858800**	Connector Base Post	PH- 9P SE				01
CN302	**VC166500**	Connector Base Post	PH-12P SE				01
D102	**VD631600**	Diode	1SS133,176,HSS104				01
-106	**VD631600**	Diode	1SS133,176,HSS104				01
D202	**VD631600**	Diode	1SS133,176,HSS104				01
-206	**VD631600**	Diode	1SS133,176,HSS104				01
D302	**VD631600**	Diode	1SS133,176,HSS104				01
-306	**VD631600**	Diode	1SS133,176,HSS104				01
D402	**VD631600**	Diode	1SS133,176,HSS104				01
-406	**VD631600**	Diode	1SS133,176,HSS104				01
D502	**VD631600**	Diode	1SS133,176,HSS104				01
-506	**VD631600**	Diode	1SS133,176,HSS104				01
D602	**VD631600**	Diode	1SS133,176,HSS104				01
-606	**VD631600**	Diode	1SS133,176,HSS104				01
EP	**- -**	GND wire			(V480840)		
LD5	**VQ323900**	LED Display	SL-9351S				05
LD101	**VI813100**	LED	SLZ-181B-09-T6 RE		PRESET,CHORUS,ROOM,HALL1,		01
-108	**VI813100**	LED	SLZ-181B-09-T6 RE		HALL2,STAGE,GRAND PIANO, HARPSI-CHORD		01
LD201	**VI813100**	LED	SLZ-181B-09-T6 RE		FUNCTION,TRANSPOSE ON,		01
-208	**VI813100**	LED	SLZ-181B-09-T6 RE		HARD,SYMPHONIC,TREMOLO, DELAY,CLASSICAL PIANO, STRINGS		01
LD301	**VS150500**	LED	SML12460C TP4 REGR		DEMO		01
LD302	**VS150500**	LED	SML12460C TP4 REGR		START/STOP		01
LD303	**VI813100**	LED	SLZ-181B-09-T6 RE		MEDIUM,SOFT,E.PIANO2,JAZZ		01
-308	**VI813100**	LED	SLZ-181B-09-T6 RE		PIANO,PIPE ORGAN,BASS		01
LD403	**VI813100**	LED	SLZ-181B-09-T6 RE		VARIATION,SPLIT,E.PIANO,		01
-408	**VI813100**	LED	SLZ-181B-09-T6 RE		ROCK PIANO,CHURCH ORGAN, JAZZ ORGAN		01
R1	**HF756820**	Carbon Resistor	8.2K 1/4 J				01
R2	**HF756820**	Carbon Resistor	8.2K 1/4 J				01
R101	**HF754470**	Carbon Resistor	47.0 1/4 J				01
R102	**HF754470**	Carbon Resistor	47.0 1/4 J				01
R201	**HF754470**	Carbon Resistor	47.0 1/4 J				01
R202	**HF754470**	Carbon Resistor	47.0 1/4 J				01
R301	**HF754470**	Carbon Resistor	47.0 1/4 J				01
R302	**HF754470**	Carbon Resistor	47.0 1/4 J				01
R501	**HF754470**	Carbon Resistor	47.0 1/4 J				01
R502	**HF754470**	Carbon Resistor	47.0 1/4 J				01
R601	**HF754470**	Carbon Resistor	47.0 1/4 J				01
R602	**HF754470**	Carbon Resistor	47.0 1/4 J				01
R701	**HF754470**	Carbon Resistor	47.0 1/4 J				01
R702	**HF754470**	Carbon Resistor	47.0 1/4 J				01
SW1	**VQ670600**	Push Switch	SDDLB1		STANDBY/ON		03
SW102	**VQ371700**	Tact Switch	SKHVBL042A H=7		DEMO,TRANSPOSE,GRAND		01
-106	**VQ371700**	Tact Switch	SKHVBL042A H=7		PIANO,HARPSI-CHORD, SPLIT		01
SW202	**VQ371700**	Tact Switch	SKHVBL042A H=7		REVERB,EFFECT,CLASSICAL		01
-206	**VQ371700**	Tact Switch	SKHVBL042A H=7		PIANO,STRINGS,VARIATION		01
SW302	**VQ371700**	Tact Switch	SKHVBL042A H=7		TOUCH,E.PIANO2,JAZZ		01
-306	**VQ371700**	Tact Switch	SKHVBL042A H=7		PIANO,PIPE ORGAN,BASS		01
SW402	**VQ371700**	Tact Switch	SKHVBL042A H=7		START/STOP,E.PIANO1,ROCK		01
-406	**VQ371700**	Tact Switch	SKHVBL042A H=7		PIANO,CHURCH ORGAN,JAZZ ORGAN		01
SW502	**VQ371700**	Tact Switch	SKHVBL042A H=7		FUNCTION,TEMPO/FUNTION#,		01
-506	**VQ371700**	Tact Switch	SKHVBL042A H=7		PRESET,-/NO		01
SW602	**VQ371700**	Tact Switch	SKHVBL042A H=7		TRACK,REC,START/STOP,		01
-606	**VQ371700**	Tact Switch	SKHVBL042A H=7		+/YES		01
VR1	**V4007500**	Slide Variable Resistor	1B10K RS30112A9A02		MASTER VOLUME		03
VR2	**V0042000**	Slide Variable Resistor	B 10.0K RS30112C9		BRILLIANCE		03
	NB037140	Switch Assembly					05

∗: New Parts

RANK: Japan only

■ P-80 OVERALL CIRCUIT DIAGRAM 1/2 (DM, JACK)

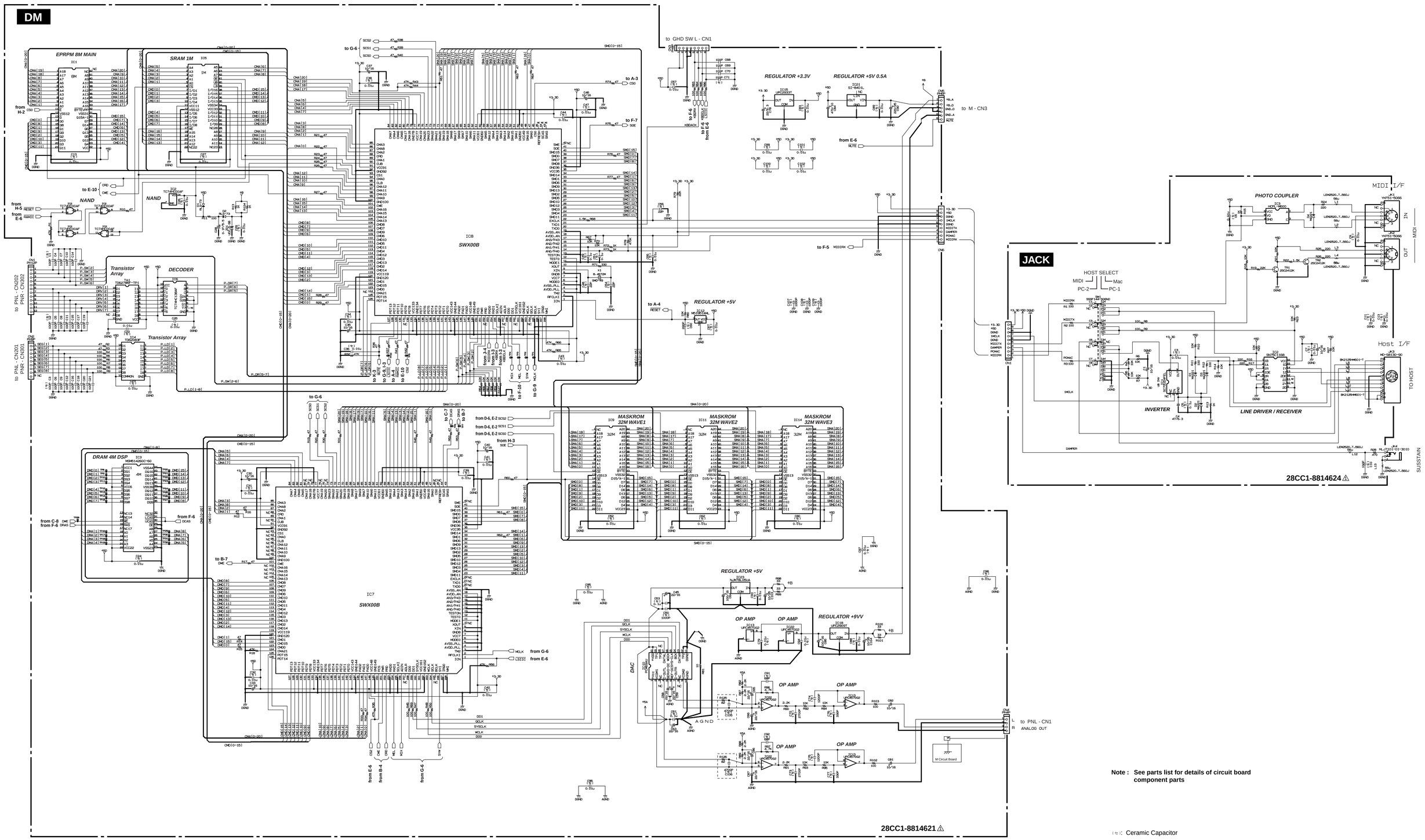

Note : See parts list for details of circuit board component parts

(セ): Ceramic Capacitor

■ P-80 OVERALL CIRCUIT DIAGRAM 2/2 (PNL, PNR, M, SW, GHD SW H, GHD SW L)

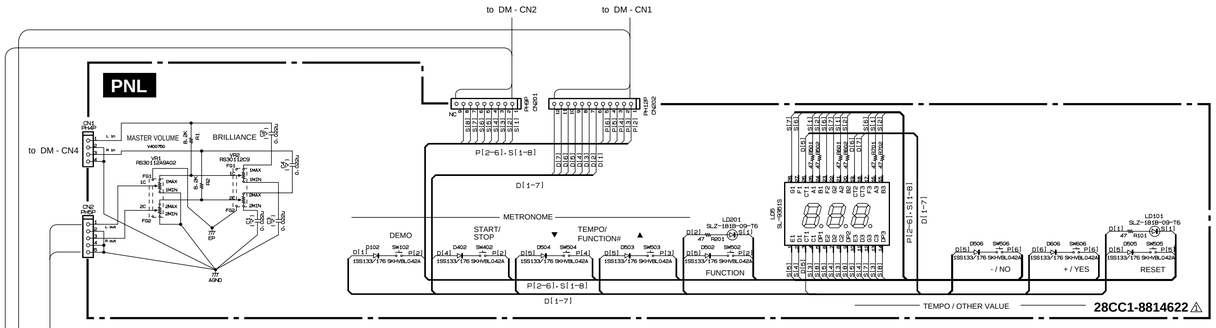

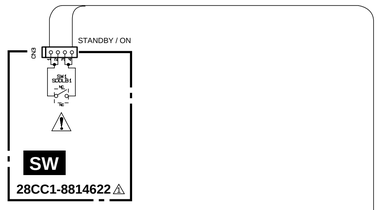

MATRIX

segment /drive	S[1]	S[2]	S[3]	S[4]	S[5]	S[6]	S[7]	S[8]
D[1]	reset LD101	chorus LD102	room LD103	hall1 LD104	hall2 LD105	stage LD106	VOICE_1 LD107	VOICE_7 LD108
D[2]	function LD201	tranapose LD202	hard LD203	symphonic LD204	tremolo LD205	delay LD206	VOICE_2 LD207	VOICE_8 LD208
D[3]	rec1_red LD301	rec2_red LD302	medium LD303	soft LD304	VOICE_6 LD305	VOICE_3 LD306	VOICE_9 LD307	VOICE_12 LD308
D[4]	rec1_green LD401	rec2_green LD402	variation LD403	split LD404	VOICE_5 LD405	VOICE_4 LD406	VOICE_10 LD407	VOICE_11 LD408
D[5]	7seg._A1	7seg._B1	7seg._C1	7seg._D1	7seg._E1	7seg._F1	7seg._G1	7seg._DP1
D[6]	7seg._A2	7seg._B2	7seg._C2	7seg._D2	7seg._E2	7seg._F2	7seg._G2	7seg._DP2
D[7]	7seg._A3	7seg._B3	7seg._C3	7seg._D3	7seg._E3	7seg._F3	7seg._G3	7seg._DP3

pushsw /drive	P[2]	P[3]	P[4]	P[5]	P[6]
D[1]	demo SW102	tranapose SW103	VOICE_1 SW104	VOICE_7 SW105	split SW106
D[2]	reverb SW202	effect SW203	VOICE_2 SW204	VOICE_8 SW205	variation SW206
D[3]	touch SW302	VOICE_6 SW303	VOICE_3 SW304	VOICE_9 SW305	VOICE_12 SW306
D[4]	metronome SW402	VOICE_5 SW403	VOICE_4 SW404	VOICE_10 SW405	VOICE_11 SW406
D[5]	function SW502	tempo up SW503	tempodown SW504	REMET SW505	no SW506
D[6]	rec2 SW602	rec1 SW603	record SW604	start/stop SW605	yes SW606

VOICE NAME

VOICE1	VOICE2	VOICE3	VOICE4	VOICE5	VOICE6
grand piano	classic piano	jazz piano	rock piano	elec. piano1	elec. piano2
VOICE7	VOICE8	VOICE9	VOICE10	VOICE11	VOICE12
harpsichord	strings	pipe organ	church organ	chapel organ	bass

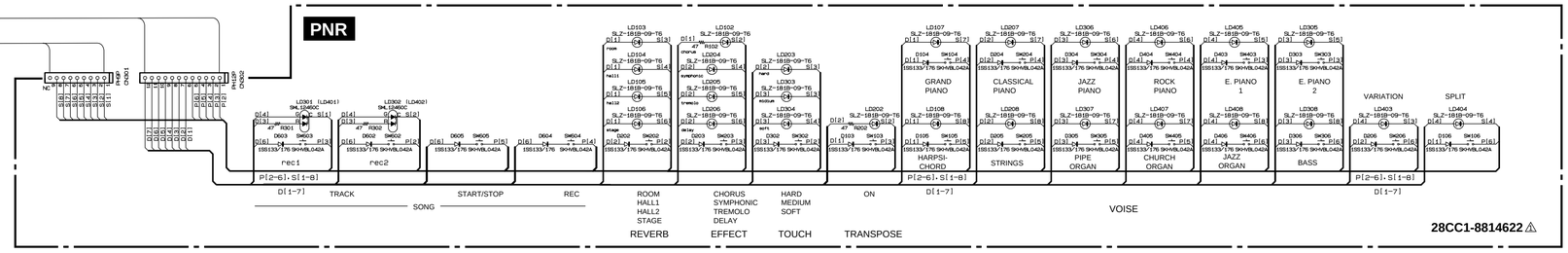

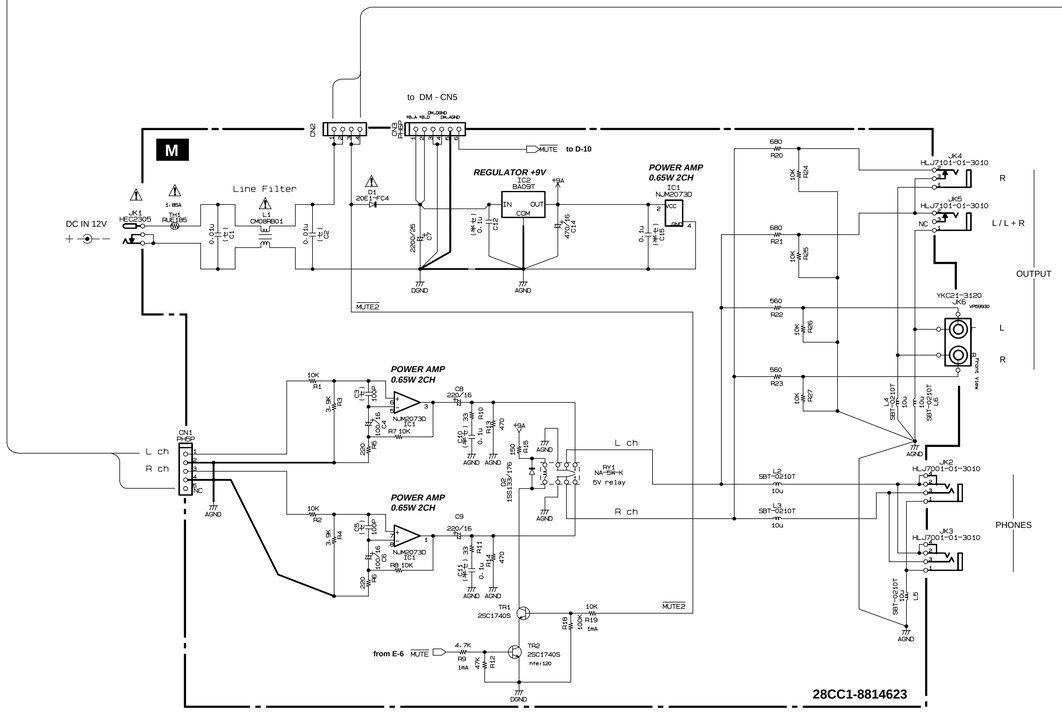

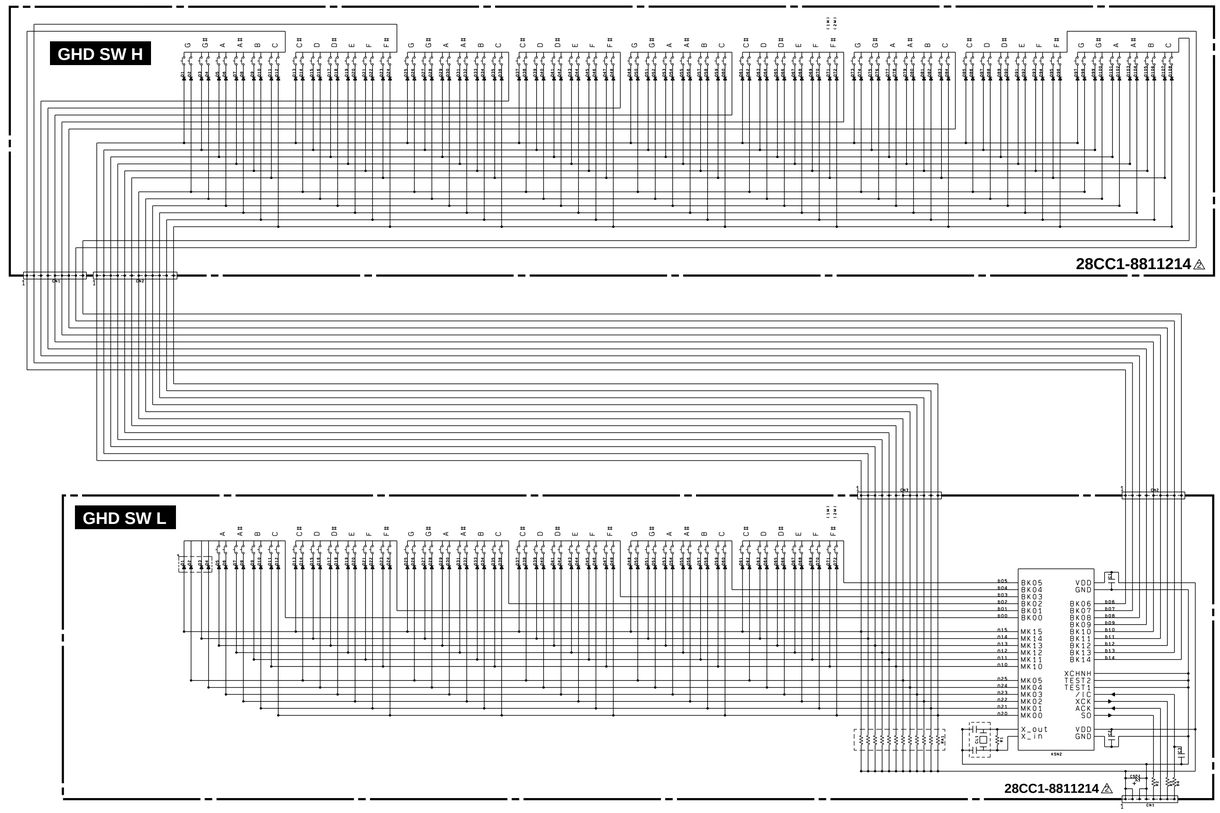

■ **TO SERVICE PERSONNEL**
Critical Components Infomation
Components having special characteristics are marked ⚠ and must be replaced with parts having specifications equel to those originally installed.

Note : See parts list for details of circuit board component parts

(セ): Ceramic Capacitor
(マ): Mylar Capacitor
(半セ): Semiconductive Capacitor

