PORTATONE

MIE-3XG

SERVICE MANUAL



CONTENTS

SPECIFICATIONS 3
CIRCUIT BOARD LAYOUT & WIRING 4
PANEL LAYOUT 6
DISASSEMBLY PROCEDURE 7
LSI PIN DESCRIPTION 12
IC BLOCK DIAGRAM 16
CIRCUIT BOARDS 18
TEST PROGRAM 31
MIDI IMPLEMENTATION CHART 34
PARTS LIST
BLOCK DIAGRAM
OVERALL CIRCUIT DIAGRAM

PK 001751

YAMAHA

HAMAMATSU, JAPAN

Copyright (c) Yamaha Corporation. All rights reserved. PDF KM '06.04

IMPORTANT NOTICE

This manual has been provided for the use of authorized Yamaha Retailers and their service personnel. It has been assumed that basic service procedures inherent to the industry, and more specifically Yamaha Products, are already known and understood by the users, and have therefore not been restated.

WARNING : Failure to follow appropriate service and safety procedures when servicing this product may result in personal injury, destruction of expensive components and failure of the product to perform as specified. For these reasons, we advise all Yamaha product owners that all service required should be performed by an authorized Yamaha Retailer or the appointed service representative.

IMPORTANT : This presentation or sale of this manual to any individual or firm does not constitute authorization certification, recognition of any applicable technical capabilities, or establish a principal-agent relationship of any form.

The data provided is belived to be accurate and applicable to the unit(s) indicated on the cover. The research engineering, and service departments of Yamaha are continually striving to improve Yamaha products. Modifications are, therefore, inevitable and changes in specification are subject to change without notice or obligation to retrofit. Should any discrepancy appear to exist, please contact the distributor's Service Division.

WARNING : Static discharges can destroy expensive components. Discharge any static electricity your body may have accumulated by grounding yourself to the ground bus in the unit (heavy gauge black wires connect to this bus.)

IMPORTANT : Turn the unit OFF during disassembly and parts replacement. Recheck all work before you apply power to the unit.

WARNING: CHEMICAL CONTENT NOTICE!

The solder used in the production of this product contains LEAD. In addition, other electrical/electronic and/or plastic (Where applicable) components may also contain traces of chemicals found by the California Health and Welfare Agency (and possibly other entities) to cause cancer and/or birth defects or other reproductive harm.

DO NOT PLACE SOLDER, ELECTRICAL/ELECTRONIC OR PLASTIC COMPONENTS IN YOUR MOUTH FOR ANY REASON WHAT SO EVER!

Avoid prolonged, unprotected contact between solder and your skin! When soldering, do not inhale solder fumes or expose eyes to solder/flux vapor!

If you come in contact with solder or components located inside the enclosure of this product, wash your hands before handling food.

■ WARNING

Components having special characteristics are marked ⚠ and must be replaced with parts having specification equal to those originally installed.

SPECIFICATIONS

Keyboards
Keyboard: 61 regular-size
Touch Response: Initial
Type: 16 M

Display
7 SEG LED X 2

Setup
STANDBY/ON, LEFT/MASTER VOLUME, RIGHT/ MASTER VOLUME, ACCOMP VOLUME, LEFT SPEAKER, RIGHT SPEAKER

System
TONE GENERATOR: SWX00 X 2
MAIN CPU: SH2 (16 bit/ROM)
Keyboard Scan CPU: µPD789022GB
PANEL Scan CPU: MN101C027YB
PROGRAM ROM: 16 Mbit
DATA ROM: same PROGRAM ROM
WAVE ROM: 16 Mbit
PROGRAM RAM: DRAM 16 Mbit
DATA RAM: same PROGRAM RAM
DSP RAM: DRAM 4 Mbit
DSP: SWX00 stored

Voice
Polyphony: 32
LEFT and RIGHT
(PIANO, E.PIANO, HARPSI., ORGAN, MARIMBA, TRUMPET, CLARINET, SAX, GUITAR, RK GUITAR, STRINGS, BASS, SYNTH, SYNTH PAD, KBD PERC, ASSIGN)

Tone numver
15 Panel + Assignable + 480XG

Effects
Reverb: 8 types
DSP: 38 types

Overall controls
Tempo: 32 ~ 280
Transpause: –12 ~ 0 ~ +12
Tuning: A3 = 440 Hz

Style
Style number: 15 + Assignable
(50'S, BALLAD, COUNTRY, CTRY RK, LATIN RK, MARCH, POP, REGGAE, ROCK, SALSA,SAMBA, SWING, 2 BEAT, 3 BEAT, 4 BEAT, ASSIGN)
Section: Intro/Ending/Main/Fill
Fingering: Single, Fingered

Song Record
Song number: 1 Song
Track number: 1 Melody (MELODY REC) + 1 Accomp. (ACCOMP REC)

Display
7 SEG LED X 2

Auxiliary jacks
PHONES (L/R), DC IN, MIDI IN, MIDI OUT, MIDI THRU, MERGE IN, AUDIO OUT, AUDIO IN

Amplifier
6 W + 6 W (EIAJ)

Speakers
Size: 12 cm X 2

Power Supply
Adaptor: PA-5D
Power Consumption: 27 W

Dimensions
952 (W) X 387 (D) X 150 (H)

Weight
7.8 kg

Optional Accessories
STAND: L-6
Headphone: HPE-150
Adaptor: PA-5D

■ CIRCUIT BOARD LAYOUT & WIRING

• Lower Case with Speaker

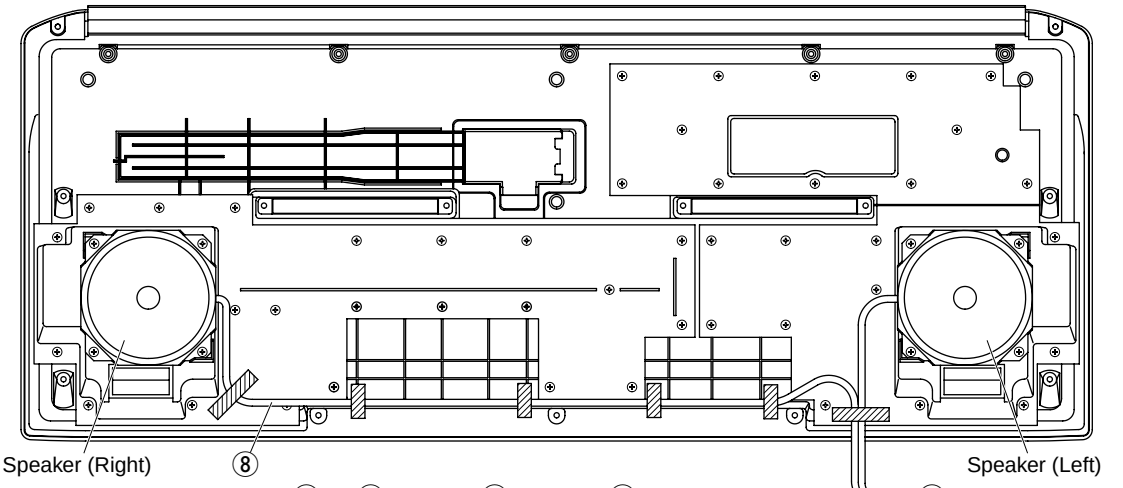

• Upper Case Assembly

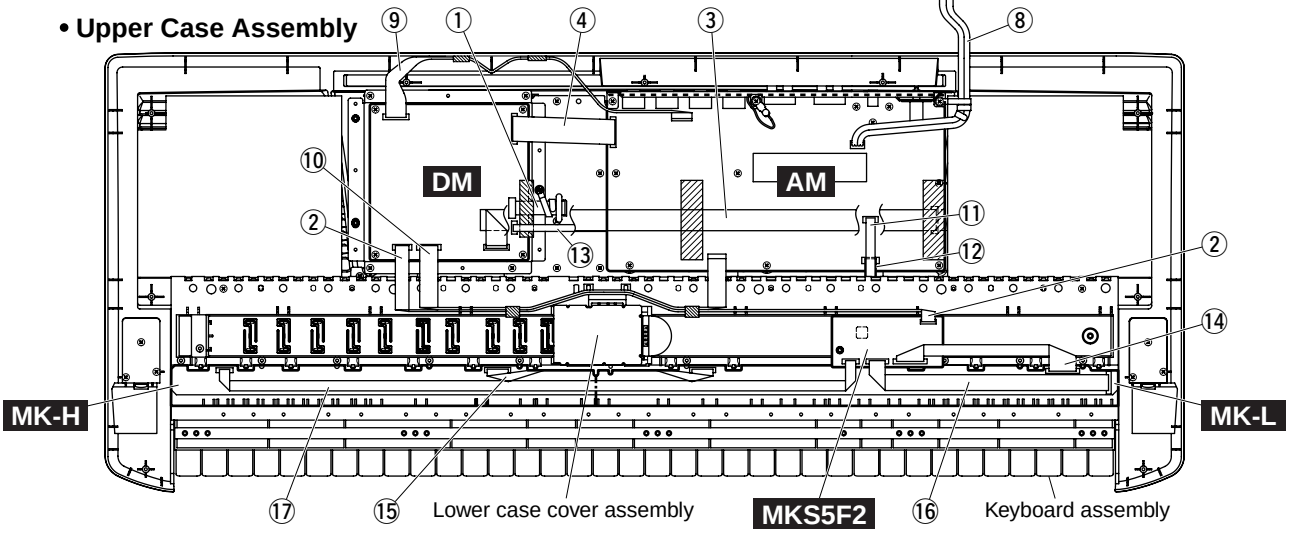

• Upper Case Assembly

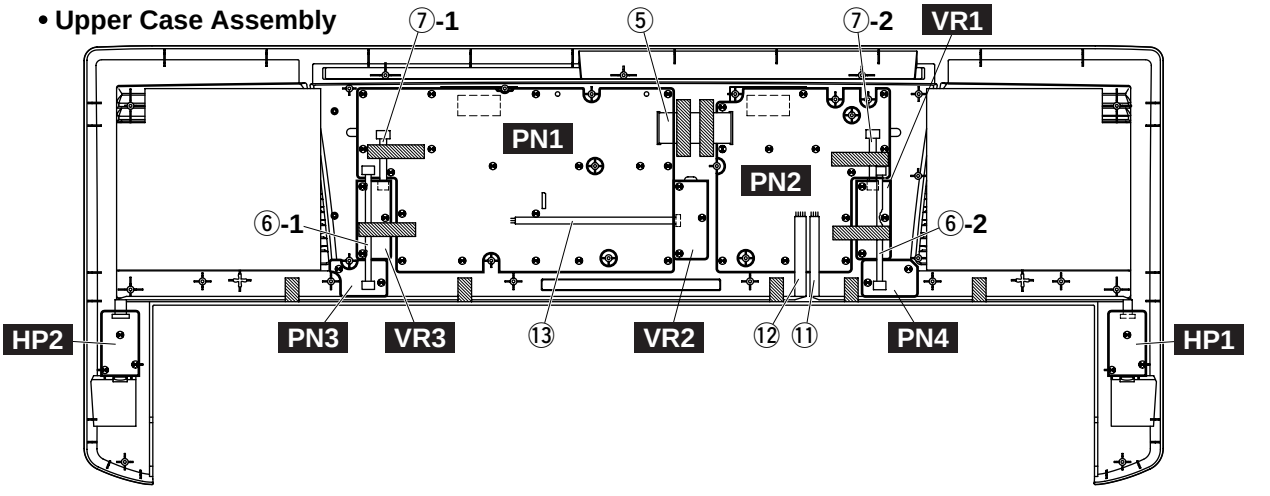

No.	Unit Name	Location	Parts No.	Connector Assembly	Destination						Remarks
①	Overall Assembly	120	V6273600	PN1	DM-CN4	*1	*5	PN1-CN12	*1	*5	11P L=80
②		200	(V543540)	KB	DM-CN2	*1	*4	MKS5F-CN1	*1	*4	6P
③		230	(WG49900)	PS	AM-CN2	*1	*4	DM-CN1	*1	*4	7P
④		260	(WG49880)	AN	AM-CN1	*1	*7	DM-CN7	*1	*7	11P L=100
⑤	Upper Case Assembly	250	(V625840)	PN2	PN1-CN101	*1	*4	PN2-CN100	*1	*4	26P
⑥-1		260	(V543410)	PN3	PN1-CN6	*1	*4	PN3-CN7	*1	*4	4P
⑥-2					PN2-CN4	*1	*4	PN4-CN5	*1	*4	
⑦-1		270	(V543420)	PN4	PN1-CN13	*1	*4	VR3-CN5	*1	*4	5P
⑦-2					PN2-CN14	*1	*4	VR1-CN3	*1	*4	
⑧	Lower Case with Speaker	40	(WG50110)	SP	Speakers	*2	*6	AM-CN7	*1	*4	6P
⑨	AM Circuit Board	2	(WG49890)	DJ	AM-CN4	*3		DM-CN6	*1	*4	9P
⑩		3	(V543550)	PO	AM-CN3	*3		DM-CN5	*1	*4	8P
⑪	HP1 Circuit Board	1	(V543590)	HP1	HP1-CN1	*3		AM-CN5	*1	*4	4P
⑫	HP2 Circuit Board	2	(V543600)	HP2	HP2-CN2	*3		AM-CN6	*1	*4	5P
⑬	VR2 Circuit Board	3	(V543530)	VR2	VR2-CN4	*3		DM-CN3	*1	*4	3P
⑭	Keyboard Assembly	S4	VU958900	Cable	MK-L	*1	*4	MKS5F2-CN2	*1	*4	12P
⑮		S5	VU659500	Cable	MK-L	*1	*4	MK-H	*1	*4	12P
⑯		S6	VU659400	Cable	MK-L	*1	*4	MKS5F2-CN3	*1	*4	7P
⑰		S7	VU659600	Cable	MK-H	*1	*4	MKS5F2-CN4	*1	*4	5P

*The parts with "( )" in "**Part No.**" are not available as spare parts.
*1: Installation
*2: Manual soldering
*3: Dip soldering
*4: Edge mark is adjusted to Pin 1 mark (△ mark).
*5: Plated terminal top side view.
*6: Speaker-R (Red: +, Blue: –, Gray: Center), Speaker-L (White: +, Black: –, Gray: Center)
*7: To be connected in the correct direction as can be inserted.

Caution: Be sure to attach the removed filament tape just as it was before removal.

PANEL LAYOUT

• Rear Panel

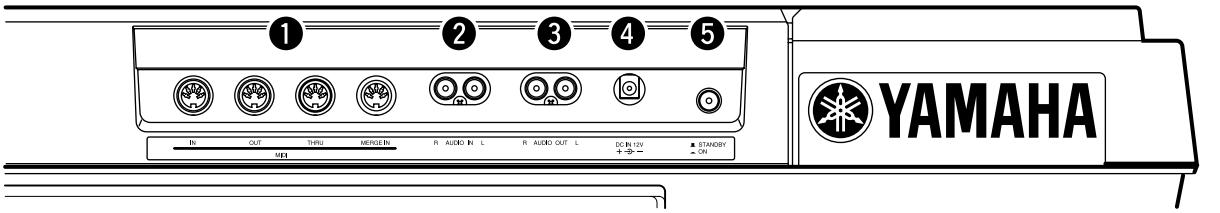

❶ MIDI jacks
❷ AUDIO IN jacks
❸ AODIO OUT jacks
❹ DC IN jack
❺ STANDBY/ON switch

❻ HAEDPHONES AND HEADPHONE jacks
❼ Keyboard split divider
❽ Speakers
❾ ENTER button
❿ MODE buttons
⓫ VOLUME controls
⓬ SETTINGS AND INDICATORS
⓭ VOICE selection
⓮ INTRO, MAIN and ENDING buttons
⓯ SYNC START, START, AND STOP buttons
⓰ ACCOMPANIMENT VOLUME control
⓱ STYLE selection
⓲ METRONOME AND TOUCH buttons
⓳ RECORDING AND PLAYBACK buttons

• Front Panel

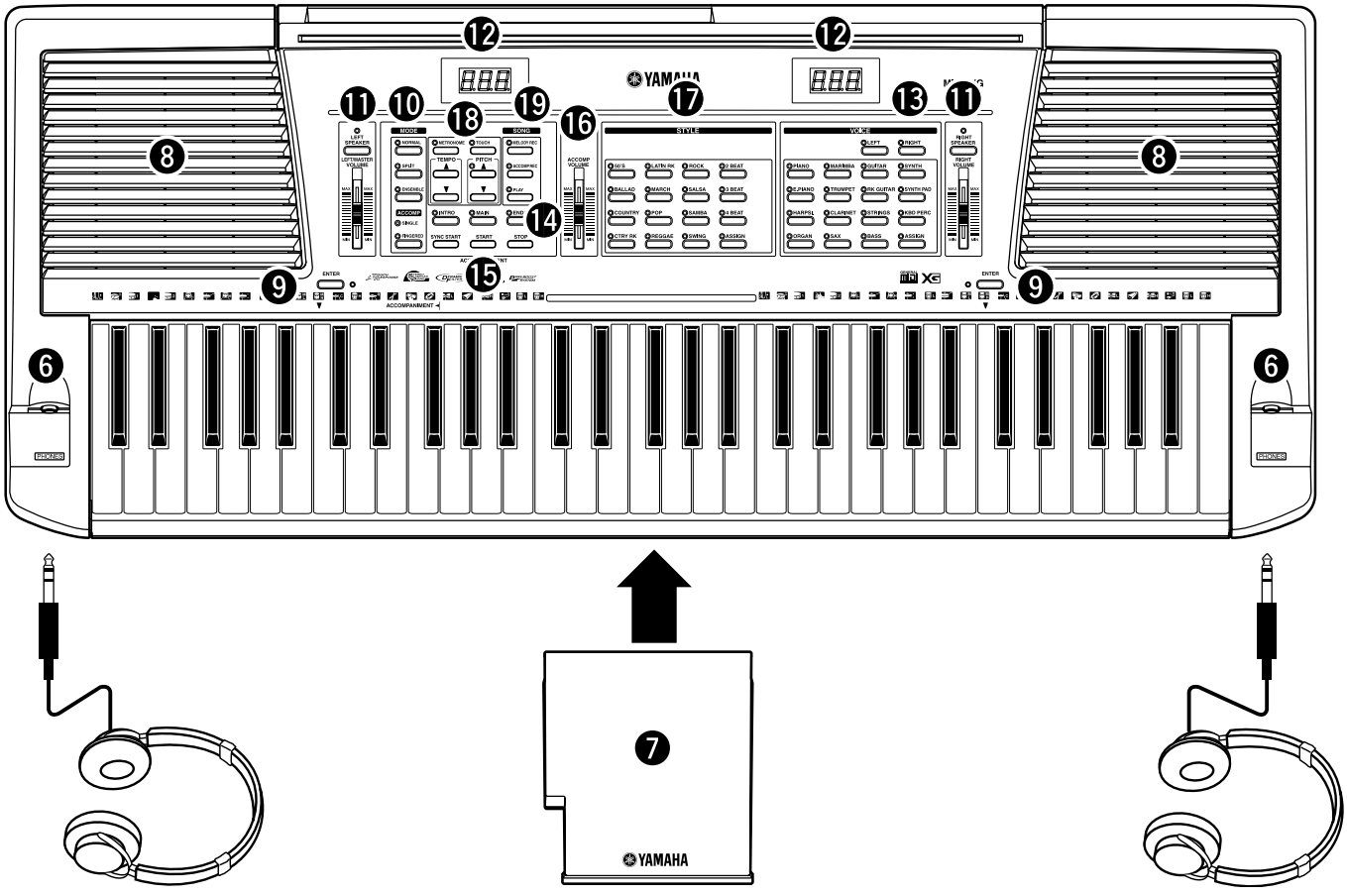

HEADPHONE

Center Cover

HEADPHONE

■ DISASSEMBLY PROCEDURE

Caution: Be sure to attach the removed filament tape just as it was before removal.

⚠ **Notes on Flat Cable**
Contacts are visible through the back side. When connecting to the connector, pay attention not to insert the cable inversely. (Photo 1)



Front side (Printed side) Back side

(Photo 1)

1. Lower Case with Speaker (Time required: About 3 minutes)

1-1 Remove the four (4) screws marked [170A] and fourteen (14) screws marked [190A]. The lower case with speaker can then be removed. (Fig.1)

• **Bottom view**

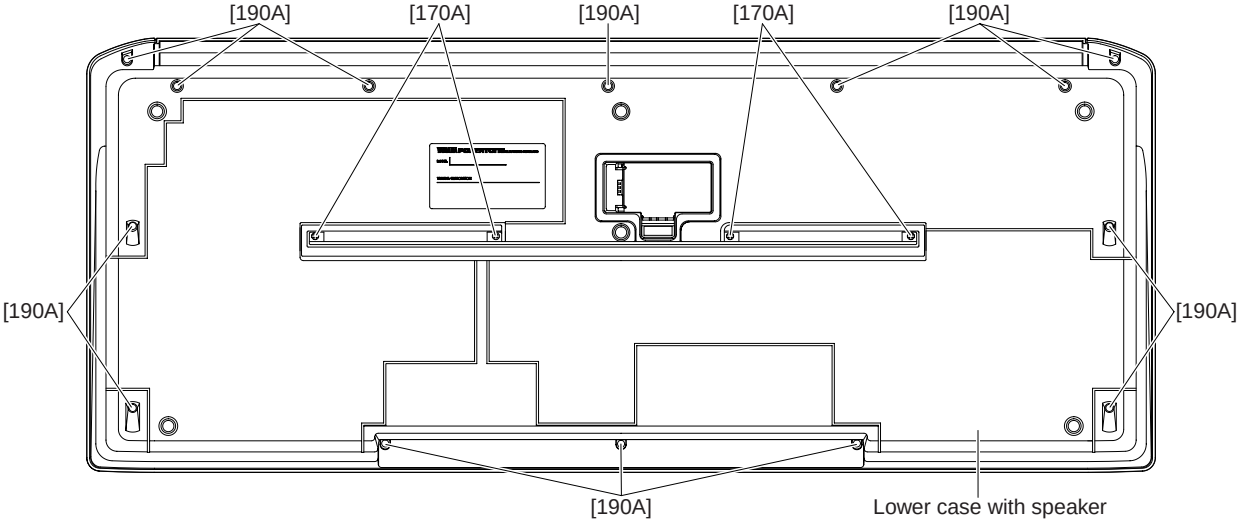

[170A]: Bind Head Tapping Screw-P 3.0X25 MFZN2W3 (WE995300)
[190A]: Bind Head Tapping Screw-P 3.0X12 MFZN2W3 (WE972900)

(Fig.1)

2. Speakers (Left and Right) (Time required: About 4 minutes)

2-1 Remove the lower case with speaker. (See procedure 1)

2-2 Remove the four (4) screws marked [30A]. The speaker can then be removed. (Fig.2)

* **The right and left speakers can be removed in the same way. (Fig.2)**

• **Top view**

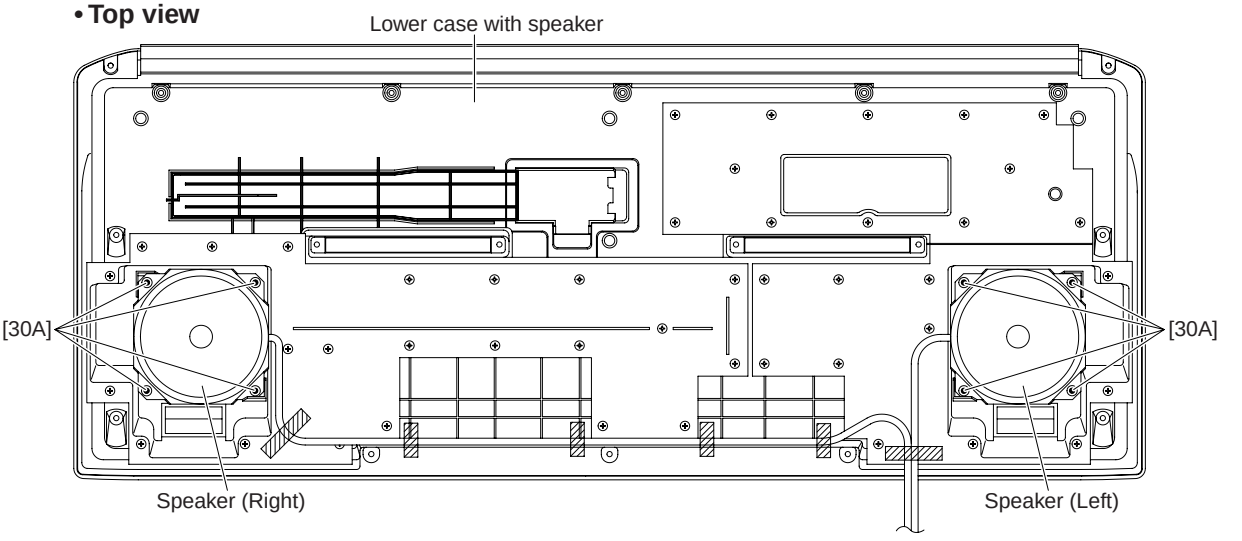

[30A]: Bind Head Tapping Screw-B 4.0X8 MFZN2W3 (WE974600)

(Fig.2)

3. AM Circuit Board

(Time required: About 5 minutes)

3-1 Remove the lower case with speaker. (See procedure 1)

3-2 Pull out the push knob from the rear side. (Fig.3)

3-3 Remove the nine (9) screws marked [160A] and three (3) screws marked [190B]. The AM circuit board can then be removed. (Fig.3)

* **The push knob is not part of the AM circuit board. When replacing the AM circuit board, be sure to reinstall the push knob to the new AM circuit board.**

4. DM Circuit Board

(Time required: About 4 minutes)

4-1 Remove the lower case with speaker. (See procedure 1)

4-2 Remove the four (4) screws marked [180]. The DM circuit board can then be removed. (Fig.3)

5. PN1 Circuit Board

(Time required: About 9 minutes)

5-1 Remove the lower case with speaker. (See procedure 1)

5-2 Remove the AM circuit board. (See procedure 3)

5-3 Remove the four (4) screws marked [160B]. The shield cover U can then be removed together with the DM circuit board. (Fig.3)

5-4 Remove the eighteen (18) screws marked [240A]. The PN1 circuit board can then be removed. (Fig.4)

6. PN2 Circuit Board

(Time required: About 7 minutes)

6-1 Remove the lower case with speaker. (See procedure 1)

6-2 Remove the AM circuit board. (See procedure 3)

6-3 Remove the twelve (12) screws marked [240B]. The PN2 circuit board can then be removed. (Fig.4)

• Rear view

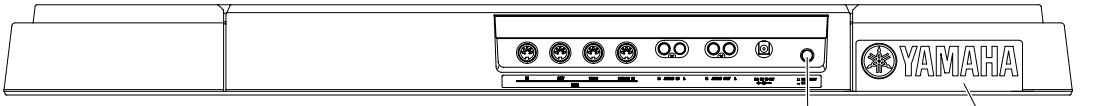

• Bottom view

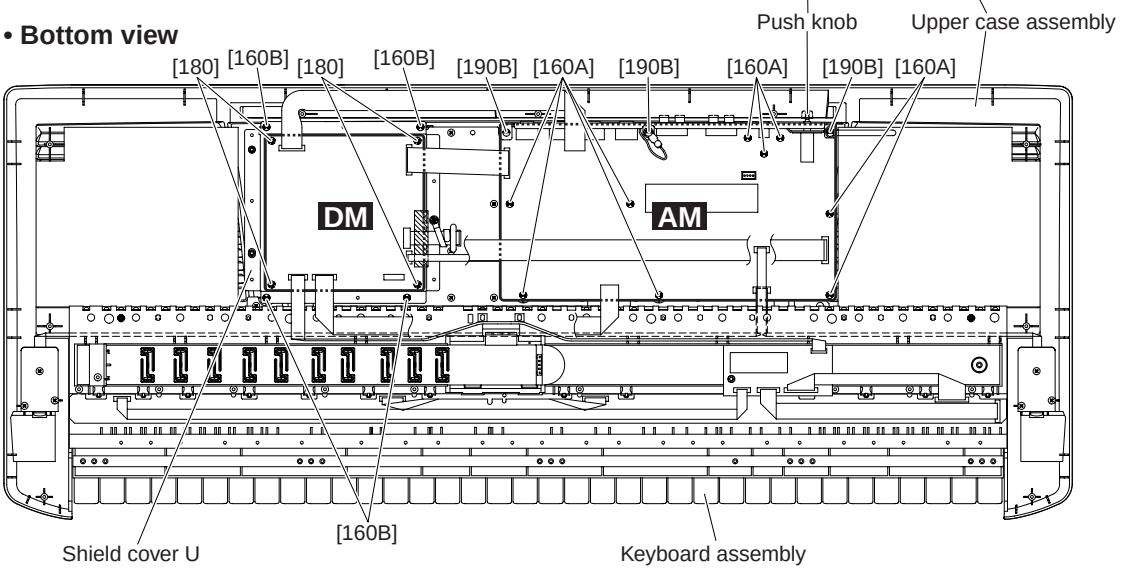

[160]: Bind Head Tapping Screw-P 3.0X8 MFZN2W3 (WE774800)

[180]: Bind Head Tapping Screw-B 3.0X6 MFZN2B3 (WF028600)

[190B]: Bind Head Tapping Screw-P 3.0X12 MFZN2W3 (WE972900)

(Fig.3)

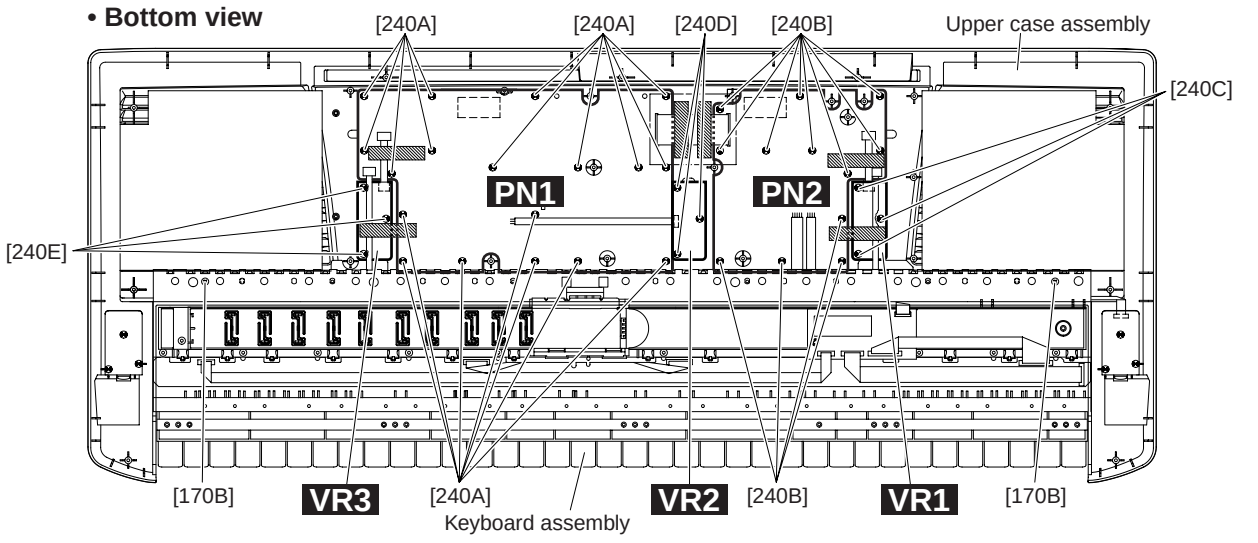

[170B]: Bind Head Tapping Screw-P 3.0X25 MFZN2W3 (WE995300)
[240]: Bind Head Tapping Screw-P 3.0X8 MFZN2W3 (WE774800)

(Fig.4)

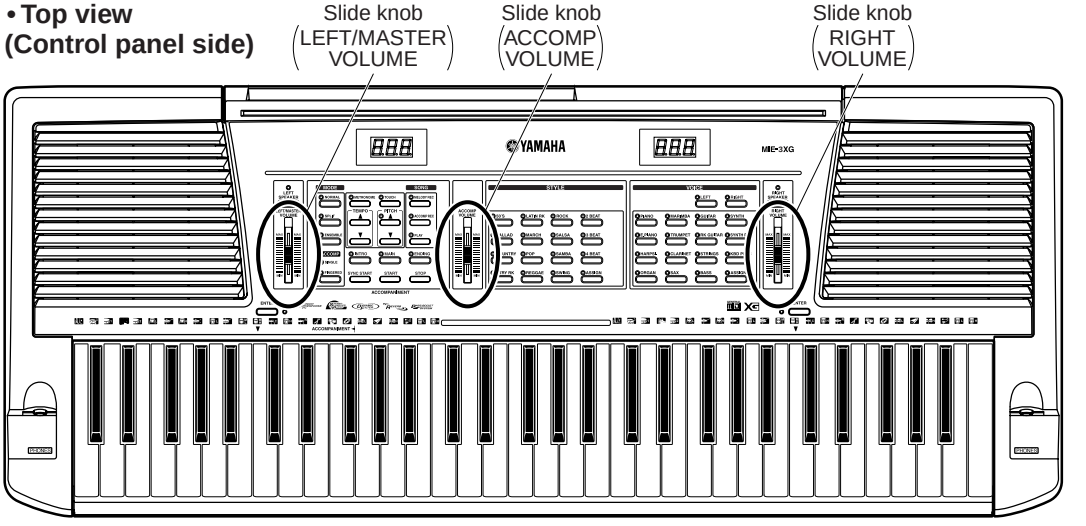

(Fig.5)

7. VR1 Circuit Board

(Time required: About 6 minutes)

7-1 Remove the slide knob (LEFT/MASTER VOLUME) from the control panel. (Fig.5, Fig.6)
7-2 Remove the lower case with speaker. (See procedure 1)
7-3 Remove the AM circuit board. (See procedure 3)
7-4 Remove the three (3) screws marked [240C]. The VR1 circuit board can then be removed. (Fig.4)

8. VR2 Circuit Board

(Time required: About 6 minutes)

8-1 Remove the slide knob (ACCOMP VOLUME) from the control panel. (Fig.5, Fig.6)
8-2 Remove the lower case with speaker. (See procedure 1)
8-3 Remove the AM circuit board. (See procedure 3)
8-4 Remove the three (3) screws marked [240D]. The VR2 circuit board can then be removed. (Fig.4)

9. VR3 Circuit Board

(Time required: About 4 minutes)

9-1 Remove the slide knob (RIGHT VOLUME) from the control panel. (Fig.5, Fig.6)
9-2 Remove the lower case with speaker. (See procedure 1)
9-3 Remove the four (4) screws marked [160B]. The shield cover U can then be removed together with the DM circuit board. (Fig.3)
9-4 Remove the three (3) screws marked [240E]. The VR3 circuit board can then be removed. (Fig.4)

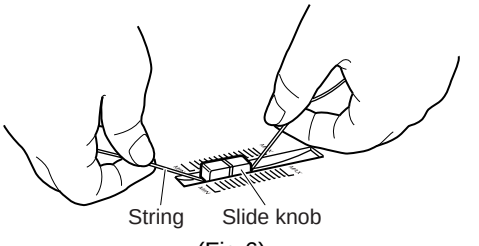

(Fig.6)

• **Bottom view**

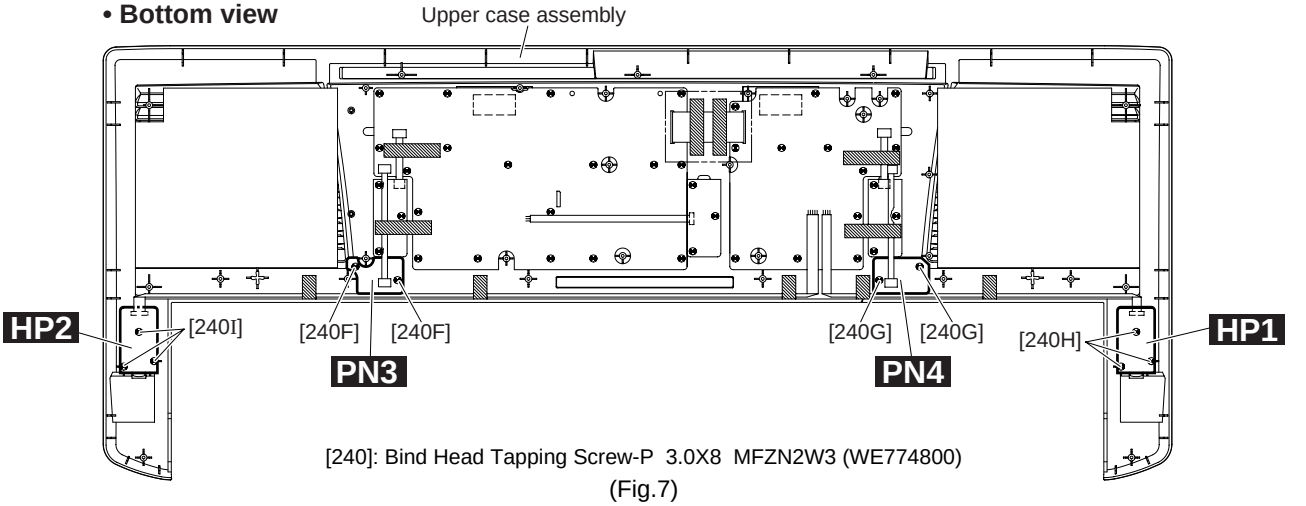

[240]: Bind Head Tapping Screw-P 3.0X8 MFZN2W3 (WE774800)

(Fig.7)

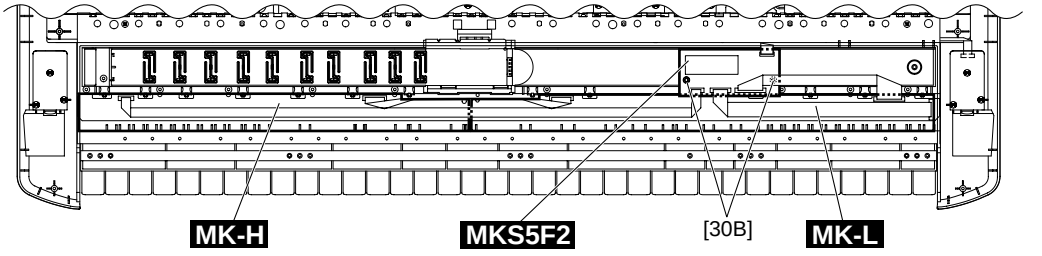

[30B]: Bind Head Tapping Screw-P 3.0X8 MFZN2B3 (WF266600)

(Fig.8)

10. Keyboard Assembly

(Time required: About 3 minutes)

10-1 Remove the lower case with speaker. (See procedure 1)

10-2 Remove the two (2) screws marked [170B]. The keyboard assembly can then be removed. (Fig.4)

11. PN3 Circuit Board, PN4 Circuit Board, HP1 Circuit Board, HP2 Circuit Board

(Time required: About 4 minutes each)

11-1 Remove the lower case with speaker. (See procedure 1)

11-2 Remove the keyboard assembly. (See procedure 10)

11-3 **PN3 Circuit Board:**

11-3-1 Remove the two (2) screws marked [240F]. The PN3 circuit board can then be removed. (Fig.7)

11-4 **PN4 Circuit Board:**

11-4-1 Remove the two (2) screws marked [240G]. The PN4 circuit board can then be removed. (Fig.7)

11-5 **HP1 Circuit Board:**

11-5-1 Remove the three (3) screws marked [240H]. The HP1 circuit board can then be removed. (Fig.7)

11-6 **HP2 Circuit Board:**

11-6-1 Remove the three (3) screws marked [240I]. The HP2 circuit board can then be removed. (Fig.7)

12. Disassembling the Keyboard Assembly

12-1 Remove the lower case with speaker. (See procedure 1)

12-2 Remove the keyboard assembly. (See procedure 10)

12-3 **MKS5F2 Circuit Board**

(Time required: About 4 minutes)

12-3-1 Remove the two (2) screws marked [30B]. The MKS5F2 circuit board can then be removed. (Fig.8)

* **When connecting the CN2 in the DM circuit board and the CN1 in the MKS5F2 circuit board, pay attention to the direction of the connectors. If the connectors are inserted inversely, the MKS5F2 circuit board will be damaged.**

12-4 **MK-L Circuit Board and MK-H Circuit Board**

(Time required: About 5 minutes)

12-4-1 Push the fifteen (15) hooks (A) fixing the MK-L circuit board and MK-H circuit board in the direction of the arrow to unhook and remove the MK-L circuit board and MK-H circuit board. (Fig.9)

12-5 **Rubber Contact:**

12-5-1 Remove the rubber contacts. (Fig.9) (Photo 2)

12-6 **White Keys and Black Keys:**

12-6-1 Remove the twenty-one (21) screws marked [140] fixing the white keys and black keys and remove the black keys in the order of pitch from lowest to highest. (Fig.10)

12-6-2 Remove the white keys DFA and white key C'. (Fig.10)

12-6-3 Remove the white keys CEGB in the order of pitch from highest to lowest. (Fig.10)

* **When removing a key, lift its front portion and slide toward you to remove.**

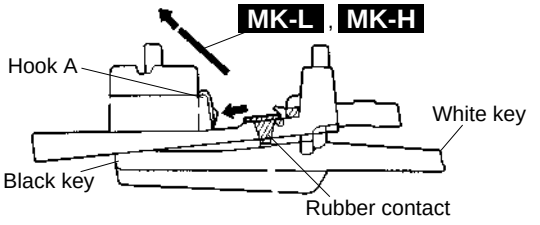

(Fig.9)

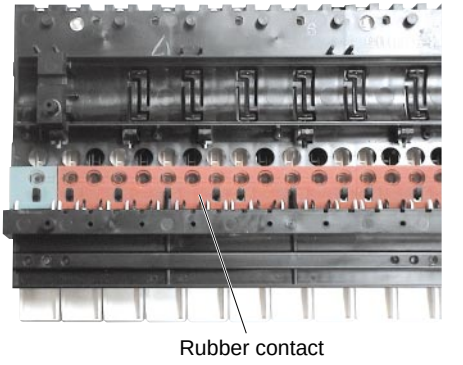

(Photo 2)

13. Assembling the Keyboard Assembly

13-1 Fit the white keys CEGB in the order of pitch from lowest to highest. (Fig.10)

13-2 Fit the white keys DFA and white key C'. (Fig.10)

13-3 Fit the black keys in the order of pitch from highest to lowest and install with the twenty-one (21) screws marked [140]. (Fig.10)

* **Insert the protruding portion of a white or black key into the [C] in the frame before installing the key. (Photo 3, Photo 4, Photo 5)**

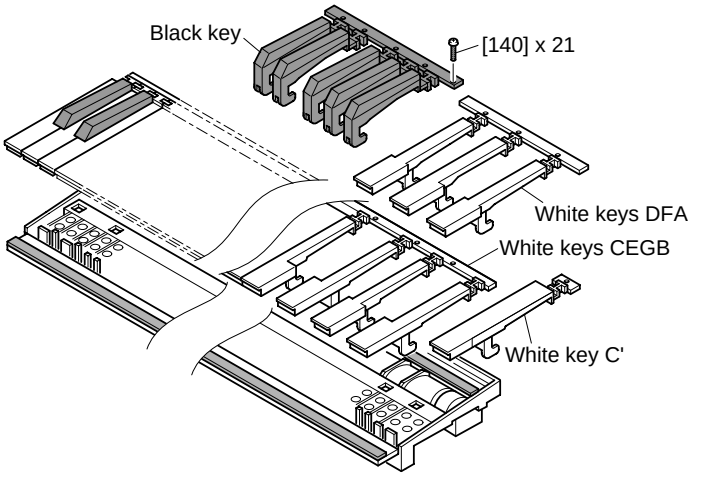

[140]: Bind Head Tapping Screw-P 3.0X16 MFZN2W3 (WE973000) or
Bind Head Tapping Screw-P 3.0X16 MFZN2B3 (WE983200)

(Fig.10)

13-4 While pushing keys upward, fit the rubber contacts. (Fig.11, Fig.12)

* **Fit a rubber contact while lifting the both sides of the frame so that a rubber contact may not be pushed upward by a key.**

13-5 Install the MK-L circuit board and MK-H circuit board by fitting them into the hook (B). (Fig.13)

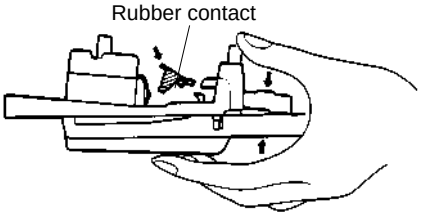

(Fig.11)

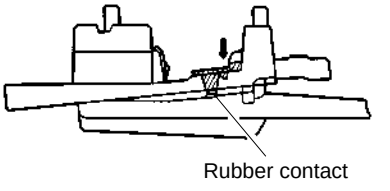

(Fig.12)

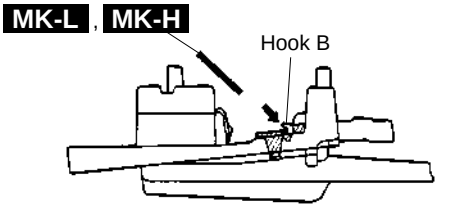

(Fig.13)

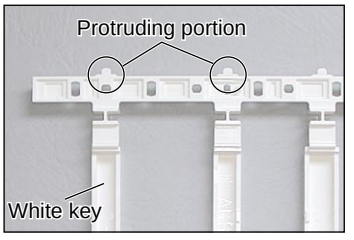

(Photo 3)

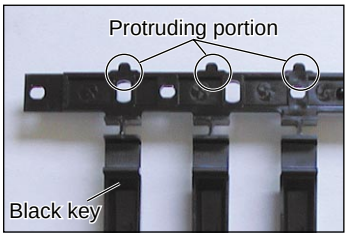

(Photo 4)

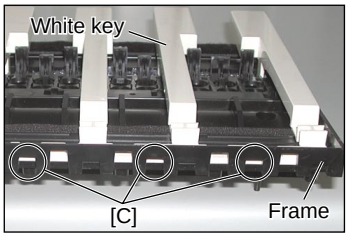

(Photo 5)

■ LSI PIN DESCRIPTION

MN101C027YB (XS711200) **CPU** **12**
μ**PD789022GB-A15-8E** (XZ560100) **CPU KBS** **12**
HD6437042AH05FV (X7205100) **CPU** **13**
HG73C205AFD (XU947C00) **SWX00B** (Tone Generator) **14**
MBCG46183-129 (XV833A00) **SIO4** (Gate Array) **15**
AD1854JRSRL (XY782A00) **DAC** (Digital to Analog Converter) **15**

● **MN101C027YB** (XS711200) **CPU**

PN1: IC001

PIN NO.	NAME	I/O	FUNCTION	PIN NO.	NAME	I/O	FUNCTION
1	S1	I	Switch matrix data	33	S12	I	Switch matrix data
2	S2	I		34	S13	I	
3	S3	I		35	S14	I	
4	S4	I		36	TXD	O	MIDI transmit data
5	S5	I		37	S15	I	Switch matrix data
6	VREF+	-	Power supply (+5V, analog)	38	S16	I	
7	VDD	-	Power supply (+5V)	39	S17	I	
8	OSC2	O	Crystal oscillator (8MHz)	40	S18	I	
9	OSC1	I	Crystal oscillator (8MHz)	41	L16	O	LED drive data
10	VSS	-	Ground	42	L17	O	
11	XI	I	Not used	43	L18	O	
12	XO	O	Not used	44	L19	O	
13	MMOD	I	Memory mode select (Grounded)	45	L8	O	
14	RD0	O	Rotary encoder data	46	L9	O	
15	RXD	I	MIDI receive data	47	L10	O	
16	D0	O	LED and switch drive data	48	L11	O	
17	D1	O		49	L12	O	
18	D2	O		50	L13	O	
19	D3	O		51	L14	O	
20	D4	O		52	L15	O	
21	/RST	I	Reset	53	L7	O	LED and switch drive data
22	D5	O	LED and switch drive data	54	L6	O	
23	D6	O		55	L5	O	
24	D7	O		56	L4	O	
25	D8	O		57	L3	O	
26	D9	O		58	L2	O	
27	S6	I	Switch matrix data	59	L1	O	
28	S7	I		60	L0	O	
29	S8	I		61	VREF	-	Grounded
30	S9	I		62	AD0	I	Analog input
31	S10	I		63	AD1	I	Analog input
32	S11	I		64	S0	I	Switch matrix data

● μ**PD789022GB-A15-8E** (XZ560100) **CPU KBS**

MKS5F2: IC1

PIN NO.	NAME	I/O	FUNCTION	PIN NO.	NAME	I/O	FUNCTION
1	P12	I/O	Port 1	23	P32/INTP2/CPT2	I/O	Port 3/External interrupt input/Capture edge input
2	P11	I/O		24	P31/INTP1	I/O	Port 3/External interrupt input
3	P10	I/O		25	P30/INTP0	I/O	
4	P47/KR7	I/O	Port 4/Key return signal detection input	26	P22/RXD/SI0	I/O	Port 2/Asynchronous serial interface serial data input/Serial interface serial data input
5	P46/KR6	I/O		27	P21/TXD/SO0	I/O	Port 2/Asynchronous serial interface serial data output/Serial interface serial data output
6	P45/KR5	I/O		28	P20/ASCK/SCK0	I/O	Port 2/Asynchronous serial interface serial clock input/Serial interface serial clock
7	P44/KR4	I/O		29	P07	I/O	Port 0
8	P43/KR3	I/O		30	P06	I/O	
9	P42/KR2	I/O		31	P05	I/O	
10	P41/KR1	I/O		32	P04	I/O	
11	P40/KR0	I/O		33	P03	I/O	
12	NC			34	P02	I/O	
13	IC		Internally connected (N.C.)	35	P01	I/O	
14	X2		Clock	36	P00	I/O	
15	X1	I		37	NC		
16	VSS0		Ground	38	VDD1		Power supply
17	VDD0		Power supply	39	VSS1		Ground
18	/RESET	I	System reset	40	P17	I/O	Port 1
19	P53	I/O	Port 5	41	P16	I/O	
20	P52	I/O		42	P15	I/O	
21	P51/TO2	I/O	Port 5/16-bit timer output	43	P14	I/O	
22	P50/TI0/TO0	I/O	Port 5/External count clock input to 8-bit timer/8-bit timer output	44	P13	I/O	

● **HD6437042AH05FV** (X7205100) **CPU**

DM: IC009

PIN NO.	NAME	I/O	FUNCTION	PIN NO.	NAME	I/O	FUNCTION
1	TIOC4/DACK0/PE14	I/O	MTU I/O / DMA acknowledge / Port E	57	D11	I/O	Data bus
2	PE15	O	Port E	58	D10	I/O	
3	VSS	I	Ground	59	D9	I/O	
4	A0	O	Address bus	60	D8	I/O	
5	A1	O		61	VSS	I	Ground
6	A2	O		62	D7	I/O	Data bus
7	A3	O		63	D6	I/O	
8	A4	O		64	D5	I/O	
9	A5	O		65	VCC	I	Power supply +5 V
10	A6	O		66	D4	I/O	Data bus
11	A7	O		67	D3	I/O	
12	A8	O		68	D2	I/O	
13	A9	O		69	D1	I/O	
14	A10	O		70	D0	I/O	
15	A11	O		71	VSS	I	Ground
16	A12	O		72	XTAL	I	Crystal oscillator
17	A13	O		73	MD3	I	Mode control
18	A14	O		74	EXTAL	I	Crystal oscillator
19	A15	O		75	MD2	I	Mode control
20	A16	O		76	NMI	I	Non-maskable interrupt request
21	VCC	I	Power supply +5 V	77	VCC	I	Power supply +5 V
22	A17	O	Address bus	78	MD1	I	Mode control
23	VSS	I	Ground	79	MD0	I	Mode control
24	/RAS/PB2	I/O	Row address strobe / Port B	80	PLLVCC	I	PLL Power supply +5 V
25	/CASL/PB3	I/O	Column address strobe (low) / Port B	81	PLLCAP	I	PLL capacitor
26	/CASH/PB4	I/O	Column address strobe (high) / Port B	82	PLLVSS	I	PLL Ground
27	VSS	I	Ground	83	PA15 / CK	O	Port A / Clock
28	/RDWR / PB5	I/O	DRAM read / write / Port B	84	/RES	I	Power on reset
29	A18//BACK/PB6	I/O	Address bus / Bus acknowledge / Port B	85	PE0/DREQ0	I/O	Port E / DMA request
30	A19//BREQ/PB7	I/O	Address bus / Bus request / Port B	86	PE1/DRAK0	O	Port E / DMA acknowledge
31	A20/PB8	O	Address bus/ Port B	87	PE2	O	Port E
32	A21/PB9	O		88	PE3	O	
33	VSS	I	Ground	89	PE4	O	
34	/RD	O	Read	90	VSS	I	Ground
35	/WDTOVF	O	Watch dog timer overflow	91	PF0 / AN0	I	Port F / Analog input
36	/WRH/PA13	O	High write / Port A	92	PF1 / AN1	I	
37	VCC	I	Power supply +5 V	93	PF2 / AN2	I	
38	/WRL	O	Low write	94	PF3 / AN3	I	
39	VSS	I	Ground	95	PF4 / AN4	I	
40	/CS1	O	Chip select	96	PF5 / AN5	I	
41	/CS0	O	Chip select	97	AVSS	I	Analog ground
42	/IRQ3/TCLKD/PA9	I/O	Interrupt request / Timer clock/ Port A	98	PF6 / AN6	I	Port F / Analog input
43	TCLKC//IRQ2 /PA8	I/O	Timer clock / Interrupt request / Port A	99	PF7 / AN7	I	
44	/CS3	O	Chip select	100	AVCC	I	Analog power supply +5 V
45	/CS2	O	Chip select	101	VSS	I	Ground
46	/IRQ1/PA5/SCK1	I/O	Interrupt request / Port A / Serial clock	102	PE5	O	Port E
47	TXD1/PA4	O	Data transmission / Port A	103	VCC	I	Power supply +5 V
48	RXD1/PA3	I	Data reception / Port A	104	PE6	I/O	Port E
49	/IRQ0/PA2	I/O	Interrupt request / Port A	105	PE7	I/O	
50	TXD0	O	Data transmission	106	PE8	I/O	
51	RXD0	I	Data reception	107	PE9	O	
52	D15	I/O	Data bus	108	PE10	O	
53	D14	I/O		109	VSS	I	Ground
54	D13	I/O		110	PE11	O	Port E
55	VSS	I	Ground	111	PE12	O	
56	D12	I/O	Data bus	112	/MRES/PE13	I	Manual reset / Port E

● **HG73C205AFD** (XU947C00) **SWX00B** (Tone Generator)

DM: IC005, 018

PIN NO.	NAME	I/O	FUNCTION	PIN NO.	NAME	I/O	FUNCTION
1	ICN	I	Initial clear	85	CMA3	O	Program address bus
2	RFCLKI	I	PLL Clock	86	CMA8	O	Program address bus
3	TM2	I	PLL Control	87	CMA2	O	Program address bus
4	AVDD_PLL		Power supply	88	CRD	O	read signal
5	AVSS_PLL		Ground	89	CMA1	O	Program address bus
6	MODE0	I	SWX dual mode	90	CUB	O	high byte effective signal
7	VCC7		Power supply	91	VCC91		Power supply
8	GND8		Ground	92	GHND92		Ground
9	XIN	I	crystal oscillator	93	CS1	O	CS signal
10	XOUT	O	crystal oscillator	94	CMA0	O	Program address bus
11	MODE1	I	SWX separate mode	95	CLB	O	low byte effective signal
12	TEST0	I	TEST pin	96	CMA12	O	Program address bus
13	TESTON	I	TEST pin	97	CMA11	O	Program address bus
14	AN0-P40	I	A/D converter	98	CMA10	O	Program address bus
15	AN1-P41	I	A/D converter	99	CMA9	O	Program address bus
16	AN2-P42	I	A/D converter	100	GND100		Ground
17	AN3-P43	I	A/D converter	101	CWE	O	write signal
18	AVDD_AN		Power supply	102	CMA16	O	Program address bus
19	AVSS_AN		Ground	103	CMA15	O	Program address bus
20	TXD0	O	for MIDI or TO-HOST	104	CMA14	O	Program address bus
21	TXD1	O	for MIDI	105	CMA13	O	Program address bus
22	EXCLK	I	Crystal oscillator	106	CMD8	I/O	Program memory Data bus
23	SMD11	I/O	Wave memory data bus	107	CMD7	I/O	Program memory Data bus
24	SMD4	I/O	Wave memory data bus	108	CMD9	I/O	Program memory Data bus
25	SMD3	I/O	Wave memory data bus	109	CMD6	I/O	Program memory Data bus
26	SMD12	I/O	Wave memory data bus	110	CMD10	I/O	Program memory Data bus
27	SMD10	I/O	Wave memory data bus	111	CMD5	I/O	Program memory Data bus
28	SMD5	I/O	Wave memory data bus	112	CMD11	I/O	Program memory Data bus
29	SMD2	I/O	Wave memory data bus	113	CMD4	I/O	Program memory Data bus
30	SMD13	I/O	Wave memory data bus	114	CMD12	I/O	Program memory Data bus
31	SMD9	I/O	Wave memory data bus	115	CMD3	I/O	Program memory Data bus
32	SMD6	I/O	Wave memory data bus	116	CMD13	I/O	Program memory Data bus
33	SMD1	I/O	Wave memory data bus	117	CMD2	I/O	Program memory Data bus
34	SMD14	I/O	Wave memory data bus	118	CMD14	I/O	Program memory Data bus
35	VCC35		Power supply	119	VCC119		Power supply
36	GND36		Ground	120	GND115		Ground
37	SMD8	I/O	Wave memory data bus	121	CMD1	I/O	Program memory Data bus
38	SMD7	I/O	Wave memory data bus	122	CMD15	I/O	Program memory Data bus
39	SMD0	I/O	Wave memory data bus	123	CMD0	I/O	Program memory Data bus
40	SMD15	I/O	Wave memory data bus	124	CMA21	O	Program address bus
41	SOE	O	read signal	125	PDT15	I/O	SWX access data bus
42	SWE	O	write signal	126	PDT14	I/O	SWX access data bus
43	SRAS	O	RAS signal	127	PDT13	I/O	SWX access data bus
44	SCAS	O	CAS signal	128	PDT12	I/O	SWX access data bus
45	REFRESH	O	REFRESH signal	129	PDT11	I/O	SWX access data bus
46	CS0	O	CS signal	130	PDT10	I/O	SWX access data bus
47	SMA0	O	Memory address bus	131	PDT9	I/O	SWX access data bus
48	SMA16	O	Memory address bus	132	PDT8	I/O	SWX access data bus
49	VCC49		Power supply	133	VCC133		Power supply
50	GND50		Ground	134	GND134		Ground
51	SMA1	O	Memory address bus	135	PDT7	I/O	SWX access data bus
52	SMA15	O	Memory address bus	136	PDT6	I/O	SWX access data bus
53	SMA2	O	Memory address bus	137	PDT5	I/O	SWX access data bus
54	SMA14	O	Memory address bus	138	PDT4	I/O	SWX access data bus
55	SMA3	O	Memory address bus	139	PDT3	I/O	SWX access data bus
56	SMA13	O	Memory address bus	140	PDT2	I/O	SWX access data bus
57	SMA4	O	Memory address bus	141	PDT1	I/O	SWX access data bus
58	SMA12	O	Memory address bus	142	PDT0	I/O	SWX access data bus
59	SMA5	O	Memory address bus	143	VCA143		Power supply
60	GND60		Ground	144	GND144		Ground
61	VCC61		Power supply	145	PAD2	I	SWX access address bus
62	SMA11	O	Memory address bus	146	PAD1	I	SWX access address bus
63	SMA6	O	Memory address bus	147	PAD0	I	SWX access address bus
64	SMA10	O	Memory address bus	148	VCC148		Power supply
65	SMA7	O	Memory address bus	149	GND149		Ground
66	SMA9	O	Memory address bus	150	PCS	I	Chip select
67	SMA17	O	Memory address bus	151	PWR	I	write enable
68	SMA8	O	Memory address bus	152	PRD	I	read enable
69	SMA18	O	Memory address bus	153	RXD0	I	for Midi or TO-HOST
70	SMA19	O	Memory address bus	154	RXD1	I	for Midi or Key scan
71	SMA20	O	Memory address bus	155	SCLKI	I	EXT Clock
72	SMA21	O	Memory address bus	156	ADIN	I	A/D converter
73	SMA22	O	Memory address bus	157	ADLR	O	A/D converter LR clock
74	SMA23	O	Memory address bus	158	DO0	O	DAC
75	CMA20	O	Program address bus	159	DO1	O	DAC
76	CMA19	O	Program address bus	160	SYSCLK	O	1/2 clock
77	VCC77		Power supply	161	VCC161		Power supply
78	GND78	O	Ground	162	GND162		Ground
79	CMA18	O	Program address bus	163	WCLK	O	for DAC LR clock
80	CMA17	O	Program address bus	164	QCLK	O	1/12 clock
81	CMA5	O	Program address bus	165	BCLK	O	IIS-DAC clock
82	CMA6	O	Program address bus	166	SYI	I	Synch signal
83	CMA4	O	Program address bus	167	IRQ0	I	Interrupt request
84	CMA7	O	Program address bus	168	NMI	I	Interrupt request

● **MBCG46183-129** (XV833A00) **SIO4** (Gate Array)

DM: IC019

PIN NO.	NAME	I/O	FUNCTION	PIN NO.	NAME	I/O	FUNCTION
1	D5	I/O	Data Bus	25	TX31	O	Transmit Data 31
2	D6	I/O		26	RX32	I	Receive Data 32
3	D7	I/O		27	TX32	O	Transmit Data 32
4	/IRQ0	I/O	Interrupt Request Port 0	28	RX33	I	Receive Data 33
5	/IRQ1	I/O	Interrupt Request Port 1	29	TX33	I/O	Transmit Data 33
6	Vss		Ground	30	/IC	I	Initial Clear
7	/IRQ2	I/O	Interrupt Request Port 2	31	Vss		Ground
8	IRQ3	I/O	Interrupt Request Port 3	32	XI	I	Quartz Crystal Input
9	/RD	I	Read Signal Input	33	Vss		Ground
10	/WR	I	Write Signal Input	34	XO	I/O	Quartz Crystal Output
11	/CE	I	Chip Enable Input	35	A0	I	Address Bus
12	/ASTB	I	Address Strobe (Not used: to ground)	36	A1	I	
13	TESTSIO	I	Input with Pull-down Resistor (50k)	37	A2	I	
14	RX0	I	Receive Data 0	38	A3	I	
15	TX0	O	Transmit Data 0	39	A4	I	
16	RX1	I	Receive Data 1	40	A5	I	
17	TX1	O	Transmit Data 1	41	CPUCLK	I	CPU Clock
18	Vss		Ground	42	Vss		Ground
19	Vdd		Power Supply	43	Vdd		Power Supply
20	RX2	I	Receive Data 2	44	D0	I/O	Data Bus
21	TX2/BO2	O	Transmit Data 2	45	D1	I/O	
22	RX30	I	Receive Data 30	46	D2	I/O	
23	TX30	O	Transmit Data 30	47	D3	I/O	
24	TX31	I	Receive Data 31	48	D4	I/O	

● **AD1854JRSRL** (XY782A00) **DAC** (Digital to Analog Converter)

DM: IC006, 017

PIN No.	NAME	I/O	FUNCTION	PIN No.	NAME	I/O	FUNCTION
1	DGND	I	Digital Ground	15	AGND	I	Analog Ground
2	MCLK	I	Master Clock Input. Connect to an external clock source at either 256, 384 or 512 Fs.	16	OUTL-	O	Left Channel Negative line level analog output.
3	CLATCH	I	Latch input for control data. This input is rising-edge sensitive.	17	OUTL+	O	Left Channel Positive line level analog output.
4	CCLK	I	Control clock input for control data. Control input data must be valid on the rising edge of CCLK. CCLK may be continuous or gated.	18	AVDD	I	Analog Power Supply. Connect to analog 5 V supply.
				19	FILTB	O	Filter Capacitor connection, connect 10 µF capacitor to AGND.
5	CDATA	I	Serial control input, MSB first, containing 16 bits of unsigned data per channel. Used for specifying channel-specific attenuation and mute.	20	IDPM1	I	Input serial data port mode control one. With IDPM0, defines one of four serial modes.
6	384//256	I	Selects the master clock mode as either 384 times the intended sample frequency (HI) or 256 times the intended sample frequency (LO). The state of this input should be hardwired to logic HI or logic LO, or may be changed while the AD1854 is in power-down/reset. It must not be changed while the AD1854 is operational.	21	IDPM0	I	Input serial data port mode control zero. With IDPM1, defines one of four serial modes.
				22	ZEROL	O	Left Channel Zero Flag Output. This pin goes HI when Left Channel has no signal input for more than 1024 LR Clock Cycles.
7	X2MCLK	I	Selects internal clock doubler (LO) or internal clock = MCLK (HI).	23	MUTE	I	Mute. Assert HI to mute both stereo analog outputs. Deassert LO for normal operation.
8	ZEROR	O	Right Channel Zero Flag Output. This pin goes HI when Right Channel has no signal input for more than 1024 LR Clock Cycles.	24	/PD//RST	I	/Power-Down//Reset. The AD1854 is placed in a low power consumption mode when this pin is held LO. The AD1854 is reset on the rising edge of this signal. The serial control port registers are reset to the default values. Connect HI for normal operation.
9	DEEMP	I	De-Emphasis. Digital de-emphasis is enabled when this input signal is HI. This is used to impose a 50 µs/15 µs response characteristic on the output audio spectrum at an assumed 44.1 kHz sample rate.	25	L//RCLK	I	Left//Right clock input for input data. Must run continuously.
10	96//48	I	Selects 48 kHz (LO) or 96 kHz Sample Frequency Control.	26	BCLK	I	Bit clock input for input data. Need not run continuously; may be gated or used in a burst fashion.
11	AGND	I	Analog Ground				
12	OUTR+	O	Right Channel Positive line level analog output.				
13	OUTR-	O	Right Channel Negative line level analog output.	27	SDATA	I	Serial input, MSB first, containing two channels of 16, 18, 20, and 24 bits of twos complement data per channel.
14	FILTR	O	Voltage Reference Filter Capacitor Connection. Bypass and decouple the voltage reference with parallel 10 µF and 0.1 µF capacitors to the AGND.	28	DVDD	I	Digital Power Supply Connect to digital 5 V supply.

IC BLOCK DIAGRAM

- **SN74LVC08ANSR** (X4500A00)
  DM: IC027
- **HD74HC08FPEL-E** (XL093A00)
- **SN74HC08NSR** (XW893A00)
  DM: IC016
  Quad 2 Input AND

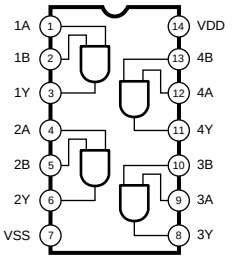

- **SN74LVC32APWR** (X5405A00)
  DM: IC028
  Quad 2 Input OR

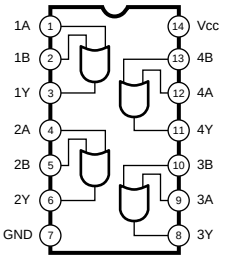

- **TC74HC138AF (EL,F)** (XW762A00)
- **SN74HC138NSR** (XW793A00)
- **MM74HC138SJX NL** (XY353A00)
  DM: IC015
  3 to 8 Demultiplexer

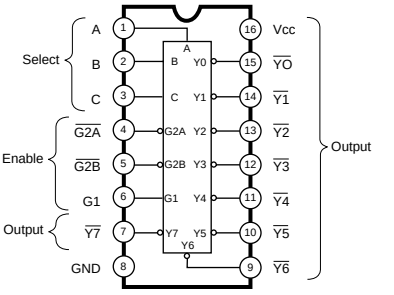

- **TC74HCT244AF (EL,F)** (XU862A00)
  PN1: IC002
  Octal 3-State Bus Buffer

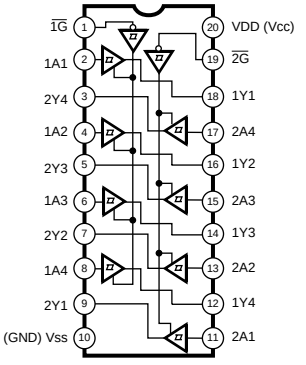

- **SN74LVC245ANSR** (X7206A00)
  DM: IC024-026
  Octal 3-State Bus Transceiver

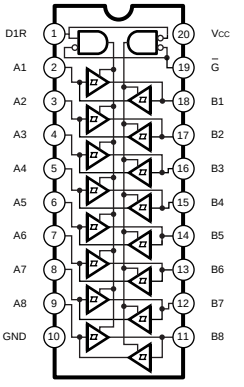

- **BU4053BC** (XS086A00)
  AM: IC014, 015
  Triple 2-Channel
  Multiplexer/Demultiplexer

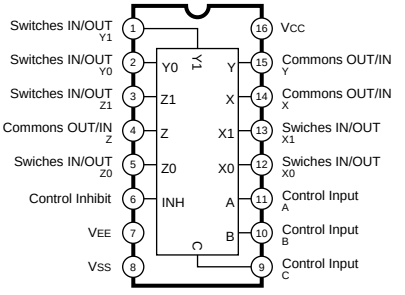

- **BU4066BC** (XU834A00)
  AM: IC009
  Quad Bilateral Analog Switch

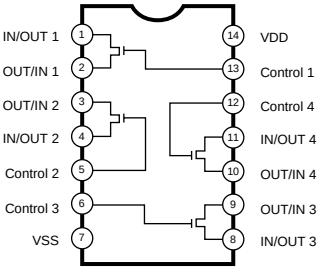

- **M5243AP09** (XY513A00)
  AM: IC007, 008
  Graphic Equalizer

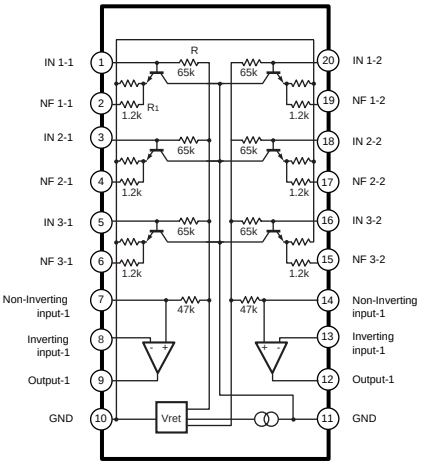

- **μPC4570G2-E1-A** (X7351A00)
  DM: IC010, 012, 020
  Dual Operational Amplifier

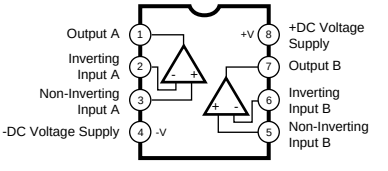

- **µPC4570HA-A** (XB247A00)
  AM: IC001-004, 010-013
  Dual Operational Amplifier

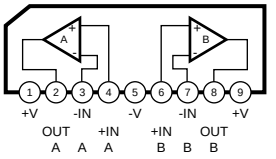

- **SN74AHC1G00DCKR** (X4135A00)
  DM: IC029
  Single 2-Input Positive-NAND Gate

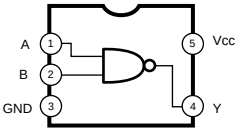

FUNCTION TABLE

INPUTS		OUTPUT
A	B	Y
H	H	L
L	X	H
X	L	H

- **LA4705NA** (XQ619A00)
  AM: IC018
  Power Amplifier

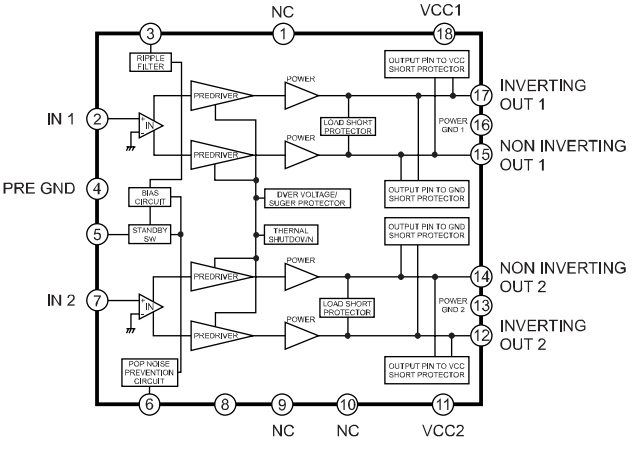

CIRCUIT BOARDS

AM Circuit Board (XY431C0) **20**
DM Circuit Board (X7123C0) **18/19**
HP1 Circuit Board (XY433D0) **30**
HP2 Circuit Board (XY433D0) **30**
MK-H Circuit Board (XR565C0) **29**
MK-L Circuit Board (XR564C0) **28**
MKS5F2 Circuit Board (X6711A0) **28/29**
PN1 Circuit Board (X7474A0) **22/24**
PN2 Circuit Board (X7475A0) **26/27**
PN3 Circuit Board (X7474A0) **22/25**
PN4 Circuit Board (X7475A0) **26/27**
VR1 Circuit Board (XY433D0) **30**
VR2 Circuit Board (XY433D0) **30**
VR3 Circuit Board (XY433D0) **30**

Note: See parts list for details of circuit board component parts.

• DM Circuit Board

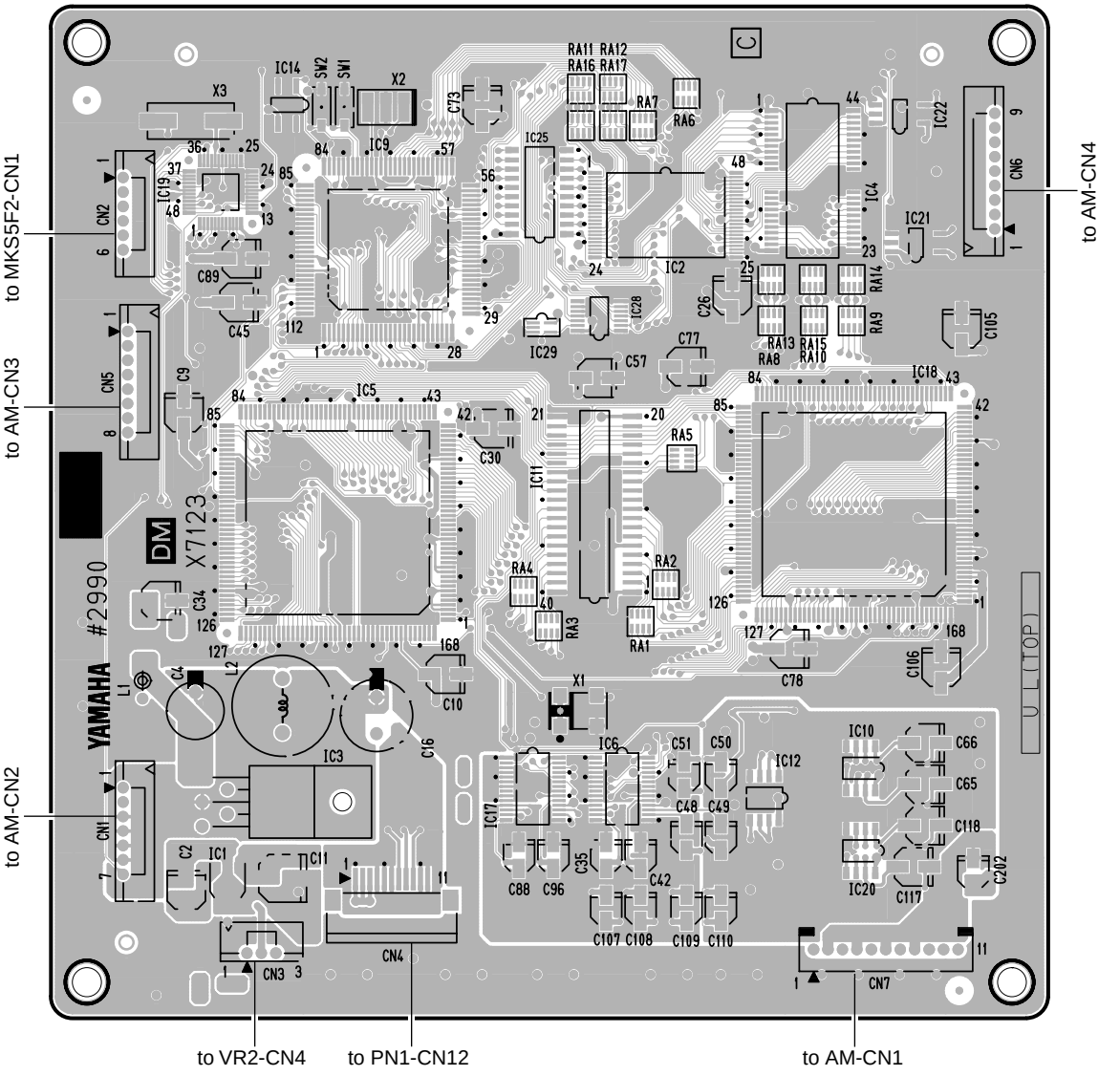

Component side

• DM Circuit Board

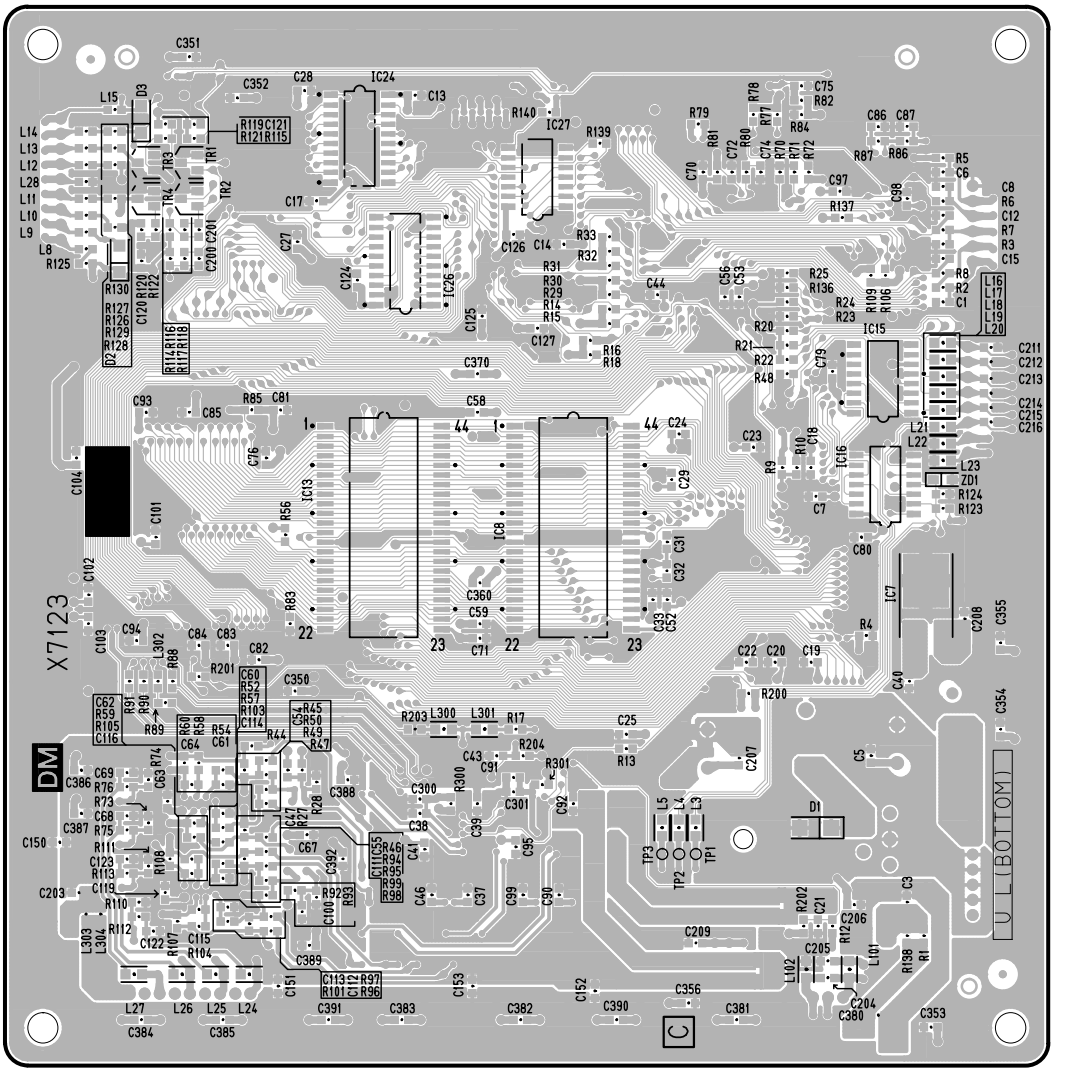

Pattern side

• AM Circuit Board

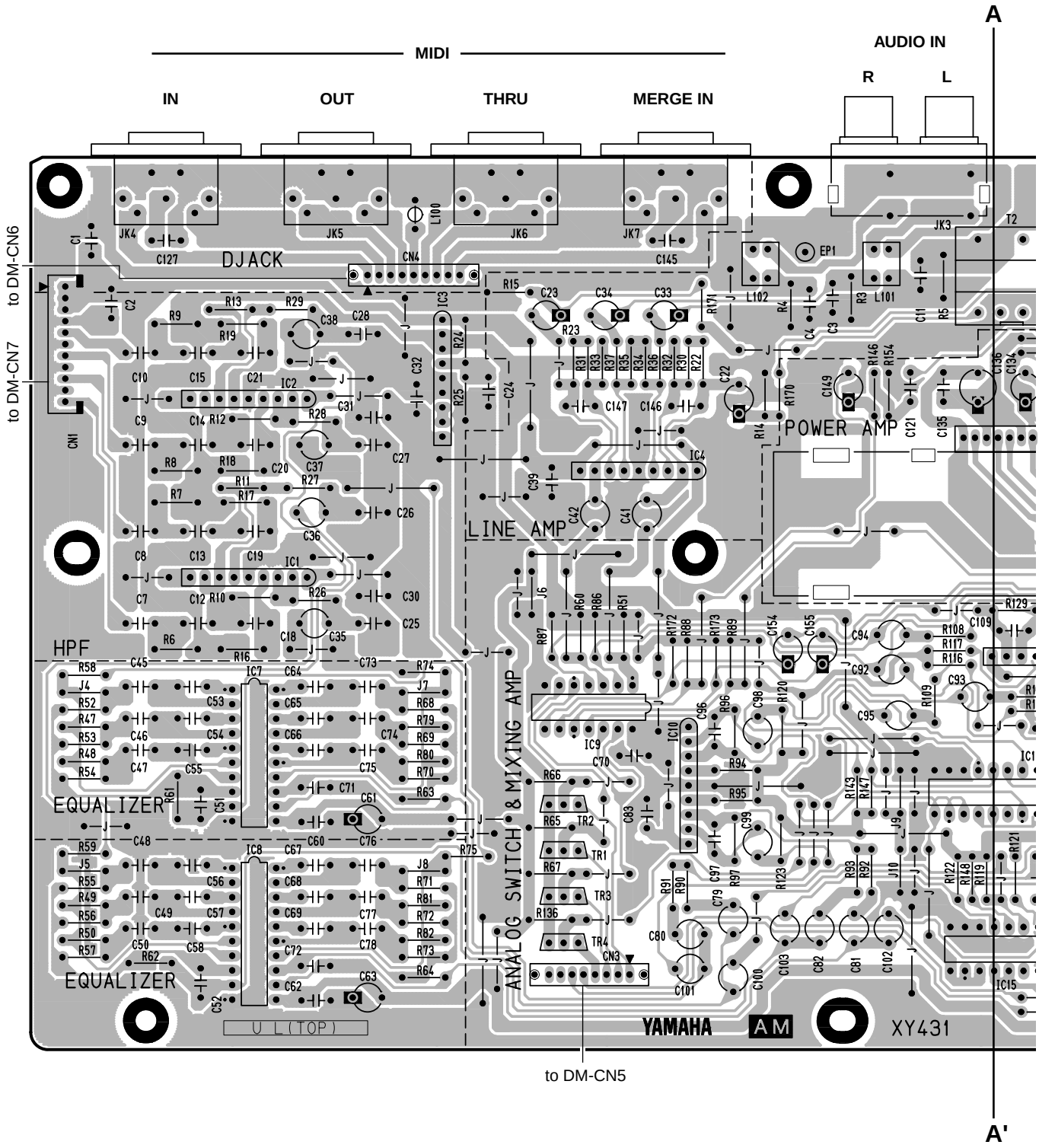

WG50390

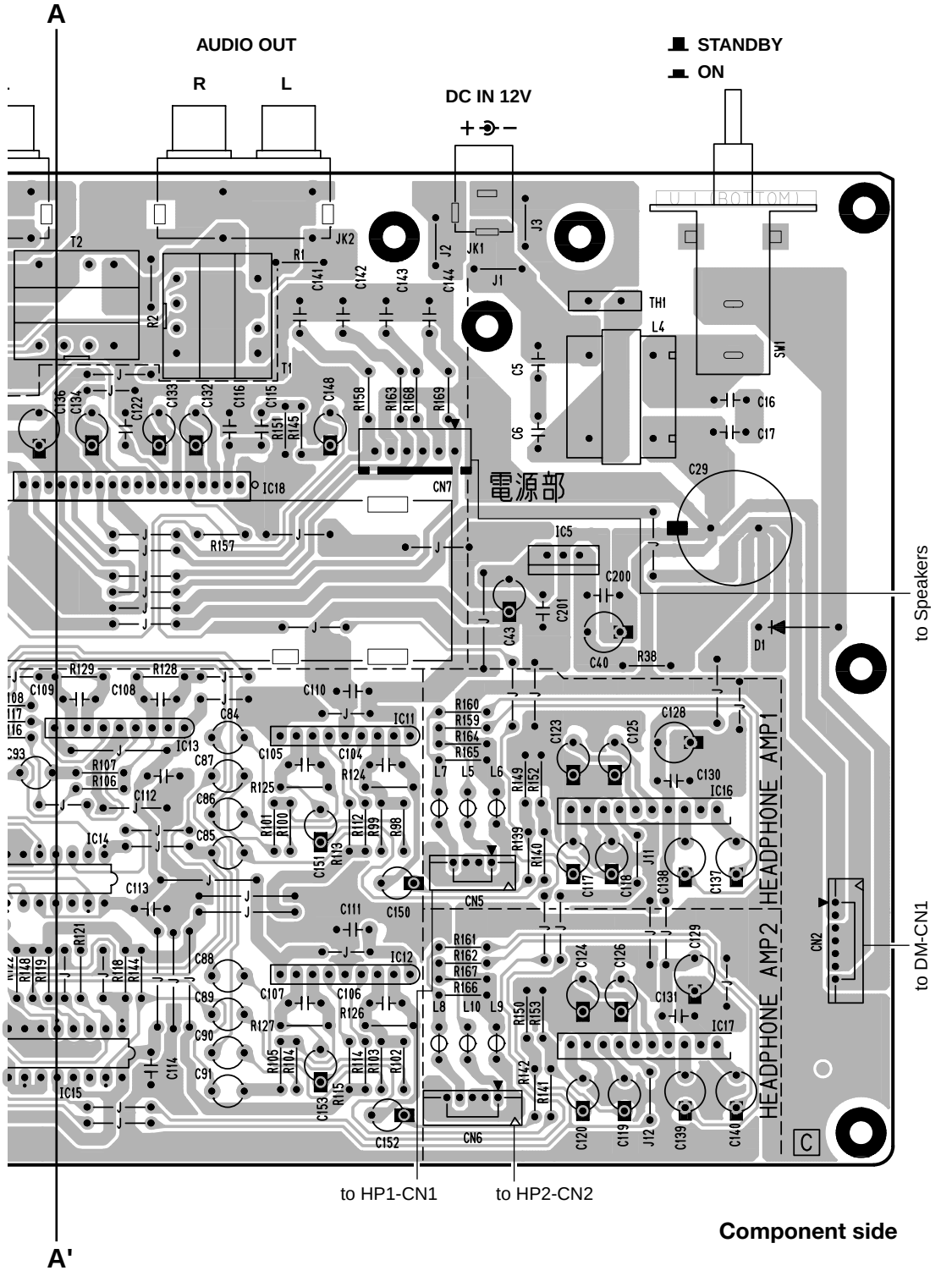
A
A'
AUDIO OUT
R
L
DC IN 12V
STANDBY
ON
電源部
HEADPHONE AMP1
HEADPHONE AMP2
to Speakers
to DM-CN1
to HP1-CN1
to HP2-CN2
Component side

• PN1 Circuit Board

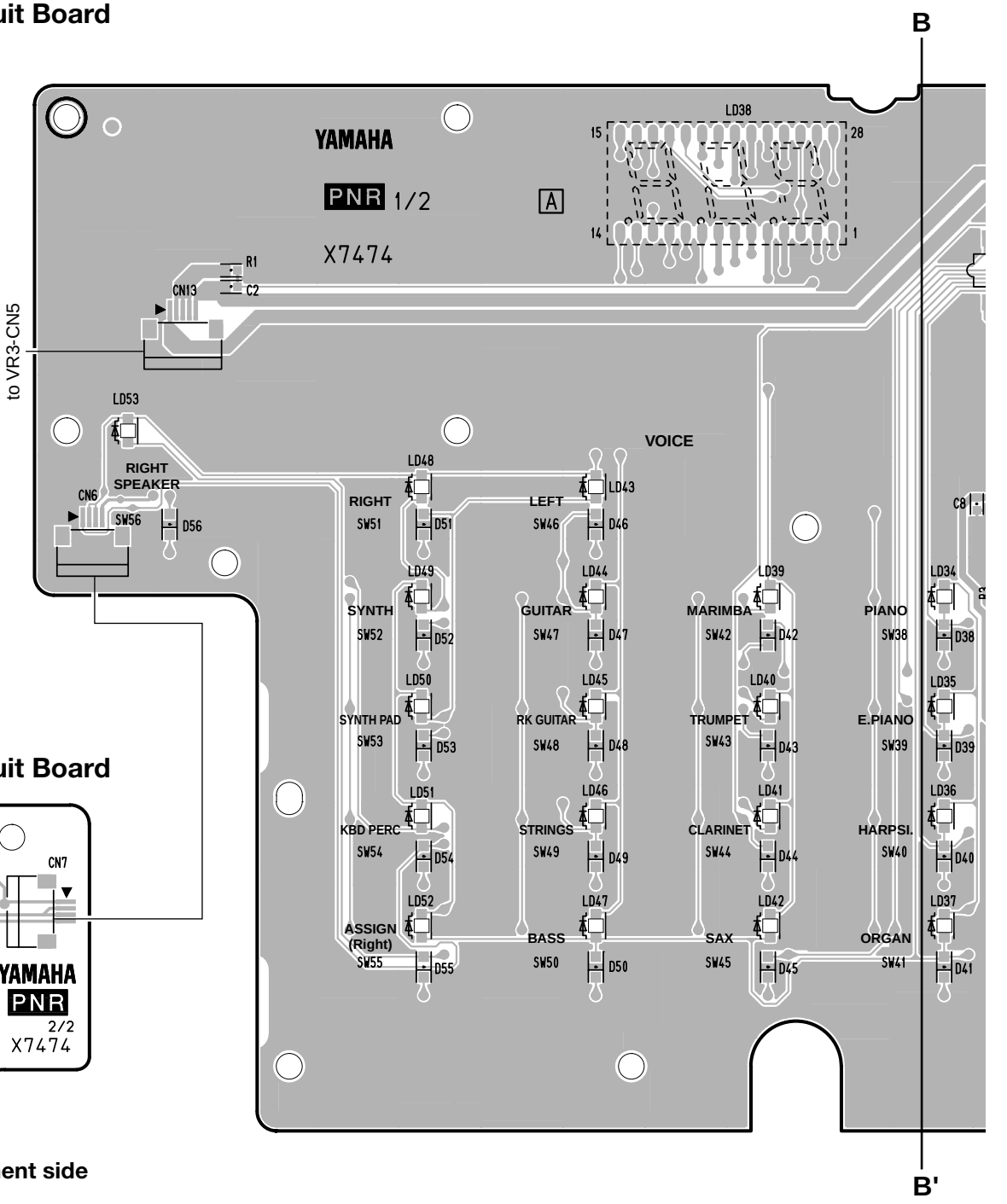

• PN3 Circuit Board

Component side

PN1: V627780
PN3: V627800

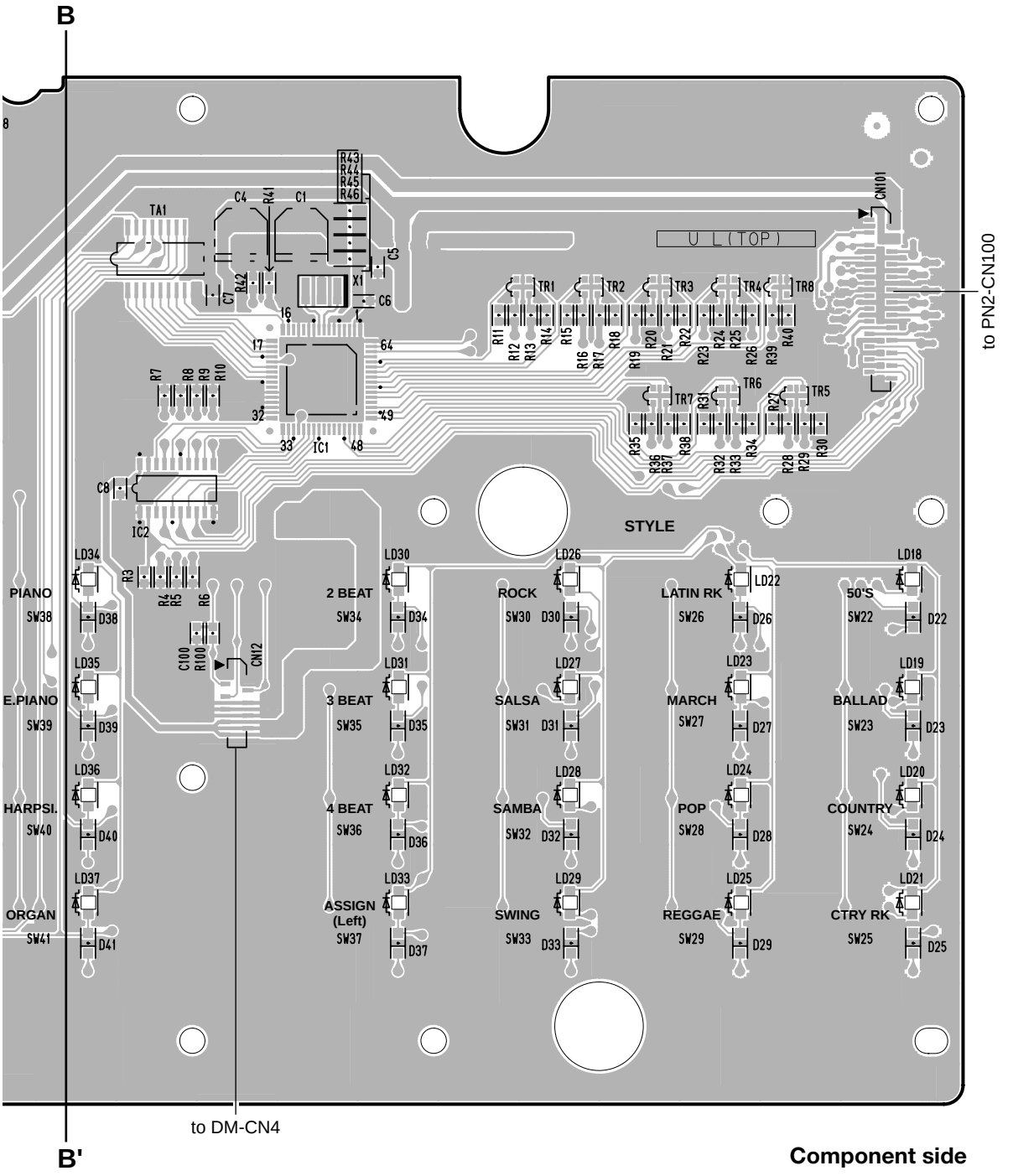

Component side

V627780

- **PN1 Circuit Board**

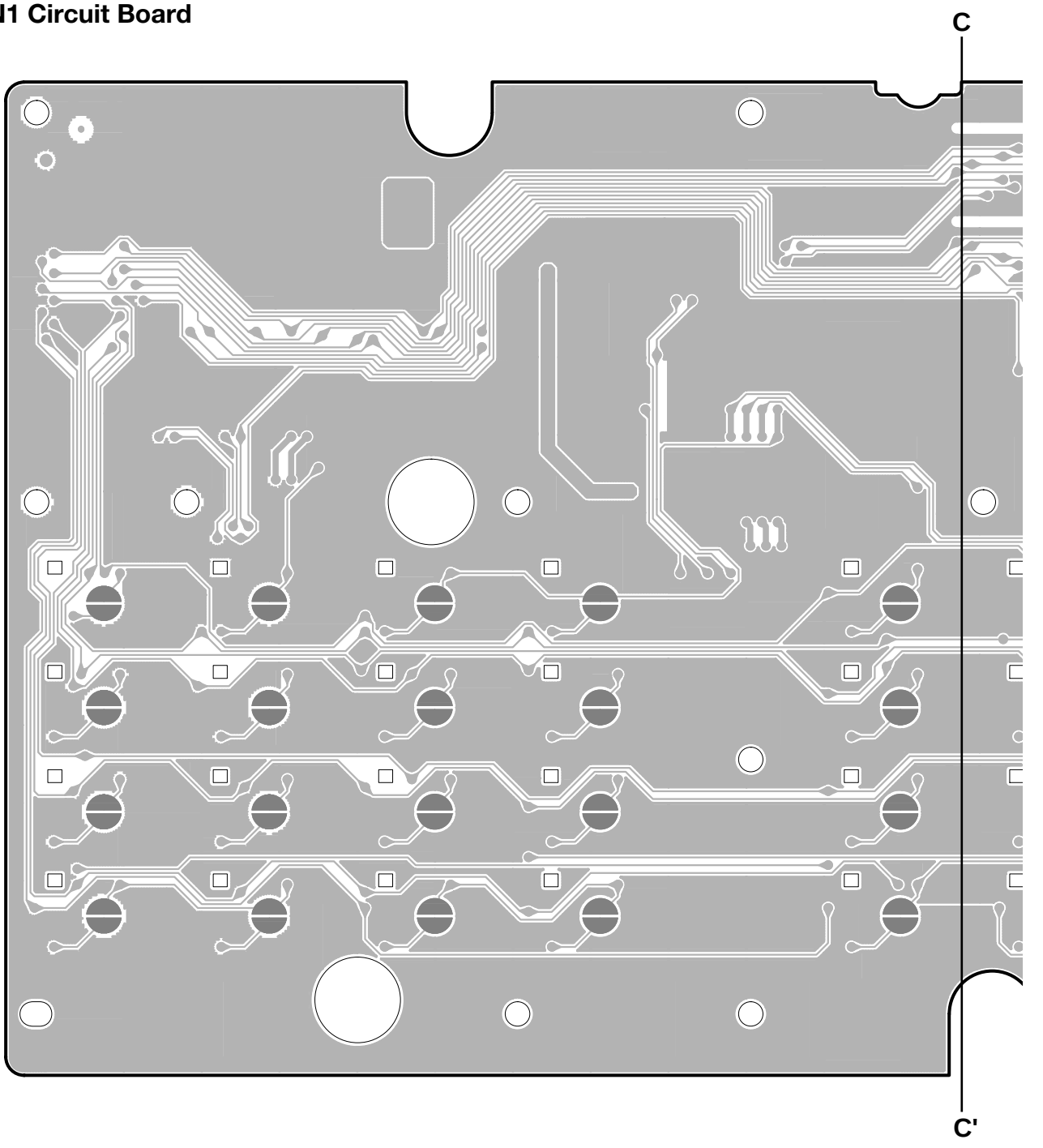

V627780

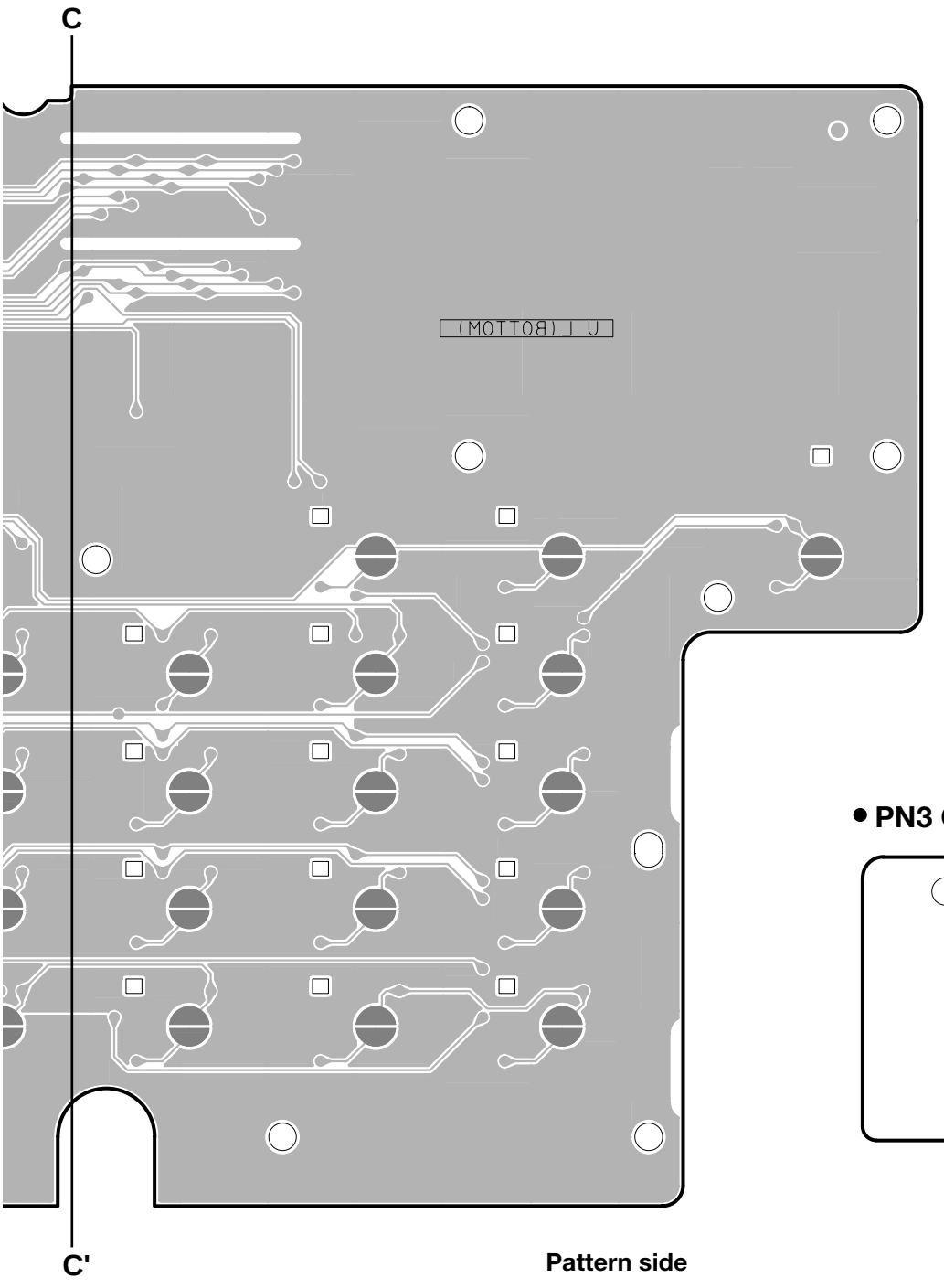

Pattern side

• PN3 Circuit Board

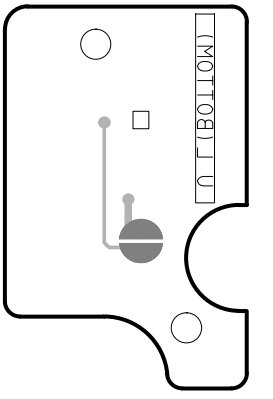

Pattern side

PN1: V627780
PN3: V627800

• PN2 Circuit Board

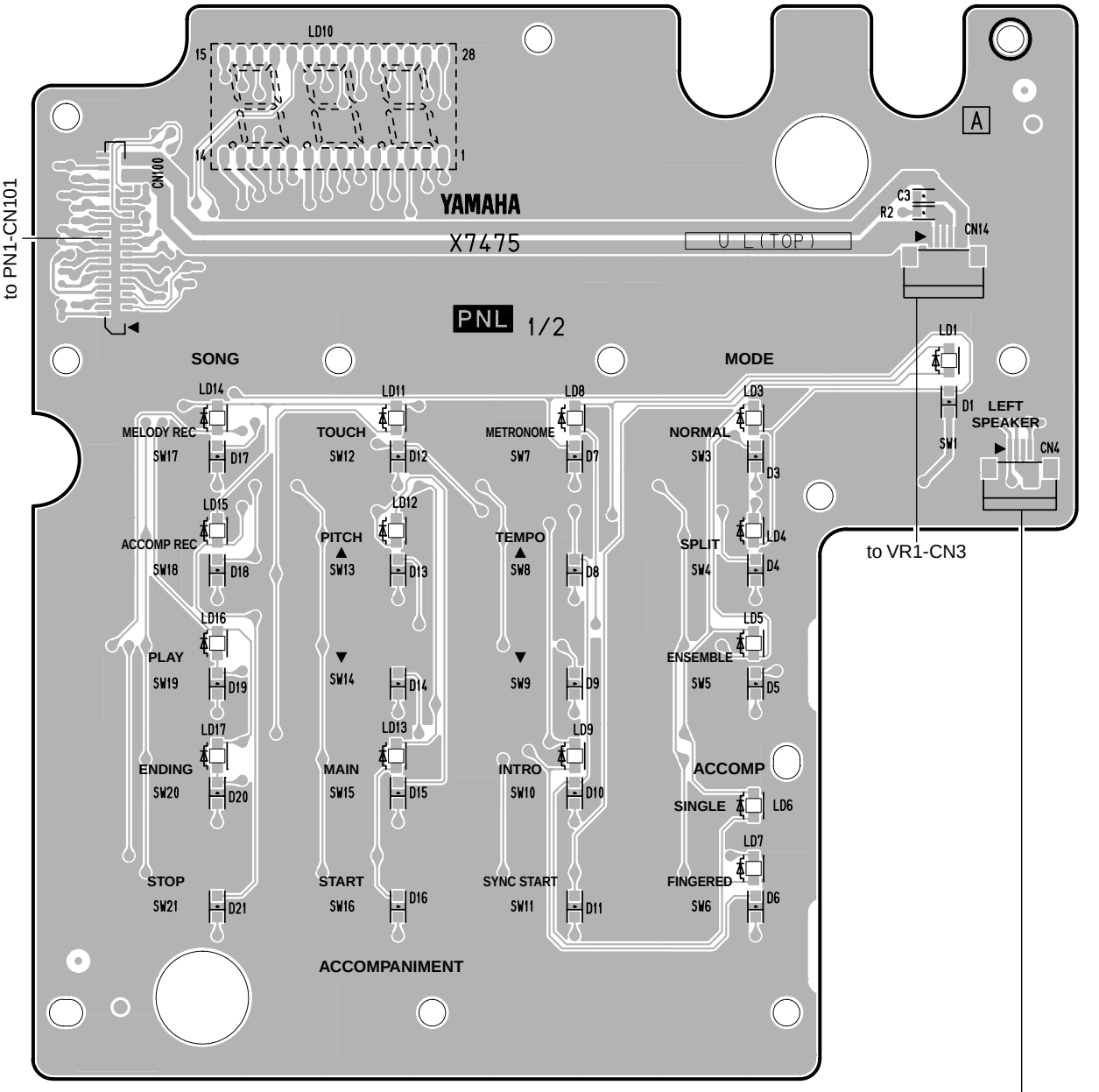

Component side

• PN4 Circuit Board

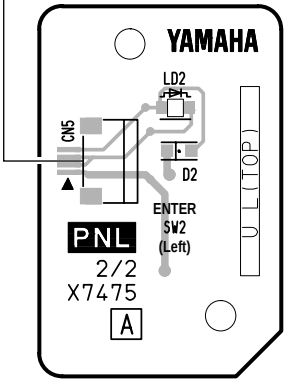

Component side

PN2: V627790
PN4: V627810

• PN2 Circuit Board

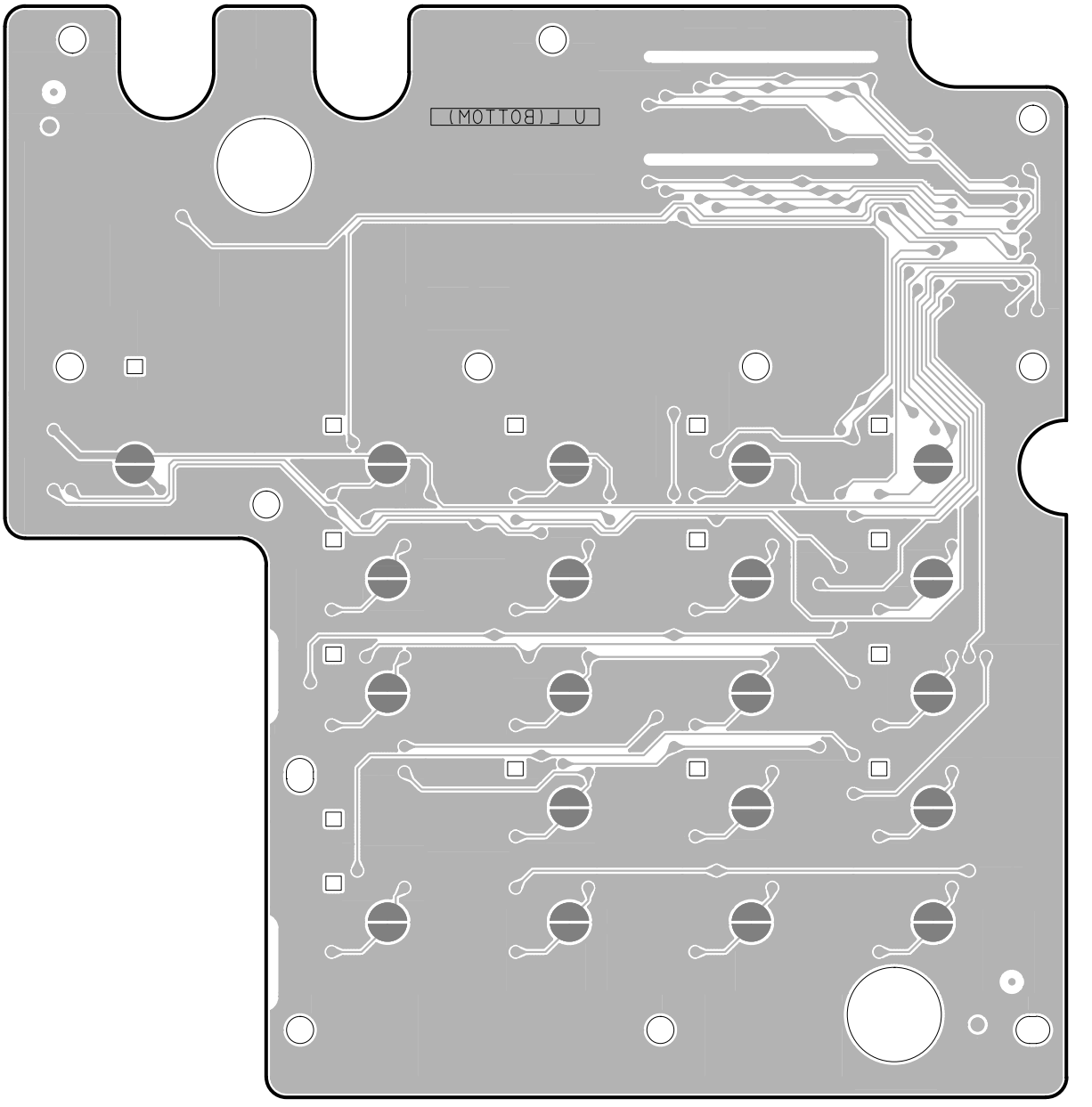

Pattern side

• PN4 Circuit Board

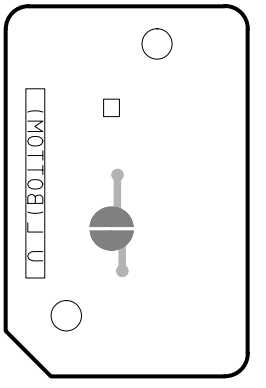

Pattern side

PN2: V627790
PN4: V627810

• MK-L Circuit Board

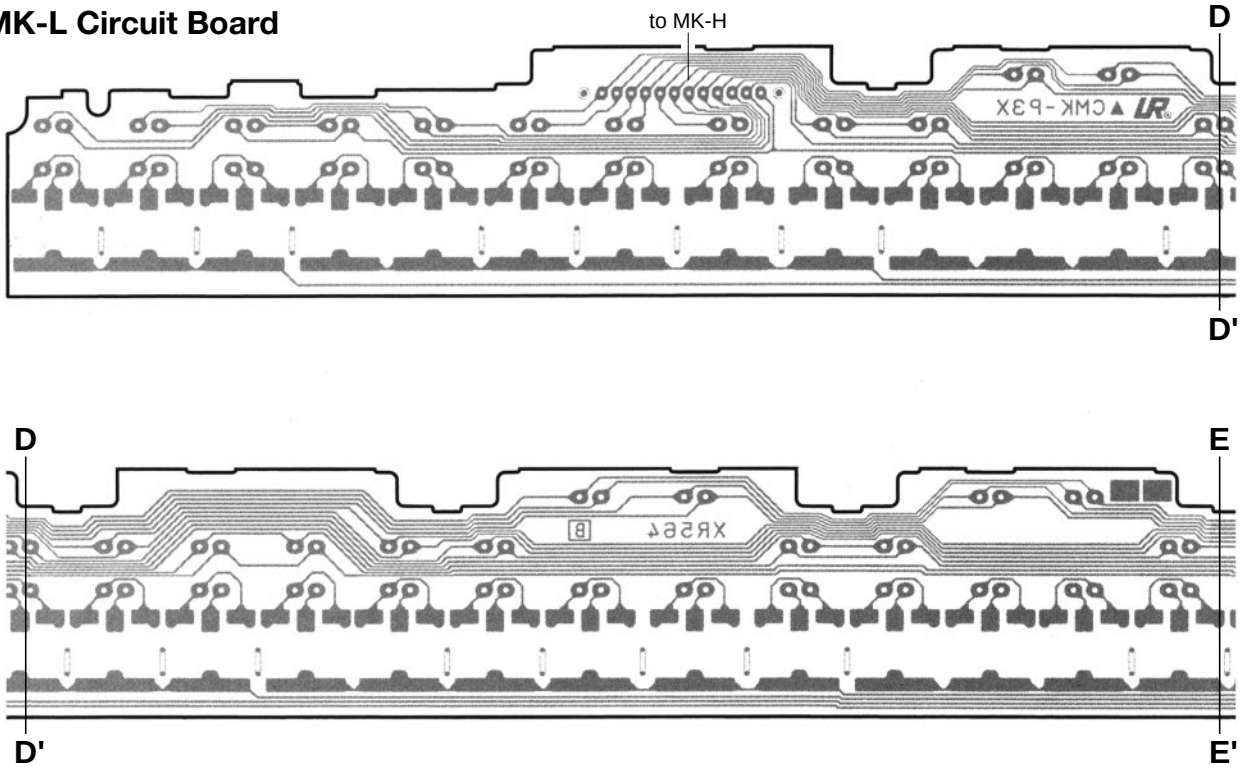

• MKS5F2 Circuit Board

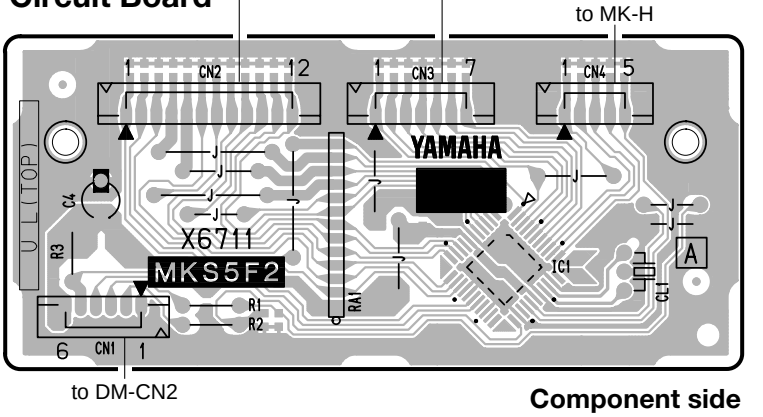

MK-L: 2NA-VV58380
MKS5F2: WF55470

• MK-H Circuit Board

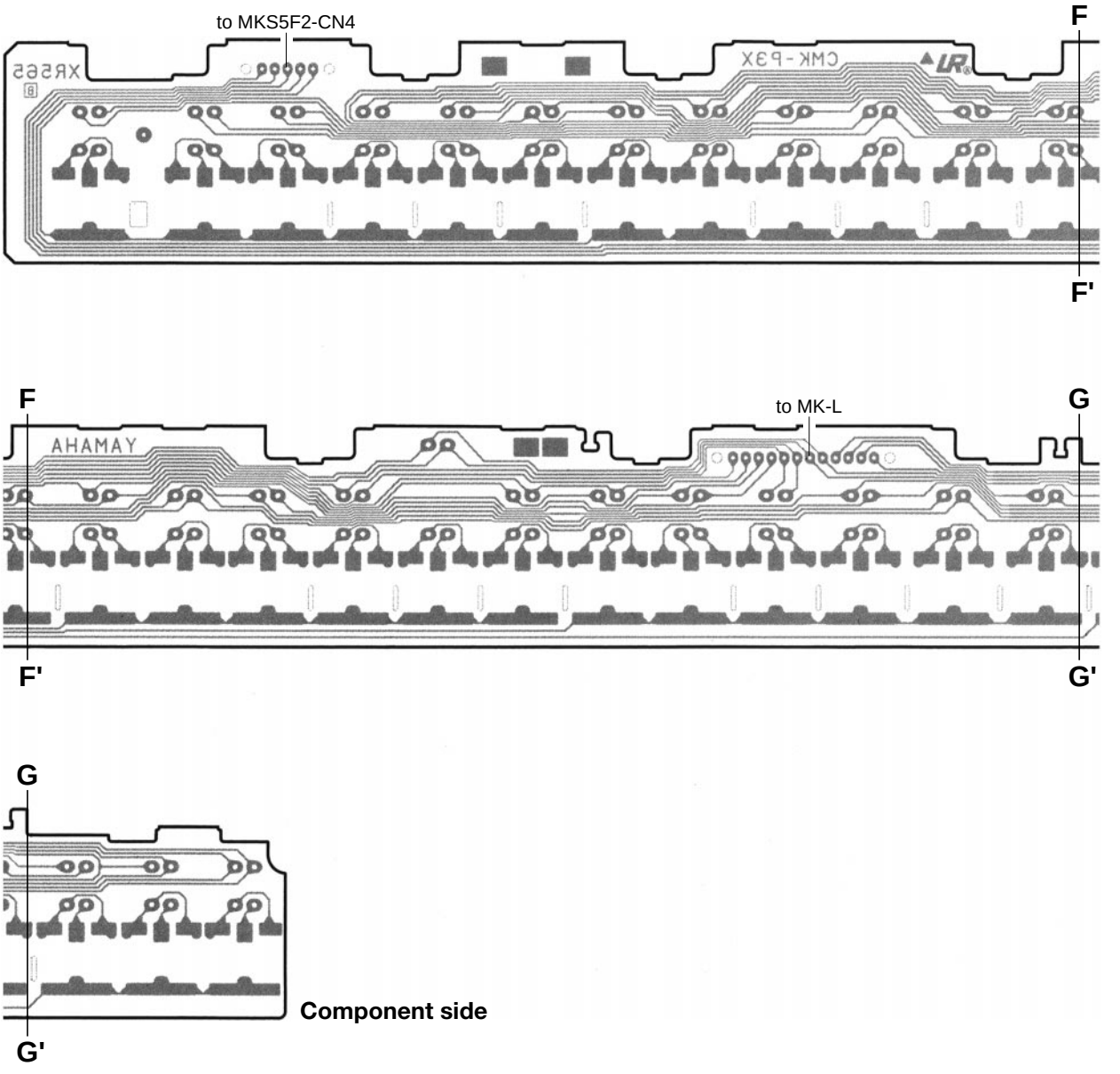

Component side

• MKS5F2 Circuit Board

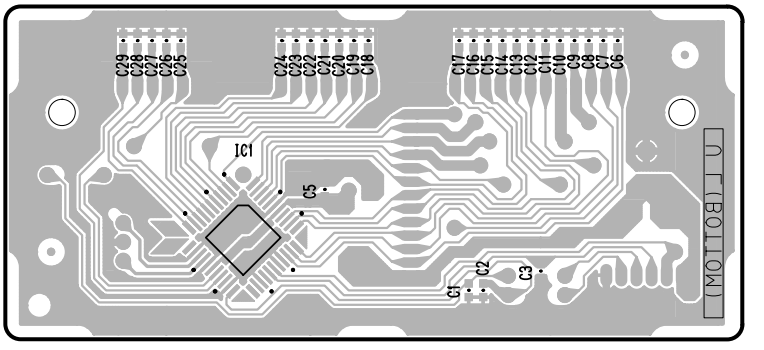

Pattern side

MK-H: 2NA-VV583900
MKS5F2: WF55470

• HP1 Circuit Board

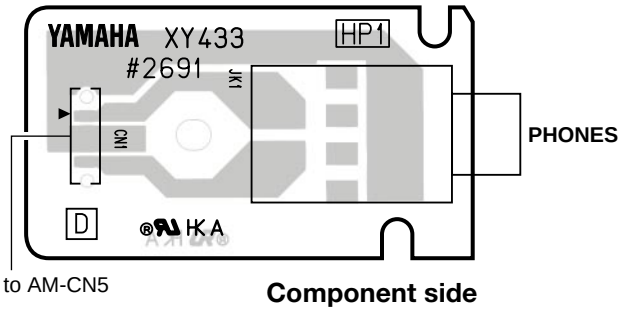

• HP2 Circuit Board

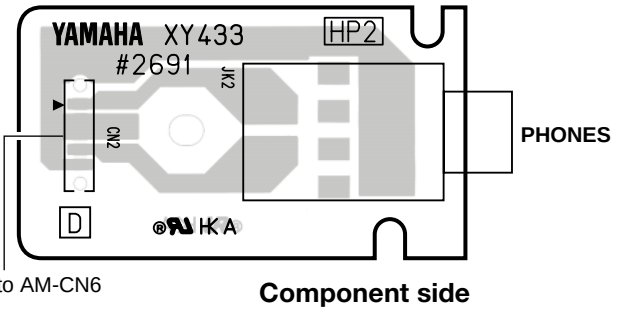

• VR1 Circuit Board

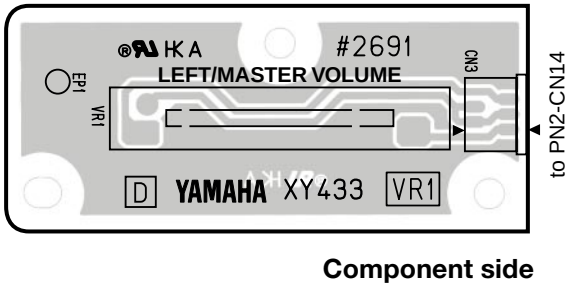

• VR2 Circuit Board

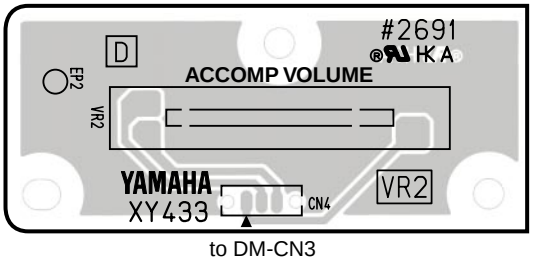

• VR3 Circuit Board

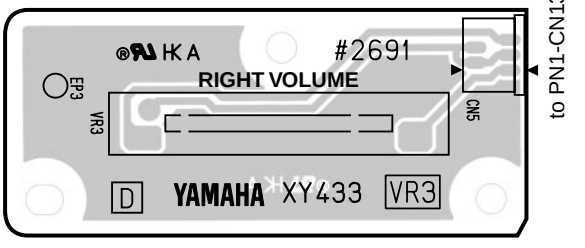

HP1: V542670
HP2: V545980
VR1: V542640
VR2: V542650
VR3: V542660

TEST PROGRAM

1. Preparation

1) Use PA-3B (AC adaptor). (PA-32 or PA-3 can also be used.)
2) Select the position for ordinary use if there is no specification for a change in the volume.
3) Measuring device: Frequency counter, which can detect thousandth digit, Level meter (with JIS-C filter)
   Note: Connect a load resistor of 33Ω to the terminal [PHONES]. Input impedance of the measuring device should be 1MΩ or more.
4) Jig: MIDI cable

2 Start-up the Test Program

Holding down the keys [C#2], [F2], [G#2] simultaneously, press the [STANDBY/ON] switch.

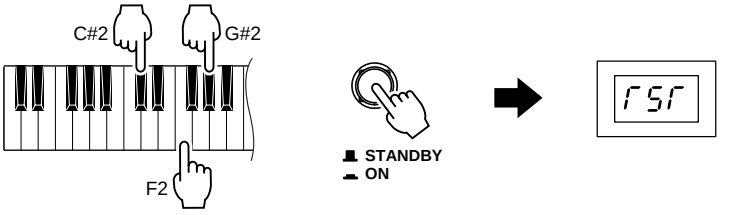

3 Test Procedure

When the test program is started, "rSr" will be displayed on the 7-segment LED (left).
Select a test program item to be executed by pressing the [TEMPO ▲] / [TEMPO ▼] buttons and perform the test using the [START] button. After the test result is shown, press the [START] button again and "888" will be shown on the 7-segment LED (right). This means that the test selected in the test program is finished. Then, a new test program item can be selected.
When the test result is successful, "PAS" will be displayed on the 7-segment LED (right).
When the test result is unsuccessful, "Err" will be displayed on the 7-segment LED (right). Press the lowest key (white key C1) on the keyboard and a new test program item can be selected.

4 Test program list

Test No.	LED display		Test descriptions, judging conditions, etc.
1	r01	VER ⇨ *** or Err	Displays version of the ROM. Displays versions of the ROM (Program, Wave) alternately. When the test result is successful, "PrG" will be displayed on the 7-segment LED (left) and the version (***) will be displayed on the 7-segment LED (right) for Program, and "Wav" will be displayed on the 7-segment LED (left) and the version (***) will be displayed on the 7-segment LED (right) for Wave.
2	r02	ROM ⇨ PAS or Err	ROM Check 1 Checks the ROM connected to the CPU bus. (simplified check) The test result is displayed on the 7-segment LED (right).
3	r03	RAM ⇨ PAS or Err	RAM Check 1 Checks the RAM connected to the CPU bus. (simplified check) The test result is displayed on the 7-segment LED (right).
4	r04	W-R ⇨ PAS or Err	Wave ROM Check 1 Checks the Wave ROM. (simplified check) The test result is displayed on the 7-segment LED (right).
9	r09	EFF	Effect 1 (REVERB) RAM Check Checks the Effect 1 (REVERB) RAM. Produces a sound (C3 sine wave) at send level MAX and dry level MIN. Check that there is no abnormal sounds or noise. Sound production stops when returning to the selection screen with the [START] button.
11	r11	rG1	Sound Source 1 Check (Auto-Scaling) Plays each key automatically in the order of scale (auto-scaling). 32 sine-wave sounds from C2 to G4 are produced. Check that there is no abnormal sounds or noise. When the auto-scaling is finished, sound production will stop.
12	r12	rG2	Sound Source 2 Check (Auto-Scaling) Plays each key automatically in the order of scale (auto-scaling). 32 sine-wave sounds from C2 to G4 are produced. Check that there is no abnormal sounds or noise. When the auto-scaling is finished, sound production will stop.

Test No.	LED display		Test descriptions, judging conditions, etc.
13	r 13	P .r	Pitch Check Connect the frequency counter to the [PHONES] jack. (33 Ω load) A sine wave of 440 Hz ± 0.22 Hz is produced at an appropriate level, PAN = Center. Check that the correct signal is output.
14	r 14	LuR	Output Level (R) Check Connect the level meter (with JIS-C filter) to the [PHONES] jack. (33 Ω load) Set the [LEFT/MASTER VOLUME] to the maximum level and check the output level. A sine wave of 1 kHz is produced is produced at an appropriate level, PAN = R (TG1). PHONES L: -65 dBu or less PHONES R: -15 dBu ± 2 dB Sound production stops when returning to the selection screen with the [START] button.
15	r 15	LuL	Output Level (L) Check Connect the level meter (with JIS-C filter) to the [PHONES] jack. (33 Ω load) Set the [LEFT/MASTER VOLUME] to the maximum level and check the output level. A sine wave of 1 kHz is produced at an appropriate level, PAN = L (TG1). PHONES L: -15 dBu ± 2 dB PHONES R: -65 dBu or less Sound production stops when returning to the selection screen with the [START] button.
19	r 19	dAC	D/A Converter Noise Check Produce the PIANO sound by pressing a key at minimum volume level, with sustain ON and PAN = Center. Check for any bit error noise. Sound production stops when returning to the selection screen with the [START] button.
20	r20	SU ⇨ S** , A** ⇨ PAS or Err	Switch/LED Check Checks panel switches and LED. Press the panel switches in order. (See the Table 1 on page 33.) Pressing a switch produces a sine-wave sound at the pitch shown in the Table 1. When a switch with LED is turned on, the LED will light up. Slide the panel slide knob from Min to Max, and then to Center. (See the Table 1 on page 33.) A sine-wave sound is produced at the pitch shown in the Table 1. The test result is displayed on the 7-segment LED (right).
21	r21	LED	Lighting up all panel LEDs Check that all the panel LEDs light up. Pressing the highest key (white key C6), alternately light between 7-segment LEDs and the rest panel LEDs (red).
37	r37	n id ⇨ PAS or Err	MIDI Check Connect between the [MIDI IN] terminal and [MIDI OUT] terminal, and between the [MIDI THRU] terminal and [MIDI MERGE IN] terminal with MIDI cables and then execute the test. C4 sine-wave sound will be produced. The test result is displayed on the 7-segment LED (right).
41	r41	ROM ⇨ PAS or Err	ROM Check 2 Checks the ROM connected to the CPU bus. (Full Address Check) The test result is displayed on the 7-segment LED (right). It will take about 3 seconds for the check.
42	r42	RAM ⇨ PAS or Err	RAM Check 2 Checks the RAM connected to the CPU bus. (Full Address Check) The test result is displayed on the 7-segment LED (right). It will take about 4 seconds for the check.
43	r43	UAO ⇨ PAS or Err	Wave ROM Check 2 Checks the Wave ROM. (Full Address Check) The test result is displayed on the 7-segment LED (right). It will take about 2 minutes for the check.
48	r48	E .r	Test Mode Exit This will leave the test program and change to the play mode.

• Table 1

Number	Switch name	LED display	Note number
1	LEFT SPEAKER	S01	C2
2	NORMAL	S02	C#2
3	METRONOME	S03	D2
4	TOUCH	S04	D#2
5	MELODY REC	S05	E2
6	SPLIT	S06	F2
7	TEMPO ▲	S07	F#2
8	PITCH ▲	S08	G2
9	ACCOMP REC	S09	G#2
10	ENSEMBLE	S10	A2
11	TEMPO ▼	S11	A#2
12	PITCH ▼	S12	B2
13	PLAY	S13	C3
14	INTRO	S14	C#3
15	MAIN	S15	D3
16	ENDING	S16	D#3
17	FINGERED	S17	E3
18	SYNC START	S18	F3
19	START	S19	F#3
20	STOP	S20	G3
21	ENTER	S21	G#3
22	50'S	S22	A3
23	LATIN RK	S23	A#3
24	ROCK	S24	B3
25	2 BEAT	S25	C4
26	BALLAD	S26	C#4
27	MARCH	S27	D4
28	SALSA	S28	D#4
29	3 BEAT	S29	E4
30	COUNTRY	S30	F4

Number	Switch name	LED display	Note number
31	POP	S31	F#4
32	SAMBA	S32	G4
33	4 BEAT	S33	G#4
34	CTRY RK	S34	A4
35	REGGAE	S35	A#4
36	SWING	S36	B4
37	ASSIGN	S37	C2
38	LEFT	S38	C#2
39	RIGHT	S39	D2
40	RIGHT SPEAKER	S40	D#2
41	PIANO	S41	E2
42	MARIMBA	S42	F2
43	GUITAR	S43	F#2
44	SYNTH	S44	G2
45	E. PIANO	S45	G#2
46	TRUMPET	S46	A2
47	RK GUITAR	S47	A#2
48	SYNTH PAD	S48	B2
49	HARPSI.	S49	C3
50	CLARINET	S50	C#3
51	STRINGS	S51	D3
52	KBD PERC	S52	D#3
53	ORGAN	S53	E3
54	SAX	S54	F3
55	BASS	S55	F#3
56	ASSIGN	S56	G3
57	ENTER	S57	G#3
58	LEFT / MASTER VOLUME	A01	A3
59	ACCOMP VOLUME	A02	A#3
60	RIGHT VOLUME	A03	B3

5 Power On Reset

Turn on power while holding down the highest tone on the keyboard.
All RAMs are initialized and brought back to the ex-factory setting.

MIDI IMPLEMENTATION CHART

YAMAHA [Portable Keyboard] Date :25-Jul-2005
Model MIE-3XG MIDI Implementation Chart Version: 1.0

Function...		Transmitted	Recognized	Remarks
Basic	Default	1	1 - 16	
Channel	Changed	1 - 16	1 - 16	
	Default	3	3	
Mode	Messages	x	x	
	Altered	**********	x	
Note		36 - 96	0 - 127	
Number	: True voice	**********	0 - 127	
Velocity	Note ON	o 9nH, v=1-127	o 9nH, v=1 - 127	
	Note OFF	x 9nH, v=0	o	
After	Key's	x	x	
Touch	Ch's	x	o	
Pitch Bend		x	o	
Control Change	0, 32	x	o	Bank Select
	1	x	o	Modulation
	7	x	o	Volume
	64	x	o	Sustain Pedal
	98,99	x	o	NRPN LSB, MSB
	100,101	x	o	RPN LSB, MSB
Prog Change	: True #	x **********	o 0 - 127	
System Exclusive		o	o	
	: Song Pos.	x	x	
Common	: Song Sel.	x	x	
	: Tune	x	x	
System	: Clock	o	o	
Real Time	: Commands	o	o	
	: All Sound Off	x	o (120)	
Aux	: Reset All Cntrls	x	o (121)	
	: Local ON/OFF	x	x	
Mes-	: All Notes OFF	x	o (123 - 125)	
sages	: Active Sense	x	o	
	: Reset	x	x	
Notes				

Mode 1 : OMNI ON , POLY Mode 2 : OMNI ON , MONO
Mode 3 : OMNI OFF, POLY Mode 4 : OMNI OFF, MONO

o : Yes
x : No

PORTATONE

MIE-3XG

PARTS LIST

CONTENTS

OVERALL ASSEMBLY 2
UPPER CASE ASSEMBLY 4
LOWER CASE WITH SPEAKER 6
KEYBOARD ASSEMBLY 8
ELECTRICAL PARTS 10-20

Notes : DESTINATION ABBREVIATIONS

A : Australian model	M : South African model
B : British model	O : Chinese model
C : Canadian model	Q : South-east Asia model
D : German model	T : Taiwan model
E : European model	U : U.S.A. model
F : French model	V : General export model (110V)
H : North European model	W: General export model (220V)
I : Indonesian model	N,X: General export model
J : Japanese model	Y : Export model
K : Korean model	

WARNING

Components having special characteristics are marked ⚠ and must be replaced with parts having specification equal to those originally installed.

- The numbers “QTY” show quantities for each unit.
- The parts with “--” in “PART NO.” are not available as spare parts.
- This mark “ } ” in the REMARKS column means these parts are interchangeable.
- The second letter of the shaded ( ) part number is O, not zero.
- The second letter of the shaded ( ) part number is I, not one.

OVERALL ASSEMBLY

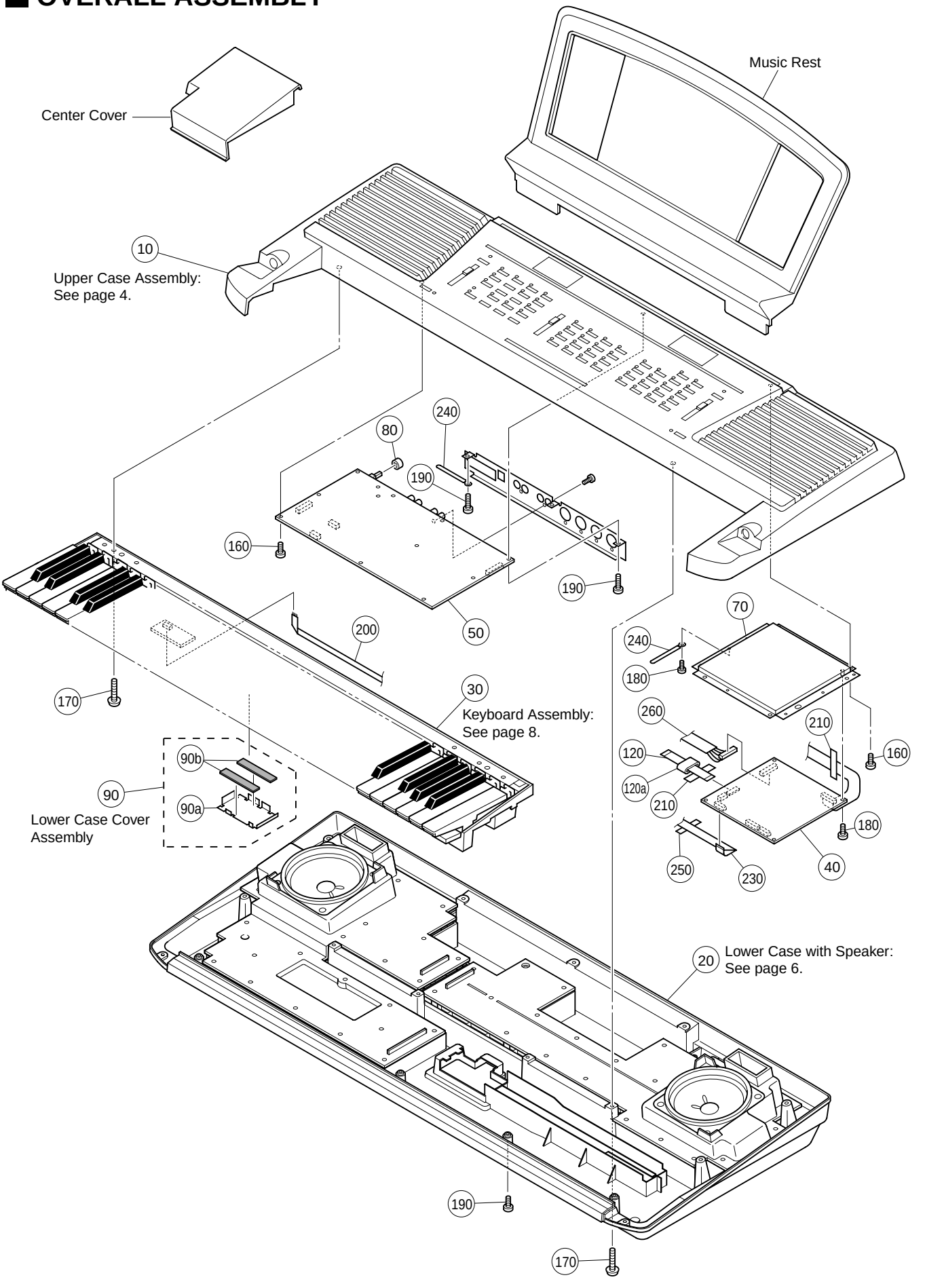

	REF NO.	PART NO.	DESCRIPTION		部品名	REMARKS	QTY	RANK
			OVERALL ASSEMBLY		総組立	MIE-3XG		
		--	Overall Assembly		総組立	(WF68190)		
*	10	WF722100	Upper Case Assembly		上ケースAss'y			
	20	--	Lower Case with Speaker		下ケースSP取付品	(WG49350)		
	30	V7632100	Keyboard Assembly	16M C61 P2M MKS5	16M鍵盤MKS5			21
*	40	WG228500	Circuit Board	DM	DMシート			
*	50	WG503900	Circuit Board	AM	AMシート			
	70	--	Shield Cover U		シールドカバーU	(V587970)		
	80	VQ218800	Push Knob Red		プッシュツマミ	STANDBY/ON		03
	90	V4415300	Lower Case Cover Assembly	SMALL	下ケース小カバーAssy			04
	90a	--	Lower Case Cover	SMALL	下ケース小カバー	(V441540)		
	90b	--	Felt	70X10X2T	フェルト	(V441550)	2	
*	120	V6273600	Connector Assembly	PN1 11P 80mm P=1.0	PN1束線Ass'y			
	120a	--	Ferrite Core	FPC-25-12	フェライトコア	(V627390)		
	160	WE774800	Bind Head Tapping Screw-P	3.0X8 MFZN2W3	Pタイト+BIND		13	01
*	170	WE995300	Bind Head Tapping Screw-P	3.0X25 MFZN2W3	Pタイト+BIND		6	
	180	WF028600	Bind Head Tapping Screw-B	3.0X6 MFZN2B3	Bタイト+BIND		5	01
*	190	WE972900	Bind Head Tapping Screw-P	3.0X12 MFZN2W3	Pタイト+BIND		17	
	200	--	Connector Assembly	KB 6P	KB束線	(V543540)		
	210	VA126100	Adhesive Tape	12X50	粘着テープ		5	03
	210	21545000	Adhesive Tape	12X50m	フィラメントテープ		5	08
	230	--	Connector Assembly	PS 7P	PS束線	(WG49900)		
	240	CB817510	Cord Binder	S-14B-E	束線止め		2	03
	250	VF298800	Adhesive Tape	19X70	粘着テープ		2	01
	260	--	Connector Assembly	AN PHR-11 L=100	AN束線	(WG49880)		
			ACCESSORIES		付属品			
		--	Music Rest		譜面立て袋入り	(WF88420)		
*	A	WH249100	Music Rest		譜面立袋入			
*	B	WG457000	Soft Cover	930X385	ソフトカバー			
*	C	WF886500	Center Cover		センターカバー袋入り			

*: New Parts

RANK: Japan only

UPPER CASE ASSEMBLY

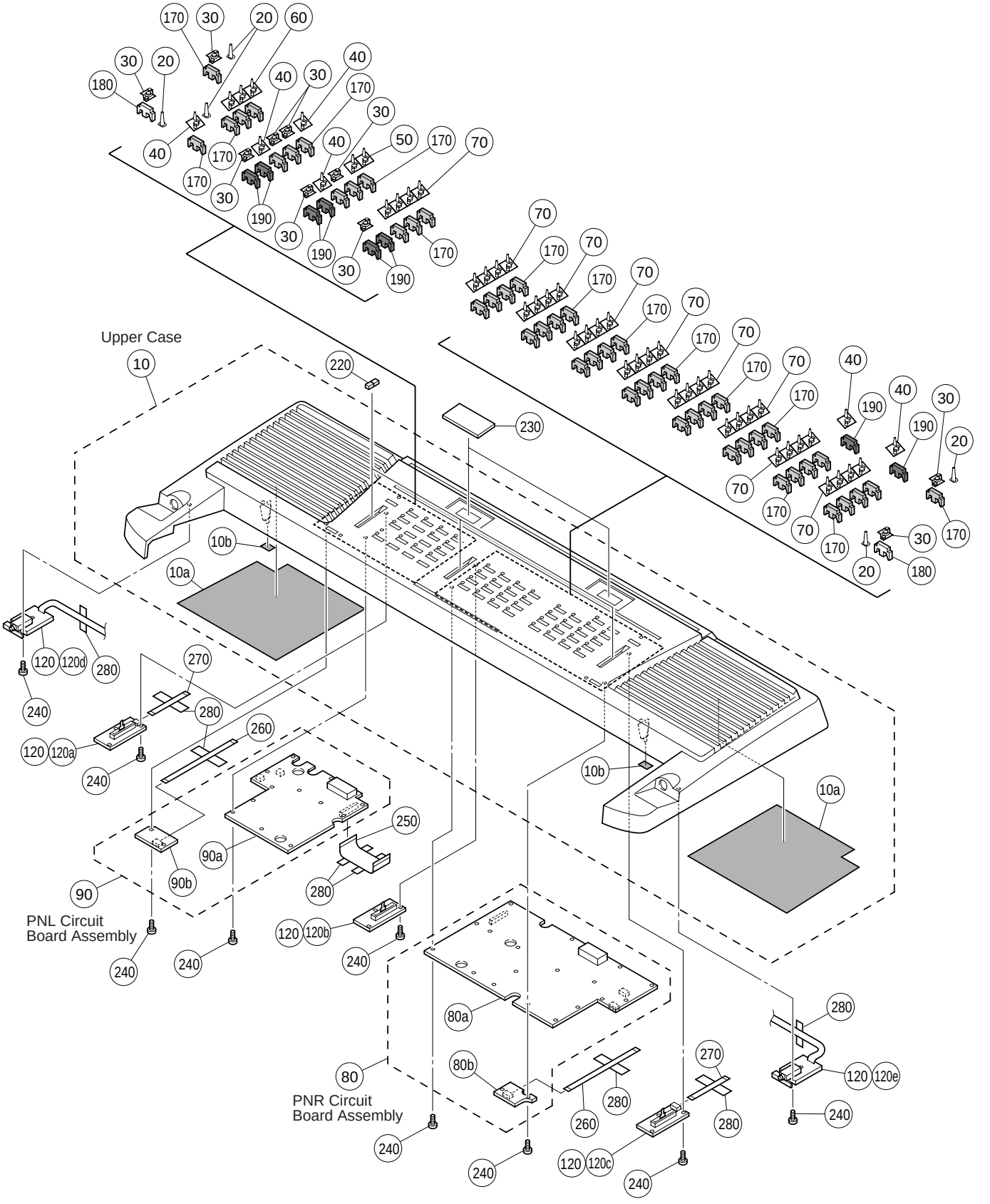

	REF NO.	PART NO.	DESCRIPTION		部品名	REMARKS	QTY	RANK
			UPPER CASE ASSEMBLY		上ケースAss'y	MIE-3XG		
*		WF722100	Upper Case Assembly		上ケースAss'y			
	10	--	Upper Case		上ケース加工品	(WF71300)		
	10a	--	Speaker Cloth		スピーカークロス	(V551270)	2	
	10b	--	Vibration-proof Tape		防振テープE	(VT70320)	2	01
	20	VJ019100	Lens		レンズ	LEFT SPEAKER,SINGLE, ENTER,RIGHT SPEAKER	5	01
	30	VH198300	Rubber Contact	x1	接点ラバー（１連）	LEFT SPEAKER,ENTER,TEMPO▲▼, SYNC START,PITCH▼,START, STOP,RIGHT SPEAKER	10	01
	40	VJ018900	Rubber Contact	E-1 with Lens	接点ラバーE－1	FINGERED,METRONOME,INTRO, MAIN,LEFT,RIGHT	6	01
	50	VH349400	Rubber Contact	E-2 1-LENSED	接点ラバーE－2	TOUCH,PITCH▲		01
	60	VH349500	Rubber Contact	E-3 LENSED	接点ラバーE－3	NORMAL,SPLIT,ENSEMBLE		01
	70	VH349600	Rubber Contact	E-4 LENSED	接点ラバーE－4	MELODY REC,ACCOMP REC,	9	02
						PLAY,ENDING,50'S,BALLAD, COUNTRY,CTRY RK,LATIN RK, MARCH,POP,REGGAE,ROCK, SALSA,SAMBA,SWING,2 BEAT, 3 BEAT,4 BEAT,ASSIGN		
						(STYLE),PIANO,E.PIANO, HARPSI.,ORGAN,MARIMBA, TRUMPET,CLARINET,SAX, GUITAR,RK GUITAR,STRINGS, BASS,SYNTH,SYNTH PAD,		
						KBD PERC,ASSIGN (VOICE)		
	80	V6277600	Circuit Board Assembly	PNR (PN1,PN3)	PNRシート集成			17
	80a	--	Circuit Board	PN1	PN1シート	(V627780)		
	80b	--	Circuit Board	PN3	PN3シート	(V627800)		
	90	V6277700	Circuit Board Assembly	PNL (PN2,PN4)	PNLシート集成			11
	90a	--	Circuit Board	PN2	PN2シート	(V627790)		
	90b	--	Circuit Board	PN4	PN4シート	(V627810)		
	120	V5425800	Circuit Board Assembly	JACK (HP1,2,VR1-3)	JACKシート集成			09
	120a	--	Circuit Board	VR1	VR1シート	(V542640)		
	120b	--	Circuit Board	VR2	VR2シート	(V542650)		
	120c	--	Circuit Board	VR3	VR3シート	(V542660)		
	120d	--	Circuit Board	HP1	HP1シート	(V542670)		
	120e	--	Circuit Board	HP2	HP2シート	(V542680)		
	170	VJ062300	Push Knob M.Gray	S x1	プッシュツマミS	LEFT SPEAKER,NORMAL,SPLIT, ENSEMBLE,FINGERED,TEMPO▲▼,	47	01
						METRONOME,TOUCH,PITCH▲▼, MELODY REC,ACCOMP REC, PLAY,50'S,BALLAD,COUNTRY, CTRY RK,LATIN RK,MARCH, POP,REGGAE,ROCK,SALSA,		
						SAMBA,SWING,2 BEAT,3 BEAT, 4 BEAT,ASSIGN (STYLE), PIANO,E.PIANO,HARPSI., ORGAN,MARIMBA,TRUMPET, CLARINET,SAX,GUITAR,RK		
						GUITAR,STRINGS,BASS,SYNTH, SYNTH PAD,KBD PERC,ASSIGN (VOICE),RIGHT SPEAKER		
*	180	WF714300	Push Knob White	S x1	プッシュツマミS	ENTER	2	
*	190	WF721000	Push Knob Black	S x1	プッシュツマミS	INTRO,SYNC START,MAIN,	8	
						START,ENDING,STOP,LEFT, RIGHT		
	220	VE037600	Slide Knob Black		スライドツマミ	LEFT/MASTER VOLUME,ACCOMP VOLUME,RIGHT VOLUME	3	02
*	230	WF722800	LED Cover		LEDカバー		2	
	240	WE774800	Bind Head Tapping Screw-P	3.0X8 MFZN2W3	Pタイト＋BIND		49	01
	250	--	Connector Assembly	PN2 26P	PN2束線	(V625840)		
	260	--	Connector Assembly	PN3 4P	PN3束線	(V543410)	2	
	270	--	Connector Assembly	PN4 5P	PN4束線	(V543420)	2	
	280	VA126100	Adhesive Tape	12X50	粘着テープ		11	03

※: New Parts

RANK: Japan only

LOWER CASE WITH SPEAKER

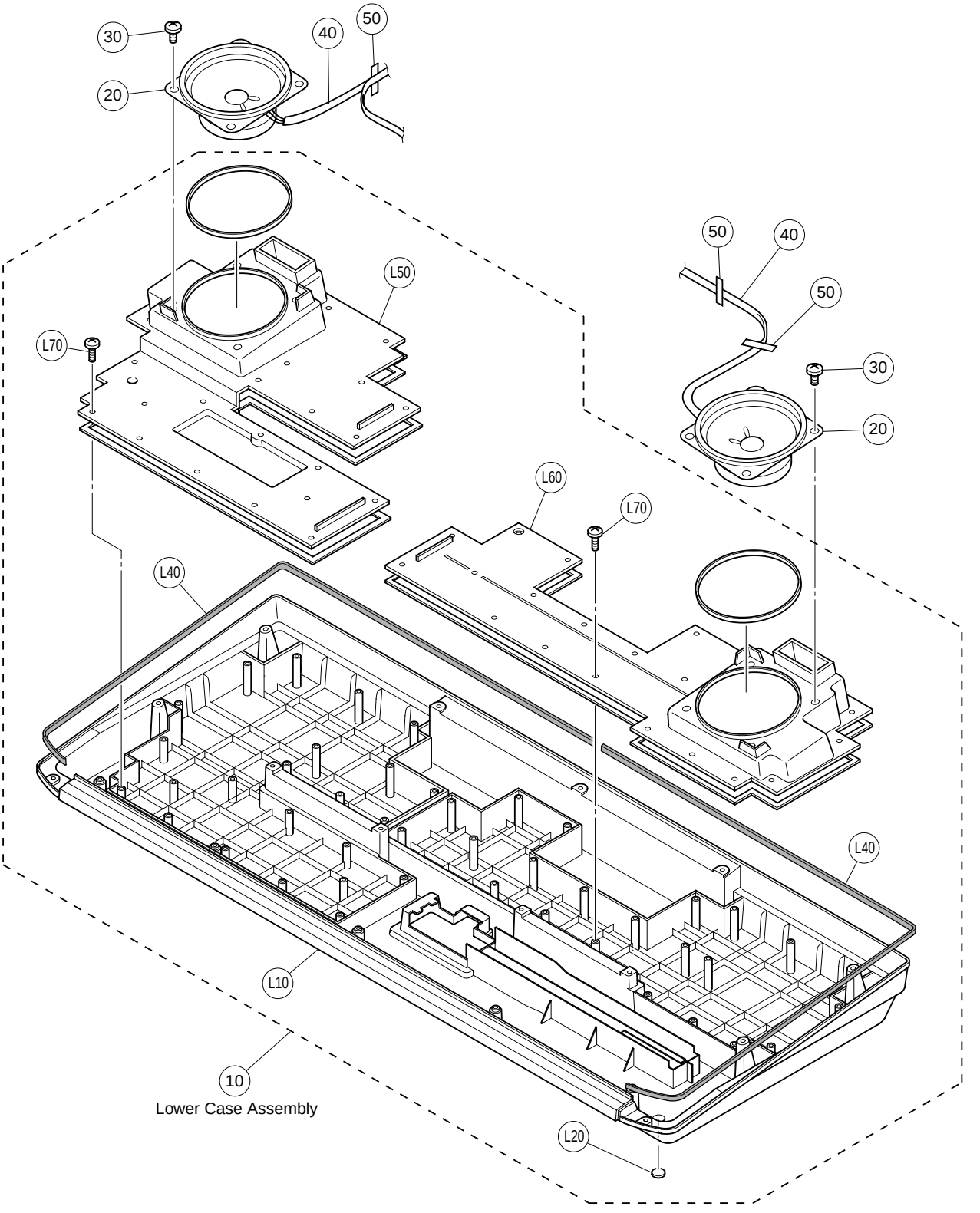

	REF NO.	PART NO.	DESCRIPTION		部品名	REMARKS	QTY	RANK
			LOWER CASE WITH SPEAKER		下ケースSP取付品	MIE-3XG		
		--	Lower Case with Speaker		下ケースSP取付品	(WG49350)		
	10	**V5417400**	Lower Case Assembly		下ケースAss'y			17
	20	**XT278A00**	Speaker	12.0cm 4 ohm 8W	スピーカー		2	06
	30	**WE974600**	Bind Head Tapping Screw-B	4.0X8 MFZN2W3	Bタイト＋BIND		8	01
	40	--	Connector Assembly	SP 6P	SP束線	(WG50110)		
	50	**VA126100**	Adhesive Tape	12X50	粘着テープ		6	03
		V5417400	Lower Case Assembly		下ケースAss'y			17
	L10	--	Lower Case		下ケース成形品	(V354930)		
	L20	**CB043750**	Foot Black	T1.6	ゴム脚		5	01
	L40	--	Cushion	PEFU 1X15X875 TE-PUT	クッションPE	(V456140)	2	
	L50	**VZ270700**	Speaker Box Assembly L	Y LEFT	SP.BOXAss'yL			09
	L60	**VZ270800**	Speaker Box Assembly R	Y RIGHT	SP.BOXAss'yR			09
*	L70	**WF492200**	Bind Head Tapping Screw-P	4.0X10 MFZN2W3	Pタイト＋BIND		45	

※: New Parts

RANK: Japan only

KEYBOARD ASSEMBLY

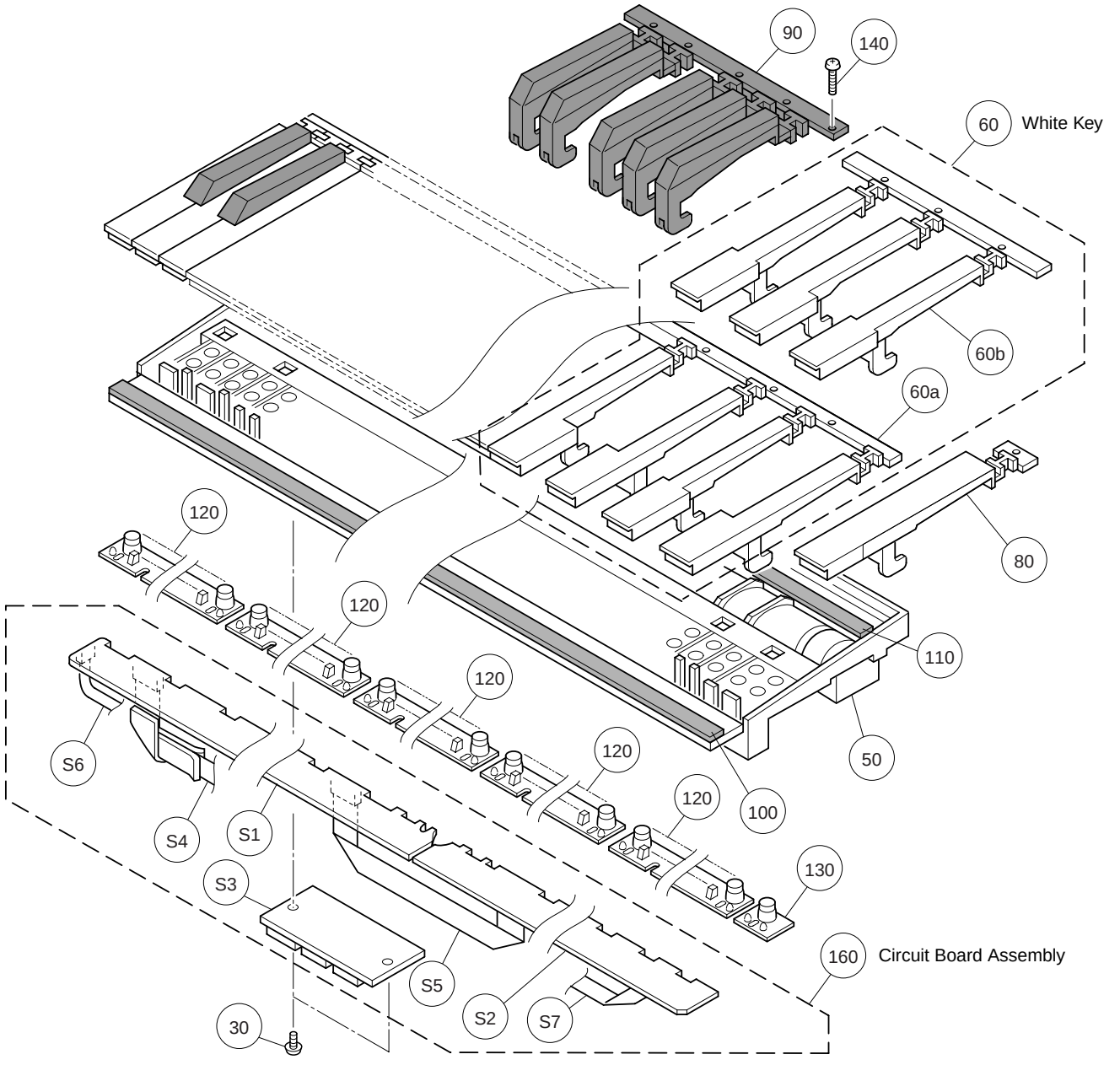

REF NO.	PART NO.	DESCRIPTION		部品名	REMARKS	QTY	RANK
		KEYBOARD ASSEMBLY	16M C61 P2M MKS5	１６Ｍ鍵盤ＭＫＳ５	MIE-3XG		
	V7632100	Keyboard Assembly	16M C61 P2M MKS5	１６Ｍ鍵盤ＭＫＳ５			21
30	**WF266600**	Bind Head Tapping Screw-P	3.0X8 MFZN2B3	Ｐタイト＋ＢＩＮＤ		2	01
50	**VU328600**	Frame	C61 16M	フレーム			10
60	**VH1809D0**	White Key	16L CEGBDFA	白鍵ＣＥＧＢＤＦＡ		5	05
60a	--	White Key	16L CEGB	白鍵ＣＥＧＢ	(VH18090)	5	
60b	--	White Key	16L DFA	白鍵ＤＦＡ	(VH18100)	5	
80	**VH181100**	White Key	16L C'	白鍵Ｃ'			01
90	**VH181200**	Black Key	16L #	黒鍵		5	03
100	**VH181300**	Felt		フェルト			03
110	**VH181400**	Rubber Sheet		ゴムシート	⎫		01
110	**WA525100**	Rubber Sheet		クッションシート	⎭		01
120	**VU328400**	Rubber Contact	16M OCT 2M 12KEYS	接点ゴム	C1-B1, C2-B2, C3-B3, C4-B4, C5-B5	5	06
130	**VU328500**	Rubber Contact	16M C' 2M 1KEY	接点ゴム	C6		05
140	**WE973000**	Bind Head Tapping Screw-P	3.0X16 MFZN2W3	Ｐタイト＋ＢＩＮＤ	⎫	21	01
140	**WE983200**	Bind Head Tapping Screw-P	3.0X16 MFZN2B3	Ｐタイト＋ＢＩＮＤ	⎭	21	01
150	**TX920280**	Grease	G-31KA 50g	グリス	(VE96850)		10
160	--	Circuit Board Assembly	16M C61 P2	鍵盤ＳＷシート	(V763220)		
	--	Circuit Board Assembly	16M C61 P2	鍵盤ＳＷシート	(V763220)		
S1	**VU648100**	Circuit Board	MK-L	ＭＫ－Ｌシート			09
S2	**VU648200**	Circuit Board	MK-H	ＭＫ－Ｈシート			09
* S3	**WF554700**	Circuit Board	MKS5F2 (KBS)	ＭＫＳ５Ｆ２シート			
S4	**VU958900**	Cable	12P	ケーブル			03
S5	**VU659500**	Cable	12P	ケーブル			02
S6	**VU659400**	Cable	7P	ケーブル			02
S7	**VU659600**	Cable	5P	ケーブル			02

※: New Parts

RANK: Japan only

■ ELECTRICAL PARTS

	REF NO.	PART NO.	DESCRIPTION		部品名	REMARKS	QTY	RANK
			ELECTRICAL PARTS		電気部品	MIE-3XG		
*		**WG503900**	Circuit Board	AM	ＡＭシート	(XY431C0)		
*		**WG228500**	Circuit Board	DM	ＤＭシート	(X7123C0)		
		V5425800	Circuit Board Assembly	JACK (HP1,2,VR1-3)	ＪＡＣＫシート集成	(XY433D0)		09
		--	Circuit Board	HP1	ＨＰ１シート	(V542670,V542580,XY433D0)		
		--	Circuit Board	HP2	ＨＰ２シート	(V542680,V542580,XY433D0)		
		--	Circuit Board	VR1	ＶＲ１シート	(V542640,V542580,XY433D0)		
		--	Circuit Board	VR2	ＶＲ２シート	(V542650,V542580,XY433D0)		
		--	Circuit Board	VR3	ＶＲ３シート	(V542660,V542580,XY433D0)		
		VU648200	Circuit Board	MK-H	ＭＫ－Ｈシート	(VU64800)(XR565C0)		09
		VU648100	Circuit Board	MK-L	ＭＫ－Ｌシート	(VU64790)(XR564C0)		09
*		**WF554700**	Circuit Board	MKS5F2 (KBS)	ＭＫＳ５Ｆ２シート	(WF55490)(X6711A0)		
		V6277700	Circuit Board Assembly	PNL (PN2,PN4)	ＰＮＬシート集成	(X7475A0)		11
		--	Circuit Board	PN2	ＰＮ２シート	(V627790,V627770,X7475A0)		
		--	Circuit Board	PN4	ＰＮ４シート	(V627810,V627770,X7475A0)		
		V6277600	Circuit Board Assembly	PNR (PN1,PN3)	ＰＮＲシート集成	(X7474A0)		17
		--	Circuit Board	PN1	ＰＮ１シート	(V627780,V627760,X7474A0)		
		--	Circuit Board	PN3	ＰＮ３シート	(V627800,V627760,X7474A0)		
*		**WG503900**	Circuit Board	AM	ＡＭシート	(XY431C0)		
		--	Silicon Grease	G-746	シリコングリス	(0412125)		
		--	Jumper Wire	0.55	ジャンパー線	(VA07890)		
	2	**--**	Connector Assembly	DJ 9P	ＤＪ束線	(WG49890)		
	3	**--**	Connector Assembly	PO 8P	ＰＯ束線	(V543550)		
	5	**WE774400**	Bind Head Tapping Screw-B	3.0X8 MFZN2B3	Ｂタイト＋ＢＩＮＤ		8	01
	7	**--**	Jack Holder		ジャック取付板	(V568610)		
	C0001	**VD930900**	Semiconductive Cera. Cap.	0.1000 25V M RX TP	半導体セラコン			01
	C0002	**VD930900**	Semiconductive Cera. Cap.	0.1000 25V M RX TP	半導体セラコン			01
	C0003	**FG612220**	Ceramic Capacitor-B	220P 50V K RX TP	セラコン（Ｂ）			01
	C0004	**FG612220**	Ceramic Capacitor-B	220P 50V K RX TP	セラコン（Ｂ）			01
	C0005	**FG644100**	Ceramic Capacitor-F	0.0100 50V Z RX TP	セラコン（Ｆ）			01
	C0006	**FG644100**	Ceramic Capacitor-F	0.0100 50V Z RX TP	セラコン（Ｆ）			01
	C0007	**UA654680**	Mylar Capacitor	0.0680 50V J RX TP	マイラーコン			02
	-0010	**UA654680**	Mylar Capacitor	0.0680 50V J RX TP	マイラーコン			02
	C0011	**FG644100**	Ceramic Capacitor-F	0.0100 50V Z RX TP	セラコン（Ｆ）			01
	C0012	**UA654680**	Mylar Capacitor	0.0680 50V J RX TP	マイラーコン			02
	-0015	**UA654680**	Mylar Capacitor	0.0680 50V J RX TP	マイラーコン			02
	C0016	**FG644100**	Ceramic Capacitor-F	0.0100 50V Z RX TP	セラコン（Ｆ）			01
	C0017	**FG644100**	Ceramic Capacitor-F	0.0100 50V Z RX TP	セラコン（Ｆ）			01
	C0018	**UA654680**	Mylar Capacitor	0.0680 50V J RX TP	マイラーコン			02
	-0021	**UA654680**	Mylar Capacitor	0.0680 50V J RX TP	マイラーコン			02
	C0022	**UR838100**	Electrolytic Cap.	100.00 16.0V RX TP	ケミコン			01
	C0023	**UR838100**	Electrolytic Cap.	100.00 16.0V RX TP	ケミコン			01
	C0024	**VD930900**	Semiconductive Cera. Cap.	0.1000 25V M RX TP	半導体セラコン			01
	C0025	**UA654100**	Mylar Capacitor	0.0100 50V J RX TP	マイラーコン			01
	-0028	**UA654100**	Mylar Capacitor	0.0100 50V J RX TP	マイラーコン			01
	C0029	**VT848900**	Electrolytic Cap.	6800 25V FORMING	ケミコン	}		03
	C0029	**UR749680**	Electrolytic Cap.	6800 25.0V FORM.	ケミコン	}		03
	C0030	**VD930900**	Semiconductive Cera. Cap.	0.1000 25V M RX TP	半導体セラコン			01
	-0032	**VD930900**	Semiconductive Cera. Cap.	0.1000 25V M RX TP	半導体セラコン			01
	C0033	**UR865220**	Electrolytic Cap.	0.22 50.0V RX TP	ケミコン			01
	C0034	**UR865220**	Electrolytic Cap.	0.22 50.0V RX TP	ケミコン			01
	C0035	**UN837100**	Electrolytic Cap.-BP	10.00 16.0V RX TP	ＢＰケミコン			01
	-0038	**UN837100**	Electrolytic Cap.-BP	10.00 16.0V RX TP	ＢＰケミコン			01
	C0039	**VD930900**	Semiconductive Cera. Cap.	0.1000 25V M RX TP	半導体セラコン			01
	C0040	**UR848100**	Electrolytic Cap.	100.00 25.0V RX TP	ケミコン			01
	C0041	**UN846470**	Electrolytic Cap.-BP	4.70 25.0V RX TP	ＢＰケミコン			01
	C0042	**UN846470**	Electrolytic Cap.-BP	4.70 25.0V RX TP	ＢＰケミコン			01
	C0043	**UR838100**	Electrolytic Cap.	100.00 16.0V RX TP	ケミコン			01
	C0045	**VR168700**	Monolithic Mylar Capacitor	ECQ-V1H224JL3	積層マイラーコン			01
	C0046	**UA654100**	Mylar Capacitor	0.0100 50V J RX TP	マイラーコン			01
	C0047	**UA653470**	Mylar Capacitor	4700P 50V J RX TP	マイラーコン			01
	C0048	**VR168700**	Monolithic Mylar Capacitor	ECQ-V1H224JL3	積層マイラーコン			01
	C0049	**UA654100**	Mylar Capacitor	0.0100 50V J RX TP	マイラーコン			01
	C0050	**UA653470**	Mylar Capacitor	4700P 50V J RX TP	マイラーコン			01
	C0051	**FG613150**	Ceramic Capacitor-B	1500P 50V K RX TP	セラコン（Ｂ）			01
	C0052	**FG613150**	Ceramic Capacitor-B	1500P 50V K RX TP	セラコン（Ｂ）			01
	C0053	**UA654220**	Mylar Capacitor	0.0220 50V J RX TP	マイラーコン			01
	C0054	**UA654270**	Mylar Capacitor	0.0270 50V J RX TP	マイラーコン			01
	C0055	**UA654150**	Mylar Capacitor	0.0150 50V J RX TP	マイラーコン			01

*: New Parts

RANK: Japan only

REF NO.	PART NO.	DESCRIPTION		部品名	REMARKS	QTY	RANK
C0056	**UA654220**	Mylar Capacitor	0.0220 50V J RX TP	マイラーコン			01
C0057	**UA654270**	Mylar Capacitor	0.0270 50V J RX TP	マイラーコン			01
C0058	**UA654150**	Mylar Capacitor	0.0150 50V J RX TP	マイラーコン			01
C0060	**VD930900**	Semiconductive Cera. Cap.	0.1000 25V M RX TP	半導体セラコン			01
C0061	**UR837470**	Electrolytic Cap.	47.00 16.0V RX TP	ケミコン			01
C0062	**VD930900**	Semiconductive Cera. Cap.	0.1000 25V M RX TP	半導体セラコン			01
C0063	**UR837470**	Electrolytic Cap.	47.00 16.0V RX TP	ケミコン			01
C0064	**UA654220**	Mylar Capacitor	0.0220 50V J RX TP	マイラーコン			01
C0065	**UA654270**	Mylar Capacitor	0.0270 50V J RX TP	マイラーコン			01
C0066	**UA654150**	Mylar Capacitor	0.0150 50V J RX TP	マイラーコン			01
C0067	**UA654220**	Mylar Capacitor	0.0220 50V J RX TP	マイラーコン			01
C0068	**UA654270**	Mylar Capacitor	0.0270 50V J RX TP	マイラーコン			01
C0069	**UA654150**	Mylar Capacitor	0.0150 50V J RX TP	マイラーコン			01
C0070	**VD930900**	Semiconductive Cera. Cap.	0.1000 25V M RX TP	半導体セラコン			01
C0071	**FG613150**	Ceramic Capacitor-B	1500P 50V K RX TP	セラコン（B）			01
C0072	**FG613150**	Ceramic Capacitor-B	1500P 50V K RX TP	セラコン（B）			01
C0073	**VR168700**	Monolithic Mylar Capacitor	ECQ-V1H224JL3	積層マイラーコン			01
C0074	**UA654100**	Mylar Capacitor	0.0100 50V J RX TP	マイラーコン			01
C0075	**UA653470**	Mylar Capacitor	4700P 50V J RX TP	マイラーコン			01
C0076	**VR168700**	Monolithic Mylar Capacitor	ECQ-V1H224JL3	積層マイラーコン			01
C0077	**UA654100**	Mylar Capacitor	0.0100 50V J RX TP	マイラーコン			01
C0078	**UA653470**	Mylar Capacitor	4700P 50V J RX TP	マイラーコン			01
C0079	**UN846470**	Electrolytic Cap.-BP	4.70 25.0V RX TP	BPケミコン			01
-0082	**UN846470**	Electrolytic Cap.-BP	4.70 25.0V RX TP	BPケミコン			01
C0083	**VD930900**	Semiconductive Cera. Cap.	0.1000 25V M RX TP	半導体セラコン			01
C0084	**UN846470**	Electrolytic Cap.-BP	4.70 25.0V RX TP	BPケミコン			01
-0095	**UN846470**	Electrolytic Cap.-BP	4.70 25.0V RX TP	BPケミコン			01
C0096	**FG612330**	Ceramic Capacitor-B	330P 50V K RX TP	セラコン（B）			01
C0097	**FG612330**	Ceramic Capacitor-B	330P 50V K RX TP	セラコン（B）			01
C0098	**UN846470**	Electrolytic Cap.-BP	4.70 25.0V RX TP	BPケミコン			01
-0103	**UN846470**	Electrolytic Cap.-BP	4.70 25.0V RX TP	BPケミコン			01
C0104	**FG612330**	Ceramic Capacitor-B	330P 50V K RX TP	セラコン（B）			01
-0109	**FG612330**	Ceramic Capacitor-B	330P 50V K RX TP	セラコン（B）			01
C0110	**VD930900**	Semiconductive Cera. Cap.	0.1000 25V M RX TP	半導体セラコン			01
-0114	**VD930900**	Semiconductive Cera. Cap.	0.1000 25V M RX TP	半導体セラコン			01
C0115	**V6490000**	Monolithic Ceramic Cap.	1.000 25V Z TATETE	積層セラコン	}		01
C0115	**VT757800**	Monolithic Ceramic Cap.	1.000 25V Z TP	積層セラコン	}		01
C0116	**FG612470**	Ceramic Capacitor-B	470P 50V K RX TP	セラコン（B）			01
C0117	**UR865220**	Electrolytic Cap.	0.22 50.0V RX TP	ケミコン			01
-0120	**UR865220**	Electrolytic Cap.	0.22 50.0V RX TP	ケミコン			01
C0121	**V6490000**	Monolithic Ceramic Cap.	1.000 25V Z TATETE	積層セラコン	}		01
C0121	**VT757800**	Monolithic Ceramic Cap.	1.000 25V Z TP	積層セラコン	}		01
C0122	**FG612470**	Ceramic Capacitor-B	470P 50V K RX TP	セラコン（B）			01
C0123	**UR866470**	Electrolytic Cap.	4.70 50.0V RX TP	ケミコン			01
C0124	**UR866470**	Electrolytic Cap.	4.70 50.0V RX TP	ケミコン			01
C0125	**UR838100**	Electrolytic Cap.	100.00 16.0V RX TP	ケミコン			01
C0126	**UR838100**	Electrolytic Cap.	100.00 16.0V RX TP	ケミコン			01
C0128	**UR848100**	Electrolytic Cap.	100.00 25.0V RX TP	ケミコン			01
C0129	**UR848100**	Electrolytic Cap.	100.00 25.0V RX TP	ケミコン			01
C0130	**VD930900**	Semiconductive Cera. Cap.	0.1000 25V M RX TP	半導体セラコン			01
C0131	**VD930900**	Semiconductive Cera. Cap.	0.1000 25V M RX TP	半導体セラコン			01
C0132	**UR828100**	Electrolytic Cap.	100.00 10.0V RX TP	ケミコン			01
C0133	**UR827330**	Electrolytic Cap.	33.00 10.0V RX TP	ケミコン			01
C0134	**UR865470**	Electrolytic Cap.	0.47 50.0V RX TP	ケミコン			01
C0135	**VD930900**	Semiconductive Cera. Cap.	0.1000 25V M RX TP	半導体セラコン			01
C0136	**UR848100**	Electrolytic Cap.	100.00 25.0V RX TP	ケミコン			01
C0137	**UR838220**	Electrolytic Cap.	220.00 16.0V RX TP	ケミコン			01
-0140	**UR838220**	Electrolytic Cap.	220.00 16.0V RX TP	ケミコン			01
C0141	**UA654470**	Mylar Capacitor	0.0470 50V J RX TP	マイラーコン			01
-0144	**UA654470**	Mylar Capacitor	0.0470 50V J RX TP	マイラーコン			01
C0146	**FG612100**	Ceramic Cap.-B	100P 50V K RX TP	セラコン B			01
C0147	**FG612100**	Ceramic Cap.-B	100P 50V K RX TP	セラコン B			01
C0148	**UR846470**	Electrolytic Cap.	4.70 25.0V RX TP	ケミコン			01
-0153	**UR846470**	Electrolytic Cap.	4.70 25.0V RX TP	ケミコン			01
C0154	**UN846470**	Electrolytic Cap.-BP	4.70 25.0V RX TP	BPケミコン			01
C0155	**UN846470**	Electrolytic Cap.-BP	4.70 25.0V RX TP	BPケミコン			01
C0200	**VD930900**	Semiconductive Cera. Cap.	0.1000 25V M RX TP	半導体セラコン			01
C0201	**VD930900**	Semiconductive Cera. Cap.	0.1000 25V M RX TP	半導体セラコン			01
C0301	**FG644220**	Ceramic Capacitor-F	0.0220 50V Z RX TP	セラコン（F）			01
-0304	**FG644220**	Ceramic Capacitor-F	0.0220 50V Z RX TP	セラコン（F）			01

※: New Parts

RANK: Japan only

REF NO.	PART NO.	DESCRIPTION		部品名	REMARKS	QTY	RANK
CN001	VB390700	Base Post Connector	PH 11P TE	ベースポスト			01
CN002	VK025100	Wire Trap	52147 7P TE	ワイヤートラップ			01
CN003	VI878600	Cable Holder	51048 8P TE	ケーブルホルダー			01
CN004	VI878700	Cable Holder	51048 9P TE	ケーブルホルダー			01
CN005	VK024800	Wire Trap	52147 4P TE	ワイヤートラップ			01
CN006	VK024900	Wire Trap	52147 5P TE	ワイヤートラップ			01
CN007	LB918060	Base Post Connector	XH 6P TE	ベースツキポスト			01
* D0001	WH031400	Diode	21DQ04 SUTOI	ショットキダイオード			
EP1	--	GND Wire Assembly Black	1P	アース線Ａｓｓ'ｙ	(V649990)		
HS001	--	Heat Sink		放熱板	(VV85640)		
IC001	XB247A00	IC	UPC4570HA-A	ＩＣ	OP AMP		02
-004	XB247A00	IC	UPC4570HA-A	ＩＣ	OP AMP		02
IC005	XU583A00	IC	BA09T	ＩＣ	REGULATOR +9V		03
IC007	XY513A00	IC	M5243AP09	ＩＣ	GRAPHIC EQUALIZER		03
IC008	XY513A00	IC	M5243AP09	ＩＣ	GRAPHIC EQUALIZER		03
IC009	XU834A00	IC	BU4066BC	ＩＣ	ANALOG SWITCH		01
IC010	XB247A00	IC	UPC4570HA-A	ＩＣ	OP AMP		02
-013	XB247A00	IC	UPC4570HA-A	ＩＣ	OP AMP		02
IC014	XS086A00	IC	BU4053BC	ＩＣ	MULTIPLEXER/DEMULTIPLEXER		02
IC015	XS086A00	IC	BU4053BC	ＩＣ	MULTIPLEXER/DEMULTIPLEXER		02
IC016	XW812A00	IC	LA4262-E	ＩＣ	POWER AMP 7W 2ch		04
IC017	XW812A00	IC	LA4262-E	ＩＣ	POWER AMP 7W 2ch		04
IC018	XQ619A00	IC	LA4705NA-E	ＩＣ	POWER AMP 17W		05
J0001	--	Jumper Wire	0.55	ジャンパー線	(VA07890)		
-0012	--	Jumper Wire	0.55	ジャンパー線	(VA07890)		
⚠ JK001	LB302260	Connector	HEC0470-01-630	電源コネクタ	DC IN 12V		02
JK002	VP599300	Pin Jack	2P YKC21-3120N	ピンジャック　２Ｐ	AUDIO OUT L/R		02
JK003	VP599300	Pin Jack	2P YKC21-3120N	ピンジャック　２Ｐ	AUDIO IN L/R		02
JK004	VT202500	DIN Connector	5P YKF51-5066	ＤＩＮコネクタ	MIDI IN		01
JK005	VT202500	DIN Connector	5P YKF51-5066	ＤＩＮコネクタ	MIDI OUT		01
JK006	VT202500	DIN Connector	5P YKF51-5066	ＤＩＮコネクタ	MIDI THRU		01
JK007	VT202500	DIN Connector	5P YKF51-5066	ＤＩＮコネクタ	MIDI MERGE IN		01
L0004	VI486800	Line Filter	SU10VD-20020	ラインフィルター			03
L0005	VB835000	Coil	FL05RD200AT 20uH	コイル　２０Ｕ			01
L0006	GE300670	Ferrite Bead	BL02RN2R1P1A	フェライトビーズ			02
L0007	VB835000	Coil	FL05RD200AT 20uH	コイル　２０Ｕ			01
L0008	VB835000	Coil	FL05RD200AT 20uH	コイル　２０Ｕ			01
L0009	GE300670	Ferrite Bead	BL02RN2R1P1A	フェライトビーズ			02
L0010	VB835000	Coil	FL05RD200AT 20uH	コイル　２０Ｕ			01
L0100	GE300670	Ferrite Bead	BL02RN2R1P1A	フェライトビーズ			02
L0101	VF456600	Coil	SBT-0180W RX 80uH	コイル　８０Ｕ			03
L0102	VF456600	Coil	SBT-0180W RX 80uH	コイル　８０Ｕ			03
R0001	HF756220	Carbon Resistor	2.2K 1/4 J AX TP	カーボン抵抗			01
R0002	HF756220	Carbon Resistor	2.2K 1/4 J AX TP	カーボン抵抗			01
R0003	HF757470	Carbon Resistor	47.0K 1/4 J AX TP	カーボン抵抗			01
R0004	HF757470	Carbon Resistor	47.0K 1/4 J AX TP	カーボン抵抗			01
R0005	HF757100	Carbon Resistor	10.0K 1/4 J AX TP	カーボン抵抗			01
R0006	HF757150	Carbon Resistor	15.0K 1/4 J AX TP	カーボン抵抗			01
-0009	HF757150	Carbon Resistor	15.0K 1/4 J AX TP	カーボン抵抗			01
R0010	HF756270	Carbon Resistor	2.7K 1/4 J AX TP	カーボン抵抗			01
-0013	HF756270	Carbon Resistor	2.7K 1/4 J AX TP	カーボン抵抗			01
R0014	HF757220	Carbon Resistor	22.0K 1/4 J AX TP	カーボン抵抗			01
R0015	HF757220	Carbon Resistor	22.0K 1/4 J AX TP	カーボン抵抗			01
R0016	HF758390	Carbon Resistor	390.0K 1/4 J AX TP	カーボン抵抗			01
-0019	HF758390	Carbon Resistor	390.0K 1/4 J AX TP	カーボン抵抗			01
R0022	HF757100	Carbon Resistor	10.0K 1/4 J AX TP	カーボン抵抗			01
R0023	HF757100	Carbon Resistor	10.0K 1/4 J AX TP	カーボン抵抗			01
R0024	HF756470	Carbon Resistor	4.7K 1/4 J AX TP	カーボン抵抗			01
R0025	HF756470	Carbon Resistor	4.7K 1/4 J AX TP	カーボン抵抗			01
R0026	HF755150	Carbon Resistor	150.0 1/4 J AX TP	カーボン抵抗			01
-0029	HF755150	Carbon Resistor	150.0 1/4 J AX TP	カーボン抵抗			01
R0030	HF757220	Carbon Resistor	22.0K 1/4 J AX TP	カーボン抵抗			01
-0037	HF757220	Carbon Resistor	22.0K 1/4 J AX TP	カーボン抵抗			01
R0038	--	Jumper Wire	0.55	ジャンパー線	(VA07890)		
R0047	HF755680	Carbon Resistor	680.0 1/4 J AX TP	カーボン抵抗			01
R0048	HF755470	Carbon Resistor	470.0 1/4 J AX TP	カーボン抵抗			01
R0049	HF755680	Carbon Resistor	680.0 1/4 J AX TP	カーボン抵抗			01
R0050	HF755470	Carbon Resistor	470.0 1/4 J AX TP	カーボン抵抗			01
R0051	HF757470	Carbon Resistor	47.0K 1/4 J AX TP	カーボン抵抗			01
R0052	HF757220	Carbon Resistor	22.0K 1/4 J AX TP	カーボン抵抗			01

*: New Parts

RANK: Japan only

REF NO.	PART NO.	DESCRIPTION		部品名	REMARKS	QTY	RANK
R0053	**HF757180**	Carbon Resistor	18.0K 1/4 J AX TP	カーボン抵抗			01
R0054	**HF757180**	Carbon Resistor	18.0K 1/4 J AX TP	カーボン抵抗			01
R0055	**HF757220**	Carbon Resistor	22.0K 1/4 J AX TP	カーボン抵抗			01
R0056	**HF757180**	Carbon Resistor	18.0K 1/4 J AX TP	カーボン抵抗			01
R0057	**HF757180**	Carbon Resistor	18.0K 1/4 J AX TP	カーボン抵抗			01
R0058	**HF756270**	Carbon Resistor	2.7K 1/4 J AX TP	カーボン抵抗			01
R0059	**HF756270**	Carbon Resistor	2.7K 1/4 J AX TP	カーボン抵抗			01
R0060	**HF757470**	Carbon Resistor	47.0K 1/4 J AX TP	カーボン抵抗			01
R0061	**HF756270**	Carbon Resistor	2.7K 1/4 J AX TP	カーボン抵抗			01
-0064	**HF756270**	Carbon Resistor	2.7K 1/4 J AX TP	カーボン抵抗			01
R0065	**HF757470**	Carbon Resistor	47.0K 1/4 J AX TP	カーボン抵抗			01
-0067	**HF757470**	Carbon Resistor	47.0K 1/4 J AX TP	カーボン抵抗			01
R0068	**HF757220**	Carbon Resistor	22.0K 1/4 J AX TP	カーボン抵抗			01
R0069	**HF757180**	Carbon Resistor	18.0K 1/4 J AX TP	カーボン抵抗			01
R0070	**HF757180**	Carbon Resistor	18.0K 1/4 J AX TP	カーボン抵抗			01
R0071	**HF757220**	Carbon Resistor	22.0K 1/4 J AX TP	カーボン抵抗			01
R0072	**HF757180**	Carbon Resistor	18.0K 1/4 J AX TP	カーボン抵抗			01
R0073	**HF757180**	Carbon Resistor	18.0K 1/4 J AX TP	カーボン抵抗			01
R0074	**HF756270**	Carbon Resistor	2.7K 1/4 J AX TP	カーボン抵抗			01
R0075	**HF756270**	Carbon Resistor	2.7K 1/4 J AX TP	カーボン抵抗			01
R0079	**HF755680**	Carbon Resistor	680.0 1/4 J AX TP	カーボン抵抗			01
R0080	**HF755470**	Carbon Resistor	470.0 1/4 J AX TP	カーボン抵抗			01
R0081	**HF755680**	Carbon Resistor	680.0 1/4 J AX TP	カーボン抵抗			01
R0082	**HF755470**	Carbon Resistor	470.0 1/4 J AX TP	カーボン抵抗			01
R0086	**HF758100**	Carbon Resistor	100.0K 1/4 J AX TP	カーボン抵抗			01
-0089	**HF758100**	Carbon Resistor	100.0K 1/4 J AX TP	カーボン抵抗			01
R0090	**HF757220**	Carbon Resistor	22.0K 1/4 J AX TP	カーボン抵抗			01
-0093	**HF757220**	Carbon Resistor	22.0K 1/4 J AX TP	カーボン抵抗			01
R0094	**HF756680**	Carbon Resistor	6.8K 1/4 J AX TP	カーボン抵抗			01
R0095	**HF756680**	Carbon Resistor	6.8K 1/4 J AX TP	カーボン抵抗			01
R0096	**HF757100**	Carbon Resistor	10.0K 1/4 J AX TP	カーボン抵抗			01
R0097	**HF757100**	Carbon Resistor	10.0K 1/4 J AX TP	カーボン抵抗			01
R0098	**HF757150**	Carbon Resistor	15.0K 1/4 J AX TP	カーボン抵抗			01
R0099	**HF757100**	Carbon Resistor	10.0K 1/4 J AX TP	カーボン抵抗			01
R0100	**HF757150**	Carbon Resistor	15.0K 1/4 J AX TP	カーボン抵抗			01
R0101	**HF757100**	Carbon Resistor	10.0K 1/4 J AX TP	カーボン抵抗			01
R0102	**HF757150**	Carbon Resistor	15.0K 1/4 J AX TP	カーボン抵抗			01
R0103	**HF757100**	Carbon Resistor	10.0K 1/4 J AX TP	カーボン抵抗			01
R0104	**HF757150**	Carbon Resistor	15.0K 1/4 J AX TP	カーボン抵抗			01
R0105	**HF757100**	Carbon Resistor	10.0K 1/4 J AX TP	カーボン抵抗			01
R0106	**HF757150**	Carbon Resistor	15.0K 1/4 J AX TP	カーボン抵抗			01
R0107	**HF757100**	Carbon Resistor	10.0K 1/4 J AX TP	カーボン抵抗			01
R0108	**HF757150**	Carbon Resistor	15.0K 1/4 J AX TP	カーボン抵抗			01
R0109	**HF757100**	Carbon Resistor	10.0K 1/4 J AX TP	カーボン抵抗			01
R0112	**HF756390**	Carbon Resistor	3.9K 1/4 J AX TP	カーボン抵抗			01
-0117	**HF756390**	Carbon Resistor	3.9K 1/4 J AX TP	カーボン抵抗			01
R0118	**HF757470**	Carbon Resistor	47.0K 1/4 J AX TP	カーボン抵抗			01
-0123	**HF757470**	Carbon Resistor	47.0K 1/4 J AX TP	カーボン抵抗			01
R0124	**HF757100**	Carbon Resistor	10.0K 1/4 J AX TP	カーボン抵抗			01
-0129	**HF757100**	Carbon Resistor	10.0K 1/4 J AX TP	カーボン抵抗			01
R0136	**HF757470**	Carbon Resistor	47.0K 1/4 J AX TP	カーボン抵抗			01
R0139	**HF756470**	Carbon Resistor	4.7K 1/4 J AX TP	カーボン抵抗			01
-0142	**HF756470**	Carbon Resistor	4.7K 1/4 J AX TP	カーボン抵抗			01
R0143	**HF758100**	Carbon Resistor	100.0K 1/4 J AX TP	カーボン抵抗			01
R0144	**HF758100**	Carbon Resistor	100.0K 1/4 J AX TP	カーボン抵抗			01
R0145	**HF756470**	Carbon Resistor	4.7K 1/4 J AX TP	カーボン抵抗			01
R0146	**HF756470**	Carbon Resistor	4.7K 1/4 J AX TP	カーボン抵抗			01
R0147	**HF758100**	Carbon Resistor	100.0K 1/4 J AX TP	カーボン抵抗			01
R0148	**HF758100**	Carbon Resistor	100.0K 1/4 J AX TP	カーボン抵抗			01
R0149	**HF755330**	Carbon Resistor	330.0 1/4 J AX TP	カーボン抵抗			01
R0150	**HF755330**	Carbon Resistor	330.0 1/4 J AX TP	カーボン抵抗			01
R0151	**HF755470**	Carbon Resistor	470.0 1/4 J AX TP	カーボン抵抗			01
R0152	**HF755330**	Carbon Resistor	330.0 1/4 J AX TP	カーボン抵抗			01
R0153	**HF755330**	Carbon Resistor	330.0 1/4 J AX TP	カーボン抵抗			01
R0154	**HF755470**	Carbon Resistor	470.0 1/4 J AX TP	カーボン抵抗			01
R0157	**HF757100**	Carbon Resistor	10.0K 1/4 J AX TP	カーボン抵抗			01
R0158	**HF753220**	Carbon Resistor	2.2 1/4 J AX TP	カーボン抵抗			01
R0159	**HF755100**	Carbon Resistor	100.0 1/4 J AX TP	カーボン抵抗			01
-0162	**HF755100**	Carbon Resistor	100.0 1/4 J AX TP	カーボン抵抗			01
R0163	**HF753220**	Carbon Resistor	2.2 1/4 J AX TP	カーボン抵抗			01

※: New Parts

RANK: Japan only

	REF NO.	PART NO.	DESCRIPTION		部品名	REMARKS	QTY	RANK
	R0164	**HF755330**	Carbon Resistor	330.0 1/4 J AX TP	カーボン抵抗			01
	-0167	**HF755330**	Carbon Resistor	330.0 1/4 J AX TP	カーボン抵抗			01
	R0168	**HF753220**	Carbon Resistor	2.2 1/4 J AX TP	カーボン抵抗			01
	R0169	**HF753220**	Carbon Resistor	2.2 1/4 J AX TP	カーボン抵抗			01
	R0170	**HF755220**	Carbon Resistor	220.0 1/4 J AX TP	カーボン抵抗			01
	R0171	**HF755220**	Carbon Resistor	220.0 1/4 J AX TP	カーボン抵抗			01
	R0172	**HF758100**	Carbon Resistor	100.0K 1/4 J AX TP	カーボン抵抗			01
	R0173	**HF758100**	Carbon Resistor	100.0K 1/4 J AX TP	カーボン抵抗			01
⚠	SW001	**V9661700**	Push Switch	SY16-32-4(U99S2)/T	プッシュSW	STANDBY/ON		03
⚠	SW001	**VY980400**	Push Switch	SDDLB15700 J,UC,CE	プッシュSW			03
⚠	T0001	**V5222800**	Transformer	ST-9Z21-11108	マッチングトランス			06
⚠	T0002	**V5222800**	Transformer	ST-9Z21-11108	マッチングトランス			06
⚠	TH001	**V8132900**	Fuse	MF-R250-AP-10	マルチヒューズ			03
⚠	TH001	**VV458000**	Protector Switch	RUEF250 2.50A 30V	ポリスイッチ			03
	TR001	**VF331200**	Digital Transistor	DTC124ES R1,R2 22K	デジタルトランジスタ			03
	-004	**VF331200**	Digital Transistor	DTC124ES R1,R2 22K	デジタルトランジスタ			03
	TR001	**WB039200**	Digital Transistor	DTC124ESA TP	デジタルトランジスタ			01
	-004	**WB039200**	Digital Transistor	DTC124ESA TP	デジタルトランジスタ			01
	TR001	**WD091600**	Digital Transistor	RT1N241S-T112	デジタルトランジスタ			01
	-004	**WD091600**	Digital Transistor	RT1N241S-T112	デジタルトランジスタ			01
*		**WG228500**	Circuit Board	DM	DMシート	(X7123C0)		
	1	**WE774400**	Bind Head Tapping Screw-B	3.0X8 MFZN2B3	Bタイト＋BIND			01
	C0001	**US064100**	Ceramic Capacitor-B (chip)	0.0100 50V K RECT.	チップセラ（B）			01
	C0002	**UF047100**	Electrolytic Cap. (chip)	10 25V UWX1C1	チップケミコン			01
	C0003	**US064100**	Ceramic Capacitor-B (chip)	0.0100 50V K RECT.	チップセラ（B）			01
*	C0004	**WG233900**	Electrolytic Cap.	220.00 25.0V TATEJ	ケミコン			
	C0005	**US064100**	Ceramic Capacitor-B (chip)	0.0100 50V K RECT.	チップセラ（B）			01
	C0006	**US062470**	Ceramic Capacitor-SL(chip)	470P 50V J RECT.	チップセラ（SL）			01
	C0007	**US064100**	Ceramic Capacitor-B (chip)	0.0100 50V K RECT.	チップセラ（B）			01
	C0008	**US062470**	Ceramic Capacitor-SL(chip)	470P 50V J RECT.	チップセラ（SL）			01
	C0009	**UF037220**	Electrolytic Cap. (chip)	22 16V	チップケミコン			01
	C0010	**UF037220**	Electrolytic Cap. (chip)	22 16V	チップケミコン			01
	C0011	**UF028100**	Electrolytic Cap. (chip)	100 10V	チップケミコン			01
	C0012	**US062220**	Ceramic Capacitor-SL(chip)	220P 50V J RECT.	チップセラ（SL）			01
	C0013	**US064100**	Ceramic Capacitor-B (chip)	0.0100 50V K RECT.	チップセラ（B）			01
	C0014	**US064100**	Ceramic Capacitor-B (chip)	0.0100 50V K RECT.	チップセラ（B）			01
	C0015	**US062220**	Ceramic Capacitor-SL(chip)	220P 50V J RECT.	チップセラ（SL）			01
	C0016	**UR729100**	Electrolytic Cap.	1000 10.0V FORM.	ケミコン			01
	C0017	**US064100**	Ceramic Capacitor-B (chip)	0.0100 50V K RECT.	チップセラ（B）			01
	-0025	**US064100**	Ceramic Capacitor-B (chip)	0.0100 50V K RECT.	チップセラ（B）			01
	C0026	**UF037220**	Electrolytic Cap. (chip)	22 16V	チップケミコン			01
	C0027	**US064100**	Ceramic Capacitor-B (chip)	0.0100 50V K RECT.	チップセラ（B）			01
	-0029	**US064100**	Ceramic Capacitor-B (chip)	0.0100 50V K RECT.	チップセラ（B）			01
	C0030	**UF037220**	Electrolytic Cap. (chip)	22 16V	チップケミコン			01
	C0031	**US064100**	Ceramic Capacitor-B (chip)	0.0100 50V K RECT.	チップセラ（B）			01
	-0033	**US064100**	Ceramic Capacitor-B (chip)	0.0100 50V K RECT.	チップセラ（B）			01
	C0034	**UF037220**	Electrolytic Cap. (chip)	22 16V	チップケミコン			01
	C0035	**UF037100**	Electrolytic Cap. (chip)	10 16V	チップケミコン			01
	C0037	**US135100**	Ceramic Capacitor-F (chip)	0.1000 16V Z RECT.	チップセラ（F）			01
	C0038	**US135100**	Ceramic Capacitor-F (chip)	0.1000 16V Z RECT.	チップセラ（F）			01
	C0039	**US064100**	Ceramic Capacitor-B (chip)	0.0100 50V K RECT.	チップセラ（B）			01
	C0040	**US135100**	Ceramic Capacitor-F (chip)	0.1000 16V Z RECT.	チップセラ（F）			01
	C0041	**US135100**	Ceramic Capacitor-F (chip)	0.1000 16V Z RECT.	チップセラ（F）			01
	C0042	**UF037100**	Electrolytic Cap. (chip)	10 16V	チップケミコン			01
	C0043	**US135100**	Ceramic Capacitor-F (chip)	0.1000 16V Z RECT.	チップセラ（F）			01
	C0044	**US064100**	Ceramic Capacitor-B (chip)	0.0100 50V K RECT.	チップセラ（B）			01
	C0045	**UF037220**	Electrolytic Cap. (chip)	22 16V	チップケミコン			01
	C0046	**US135100**	Ceramic Capacitor-F (chip)	0.1000 16V Z RECT.	チップセラ（F）			01
	C0047	**US064100**	Ceramic Capacitor-B (chip)	0.0100 50V K RECT.	チップセラ（B）			01
	C0048	**UF046470**	Electrolytic Cap. (chip)	4.7 25V UWX1E4	チップケミコン			01
	-0051	**UF046470**	Electrolytic Cap. (chip)	4.7 25V UWX1E4	チップケミコン			01
	C0052	**US064100**	Ceramic Capacitor-B (chip)	0.0100 50V K RECT.	チップセラ（B）			01
	C0053	**US064100**	Ceramic Capacitor-B (chip)	0.0100 50V K RECT.	チップセラ（B）			01
	C0054	**US062330**	Ceramic Capacitor-SL(chip)	330P 50V J RECT.	チップセラ（SL）			01
	C0055	**US062330**	Ceramic Capacitor-SL(chip)	330P 50V J RECT.	チップセラ（SL）			01
	C0056	**US064100**	Ceramic Capacitor-B (chip)	0.0100 50V K RECT.	チップセラ（B）			01
	C0057	**UF037220**	Electrolytic Cap. (chip)	22 16V	チップケミコン			01
	C0058	**US064100**	Ceramic Capacitor-B (chip)	0.0100 50V K RECT.	チップセラ（B）			01
	C0059	**US064100**	Ceramic Capacitor-B (chip)	0.0100 50V K RECT.	チップセラ（B）			01

*: New Parts

RANK: Japan only

REF NO.	PART NO.	DESCRIPTION		部品名	REMARKS	QTY	RANK
C0060	**US062220**	Ceramic Capacitor-SL(chip)	220P 50V J RECT.	チップセラ（ＳＬ）			01
-0062	**US062220**	Ceramic Capacitor-SL(chip)	220P 50V J RECT.	チップセラ（ＳＬ）			01
C0063	**US135100**	Ceramic Capacitor-F (chip)	0.1000 16V Z RECT.	チップセラ（Ｆ）			01
C0064	**US062220**	Ceramic Capacitor-SL(chip)	220P 50V J RECT.	チップセラ（ＳＬ）			01
C0065	**UF037220**	Electrolytic Cap. (chip)	22 16V	チップケミコン			01
C0066	**UF037220**	Electrolytic Cap. (chip)	22 16V	チップケミコン			01
C0067	**US135100**	Ceramic Capacitor-F (chip)	0.1000 16V Z RECT.	チップセラ（Ｆ）			01
C0068	**US063220**	Ceramic Capacitor-B (chip)	2200P 50V K RECT.	チップセラ（Ｂ）			01
C0069	**US063220**	Ceramic Capacitor-B (chip)	2200P 50V K RECT.	チップセラ（Ｂ）			01
C0070	**US064100**	Ceramic Capacitor-B (chip)	0.0100 50V K RECT.	チップセラ（Ｂ）			01
-0072	**US064100**	Ceramic Capacitor-B (chip)	0.0100 50V K RECT.	チップセラ（Ｂ）			01
C0073	**UF037220**	Electrolytic Cap. (chip)	22 16V	チップケミコン			01
C0074	**US062470**	Ceramic Capacitor-SL(chip)	470P 50V J RECT.	チップセラ（ＳＬ）			01
C0076	**US064100**	Ceramic Capacitor-B (chip)	0.0100 50V K RECT.	チップセラ（Ｂ）			01
C0077	**UF037220**	Electrolytic Cap. (chip)	22 16V	チップケミコン			01
C0078	**UF037220**	Electrolytic Cap. (chip)	22 16V	チップケミコン			01
C0079	**US064100**	Ceramic Capacitor-B (chip)	0.0100 50V K RECT.	チップセラ（Ｂ）			01
-0085	**US064100**	Ceramic Capacitor-B (chip)	0.0100 50V K RECT.	チップセラ（Ｂ）			01
C0086	**US061270**	Ceramic Capacitor-CH(chip)	27P 50V J RECT.	チップセラ（ＣＨ）			01
C0087	**US061270**	Ceramic Capacitor-CH(chip)	27P 50V J RECT.	チップセラ（ＣＨ）			01
C0088	**UF037100**	Electrolytic Cap. (chip)	10 16V	チップケミコン			01
C0089	**UF037220**	Electrolytic Cap. (chip)	22 16V	チップケミコン			01
C0090	**US135100**	Ceramic Capacitor-F (chip)	0.1000 16V Z RECT.	チップセラ（Ｆ）			01
C0091	**US135100**	Ceramic Capacitor-F (chip)	0.1000 16V Z RECT.	チップセラ（Ｆ）			01
C0092	**US064100**	Ceramic Capacitor-B (chip)	0.0100 50V K RECT.	チップセラ（Ｂ）			01
-0094	**US064100**	Ceramic Capacitor-B (chip)	0.0100 50V K RECT.	チップセラ（Ｂ）			01
C0095	**US135100**	Ceramic Capacitor-F (chip)	0.1000 16V Z RECT.	チップセラ（Ｆ）			01
C0096	**UF037100**	Electrolytic Cap. (chip)	10 16V	チップケミコン			01
C0097	**US064100**	Ceramic Capacitor-B (chip)	0.0100 50V K RECT.	チップセラ（Ｂ）			01
C0098	**US064100**	Ceramic Capacitor-B (chip)	0.0100 50V K RECT.	チップセラ（Ｂ）			01
C0099	**US135100**	Ceramic Capacitor-F (chip)	0.1000 16V Z RECT.	チップセラ（Ｆ）			01
C0100	**US064100**	Ceramic Capacitor-B (chip)	0.0100 50V K RECT.	チップセラ（Ｂ）			01
-0104	**US064100**	Ceramic Capacitor-B (chip)	0.0100 50V K RECT.	チップセラ（Ｂ）			01
C0105	**UF037220**	Electrolytic Cap. (chip)	22 16V	チップケミコン			01
C0106	**UF037220**	Electrolytic Cap. (chip)	22 16V	チップケミコン			01
C0107	**UF046470**	Electrolytic Cap. (chip)	4.7 25V UWX1E4	チップケミコン			01
-0110	**UF046470**	Electrolytic Cap. (chip)	4.7 25V UWX1E4	チップケミコン			01
C0111	**US062330**	Ceramic Capacitor-SL(chip)	330P 50V J RECT.	チップセラ（ＳＬ）			01
C0112	**US062330**	Ceramic Capacitor-SL(chip)	330P 50V J RECT.	チップセラ（ＳＬ）			01
C0113	**US062220**	Ceramic Capacitor-SL(chip)	220P 50V J RECT.	チップセラ（ＳＬ）			01
-0116	**US062220**	Ceramic Capacitor-SL(chip)	220P 50V J RECT.	チップセラ（ＳＬ）			01
C0117	**UF037220**	Electrolytic Cap. (chip)	22 16V	チップケミコン			01
C0118	**UF037220**	Electrolytic Cap. (chip)	22 16V	チップケミコン			01
C0119	**US135100**	Ceramic Capacitor-F (chip)	0.1000 16V Z RECT.	チップセラ（Ｆ）			01
C0120	**US064100**	Ceramic Capacitor-B (chip)	0.0100 50V K RECT.	チップセラ（Ｂ）			01
C0121	**US064100**	Ceramic Capacitor-B (chip)	0.0100 50V K RECT.	チップセラ（Ｂ）			01
C0122	**US063220**	Ceramic Capacitor-B (chip)	2200P 50V K RECT.	チップセラ（Ｂ）			01
C0123	**US063220**	Ceramic Capacitor-B (chip)	2200P 50V K RECT.	チップセラ（Ｂ）			01
C0124	**US064100**	Ceramic Capacitor-B (chip)	0.0100 50V K RECT.	チップセラ（Ｂ）			01
-0127	**US064100**	Ceramic Capacitor-B (chip)	0.0100 50V K RECT.	チップセラ（Ｂ）			01
C0150	**US064100**	Ceramic Capacitor-B (chip)	0.0100 50V K RECT.	チップセラ（Ｂ）			01
-0153	**US064100**	Ceramic Capacitor-B (chip)	0.0100 50V K RECT.	チップセラ（Ｂ）			01
C0200	**US062470**	Ceramic Capacitor-SL(chip)	470P 50V J RECT.	チップセラ（ＳＬ）			01
C0201	**US062470**	Ceramic Capacitor-SL(chip)	470P 50V J RECT.	チップセラ（ＳＬ）			01
C0202	**UF037100**	Electrolytic Cap. (chip)	10 16V	チップケミコン			01
C0203	**US064100**	Ceramic Capacitor-B (chip)	0.0100 50V K RECT.	チップセラ（Ｂ）			01
C0204	**US063100**	Ceramic Capacitor-B (chip)	1000P 50V K RECT.	チップセラ（Ｂ）			01
C0205	**US063100**	Ceramic Capacitor-B (chip)	1000P 50V K RECT.	チップセラ（Ｂ）			01
C0206	**US064100**	Ceramic Capacitor-B (chip)	0.0100 50V K RECT.	チップセラ（Ｂ）			01
C0207	**US135100**	Ceramic Capacitor-F (chip)	0.1000 16V Z RECT.	チップセラ（Ｆ）			01
C0208	**US064100**	Ceramic Capacitor-B (chip)	0.0100 50V K RECT.	チップセラ（Ｂ）			01
C0209	**US064100**	Ceramic Capacitor-B (chip)	0.0100 50V K RECT.	チップセラ（Ｂ）			01
C0211	**US064100**	Ceramic Capacitor-B (chip)	0.0100 50V K RECT.	チップセラ（Ｂ）			01
-0216	**US064100**	Ceramic Capacitor-B (chip)	0.0100 50V K RECT.	チップセラ（Ｂ）			01
C0300	**US063220**	Ceramic Capacitor-B (chip)	2200P 50V K RECT.	チップセラ（Ｂ）			01
C0301	**US063220**	Ceramic Capacitor-B (chip)	2200P 50V K RECT.	チップセラ（Ｂ）			01
CN001	**VK025100**	Wire Trap	52147 7P TE	ワイヤートラップ			01
CN002	**VF728300**	Wire Trap	52147 6P TE	ワイヤートラップ			01
CN003	**VK024700**	Wire Trap	52147 3P TE	ワイヤートラップ			01
CN004	**V2426700**	Connector, FFC	52207 11P SE	ＦＦＣコネクター			01

※: New Parts

RANK: Japan only

	REF NO.	PART NO.	DESCRIPTION		部品名	REMARKS	QTY	RANK
	CN005	**VK025200**	Wire Trap	52147 8P TE	ワイヤートラップ			01
	CN006	**VK025300**	Wire Trap	52147 9P TE	ワイヤートラップ			01
	CN007	**VB390700**	Base Post Connector	PH 11P TE	ベースポスト			01
	D0001	**VZ060500**	Diode	SFPB-62V TE	ダイオード			01
	D0002	**VV925900**	Diode	RLS-73 TE-11 TP	ダイオード			01
	D0003	**VV925900**	Diode	RLS-73 TE-11 TP	ダイオード			01
	IC001	**XJ598A00**	IC	NJM78L05UA	IC	REGULATOR +5V		02
*	IC002	**X7199B00**	IC	MX29LV160BBTC-70G	IC	FLASH ROM 16M MAIN		
	IC003	**XT514A00**	IC	SI-8050S(LF1103)	IC	DC-DC CONVERTER		05
	IC004	**X3860A00**	IC	MSM51V18165F-60T3K	IC	DRAM 16M		08
	IC004	**X4027A00**	IC	MSM51V18165F-50T3K	IC	}		
	IC004	**X4028A00**	IC	GLT4160L16P-45TC	IC	}		08
	IC005	**XU947C00**	IC	HG73C205AFD	IC	SWX00B		09
	IC006	**XY782A00**	IC	AD1854JRSRL	IC	DAC		05
	IC007	**X0638A00**	IC	UPC2933AT-E1-AZ	IC	REGULATOR +3.3V		03
	IC008	**XY495200**	IC	MX23C3210MC10	IC	MASK ROM 32M WAVE1		06
*	IC009	**X7205100**	IC	HD6437042AH05FV	IC	CPU		
	IC010	**X7351A00**	IC	UPC4570G2-E1-A	IC	OP AMP		01
	IC011	**XV077B00**	IC	MSM514260E-60J3R1	IC	DRAM 4M		07
	IC012	**X7351A00**	IC	UPC4570G2-E1-A	IC	OP AMP		01
	IC013	**XY496200**	IC	MX23C3210MC10	IC	MASK ROM 32M WAVE2		06
	IC014	**XP226A00**	IC	PST591D(MMP4P)	IC	SYSTEM RESET		03
	IC015	**XW762A00**	IC	TC74HC138AF(EL,F)	IC	DECODER		02
	IC015	**XW793A00**	IC	SN74HC138NSR	IC	}		02
	IC015	**XY353A00**	IC	MM74HC138SJX_NL	IC	}		02
	IC016	**XL093A00**	IC	HD74HC08FPEL-E	IC	AND		01
	IC016	**XW893A00**	IC	SN74HC08NSR	IC	}		01
	IC017	**XY782A00**	IC	AD1854JRSRL	IC	DAC		05
	IC018	**XU947C00**	IC	HG73C205AFD	IC	SWX00B		09
	IC019	**XV833A00**	IC	MBCG46183-129-PFV	IC	SIO4 (GATE ARRAY)		06
	IC020	**X7351A00**	IC	UPC4570G2-E1-A	IC	OP AMP		01
	IC021	**V9924900**	Photo Coupler	PC410L0NIP	フォトカプラ			03
	IC022	**V9924900**	Photo Coupler	PC410L0NIP	フォトカプラ			03
*	IC024	**X7206A00**	IC	SN74LVC245ANSR	IC	TRANSCEIVER		
*	-026	**X7206A00**	IC	SN74LVC245ANSR	IC	TRANSCEIVER		
*	IC027	**X4500A00**	IC	SN74LVC08ANSR	IC	AND		
	IC028	**X5405A00**	IC	SN74LVC32APWR	IC	OR		01
	IC029	**X4135A00**	IC	SN74AHC1G00DCKR	IC	NAND GATE		01
	L0001	**VN381200**	Coil	SNT-D20TF 10uH	コイル SN 10u			03
	L0002	**V3811700**	Choke Coil	220U LHL13NB221K	チョークコイル			03
	L0003	**VQ724900**	Chip Inductance	BK2125HM601-T	チップインダクタ			01
	-0005	**VQ724900**	Chip Inductance	BK2125HM601-T	チップインダクタ			01
*	L0008	**V6404400**	Chip Inductance	BLM18BD222SN1D	チップインダクタ			
*	-0015	**V6404400**	Chip Inductance	BLM18BD222SN1D	チップインダクタ			
	L0016	**VQ724900**	Chip Inductance	BK2125HM601-T	チップインダクタ			01
	-0027	**VQ724900**	Chip Inductance	BK2125HM601-T	チップインダクタ			01
*	L0028	**V6404400**	Chip Inductance	BLM18BD222SN1D	チップインダクタ			
	L0101	**VQ724900**	Chip Inductance	BK2125HM601-T	チップインダクタ			01
	L0102	**VQ724900**	Chip Inductance	BK2125HM601-T	チップインダクタ			01
	L0300	**VQ724900**	Chip Inductance	BK2125HM601-T	チップインダクタ			01
	L0301	**VQ724900**	Chip Inductance	BK2125HM601-T	チップインダクタ			01
*	L0302	**V6404400**	Chip Inductance	BLM18BD222SN1D	チップインダクタ			
	L0303	**RD350000**	Carbon Resistor (chip)	0 63M J RECT.	チップ抵抗			01
	L0304	**RD350000**	Carbon Resistor (chip)	0 63M J RECT.	チップ抵抗			01
	R0001	**RD354330**	Carbon Resistor (chip)	33.0 63M J RECT.	チップ抵抗			01
	R0002	**RD357470**	Carbon Resistor (chip)	47.0K 63M J RECT.	チップ抵抗			01
	-0004	**RD357470**	Carbon Resistor (chip)	47.0K 63M J RECT.	チップ抵抗			01
	R0005	**RD356100**	Carbon Resistor (chip)	1.0K 63M J RECT.	チップ抵抗			01
	R0006	**RD356100**	Carbon Resistor (chip)	1.0K 63M J RECT.	チップ抵抗			01
	R0007	**RD355220**	Carbon Resistor (chip)	220.0 63M J RECT.	チップ抵抗			01
	R0008	**RD355220**	Carbon Resistor (chip)	220.0 63M J RECT.	チップ抵抗			01
	R0009	**RD357470**	Carbon Resistor (chip)	47.0K 63M J RECT.	チップ抵抗			01
	R0010	**RD357470**	Carbon Resistor (chip)	47.0K 63M J RECT.	チップ抵抗			01
	R0012	**RD356100**	Carbon Resistor (chip)	1.0K 63M J RECT.	チップ抵抗			01
	R0013	**RD355220**	Carbon Resistor (chip)	220.0 63M J RECT.	チップ抵抗			01
	R0014	**RD357470**	Carbon Resistor (chip)	47.0K 63M J RECT.	チップ抵抗			01
	-0016	**RD357470**	Carbon Resistor (chip)	47.0K 63M J RECT.	チップ抵抗			01
	R0017	**RD355330**	Carbon Resistor (chip)	330.0 63M J RECT.	チップ抵抗			01
	R0018	**RD357470**	Carbon Resistor (chip)	47.0K 63M J RECT.	チップ抵抗			01
	R0020	**RD357470**	Carbon Resistor (chip)	47.0K 63M J RECT.	チップ抵抗			01

*: New Parts

RANK: Japan only

REF NO.	PART NO.	DESCRIPTION		部品名	REMARKS	QTY	RANK
-0024	**RD357470**	Carbon Resistor (chip)	47.0K 63M J RECT.	チップ抵抗			01
R0025	**RD356560**	Carbon Resistor (chip)	5.6K 63M J RECT.	チップ抵抗			01
R0027	**RD356470**	Carbon Resistor (chip)	4.7K 63M J RECT.	チップ抵抗			01
R0028	**RD356470**	Carbon Resistor (chip)	4.7K 63M J RECT.	チップ抵抗			01
R0029	**RD357470**	Carbon Resistor (chip)	47.0K 63M J RECT.	チップ抵抗			01
-0033	**RD357470**	Carbon Resistor (chip)	47.0K 63M J RECT.	チップ抵抗			01
R0044	**RD356560**	Carbon Resistor (chip)	5.6K 63M J RECT.	チップ抵抗			01
-0047	**RD356560**	Carbon Resistor (chip)	5.6K 63M J RECT.	チップ抵抗			01
R0048	**RD357470**	Carbon Resistor (chip)	47.0K 63M J RECT.	チップ抵抗			01
R0049	**RD356560**	Carbon Resistor (chip)	5.6K 63M J RECT.	チップ抵抗			01
R0050	**RD356560**	Carbon Resistor (chip)	5.6K 63M J RECT.	チップ抵抗			01
R0052	**RD356560**	Carbon Resistor (chip)	5.6K 63M J RECT.	チップ抵抗			01
R0054	**RD356560**	Carbon Resistor (chip)	5.6K 63M J RECT.	チップ抵抗			01
R0056	**RD357470**	Carbon Resistor (chip)	47.0K 63M J RECT.	チップ抵抗			01
R0057	**RD356560**	Carbon Resistor (chip)	5.6K 63M J RECT.	チップ抵抗			01
-0060	**RD356560**	Carbon Resistor (chip)	5.6K 63M J RECT.	チップ抵抗			01
R0070	**RD357470**	Carbon Resistor (chip)	47.0K 63M J RECT.	チップ抵抗			01
R0071	**RD357470**	Carbon Resistor (chip)	47.0K 63M J RECT.	チップ抵抗			01
R0073	**RD357100**	Carbon Resistor (chip)	10.0K 63M J RECT.	チップ抵抗			01
R0074	**RD357100**	Carbon Resistor (chip)	10.0K 63M J RECT.	チップ抵抗			01
R0075	**RD355220**	Carbon Resistor (chip)	220.0 63M J RECT.	チップ抵抗			01
R0076	**RD355220**	Carbon Resistor (chip)	220.0 63M J RECT.	チップ抵抗			01
R0077	**RD357470**	Carbon Resistor (chip)	47.0K 63M J RECT.	チップ抵抗			01
R0078	**RD350000**	Carbon Resistor (chip)	0 63M J RECT.	チップ抵抗			01
R0079	**RD355680**	Carbon Resistor (chip)	680.0 63M J RECT.	チップ抵抗			01
R0080	**RD356330**	Carbon Resistor (chip)	3.3K 63M J RECT.	チップ抵抗			01
R0081	**RD355220**	Carbon Resistor (chip)	220.0 63M J RECT.	チップ抵抗			01
R0082	**RD357100**	Carbon Resistor (chip)	10.0K 63M J RECT.	チップ抵抗			01
R0083	**RD357470**	Carbon Resistor (chip)	47.0K 63M J RECT.	チップ抵抗			01
-0085	**RD357470**	Carbon Resistor (chip)	47.0K 63M J RECT.	チップ抵抗			01
R0086	**RD356100**	Carbon Resistor (chip)	1.0K 63M J RECT.	チップ抵抗			01
R0087	**RD359100**	Carbon Resistor (chip)	1.0M 63M J RECT.	チップ抵抗			01
R0088	**RD355220**	Carbon Resistor (chip)	220.0 63M J RECT.	チップ抵抗			01
R0089	**RD355470**	Carbon Resistor (chip)	470.0 63M J RECT.	チップ抵抗			01
R0090	**RD355220**	Carbon Resistor (chip)	220.0 63M J RECT.	チップ抵抗			01
R0091	**RD355220**	Carbon Resistor (chip)	220.0 63M J RECT.	チップ抵抗			01
R0092	**RD356470**	Carbon Resistor (chip)	4.7K 63M J RECT.	チップ抵抗			01
R0093	**RD356470**	Carbon Resistor (chip)	4.7K 63M J RECT.	チップ抵抗			01
R0094	**RD356560**	Carbon Resistor (chip)	5.6K 63M J RECT.	チップ抵抗			01
-0099	**RD356560**	Carbon Resistor (chip)	5.6K 63M J RECT.	チップ抵抗			01
R0101	**RD356560**	Carbon Resistor (chip)	5.6K 63M J RECT.	チップ抵抗			01
R0103	**RD356560**	Carbon Resistor (chip)	5.6K 63M J RECT.	チップ抵抗			01
-0105	**RD356560**	Carbon Resistor (chip)	5.6K 63M J RECT.	チップ抵抗			01
R0106	**RD357100**	Carbon Resistor (chip)	10.0K 63M J RECT.	チップ抵抗			01
R0107	**RD356560**	Carbon Resistor (chip)	5.6K 63M J RECT.	チップ抵抗			01
R0108	**RD356560**	Carbon Resistor (chip)	5.6K 63M J RECT.	チップ抵抗			01
R0109	**RD357100**	Carbon Resistor (chip)	10.0K 63M J RECT.	チップ抵抗			01
-0111	**RD357100**	Carbon Resistor (chip)	10.0K 63M J RECT.	チップ抵抗			01
R0112	**RD355220**	Carbon Resistor (chip)	220.0 63M J RECT.	チップ抵抗			01
R0113	**RD355220**	Carbon Resistor (chip)	220.0 63M J RECT.	チップ抵抗			01
R0114	**RD356100**	Carbon Resistor (chip)	1.0K 63M J RECT.	チップ抵抗			01
R0115	**RD356100**	Carbon Resistor (chip)	1.0K 63M J RECT.	チップ抵抗			01
R0116	**RD357100**	Carbon Resistor (chip)	10.0K 63M J RECT.	チップ抵抗			01
R0117	**RD357220**	Carbon Resistor (chip)	22.0K 63M J RECT.	チップ抵抗			01
-0120	**RD357220**	Carbon Resistor (chip)	22.0K 63M J RECT.	チップ抵抗			01
R0121	**RD356150**	Carbon Resistor (chip)	1.5K 63M J RECT.	チップ抵抗			01
R0122	**RD356150**	Carbon Resistor (chip)	1.5K 63M J RECT.	チップ抵抗			01
R0123	**RD356330**	Carbon Resistor (chip)	3.3K 63M J RECT.	チップ抵抗			01
R0124	**RD358100**	Carbon Resistor (chip)	100.0K 63M J RECT.	チップ抵抗			01
R0125	**RD355220**	Carbon Resistor (chip)	220.0 63M J RECT.	チップ抵抗			01
-0130	**RD355220**	Carbon Resistor (chip)	220.0 63M J RECT.	チップ抵抗			01
R0136	**RD357470**	Carbon Resistor (chip)	47.0K 63M J RECT.	チップ抵抗			01
R0137	**RD357470**	Carbon Resistor (chip)	47.0K 63M J RECT.	チップ抵抗			01
R0138	**RD354330**	Carbon Resistor (chip)	33.0 63M J RECT.	チップ抵抗			01
-0140	**RD354330**	Carbon Resistor (chip)	33.0 63M J RECT.	チップ抵抗			01
R0200	**RD355220**	Carbon Resistor (chip)	220.0 63M J RECT.	チップ抵抗			01
R0201	**RD355220**	Carbon Resistor (chip)	220.0 63M J RECT.	チップ抵抗			01
R0202	**RD358470**	Carbon Resistor (chip)	470.0K 63M J RECT.	チップ抵抗			01
R0203	**RD355330**	Carbon Resistor (chip)	330.0 63M J RECT.	チップ抵抗			01
R0204	**RD353470**	Carbon Resistor (chip)	4.7 63M J RECT.	チップ抵抗			01

※: New Parts

RANK: Japan only

	REF NO.	PART NO.	DESCRIPTION		部品名	REMARKS	QTY	RANK
	R0300	**RD354100**	Carbon Resistor (chip)	10.0 63M J RECT.	チップ抵抗			01
	R0301	**RD354100**	Carbon Resistor (chip)	10.0 63M J RECT.	チップ抵抗			01
	RA001	**RE044680**	Resistor Array	68X4	抵抗アレイ			01
	-007	**RE044680**	Resistor Array	68X4	抵抗アレイ			01
	RA008	**RE046180**	Resistor Array	1.8KX4	抵抗アレイ			01
	-012	**RE046180**	Resistor Array	1.8KX4	抵抗アレイ			01
*	RA013	**RE046390**	Resistor Array	3.9KX4	抵抗アレイ			
*	-017	**RE046390**	Resistor Array	3.9KX4	抵抗アレイ			
	TR001	**VV556400**	Transistor	2SC2412K Q,R,S TP	トランジスタ			01
	-004	**VV556400**	Transistor	2SC2412K Q,R,S TP	トランジスタ			01
	X0001	**VV335600**	Quartz Crystal Unit	33.8688MHz DSO751S	水晶発振器			06
	X0002	**V3835100**	Ceramic Resonator	7MHz EFOS7004E5	セラミック振動子			01
	X0003	**VR870700**	Quartz Crystal Unit	10MHz SMD-49	水晶振動子			04
	ZD001	**VU171800**	Zener Diode	UDZS4.7BTE-17 4.7V	ツェナーダイオード			01
		V5425800	Circuit Board Assembly	JACK (HP1,2,VR1-3)	JACKシート集成	(XY433D0)		09
		--	Circuit Board	HP1	HP1シート	(V542670,V542580,XY433D0)		
		--	Circuit Board	HP2	HP2シート	(V542680,V542580,XY433D0)		
		--	Circuit Board	VR1	VR1シート	(V542640,V542580,XY433D0)		
		--	Circuit Board	VR2	VR2シート	(V542650,V542580,XY433D0)		
		--	Circuit Board	VR3	VR3シート	(V542660,V542580,XY433D0)		
	1	**--**	Connector Assembly	HP1 4P	HP1束線	(V543590)		
	2	**--**	Connector Assembly	HP2 5P	HP2束線	(V543600)		
	3	**--**	Connector Assembly	VR2 3P	VR2束線	(V543530)		
	CN001	**VI878200**	Cable Holder	51048 4P TE	ケーブルホルダー			01
	CN002	**VI878300**	Cable Holder	51048 5P TE	ケーブルホルダー			01
	CN003	**VZ612000**	Connector, FFC	52089SHIRI-ZU 5PSE	FFCコネクター			01
	CN004	**VI878100**	Cable Holder	51048 3P TE	ケーブルホルダー			01
	CN005	**VZ612000**	Connector, FFC	52089SHIRI-ZU 5PSE	FFCコネクター			01
	JK001	**LB101870**	Phone Jack	YKB21-5006	ホーンコネクタ	PHONES		03
	JK002	**LB101870**	Phone Jack	YKB21-5006	ホーンコネクタ	PHONES		03
	VR001	**VH335400**	Slide Variable Resistor	B 10K RS30111A9	スライドVR	LEFT/MASTER VOLUME		03
	VR002	**VH335400**	Slide Variable Resistor	B 10K RS30111A9	スライドVR	ACCOMP VOLUME		03
	VR003	**VH335400**	Slide Variable Resistor	B 10K RS30111A9	スライドVR	RIGHT VOLUME		03
		VU648200	Circuit Board	MK-H	MK－Hシート	(VU64800)(XR565C0)		09
	2	**VB941200**	Diode	1SS133,1SS176 TE	ダイオード	A#3-C6		01
	5	**VK025600**	Wire Trap	52147 12P TE	ワイヤートラップ			01
	6	**VK024900**	Wire Trap	52147 5P TE	ワイヤートラップ			01
		VU648100	Circuit Board	MK-L	MK－Lシート	(VU64790)(XR564C0)		09
	2	**VB941200**	Diode	1SS133,1SS176 TE	ダイオード	C1-A3		01
	5	**VK025600**	Wire Trap	52147 12P TE	ワイヤートラップ			01
	6	**VK025100**	Wire Trap	52147 7P TE	ワイヤートラップ			01
*		**WF554700**	Circuit Board	MKS5F2 (KBS)	MKS5F2シート	(WF55490)(X6711A0)		
		--	Vibration-proof Tape	10X64X0.5	防振テープ	(VK34680)		
		--	Jumper Wire	0.55	ジャンパー線	(VA07890)		
	C1	**US061220**	Ceramic Capacitor-CH(chip)	22P 50V J RECT.	チップセラ（CH）			01
	-3	**US061220**	Ceramic Capacitor-CH(chip)	22P 50V J RECT.	チップセラ（CH）			01
	C4	**UR828100**	Electrolytic Cap.	100.00 10.0V RX TP	ケミコン			01
	C5	**US145100**	Ceramic Capacitor-F (chip)	0.1000 25V Z RECT.	チップセラ（F）			01
	C6	**US062100**	Ceramic Capacitor-SL(chip)	100P 50V J RECT.	チップセラ（SL）			01
	-29	**US062100**	Ceramic Capacitor-SL(chip)	100P 50V J RECT.	チップセラ（SL）			01
	CL1	**V6781400**	Ceramic Resonator	5.00MHz EFOEC5004T4Q	セラミック振動子			01
	CN1	**VF728300**	Wire Trap	52147 6P TE	ワイヤートラップ			01
	CN2	**VK025600**	Wire Trap	52147 12P TE	ワイヤートラップ			01
	CN3	**VK025100**	Wire Trap	52147 7P TE	ワイヤートラップ			01
	CN4	**VK024900**	Wire Trap	52147 5P TE	ワイヤートラップ			01
	IC1	**XZ560100**	IC	UPD789022GB-A15-8E	IC	CPU KBS		04
	R1	**HF456470**	Carbon Resistor	4.7K 1/4 J AX TP	カーボン抵抗			01
	R1	**V2550000**	Carbon Resistor	4.7K 1/6 J 26TP	カーボン抵抗			
	R2	**HF456470**	Carbon Resistor	4.7K 1/4 J AX TP	カーボン抵抗			01
	R2	**V2550000**	Carbon Resistor	4.7K 1/6 J 26TP	カーボン抵抗			
	R3	**HF457470**	Carbon Resistor	47.0K 1/4 J AX TP	カーボン抵抗			01
	R3	**V2551200**	Carbon Resistor	47.0K 1/6J 26TP	カーボン抵抗			
	R4	**HF754470**	Carbon Resistor	47.0 1/4 J AX TP	カーボン抵抗			01
	R4	**V2547600**	Carbon Resistor	47.0 1/6J 26TP	カーボン抵抗			
	RA1	**VH373200**	Resistor Array	RGLE12X473J	抵抗アレイ			01

*: New Parts

RANK: Japan only

REF NO.	PART NO.	DESCRIPTION		部品名	REMARKS	QTY	RANK
	V6277700	Circuit Board Assembly	PNL (PN2,PN4)	**ＰＮＬシート集成**	(X7475A0)		11
	--	Circuit Board	PN2	**ＰＮ２シート**	(V627790,V627770,X7475A0)		
	--	Circuit Board	PN4	**ＰＮ４シート**	(V627810,V627770,X7475A0)		
C0003	**UB445100**	Monolithic Ceramic Cap.	F 0.100 16V Z RECT	**チップ積層セラコン**			01
CN004	**V5525500**	Connector, FFC	52207 4P SE	**ＦＦＣコネクター**			01
CN005	**V5525500**	Connector, FFC	52207 4P SE	**ＦＦＣコネクター**			01
CN014	**VT006000**	Connector, FFC	52207 5P SE	**ＦＦＣコネクター**			02
CN100	**V6478900**	Connector, FFC/FPC	52808 26P TE	**ＦＦＣ／ＦＰＣコネクター**			01
D0001	**VB493900**	Diode	MA2R22100R TP	**ダイオード**			01
-0021	**VB493900**	Diode	MA2R22100R TP	**ダイオード**			01
D0001	**VV925900**	Diode	RLS-73 TE-11 TP	**ダイオード**			01
-0021	**VV925900**	Diode	RLS-73 TE-11 TP	**ダイオード**			01
LD001	**V5559600**	LED (chip) Red	BR1111R-TR	**チップＬＥＤ**	LEFT SPEAKER		01
LD002	**V5559600**	LED (chip) Red	BR1111R-TR	**チップＬＥＤ**	ENTER		01
LD003	**V5559600**	LED (chip) Red	BR1111R-TR	**チップＬＥＤ**	NORMAL (MODE)		01
LD004	**V5559600**	LED (chip) Red	BR1111R-TR	**チップＬＥＤ**	SPLIT (MODE)		01
LD005	**V5559600**	LED (chip) Red	BR1111R-TR	**チップＬＥＤ**	ENSEMBLE (MODE)		01
LD006	**V5559600**	LED (chip) Red	BR1111R-TR	**チップＬＥＤ**	SINGLE (ACCOMP)		01
LD007	**V5559600**	LED (chip) Red	BR1111R-TR	**チップＬＥＤ**	FINGERED (ACCOMP)		01
LD008	**V5559600**	LED (chip) Red	BR1111R-TR	**チップＬＥＤ**	METRONOME		01
LD009	**V5559600**	LED (chip) Red	BR1111R-TR	**チップＬＥＤ**	INTRO (ACCOMPANIMENT)		01
LD010	**VQ323900**	LED Display	51S	**ＬＥＤディスプレイ**			05
LD011	**V5559600**	LED (chip) Red	BR1111R-TR	**チップＬＥＤ**	TOUCH		01
LD012	**V5559600**	LED (chip) Red	BR1111R-TR	**チップＬＥＤ**	PITCH ▲		01
LD013	**V5559600**	LED (chip) Red	BR1111R-TR	**チップＬＥＤ**	MAIN (ACCOMPANIMENT)		01
LD014	**V5559600**	LED (chip) Red	BR1111R-TR	**チップＬＥＤ**	MELODY REC (SONG)		01
LD015	**V5559600**	LED (chip) Red	BR1111R-TR	**チップＬＥＤ**	ACCOMP REC (SONG)		01
LD016	**V5559600**	LED (chip) Red	BR1111R-TR	**チップＬＥＤ**	PLAY (SONG)		01
LD017	**V5559600**	LED (chip) Red	BR1111R-TR	**チップＬＥＤ**	ENDING (ACCOMPANIMENT)		01
R0002	**RD256100**	Carbon Resistor (chip)	1.0K 0.1 J RECT.	**チップ抵抗**			01
	V6277600	Circuit Board Assembly	PNR (PN1,PN3)	**ＰＮＲシート集成**	(X7474A0)		17
	--	Circuit Board	PN1	**ＰＮ１シート**	(V627780,V627760,X7474A0)		
	--	Circuit Board	PN3	**ＰＮ３シート**	(V627800,V627760,X7474A0)		
C0001	**UF128470**	Electrolytic Cap. (chip)	470 10V UUR1A4	**チップケミコン**			02
C0002	**UB445100**	Monolithic Ceramic Cap.	F 0.100 16V Z RECT	**チップ積層セラコン**			01
C0004	**UF128470**	Electrolytic Cap. (chip)	470 10V UUR1A4	**チップケミコン**			02
C0005	**UB445100**	Monolithic Ceramic Cap.	F 0.100 16V Z RECT	**チップ積層セラコン**			01
C0006	**UB013100**	Monolithic Ceramic Cap.	1000P 50V K RECT.	**チップ積層セラコン**			01
C0007	**UB445100**	Monolithic Ceramic Cap.	F 0.100 16V Z RECT	**チップ積層セラコン**			01
C0008	**UB445100**	Monolithic Ceramic Cap.	F 0.100 16V Z RECT	**チップ積層セラコン**			01
C0100	**UB013100**	Monolithic Ceramic Cap.	1000P 50V K RECT.	**チップ積層セラコン**			01
CN006	**V5525500**	Connector, FFC	52207 4P SE	**ＦＦＣコネクター**			01
CN007	**V5525500**	Connector, FFC	52207 4P SE	**ＦＦＣコネクター**			01
CN012	**V6478800**	Connector, FFC/FPC	52808 11P TE	**ＦＦＣ／ＦＰＣコネクター**			01
CN013	**VT006000**	Connector, FFC	52207 5P SE	**ＦＦＣコネクター**			02
CN101	**V6478900**	Connector, FFC/FPC	52808 26P TE	**ＦＦＣ／ＦＰＣコネクター**			01
D0022	**VB493900**	Diode	MA2R22100R TP	**ダイオード**			01
-0057	**VB493900**	Diode	MA2R22100R TP	**ダイオード**			01
D0022	**VV925900**	Diode	RLS-73 TE-11 TP	**ダイオード**			01
-0057	**VV925900**	Diode	RLS-73 TE-11 TP	**ダイオード**			01
IC001	**XS711200**	IC	MN101C027YB	**ＩＣ**	CPU		06
IC002	**XU862A00**	IC	TC74HCT244AF(EL,F)	**ＩＣ**	BUFFER		03
LD018	**V5559600**	LED (chip) Red	BR1111R-TR	**チップＬＥＤ**	50'S (STYLE)		01
LD019	**V5559600**	LED (chip) Red	BR1111R-TR	**チップＬＥＤ**	BALLAD (STYLE)		01
LD020	**V5559600**	LED (chip) Red	BR1111R-TR	**チップＬＥＤ**	COUNTRY (STYLE)		01
LD021	**V5559600**	LED (chip) Red	BR1111R-TR	**チップＬＥＤ**	CTRY RK (STYLE)		01
LD022	**V5559600**	LED (chip) Red	BR1111R-TR	**チップＬＥＤ**	LATIN RK (STYLE)		01
LD023	**V5559600**	LED (chip) Red	BR1111R-TR	**チップＬＥＤ**	MARCH (STYLE)		01
LD024	**V5559600**	LED (chip) Red	BR1111R-TR	**チップＬＥＤ**	POP (STYLE)		01
LD025	**V5559600**	LED (chip) Red	BR1111R-TR	**チップＬＥＤ**	REGGAE (STYLE)		01
LD026	**V5559600**	LED (chip) Red	BR1111R-TR	**チップＬＥＤ**	ROCK (STYLE)		01
LD027	**V5559600**	LED (chip) Red	BR1111R-TR	**チップＬＥＤ**	SALSA (STYLE)		01
LD028	**V5559600**	LED (chip) Red	BR1111R-TR	**チップＬＥＤ**	SAMBA (STYLE)		01
LD029	**V5559600**	LED (chip) Red	BR1111R-TR	**チップＬＥＤ**	SWING (STYLE)		01
LD030	**V5559600**	LED (chip) Red	BR1111R-TR	**チップＬＥＤ**	2 BEAT (STYLE)		01
LD031	**V5559600**	LED (chip) Red	BR1111R-TR	**チップＬＥＤ**	3 BEAT (STYLE)		01
LD032	**V5559600**	LED (chip) Red	BR1111R-TR	**チップＬＥＤ**	4 BEAT (STYLE)		01
LD033	**V5559600**	LED (chip) Red	BR1111R-TR	**チップＬＥＤ**	ASSIGN (STYLE)		01
LD034	**V5559600**	LED (chip) Red	BR1111R-TR	**チップＬＥＤ**	PIANO (VOICE)		01

※: New Parts

RANK: Japan only

REF NO.	PART NO.	DESCRIPTION		部品名	REMARKS	QTY	RANK
LD035	**V5559600**	LED (chip) Red	BR1111R-TR	チップLED	E.PIANO (VOICE)		01
LD036	**V5559600**	LED (chip) Red	BR1111R-TR	チップLED	HARPSI. (VOICE)		01
LD037	**V5559600**	LED (chip) Red	BR1111R-TR	チップLED	ORGAN (VOICE)		01
LD038	**VQ323900**	LED Display	51S	LEDディスプレイ			05
LD039	**V5559600**	LED (chip) Red	BR1111R-TR	チップLED	MARIMBA (VOICE)		01
LD040	**V5559600**	LED (chip) Red	BR1111R-TR	チップLED	TRUMPET (VOICE)		01
LD041	**V5559600**	LED (chip) Red	BR1111R-TR	チップLED	CLARINET (VOICE)		01
LD042	**V5559600**	LED (chip) Red	BR1111R-TR	チップLED	SAX (VOICE)		01
LD043	**V5559600**	LED (chip) Red	BR1111R-TR	チップLED	LEFT (VOICE)		01
LD044	**V5559600**	LED (chip) Red	BR1111R-TR	チップLED	GUITAR (VOICE)		01
LD045	**V5559600**	LED (chip) Red	BR1111R-TR	チップLED	RK GUITAR (VOICE)		01
LD046	**V5559600**	LED (chip) Red	BR1111R-TR	チップLED	STRINGS (VOICE)		01
LD047	**V5559600**	LED (chip) Red	BR1111R-TR	チップLED	BASS (VOICE)		01
LD048	**V5559600**	LED (chip) Red	BR1111R-TR	チップLED	RIGHT (VOICE)		01
LD049	**V5559600**	LED (chip) Red	BR1111R-TR	チップLED	SYNTH (VOICE)		01
LD050	**V5559600**	LED (chip) Red	BR1111R-TR	チップLED	SYNTH PAD (VOICE)		01
LD051	**V5559600**	LED (chip) Red	BR1111R-TR	チップLED	KBD PERC (VOICE)		01
LD052	**V5559600**	LED (chip) Red	BR1111R-TR	チップLED	ASSIGN (VOICE)		01
LD053	**V5559600**	LED (chip) Red	BR1111R-TR	チップLED	RIGHT SPEAKER		01
LD054	**V5559600**	LED (chip) Red	BR1111R-TR	チップLED	ENTER		01
R0001	**RD256100**	Carbon Resistor (chip)	1.0K 0.1 J RECT.	チップ抵抗			01
R0003	**RD257100**	Carbon Resistor (chip)	10.0K 0.1 J RECT.	チップ抵抗			01
-0010	**RD257100**	Carbon Resistor (chip)	10.0K 0.1 J RECT.	チップ抵抗			01
R0011	**RD255100**	Carbon Resistor (chip)	100.0 0.1 J RECT.	チップ抵抗			01
-0040	**RD255100**	Carbon Resistor (chip)	100.0 0.1 J RECT.	チップ抵抗			01
R0041	**RD257470**	Carbon Resistor (chip)	47.0K 0.1 J RECT.	チップ抵抗			01
R0042	**RD257470**	Carbon Resistor (chip)	47.0K 0.1 J RECT.	チップ抵抗			01
R0043	**RD153470**	Carbon Resistor (chip)	4.7 1/4 J TP	チップ抵抗			01
-0046	**RD153470**	Carbon Resistor (chip)	4.7 1/4 J TP	チップ抵抗			01
R0100	**RD256270**	Carbon Resistor (chip)	2.7K 0.1 J RECT.	チップ抵抗			01
TA001	**V8566600**	Transistor Array	TD62785FG-(5,EL)	トランジスタアレイ			05
TA001	**VT943400**	Transistor Array	TD62785F-TP1	トランジスタアレイ			04
TR001	**V5005800**	Digital Transistor	FMG11A	デジタルトランジスタ			01
-008	**V5005800**	Digital Transistor	FMG11A	デジタルトランジスタ			01
X0001	**VY681200**	Ceramic Resonator	CSTCC8M00G53-R0	セラミック発振子			01
	XT278A00	Speaker	12.0cm 4 ohm 8W	スピーカー		2	06

※: New Parts

RANK: Japan only

■ MIE-3XG BLOCK DIAGRAM

MIE-3XG

KEYBOARD 61Key (16M)

MK-L (C1~A3) (12P) (7P) — CN2 (12P) CN3 (7P)

MK-H (A#3~C6) (12P) (5P) — CN4 (5P)

MKS5F2

+5D 17,38 — CPU KBS IC1 (44P) — /IC, REQ, DA, CLK — CN1 (6P) — CN2 (6P)

DM

SPL-MUTE(PE14), SPR-MUTE(PE15), LINE-MUTE(PE13),SPLIT-ON(PE12), /SPMUTE(PE11),DACMUTE(PE10), FLASH-WE(PE2),/HPMUTE(PE9), /PN-IC(PE8)

AND IC16 (14P): /SPMUTE, /MUTE-F → /SPMUTE2; /HPMUTE → /HPMUTE2

CPU SH7042 Mode : 2 — IC9 (112P)

Port OUT 100; 21,37,65,103; AVCC; VCC; 84; 89

ACMP-VOL 91; /PN-IRQ 43; /MERGE-IRQ 42; MIDIOUT 47; MIDIIN 48; /LSIIC 50; /MKACK 51; MKDATA 49; MKCLK; +5D

/CASH 26; /CASL 25; /RD 34; /SIOCS 41; /CS3 44

LOGIC IC27,28 (14P) — /OE

DRAM 16M IC4 (44P) — 30; 1,6,22 VCC; +3.3D

PROGRAM ROM 16M FLASH IC2 (48P) — 37 VCC

BUFFER RA8~17 5V→3.3V

DECODER IC15 (16P) — /CS3, A12, A13 → /SWX1CS, /SWX2CS

SYSTEM RESET IC14 (4P) — +5D

P-Bus; /LSIIC

REGULATOR +3.3V: IC7 (3P) — +3.3D

DC-DC CONVERTER: IC3 (5P) — +5D; /MUTE-F

REGULATOR +5V: IC1 (3P)

+5A; DACMUTE; /LSIIC; SDATA

DAC 24 bit (20 bit) IC6 (28P) — 18,28 23 24; 12,13 16,17; 27

DAC 24 bit (20 bit) IC17 (28P) — 18,28 24 23; 12,13 16,17; 27

LPF IC10 (8P) — 2,3 5,6 1 7

LPF IC20 (8P) — 2,3 5,6 1 7 — fc=75kHz

SWX00B MASTER IC5 (168P) — /LSIIC, /SWX1CS, SDATA; 35,119,133, 143,161; 7,49,61, 77,91,148

WAVE ROM 32M X 2 IC8,13 (44P) — 23

SWX00B SLAVE IC18 (168P) — /LSIIC, /SWX2CS; 35,119,133, 143,161; 7,49,61, 77,91,148

DRAM 4M IC11 (40P) — 1,6,20

S-Bus; C-Bus

SIO4 IC19 (48P) — VDD 19,43; /SIOCS 11; /LSIIC 30; /PN-IRQ → /IRQ0 4; /MERGE-IRQ → /IRQ1 5; Tx0 15; Rx0 14; Rx1 16

SPL-MUTE, SPR-MUTE, LINE-MUTE, SPRIT-ON, /SPMUTE2, /HPMUTE2

CN1 (7P); CN2 (7P); CN1 (11P); CN7 (11P)

VR2 / VR1 / VR3

ACCOMP VOLUME VR2 — ACMP-VOL — CN3 (3P) CN4 (3P)

LEFT/ MASTER VOLUME VR1 — CN3 (5P)

RIGHT VOLUME VR3 — CN5 (5P)

PN1 (PNR1/2); PN3 (PNR2/2); PN2 (PNL1/2); PN4 (PNL2/2)

CN14 (5P) (PN2); CN13 (5P) (PN1)

CPU IC1 (64P)

+5D; AD0; AD1; Tx; Rx; /PN-IC; CN12 (11P); CN4 (11P)

TR ARRAY 8bit TA1 (18P)

TR1~8 16bit

PANEL SWITCH/LED SW1~57,LD1~54 — 8.8.8. 8.8.8. — 8bit

SW READ

AM

MIDIIN; MIDIOUT — CN6 (9P); CN4 (9P)

JK4 JK5 JK6 JK7

CN5 (8P); CN3 (8P) → SPL-MUTE, SPR-MUTE, LINE-MUTE, SPRIT-ON, /SPMUTE2, /HPMUTE2

IN OUT THRU MERGE IN — MIDI

REGULATOR +9V

IC5 (3P) — +9A

MIXER

SPLIT-ON; 9~11

IC14 (16P) — IC13 (9P) MIXER; IC11 (9P) MIXER; IC12 (9P) MIXER

IC15 (16P) — IC9 (14P); LINE-MUTE; LINE-L; LINE-R

SPL-MUTE; SPR-MUTE; SPL; SPR

IC10 (9P) MIXER — DAC1L, DAC1R → DAC1MIX; DAC2L, DAC2R → DAC2MIX

HP1L; HP1R; HP2L; HP2R

HPF / GRAPHIC EQUALIZER

HPF IC1 (9P); GRAPHIC EQUALIZER IC7 (20P) — fc=70Hz 12dB/oct; 3 elements

HPF IC2 (9P); GRAPHIC EQUALIZER IC8 (20P)

POWER AMP / HEADPHONE AMP

IC18 (18P) LA4705NA — +B; /SPMUTE2; 11,18; 15,17; 12,14 — CN7 (6P)

IC16 (10P) LA4262 — +B; /HPMUTE2; CN5 (4P); CN1 (4P)

IC17 (10P) LA4262 — +B; /HPMUTE2; CN6 (5P); CN2 (5P)

Speaker L; Speaker R

HP1; PHONES; JK1

HP2; PHONES; JK2

MIXER / MULTIPLEXER / ANALOG SWITCH

MIXER IC10~13 (9P)

MULTIPLEXER/ DEMULTIPLEXER IC14,15 (16P)

ANALOG SWITCH IC9 (14P)

TRANS FORMER / BUFFER AMP

TRANS FORMER T1,T2

BUFFER AMP IC4 (9P)

JK2 JK3

L R L R — AUDIO OUT AUDIO IN

POWER / I/O

DC IN 12V; JK1; L4 LINE FILTER; SW1; STANDBY; ON

AC Adaptor PA-5D or equivalent

28CA1-2000010494

(ENSEMBLE) : ①
(NORMAL) : ①
(A.B.C) : ①
(SPLIT) : ②

■ MIE-3XG BLOCK DIAGRAM

■MIE-3XG OVERALL CIRCUIT DIAGRAM 1/2 (DM, MK-H, MK-L, MKS5F2, VR2)

MIE-3XG

DM

VR2
ACCOMP VOLUME
RS301114900CB
28CC1-8815999 1

FLASH ROM 16M MAIN

TRANSCEIVER

DRAM 16M

TRANSCEIVER

OR

AND

OR

AND

NAND GATE

CPU
IC9
SH7042F

SYSTEM RESET

AND

DECODER

SIO4
(GATE ARRAY)

DC-DC CONVERTER

to AM-CN2

to PN1-CN12

to AM-CN3

Muting circuit

MASK ROM 32M WAVE1

MASK ROM 32M WAVE2

SWX00B
SWX00B
IC5
MASTER

SWX00B
SWX00B
IC18
SLAVE

REGULATOR +3.3V

DRAM 4M

Photo Coupler

Photo Coupler

to AM-CN4

MKS5F2

CPU
KB5
IC1
UPD78902GB-A15

28CC1-2000005516 1

DAC

OP AMP

DAC

OP AMP

REGULATOR +5V

to AM-CN1

28CC1-2000010496 2

MK-L (C1~A3)

VU648100

MK-H (A#3~C6)

VU648200

- μPC2933AT-E1 (X0638A00) REGULATOR +3.3V
  DM: IC007
  1: V in
  2: GND
  3: V out
- NJM78L05UA(XJ598A00) REGULATOR +5V
  DM: IC001
  1: OUTPUT
  2: GND
  3: INPUT
- SI-8050S(LF1103) (XT514A00) DC-DC CONVERTER
  DM: IC003
  1: V in
  2: SW out
  3: GND
  4: V os
  5: S.S
- SFPB-62V (VZ060500) DIODE
  DM: D0001
  1: ANODE
  2: CATHODE
- UDZS4.7B 4.7V (VU171800) ZENER DIODE
  DM: ZD001
  1: ANODE
  2: CATHODE
- RLS-73 TE-11 (VV925900) DIODE
  DM: D0002,0003
  1: ANODE
  2: CATHODE
- 2SC2412K(VV556400) TRANSISTOR
  DM: TR001~004
  1: EMITTER
  2: BASE
  3: COLLECTOR

{ セ }: Ceramic Capacitor
＊＊＊: Not installed

Note : See parts list for details of circuit board component parts.

MIE-3XG

■ MIE-3XG OVERALL CIRCUIT DIAGRAM 2/2 (AM, HP1, HP2, PN1, PN2, PN3, PN4, VR1, VR3)

AM

HPF

EQUALIZER

GRAPHIC EQUALIZER

GRAPHIC EQUALIZER

ANALOG SWITCH

MULTIPLEXER/ DEMULTIPLEXER

MULTIPLEXER/ DEMULTIPLEXER

ANALOG SWITCH

LINE AMP

MIXING AMP

POWER SUPPLY

REGULATOR +9V

POWER AMP 7W 2ch

POWER AMP 7W 2ch

HEADPHONE AMP1

HEADPHONE AMP2

POWER AMP 17W

POWER AMP

MIDI

MERGE IN

THRU

OUT

IN

DJACK

to DM-CN6

to DM-CN7

to DM-CN5

to DM-CN1

to DM-CN4

AUDIO IN L R

AUDIO OUT L R

DC IN 12V

STANDBY

ON

HP1

HP2

PHONES

PHONES

Speaker L

Speaker R

28CC1-8815999 /1

28CC1-8815999 /1

28CC1-8815998 /2

28CC1-8815997 /9

28CC1-8815998 /2

28CC1-8815998 /2

28CC1-8815999 /1

28CC1-8815999 /1

28CC1-8815998 /2

28CC1-8815998 /2

PN1 (PNR 1/2)

PN2 (PNL 1/2)

PN3 (PNR 2/2)

PN4 (PNL 2/2)

VR1 LEFT/MASTER VOLUME

VR3 RIGHT VOLUME

Transistor Array

BUFFER

IC1 MN101C027YB CPU

- BA09T (XU583A00) REGULATOR +9V
  AM: IC205
  1: INPUT 2: COMMON 3: OUTPUT
- DTC124ES (VF331200)
  DTC124ESA (WB039200) DIGITAL TRANSISTOR
  AM: TR001–004
  1: GND 2: OUT 3: IN
- FMG11A (V5005800) DIGITAL TRANSISTOR
  PN1: TR001–008
  R1: 2.2kΩ R2: 47kΩ
  1: DTr1 OUT 2: DTr2 OUT 3: DTr2 IN 4: GND 5: DTr1 IN
- RT1N241S-T112 (WD091600) DIGITAL TRANSISTOR
  AM: TR001–004
  1: EMITTER 2: COLLECTOR 3: BASE

X : Not installed

( ) : Ceramic Capacitor

( ) : Mylar Capacitor

( ) : Semiconductive Ceramic Capacitor

Note : See parts list for details of circuit board component parts.

■ WARNING

Components having special characteristics are marked ⚠ and must be replaced with parts having specification equal to those originally installed.

LED MATRIX

	L0	L1	L2	L3	L4	L5	L6	L7
D0	7SegL–A1	7SegL–B1	7SegL–C1	7SegL–D1	7SegL–E1	7SegL–F1	7SegL–G1	7SegL–DP1
D1	7SegL–A2	7SegL–B2	7SegL–C2	7SegL–D2	7SegL–E2	7SegL–F2	7SegL–G2	7SegL–DP2
D2	7SegL–A3	7SegL–B3	7SegL–C3	7SegL–D3	7SegL–E3	7SegL–F3	7SegL–G3	7SegL–DP3
D3	7SegR–A1	7SegR–B1	7SegR–C1	7SegR–D1	7SegR–E1	7SegR–F1	7SegR–G1	7SegR–DP1
D4	7SegR–A2	7SegR–B2	7SegR–C2	7SegR–D2	7SegR–E2	7SegR–F2	7SegR–G2	7SegR–DP2
D5	7SegR–A3	7SegR–B3	7SegR–C3	7SegR–D3	7SegR–E3	7SegR–F3	7SegR–G3	7SegR–DP3
D6	———	———	———	———	———	———	———	———
D7	———	———	———	———	———	———	———	———

	L8	L9	L10	L11	L12	L13	L14
D0	PIANO	MARIMBA	GUITAR	SYNTH	NORMAL	SPLIT	RIGHT
D1	EL PIANO	TRUMPET	RK GUITAR	SYNTHPAD	SINGLE	FINGERED	LEFT
D2	HARPSCHD	CLARINET	STRINGS	KBD PERC	ENSEMBLE	PLAYBACK	———
D3	ORGAN	SAX	BASS	ASSIGN–R	MELODY–REC	ENDING	———
D4	50'S	LATIN RK	ROCK	2BEAT	ACMP–REC	METRONOME	———
D5	BALLAD	MARCH	SALSA	3BEAT	TOUCH–RES	INTRO	———
D6	COUNTRY	POP	SAMBA	4BEAT	PITCH	ENTER–L	ENTER–R
D7	CTRY RK	REGGAE	SWING	ASSIGN–L	MAIN	LEFT SP	RIGHT SP

* **LEDs in the dotted frame do not light simultaneously.**

SW MATRIX

	S11	S12	S13	S14	S15	S16	S17	S18
D0	LEFT SP	METRONOME	MELODY–REC	50'S	ROCK	PIANO	GUITAR	LEFT
D1	INTRO	TEMPO–UP	ACMP–REC	BALLAD	SALSA	EL PIANO	RK GUITAR	RIGHT
D2	NORMAL	TEMPO–DOWN	PLAYBACK	COUNTRY	SAMBA	HARPSCHD	STRINGS	RIGHT SP
D3	SPLIT	TOUCH–RES	ENDING	CTRY RK	SWING	ORGAN	BASS	———
D4	ENSEMBLE	PITCH–UP	STOP	LATIN RK	2BEAT	MARIMBA	SYNTH	———
D5	A.B.C.	PITCH–DOWN	———	MARCH	3BEAT	TRUMPET	SYNTHPAD	———
D6	ENTER–L	MAIN	———	POP	4BEAT	CLARINET	KBD PERC	ENTER–R
D7	S–START	START	———	REGGAE	ASSIGN–L	SAX	ASSIGN–R	———