# DIGITAL KEYBOARD

# KBP-500
# KBP-300

# SERVICE MANUAL



KBP-500



KBP-300

## CONTENTS


SPECIFICATIONS....3
PANEL LAYOUT....4
CIRCUIT BOARD LAYOUT & WIRING....6
DISASSEMBLY PROCEDURE....8
LSI PIN DESCRIPTION....19
IC BLOCK DIAGRAM....22
CIRCUIT BOARDS....23
TEST PROGRAM....34
INITIALIZATION....37
MIDI IMPLEMENTATION CHART....38
MIDI DATA FORMAT....39
PARTS LIST
BLOCK DIAGRAM
OVERALL CIRCUIT DIAGRAM



CL 001806

YAMAHA
HAMAMATSU, JAPAN



Copyright (c) Yamaha Corporation. All rights reserved. PDF KM DH '08.04

**IMPORTANT NOTICE**

This manual has been provided for the use of authorized Yamaha Retailers and their service personnel. It has been assumed that basic service procedures inherent to the industry, and more specifically Yamaha Products, are already known and understood by the users, and have therefore not been restated.

**WARNING :** Failure to follow appropriate service and safety procedures when servicing this product may result in personal injury, destruction of expensive components and failure of the product to perform as specified. For these reasons, we advise all Yamaha product owners that all service required should be performed by an authorized Yamaha Retailer or the appointed service representative.

**IMPORTANT :** This presentation or sale of this manual to any individual or firm does not constitute authorization certification, recognition of any applicable technical capabilities, or establish a principal-agent relationship of any form.

The data provided is belived to be accurate and applicable to the unit(s) indicated on the cover. The research engineering, and service departments of Yamaha are continually striving to improve Yamaha products. Modifications are, therefore, inevitable and changes in specification are subject to change without notice or obligation to retrofit. Should any discrepancy appear to exist, please contact the distributor's Service Division.

**WARNING :** Static discharges can destroy expensive components. Discharge any static electricity your body may have accumulated by grounding yourself to the ground bus in the unit (heavy gauge black wires connect to this bus.)

**IMPORTANT :** Turn the unit OFF during disassembly and parts replacement. Recheck all work before you apply power to the unit.

**WARNING:** This product contains chemicals known to the State of California to cause cancer, or birth defects or other reproductive harm.

DO NOT PLACE SOLDER, ELECTRICAL/ELECTRONIC OR PLASTIC COMPONENTS IN YOUR MOUTH FOR ANY REASON WHAT SO EVER!

Avoid prolonged, unprotected contact between solder and your skin! When soldering, do not inhale solder fumes or expose eyes to solder/flux vapor!

If you come in contact with solder or components located inside the enclosure of this product, wash your hands before handling food.

# WARNING

Components having special characteristics are marked ⚠ and must be replaced with parts having specification equal to those originally installed.

# SAVING DATA

### Saving and backing up your data

- Data in the instrument's internal memory can be lost due to operational errors or malfunction.
  Be sure to save any important data to external media via a computer connected to the instrument.

# SPECIFICATIONS

**键盘**
- 88 个 GHS 键 (A-1 – C7)，具备力度感响应功能。

**显示器**
- 大屏幕多功能 LCD 显示器（背光型）

**设定**
- 待机 / 开
- 主音量：最小－最大

**面板控制**
- 伴奏音量上和下、速度上和下、伴奏、伴奏类别、功能、+/ 是、-/ 否、力度、混响、延音、示范乐曲、双音色、分割、中国音色类别、音色、音色类别、 A-B 反复、和弦伴奏开 / 关、同步结束、暂停、同步起动、前奏 / 尾声、起动 / 停止、快退、快进、主奏 / 自动插入 A、主奏 / 自动插入 B、注册存储、音库、 [1] – [4]、乐曲编号、[ 录音 ]、[1] – [5]（KBP-500）、[1] – [2]（KBP-300）、[A]

**音色**
- KBP-500：527 种音色
  （包括 361 组 XG 音色 +12 组打击乐音色 +3 组 SE 音色）
- KBP-300：339 种音色
  （包括 192 组 XG 音色 +12 组打击乐音色 +3 组 SE 音色）
- 最大发音数：32

**伴奏**
- KBP-500：163 种伴奏
- KBP-300：112 种伴奏
- 伴奏控制：和弦伴奏开／关、同步结束、同步起动、起动／停止、前奏／尾声、主奏／自动插入 A、主奏／自动插入 B
- 伴奏音量

**功能按钮**

**效果**
- 混响：9 种类型
- 叠奏：4 种类型
- 和声：26 种类型

**示范乐曲**
- KBP-500：60 首乐曲
- KBP-300：10 首乐曲

**乐曲**
- 5 首乐曲 + 闪存
- 乐曲音量

**录音**
- 乐曲
  用户乐曲：5 首乐曲
  录音音轨：1、2、3、4、5、A (KBP-500)
  1、2、A (KBP-300)
- 乐曲清除、音轨清除

**注册存储**
- KBP-500：8 个音库 x 4 个注册存储
- KBP-300：4 个音库 x 4 个注册存储

**滑音轮**
- 音域 ± 1 八度

**滑音**
- 滑音时间：00 – 127

**MIDI**
- 时钟
- 初始值发送
- 本机开／关

**附属插口**
- 耳机／输出、直流输入 12V、 MIDI 输入／输出、延音踏板、表现踏板、踏板单元

**放大器**
- 6.0 W x 2

**扬声器**
- KBP-500：12cm x 2 + 3cm x 2
- KBP-300：12cm x 2

**功率消耗**
- 20 W

**电源**
- 适配器：Yamaha PA-5D AC 电源适配器

**尺寸（宽×深×高）**
- 1398 x 457 x 157 mm
  带键盘支架：1405 x 485 x 778 mm

**重量**
- 17 kg
  KBP-500（带键盘支架和 LP-7 踏板单元）：31 kg
  KBP-300（带键盘支架）：25 kg

**随机附件**
- 谱架
- AC 电源适配器
- 使用说明书
- 保证书
- 键盘支架
- LP-7 踏板单元（KBP-500）
- FC5 延音踏板（KBP-300）

---

**可选附件**
- USB MIDI 接口：UX16
- 延音踏板：FC4、 FC5
- 表现踏板：EP-1
- 踏板单元：LP-7（仅 KBP-300）

# ■ PANEL LAYOUT

• **Front Panel**

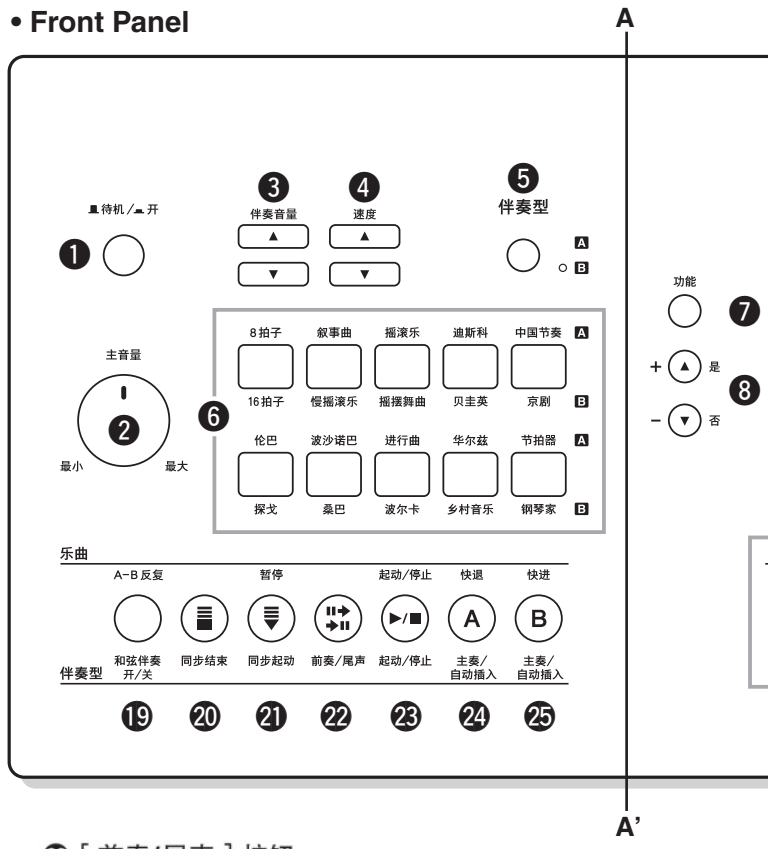


## ■前面板

❶ [ 待机/开 ] 开关
❷ [ 主音量 ] 旋钮
❸ 伴奏音量 [ ▲ ] 和 [ ▼ ] 按钮
❹ 速度 [ ▲ ] 和 [ ▼ ] 按钮
❺ [ 伴奏型 ] 按钮
❻ 伴奏类别按钮
❼ [ 功能 ] 按钮
❽ [ +/是 ]、[ -/否 ] 按钮
❾ LCD显示器
❿ [ 力度 ] 按钮
⓫ [ 混响 ] 按钮
⓬ [ 延音 ] 按钮
⓭ [示范乐曲]按钮
⓮ [ 音色 ] 按钮
⓯ [ 双音色 ] 按钮
⓰ [ 音色分割 ] 按钮
⓱ 中国音色类别按钮
⓲ 音色类别按钮
⓳ [ A-B反复 ] 按钮
[ 和弦伴奏开/关 ] 按钮
⓴ [ 同步结束 ] 按钮
㉑ [ 暂停 ] 按钮
[ 同步起动 ] 按钮
㉒ [ 前奏/尾声 ] 按钮
㉓ [起动/停止] 按钮
㉔ [ 快退 ] 按钮
[ 主奏/自动插入A ] 按钮
㉕ [ 快进 ] 按钮
[ 主奏/自动插入B ] 按钮
㉖ 注册存储 [ 存储 ]、[ 音库 ]、
[1]-[4] 按钮
㉗ 乐曲存储 [ 乐曲编号 ]、[ 录音 ]、
[1]-[5]、[A]按钮（KBP-500）
乐曲存储 [ 乐曲编号 ]、[ 录音 ]、
[1]、[2]、[A]按钮（KBP-300）
㉘ 打击乐器组图标
㉙ [PORTAMENTO]（滑音）按钮
㉚ [PITCH BEND]（滑音）轮

## ■后面板

㉛ MIDI输入/输出端口
㉜ 延音踏板插口
㉝ 表现踏板插口
㉞ 耳机/输出插口
㉟ 直流输入12V插口
㊱ 脚踏板组件插口

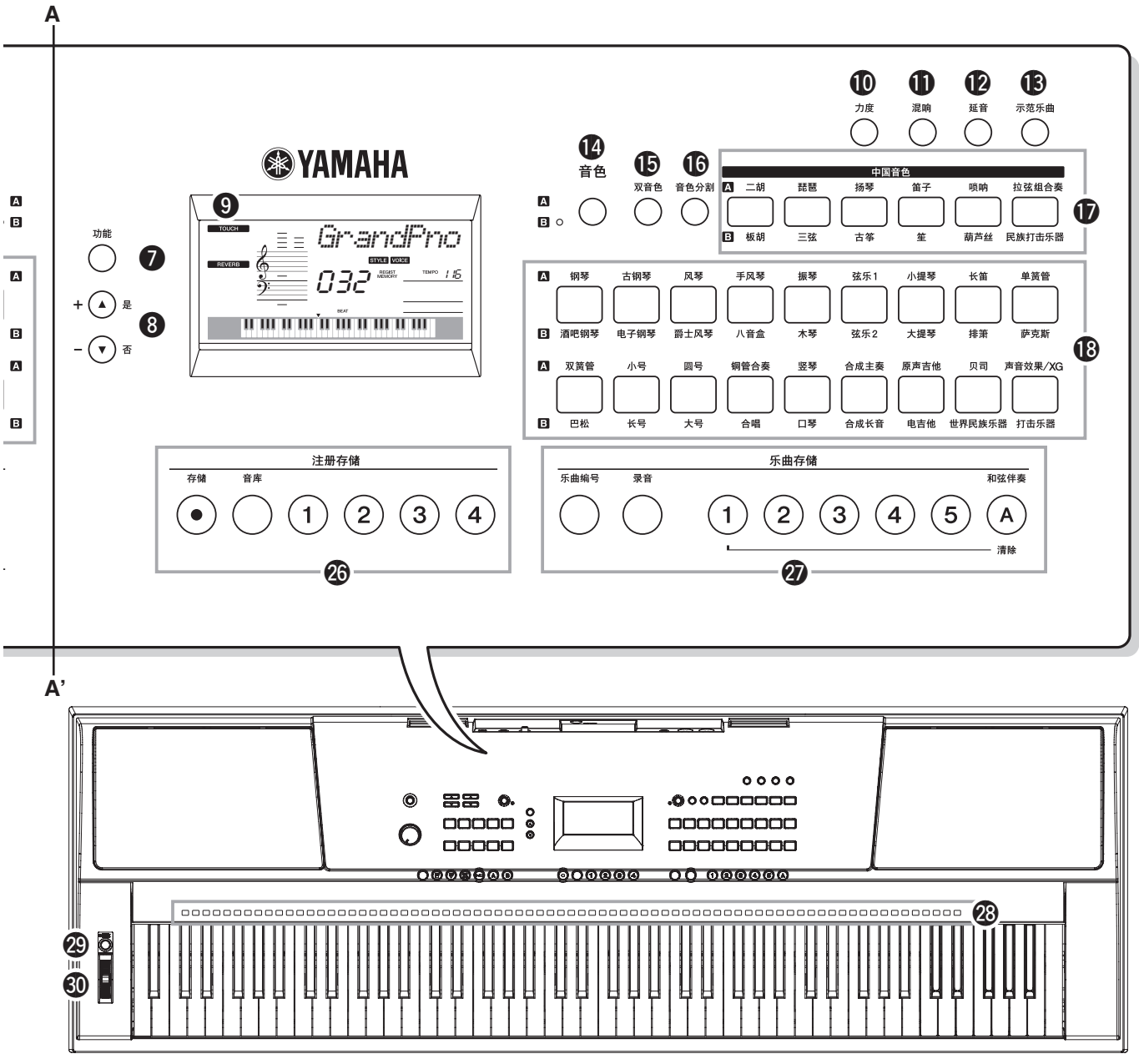




## • Rear Panel

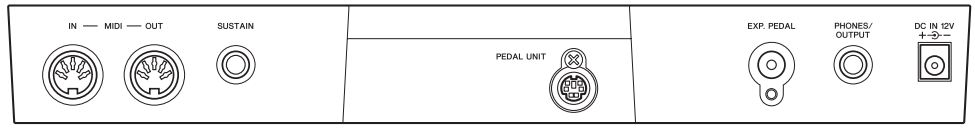


输入 — MIDI — 输出 延音踏板 脚踏板组件 表现踏板 耳机／输出 直流输入 12V

# CIRCUIT BOARD LAYOUT & WIRING

• **Lower case assembly**

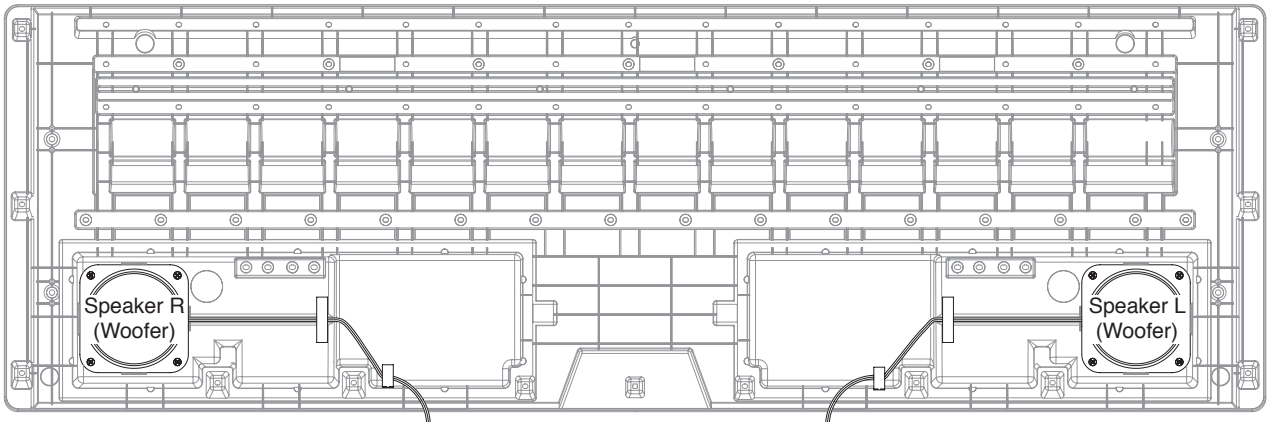


• **Upper case side**

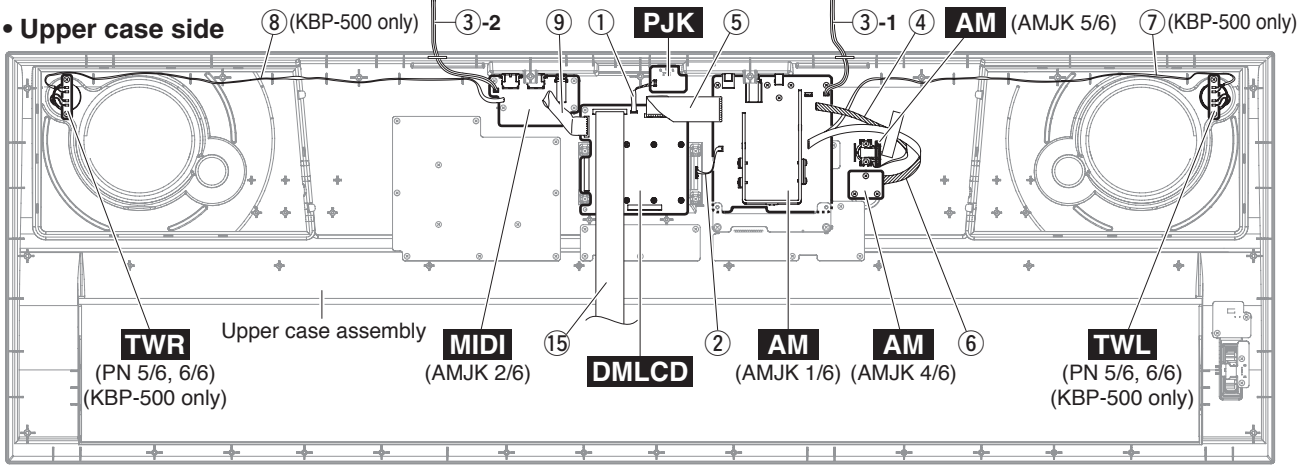


• **Keyboard assembly**

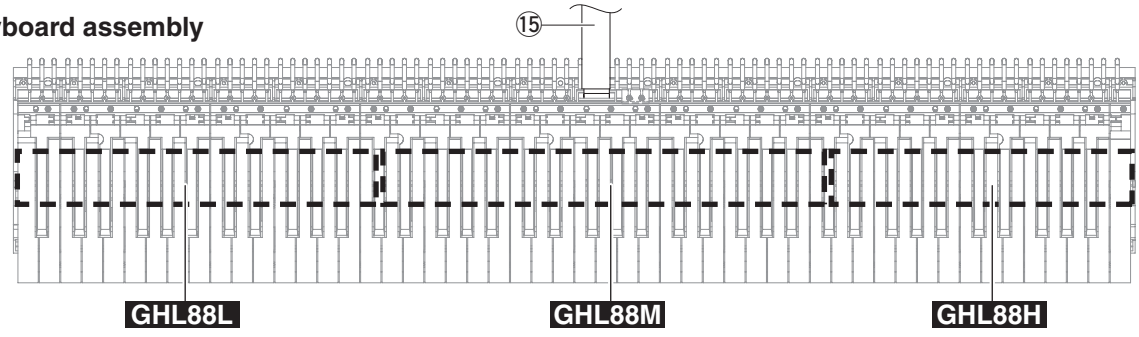


• **Upper case side**

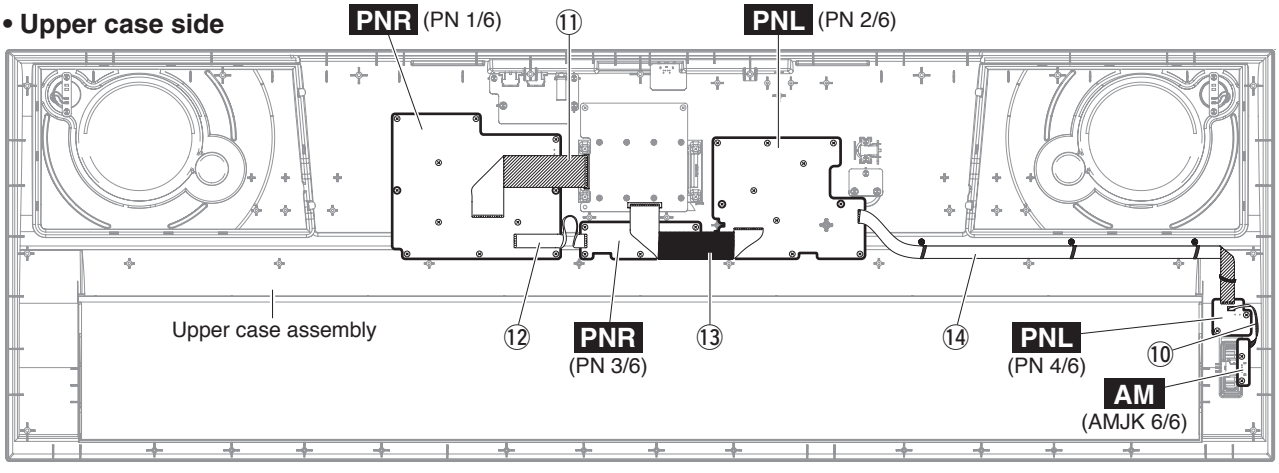

| No. | Unit name | Location | Part No. | Connector assembly | Destination | | | | | | Remarks |
|---|---|---|---|---|---|---|---|---|---|---|---|
| ① | Overall assembly | 22 | (WM94150) | PEDAL | PJK-CN1 | *1 | *8 | DMLCD-CN801 | *1 | *8 | 6P |
| ② | LCD unit | L40 | (WC60260) | BL | Back light assembly | *2 | *7 | AM-CN152 | *1 | *4 | 2P L=70 |
| ③**-1** | Lower case assembly | 30 | (WM44970) | SP | Speaker L | *2 | *5 | AM-CN554 | *1 | *6 | 2P |
| ③**-2** | | | | | Speaker R | *2 | *5 | MIDI-CN555 | *1 | *6 | 2P |
| ④ | AM circuit board | WH153 | (WG33270) | STB2 | AM-CN153 | *3 | *4 | AM-CN154 | *3 | *4 | 4P L=230 |
| ⑤ | | WH155 | (WG33120) | AMDM | AM-CN155 | *3 | *4 | DMLCD-CN101 | *1 | *4 | 13P L=120 |
| ⑥ | | WH551 | (WG33260) | VR3 | AM-CN551 | *3 | *4 | AM-CN552 | *3 | *4 | 5P L=230 |
| ⑦ | | WH553 | (WM46850) | TWL | AM-CN553 | *3 | *4 | TWL +/- | *2 | *7 | 2P |
| ⑧ | MIDI circuit board | WH556 | (WM46860) | TWR | MIDI-CN556 | *3 | *4 | TWR +/- | *2 | *7 | 2P |
| ⑨ | | WH853 | (WG33110) | JK1 | MIDI-CN853 | *3 | *4 | DMLCD-CN803 | *1 | *4 | 9P L=90 |
| ⑩ | PB circuit board | WH855 | (WG33160) | PB3 | PB-CN855 | *3 | *4 | PNL-CN777 | *1 | *4 | 3P L=100 |
| ⑪ | PNR circuit board | WH771 | (WG33210) | PN5 | PNR-CN771 | *3 | *4 | DMLCD-CN701 | *1 | *4 | 16P L=170 |
| ⑫ | | WH772 | (WG33230) | PN7 | PNR-CN772 | *3 | *4 | PNR-CN773 | *3 | *4 | 7P L=170 |
| ⑬ | PNL circuit board | WH774 | (WG33220) | PN6 | PNL-CN774 | *3 | *4 | DMLCD-CN703 | *1 | *4 | 16P L=200 |
| ⑭ | | WH775 | (WM46840) | PN80 | PNL-CN775 | *3 | *4 | PNL-CN776 | *3 | *4 | 6P |
| ⑮ | Keyboard assembly | 20 | WG12390R | FFC cable | GHL88M-CN2 | *1 | *8 | DMLCD-CN401 | *1 | *8 | 27P |

*The parts with “( )” in “**Part No.**” are not available as spare parts.

*1: Installation

*2: Manual soldering

*3: Dip soldering

*4: Edge mark is adjusted to Pin 1 mark ( △ mark).

*5: Red wire is connected to (+) terminal. Black wire is connected to (-) terminal.

*6: Red wire is adjusted to Pin 1 mark ( △ mark).

*7: Edge mark is adjusted to + mark.

*8: Align the conductor of a cable with point of contact a connector.

**Caution:** Be sure to attach the removed filament tape just as it was before removal.

# DISASSEMBLY PROCEDURE

***Caution:***

***1. Be sure to attach the removed filament tape just as it was before removal.***

***2. Pay attention not to insert and install the cable to the connector inversely. (Photo 1)***

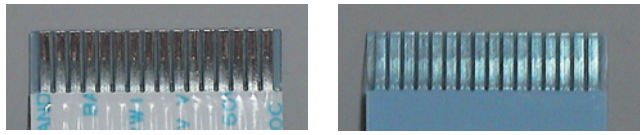

Front Side (Printed Side) Back Side

Photo 1

## 1. Lower Case Assembly

**(Time required: About 16 minutes)**

1-1 Remove the twenty (20) screws marked [40A]. The bottom board sub assembly (L) and bottom board sub assembly (R) can then be removed.(Fig. 1)

1-2 Remove the twenty-eight (28) screws marked [39] and the forty-six (46) screws marked [40B]. The lower case assembly can then be removed. (Fig. 2)

**<Bottom view>**

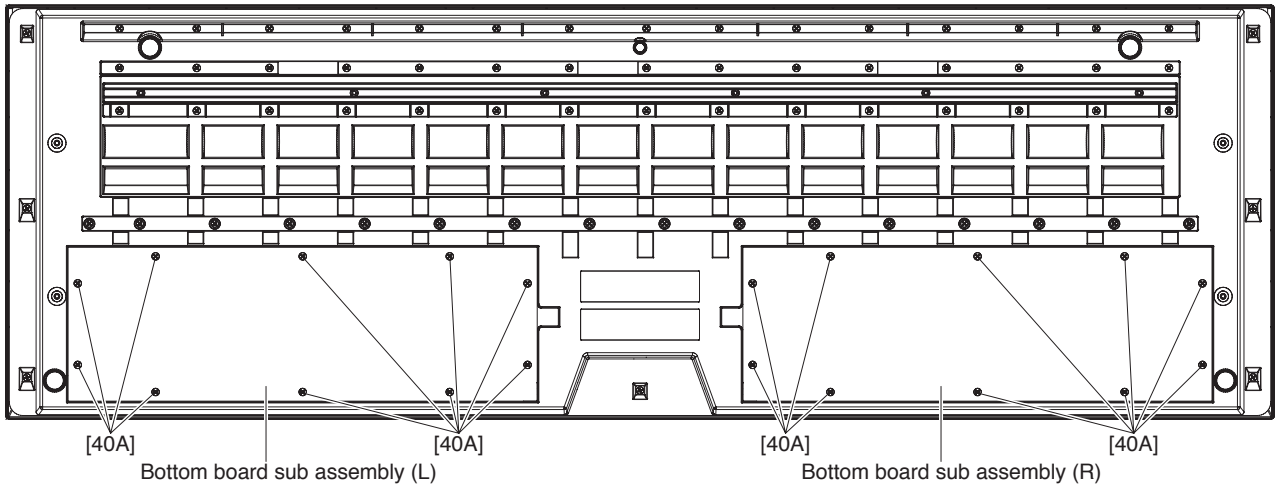


[40]: Bind Head Tapping Screw-B 4.0X16 MFZN2W3 (WF15410R)

Fig. 1

**<Bottom view>**

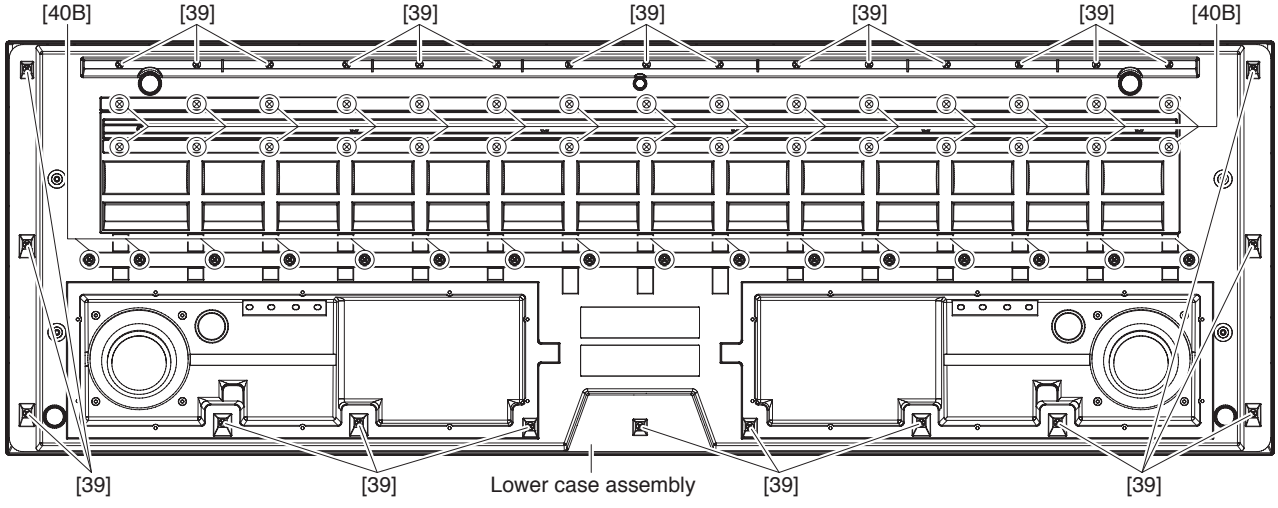


[39]: Bind Head Tapping Screw-B 4.0X12 MFZN2W3 (WE98120R)
[40]: Bind Head Tapping Screw-B 4.0X16 MFZN2W3 (WF15410R)

Fig. 2

## 2. AM Circuit Board
**(Time required: About 18 minutes)**

2-1 Remove the “MASTER VOLUME” knob as shown in Fig. 3. (Fig. 3)

2-2 Remove the screw marked [37A]. (Fig. 5)

2-3 Remove the lower case assembly. (See procedure 1.)

2-4 Remove the seven (7) screws marked [37B], three (3) screws marked [37C] and two (2) screws marked [37D]. The AM circuit board assembly can then be removed. (Fig. 5)

2-5 Remove the two (2) screws marked [20c]. The AM angle can then be removed from the AM circuit board. (Photo 2)

* ***The screws [20c] and AM angle are not parts of the AM circuit board. When replacing the AM circuit board, be sure to remove these parts and attach them to the new AM circuit board.***

2-6 Pull out the push knob from the AM circuit board. (Fig. 4)

## 3. LCD Unit **(Time required: About 3 minutes)**

3-1 Remove the lower case assembly. (See procedure 1.)

3-2 Remove the two (2) screws marked [37E]. The Wire holder can then be removed. (Fig. 5)

3-3 Remove the two (2) screws marked [37F] and four (4) screws marked [37G]. The LCD unit can then be removed. (Fig. 5)

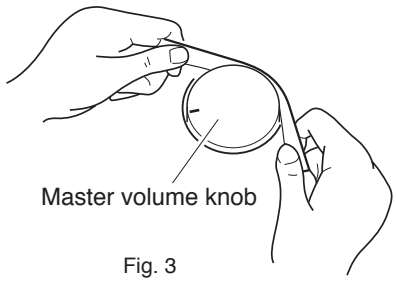


Fig. 3

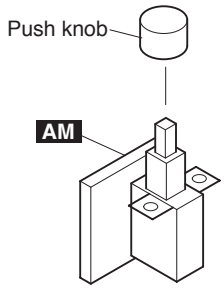


Fig. 4

**• AM circuit board assembly**

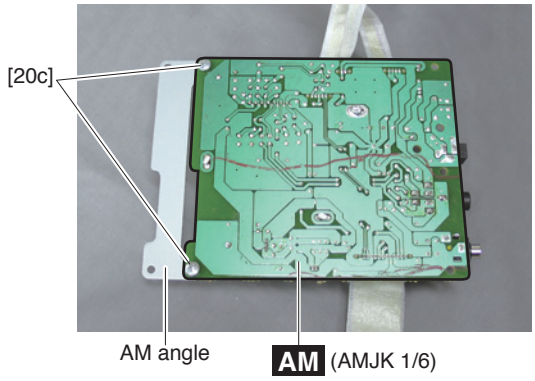


[20c]: Bind Head Tapping Screw-B 4.0X8 MFZN2W3 (WE97460R)

Photo 2

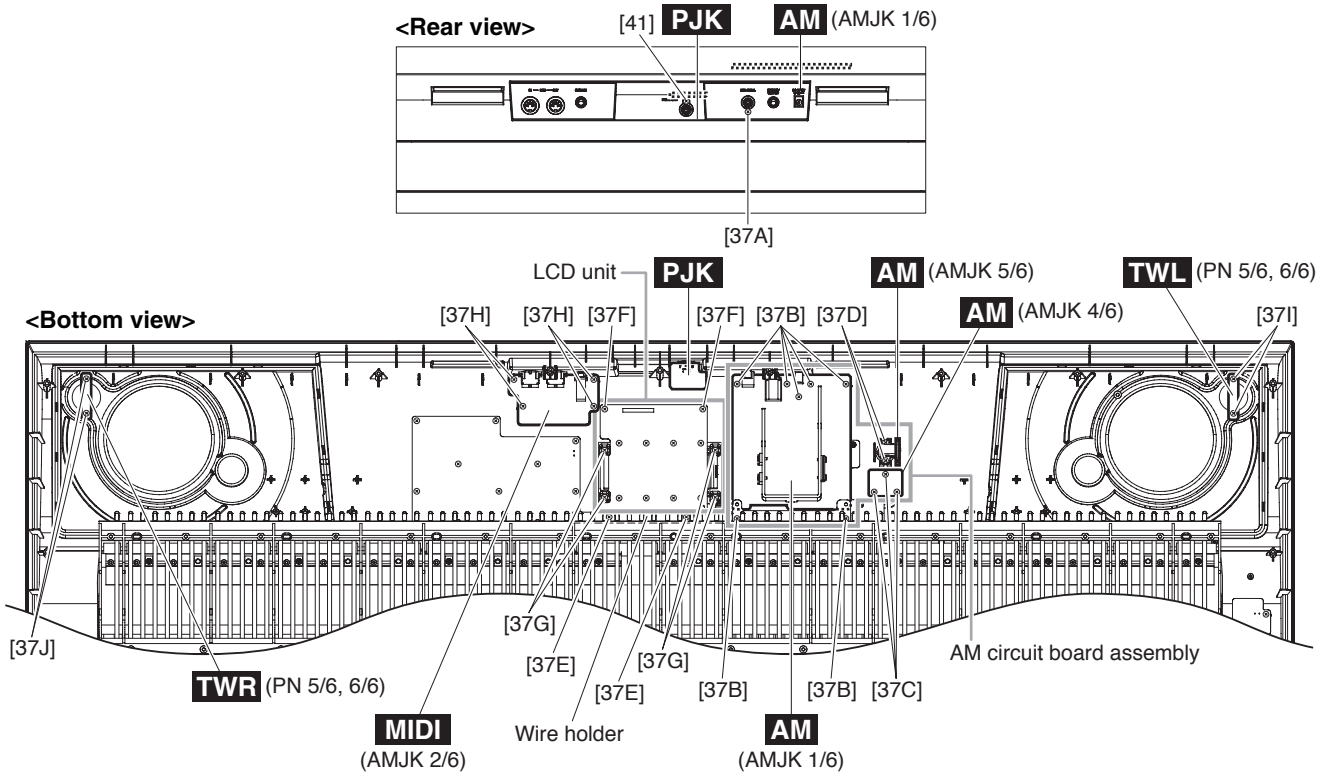


[37]: Bind Head Tapping Screw-B 3.0X8 MFZN2W3 (WE774300)
[41]: Bind Head Screw 3.0X6 MFZN2W3 (WE774000)

Fig. 5

## 4. DMLCD Circuit Board, Back Light Assembly and LCD (Time required: About 18 minutes)

4-1 Remove the lower case assembly. (See procedure 1.)
4-2 Remove the LCD unit. (See procedure 3.)
4-3 Remove the eight (8) screws marked [L100]. The DMLCD circuit board can then be removed from the LCD unit. (Fig. 6)
4-4 Remove the LCD, back light assembly and rubber connectors from the LCD panel. (Fig. 6)

* ***When attaching the rubber connector to the LCD panel, set the conductor side to face inward. (Fig. 7)***

* ***When installing the DMLCD circuit board, tighten the screws 1 through 8 in numerical order as shown in Fig. 8. (Fig. 8)***
***If the DMLCD circuit board is replaced, execute the "Factory Set" in the test program.***

## 5. MIDI Circuit Board
**(Time required: About 16 minutes)**

5-1 Remove the lower case assembly. (See procedure 1.)
5-2 Remove the TWR wiring assembly soldered to the TWR circuit board. (Fig. 5, Photo 4)
5-3 Remove the four (4) screws marked [37H]. The MIDI circuit board can then be removed. (Fig. 5)

## 6. PJK Circuit Board
**(Time required: About 16 minutes)**

6-1 Remove the lower case assembly. (See procedure 1.)
6-2 Remove the screw marked [41]. The PJK circuit board can then be removed. (Fig. 5)

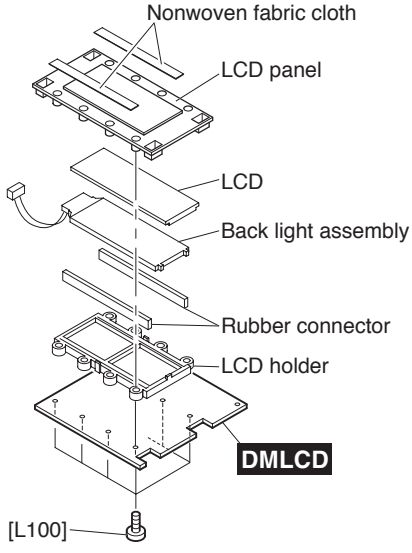


[L100]: Bind Head Tapping Screw-P 3.0X12 MFZN2W3 (WE972900)

Fig. 6

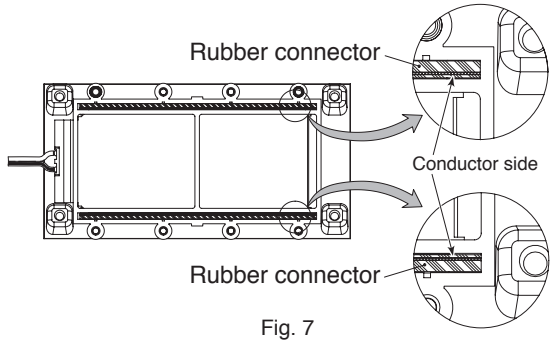


Fig. 7

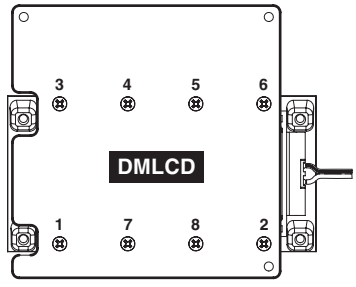


Fig. 8

## 7. TWL, TWR Circuit Board and Speakers (Tweeters KBP-500 only)

**(Time required: About 16 minutes)**

7-1 Remove the lower case assembly. (See procedure 1.)

7-2 Remove the TWL circuit board and TWR circuit board in the following way.

7-2-1 **TWL Circuit Board and Speaker L (Tweeter)**
Remove the TWL wiring assembly and SP wiring assembly soldered to the TWL circuit board and remove the two (2) screws marked [37I]. The TWL circuit board and speaker L (tweeter) can then be removed. (Fig. 5, Photo 3)

7-2-2 **TWR Circuit Board and Speaker R (Tweeter)**
Remove the TWR wiring assembly and SP wiring assembly soldered to the TWR circuit board and remove the two (2) screws marked [37J]. The TWR circuit board and speaker R (tweeter) can then be removed. (Fig. 5, Photo 4)

## 8. GHL Keyboard Assembly

**(Time required: About 19 minutes)**

8-1 Remove the lower case assembly. (See procedure 1.)

8-2 Remove the twelve (12) screws marked [37K]. The front rails can then be removed. (Fig. 9)

8-3 Remove the eight (8) screws marked [38]. The GHL keyboard assembly can then be removed. (Fig. 9)

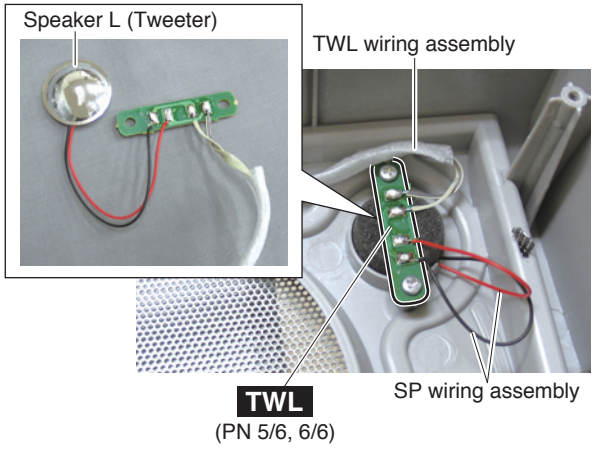


Photo 3

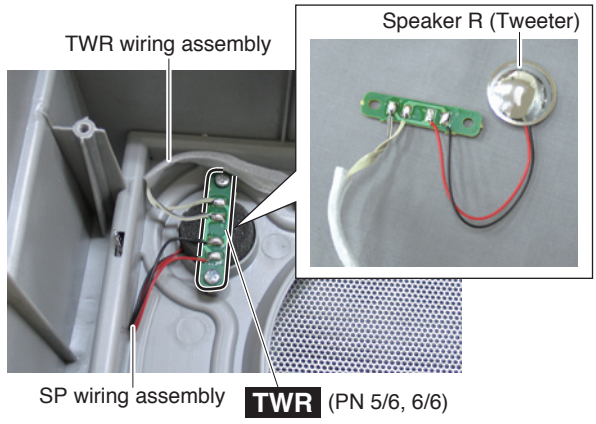


Photo 4

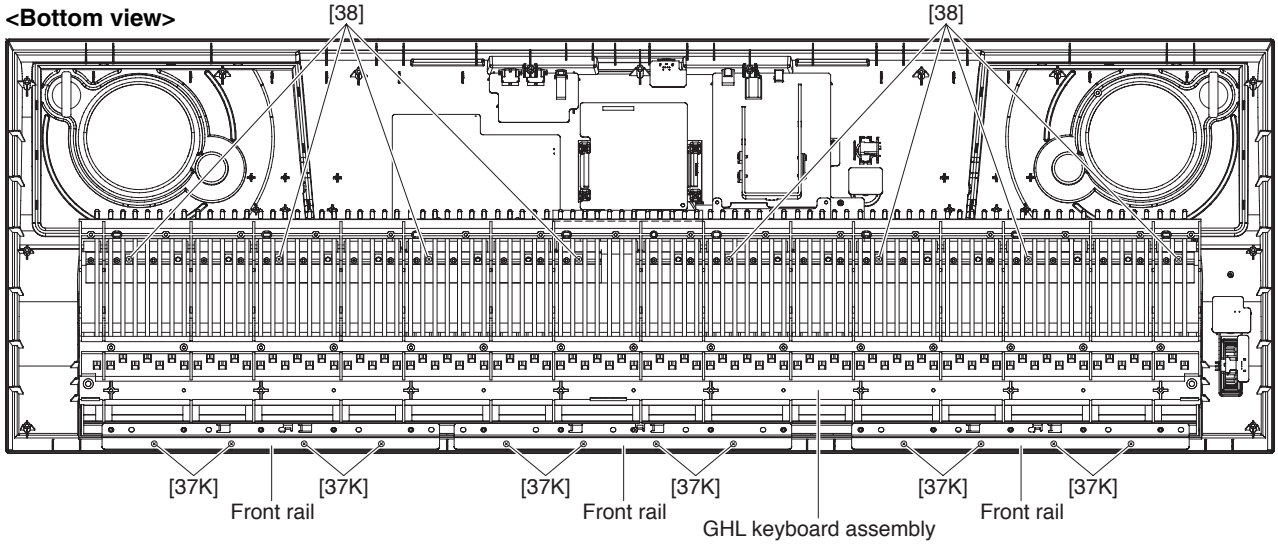


[37]: Bind Head Tapping Screw-B 3.0X8 MFZN2W3 (WE774300)
[38]: Bind Head Tapping Screw-B 3.0X20 MFZN2W3 (WF48930R)

Fig. 9

## 9. PNL Circuit Board
**(Time required: About 21 minutes)**

9-1 Remove the lower case assembly. (See procedure 1.)
9-2 Remove the AM circuit board assembly. (See procedure 2.)
9-3 Remove the GHL keyboard assembly. (See procedure 8.)
9-4 Remove the Wire holder. (See procedure 3-2.)
9-3 Remove the eleven (11) screws marked [37L] and two (2) screws marked [37M]. The PNL circuit board can then be removed. (Fig. 10)

## 10. PNR Circuit Board
**(Time required: About 22 minutes)**

10-1 Remove the lower case assembly. (See procedure 1.)
10-2 Remove the GHL keyboard assembly. (See procedure 8.)
10-3 Remove the Wire holder. (See procedure 3-2.)
10-4 Remove the thirteen (13) screws marked [37N] and six (6) screws marked [37P]. The PNR circuit board can then be removed. (Fig. 10)

## 11. PB Circuit Board and Wheel Assembly
**(Time required: About 16 minutes)**

11-1 Remove the lower case assembly. (See procedure 1.)
11-2 Remove the two (2) screws marked [37Q] and remove the PB circuit board with the wheel assembly attached. (Fig. 10)
11-3 Pull out the wheel assembly from the PB circuit board. (Fig. 11)

## 12. SP Grille L Sub Assembly, SP Grille R Sub Assembly **(Time required: About 16 minutes)**

12-1 Remove the lower case assembly. (See procedure 1.)
12-2 Set the eight (8) hooks [A] parallel to the groove in the upper case assembly and remove the SP grille L sub assembly. (Fig. 10)
* ***The speaker grille R sub assembly can be removed in the same manner.***

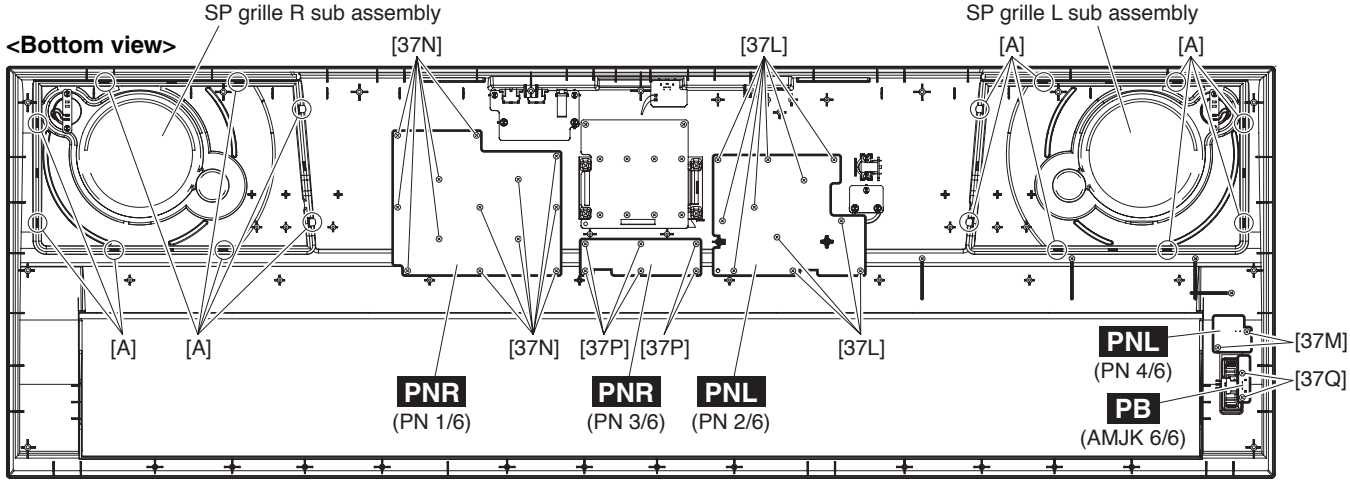


[37]: Bind Head Tapping Screw-B 3.0X8 MFZN2W3 (WE774300)

Fig. 10

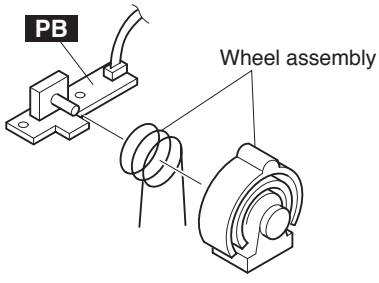


Fig. 11

## 13. Speakers (Woofer)

**(Time required: About 16 minutes)**

13-1 Remove the lower case assembly. (See procedure 1.)

13-2 Remove the four (4) each screws marked [40C] to the right and left. The speakers (woofers) to the right and left can then be removed. (Fig. 12)

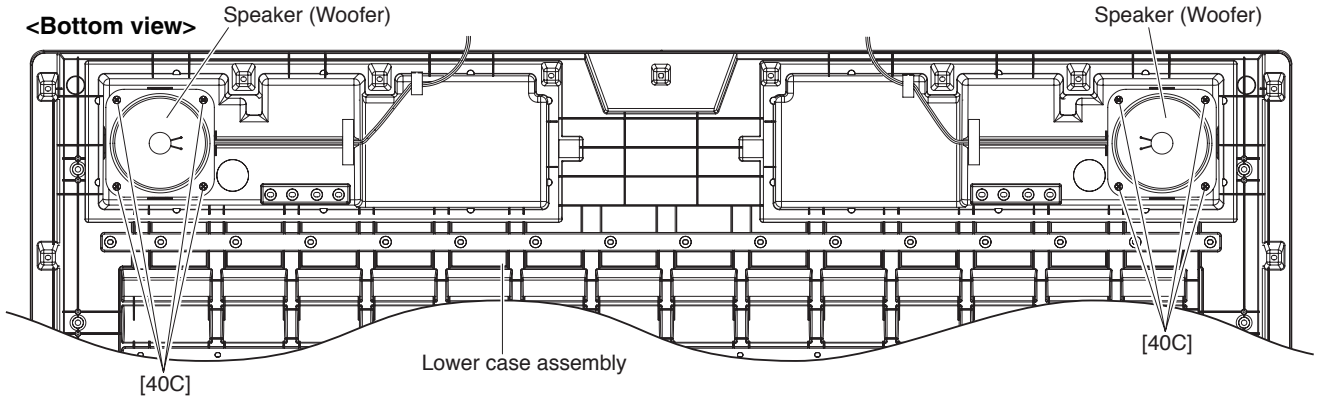


[40]: Bind Head Tapping Screw-B 4.0X16 MFZN2W3 (WF15410R)

Fig. 12

## 14. Disassembling the Keyboard Assembly

14-1 **White key assembly and black key assembly**
Remove the four (4) screws marked [270A] fixing the black and white key assembly for one octave (C–B). To remove the back of the black and white key assembly of each octave, while pushing the end lug of white keys rearward and lifting the back of keys, slide the black and white key assembly towards you. (Fig.13, Fig.14)

14-2 When removing white keys numbered as A-1 and B-1 key and black key, remove two (2) screws marked [270B] and then lift the back of the keys and slide the black and white keys towards you. (Fig. 13)

14-3 When removing the C7 key, remove a screw marked [270C] and then lift the back of C7 key and slide it towards you. (Fig. 13)

***Note: When removing white key assembly and black key assembly, be careful not to allow grease to attach to the circuit board and rubber contacts, etc. (Fig. 14)***

14-4 **Actuate Rubber**
Remove the actuate rubber. (Fig. 15)

14-5 **Rubber Contact**
Remove the black and white key assembly for two octaves related to the subject rubber contact. The rubber contact can then be removed.
(Fig. 16, Fig. 16-1)

* ***Note that the rubber contact has a specific installation direction.***

* ***One rubber contact fits for C# – C (for C – B keys).***

**• Keyboard assembly**

**<Top view>**

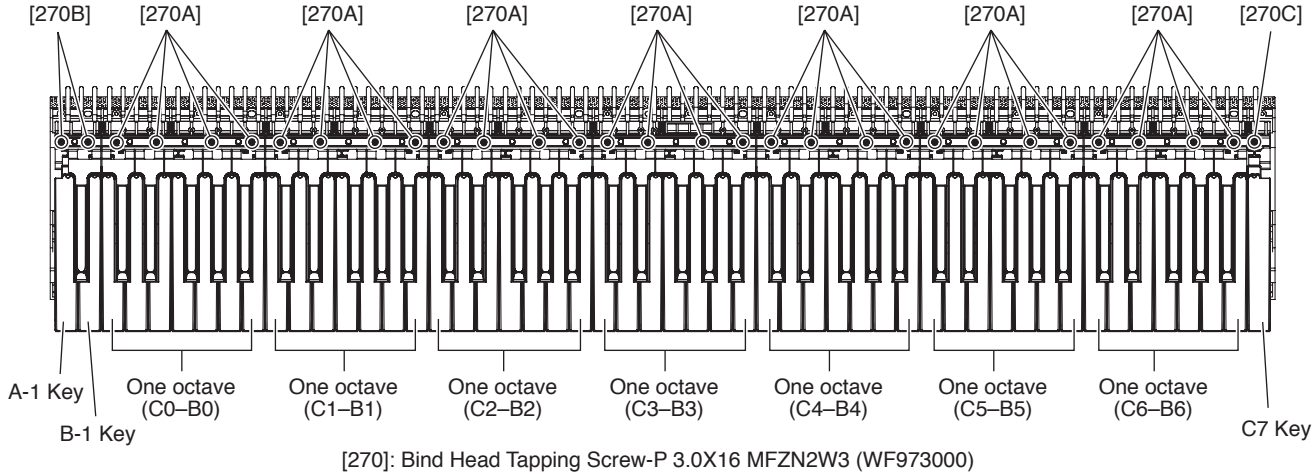


[270]: Bind Head Tapping Screw-P 3.0X16 MFZN2W3 (WF973000)

Fig. 13

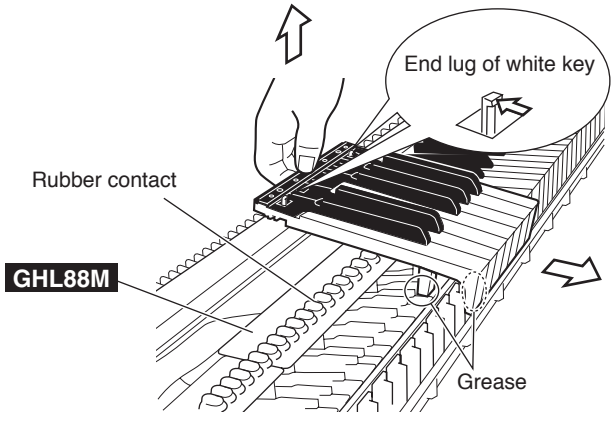


Fig. 14

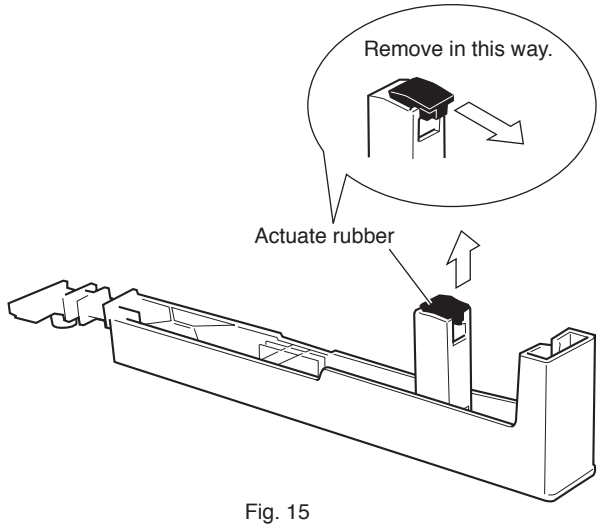


Fig. 15

14-6 **GHL88L Circuit Board**

Remove the black and white key assembly (A-1 – B2). (See procedure 14-1)

Remove the six (6) screws marked [260A].

The GHL88L circuit board can then be removed. (Fig. 16)

14-7 **GHL88M Circuit Board**

Remove the black and white key assembly (C1 – B5). (See procedure 14-1)

Remove the seven (7) screws marked [260B].

The GHL88M circuit board can then be removed. (Fig. 16)

Detach the filament tape and disconnect the FFC cable. (Fig. 17)

14-8 **GHL88H Circuit Board**

Remove the black and white key assembly (C5 – C7). (See procedure 14-1)

Remove the five (5) screws marked [260C].

The GHL88H circuit board can then be removed. (Fig. 16)

## • Keyboard assembly

**<Top view>**

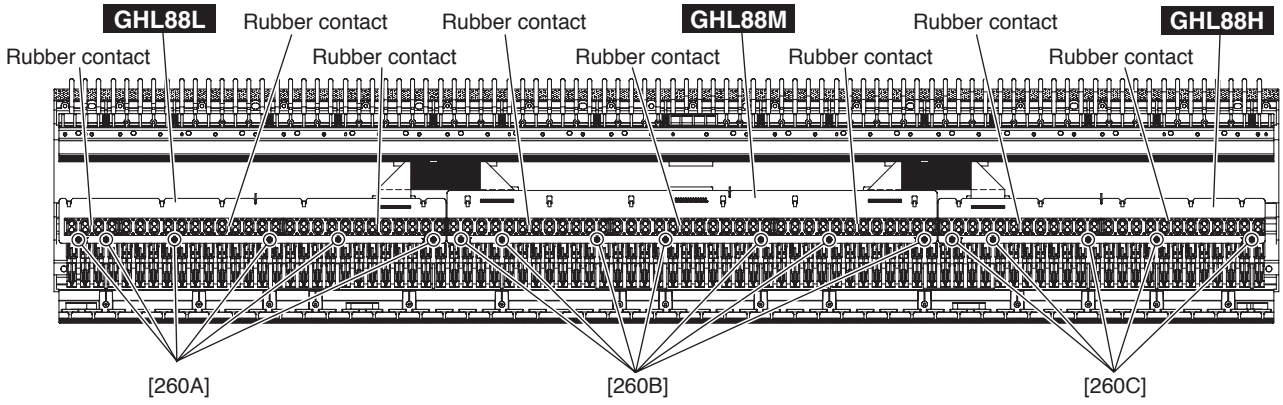


[260]: Bind Head Tapping Screw-P 2.6X8 MFZN2W3 (WF267300)

Fig. 16

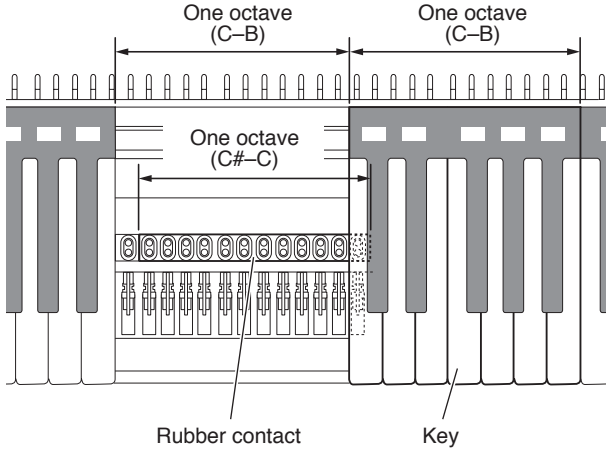


To remove the rubber contact for one octave, keys for 2 octaves need to be removed.

Fig. 16-1

• **Keyboard assembly**

**<Top view>**

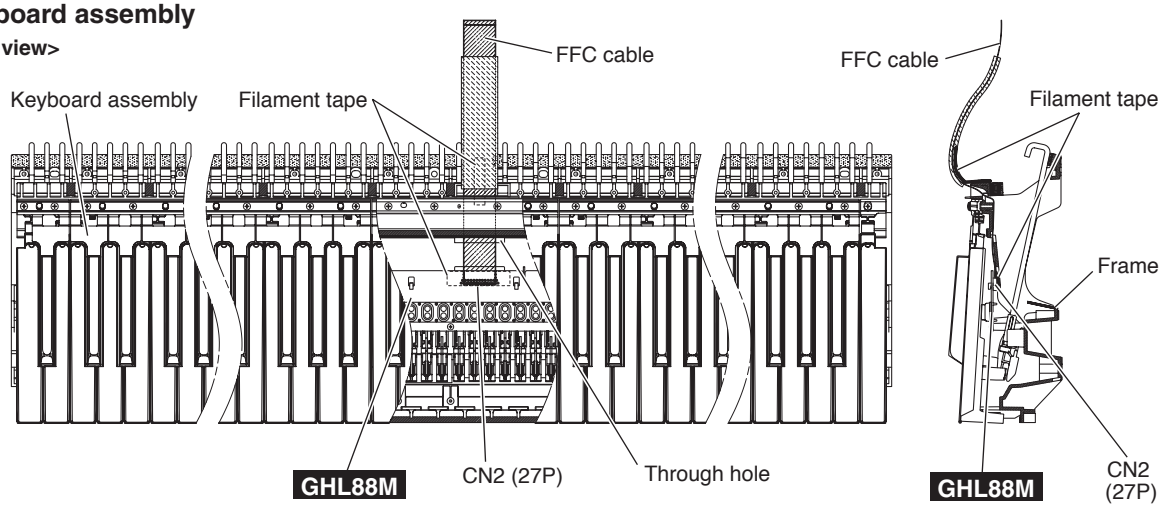


Fig. 17

14-9 **Hammer (White Key), (Black Key)**

Remove the black and white key assembly for the related keys.

With the key frame placed upside down, push the hammer forward from the rear, then a click sound is heard and the hammer bearing section can be removed from the hammer axis of the key frame.

Take out the hammer sideways. (Fig. 18, Fig. 19)

* ***When removing the hammer, use care not to cause damage to the hammer bearing and its claw.***

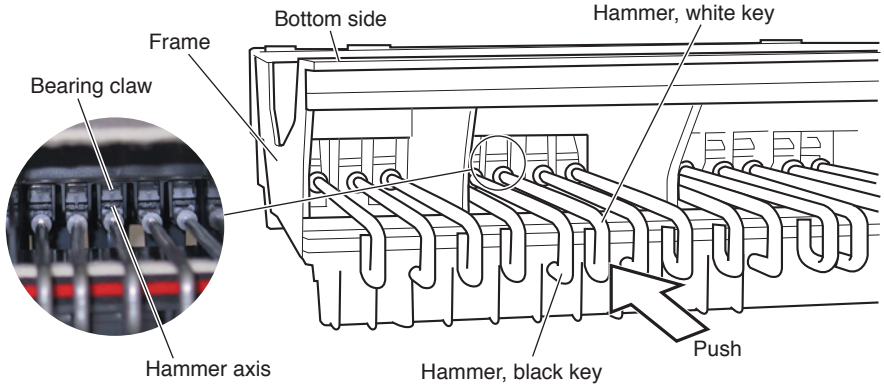


Fig. 18

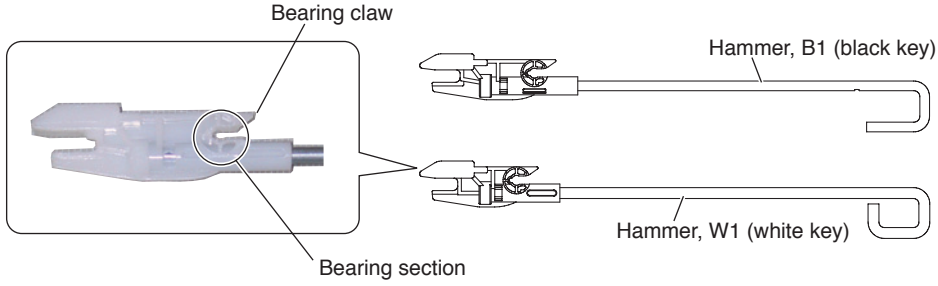


Fig. 19

## 15. Assembling the Keyboard Assembly

15-1 **Hammer (White Key), (Black Key)**

After applying grease to the bearing section of the hammer, bring the hammer (white key) (black key) sideways from the rear, fit its bearing section to the hammer axis of the key frame and pull it forward until a click sound is heard. (Fig. 20)

* ***There are 8 hammer types differing in weight. Be sure to check the type of the hammer for correct installation. (See the table below)***

| | Part Name | Range for Applicable Tone Name |
|---|---|---|
| White Key | Hammer, W1 | A-1 – F1 |
| | Hammer, W2 | G1 – E3 |
| | Hammer, W3 | F3 – D5 |
| | Hammer, W4 | E5 – C7 |
| | | |
| Black Key | Hammer, B1 | A#-1 – F#1 |
| | Hammer, B2 | G#1 – D#3 |
| | Hammer, B3 | F#3 – C#5 |
| | Hammer, B4 | D#5 – A#6 |

15-2 **GHL88L Circuit Board**

Tighten the six (6) screws marked [260A] to fix the GHL88L circuit boards. (Fig. 16)

15-3 **GHL88M Circuit Board**

Connect the FFC cable to CN2 of the GHL88M circuit board, attach the filament tape. (Fig. 17)
Pass the end of the cable into the through hole in the frame and pull it out from its outlet. (Fig. 17)
Tighten the seven (7) screws marked [260B] to fix the GHL88M circuit board. (Fig. 16)

15-4 **GHL88H Circuit Board**

Tighten the five (5) screws marked [260C] to fix the GHL88H circuit board. (Fig. 16)

15-5 **Rubber Contact**

Note that the rubber contact has specific installation direction. Be careful not to install it in the wrong direction.

* ***A triangle mark (△) on the rubber contact must face the front. (Fig. 21)***
***To prevent looseness of the rubber contact, fit it securely in place using a clip or similar object. (Fig. 22)***

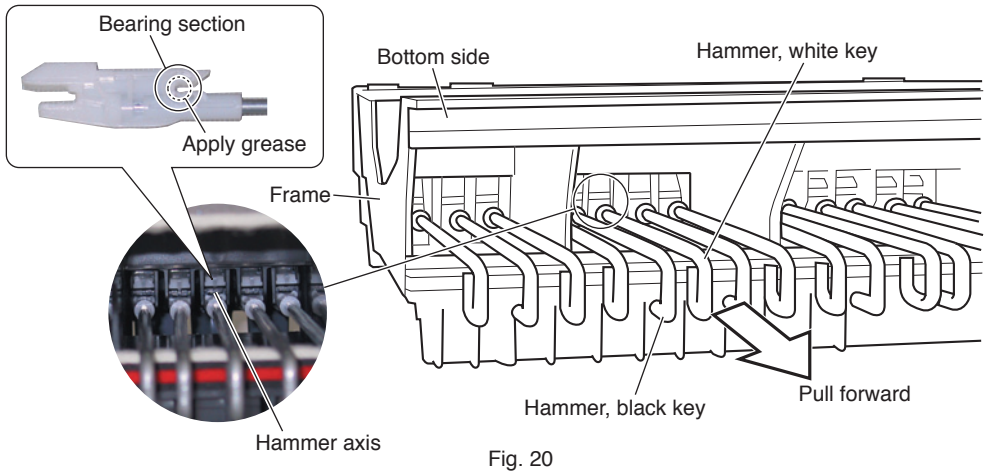


Fig. 20

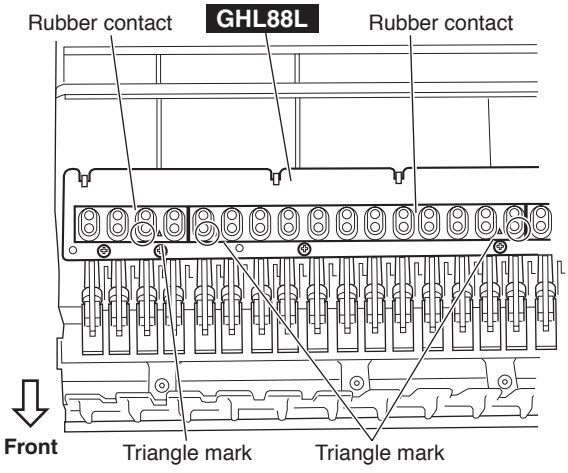


Fig. 21

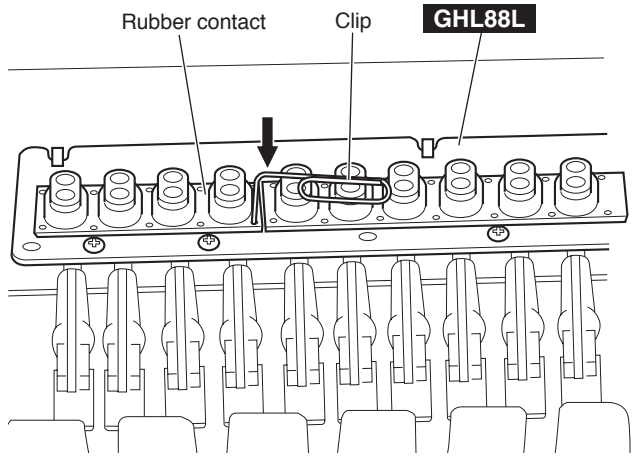


Fig. 22

15-6 **Actuate Rubber**
After applying grease to top and bottom faces of the actuate rubber, fit it to the white key (black key). (Fig. 23)

15-7 **White key assembly and black key assembly**
After applying grease to the key guide, install the white key assembly/black key assembly. At this time, check to make sure that the key guide of the key frame and inside slit at the front of white key as well as the contact arm of the hammer and actuate rubber of the white key assembly/black key assembly are installed properly. (Fig. 24)
Use the four (4) screws marked [270A] to fix 1 octave white key assembly/black key assembly. (Fig. 13)

15-8 Use the two (2) screws marked [270B] to fix the A-1 to B-1 keys. (Fig. 13)

15-9 Use a screw marked [270C] to fix the C7 key. (Fig. 13)

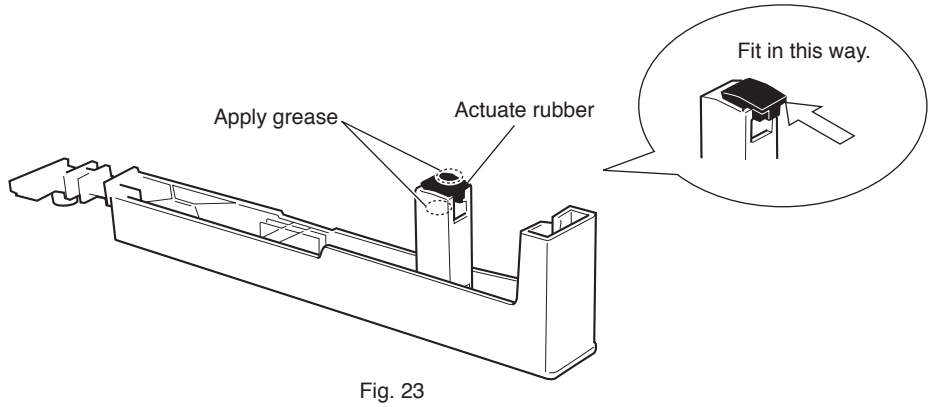


Fig. 23

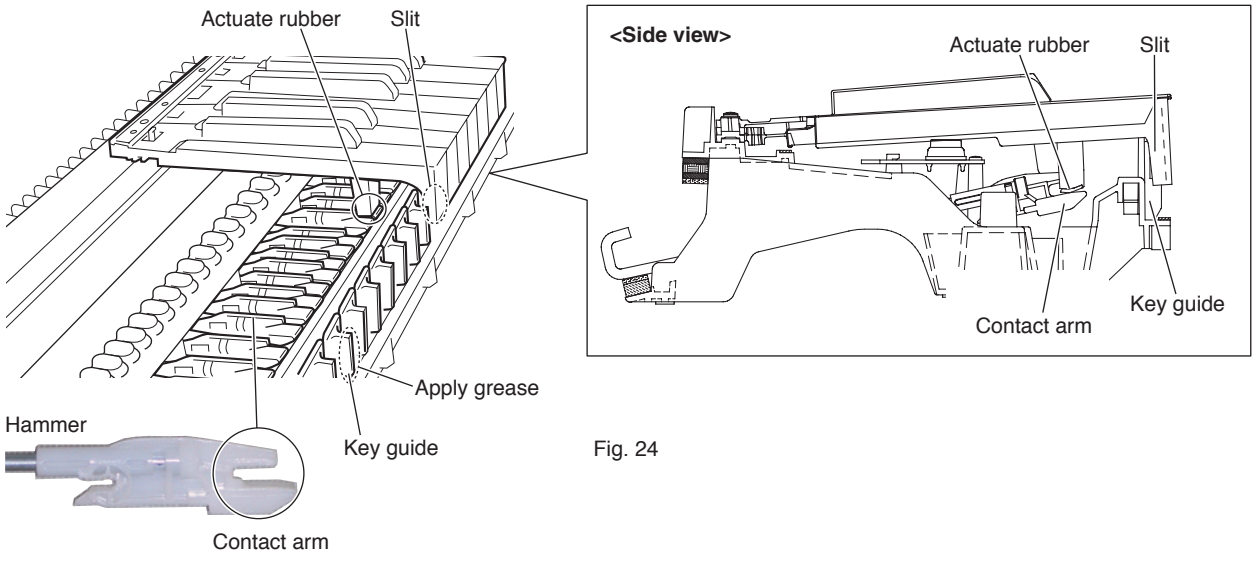


Fig. 24

# ■ LSI PIN DESCRIPTION

**NT3881DFG-01** (X3148A0R) LCD DRIVER .....19
**ML9040A-B01GAZ03A** (XZ987A0R) LCD DRIVER .....19
**ADC084S021CIMM** (X6905A00) ADC (Analog to Digital Converter) .....19
**YMW767-VTZ** (X6055A0R) CPU (SWL01T) .....20
**µPD789022GB-A15-8E** (XZ56010R) CPU (KBS) .....21
**AK4385ET** (X6040A01) DAC (Digital to Analog Converter) .....21

## ● **NT3881DFG-01** (X3148A0R) **LCD DRIVER**
## ● **ML9040A-B01GAZ03A** (XZ987A0R) **LCD DRIVER**

DMLCD: IC601

| PIN NO. | NAME | I/O | FUNCTION | PIN NO. | NAME | I/O | FUNCTION |
|---|---|---|---|---|---|---|---|
| 1 | S22 | O | | 41 | DB2 | I/O | |
| 2 | S21 | O | | 42 | DB3 | I/O | |
| 3 | S20 | O | | 43 | DB4 | I/O | |
| 4 | S19 | O | | 44 | DB5 | I/O | Data interface |
| 5 | S18 | O | | 45 | DB6 | I/O | |
| 6 | S17 | O | | 46 | DB7 | I/O | |
| 7 | S16 | O | | 47 | C1 | O | |
| 8 | S15 | O | | 48 | C2 | O | |
| 9 | S14 | O | | 49 | C3 | O | |
| 10 | S13 | O | | 50 | C4 | O | |
| 11 | S12 | O | Segment signal output for LCD | 51 | C5 | O | |
| 12 | S11 | O | driving | 52 | C6 | O | |
| 13 | S10 | O | | 53 | C7 | O | |
| 14 | S9 | O | | 54 | C8 | O | Common signal output for LCD |
| 15 | S8 | O | | 55 | C9 | O | driving |
| 16 | S7 | O | | 56 | C10 | O | |
| 17 | S6 | O | | 57 | C11 | O | |
| 18 | S5 | O | | 58 | C12 | O | |
| 19 | S4 | O | | 59 | C13 | O | |
| 20 | S3 | O | | 60 | C14 | O | |
| 21 | S2 | O | | 61 | C15 | O | |
| 22 | S1 | O | | 62 | C16 | O | |
| 23 | GND | | Ground | 63 | S40 | O | |
| 24 | OSC1 | I | Oscillator | 64 | S39 | O | |
| 25 | OSC2 | O | Oscillator | 65 | S38 | O | |
| 26 | V1 | | | 66 | S37 | O | |
| 27 | V2 | | | 67 | S36 | O | |
| 28 | V3 | | Power supply | 68 | S35 | O | |
| 29 | V4 | | | 69 | S34 | O | |
| 30 | V5 | | | 70 | S33 | O | |
| 31 | L | O | Data latch clock | 71 | S32 | O | Segment signal output for LCD |
| 32 | CP | O | Data shift clock | 72 | S31 | O | driving |
| 33 | Vdd | | Power supply (+5 V) | 73 | S30 | O | |
| 34 | DF | O | Altamated signal for LCD driver output | 74 | S29 | O | |
| 35 | DO | O | Display data interface | 75 | S28 | O | |
| 36 | RS | I | | 76 | S27 | O | |
| 37 | R/W | I | Read/write | 77 | S26 | O | |
| 38 | E | I | Enable | 78 | S25 | O | |
| 39 | DB0 | I/O | Data interface | 79 | S24 | O | |
| 40 | DB1 | I/O | Data interface | 80 | S23 | O | |

## ● **ADC084S021CIMM** (X6905A00) **ADC** (Analog to Digital Converter)

DMLCD: IC801

| PIN NO. | NAME | I/O | FUNCTION | PIN NO. | NAME | I/O | FUNCTION |
|---|---|---|---|---|---|---|---|
| 1 | $\overline{CS}$ | I | Chip select | 6 | AIN2 | I/O | Analog input |
| 2 | VA | - | Power supply +3.3 V | 7 | AIN1 | I/O | |
| 3 | GND | - | Ground | 8 | DIN | I | Digital data input |
| 4 | AIN4 | I/O | Analog input | 9 | DOUT | O | Digital data output |
| 5 | AIN3 | I/O | | 10 | SCLK | I | Digital clock input |

## • YMW767-VTZ (X6055A0R) CPU (SWL01T)

DMLCD: IC301

| PIN NO. | NAME | I/O | FUNCTION | PIN NO. | NAME | I/O | FUNCTION |
|---|---|---|---|---|---|---|---|
| 1 | Vss | - | Ground | 65 | Vss | - | Ground |
| 2 | TESTN | I | Input for TEST | 66 | $IOV_{DD}$ | - | Power supply +3.3 V |
| 3 | PLLBPN | I | PLL bypass select | 67 | LBN/LWRN/PF6 | O | External memory lower-byte enable / Port F |
| 4 | $PLLV_{DD}$ | - | PLL Power supply +2.5 V | 68 | UBN/UWRN/PF7 | O | External memory upper-byte enable / Port F |
| 5 | CIN | - | Capacitor terminal for PLL | 69 | RDN/PF4 | O | External memory read enable / Port F |
| 6 | PLLVss | - | PLL Ground | 70 | MD00 | I/O | |
| 7 | TRSTN | I | | 71 | MD08 | I/O | |
| 8 | TMS | I | JTAG input | 72 | MD01 | I/O | |
| 9 | TCK | I | | 73 | MD09 | I/O | External memory data bus |
| 10 | TDI | I | | 74 | MD02 | I/O | |
| 11 | TDO | O | JTAG output | 75 | MD10 | I/O | |
| 12 | XI | I | Crystal oscillator | 76 | MD03 | I/O | |
| 13 | XO | O | Crystal oscillator | 77 | Vss | - | Ground |
| 14 | Vss | - | Ground | 78 | MD11 | I/O | |
| 15 | $V_{DD}$ | - | Power supply +2.5 V | 79 | MD04 | I/O | |
| 16 | ICN | I | Hardware reset | 80 | MD12 | I/O | |
| 17 | ECSN | I | CPU I/F chip select | 81 | MD05 | I/O | |
| 18 | EWRN/PD5 | I | CPU I/F write enable / Port D | 82 | MD13 | I/O | External memory data bus |
| 19 | ERDN/PD4 | I | CPU I/F read enable / Port D | 83 | MD06 | I/O | |
| 20 | EA3/PD3 | I | | 84 | MD14 | I/O | |
| 21 | EA2/PD2 | I | CPU I/F address bus / Port D | 85 | MD07 | I/O | |
| 22 | EA1/PD1 | I | | 86 | MD15 | I/O | |
| 23 | EA0/PD0 | I | | 87 | WRN/PF5 | O | |
| 24 | $IOV_{DD}$ | - | Power supply +3.3 V | 88 | Vss | - | Ground |
| 25 | ED0/PC0 | I/O | | 89 | $V_{DD}$ | - | Power supply +2.5 V |
| 26 | ED1/PC1 | I/O | | 90 | $IOV_{DD}$ | - | Power supply +3.3 V |
| 27 | ED2/PC2 | I/O | | 91 | MA17 | O | |
| 28 | ED3/PC3 | I/O | CPU I/F data bus / Port C | 92 | MA16 | O | |
| 29 | ED4/PC4 | I/O | | 93 | MA15 | O | |
| 30 | ED5/PC5 | I/O | | 94 | MA14 | O | |
| 31 | ED6/PC6 | I/O | | 95 | MA13 | O | |
| 32 | ED7/PC7 | I/O | | 96 | MA12 | O | |
| 33 | Vss | - | Ground | 97 | MA11 | O | External memory address bus |
| 34 | IRQ0N/PH0 | I | Interrupt input / Port H | 98 | MA10 | O | |
| 35 | TxD0 | O | Serial output | 99 | MA09 | O | |
| 36 | RxD0 | I | Serial input | 100 | MA08 | O | |
| 37 | TxD1/PG2 | O | Serial output / Port G | 101 | MA07 | O | |
| 38 | RxD1/PH1 | I | Serial input / Port H | 102 | MA06 | O | |
| 39 | SCLK1/PH2 | I | External synchronization clock / Port H | 103 | MA05 | O | |
| 40 | SDO | O | Serial output | 104 | Vss | - | Ground |
| 41 | SDI/PH3 | I | Serial input / Port H | 105 | MA04 | O | |
| 42 | BCLK | O | Bit clock output | 106 | MA03 | O | External memory address bus |
| 43 | WCLK/SYO | O | Word clock output | 107 | MA02 | O | |
| 44 | SYSCLK/PG3 | O | Clock output / Port G | 108 | MA01 | O | |
| 45 | Vss | - | Ground | 109 | CS0N/PG0 | O | External memory chip select / Port G |
| 46 | $V_{DD}$ | - | Power supply +2.5 V | 110 | MA18 | O | External memory address bus |
| 47 | $IOV_{DD}$ | - | Power supply +3.3 V | 111 | MA19 | O | |
| 48 | PA0 | I/O | | 112 | MA21/PF1 | O | External memory address bus / Port F |
| 49 | PA1 | I/O | | 113 | MA22/PF2 | O | |
| 50 | PA2 | I/O | | 114 | MA20 | O | External memory address bus |
| 51 | PA3 | I/O | I/O port A | 115 | MA23/PF3 | O | External memory address bus / Port F |
| 52 | PA4 | I/O | | 116 | CSIN/PG1 | O | External memory chip select / Port G |
| 53 | PA5 | I/O | | 117 | MA00/PF0 | O | External memory address bus / Port F |
| 54 | PA6 | I/O | | 118 | Vss | - | Ground |
| 55 | PA7 | I/O | | 119 | $V_{DD}$ | - | Power supply +2.5 V |
| 56 | Vss | - | Ground | 120 | $IOV_{DD}$ | - | Power supply +3.3 V |
| 57 | PB0 | I/O | | 121 | CS2N/PE0 | O | |
| 58 | PB1 | I/O | | 122 | CS3N/PE1 | O | |
| 59 | PB2 | I/O | | 123 | CS4N/CASN/PE2 | O | |
| 60 | PB3 | I/O | I/O port B | 124 | CS5N/PE3 | O | External memory chip select / Port E |
| 61 | PB4 | I/O | | 125 | CS50RDN/PE4 | O | |
| 62 | PB5 | I/O | | 126 | CS51WRN/PE5 | O | |
| 63 | PB6 | I/O | | 127 | CS52WRN/PE6 | O | |
| 64 | PB7/SYI | I/O | | 128 | CS53WRN/RASN/PE7 | O | |

## ● **µPD789022GB-A15-8E** (XZ56010R) **CPU** (KBS)

DMLCD: IC401

| PIN NO. | NAME | I/O | FUNCTION | PIN NO. | NAME | I/O | FUNCTION |
|---|---|---|---|---|---|---|---|
| 1 | P12 | I/O | Port 1 | 23 | P32/INTP2/CPT2 | I/O | Port 3/External interrupt input/Capture edge input |
| 2 | P11 | I/O | | 24 | P31/INTP1 | I/O | Port 3/External interrupt input |
| 3 | P10 | I/O | | 25 | P30/INTP0 | I/O | |
| 4 | P47/KR7 | I/O | Port 4/Key return signal detection input | 26 | P22/RXD/SI0 | I/O | Port 2/Asynchronous serial interface serial data input/Serial interface serial data input |
| 5 | P46/KR6 | I/O | | 27 | P21/TXD/SO0 | I/O | Port 2/Asynchronous serial interface serial data output/Serial interface serial data output |
| 6 | P45/KR5 | I/O | | 28 | P20/ASCK/ISCK0 | I/O | Port 2/Asynchronous serial interface serial clock input/Serial interface serial clock |
| 7 | P44/KR4 | I/O | | 29 | P07 | I/O | Port 0 |
| 8 | P43/KR3 | I/O | | 30 | P06 | I/O | |
| 9 | P42/KR2 | I/O | | 31 | P05 | I/O | |
| 10 | P41/KR1 | I/O | | 32 | P04 | I/O | |
| 11 | P40/KR0 | I/O | | 33 | P03 | I/O | |
| 12 | NC | - | | 34 | P02 | I/O | |
| 13 | IC | - | Internally connected (N.C.) | 35 | P01 | I/O | |
| 14 | X2 | - | Clock | 36 | P00 | I/O | |
| 15 | X1 | I | | 37 | NC | - | |
| 16 | VSS0 | - | Ground | 38 | VDD1 | - | Power supply |
| 17 | VDD0 | - | Power supply | 39 | VSS1 | - | Ground |
| 18 | $\overline{\text{RESET}}$ | I | System reset | 40 | P17 | I/O | Port 1 |
| 19 | P53 | I/O | Port 5 | 41 | P16 | I/O | |
| 20 | P52 | I/O | | 42 | P15 | I/O | |
| 21 | P51 | I/O | Port 5/16-bit timer output | 43 | P14 | I/O | |
| 22 | P50/TI0/TO0 | I/O | Port 5/External count clock input to 8-bit timer/8-bit timer output | 44 | P13 | I/O | |

## ● **AK4385ET** (X6040A01) **DAC** (Digital to Analog Converter)

DMLCD: IC501

| PIN NO. | NAME | I/O | FUNCTION | PIN NO. | NAME | I/O | FUNCTION |
|---|---|---|---|---|---|---|---|
| 1 | MCLK | I | Master Clock | 9 | AOUTR- | O | Rch Analog out(-) |
| 2 | BICK | I | Audio Serial Data Clock | 10 | AOUTR+ | O | Rch Analog out(+) |
| 3 | SDTI | I | Audio Serial Date Input | 11 | AOUTL- | O | Lch Analog out(-) |
| 4 | LRCK | I | L/R Clock | 12 | AOUTL+ | O | Lch Analog out(+) |
| 5 | PDN | I | Power Down mode | 13 | Vss | - | Ground |
| 6 | CSN | I | Chip Select | 14 | VDD | - | Power Supply |
| 7 | CCLK | I | Control Data Input | 15 | DZFR | O | Rch Data Zero Input Detect |
| 8 | CDTI | I | Control Data Input | 16 | DZFL | O | Lch Data Zero Input Detect |

# IC BLOCK DIAGRAM

- **SN74LV32APWR** (X5647A00)
  Quad 2 Input OR
  DMLCD: IC207

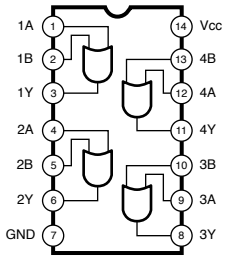


- **SN74AHCT1G08DCKR** (X0158A0R)
  Single 2-Input Positive-AND Gate
  DMLCD: IC402, 403

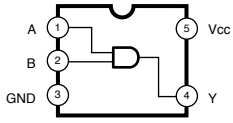


FUNCTION TABLE

| INPUTS | | OUTPUT |
|---|---|---|
| A | B | Y |
| H | H | H |
| L | X | L |
| X | L | L |

- **BA4510F-E2** (X7300A00)
  Dual Operational Amplifier
  DMLCD: IC502

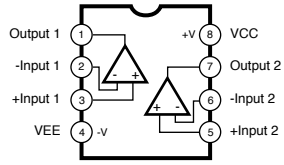


- **LA4625** (XY209A0R)
  Power Amplifier
  AM: IC551

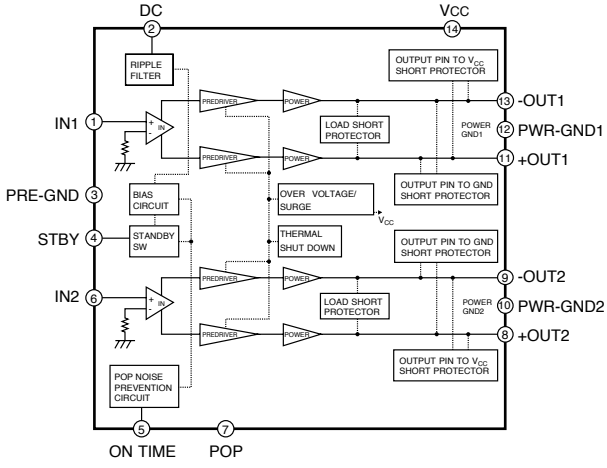

# CIRCUIT BOARDS

**AM (AMJK 1/6) Circuit Board** (X7176H0) ..... 30
**AM (AMJK 4/6) Circuit Board** (X7176H0) ..... 30
**AM (AMJK 5/6) Circuit Board** (X7176H0) ..... 30
**MIDI (AMJK 2/6) Circuit Board** (X7176H0) ..... 23
**PB (AMJK 6/6) Circuit Board** (X7176H0) ..... 26
**DMLCD Circuit Board** (X9195C0) ..... 24/25
**PJK Circuit Board** (X9120C0) ..... 24
**PNL (PN 2/6) Circuit Board** (X7177C0) ..... 26/27
**PNL (PN 4/6) Circuit Board** (X7177C0) ..... 26/27
**PNR (PN 1/6) Circuit Board** (X7177C0) ..... 28/29
**PNR (PN 3/6) Circuit Board** (X7177C0) ..... 28/29
**TWL (PN 5/6, 6/6) Circuit Board** (X7177C0 KBP-500 only) ..... 25
**TWR (PN 5/6, 6/6) Circuit Board** (X7177C0 KBP-500 only) ..... 25
**GHL88L Circuit Board** (X6244D0) ..... 31
**GHL88M Circuit Board** (X6245G0) ..... 32
**GHL88H Circuit Board** (X6246D0) ..... 33

**Note: See parts list for details of circuit board component parts.**

## ● MIDI (AMJK 2/6) Circuit Board

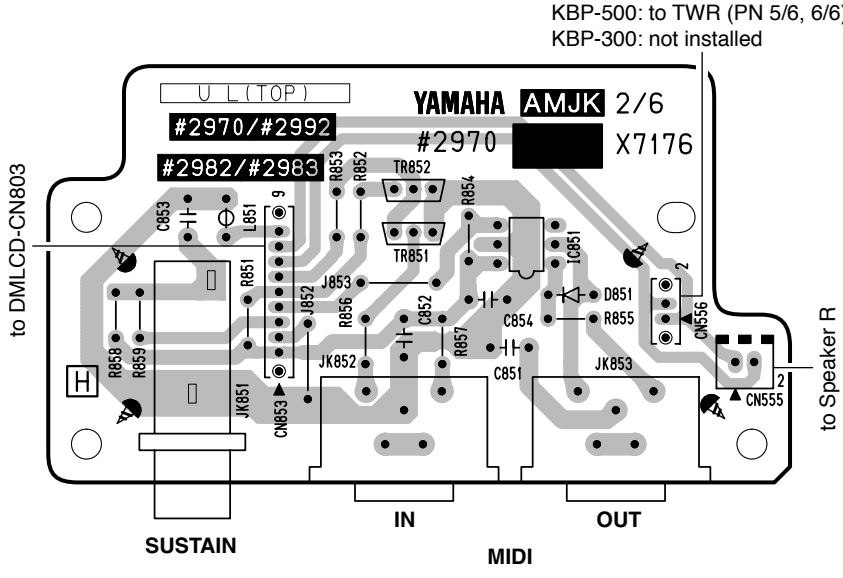


**Component side**

## ● DMLCD Circuit Board

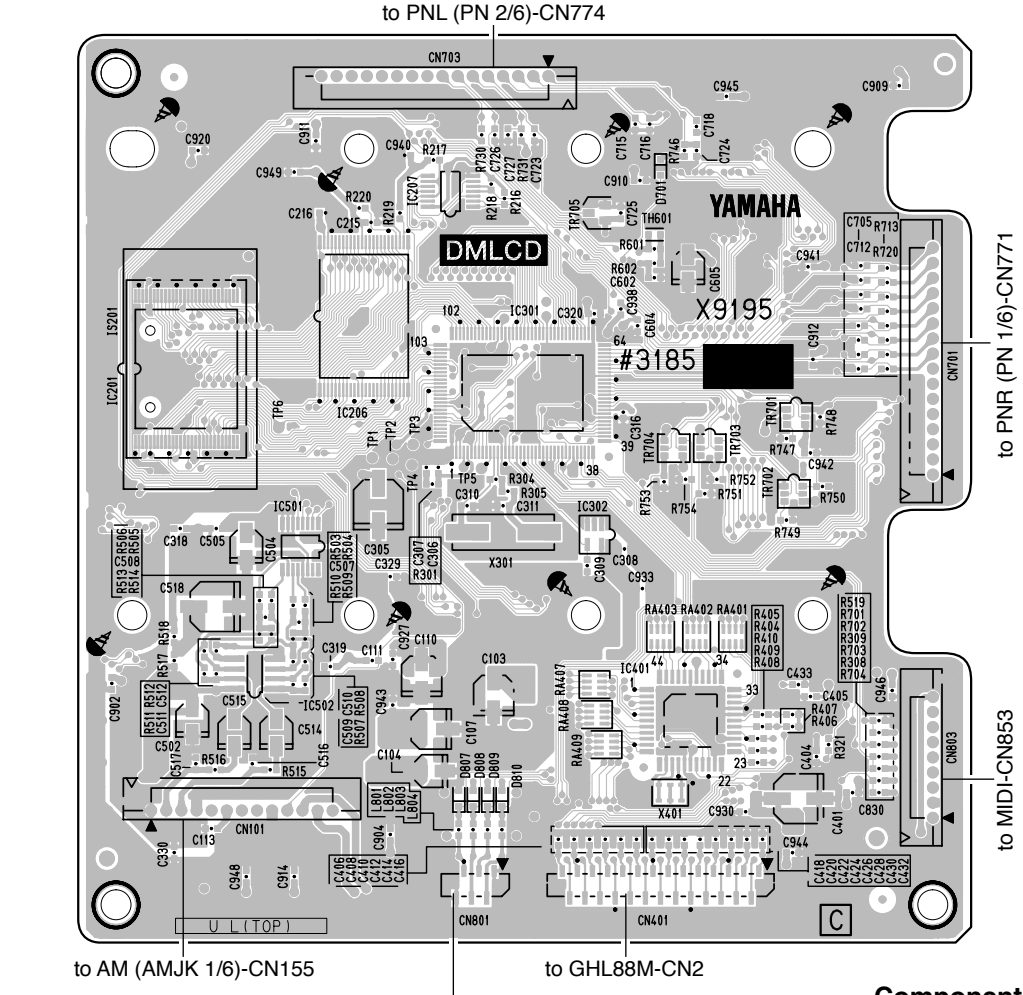


## ● PJK Circuit Board

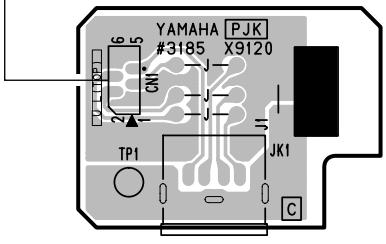


PEDAL UNIT



DMLCD: 2NA-WM29430-1
PJK: 2NA-WK92570-1 ⚠2

## ● DMLCD Circuit Board

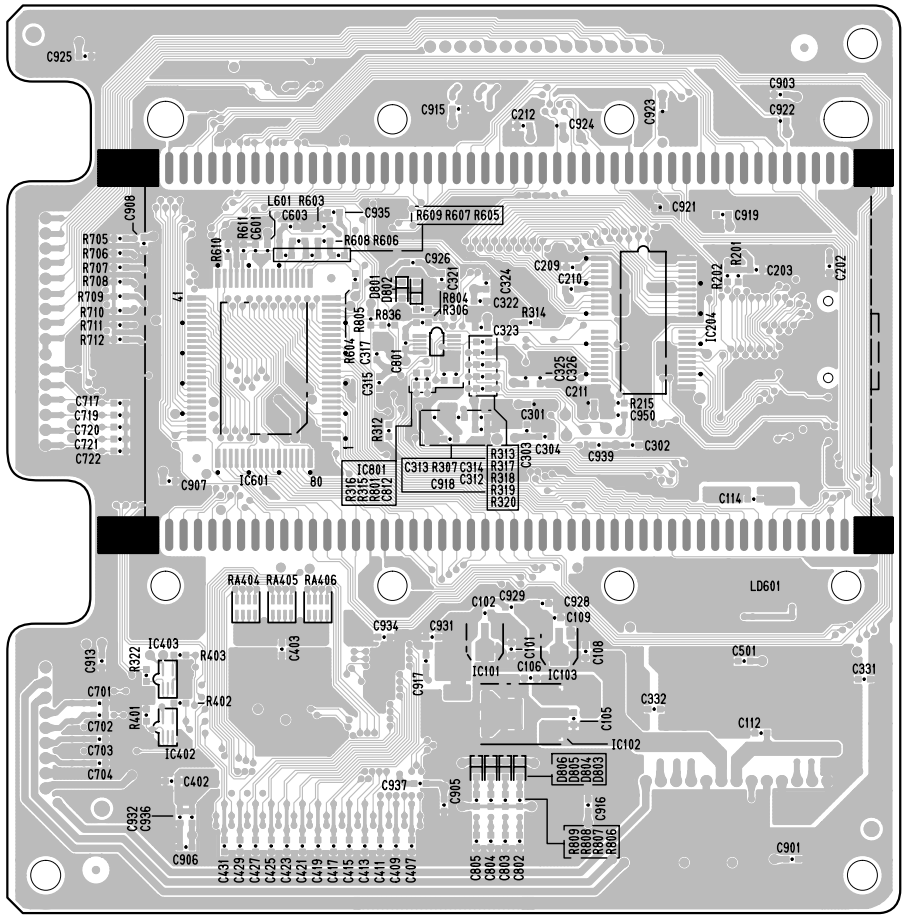

**Pattern side**

## ● TWL, TWR (PN 5/6, 6/6) Circuit Board (KBP-500 only)

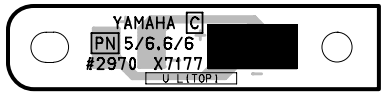


**Component side**

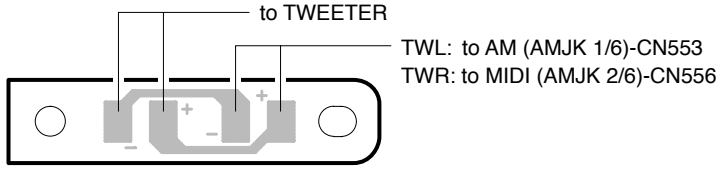


**Pattern side**

DMLCD: 2NA-WM29430
TWL, TWR: 2NA-WG23610-1 ⚠2

## ● PNL (PN 2/6) Circuit Board

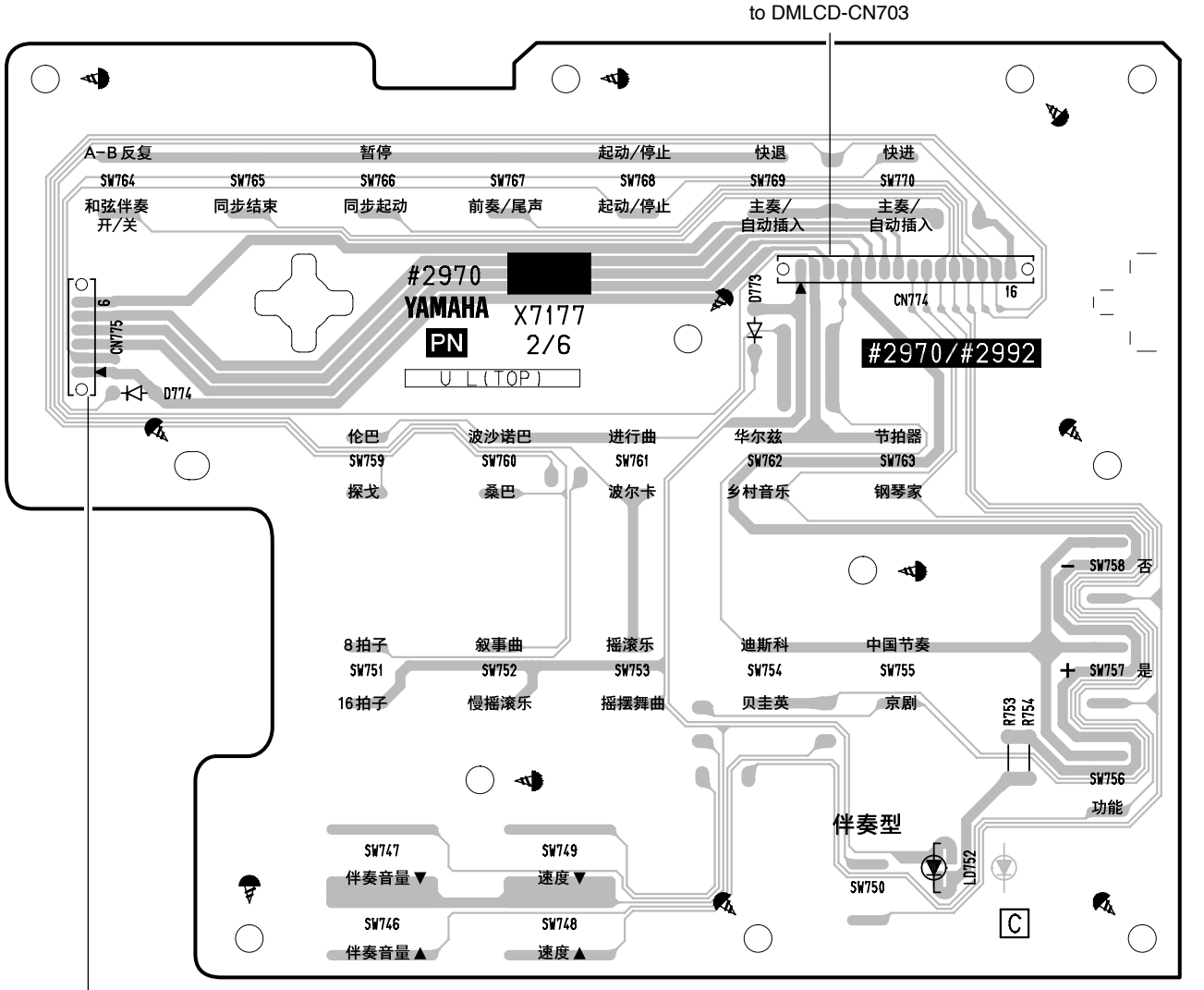


Component side

## ● PNL (PN 4/6) Circuit Board

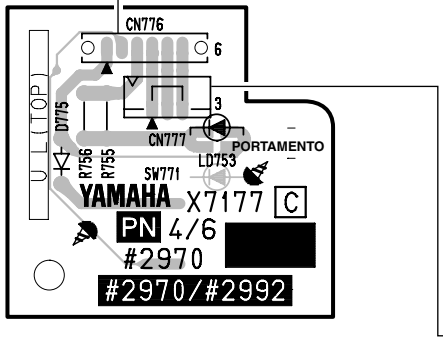


Component side

## ● PB (AMJK 6/6) Circuit Board

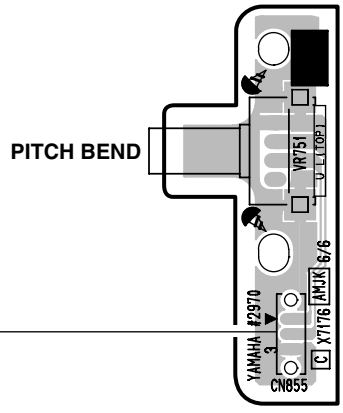


Component side



PB: 2NA-WG23590-1 ⚠5
PNL: 2NA-WG23610-1 ⚠2

## ● PNL (PN 2/6) Circuit Board

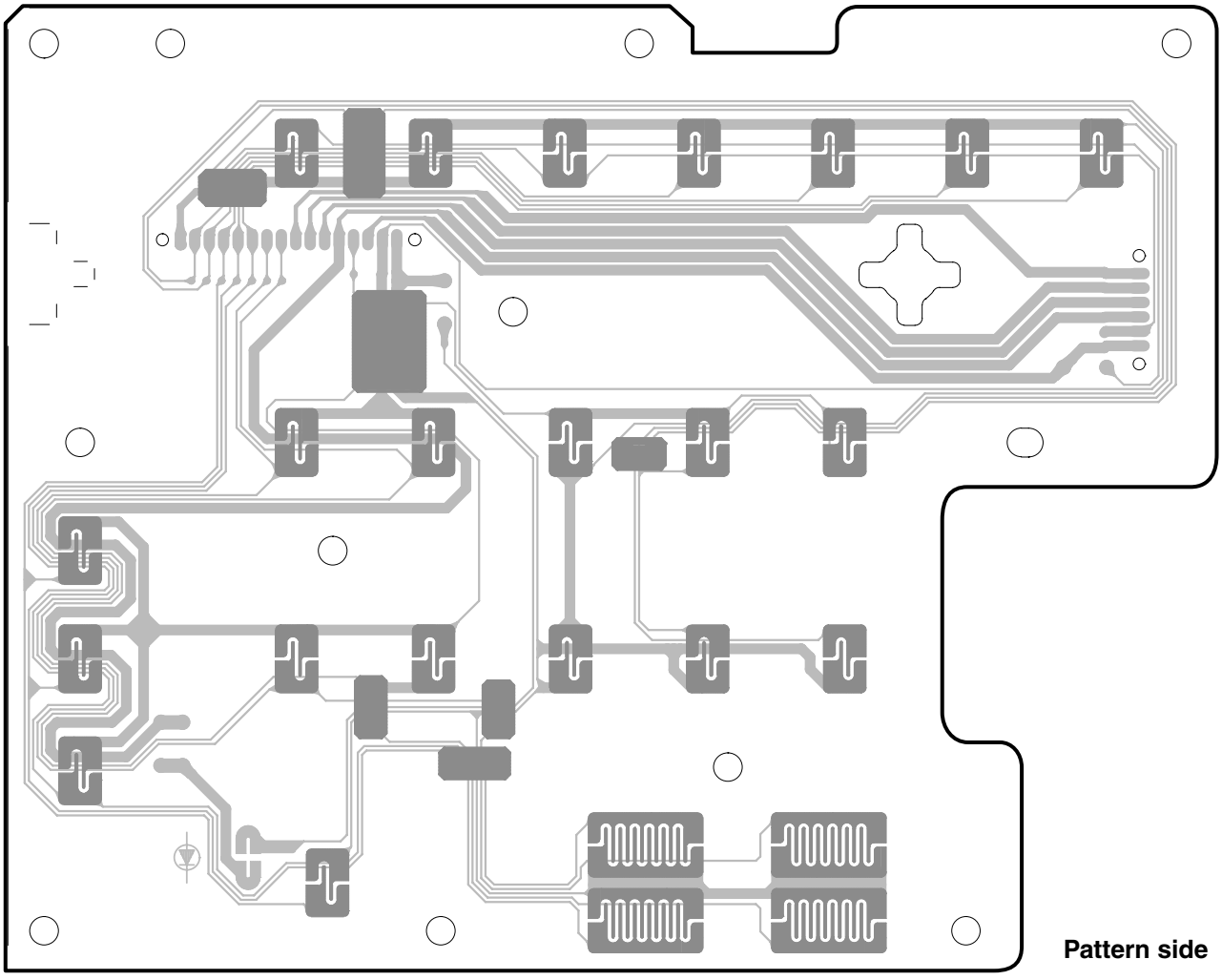

Pattern side

## ● PNL (PN 4/6) Circuit Board

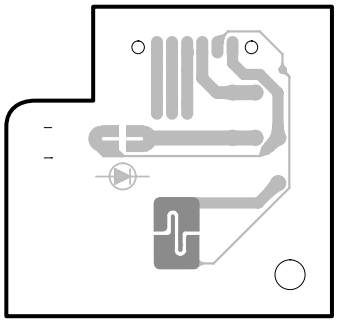

Pattern side

PB: 2NA-WG23590-1 △5
PNL: 2NA-WG23610-1 △2

## ● PNR (PN 1/6) Circuit Board

**Scale: 90/100**

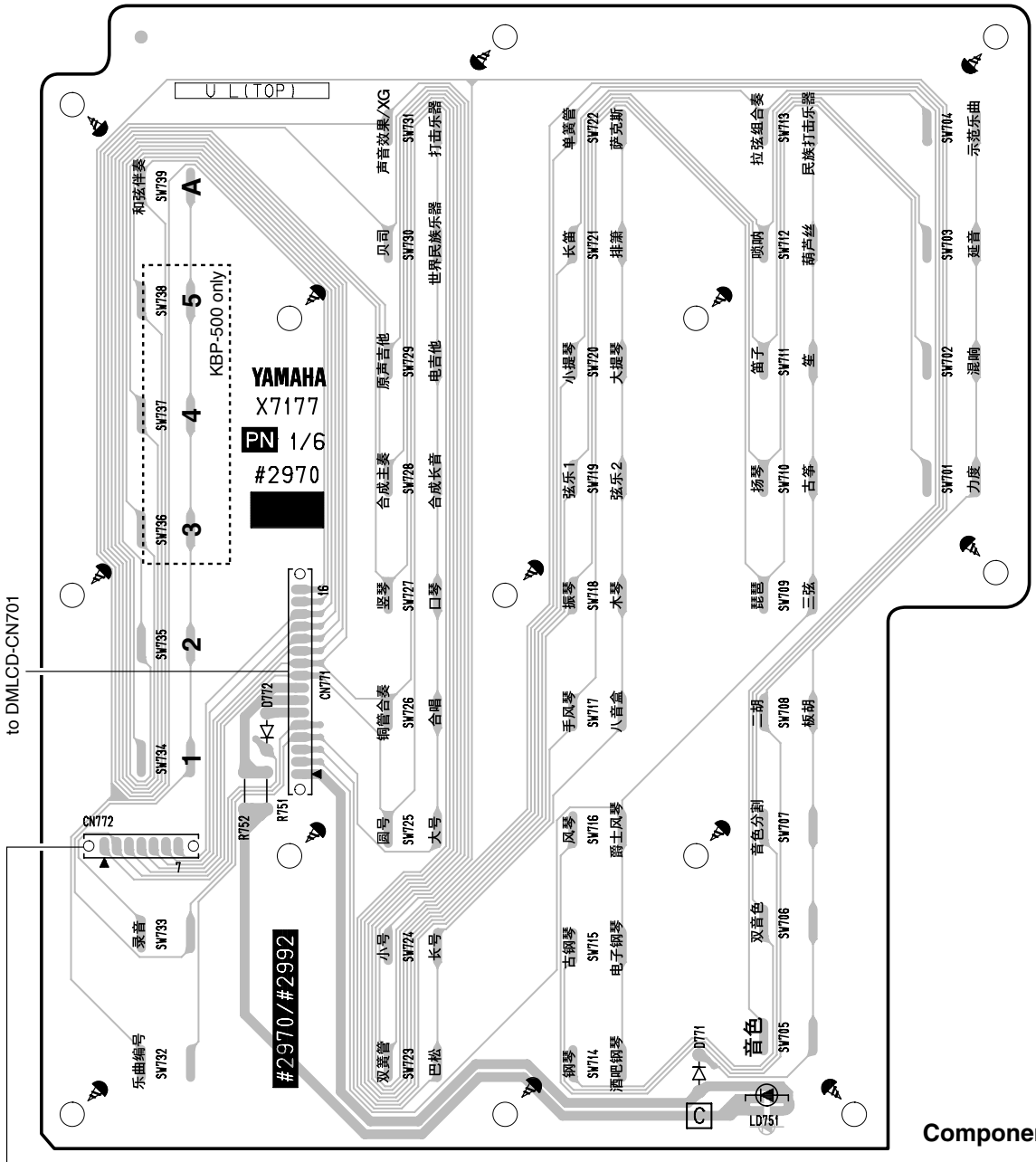


**Component side**

## ● PNR (PN 3/6) Circuit Board

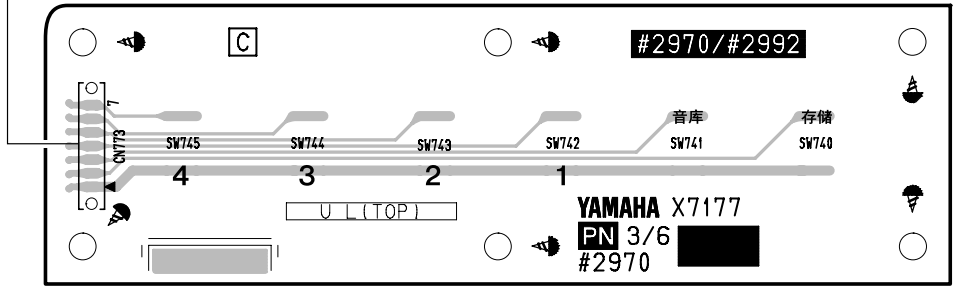


**Component side**

PNR: 2NA-WG23610-1 ⚠2

## ● PNR (PN 1/6) Circuit Board

Scale: 90/100

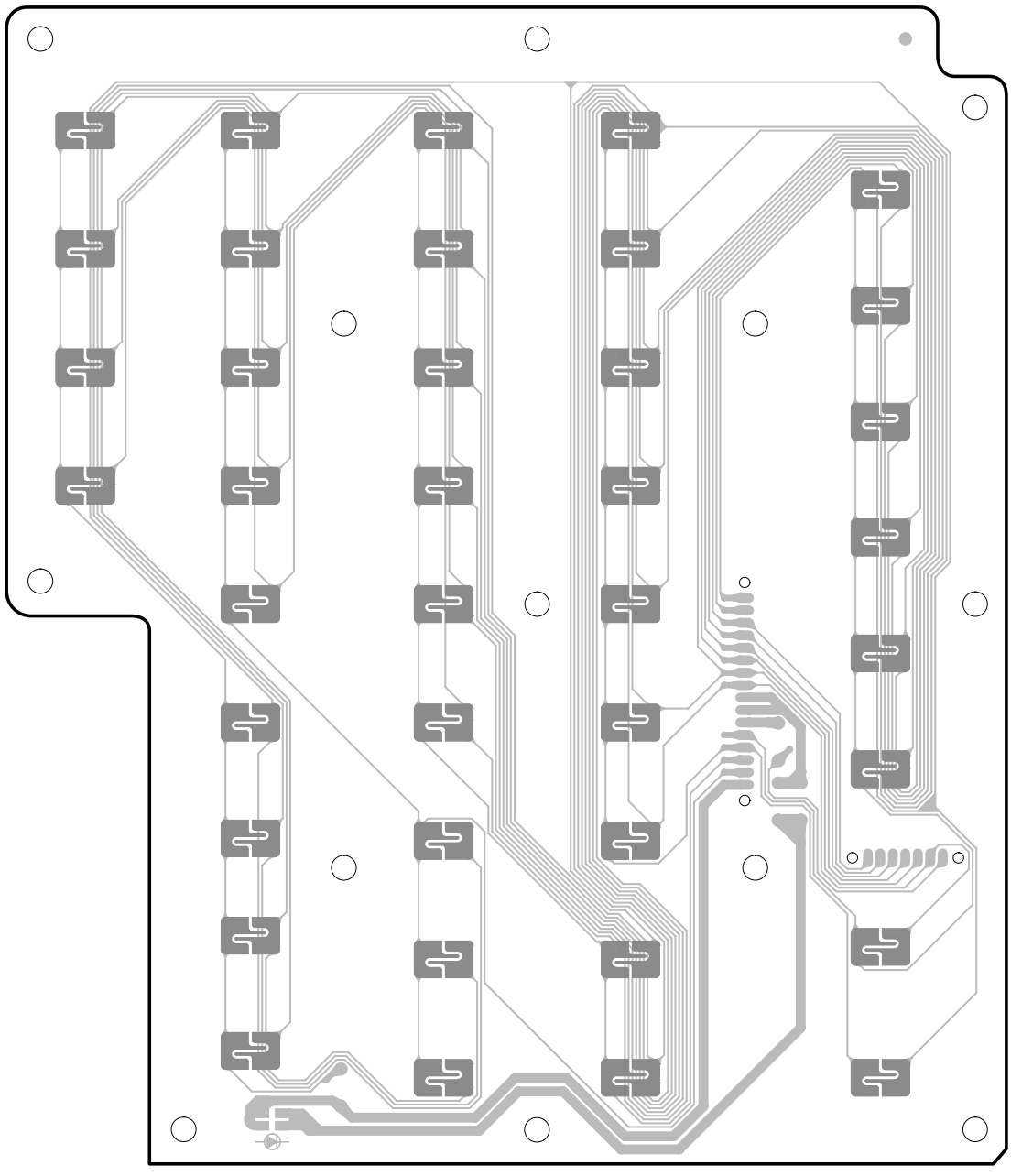

Pattern side

## ● PNR (PN 3/6) Circuit Board

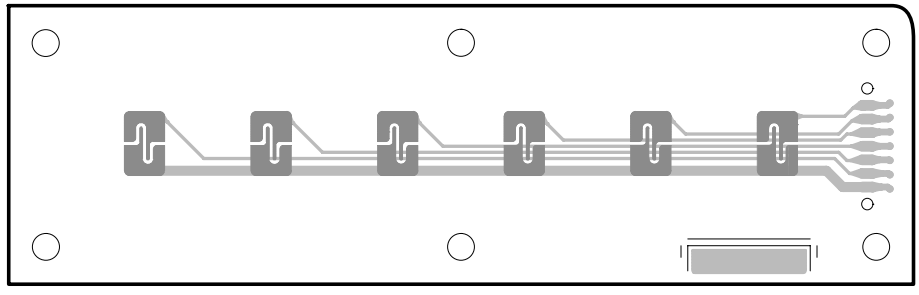

Pattern side

PNR: 2NA-WG23610-1 ⚠2

## ● AM (AMJK 1/6) Circuit Board

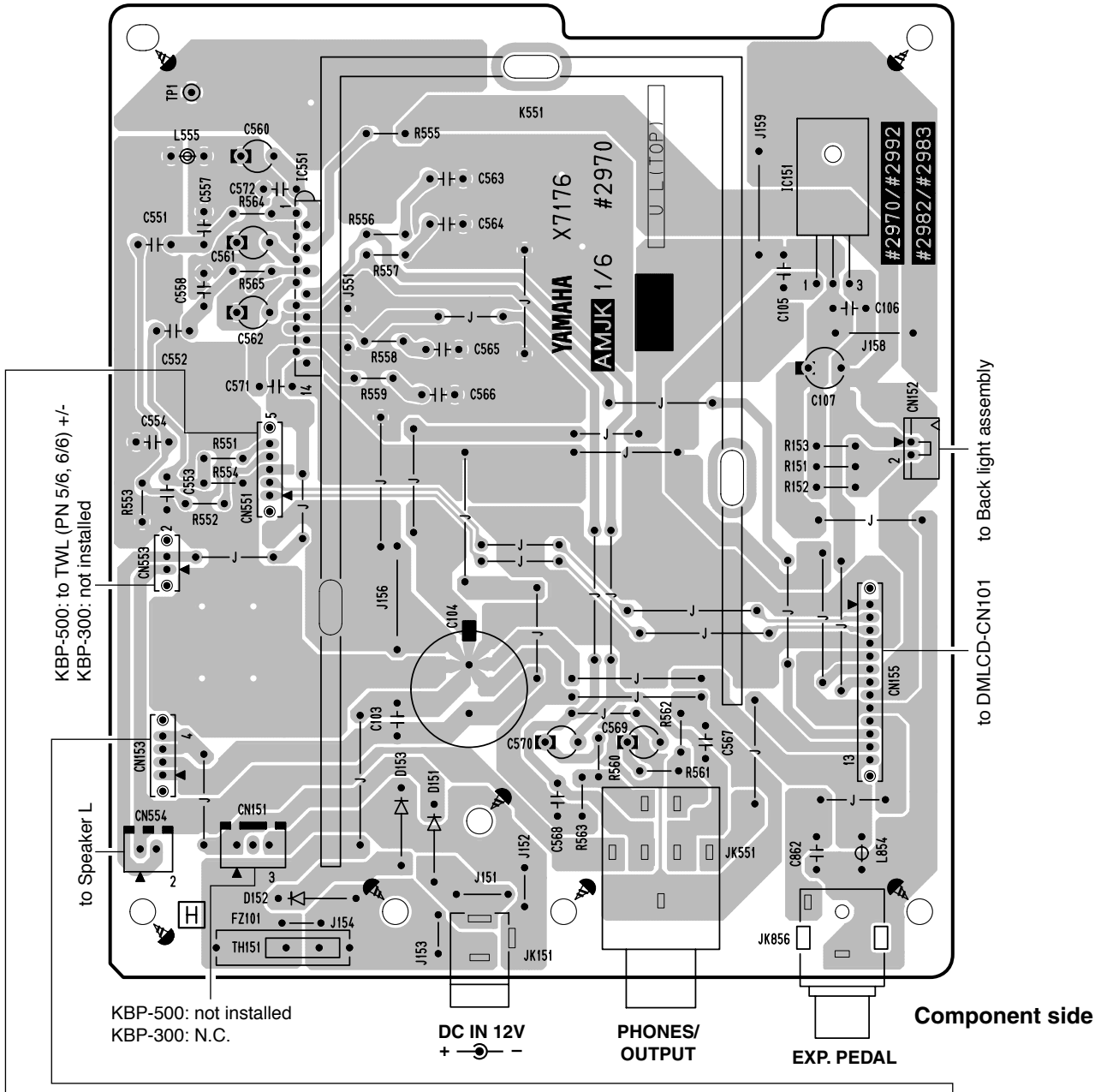


## ● AM (AMJK 4/6) Circuit Board

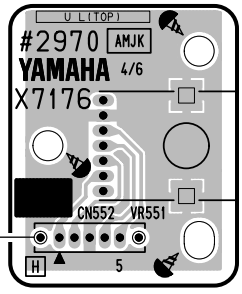


## ● AM (AMJK 5/6) Circuit Board

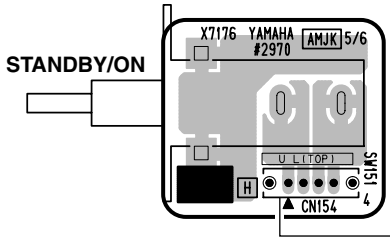




AM: 2NA-WG23590-1 5

## ● GHL88L Circuit Board

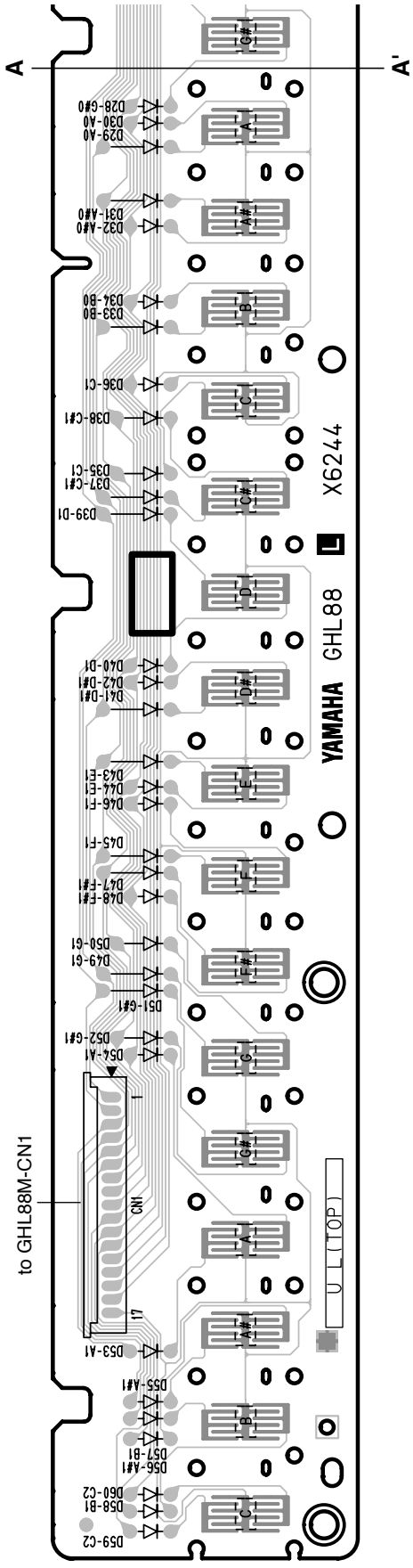


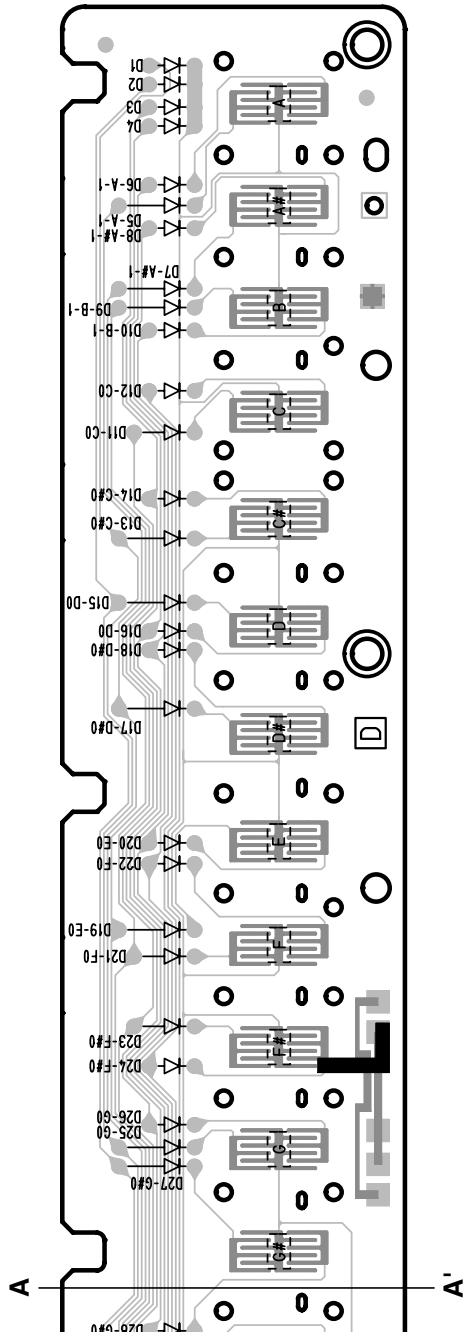


**Component side**

GHL88L: 2NAK8-WF46230

## ● GHL88M Circuit Board

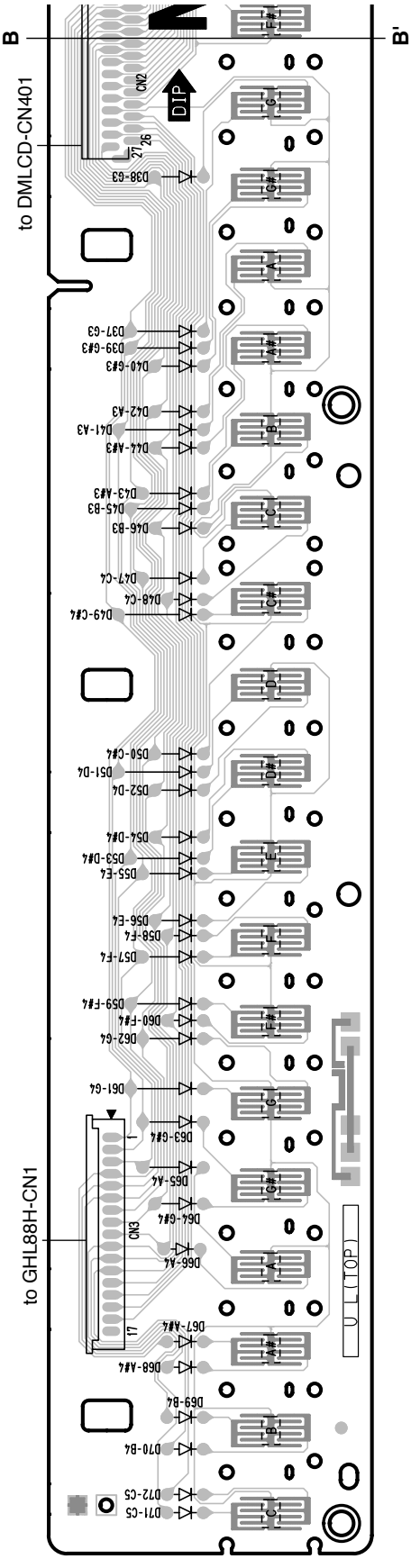


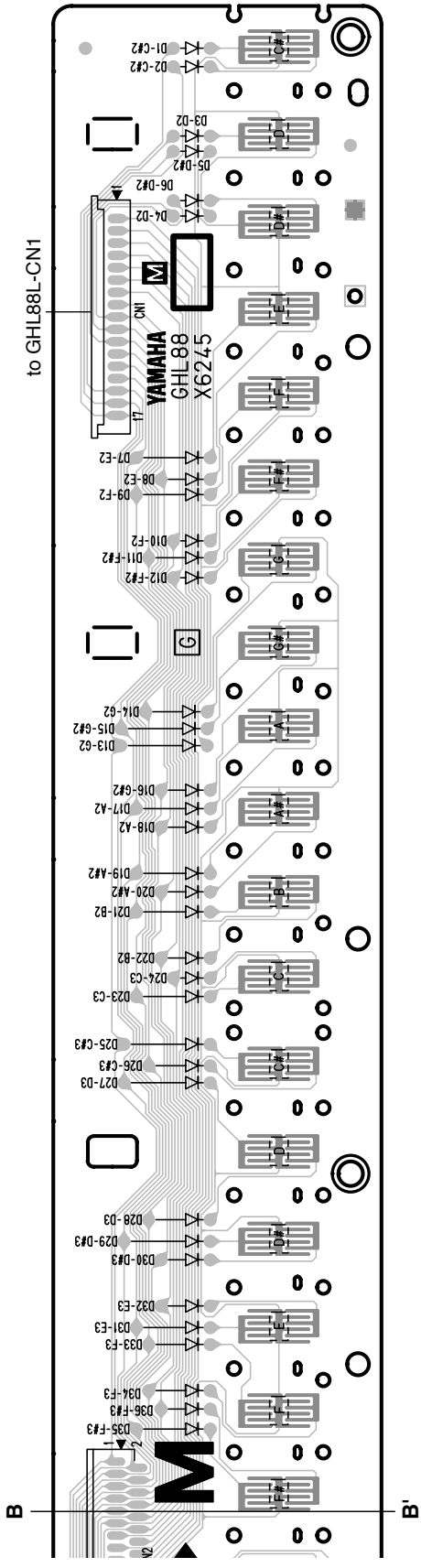


**Component side**

GHL88M: 2NAK8-WF46240 ⚠2

## ● GHL88H Circuit Board

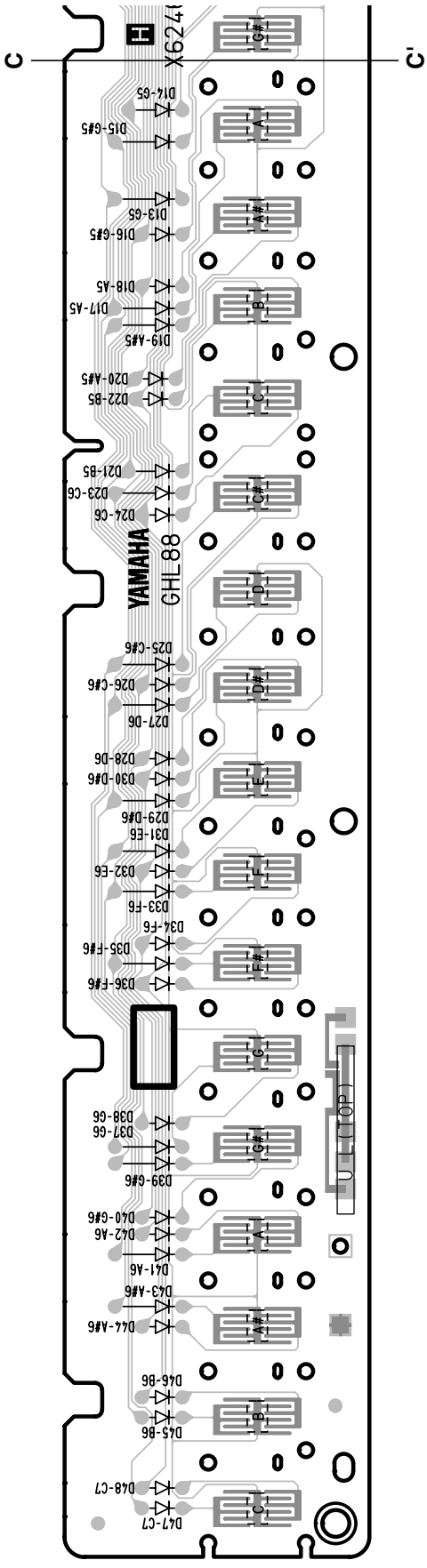


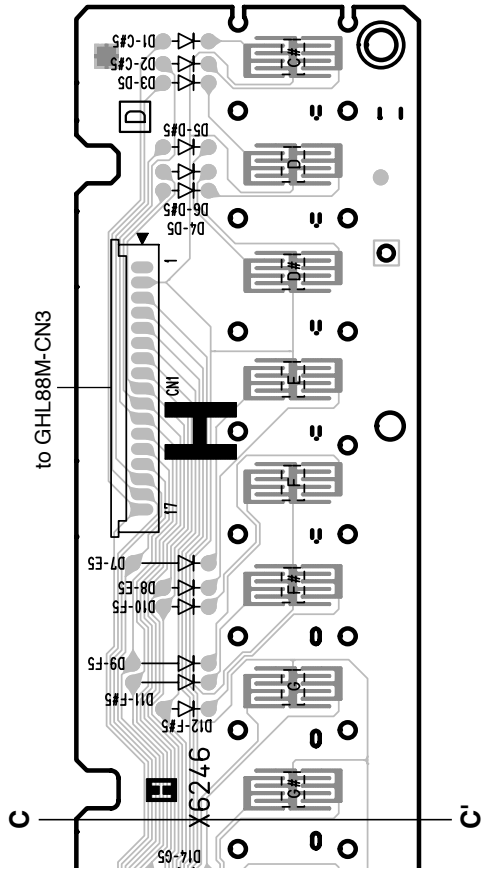


**Component side**

GHL88H: 2NAK8-WF46250

# TEST PROGRAM

*** If the test number 47 "Factory Set" is executed, the data already set will be lost.**

## 1 Preparations

1) Use an AC adaptor PA-5D.
2) Measuring device: Frequency counter, which can detect thousandth value or more, Level meter (with JIS-C filter), Oscilloscope
   Note: Use a stereo plug and connect a load resistor of 33 Ω to the [PHONES/OUTPUT] jack for measurement unless otherwise specified. Input impedance of the measuring device should be 1 MΩ or more.
3) Jig: Foot switch (FC-4 or FC-5), MIDI cable, Pedal unit, EXP pedal

## 2 Starting up the test program

While holding down the keys [C#2], [F2] and [G#2] simultaneously, press the [STANDBY/ON] switch.

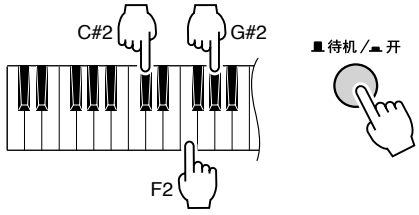


## 3 Test procedure

1) When the test program is started, "**TEST**" will be displayed on the LCD.
2) Press the [-] or [+] button of the number buttons to select a test program item.
3) Press the [START/STOP] button to execute the test.

**If the result is OK or test item is completed,** press the [START/STOP] button again to return to the item selection display.
Press the [-] or [+] button of the number buttons to select the next test item.
A cursor ("_") is shown below the first character of the item for which the test results are OK.

**If the result is NG,** press the lowest key (white key C1) to return to the item selection display.

## 4 Test program list

(dBu = dBm)

| TEST No | LCD display | Test descriptions, judging conditions, etc. |
|---|---|---|
| 1 | **Version**<br>**001** | Displays version of the ROM.<br>"**Prog** ∗∗∗" is displayed on the LCD. ∗∗∗ : Version |
| 2 | **Rom Chk1**<br>**002** | Checks the ROM connected to the CPU bus.<br>Make sure that "**Rom OK**" is displayed on the LCD. |
| 3 | **Ram Chk1**<br>**003** | Checks the RAM connected to the CPU bus.<br>Make sure that "**Ram OK**" is displayed on the LCD. |
| 6 | **FRomChk1**<br>**006** | Checks the FROM connected to the CPU bus.<br>Make sure that "**FRom OK**" is displayed on the LCD. |
| 11 | **TG1 Chk**<br>**011** | Plays each key automatically in the order of scale (auto-scaling). (32 notes from C2 to G4 will be played.)<br>Make sure that there is no abnormal sounds or noise. When the auto-scaling is finished, "**TG1 End**" will be shown. Press a key to play a sound. (Single note, the key pressed first will be played) |
| 13 | **Pit Chk**<br>**013** | Checks pitch accuracy.<br>Connect the frequency counter to the [PHONES/OUTPUT] jack. (Either L or R)<br>Make sure that the correct signal is output. (440.14 Hz ± 0.22 Hz) |
| 14 | **Output R**<br>**014** | Connect the level meter (with JIS-C filter) to the L/R of the [PHONES/OUTPUT] jack.<br>(33 Ω load)<br>Set the [MASTER VOLUME] to the maximum level and check the output level.<br>· PHONES L: -55.0 dBu or less · PHONES R: -4.5 dBu ± 2 dB |
| 15 | **Output L**<br>**015** | Connect the level meter (with JIS-C filter) to the L/R of the [PHONES/OUTPUT] jack.<br>(33 Ω load)<br>Set the [MASTER VOLUME] to the maximum level and check the output level.<br>· PHONES L: -4.5 dBu ± 2 dB · PHONES R: -55.0 dBu or less |

| TEST No | LCD display | Test descriptions, judging conditions, etc. |
|---|---|---|
| **20** | **SW Chk**<br>**020** | Checks the switches and LEDs on the panel. Press the switches as shown in the LCD. When a switch is pressed, a sound is played at the prescribed pitch. (Refer to the Switch test item list on the next page.) When a switch with LED is turned on, the LED will light up.<br>Make sure that "**SW OK**" is displayed on the LCD when all the switches are pressed as indicated.<br>To cancel the operation halfway, press the lowest key (white key C1) to return to the item selection display. |
| **21** | **A. LedChk**<br>**021** | Make sure that all the LEDs on the panel are turned on. |
| **28** | **LCD On**<br>**028** | Make sure that all the dots on the LCD are turned on. |
| **29** | **LCD Off**<br>**029** | Make sure that all the dots on the LCD are turned off. |
| **31** | **PD1 Chk**<br>**031** | Connect the pedal unit to the [PEDAL UNIT] jack.<br>Press the [START/STOP] button to start the test and C3 sound will be produced. (Pedal OFF) When the soft pedal is depressed, C4 sound will be produced and the C4 sound will stop when the pedal is released.<br>Make sure that "**PD1 OK**" is displayed on the LCD. |
| **32** | **PD2 Chk**<br>**032** | Connect the pedal unit to the [PEDAL UNIT] jack.<br>Press the [START/STOP] button to start the test and C3 sound will be produced. (Pedal OFF) When the sostenuto pedal is depressed, C4 sound will be produced and the C4 sound will stop when the pedal is released.<br>Make sure that "**PD2 OK**" is displayed on the LCD. |
| **33** | **PD3 Chk**<br>**033** | Connect the pedal unit to the [PEDAL UNIT] jack.<br>Press the [START/STOP] button to start the test and C3 sound will be produced. (Pedal OFF) G4 sound will be produced when the damper pedal is at HALF position.<br>When the damper pedal is depressed, C4 sound will be produced and the C4 sound will stop when the pedal is released.<br>Make sure that "**PD3 OK**" is displayed on the LCD. |
| **34** | **PD4 Chk**<br>**034** | Connect a footswitch (FC-4 or FC-5) to the [SUSTAIN] jack.<br>Make sure that C3 is played when the [START/STOP] button is pressed while the pedal is depressed (ON), and that C4 is played when the pedal is released (OFF). The sound will stop when the pedal is depressed again.<br>Make sure that "**PD4 OK**" is displayed on the LCD. |
| **35** | **Exp Chk**<br>**035** | Connect the Exp pedal to the [EXPRESSION] jack.<br>Press the [START/STOP] button to start the test and make sure that C3 is played when the pedal is depressed (On), and that C4 is played when the pedal is released (Off).<br>Make sure that "**Exp OK**" is displayed on the LCD. |
| **36** | **PB Chk**<br>**036** | C3 is played when the [PITCH BEND] wheel is turned toward you to the minimum position (DW), and C4 is played when the wheel is turned away from you to the maximum position (UP).<br>Make sure that "**PB OK**" is displayed on the LCD. |
| **37** | **MIDI Chk**<br>**037** | Connect the [MIDI IN] terminal and [MIDI OUT] terminal with a MIDI cable and then execute the test.<br>Make sure that C4 is played and that "**MIDI OK**" is displayed on the LCD. |
| **41** | **Rom Chk2**<br>**041** | Checks the ROM connected to the CPU bus.<br>Make sure that "**Rom OK**" is displayed on the LCD.<br>It will take about 25 seconds for the check. |
| **42** | **Ram Chk2**<br>**042** | Checks the RAM connected to the CPU bus.<br>Make sure that "**Ram OK**" is displayed on the LCD. |
| **45** | **FRomChk2**<br>**045** | Checks the FROM connected to the CPU bus.<br>Make sure that "**FRom OK**" is displayed on the LCD.<br>It will take about 30 seconds for the check. |
| **47** | **Factory**<br>**047** | Initializes the entire backup area to reset to the factory default.<br>"**Fact**" is displayed on the LCD during the test.<br>"**Fact End**" is displayed on the LCD when the test is finished. |
| **48** | **TestExit**<br>**048** | This will leave the test program and change to the play mode. |

## ● Other Tests

### Noise Level Check

Connect the level meter (with JIS-C filter) to the L/R of the [PHONES/OUTPUT] jack. (33 Ω load)
Set the [MASTER VOLUME] to the maximum level and check the noise level.
· PHONES L, R: -78 dBu or less

**Switch test item list**

| Turn | SW Name | LCD Display | Note Number |
|---|---|---|---|
| 1 | Acmp Vol ▲ | A-VOL UP | C2 |
| 2 | Acmp Vol ▼ | A-VOL DW | C#2 |
| 3 | Tempo ▲ | TEMPO UP | D2 |
| 4 | Tempo ▼ | TEMPO DW | D#2 |
| 5 | Style A/B | Style AB | E2 |
| 6 | 8BEAT | 8BEAT | F2 |
| 7 | BALLAD | BALLAD | F#2 |
| 8 | ROCK | ROCK | G2 |
| 9 | DISCO | DISCO | G#2 |
| 10 | DG WUSHI | DG WUSHI | A2 |
| 11 | RUMBA | RUMBA | A#2 |
| 12 | BOSSANVA | BOSSANVA | B2 |
| 13 | MARCH | MARCH | C3 |
| 14 | WALTZ | WALTZ | C#3 |
| 15 | METRO. | METRO. | D3 |
| 16 | FUNCTION | Function | D#3 |
| 17 | +/YES | +/YES | E3 |
| 18 | -/NO | -/NO | F3 |
| 19 | TOUCH | Touch | F#3 |
| 20 | REVERB | Reverb | G3 |
| 21 | SUSTAIN | Sustain | G#3 |
| 22 | DEMO | Demo | A3 |
| 23 | VOICE A/B | Voice AB | A#3 |
| 24 | DUAL | Dual | B3 |
| 25 | SPLIT | Split | C4 |
| 26 | ERHU | ERHU | C#4 |
| 27 | PIPA | PIPA | D4 |
| 28 | YANGQIN | YANGQIN | D#4 |
| 29 | DIZI | DIZI | E4 |
| 30 | SUONA | SUONA | F4 |
| 31 | ENSEMBLE | ENSEMBLE | F#4 |
| 32 | PIANO | PIANO | G4 |
| 33 | HARPSI. | HARPSI. | G#4 |
| 34 | C.ORGAN | C.ORGAN | A4 |
| 35 | ACCORD | ACCORD | A#4 |
| 36 | VIBES | VIBES | B4 |
| 37 | STRINGS1 | STRINGS1 | C5 |
| 38 | VIOLIN | VIOLIN | C#5 |

| Turn | SW Name | LCD Display | Note Number |
|---|---|---|---|
| 39 | FLUTE | FLUTE | D5 |
| 40 | CLARINET | CLARINET | D#5 |
| 41 | OBOE | OBOE | E5 |
| 42 | TRUMPET | TRUMPET | F5 |
| 43 | HORN | HORN | F#5 |
| 44 | BRASS | BRASS | G5 |
| 45 | HAHP | HAHP | G#5 |
| 46 | SYN LEAD | SYN LEAD | A5 |
| 47 | ACO.GTR | ACO.GTR | A#5 |
| 48 | BASS | BASS | B5 |
| 49 | SE/XG | SE/XG | C6 |
| 50 | ACMP | ACMP | C#6 |
| 51 | SYNCRO STOP | S.Stop | D6 |
| 52 | SYNCRO START | S.Start | D#6 |
| 53 | INTRO/ENDING | intro | E6 |
| 54 | START/STOP | Str/Stp | F6 |
| 55 | MAIN A | Main A | F#6 |
| 56 | MAIN B | Main B | G6 |
| 57 | MEMORY | Memory | G#6 |
| 58 | BANK | Bank | A6 |
| 59 | REGIST 1 | Regist 1 | A#6 |
| 60 | REGIST 2 | Regist 2 | B6 |
| 61 | REGIST 3 | Regist 3 | C7 |
| 62 | REGIST 4 | Regist 4 | C#7 |
| 63 | SONG NO. | Song No. | D7 |
| 64 | REC | REC | D#7 |
| 65 | SONG 1 | Song 1 | E7 |
| 66 | SONG 2 | Song 2 | F7 |

KBP-500

| | | | |
|---|---|---|---|
| 67 | SONG 3 | Song 3 | F#7 |
| 68 | SONG 4 | Song 4 | G7 |
| 69 | SONG 5 | Song 5 | G#7 |
| 70 | SONG A | Song A | A7 |
| 71 | PORTAMENTO | Portamen | A#7 |

KBP-300

| | | | |
|---|---|---|---|
| 67 | SONG A | Song A | F#7 |
| 68 | PORTAMENTO | Portamen | G7 |

# ■ INITIALIZATION

若要初始化所有数据并恢复出厂预设状态，同时按住键盘上最高 （最靠右）的白键和最高的三个黑键并接通电源。显示器上将出现 “FlashCLr”。

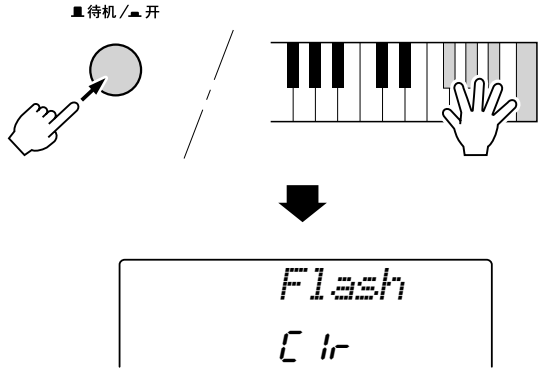


⚠ 小心

- *在执行数据初始化程序时，所有的注册存储和用户乐曲数据，以及上面列出的其它设定都会被擦除，且/或被改变。*
- *如果乐器发生死机，或不管出于什么原因开始出现异常，通过执行数据初始化程序，通常可以使之恢复正常操作。*

# MIDI IMPLEMENTATION CHART

YAMAHA [ Digital Keyboard ] Date:21-SEP-2007
Model KBP-500/KBP-300 MIDI Implementation Chart Version:1.0

| Function... | Transmitted | Recognized | Remarks |
|---|---|---|---|
| Basic Default | 1 - 16 | 1 - 16 | |
| Channel Changed | x | x | |
| Default | 3 | 3 | |
| Mode Messages | x | x | |
| Altered | ********** | x | |
| Note | 0 - 127 | 0 - 127 | |
| Number : True voice | ********** | 0 - 127 | |
| Velocity Note ON | o 9nH,v=1-127 | o 9nH,v=1-127 | |
| Note OFF | x 9nH,v=0 | x | |
| After Key's | x | x | |
| Touch Ch's | x | x | |
| Pitch Bend | o 0 - 24 semi | o 0 - 24 semi | |
| 0,32 | o | o | Bank Select |
| 1,11 | x *1 | o | |
| 5,65,84 | o | o | |
| 6,38 | o | o | Data Entry |
| Control 7,10 | o | o | |
| 64 | o | o | Sustain |
| Change 71-74 | x *1 | o | Sound Controller |
| 91,93 | o | o | Effect Depth |
| 96-97 | x *1 | o | RPN Inc,Dec |
| 100-101 | o | o | RPN LSB,MSB |
| Prog | o 0 - 127 | o 0 - 127 | |
| Change : True # | ********** | | |
| System Exclusive | o | o | |
| : Song Pos. | x | x | |
| Common : Song Sel. | x | x | |
| : Tune | x | x | |
| System : Clock | o | o | |
| Real Time: Commands | o | o | |
| Aux :All Sound OFF | x | o(120,126,127) | |
| :Reset All Cntrls | x | o(121) | |
| :Local ON/OFF | x | o(122) | |
| :All Notes OFF | x | o(123-125) | |
| Mes- :Active Sense | o | o | |
| sages:Reset | x | x | |

*1 *这些控制转换编号的信息无法从本乐器自身传送。不过，在演奏自动伴奏、乐曲或使用和声效果时，可能会传送这些信息。*

Mode 1 : OMNI ON , POLY Mode 2 : OMNI ON ,MONO o : Yes
Mode 3 : OMNI OFF, POLY Mode 4 : OMNI OFF,MONO x : No

# ■ MIDI DATA FORMAT

注：

1 默认情况下（工厂设置），本乐器通常用作 16 通道多乐器音源发生器，外来的数据不影响面板音色或面板设置。不过，下文列出的 MIDI 信息却会影响到面板音色、自动伴奏及乐曲。
- MIDI 主微调
- 用于改变混响类型、叠奏类型的系统专用信息。

2 这些控制转换编号的信息无法从本乐器自身传送。不过，在演奏自动伴奏、乐曲或使用和声效果时，可能会传送这些信息。

3 专用
<GM 系统开启 > F0H、 7EH、 7FH、 09H、 01H、 F7H
- 此信息自动恢复乐器的所有默认设置，只有 MIDI 主微调除外。

<MIDI 主音量 > F0H、 7FH、 7FH、 04H、 01H、 ll、 mm、 F7H
- 此信息可用于同时改变所有通道的音量（通用系统专用信息）。
- “mm”的值用于 MIDI 主音量。（“ll”的值会被忽略）。

<MIDI 主微调 > F0H、 43H、 1nH、 27H、 30H、 00H、 00H、 mm、 ll、 cc、 F7H
- 此信息同时改变所有通道的微调值。
- “mm”和 “ll”的值用于 MIDI 主微调。
- “mm”和 “ll”的默认值分别是 08H 和 00H。 “n”和 “cc”可使用任何数值。

< 混响类型 > F0H、 43H、 1nH、 4CH、 02H、 01H、 00H、 mmH、 llH、 F7H
- mm : 混响类型 MSB
- ll：混响类型 LSB

如需有关详细信息，请参阅下面的效果对应表。

< 叠奏类型 >F0H、 43H、 1nH、 4CH、 02H、 01H、 20H、 mmH、 llH、 F7H
- mm : 叠奏类型 MSB
- ll：叠奏类型 LSB

如需有关详细信息，请参阅下面的效果对应表。

4 伴奏开始时，会传送一则 FAH 信息。伴奏停止时，会传送一则 FCH 信息。时钟设置为外部时， FAH（伴奏开始）和 FCH（伴奏停止）同时都可以识别。

5 本机开 / 关
< 本机开 > Bn、 7A、 7F
< 本机关 > Bn、 7A、 00
“n”的值会被忽略。

## ■ 效果对应表

* 接收到没有对应效果类型的类型 LSB 值时，会自动设置为同效果类型（最接近指定的值）对应的值。
* 效果类型名称前面括号中的数字会对应到显示器中显示的数字。

### ● 混响

| TYPE MSB | TYPE LSB | | | | | | | | |
|---|---|---|---|---|---|---|---|---|---|
| | 00 | 01 | 02 | 08 | 16 | 17 | 18 | 19 | 20 |
| 000 | 无效果 | | | | | | | | |
| 001 | (01)Hall 1 | | | | (02) Hall 2 | (03) Hall 3 | | | |
| 002 | Room | | | | | (04) Room 1 | | (05) Room 2 | |
| 003 | Stager | | | | (06) Stage 1 | (07) Stage 2 | | | |
| 004 | Plate | | | | (08) Plate 1 | (09) Plate 2 | | | |
| 005...127 | 无效果 | | | | | | | | |

### ● 叠奏

| TYPE MSB | TYPE LSB | | | | | | | | |
|---|---|---|---|---|---|---|---|---|---|
| | 00 | 01 | 02 | 08 | 16 | 17 | 18 | 19 | 20 |
| 000...063 | 无效果 | | | | | | | | |
| 064 | Thru | | | | | | | | |
| 065 | Chorus | | (02) Chorus 2 | | | | | | |
| 066 | Celeste | | | | | (01) Chorus 1 | | | |
| 067 | Flanger | | | (03) Flanger 1 | | (04) Flanger 2 | | | |
| 068...127 | 无效果 | | | | | | | | |

# DIGITAL KEYBOARD

# KBP-500
# KBP-300

# PARTS LIST

## ■ CONTENTS


OVERALL ASSEMBLY ..... 2
STAND ASSEMBLY ..... 5
LOWER CASE ASSEMBLY ..... 6
GHL KEYBOARD ASSEMBLY A ..... 8
ELECTRICAL PARTS ..... 10-16


## ■ WARNING

Components having special characteristics are marked ⚠ and must be replaced with parts having specification equal to those originally installed.

- The numbers “QTY” show quantities for each unit.
- The parts with “--” in “PART NO.” are not available as spare parts.
- This mark “ } ” in the REMARKS column means these parts are interchangeable.
- The second letter of the shaded ( ) part number is O, not zero.
- The second letter of the shaded ( ) part number is I, not one.

# OVERALL ASSEMBLY

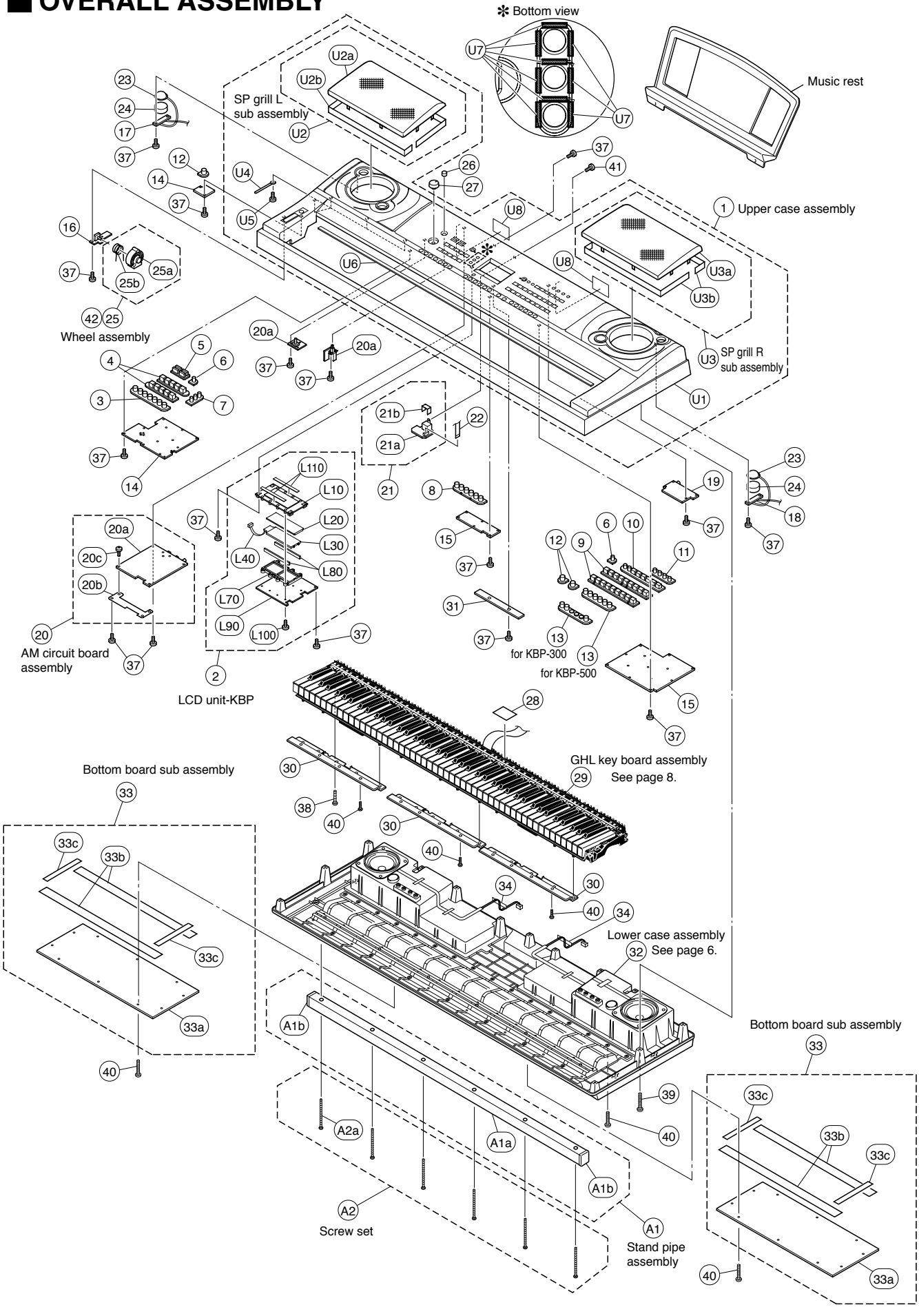

| | REF NO. | PART NO. | DESCRIPTION | | 部品名 | REMARKS | QTY | RANK |
|---|---|---|---|---|---|---|---|---|
| | | | OVERALL ASSEMBLY | | 総組立 | KBP-500/KBP-300 | | |
| | | -- | OVERALL ASSEMBLY | CHN | 総組立 | KBP-500 (WM44680) | | |
| | | -- | OVERALL ASSEMBLY | CHN | 総組立 | KBP-300 (WM44690) | | |
| | 1 | -- | UPPER CASE ASSEMBLY | | 上ケースAss'y | KBP-500 (WM44660) | | |
| | 1 | -- | UPPER CASE ASSEMBLY | | 上ケースAss'y | KBP-300 (WM44670) | | |
| | 2 | -- | LCD UNIT-KBP | BLUE | 液晶ユニットーKBP | KBP-500 (WM53190) | | |
| | 2 | -- | LCD UNIT-KBP | ORANGE | 液晶ユニットーKBP | KBP-300 (WM53210) | | |
| | 3 | **WF816000** | PANEL SWITCH 1 BLACK | X7 | PNスイッチ 1 | ACMP,SYNCRO STOP,SYNCRO START,INTRO/ENDING,START/STOP,MAIN A,MAIN B | | 03 |
| | 4 | **WF816100** | PANEL SWITCH 2 WHITE | X5 | PNスイッチ 2 | 8BEAT,...,DG WUSHI RUMBA,...,METRO. | 2 | 03 |
| | 5 | **WF816200** | PANEL SWITCH 3 GRAY | X4 | PNスイッチ 3 | ACMP VOL UP,ACMP VOL DOWN TEMPO UP,TEMPO DOWN | | 02 |
| | 6 | **WF816300** | PANEL SWITCH 4 BLACK | X1 | PNスイッチ 4 | STYLE A/B,VOICE A/B | 2 | 01 |
| | 7 | **WF816400** | PANEL SWITCH 5 BLUE | X3 | PNスイッチ 5 | FUNCTION,+/YES,-/NO | | 03 |
| | 8 | **WF816500** | PANEL SWITCH 6 BLACK | X6 | PNスイッチ 6 | MEMORY,BANK,REGIST1, REGIST2,REGIST3,REGIST4 | | 03 |
| | 9 | **WF816600** | PANEL SWITCH 7 WHITE | X9 | PNスイッチ 7 | PIANO,...,CLARINET OBOE,...,SE/XG | 2 | 03 |
| | 10 | **WF816700** | PANEL SWITCH 8 GR/GR | X8 | PNスイッチ 8 | DUAL,SPLIT,ERHU,PIPA, YANGQIN,DIZI,SUONA,ENSEMBLE | | 03 |
| | 11 | **WF816800** | PANEL SWITCH 9 GRAY | X4 | PNスイッチ 9 | TOUCH,REVERB,SUSTAIN,DEMO | | 02 |
| | 12 | **WF816900** | PANEL SWITCH 10 BLACK | X1 | PNスイッチ 10 | SONG NO.,REC,PORTAMENTO | 3 | 01 |
| | 13 | **WF875500** | PANEL SWITCH 11 BLACK | X6 | PNスイッチ 11 | KBP-500 | | 03 |
| * | 13 | **WM313900** | PN SWITCH 11-2 | | PNスイッチ11ー2 | SONG 1-SONG 5,SONG A KBP-300 SONG 1,SONG 2,SONG A | | |
| * | 14 | **WM774900** | CIRCUIT BOARD | PNL | PNLシート | | | |
| * | 15 | **WM775000** | CIRCUIT BOARD | PNR | PNRシート | | | |
| * | 16 | **WM774700** | CIRCUIT BOARD | PB | PBシート | KBP-500 | | |
| * | 16 | **WM930200** | CIRCUIT BOARD | PB | PBシート | KBP-300 | | |
| * | 17 | **WM775100** | CIRCUIT BOARD | TWL | TWLシート | KBP-500 | | |
| * | 18 | **WM775200** | CIRCUIT BOARD | TWR | TWRシート | KBP-500 | | |
| * | 19 | **WM774600** | CIRCUIT BOARD | MIDI | MIDIシート | KBP-500 | | |
| * | 19 | **WM930100** | CIRCUIT BOARD | MIDI | MIDIシート | KBP-300 | | |
| | 20 | -- | CIRCUIT BOARD ASSEMBLY | AM | AM集成 | KBP-500 (WM45120) | | |
| | 20 | -- | CIRCUIT BOARD ASSEMBLY | AM | AMシート集成 | KBP-300 (WM93620) | | |
| * | 20a | **WM774500** | CIRCUIT BOARD | AM | AMシート | KBP-500 | | |
| * | 20a | **WM930000** | CIRCUIT BOARD | AM | AMシート | KBP-300 | | |
| * | 20b | **WM446500** | AM ANGLE | | AM金具 | | | |
| | 20c | **WE97460R** | BIND HEAD TAPPING SCREW-B | 4.0X8 MFZN2W3 | Bタイト十BIND | | 2 | 01 |
| * | 21 | **WM459900** | CIRCUIT BOARD ASSEMBLY | PJK | PJK集成 | | | |
| * | 21a | **WK925800** | CIRCUIT BOARD | PJK | PJKシート | | | |
| | 21b | -- | NONWOVEN FABRIC CLOTH | 36 12 0.35 | 不織布 | (WM89180) | | |
| | 22 | -- | WIRING ASSEMBLY PEDAL | PEDAL | PEDAL束線 | (WM94150) | | |
| | 23 | **X0159A0R** | SPEAKER | 3.0cm | スピーカ | KBP-500 TWEETER | 2 | 01 |
| | 24 | **WD365700** | SPONGE | 27 | スポンジ | KBP-500 | 2 | 01 |
| | 25 | **VY79310R** | WHEEL ASSEMBLY | | ホイールAss'y | PITCH BEND | | 04 |
| | 25a | **VY75080R** | WHEEL | | ホイール | | | 03 |
| | 25b | **VT44010R** | SPRING | | ホイールバネ | | | 03 |
| | 26 | **VQ21880R** | KNOB POWER SW RED | | プッシュツマミ | STANDBY/ON | | 03 |
| | 27 | **VU43240R** | KNOB,V BLACK | | Vツマミ | MASTER VOLUME | | 01 |
| | 28 | -- | FELT | 20 30 | フェルト | (WM93430) | | |
| | 29 | **WF575601** | KEYBOARD ASSEMBLY | A88 K6 | GHL鍵盤束線付A | | | |
| * | 30 | **WF836500** | FRONT RAIL | | 口棒レール | | 3 | |
| * | 31 | **WM886000** | WIRE HOLDER | | 束線押え | | | |
| | 32 | -- | LOWER CASE ASSEMBLY | | 下ケースAss'y | (WM93690) | | |
| * | 33 | **WM905300** | BOTTOM BOARD SUB ASSEMBLY | | 底板集成 | | 2 | |
| | 33a | -- | BOTTOM BOARD | | 底板 | (WN63020) | | |
| | 33b | -- | CUSHION(PE) | 515X35X1 | クッション(PE) | (WH22010) | 2 | |
| | 33c | -- | CUSHION(PE) | 118.5X15X1 | クッション(PE) | (WH22000) | 2 | |
| | 34 | **VA126101** | FILAMENT TAPE | 12X50 | 粘着テープ | | 3 | 01 |
| | 34 | -- | PET TAPE | MY7# 12X50 | PETテープ | (WB79380) | 3 | |
| | 37 | **WE774300** | BIND HEAD TAPPING SCREW-B | 3.0X8 MFZN2W3 | Bタイト十BIND | KBP-500 | 75 | 01 |
| | 37 | **WE774300** | BIND HEAD TAPPING SCREW-B | 3.0X8 MFZN2W3 | Bタイト十BIND | KBP-300 | 71 | 01 |
| | 38 | **WF48930R** | BIND HEAD TAPPING SCREW-B | 3.0X20 MFZN2W3 | Bタイト十BIND | | 8 | 01 |
| | 39 | **WE98120R** | BIND HEAD TAPPING SCREW-B | 4.0X12 MFZN2W3 | Bタイト十BIND | | 28 | 01 |
| | 40 | **WF15410R** | BIND HEAD TAPPING SCREW-B | 4.0X16 MFZN2W3 | Bタイト十BIND | | 66 | 01 |
| | 41 | **WE774000** | BIND HEAD SCREW 3X6 | 3.0X6 MFZN2W3 | 小ネジ十BIND | | | 01 |

*: New Parts

RANK: Japan only

| | REF NO. | PART NO. | DESCRIPTION | | 部品名 | REMARKS | QTY | RANK |
|---|---|---|---|---|---|---|---|---|
| | 42 | **TX920280** | GREASE | G-31KA (1KG) | グリス | (VE96850) | | 38 |
| | | | | | | | | |
| | | **--** | UPPER CASE ASSEMBLY | | 上ケースAss'y | KBP-500 (WM44660) | | |
| | | **--** | UPPER CASE ASSEMBLY | | 上ケースAss'y | KBP-300 (WM44670) | | |
| * | U1 | **WM445500** | UPPER CASE | | 上ケース印刷品 | KBP-500 | | |
| * | U1 | **WM445600** | UPPER CASE | | 上ケース印刷品 | KBP-300 | | |
| | U2 | **--** | SP GRILL L SUB ASSEMBLY | | SPグリルL集成 | (WM45960) | | |
| * | U2a | **WM446000** | SP GRILLE L | | SPグリルL塗装品 | | | |
| | U2b | **WH198300** | NONWOVEN FABRIC CLOTH | 460X6X0.35 | 不織布SP－GRIL | | 2 | 01 |
| | U3 | **--** | SP GRILL R SUB ASSEMBLY | | SPグリルR集成 | (WM45970) | | |
| * | U3a | **WM446100** | SP GRILLE R | | SPグリルR塗装品 | | | |
| | U3b | **WH198300** | NONWOVEN FABRIC CLOTH | 460X6X0.35 | 不織布SP－GRIL | | 2 | 01 |
| | U4 | **CB829850** | CORD HOLDER | S-34B-E | 束線止め | | 4 | 03 |
| | U5 | **WE774300** | BIND HEAD TAPPING SCREW-B | 3.0X8 MFZN2W3 | Bタイト十BIND | | 4 | 01 |
| | U6 | **--** | FELT | | フェルト | (WF43800) | | |
| | U7 | **--** | NONWOVEN CLOTH | 10X4X0.35 | 不織布 | (WP46060) | 9 | |
| | U8 | **--** | CUSHION (PE) | 160X90XT1 | クッション（PE） | (WP58650) | 2 | |
| | | | | | | | | |
| | | **--** | LCD UNIT-KBP | BLUE | 液晶ユニットーKBP | KBP-500 (WM53190) | | |
| | | **--** | LCD UNIT-KBP | ORANGE | 液晶ユニットーKBP | KBP-300 (WM53210) | | |
| | L10 | **V533910R** | LCD PANEL | TYPE-B | LCDパネル成形品 | | | 01 |
| * | L20 | **WM859600** | LCD DISPLAY | TTR2A0369-DPTDCN-C | 液晶ディスプレイ | | | |
| | L30 | **WB49110R** | BACK LIGHT ASSEMBLY | | バックライトAss'y | KBP-500 | | 08 |
| * | L30 | **WB490800** | BACK LIGHT ASSEMBLY-B | | バックライトAss'y | KBP-300 | | |
| | L40 | **--** | WIRING ASSEMBLY BL | BL 2P L=70 | BL束線 | (WC60260) | | |
| | L70 | **V867130R** | LCD HOLDER | | LCDホルダー | | | 01 |
| | L80 | **V783800R** | RUBBER CONNECTOR 105 | ZTT-710 | ゴムコネクター | | 2 | 03 |
| * | L80 | **WP352300** | RUBBER CONNECTOR | | ゴムコネクター | | 2 | |
| * | L90 | **WM294400** | CIRCUIT BOARD | DMLCD | DMLCDシート | KBP-500 | | |
| * | L90 | **WM931000** | CIRCUIT BOARD | DMLCD | DMLCDシート | KBP-300 | | |
| | L100 | **WE972900** | BIND HEAD TAPPING SCREW-P | 3.0X12 MFZN2W3 | Pタイト十BIND | | 8 | 01 |
| | L110 | **--** | NONWOVEN FABRIC CLOTH | 5X8 | 不織布 | (V706870) | 2 | |
| | | | | | | | | |
| | | | ACCESSORIES | | 付属品 | | | |
| | | **WG073800** | MUSIC REST | | 譜面板 | | | |
| ⚠ | | **WF32490R** | AC ADAPTER | PA-5D CHN | ACアダプター | | | 08 |
| | A1 | **WG889000** | STAND PIPE ASSEMBLY | | スタンドパイプAss'y | | | 12 |
| | A1a | **--** | STAND PIPE | | スタンドパイプ | (WG88890) | | |
| | A1b | **--** | CAP | CAP J3020 | キャップ | (WG90120) | 2 | |
| | A2 | **WG903600** | SCREW SET, FOR STAND PIPE | | ネジセット | | | |
| * | A2a | **WG901300** | BIND HEAD TAPPING SCREW-B | 4.0X45 MFZN2B3 | Bタイト十BIND | | 6 | |
| | | | STAND ASSEMBLY | | スタンドAss'y | | | |

*: New Parts

RANK: Japan only

# STAND ASSEMBLY

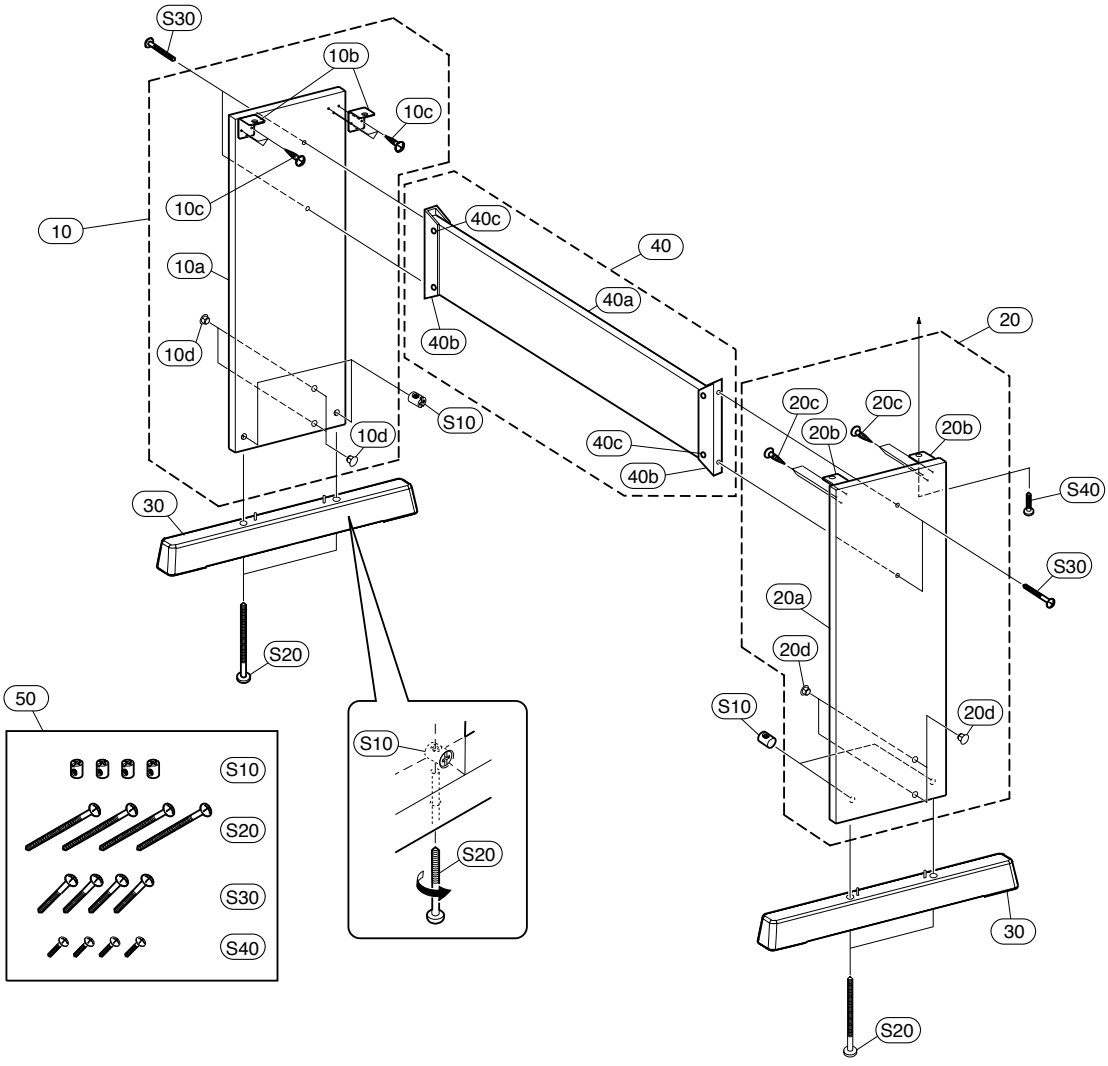


| | REF NO. | PART NO. | DESCRIPTION | | 部品名 | REMARKS | QTY | RANK |
|---|---|---|---|---|---|---|---|---|
| | | | STAND ASSEMBLY | | スタンドAss'y | KBP-500/KBP-300 | | |
| * | 10 | **WN054000** | SIDE BOARD ASSEMBLY L | | 側板 Ass'y L | KBP-500 | | |
| * | 10 | **WN054500** | SIDE BOARD ASSEMBLY L | | 側板 Ass'y L | KBP-300 | | |
| * | 10a | **WN056500** | SIDE BOARD L | | 側板 L | | | |
| | 10b | **VN973101** | ANGLE BRACKET | 24 | ST.アングル | | 2 | |
| | 10c | **WE95510R** | BIND HEAD TAPPING SCREW-1 | 3.5X16 MFZN2B3 | TP#1十BIND | | 6 | 01 |
| * | 10d | **WN455800** | CAP BLACK | | キャップ ブラック | KBP-300 | 4 | |
| * | 20 | **WN054100** | SIDE BOARD ASSEMBLY R | | 側板 Ass'y R | KBP-500 | | |
| * | 20 | **WN054600** | SIDE BOARD ASSEMBLY R | | 側板 Ass'y R | KBP-300 | | |
| * | 20a | **WN056600** | SIDE BOARD R | | 側板 R | | | |
| | 20b | **VN973101** | ANGLE BRACKET | 24 | ST.アングル | | 2 | |
| | 20c | **WE95510R** | BIND HEAD TAPPING SCREW-1 | 3.5X16 MFZN2B3 | TP#1十BIND | | 6 | 01 |
| * | 20d | **WN455800** | CAP BLACK | | キャップ ブラック | KBP-300 | 4 | |
| * | 30 | **WM927400** | TOE BLOCK | | 妻土台 | | | |
| * | 40 | **WN054800** | STAND RAIL ASSEMBLY | | 框Ass'y | | | |
| * | 40a | **WN056900** | STAND RAIL | | スタンド框 | | | |
| * | 40b | **WA694600** | RAIL REINFORCE ANGLE | | 框補強金具 | | 2 | |
| | 40c | **WE95510R** | BIND HEAD TAPPING SCREW-1 | 3.5X16 MFZN2B3 | TP#1十BIND | | 8 | 01 |
| | 50 | **WN055000** | SCREW SET | | ネジセット | | | |
| | | | | | | | | |
| | | **WN055000** | SCREW SET | | ネジセット | | | |
| | S10 | **WF55910R** | JOINT CONNECTOR | 6.0X13 | ナット特殊 | | 4 | 01 |
| | S20 | **WF49230R** | TRUSS HEAD SCREW | 6.0X70 MFZN2B3 | 特注ネジ十TRUS | | 4 | 01 |
| | S30 | **WH287000** | TRUSS HEAD SCREW | 6.0X30 MFZN2B3 | 特注ネジ十TRUS | | 4 | 01 |
| | S40 | **WF49240R** | TRUSS HEAD SCREW | 5.0X16 MFZN2W3 | 小ネジ十TRUS | | 4 | 01 |

*: New Parts

RANK: Japan only

# LOWER CASE ASSEMBLY

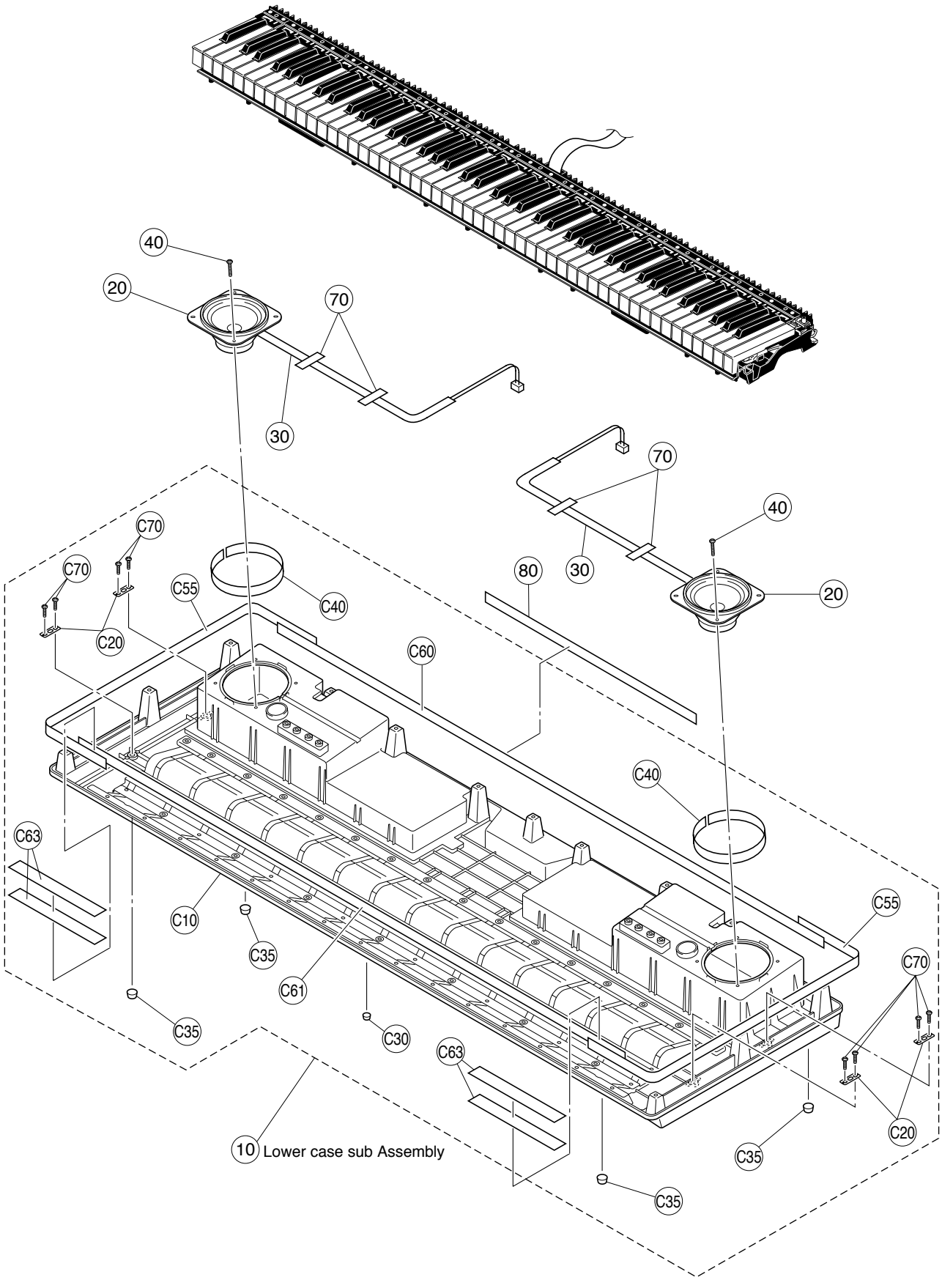

| REF NO. | PART NO. | DESCRIPTION | | 部品名 | REMARKS | QTY | RANK |
|---|---|---|---|---|---|---|---|
| | | LOWER CASE ASSEMBLY | | 下ケースAss'y | KBP-500/KBP-300 | | |
| | -- | LOWER CASE ASSEMBLY | | 下ケースAss'y | (WM93690) | | |
| 10 | **WF839500** | LOWER CASE SUB ASSEMBLY | | 下ケースサブAss'y | | | |
| 20 | **X7430A00** | SPEAKER | 12.0cm 4 ohm 10W | スピーカー | WOOFER | 2 | 07 |
| 30 | -- | WIRING ASSEMBLY SP | SP XH 2P | SP束線 | (WM44970) | 2 | |
| 40 | **WE98120R** | BIND HEAD TAPPING SCREW-B | 4.0X12 MFZN2W3 | Bタイト十BIND | | 8 | 01 |
| 70 | **VA126101** | FILAMENT TAPE | 12X50 | 粘着テープ | | 4 | 01 |
| 70 | -- | PET TAPE | MY7# 12X50 | PETテープ | (WB79380) | 4 | |
| 80 | -- | CUSHION (PE) | 1200X10X1 | クッション(PE) | (WH70440) | | |
| | | | | | | | |
| | **WF839500** | LOWER CASE SUB ASSEMBLY | | 下ケースサブAss'y | | | |
| C10 | -- | LOWER_CASE | | 下ケース成型品 | (WF83410) | | |
| C20 | **VI104400** | LEG HOLDER CH | | 脚取り付け金具天津製 | | 4 | |
| C30 | **CB043752** | RUBBER INSULATOR MP-1 | T1.6 | ゴム脚 | | | |
| C35 | **V928180R** | FOOT | T1.6 | ゴム脚 | | 4 | 01 |
| C40 | -- | SEALING TAPE SP | 395X8X1 | シールテープSP | (WG31740) | 2 | |
| C55 | -- | CUSHION(PE) | 700X20X1 | クッション(PE) | (WH19450) | 2 | |
| C60 | -- | CUSHION(PE) | 1200X20X2 | クッション(PE) | (WH19440) | | |
| C61 | -- | CUSHION(PE) | 1200X20X1 | クッション(PE) | (WH70450) | | |
| C63 | -- | CUSHION(PE) | 163X20X2 | クッション(PE) | (WH39000) | 4 | |
| C70 | **WE774300** | BIND HEAD TAPPING SCREW-B | 3.0X8 MFZN2W3 | Bタイト十BIND | | 8 | 01 |

✻: New Parts

RANK: Japan only

# GHL KEYBOARD ASSEMBLY

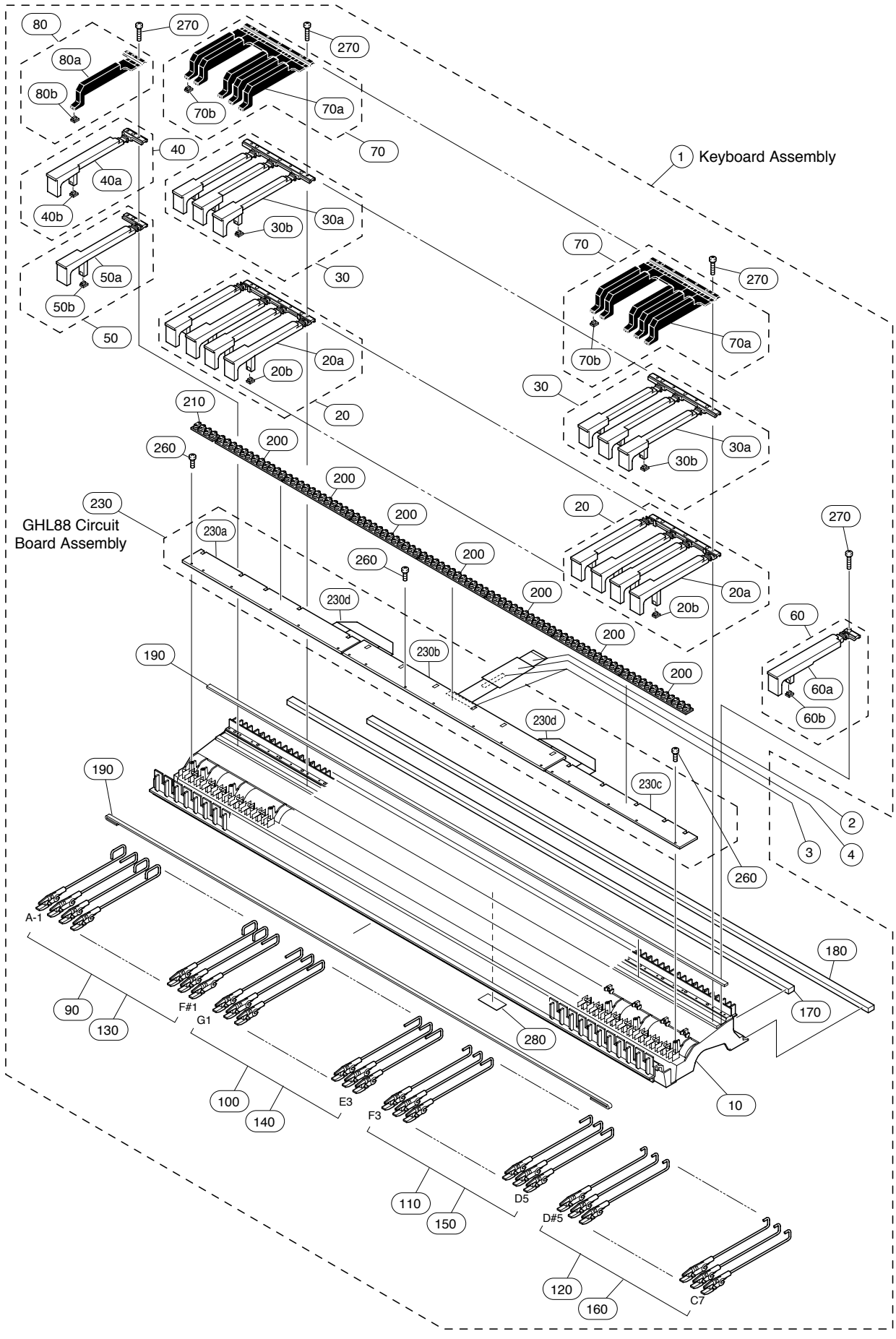

| REF NO. | PART NO. | DESCRIPTION | | 部品名 | REMARKS | QTY | RANK |
|---|---|---|---|---|---|---|---|
| | | KEYBOARD ASSEMBLY | | GHL鍵盤束線付A | KBP-500/KBP-300 A | | |
| | **WF575601** | KEYBOARD ASSEMBLY | A88 K6 | GHL鍵盤束線付A | | | |
| 1 | **--** | KEYBOARD ASSEMBLY GHL(GHS) | A88 K6 | GHL鍵盤Ass'y | (WF15380) | | |
| 2 | **WG12390R** | FFC CABLE | | FFCケーブル | | | |
| 3 | **--** | FILAMENT TAPE | FILAMENT 12mmX50mm | フィラメントテープ | (WG47940) | 2 | |
| 4 | **--** | SPONGE | | 防振スポンジ | (WF45020) | | |
| | | | | | | | |
| | **--** | KEYBOARD ASSEMBLY GHL(GHS) | A88 K6 | GHL鍵盤Ass'y | (WF15380) | | |
| 10 | **--** | KEYBOARD FRAME | A88 | フレーム88改 | (WJ02700) | | |
| 20 | **WJ029600** | WHITE KEY ASSEMBLY | | CEGB白鍵ASY改 | | 7 | 04 |
| 20a | **--** | WHITE KEYS | CEGB | 白鍵CEGB改 | (WJ02730) | | |
| 20b | **WG43760R** | ACTUATE RUBBER | GHL | 駆動ラバー | | 4 | 01 |
| 20b | **WN742300** | ACTUATE RUBBER | GHL | 駆動ラバー | | 4 | |
| 30 | **WJ029700** | WHITE KEY ASSEMBLY | | DFA白鍵Ass'y改 | | 7 | 03 |
| 30a | **--** | WHITE KEYS | DFA | 白鍵DFA改 | (WJ02740) | | |
| 30b | **WG43760R** | ACTUATE RUBBER | GHL | 駆動ラバー | | 3 | 01 |
| 30b | **WN742300** | ACTUATE RUBBER | GHL | 駆動ラバー | | 3 | |
| 40 | **WJ029900** | WHITE KEY ASSEMBLY | | A白鍵Ass'y改 | | | 02 |
| 40a | **--** | WHITE KEY | A | 白鍵A改 | (WJ02750) | | |
| 40b | **WG43760R** | ACTUATE RUBBER | GHL | 駆動ラバー | | | 01 |
| 40b | **WN742300** | ACTUATE RUBBER | GHL | 駆動ラバー | | | |
| 50 | **WJ030000** | WHITE KEY ASSEMBLY | | B白鍵Ass'y改 | | | 02 |
| 50a | **--** | WHITE KEY | B | 白鍵B改 | (WJ02760) | | |
| 50b | **WG43760R** | ACTUATE RUBBER | GHL | 駆動ラバー | | | 01 |
| 50b | **WN742300** | ACTUATE RUBBER | GHL | 駆動ラバー | | | |
| 60 | **WJ030100** | WHITE KEY ASSEMBLY | | C白鍵Ass'y改 | | | 02 |
| 60a | **--** | WHITE KEY | C | 白鍵C改 | (WJ02770) | | |
| 60b | **WG43760R** | ACTUATE RUBBER | GHL | 駆動ラバー | | | 01 |
| 60b | **WN742300** | ACTUATE RUBBER | GHL | 駆動ラバー | | | |
| 70 | **WG49160R** | BLACK KEY ASSEMBLY | | 黒鍵Ass'y | | 7 | 01 |
| 70a | **--** | BLACK KEY | | 黒鍵 | (WF16450) | | |
| 70b | **WG43760R** | ACTUATE RUBBER | GHL | 駆動ラバー | | 5 | 01 |
| 70b | **WN742300** | ACTUATE RUBBER | GHL | 駆動ラバー | | | |
| 80 | **WG49170R** | BLACK KEY ASSEMBLY A# | | A#黒鍵Ass'y | | | 01 |
| 80a | **--** | BLACK KEY | A# | 黒鍵A# | (WF16460) | | |
| 80b | **WG43760R** | ACTUATE RUBBER | GHL | 駆動ラバー | | | 01 |
| 80b | **WN742300** | ACTUATE RUBBER | GHL | 駆動ラバー | | | |
| 90 | **WF15140R** | HAMMER ASSEMBLY, WHITE | W1 | ハンマーW1 | | 13 | 02 |
| 100 | **WF15150R** | HAMMER ASSEMBLY, WHITE | W2 | ハンマーW2 | | 13 | 02 |
| 110 | **WF15160R** | HAMMER ASSEMBLY, WHITE | W3 | ハンマーW3 | | 13 | 02 |
| 120 | **WF15170R** | HAMMER ASSEMBLY, WHITE | W4 | ハンマーW4 | | 13 | 02 |
| 130 | **WF15180R** | HAMMER ASSEMBLY, WHITE | B1 | ハンマーB1 | | 9 | 02 |
| 140 | **WF15190R** | HAMMER ASSEMBLY, WHITE | B2 | ハンマーB2 | | 9 | 02 |
| 150 | **WF15200R** | HAMMER ASSEMBLY, WHITE | B3 | ハンマーB3 | | 9 | 02 |
| 160 | **WF15210R** | HAMMER ASSEMBLY, WHITE | B4 | ハンマーB4 | | 9 | 02 |
| 170 | **WF21200R** | STOPPER U88 | | ストッパーU88 | | | 07 |
| 180 | **WK688701** | STOPPER L88 | | ストッパーL88 | | | |
| 190 | **--** | LIMIT STOPPER | 88 | リミットストッパー | (WF21190) | 2 | |
| 200 | **WF212202** | RUBBER CONTACT | GHL OCT 2M | 接点ゴムOCT | C#0-C1,C#1-C2,C#2-C3,C#3-C4, C#4-C5,C#5-C6,C#6-C7 | 7 | |
| 210 | **WF21240R** | RUBBER CONTACT | GHL A-C 2M | 接点ゴムA-C | A-1-C0 | | 05 |
| 230 | **--** | CIRCUIT BOARD | GHL88 | GHL88シート | (WG31750) | | |
| 230a | **WF21250R** | CIRCUIT BOARD | GHL88L | GHL88Lシート | | | 13 |
| 230b | **WF21260R** | CIRCUIT BOARD | GHL88M | GHL88Mシート | | | 13 |
| 230c | **WF21280R** | CIRCUIT BOARD | GHL88H | GHL88Hシート | | | 12 |
| 230d | **--** | CONNECTOR ASSEMBLY | 17P | 中継束線 | (WF21290) | 2 | |
| 260 | **WF267300** | BIND HEAD P-TIGHT SCREW | 2.6X8 MFZN2W3 | PタイトBIND | | 18 | 01 |
| 270 | **WE973000** | BIND HEAD TAPPING SCREW-P | 3.0X16 MFZN2W3 | PタイトBIND | | 31 | |
| 280 | **--** | SPONGE GHS | | 防振スポンジ GHS | (WH71130) | | |
| 290 | **--** | GREASE | MORI G-1030Y | グリス | (WC77150) | | |
| 290 | **--** | GREASE_BLUE | G-1066Y 16KG | グリス青 | (WM49860) | | |

✻: New Parts

RANK: Japan only

**• Hammer, white key**

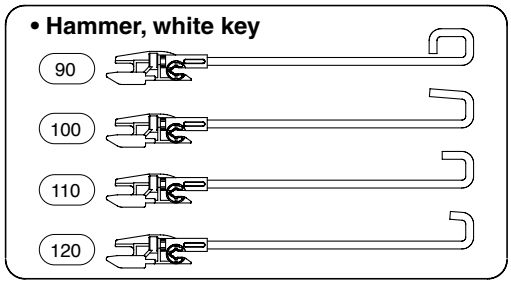


**• Hammer, black key**

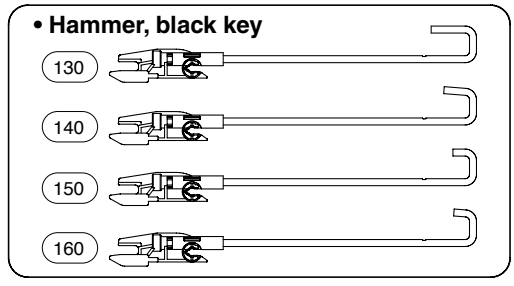

# ■ ELECTRICAL PARTS

## AM/MIDI/PB

| | REF NO. | PART NO. | DESCRIPTION | | 部品名 | REMARKS | QTY | RANK |
|---|---|---|---|---|---|---|---|---|
| | | | ELECTRICAL PARTS | | 電気部品 | KBP-500/KBP-300 | | |
| * | | **WM774500** | CIRCUIT BOARD | AM(AMJK 1,4,5/6) | AMシート | KBP-500 (WM77440)(X7176H0) | | |
| * | | **WM930000** | CIRCUIT BOARD | AM(AMJK 1,4,5/6) | AMシート | KBP-300 (WM92990)(X7176H0) | | |
| * | | **WM774600** | CIRCUIT BOARD | MIDI(AMJK 2/6) | MIDIシート | KBP-500 (WM77440)(X7176H0) | | |
| * | | **WM930100** | CIRCUIT BOARD | MIDI(AMJK 2/6) | MIDIシート | KBP-300 (WM92990)(X7176H0) | | |
| * | | **WM774700** | CIRCUIT BOARD | PB(AMJK 6/6) | PBシート | KBP-500 (WM77440)(X7176H0) | | |
| * | | **WM930200** | CIRCUIT BOARD | PB(AMJK 6/6) | PBシート | KBP-300 (WM92990)(X7176H0) | | |
| * | | **WM294400** | CIRCUIT BOARD | DMLCD | DMLCDシート | KBP-500 (WM29430)(X9195C0) | | |
| * | | **WM931000** | CIRCUIT BOARD | DMLCD | DMLCDシート | KBP-300 (WM93090)(X9195C0) | | |
| * | | **WK925800** | CIRCUIT BOARD | PJK | PJKシート | (WK92570)(X9120C0) | | |
| * | | **WM774900** | CIRCUIT BOARD | PNL(PN 2/6,4/6) | PNLシート | (WM77480)(X7177C0) | | |
| * | | **WM775000** | CIRCUIT BOARD | PNR(PN 1/6,3/6) | PNRシート | (WM77480)(X7177C0) | | |
| * | | **WM775100** | CIRCUIT BOARD | TWL(PN 5/6,6/6) | TWLシート | KBP-500 (WM77480)(X7177C0) | | |
| * | | **WM775200** | CIRCUIT BOARD | TWR(PN 5/6,6/6) | TWRシート | KBP-500 (WM77480)(X7177C0) | | |
| | | **WF21250R** | CIRCUIT BOARD | GHL88L | GHL88Lシート | (WF46230)(X6244D0) | | 13 |
| | | **WF21260R** | CIRCUIT BOARD | GHL88M | GHL88Mシート | (WF46240)(X6245G0) | | 13 |
| | | **WF21280R** | CIRCUIT BOARD | GHL88H | GHL88Hシート | (WF46250)(X6246D0) | | 12 |
| | | | | | | | | |
| * | | **WM774500** | CIRCUIT BOARD | AM(AMJK 1,4,5/6) | AMシート | KBP-500 (WM77440)(X7176H0) | | |
| * | | **WM930000** | CIRCUIT BOARD | AM(AMJK 1,4,5/6) | AMシート | KBP-300 (WM92990)(X7176H0) | | |
| * | | **WM774600** | CIRCUIT BOARD | MIDI(AMJK 2/6) | MIDIシート | KBP-500 (WM77440)(X7176H0) | | |
| * | | **WM930100** | CIRCUIT BOARD | MIDI(AMJK 2/6) | MIDIシート | KBP-300 (WM92990)(X7176H0) | | |
| * | | **WM774700** | CIRCUIT BOARD | PB(AMJK 6/6) | PBシート | KBP-500 (WM77440)(X7176H0) | | |
| * | | **WM930200** | CIRCUIT BOARD | PB(AMJK 6/6) | PBシート | KBP-300 (WM92990)(X7176H0) | | |
| | 30 | **--** | JUMPER CABLE | 0.55 TIN | ジャンパー線 | (VA07890) | 28 | |
| | 50 | **WE774300** | BIND HEAD TAPPING SCREW-B | 3.0X8 MFZN2W3 | Bタイト十BIND | | 3 | 01 |
| | C103 | **VC69480R** | CEAMIC CAPACITOR | 0.1000 25V Z TATET | 半導体セラコン | | | 01 |
| | C104 | **UR749680** | ELECTROLYTIC CAP. | 6800 25.0V FORM. | ケミコン | | | |
| | C104 | **V3773200** | ELECTROLYTIC CAP. | 6800.0 25.0V FORM. | ケミコン | | | |
| | C105 | **VC69480R** | CEAMIC CAPACITOR | 0.1000 25V Z TATET | 半導体セラコン | | | 01 |
| | C106 | **VC69480R** | CEAMIC CAPACITOR | 0.1000 25V Z TATET | 半導体セラコン | | | 01 |
| | C107 | **UR828220** | ELECTROLYTIC CAP. | 220.00 10.0V RX TP | ケミコン | | | |
| | C107 | **V350740R** | ELECTROLYTIC CAP. | 220.00 10.0V TP | ケミコン | | | 01 |
| | C551 | **UA456100** | MYLAR CAPACITOR | 1.0000 50V J ST | マイラーコン | | | 03 |
| | C551 | **V5516600** | MYLAR CAPACITOR | 1.0000 50V J | マイラーコン | | | |
| | C551 | **VE327200** | MULTILAYER MYLAR FILM CAP. | 1.0 50V J RX TP | 積層マイラーコン | | | |
| | C551 | **VU838100** | MONOLITHIC MYLAR CAPACITOR | 1.0000 50V J TATET | 積層マイラーコン | | | |
| | C552 | **UA456100** | MYLAR CAPACITOR | 1.0000 50V J ST | マイラーコン | | | 03 |
| | C552 | **V5516600** | MYLAR CAPACITOR | 1.0000 50V J | マイラーコン | | | |
| | C552 | **VE327200** | MULTILAYER MYLAR FILM CAP. | 1.0 50V J RX TP | 積層マイラーコン | | | |
| | C552 | **VU838100** | MONOLITHIC MYLAR CAPACITOR | 1.0000 50V J TATET | 積層マイラーコン | | | |
| | C553 | **FG613100** | CERAMIC CAP.(B) | 1000P 50V K RX TP | セラコン(B) | | | |
| | C553 | **VR02620R** | CERAMIC CAPACITOR-2B | 1000P 63V K FORM. | セラコン2B 天津製 | | | |
| | C554 | **FG613100** | CERAMIC CAP.(B) | 1000P 50V K RX TP | セラコン(B) | | | |
| | C554 | **VR02620R** | CERAMIC CAPACITOR-2B | 1000P 63V K FORM. | セラコン2B 天津製 | | | |
| | C557 | **FG61247R** | CERAMIC CAP.(B) | 470P 50V K RX TP | セラコン(B) | | | 01 |
| | C557 | **VR02580R** | CERAMIC CAPACITOR-2B | 470P 63V K FORMING | セラコン2B 天津製 | | | |
| | C558 | **FG61247R** | CERAMIC CAP.(B) | 470P 50V K RX TP | セラコン(B) | | | 01 |
| | C558 | **VR02580R** | CERAMIC CAPACITOR-2B | 470P 63V K FORMING | セラコン2B 天津製 | | | |
| | C560 | **UR838100** | ELECTROLYTIC CAP. | 100.00 16.0V RX TP | ケミコン | | | |
| | C560 | **V350850R** | ELECTROLYTIC CAP. | 100.00 16.0V TP | ケミコン | | | |
| | C561 | **UR827330** | ELECTROLYTIC CAP. | 33.00 10.0V RX TP | ケミコン | | | |
| | C561 | **V3508300** | ELECTROLYTIC CAP. | 33.00 16.0V TP | ケミコン | | | |
| | C562 | **UR867100** | ELECTROLYTIC CAP. | 10.00 50.0V RX TP | ケミコン | | | |
| | C562 | **V3512300** | ELECTROLYTIC CAP. | 10.00 50.0V TP | ケミコン | | | |
| | C563 | **UA654470** | MYLAR FILM CAP. | 0.0470 50V J RX TP | マイラーコン | | | |
| | -566 | **UA654470** | MYLAR FILM CAP. | 0.0470 50V J RX TP | マイラーコン | | | |
| | C563 | **V5515000** | MYLAR CAPACITOR | 0.0470 50V J | マイラーコン | | | |
| | -566 | **V5515000** | MYLAR CAPACITOR | 0.0470 50V J | マイラーコン | | | |
| | C563 | **VS884200** | MYLAR CAPACITOR | 0.0470 100V K TE | マイラーコン | | | |
| | -566 | **VS884200** | MYLAR CAPACITOR | 0.0470 100V K TE | マイラーコン | | | |
| | C569 | **UR837470** | ELECTROLYTIC CAP. | 47.00 16.0V RX TP | ケミコン | | | |
| | C569 | **V350840R** | ELECTROLYTIC CAP. | 47.00 16.0V TP | ケミコン | | | |
| | C570 | **UR837470** | ELECTROLYTIC CAP. | 47.00 16.0V RX TP | ケミコン | | | |
| | C570 | **V350840R** | ELECTROLYTIC CAP. | 47.00 16.0V TP | ケミコン | | | |
| | C571 | **VC69480R** | CEAMIC CAPACITOR | 0.1000 25V Z TATET | 半導体セラコン | | | 01 |
| | C851 | **FG64410R** | CERAMIC CAP.(F) | 0.0100 50V Z RX TP | セラコン(F) | | | 01 |
| | C851 | **VQ17570R** | CERAMIC CAPACITOR-2 | 0.01 63V Z FORMING | セラコン 天津製 2 | | | |
| | C852 | **VC69480R** | CEAMIC CAPACITOR | 0.1000 25V Z TATET | 半導体セラコン | | | 01 |
| | C853 | **FG65210R** | CERAMIC CAP.(SL) | 100P 50V J RX TP | セラコン(SL) | | | 01 |

*: New Parts

RANK: Japan only

# AM/MIDI/PB

| REF NO. | PART NO. | DESCRIPTION | | 部品名 | REMARKS | QTY | RANK |
|---|---|---|---|---|---|---|---|
| C853 | **VR02500R** | CERAMIC CAPACITOR-2B | 100P 63V K FORMING | セラコン2B 天津製 | | | |
| C854 | **VC69480R** | CEAMIC CAPACITOR | 0.1000 25V Z TATET | 半導体セラコン | | | 01 |
| C862 | **FG65210R** | CERAMIC CAP.(SL) | 100P 50V J RX TP | セラコン(SL) | | | 01 |
| C862 | **VR02500R** | CERAMIC CAPACITOR-2B | 100P 63V K FORMING | セラコン2B 天津製 | | | |
| CN151 | **LB918030** | BASE PIN I-TYPE | XH 3P TE | ベーススツキポスト | KBP-300 | | |
| CN152 | **VK024600** | CONNECTOR, BASE PIN | 52147 2P TE | ワイヤートラップ | | | |
| CN153 | **VI878200** | CABLE HOLDER | 51048 4P TE | ケーブルホルダー | | | |
| CN153 | **VY668400** | CABLE HOLDER | 51048 4P TE | ケーブルホルダー天津 | | | |
| CN154 | **VI878200** | CABLE HOLDER | 51048 4P TE | ケーブルホルダー | | | |
| CN154 | **VY668400** | CABLE HOLDER | 51048 4P TE | ケーブルホルダー天津 | | | |
| CN155 | **VI879100** | BASE PIN | 51048 13P TE | ケーブルホルダー | | | |
| CN155 | **VY669000** | CABLE HOLDER | 51048 13P TE | ケーブルホルダー天津 | | | |
| CN551 | **VI878300** | BASE PIN | 51048 5P TE | ケーブルホルダー | | | |
| CN551 | **VZ34170R** | CABLE HOLDER | 51048 5P TE | ケーブルホルダー天津 | | | |
| CN552 | **VI878300** | BASE PIN | 51048 5P TE | ケーブルホルダー | | | |
| CN552 | **VZ34170R** | CABLE HOLDER | 51048 5P TE | ケーブルホルダー天津 | | | |
| CN553 | **VI878000** | BASE PIN | 51048 2P TE | ケーブルホルダー | KBP-500 | | |
| CN553 | **VY66830R** | CABLE HOLDER | 51048 2P TE | ケーブルホルダー天津 | | | |
| CN554 | **LB918020** | BASE PIN I-TYPE | XH 2P TE | ベーススツキポスト | | | |
| CN555 | **LB918020** | BASE PIN I-TYPE | XH 2P TE | ベーススツキポスト | | | |
| CN556 | **VI878000** | BASE PIN | 51048 2P TE | ケーブルホルダー | KBP-500 | | |
| CN556 | **VY66830R** | CABLE HOLDER | 51048 2P TE | ケーブルホルダー天津 | | | |
| CN853 | **VI878700** | CABLE HOLDER | 51048 9P TE | ケーブルホルダー | | | |
| CN853 | **VZ34190R** | CABLE HOLDER | 51048 9P TE | ケーブルホルダー天津 | | | |
| CN855 | **VI878100** | BASE PIN | 51048 3P TE | ケーブルホルダー | | | |
| CN855 | **VZ34160R** | CABLE HOLDER | 51048 3P TE | ケーブルホルダー天津 | | | |
| ⚠ D151 | **V860310R** | DIODE 2A02GM | 2A02G-01 X0 JI | ダイオード | | | |
| ⚠ D151 | **VV73140R** | DIODE 2A02M | 2A02-05 X0 | ダイオード | | | 01 |
| D152 | **WB88090R** | DIODE | 10EDA40-TA1B2 26 | ダイオード | | | 01 |
| D152 | **WM881800** | DIODE | 1A4-E 26 | ダイオード | | | |
| D153 | **WB88090R** | DIODE | 10EDA40-TA1B2 26 | ダイオード | | | 01 |
| D153 | **WM881800** | DIODE | 1A4-E 26 | ダイオード | | | |
| D851 | **VB941200** | DIODE | 1SS133,1SS176 TE | ダイオード | | | |
| IC151 | **X6980A00** | IC | BA60BC0T | IC | REGULATOR +6V 1.0A | | 03 |
| IC551 | **XY209A0R** | IC | LA4625-E 13.5W | IC | POWER AMP. 6W+6W | | 05 |
| IC851 | **WA64520R** | PHOTO COUPLER PC-900V0NSZX | PC900V0NSZX | フォトカプラ | | | 04 |
| J151 | **--** | JUMPER CABLE | 0.55 TIN | ジャンパー線 | (VA07890) | | |
| -153 | **--** | JUMPER CABLE | 0.55 TIN | ジャンパー線 | (VA07890) | | |
| J156 | **--** | JUMPER CABLE | 0.55 TIN | ジャンパー線 | (VA07890) | | |
| J158 | **--** | JUMPER CABLE | 0.55 TIN | ジャンパー線 | (VA07890) | | |
| J551 | **--** | JUMPER CABLE | 0.55 TIN | ジャンパー線 | (VA07890) | | |
| J852 | **--** | JUMPER CABLE | 0.55 TIN | ジャンパー線 | (VA07890) | | |
| J853 | **--** | JUMPER CABLE | 0.55 TIN | ジャンパー線 | (VA07890) | | |
| ⚠ JK151 | **LB302260** | DC JACK | HEC0470-01-630 | 電源コネクタ | DC IN 12V | | 02 |
| ⚠ JK151 | **V655760R** | CONNECTOR | HTJ-020-05AZ | 電源コネクタ | | | |
| JK551 | **LB101870** | HEADPHONE | JACK YKB21-5006 | ホーンコネクタ | PHONES/OUTPUT | | 03 |
| JK551 | **VV943300** | PHONE JACK | HTJ064-04A | ホーンコネクタ | | | 02 |
| JK851 | **VC68750R** | PHONE BL | JACK YKB21-5014 | ホーンコネクタ(黒) | SUSTAIN | | 01 |
| JK851 | **WE24520R** | PHONE JACK | JY-6314-01-020 | ホーンコネクタ(黒) | | | |
| JK852 | **VJ10720R** | DIN CONNECTOR | JACK 5P YKF51-5050N | DINコネクタ | MIDI OUT | | 01 |
| JK852 | **VZ085800** | DIN CONNECTOR | 5P HDC-052S-01 | DINコネクタ | | | 01 |
| JK853 | **VJ10720R** | DIN CONNECTOR | JACK 5P YKF51-5050N | DINコネクタ | MIDI IN | | 01 |
| JK853 | **VZ085800** | DIN CONNECTOR | 5P HDC-052S-01 | DINコネクタ | | | 01 |
| JK856 | **VM467200** | PIN CONNECTOR | JACK LCZ3.4-1 | ピンコネクタ 天津製 | EXP. PEDAL | | |
| K551 | **--** | HEAT SINK | | 放熱板 | (WF87700) | | |
| L555 | **GE300670** | FERRIT | BL02RN2R1P1A | フェライトビーズ | | | 02 |
| L851 | **V763440R** | COIL | BD-FL20-03 20UH | コイル 20UH | | | |
| L851 | **VB835000** | COIL | FL05RD200AT 20UH | コイル 20U | | | 01 |
| L851 | **VT27920R** | COIL | DX001-20UH | コイル 20U 天津 | | | |
| L854 | **V763440R** | COIL | BD-FL20-03 20UH | コイル 20UH | | | |
| L854 | **VB835000** | COIL | FL05RD200AT 20UH | コイル 20U | | | 01 |
| L854 | **VT27920R** | COIL | DX001-20UH | コイル 20U 天津 | | | |
| R151 | **HF455180** | CARBON RESISTOR | 180.0 1/4 J AX TP | カーボン抵抗 | | | |
| R151 | **V254830R** | CARBON RESISTOR | 180.0 1/6J 26TP | カーボン抵抗 | | | |
| R152 | **HF455150** | CARBON RESISTOR | 150.0 1/4 J AX TP | カーボン抵抗 | | | |
| R152 | **V2548200** | CARBON RESISTOR | 150.0 1/6J 26TP | カーボン抵抗 | | | 01 |
| R551 | **HF45710R** | CARBON RESISTOR | 10.0K 1/4 J AX TP | カーボン抵抗 | | | 01 |
| R551 | **V255040R** | CARBON RESISTOR | 10.0K 1/6J 26TP | カーボン抵抗 | | | |
| R552 | **HF45710R** | CARBON RESISTOR | 10.0K 1/4 J AX TP | カーボン抵抗 | | | 01 |
| R552 | **V255040R** | CARBON RESISTOR | 10.0K 1/6J 26TP | カーボン抵抗 | | | |

✻: New Parts

RANK: Japan only

# AM/MIDI/PB and DMLCD

| REF NO. | PART NO. | DESCRIPTION | | 部品名 | REMARKS | QTY | RANK |
|---|---|---|---|---|---|---|---|
| R553 | **HF45622R** | CARBON RESISTOR | 2.2K 1/4 J AX TP | カーボン抵抗 | | | 01 |
| R553 | **V2549600** | CARBON RESISTOR | 2.2K 1/6 J 26TP | カーボン抵抗 | | | |
| R554 | **HF45622R** | CARBON RESISTOR | 2.2K 1/4 J AX TP | カーボン抵抗 | | | 01 |
| R554 | **V2549600** | CARBON RESISTOR | 2.2K 1/6 J 26TP | カーボン抵抗 | | | |
| R555 | **HF45710R** | CARBON RESISTOR | 10.0K 1/4 J AX TP | カーボン抵抗 | | | 01 |
| R555 | **V255040R** | CARBON RESISTOR | 10.0K 1/6J 26TP | カーボン抵抗 | | | |
| R556 | **WD55670R** | RES FLAME PROOF | 2.2 1/4 J TE-26 | 不燃化カーボン抵抗 | | | 01 |
| -559 | **WD55670R** | RES FLAME PROOF | 2.2 1/4 J TE-26 | 不燃化カーボン抵抗 | | | 01 |
| R560 | **HF45510R** | CARBON RESISTOR | 100.0 1/4 J AX TP | カーボン抵抗 | | | 01 |
| R560 | **V254800R** | CARBON RESISTOR | 100.0 1/6J 26TP | カーボン抵抗 | | | |
| R561 | **HF45510R** | CARBON RESISTOR | 100.0 1/4 J AX TP | カーボン抵抗 | | | 01 |
| R561 | **V254800R** | CARBON RESISTOR | 100.0 1/6J 26TP | カーボン抵抗 | | | |
| R562 | **HF455330** | CARBON RESISTOR | 330.0 1/4 J AX TP | カーボン抵抗 | | | |
| R562 | **V254860R** | CARBON RESISTOR | 330.0 1/6J 26TP | カーボン抵抗 | | | |
| R563 | **HF455330** | CARBON RESISTOR | 330.0 1/4 J AX TP | カーボン抵抗 | | | |
| R563 | **V254860R** | CARBON RESISTOR | 330.0 1/6J 26TP | カーボン抵抗 | | | |
| R564 | **HF45610R** | CARBON RESISTOR | 1.0K 1/4 J AX TP | カーボン抵抗 | | | 01 |
| R564 | **V254920R** | CARBON RESISTOR | 1.0K 1/6 J 26TP | カーボン抵抗 | | | |
| R565 | **HF45610R** | CARBON RESISTOR | 1.0K 1/4 J AX TP | カーボン抵抗 | | | 01 |
| R565 | **V254920R** | CARBON RESISTOR | 1.0K 1/6 J 26TP | カーボン抵抗 | | | |
| R851 | **HF45710R** | CARBON RESISTOR | 10.0K 1/4 J AX TP | カーボン抵抗 | | | 01 |
| R851 | **V255040R** | CARBON RESISTOR | 10.0K 1/6J 26TP | カーボン抵抗 | | | |
| R852 | **HF457150** | CARBON RESISTOR | 15.0K 1/4 J AX TP | カーボン抵抗 | | | 01 |
| R852 | **V255060R** | CARBON RESISTOR | 15.0K 1/6J 26TP | カーボン抵抗 | | | |
| R853 | **HF456470** | CARBON RESISTOR | 4.7K 1/4 J AX TP | カーボン抵抗 | | | 01 |
| R853 | **V255000R** | CARBON RESISTOR | 4.7K 1/6 J 26TP | カーボン抵抗 | | | |
| R854 | **HF45610R** | CARBON RESISTOR | 1.0K 1/4 J AX TP | カーボン抵抗 | | | 01 |
| R854 | **V254920R** | CARBON RESISTOR | 1.0K 1/6 J 26TP | カーボン抵抗 | | | |
| R855 | **HF455220** | CARBON RESISTOR | 220.0 1/4 J AX TP | カーボン抵抗 | | | |
| R855 | **V254840R** | CARBON RESISTOR | 220.0 1/6J 26TP | カーボン抵抗 | | | |
| R856 | **HF454470** | CARBON RESISTOR | 47.0 1/4 J AX TP | カーボン抵抗 | | | 01 |
| R856 | **V254760R** | CARBON RESISTOR | 47.0 1/6J 26TP | カーボン抵抗 | | | |
| R857 | **HF454470** | CARBON RESISTOR | 47.0 1/4 J AX TP | カーボン抵抗 | | | 01 |
| R857 | **V254760R** | CARBON RESISTOR | 47.0 1/6J 26TP | カーボン抵抗 | | | |
| R858 | **HF457470** | CARBON RESISTOR | 47.0K 1/4 J AX TP | カーボン抵抗 | | | |
| R858 | **V255120R** | CARBON RESISTOR | 47.0K 1/6J 26TP | カーボン抵抗 | | | |
| R859 | **HF45610R** | CARBON RESISTOR | 1.0K 1/4 J AX TP | カーボン抵抗 | | | 01 |
| R859 | **V254920R** | CARBON RESISTOR | 1.0K 1/6 J 26TP | カーボン抵抗 | | | |
| ⚠ SW151 | **V9661700** | PUSH SWITCH | SY16-32-4(U99S2)/T | プッシュSW | STANDBY/ON | | |
| ⚠ SW151 | **VY98040R** | PUSH SWITCH | SDDLB15700 J,UC,CE | プッシュSW | | | 03 |
| ⚠ TH151 | **V8132800** | MULTI FUSE | MF-R185-AP 1.85A | マルチヒューズ | | | 02 |
| ⚠ TH151 | **VU847300** | PROTECTOR SW | RUEF185 1.85A 30V | ポリスイッチ | | | |
| TR851 | **IC174070** | TRANSISTOR | 2SC1740S R,S | トランジスタ 2SC | | | |
| TR852 | **IC174070** | TRANSISTOR | 2SC1740S R,S | トランジスタ 2SC | | | |
| VR551 | **WC70980R** | ROTARY VARIABLE RESISTOR | A 5.0K XV014111YGP | 二連ロータリーVR | MASTER VOLUME | | 02 |
| VR751 | **VZ48630R** | ROTARY VR | B10K EVJ05DF20B14 | ロータリーVR | PITCH BEND | | |
| WH153 | **--** | WIRING ASSEMBLY | STB2 4P L=230 | STB2束線 | (WG33270) | | |
| WH155 | **--** | WIRING ASSEMBLY | AMDM 13P L=120 | AMDM束線 | (WG33120) | | |
| WH551 | **--** | WIRING ASSEMBLY | VR3 5P L=230 | VR3束線 | (WG33260) | | |
| WH553 | **--** | WIRING ASSEMBLY | TWL 2P | TWL束線 | KBP-500 (WM46850) | | |
| WH556 | **--** | WIRING ASSEMBLY | TWR 2P | TWR束線 | KBP-500 (WM46860) | | |
| WH853 | **--** | WIRING ASSEMBLY | JK1 9P L=90 | JK1束線 | (WG33110) | | |
| WH855 | **--** | WIRING ASSEMBLY | PB3 3P L=100 | PB3束線 | (WG33160) | | |
| | | | | | | | |
| * | **WM294400** | CIRCUIT BOARD | DMLCD | DMLCDシート | KBP-500 (WM29430)(X9195C0) | | |
| * | **WM931000** | CIRCUIT BOARD | DMLCD | DMLCDシート | KBP-300 (WM93090)(X9195C0) | | |
| C101 | **US14510R** | CERAMIC CAPACITOR-F (CHIP) | 0.1000 25V Z RECT. | チップセラ(F) | | | 01 |
| C102 | **US14510R** | CERAMIC CAPACITOR-F (CHIP) | 0.1000 25V Z RECT. | チップセラ(F) | | | 01 |
| C103 | **WF621700** | ELECTROLYTIC CAP. (CHIP) | 47 6.3V EEEFK0J470 | チップケミコン | | | |
| C104 | **UF037100** | ELECTROLYTIC CAP.(CHIP) | 10 16V | チップケミコン | | | |
| C105 | **US14510R** | CERAMIC CAPACITOR-F (CHIP) | 0.1000 25V Z RECT. | チップセラ(F) | | | 01 |
| C106 | **US14510R** | CERAMIC CAPACITOR-F (CHIP) | 0.1000 25V Z RECT. | チップセラ(F) | | | 01 |
| C107 | **WF621700** | ELECTROLYTIC CAP. (CHIP) | 47 6.3V EEEFK0J470 | チップケミコン | | | |
| C108 | **US14510R** | CERAMIC CAPACITOR-F (CHIP) | 0.1000 25V Z RECT. | チップセラ(F) | | | 01 |
| C109 | **US14510R** | CERAMIC CAPACITOR-F (CHIP) | 0.1000 25V Z RECT. | チップセラ(F) | | | 01 |
| C110 | **WF621700** | ELECTROLYTIC CAP. (CHIP) | 47 6.3V EEEFK0J470 | チップケミコン | | | |
| C111 | **US063100** | CHIP MULTILAYER CERAMIC | 1000P 50V K RECT. | チップセラ(B) | | | |
| C112 | **US14510R** | CERAMIC CAPACITOR-F (CHIP) | 0.1000 25V Z RECT. | チップセラ(F) | | | 01 |
| -114 | **US14510R** | CERAMIC CAPACITOR-F (CHIP) | 0.1000 25V Z RECT. | チップセラ(F) | | | 01 |
| C202 | **US14510R** | CERAMIC CAPACITOR-F (CHIP) | 0.1000 25V Z RECT. | チップセラ(F) | | | 01 |

✻: New Parts

RANK: Japan only

## DMLCD

| REF NO. | PART NO. | DESCRIPTION | | 部品名 | REMARKS | QTY | RANK |
|---|---|---|---|---|---|---|---|
| C203 | **US14510R** | CERAMIC CAPACITOR-F (CHIP) | 0.1000 25V Z RECT. | チップセラ（F） | | | 01 |
| C209 | **US14510R** | CERAMIC CAPACITOR-F (CHIP) | 0.1000 25V Z RECT. | チップセラ（F） | | | 01 |
| -212 | **US14510R** | CERAMIC CAPACITOR-F (CHIP) | 0.1000 25V Z RECT. | チップセラ（F） | | | 01 |
| C215 | **US14510R** | CERAMIC CAPACITOR-F (CHIP) | 0.1000 25V Z RECT. | チップセラ（F） | | | 01 |
| C216 | **US14510R** | CERAMIC CAPACITOR-F (CHIP) | 0.1000 25V Z RECT. | チップセラ（F） | | | 01 |
| C301 | **US14510R** | CERAMIC CAPACITOR-F (CHIP) | 0.1000 25V Z RECT. | チップセラ（F） | | | 01 |
| -304 | **US14510R** | CERAMIC CAPACITOR-F (CHIP) | 0.1000 25V Z RECT. | チップセラ（F） | | | 01 |
| C305 | **UF02810R** | ELECTROLYTIC CAP. | 100 10V | チップケミコン | | | 01 |
| C306 | **US062220** | CERAMIC CAP. | 220P 50V J RECT. | チップセラ（SL） | | | |
| C307 | **US063470** | CHIP CERAMIC CAP. | 4700P 50V K RECT. | チップセラ（B） | | | 01 |
| C308 | **US14510R** | CERAMIC CAPACITOR-F (CHIP) | 0.1000 25V Z RECT. | チップセラ（F） | | | 01 |
| C309 | **US062100** | CHIP MULTILAYER CERAMIC | 100P 50V J RECT. | チップセラ（SL） | | | |
| C310 | **US061220** | CHIP MULTILAYER CERAMIC | 22P 50V J RECT. | チップセラ（CH） | | | |
| C311 | **US061220** | CHIP MULTILAYER CERAMIC | 22P 50V J RECT. | チップセラ（CH） | | | |
| C312 | **US14510R** | CERAMIC CAPACITOR-F (CHIP) | 0.1000 25V Z RECT. | チップセラ（F） | | | 01 |
| -326 | **US14510R** | CERAMIC CAPACITOR-F (CHIP) | 0.1000 25V Z RECT. | チップセラ（F） | | | 01 |
| C329 | **US14510R** | CERAMIC CAPACITOR-F (CHIP) | 0.1000 25V Z RECT. | チップセラ（F） | | | 01 |
| -332 | **US14510R** | CERAMIC CAPACITOR-F (CHIP) | 0.1000 25V Z RECT. | チップセラ（F） | | | 01 |
| C401 | **UF02810R** | ELECTROLYTIC CAP. | 100 10V | チップケミコン | | | 01 |
| C402 | **US14510R** | CERAMIC CAPACITOR-F (CHIP) | 0.1000 25V Z RECT. | チップセラ（F） | | | 01 |
| -405 | **US14510R** | CERAMIC CAPACITOR-F (CHIP) | 0.1000 25V Z RECT. | チップセラ（F） | | | 01 |
| C406 | **US062100** | CHIP MULTILAYER CERAMIC | 100P 50V J RECT. | チップセラ（SL） | | | |
| -432 | **US062100** | CHIP MULTILAYER CERAMIC | 100P 50V J RECT. | チップセラ（SL） | | | |
| C501 | **US14510R** | CERAMIC CAPACITOR-F (CHIP) | 0.1000 25V Z RECT. | チップセラ（F） | | | 01 |
| C502 | **UF037100** | ELECTROLYTIC CAP.(CHIP) | 10 16V | チップケミコン | | | |
| C504 | **UF037100** | ELECTROLYTIC CAP.(CHIP) | 10 16V | チップケミコン | | | |
| C505 | **US14510R** | CERAMIC CAPACITOR-F (CHIP) | 0.1000 25V Z RECT. | チップセラ（F） | | | 01 |
| C507 | **US063150** | CHIP MULTILAYER CERAMIC | 1500P 50V K RECT. | チップセラ（B） | | | |
| C508 | **US063150** | CHIP MULTILAYER CERAMIC | 1500P 50V K RECT. | チップセラ（B） | | | |
| C509 | **US06256R** | CERAMIC CAPACITOR-SL(CHIP) | 560P 50V J RECT. | チップセラ（SL） | | | 01 |
| -512 | **US06256R** | CERAMIC CAPACITOR-SL(CHIP) | 560P 50V J RECT. | チップセラ（SL） | | | 01 |
| C514 | **UF06610R** | ELECTROLYTIC CAP.(CHIP) | 1 50V | チップケミコン | | | 01 |
| C515 | **UF06610R** | ELECTROLYTIC CAP.(CHIP) | 1 50V | チップケミコン | | | 01 |
| C516 | **US06322R** | CHIP MULTILAYER CERAMIC | 2200P 50V K RECT. | チップセラ（B） | | | 01 |
| C517 | **US06322R** | CHIP MULTILAYER CERAMIC | 2200P 50V K RECT. | チップセラ（B） | | | 01 |
| C518 | **UF02810R** | ELECTROLYTIC CAP. | 100 10V | チップケミコン | | | 01 |
| C601 | **US14510R** | CERAMIC CAPACITOR-F (CHIP) | 0.1000 25V Z RECT. | チップセラ（F） | | | 01 |
| -604 | **US14510R** | CERAMIC CAPACITOR-F (CHIP) | 0.1000 25V Z RECT. | チップセラ（F） | | | 01 |
| C605 | **UF037100** | ELECTROLYTIC CAP.(CHIP) | 10 16V | チップケミコン | | | |
| C701 | **US062100** | CHIP MULTILAYER CERAMIC | 100P 50V J RECT. | チップセラ（SL） | | | |
| -712 | **US062100** | CHIP MULTILAYER CERAMIC | 100P 50V J RECT. | チップセラ（SL） | | | |
| C715 | **US062100** | CHIP MULTILAYER CERAMIC | 100P 50V J RECT. | チップセラ（SL） | | | |
| -725 | **US062100** | CHIP MULTILAYER CERAMIC | 100P 50V J RECT. | チップセラ（SL） | | | |
| C726 | **US063100** | CHIP MULTILAYER CERAMIC | 1000P 50V K RECT. | チップセラ（B） | | | |
| C727 | **US14510R** | CERAMIC CAPACITOR-F (CHIP) | 0.1000 25V Z RECT. | チップセラ（F） | | | 01 |
| C801 | **US14510R** | CERAMIC CAPACITOR-F (CHIP) | 0.1000 25V Z RECT. | チップセラ（F） | | | 01 |
| C802 | **US062100** | CHIP MULTILAYER CERAMIC | 100P 50V J RECT. | チップセラ（SL） | | | |
| -805 | **US062100** | CHIP MULTILAYER CERAMIC | 100P 50V J RECT. | チップセラ（SL） | | | |
| C812 | **US062100** | CHIP MULTILAYER CERAMIC | 100P 50V J RECT. | チップセラ（SL） | | | |
| C830 | **US14510R** | CERAMIC CAPACITOR-F (CHIP) | 0.1000 25V Z RECT. | チップセラ（F） | | | 01 |
| C901 | **US14510R** | CERAMIC CAPACITOR-F (CHIP) | 0.1000 25V Z RECT. | チップセラ（F） | | | 01 |
| -946 | **US14510R** | CERAMIC CAPACITOR-F (CHIP) | 0.1000 25V Z RECT. | チップセラ（F） | | | 01 |
| C948 | **US14510R** | CERAMIC CAPACITOR-F (CHIP) | 0.1000 25V Z RECT. | チップセラ（F） | | | 01 |
| -950 | **US14510R** | CERAMIC CAPACITOR-F (CHIP) | 0.1000 25V Z RECT. | チップセラ（F） | | | 01 |
| CN101 | **VK02570R** | WIRE TRAP | 52147 13P TE | ワイヤートラップ | | | 01 |
| CN401 | **WC199700** | CONNECTOR, FFC/FPC | 52808 27P TE | FFC／FPCコネクター | | | |
| CN701 | **VJ86160R** | CONNECTOR | 52147 16P TE | ワイヤートラップ | | | 01 |
| CN703 | **VJ86160R** | CONNECTOR | 52147 16P TE | ワイヤートラップ | | | 01 |
| CN801 | **WC194500** | CONNECTOR, FFC/FPC | 52808 6P TE | FFC／FPCコネクター | | | |
| CN803 | **VK025300** | WIRE TRAP | 52147 9P TE | ワイヤートラップ | | | |
| D701 | **VT332900** | DIODE | 1SS355 TE-17 TP | ダイオード | | | |
| D701 | **WG139300** | DIODE | KDS4148U-RTK/P TE- | ダイオード | | | |
| D803 | **VT332900** | DIODE | 1SS355 TE-17 TP | ダイオード | | | |
| -810 | **VT332900** | DIODE | 1SS355 TE-17 TP | ダイオード | | | |
| D803 | **WG139300** | DIODE | KDS4148U-RTK/P TE- | ダイオード | | | |
| -810 | **WG139300** | DIODE | KDS4148U-RTK/P TE- | ダイオード | | | |
| IC101 | **X6959A00** | IC | RH5RZ50CA-T1-F | IC | REGULATOR +5V | | 02 |
| IC102 | **X5889A0R** | IC | BA33BC0FP | IC | REGULATOR +3.3V | | 03 |
| IC103 | **X3679A0R** | IC | RH5RZ25CA-T1-F | IC | REGULATOR +2.5V | | 03 |
| * IC201 | **X9372200** | IC | MR27V12852L-10HTA0 | IC | KBP-500 P2 ROM 128M PROG./WAVE | | |

✻: New Parts

RANK: Japan only

# DMLCD

| | REF NO. | PART NO. | DESCRIPTION | | 部品名 | REMARKS | QTY | RANK |
|---|---|---|---|---|---|---|---|---|
| * | IC201 | **X9476200** | IC | MR27V12852L-10JTA0 | IC | KBP-300 P2 ROM 128M PROG./WAVE | | |
| | IC204 | **X2725A0R** | IC | MSM51V4265E-60T3-K | IC | DRAM 4M | | 05 |
| | IC204 | **X2726A0R** | IC | GLT440L16P-40TC DR | IC | | | 05 |
| | IC204 | **X6504B00** | IC | M11L416256SA-35TG | IC | | | |
| | IC206 | **X7130A0R** | IC | MX29LV400CBTC-70G | IC | FLASH ROM 4M | | 04 |
| | IC207 | **X5647A00** | IC | SN74LV32APWR | IC | OR | | 01 |
| | IC301 | **X6055A0R** | IC | YMW767-VTZ | IC | CPU (SWL01B) | | 07 |
| | IC302 | **X4374A0R** | IC | S-80136ANMC-JCVT2G | IC | SYSTEM RESET | | 01 |
| | IC302 | **X5888A0R** | IC | BD45365G | IC | | | 01 |
| | IC401 | **XZ56010R** | IC | UPD789022GB-A15-8E | IC | CPU KBS | | |
| | IC402 | **X0158A0R** | IC | SN74AHCT1G08DCKR | IC | AND GATE | | |
| | IC403 | **X0158A0R** | IC | SN74AHCT1G08DCKR | IC | AND GATE | | |
| | IC501 | **X6040A01** | IC | AK4385ET | IC | DAC | | 03 |
| | IC502 | **X7300A00** | IC | BA4510F-E2 | IC | OP AMP | | |
| | IC601 | **X3148A0R** | IC | NT3881DFG-01 | IC | LCD DRIVER | | 05 |
| | IC601 | **XZ987A0R** | IC | ML9040A-B01GAZ03A | IC | | | 05 |
| | IC801 | **X6905A00** | IC | ADC084S021CIMM | IC | ADC | | |
| | L601 | **VY65720R** | CHIP INDUCTANCE | 600 BK1608HM601-T | チップインダクタ | | | 01 |
| | L801 | **VY65720R** | CHIP INDUCTANCE | 600 BK1608HM601-T | チップインダクタ | | | 01 |
| | -804 | **VY65720R** | CHIP INDUCTANCE | 600 BK1608HM601-T | チップインダクタ | | | 01 |
| | R201 | **RD35747R** | CARBON RESISTOR (CHIP) | 47.0K 63M J RECT. | チップ抵抗 | | | 01 |
| | R202 | **RD35747R** | CARBON RESISTOR (CHIP) | 47.0K 63M J RECT. | チップ抵抗 | | | 01 |
| | R215 | **RD35747R** | CARBON RESISTOR (CHIP) | 47.0K 63M J RECT. | チップ抵抗 | | | 01 |
| | -220 | **RD35747R** | CARBON RESISTOR (CHIP) | 47.0K 63M J RECT. | チップ抵抗 | | | 01 |
| | R301 | **RD356100** | CARBON RESISTOR (CHIP) | 1.0K 63M J RECT. | チップ抵抗 | | | 01 |
| | R304 | **RD359100** | CARBON RESISTOR (CHIP) | 1.0M 63M J RECT. | チップ抵抗 | | | |
| | R305 | **RD355470** | CARBON RESISTOR (CHIP) | 470.0 63M J RECT. | チップ抵抗 | | | |
| | R306 | **RD357100** | CARBON RESISTOR (CHIP) | 10.0K 63M J RECT. | チップ抵抗 | | | 01 |
| | R307 | **RD35747R** | CARBON RESISTOR (CHIP) | 47.0K 63M J RECT. | チップ抵抗 | | | 01 |
| | R308 | **RD358100** | CARBON RESISTOR (CHIP) | 100.0K 63M J RECT. | チップ抵抗 | | | 01 |
| | R309 | **RD358100** | CARBON RESISTOR (CHIP) | 100.0K 63M J RECT. | チップ抵抗 | | | 01 |
| | R312 | **RD354470** | CARBON RESISTOR (CHIP) | 47.0 63M J RECT. | チップ抵抗 | | | |
| | R313 | **RD355100** | CARBON RESISTOR (CHIP) | 100.0 63M J RECT. | チップ抵抗 | | | |
| | R314 | **RD355100** | CARBON RESISTOR (CHIP) | 100.0 63M J RECT. | チップ抵抗 | | | |
| | R315 | **RD354470** | CARBON RESISTOR (CHIP) | 47.0 63M J RECT. | チップ抵抗 | | | |
| | R316 | **RD354470** | CARBON RESISTOR (CHIP) | 47.0 63M J RECT. | チップ抵抗 | | | |
| | R317 | **RD357100** | CARBON RESISTOR (CHIP) | 10.0K 63M J RECT. | チップ抵抗 | | | 01 |
| | -320 | **RD357100** | CARBON RESISTOR (CHIP) | 10.0K 63M J RECT. | チップ抵抗 | | | 01 |
| | R321 | **RD354470** | CARBON RESISTOR (CHIP) | 47.0 63M J RECT. | チップ抵抗 | | | |
| | R322 | **RD354470** | CARBON RESISTOR (CHIP) | 47.0 63M J RECT. | チップ抵抗 | | | |
| | R401 | **RD35747R** | CARBON RESISTOR (CHIP) | 47.0K 63M J RECT. | チップ抵抗 | | | 01 |
| | R402 | **RD355100** | CARBON RESISTOR (CHIP) | 100.0 63M J RECT. | チップ抵抗 | | | |
| | R403 | **RD355100** | CARBON RESISTOR (CHIP) | 100.0 63M J RECT. | チップ抵抗 | | | |
| | R404 | **RD355220** | CARBON RESISTOR (CHIP) | 220.0 63M J RECT. | チップ抵抗 | | | |
| | R405 | **RD355220** | CARBON RESISTOR (CHIP) | 220.0 63M J RECT. | チップ抵抗 | | | |
| | R406 | **RD358100** | CARBON RESISTOR (CHIP) | 100.0K 63M J RECT. | チップ抵抗 | | | 01 |
| | R407 | **RD358100** | CARBON RESISTOR (CHIP) | 100.0K 63M J RECT. | チップ抵抗 | | | 01 |
| | R408 | **RD355100** | CARBON RESISTOR (CHIP) | 100.0 63M J RECT. | チップ抵抗 | | | |
| | -410 | **RD355100** | CARBON RESISTOR (CHIP) | 100.0 63M J RECT. | チップ抵抗 | | | |
| | R503 | **RD356470** | CARBON RESISTOR (CHIP) | 4.7K 63M J RECT. | チップ抵抗 | | | |
| | -514 | **RD356470** | CARBON RESISTOR (CHIP) | 4.7K 63M J RECT. | チップ抵抗 | | | |
| | R515 | **RD355100** | CARBON RESISTOR (CHIP) | 100.0 63M J RECT. | チップ抵抗 | | | |
| | R516 | **RD355100** | CARBON RESISTOR (CHIP) | 100.0 63M J RECT. | チップ抵抗 | | | |
| | R517 | **RD356100** | CARBON RESISTOR (CHIP) | 1.0K 63M J RECT. | チップ抵抗 | | | 01 |
| | R518 | **RD356100** | CARBON RESISTOR (CHIP) | 1.0K 63M J RECT. | チップ抵抗 | | | 01 |
| | R519 | **RD35747R** | CARBON RESISTOR (CHIP) | 47.0K 63M J RECT. | チップ抵抗 | | | 01 |
| | R601 | **RD356150** | CARBON RESISTOR (CHIP) | 1.5K 63M J RECT. | チップ抵抗 | | | |
| | R602 | **RD355220** | CARBON RESISTOR (CHIP) | 220.0 63M J RECT. | チップ抵抗 | | | |
| | R603 | **RD354680** | CARBON RESISTOR | 68.0 63M J RECT. | チップ抵抗 | | | |
| | R604 | **RF45791R** | CARBON RESISTOR | 91.0K D RECT. | チップ抵抗 | | | |
| | R605 | **RD356220** | CARBON RESISTOR (CHIP) | 2.2K 63M J RECT. | チップ抵抗 | | | 01 |
| | -609 | **RD356220** | CARBON RESISTOR (CHIP) | 2.2K 63M J RECT. | チップ抵抗 | | | 01 |
| | R610 | **RD357100** | CARBON RESISTOR (CHIP) | 10.0K 63M J RECT. | チップ抵抗 | | | 01 |
| | R701 | **RD356100** | CARBON RESISTOR (CHIP) | 1.0K 63M J RECT. | チップ抵抗 | | | 01 |
| | -704 | **RD356100** | CARBON RESISTOR (CHIP) | 1.0K 63M J RECT. | チップ抵抗 | | | 01 |
| | R705 | **RD35747R** | CARBON RESISTOR (CHIP) | 47.0K 63M J RECT. | チップ抵抗 | | | 01 |
| | -712 | **RD35747R** | CARBON RESISTOR (CHIP) | 47.0K 63M J RECT. | チップ抵抗 | | | 01 |
| | R713 | **RD356100** | CARBON RESISTOR (CHIP) | 1.0K 63M J RECT. | チップ抵抗 | | | 01 |
| | -720 | **RD356100** | CARBON RESISTOR (CHIP) | 1.0K 63M J RECT. | チップ抵抗 | | | 01 |
| | R730 | **RD350001** | CSRBON RESISTOR (CHIP) | 0 63M J RECT. | チップ抵抗 | | | 01 |

*: New Parts

RANK: Japan only

## DMLCD and PJK and PNL/PNR/TWL/TWR and GHL88L

| REF NO. | PART NO. | DESCRIPTION | | 部品名 | REMARKS | QTY | RANK |
|---|---|---|---|---|---|---|---|
| R731 | **RD350001** | CSRBON RESISTOR (CHIP) | 0 63M J RECT. | チップ抵抗 | | | 01 |
| R746 | **RD355100** | CARBON RESISTOR (CHIP) | 100.0 63M J RECT. | チップ抵抗 | | | |
| R747 | **RD35747R** | CARBON RESISTOR (CHIP) | 47.0K 63M J RECT. | チップ抵抗 | | | 01 |
| -754 | **RD35747R** | CARBON RESISTOR (CHIP) | 47.0K 63M J RECT. | チップ抵抗 | | | 01 |
| R801 | **RD35747R** | CARBON RESISTOR (CHIP) | 47.0K 63M J RECT. | チップ抵抗 | | | 01 |
| R804 | **RD355100** | CARBON RESISTOR (CHIP) | 100.0 63M J RECT. | チップ抵抗 | | | |
| R805 | **RD356220** | CARBON RESISTOR (CHIP) | 2.2K 63M J RECT. | チップ抵抗 | | | 01 |
| R806 | **RD35747R** | CARBON RESISTOR (CHIP) | 47.0K 63M J RECT. | チップ抵抗 | | | 01 |
| -809 | **RD35747R** | CARBON RESISTOR (CHIP) | 47.0K 63M J RECT. | チップ抵抗 | | | 01 |
| R836 | **RD357100** | CARBON RESISTOR (CHIP) | 10.0K 63M J RECT. | チップ抵抗 | | | 01 |
| RA401 | **RE04610R** | RESISTOR ARRAY | 1KX4 | 抵抗アレイ | | | 01 |
| -403 | **RE04610R** | RESISTOR ARRAY | 1KX4 | 抵抗アレイ | | | 01 |
| RA401 | **WG893900** | CHIP RESISTOR ARRAY | 1608X4 1.0K J | チップ抵抗アレイ | | | |
| -403 | **WG893900** | CHIP RESISTOR ARRAY | 1608X4 1.0K J | チップ抵抗アレイ | | | |
| RA404 | **RE04722R** | RESISTOR ARRAY | 22KX4 | 抵抗アレイ | | | 01 |
| -406 | **RE04722R** | RESISTOR ARRAY | 22KX4 | 抵抗アレイ | | | 01 |
| RA404 | **WG897100** | RESISTOR ARRAY (CHIP) | 1608X4 22K J | チップ抵抗アレイ | | | |
| -406 | **WG897100** | RESISTOR ARRAY (CHIP) | 1608X4 22K J | チップ抵抗アレイ | | | |
| RA407 | **RE045100** | RESISTOR ARRAY 3216 | 100X4 | 抵抗アレイ | | | |
| -409 | **RE045100** | RESISTOR ARRAY 3216 | 100X4 | 抵抗アレイ | | | |
| RA407 | **WG891500** | CHIP RESISTOR ARRAY | 1608X4 100 J | チップ抵抗アレイ | | | |
| -409 | **WG891500** | CHIP RESISTOR ARRAY | 1608X4 100 J | チップ抵抗アレイ | | | |
| TH601 | **V9140600** | THERMISTOR | ERTJ1VT152J 1.5K | チップサーミスタ | | | |
| TR701 | **WB12320R** | TRANSISTOR ARRAY | IMB10A T110 | トランジスタアレイ | | | 05 |
| -704 | **WB12320R** | TRANSISTOR ARRAY | IMB10A T110 | トランジスタアレイ | | | 05 |
| TR705 | **VY67760R** | DIGITAL TRANSISTOR | DTC123JKA TP | デジタルトランジスタ | | | 01 |
| X301 | **WE19440R** | QUARTZ CRYSTAL UNIT | 16.9344MHz HC-49S-SM | 水晶振動子 | | | 01 |
| X401 | **WA78210R** | CERAMIC RESONATOR | 5.000MHz | セラミック振動子 | | | |
| | | | | | | | |
| * | **WK925800** | CIRCUIT BOARD | PJK | PJKシート | (WK92570)(X9120C0) | | |
| 30 | **--** | JUMPER CABLE | 0.55 TIN | ジャンパー線 | (VA07890) | 3 | |
| * CN1 | **WK843700** | FFC CONNECTOR | 52806 6P TE | FFCコネクター | | | |
| J1 | **--** | JUMPER CABLE | 0.55 TIN | ジャンパー線 | (VA07890) | | |
| JK1 | **V487480R** | CONNECTOR 6P | DINJATSUKU6P MD-S6 | ミニDINコネクタ | PEDAL UNIT | | |
| | | | | | | | |
| * | **WM774900** | CIRCUIT BOARD | PNL(PN 2/6,4/6) | PNLシート | (WM77480)(X7177C0) | | |
| * | **WM775000** | CIRCUIT BOARD | PNR(PN 1/6,3/6) | PNRシート | (WM77480)(X7177C0) | | |
| * | **WM775100** | CIRCUIT BOARD | TWL(PN 5/6,6/6) | TWLシート | KBP-500 (WM77480)(X7177C0) | | |
| * | **WM775200** | CIRCUIT BOARD | TWR(PN 5/6,6/6) | TWRシート | KBP-500 (WM77480)(X7177C0) | | |
| CN771 | **VI87940R** | CABLE HOLDER | 51048 16P TE | ケーブルホルダー | | | 01 |
| CN771 | **VY66910R** | CABLE HOLDER | 51048 16P TE | ケーブルホルダー天津 | | | |
| CN772 | **VI878500** | BASE PIN | 51048 7P TE | ケーブルホルダー | | | |
| CN773 | **VI878500** | BASE PIN | 51048 7P TE | ケーブルホルダー | | | |
| CN774 | **VI87940R** | CABLE HOLDER | 51048 16P TE | ケーブルホルダー | | | 01 |
| CN774 | **VY66910R** | CABLE HOLDER | 51048 16P TE | ケーブルホルダー天津 | | | |
| CN775 | **VI878400** | CONNECTOR, BASE PIN | 51048 6P TE | ケーブルホルダー | | | |
| CN775 | **VY66850R** | CABLE HOLDER | 51048 6P TE | ケーブルホルダー天津 | | | 01 |
| CN776 | **VI878400** | CONNECTOR, BASE PIN | 51048 6P TE | ケーブルホルダー | | | |
| CN776 | **VY66850R** | CABLE HOLDER | 51048 6P TE | ケーブルホルダー天津 | | | 01 |
| CN777 | **VK024700** | BASE PIN | 52147 3P TE | ワイヤートラップ | | | |
| D771 | **VB941200** | DIODE | 1SS133,1SS176 TE | ダイオード | | | |
| -775 | **VB941200** | DIODE | 1SS133,1SS176 TE | ダイオード | | | |
| D771 | **VV43780R** | DIODE | 1N4148(DO-34) | ダイオード 天津製 | | | 01 |
| -775 | **VV43780R** | DIODE | 1N4148(DO-34) | ダイオード 天津製 | | | 01 |
| LD751 | **V8952300** | LED | TL-20346D-R-F-13.5 | 高輝度LED中国製 | VOICE B | | |
| LD752 | **V8952300** | LED | TL-20346D-R-F-13.5 | 高輝度LED中国製 | STYLE B | | |
| LD753 | **V8952300** | LED | TL-20346D-R-F-13.5 | 高輝度LED中国製 | PORTAMENTO | | |
| R751 | **HF45468R** | CARBON RESISTOR | 68.0 1/4 J AX TP | カーボン抵抗 | | | 01 |
| R751 | **V2547800** | CARBON RESISTOR | 68.0 1/6J 26TP | カーボン抵抗 | | | |
| R753 | **HF45468R** | CARBON RESISTOR | 68.0 1/4 J AX TP | カーボン抵抗 | | | 01 |
| R753 | **V2547800** | CARBON RESISTOR | 68.0 1/6J 26TP | カーボン抵抗 | | | |
| R755 | **HF45468R** | CARBON RESISTOR | 68.0 1/4 J AX TP | カーボン抵抗 | | | 01 |
| R755 | **V2547800** | CARBON RESISTOR | 68.0 1/6J 26TP | カーボン抵抗 | | | |
| WH771 | **--** | WIRING ASSEMBLY | PN5 16P L=170 | PN5束線 | (WG33210) | | |
| WH772 | **--** | WIRING ASSEMBLY | PN7 7P L=170 | PN7束線 | (WG33230) | | |
| WH774 | **--** | WIRING ASSEMBLY | PN6 16P L=200 | PN6束線 | (WG33220) | | |
| WH775 | **--** | WIRING ASSEMBLY | PN80 6P | PN80束線 | (WM46840) | | |
| | | | | | | | |
| | **WF21250R** | CIRCUIT BOARD | GHL88L | GHL88Lシート | (WF46230)(X6244D0) | | 13 |
| CN1 | **WA61950R** | WIRE TRAP | 52151 17P SE | ワイヤートラップ | | | 01 |

*: New Parts

RANK: Japan only

## GHL88L and GHL88M and GHL88H

| REF NO. | PART NO. | DESCRIPTION | | 部品名 | REMARKS | QTY | RANK |
|---|---|---|---|---|---|---|---|
| D1 | **VB941200** | DIODE | 1SS133,1SS176 TE | ダイオード | | | |
| D5 | **VB941200** | DIODE | 1SS133,1SS176 TE | ダイオード | | | |
| -60 | **VB941200** | DIODE | 1SS133,1SS176 TE | ダイオード | | | |
| | | | | | | | |
| | **WF21260R** | CIRCUIT BOARD | GHL88M | GHL88Mシート | (WF46240)(X6245G0) | | 13 |
| CN1 | **WA61950R** | WIRE TRAP | 52151 17P SE | ワイヤートラップ | | | 01 |
| CN2 | **WG01190R** | FFC CONNECTOR | 52807SHIRI-ZU 27P | FFCコネクタ | | | |
| CN3 | **WA61950R** | WIRE TRAP | 52151 17P SE | ワイヤートラップ | | | 01 |
| D1 | **VB941200** | DIODE | 1SS133,1SS176 TE | ダイオード | | | |
| -72 | **VB941200** | DIODE | 1SS133,1SS176 TE | ダイオード | | | |
| | | | | | | | |
| | **WF21280R** | CIRCUIT BOARD | GHL88H | GHL88Hシート | (WF46250)(X6246D0) | | 12 |
| CN1 | **WA61950R** | WIRE TRAP | 52151 17P SE | ワイヤートラップ | | | 01 |
| D1 | **VB941200** | DIODE | 1SS133,1SS176 TE | ダイオード | | | |
| -48 | **VB941200** | DIODE | 1SS133,1SS176 TE | ダイオード | | | |
| | | | | | | | |
| | **X0159A0R** | SPEAKER | 3.0cm | スピーカ | KBP-500 TWEETER | 2 | 01 |
| * | **WM859600** | LCD DISPLAY | TTR2A0369-DPTDCN-C | 液晶ディスプレイ | | | |
| | **X7430A00** | SPEAKER | 12.0cm 4 ohm 10W | スピーカー | WOOFER | 2 | 07 |

✻: New Parts

RANK: Japan only

# ■ KBP-500/KBP-300 BLOCK DIAGRAM

KBP-500/KBP-300

Keyboard (GHL)
88 KEY
with touch response

GHL88L (A-1~C2) — CN1 (17P)
GHL88M (C#2~C5) — CN1 (17P), CN3 (17P)
GHL88H (C#5~C7) — CN1 (17P)
B01-B15, N11-N16, N21-N26
CN2 (27P)

PB (AMJK 6/6)
VR751
PITCH BEND
CN855 (3P)

CN777 (3P)

PNL (PN 4/6)
SW771 PA6
PB6
LED LD753 1pcs
AIN1
CN776 (6P)

CN775 (6P)

PNL (PN 2/6)
PA6
PB6
PA4,PA6,PA7,PC6
PB0-PB7
SW MATRIX ( SW 25pcs ) SW746~770
PA4
LED LD752 1pcs
LED
PITBEND
CN774 (16P)

PNR (PN 1/6)
PA0
LED LD751 1pcs
LED
SW MATRIX
KBP-500: SW 39pcs
SW701-739
KBP-300: SW 36pcs
SW701-735, 739
PA0-PA3,PA5
PB0-PB7
PB0-PB5
PA6
CN771 (16P)

CN772 (7P)

CN773 (7P)

PNR (PN 3/6)
PB0-PB5
PA6
SW MATRIX ( SW 6pcd ) SW740-745

CN703 (16P)
LED
PB0-PB7
PA0-PA7
CN701 (16P)

DMLCD
+5D
CPU (KBS) μPD789022GB IC401 (44P)
17,38
14, 15
18 22 27 28
MKS_RX
MKS_CLK
X401 5MHz CSTCR5M00G53-R0
IC402, 403 (5P)
AND GATE 3.3V→5V
MKS_ACK
MKS_IC
37
29
38 39 117
PB0-PB7
PA0-PA7
RS, ENB
30,121
+2.5V VDD
15,46,89,119
+3.3D IOVDD
24,47,66,90,120
CPU
SWL01(T)
YMW767-VTZ
IC301 (128P)
+5D
IC302 (5P)
5
RESET 4
+3.6V 50ms
16
X301
16.9344MHz
Crystal SMD-49
F Tolerance±100PPM
12
13
20-23
19,32, 35,36
67,68,123
/UWR, /LWR, /CAS
Damper_Make1
Damper_Make2
Sostenute
Soft
RXD0
TXD0
/LSI_IC
SUSTAIN
MA01-23
MD00-15
MA01-18
MD00-15
MA01-09
MD00-15
P2 ROM 128M PROG./WAVE IC201 (56P)
FLASH ROM 4M IC206 (48P)
DRAM 4M IC204 (44P)
VCC
14
12
43
37
1,6,22
+3.3D
/UCAS
/LCAS
1,2,4, 5,9,12
8,11
30,31
OR 74LV32A
IC207 (14P)
RESET

LED DRIVER TR705
LED

+3.3D
PA0-PA7
LED DRIVER TR701-704
+5D
VDD
PA0-PA7
RS, ENB
33
36,38
LCD DRIVER IC601 (80P)

+6A
REGULATOR +5V
+5D
IC101 (3P)
+5A
REGULATOR +3.3V
+3.3D
IC102 (3P)
REGULATOR +2.5V
+2.5V
IC103 (3P)
+V

+5A
14
/LSI_IC
SD0
BCLK
WCLK
SYSCK
5
3
1,2,4
DAC 24bit IC501 (16P)
11
12
9
10
L
R
+6A
8
2,3
5,6
BUFFER/ LPF IC502 (8P)
1
7
fc=27KHz

+3.3D
2
1,10
9
ADC 8bit IC801 (10P)
7
4
PITBEND
EXP_PEDAL
BCLK
WCLK
SDI

CN101 (13P)
CN155 (13P)
CN803 (9P)

LCD DISPLAY
BACK LIGHT
KBP-500: LED: 2pcs (Blue)
KBP-300: LED: 3pcs (Orange)
CN152 (2P)

AM (AMJK 1/6)
REGULATOR +6V
IC151 (3P)
+V
L
R
AM (AMJK 4/6)
VR551
MASTER VOLUME
A5KΩ
CN552 (5P)
CN551 (5P)
POWER AMP. 6W + 6W BTL LA4625
IC551 (14P)
14
13
11
1
6
9
8
L–
L+
R+
R–
JK551
PHONES/ OUTPUT
JK151
DC IN 12V
AC adaptor PA-5D

CN554 (2P)
CN553 (2P)
TWL (PN 5/6,6/6)
WOOFER L
4Ω 12cm
TWEETER L
KBP-500 only

MIDI OUT IN
SUSTAIN
JK852
JK853
JK851
I/F IC851,TR851,852
RXD0
TXD0
/LSI_IC
SUSTAIN
CN853 (9P)
MIDI (AMJK 2/6)
R+
R–
CN556 (2P)
CN555 (2P)
TWR (PN 5/6,6/6)
TWEETER R
KBP-500 only
WOOFER R
4Ω 12cm

AM (AMJK 5/6)
SW151
STANDBY/ON
CN154 (4P)
CN153 (4P)
JK856
EXP. PEDAL

CN801 (6P)
CN1 (6P)
PJK
JK1
PEDAL UNIT

28CA1-2001031209 /1

■ KBP-500/KBP-300 BLOCK DIAGRAM

## ■ KBP-500/KBP-300 OVERALL CIRCUIT DIAGRAM (DMLCD)

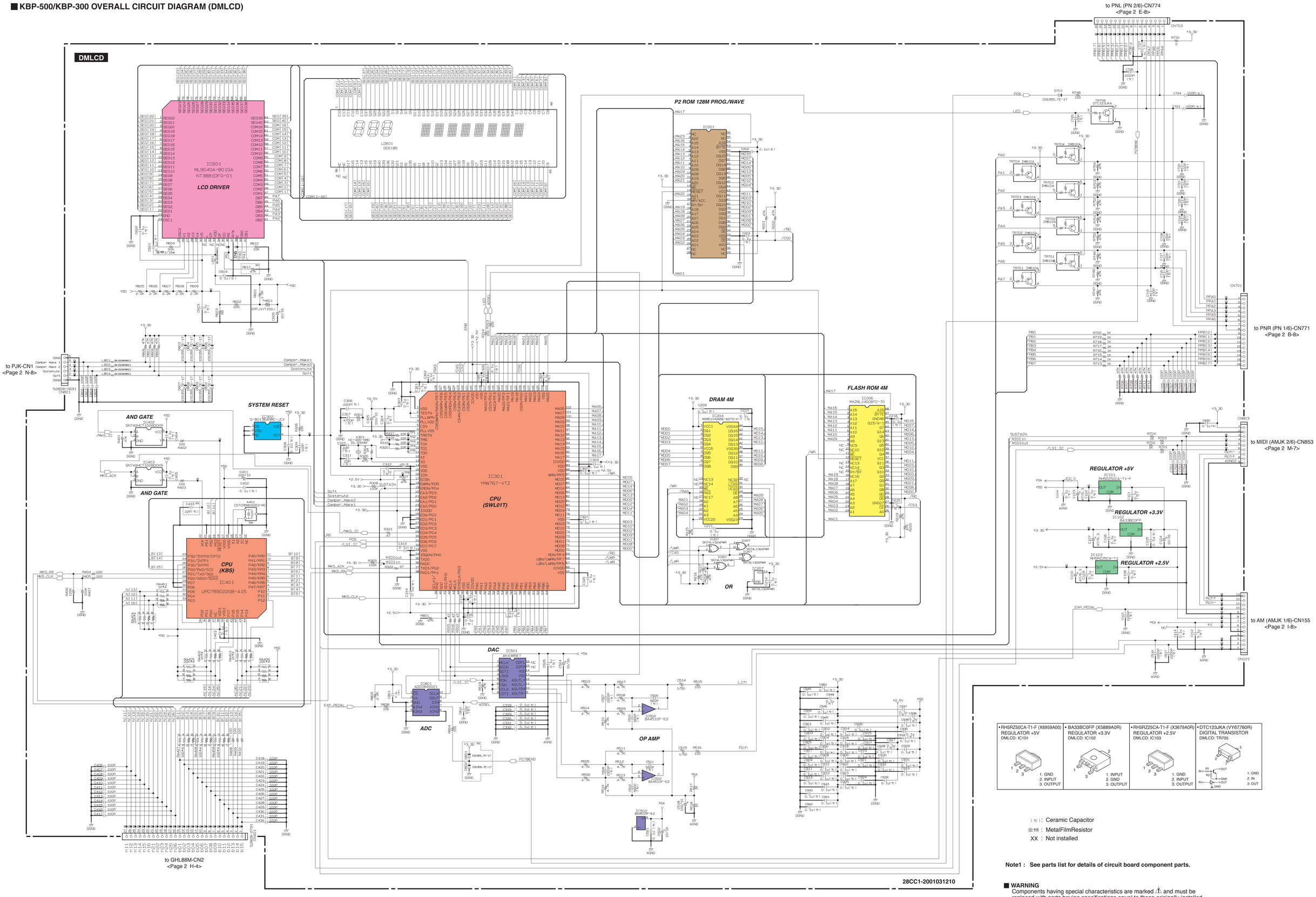


| • RH5RZ50CA-T1-F (X6959A00) REGULATOR +5V DMLCD: IC101 | • BA33BC0FP (X5889A0R) REGULATOR +3.3V DMLCD: IC102 | • RH5RZ25CA-T1-F (X3679A0R) REGULATOR +2.5V DMLCD: IC103 | • DTC123JKA (VY67760R) DIGITAL TRANSISTOR DMLCD: TR705 |
|---|---|---|---|
| 1. GND 2. INPUT 3. OUTPUT | 1. INPUT 2. GND 3. OUTPUT | 1. GND 2. INPUT 3. OUTPUT | 1: GND 2: IN 3: OUT |

(セ): Ceramic Capacitor
金被: MetalFilmResistor
XX : Not installed

**Note1 : See parts list for details of circuit board component parts.**

■ **WARNING**
Components having special characteristics are marked ⚠ and must be replaced with parts having specifications equal to those originally installed.

## ■ KBP-500/KBP-300 OVERALL CIRCUIT DIAGRAM (AM, MIDI, PB, PNL, PNR, PJK, GHL88L, GHL88M, GHL88H)

### GHL88L

(A-1~ C2)

28CC1-2000006192

### GHL88M

(C#2~ C5)

28CC1-2000006193 /2

to DMLCD-CN401
<Page 1 C-11>

### GHL88H

(C#5~ C7)

28CC1-2000006194

### PNL (PN 4/6)

28CC1-2001002847 /1

### PB (AMJK 6/6)

PITCH BEND

28CC1-2001002844 /6

### AM (AMJK 5/6)

STANDBY/ON

28CC1-2001002844 /6

WH153

### MIDI (AMJK 2/6)

IN JK853 YKF51-5050
OUT JK852 YKF51-5050
SUSTAIN JK851 YKB21-5014

PHOTO COUPLER

28CC1-2001002844 /6

WH853
to DMLCD-CN803
<Page 1 P-6>

WOOFER R
SP-R 4Ω 12cm

TWR (PN 5/6, 6/6)
28CC1-2001002847 /1
KBP-500 only
TWEETER R

### PNR (PN 1/6)

to DMLCD-CN701
<Page 1 P-5>

28CC1-2001002847 /1

### PNR (PN 3/6)

28CC1-2001002847 /1

### PNL (PN 2/6)

to DMLCD-CN703
<Page 1 N-1>

28CC1-2001002847 /1

### EXP. PEDAL

### AM (AMJK 1/6)

to DMLCD-CN101
<Page 1 P-8>

POWER SUPPLY
REGULATOR +6V
BACK LIGHT
KBP-500: not installed
KBP-300: N.C.
DC IN 12V

POWER AMP. 6W+6W

### AM (AMJK 4/6)

MASTER VOLUME

PHONES/OUTPUT

Flame Proof Carbon Resistor

### TWL (PN 5/6, 6/6)

28CC1-2001002847 /1
KBP-500 only
TWEETER L

WOOFER L
SP-L 4Ω 12cm

28CC1-2001002844 /6

### PJK

to DMLCD-CN801
<Page 1 B-5>

PEDAL UNIT

28CC1-2001029940 /1

- BA60BC0T (X6980A00)
  REGULATOR +6V
  AM: IC151
  1: INPUT
  2: GND
  3: OUTPUT

(セ): Ceramic Capacitor
(マ): Mylar Capacitor
(半セ): Semiconductive Ceramic Capacitor
XX : Not installed

**Note1 : See parts list for details of circuit board component parts.**
**Note2 : The large numbers with function are indicated the first digit of the part reference number.**

**■ WARNING**
Components having special characteristics are marked /1 and must be replaced with parts having specifications equal to those originally installed.


KBP-500/KBP-300