DIGITAL KEYBOARD

KB-180
SKB-180

SERVICE MANUAL



KB-180



SKB-180

CONTENTS

SPECIFICATIONS....3
PANEL LAYOUT....4
CIRCUIT BOARD LAYOUT & WIRING....6
DISASSEMBLY PROCEDURE....8
LSI PIN DESCRIPTION....14
IC BLOCK DIAGRAM....16
CIRCUIT BOARDS....17
TEST PROGRAM....26
INITIALIZATION....29
MIDI IMPLEMENTATION CHART....30
MIDI DATA FORMAT....31
PARTS LIST
BLOCK DIAGRAM
OVERALL CIRCUIT DIAGRAM

PK 001800

YAMAHA
HAMAMATSU, JAPAN

Copyright (c) Yamaha Corporation. All rights reserved. PDF KM DH '08.03

Downloaded from www.Manualslib.com manuals search engine

IMPORTANT NOTICE

This manual has been provided for the use of authorized Yamaha Retailers and their service personnel. It has been assumed that basic service procedures inherent to the industry, and more specifically Yamaha Products, are already known and understood by the users, and have therefore not been restated.

WARNING : Failure to follow appropriate service and safety procedures when servicing this product may result in personal injury, destruction of expensive components and failure of the product to perform as specified. For these reasons, we advise all Yamaha product owners that all service required should be performed by an authorized Yamaha Retailer or the appointed service representative.

IMPORTANT : This presentation or sale of this manual to any individual or firm does not constitute authorization certification, recognition of any applicable technical capabilities, or establish a principal-agent relationship of any form.

The data provided is belived to be accurate and applicable to the unit(s) indicated on the cover. The research engineering, and service departments of Yamaha are continually striving to improve Yamaha products. Modifications are, therefore, inevitable and changes in specification are subject to change without notice or obligation to retrofit. Should any discrepancy appear to exist, please contact the distributor's Service Division.

WARNING : Static discharges can destroy expensive components. Discharge any static electricity your body may have accumulated by grounding yourself to the ground bus in the unit (heavy gauge black wires connect to this bus.)

IMPORTANT : Turn the unit OFF during disassembly and parts replacement. Recheck all work before you apply power to the unit.

WARNING: This product contains chemicals known to the State of California to cause cancer, or birth defects or other reproductive harm.

DO NOT PLACE SOLDER, ELECTRICAL/ELECTRONIC OR PLASTIC COMPONENTS IN YOUR MOUTH FOR ANY REASON WHAT SO EVER!

Avoid prolonged, unprotected contact between solder and your skin! When soldering, do not inhale solder fumes or expose eyes to solder/flux vapor!

If you come in contact with solder or components located inside the enclosure of this product, wash your hands before handling food.

WARNING

Components having special characteristics are marked ⚠ and must be replaced with parts having specification equal to those originally installed.

SAVING DATA

Saving and backing up your data

- Data in the instrument's internal memory can be lost due to operational errors or malfunction.
  Be sure to save any important data to external media via a computer connected to the instrument.

Downloaded from www.Manualslib.com manuals search engine

SPECIFICATIONS

键盘
- 61 个标准键（ C1 - C6 ），具备力度感响应功能。

显示器
- 大屏幕多功能 LCD 显示器（ 背光型 ）

设定
- 待机 / 开
- 主音量：最小－最大

面板控制
- 伴奏音量上和下、速度上和下、伴奏、伴奏类别、功能、+/ 是、 -/ 否、力度、混响、延音、示范乐曲、双音色、分割、中国音色类别、音色、音色类别、 A-B 反复、和弦伴奏开 / 关、同步结束、暂停、同步起动、前奏 / 尾声、起动 / 停止、快退、快进、主奏 / 自动插入 A、主奏 / 自动插入 B、注册存储、音库、 [1] － [4]、乐曲编号、[录音]、[1] － [2]、 [A]

音色
- 337 种音色
  （ 包括 192 组 XG 音色 +12 组打击乐音色 +3 组 SE 音色 ）
- 最大发音数：32

伴奏
- 112 种伴奏
- 伴奏控制：和弦伴奏开／关、同步结束、同步起动、起动／停止、前奏／尾声、主奏／自动插入 A、主奏／自动插入 B
- 伴奏音量

功能按钮

效果
- 混响：9 种类型
- 叠奏：4 种类型
- 和声：26 种类型

示范乐曲
- 10 首乐曲

乐曲
- 5 首乐曲 + 闪存
- 乐曲音量

录音
- 乐曲
  用户乐曲：5 首乐曲
  录音音轨 ：1、 2、 A
- 乐曲清除、音轨清除

注册存储
- 4 个音库 x 4 个注册存储

滑音轮
- 音域 ± 1 八度

滑音
- 滑音时间：00 － 127

MIDI
- 时钟
- 初始值发送
- 本机开／关

附属插口
- 耳机／输出、直流输入 12V、 MIDI 输入／输出、延音踏板、表现踏板、

放大器
- 6.0 W x 2

扬声器
- 12cm x 2

功率消耗
- 20 W

电源
- 适配器：Yamaha PA-5D AC 电源适配器
- 电池 ：六节 “D” 号 R20P（ LR20 ）或等效电池

尺寸（ 宽×深×高 ）
- 952 x 388 x 148 mm

重量
- 6.8kg

随机附件
- 谱架
- AC 电源适配器
- 使用说明书
- 保证书

可选附件
- USB MIDI 接口：UX16
- 延音踏板：FC4、 FC5
- 表现踏板：EP-1

Downloaded from www.Manualslib.com manuals search engine

■ PANEL LAYOUT

• **Front Panel**

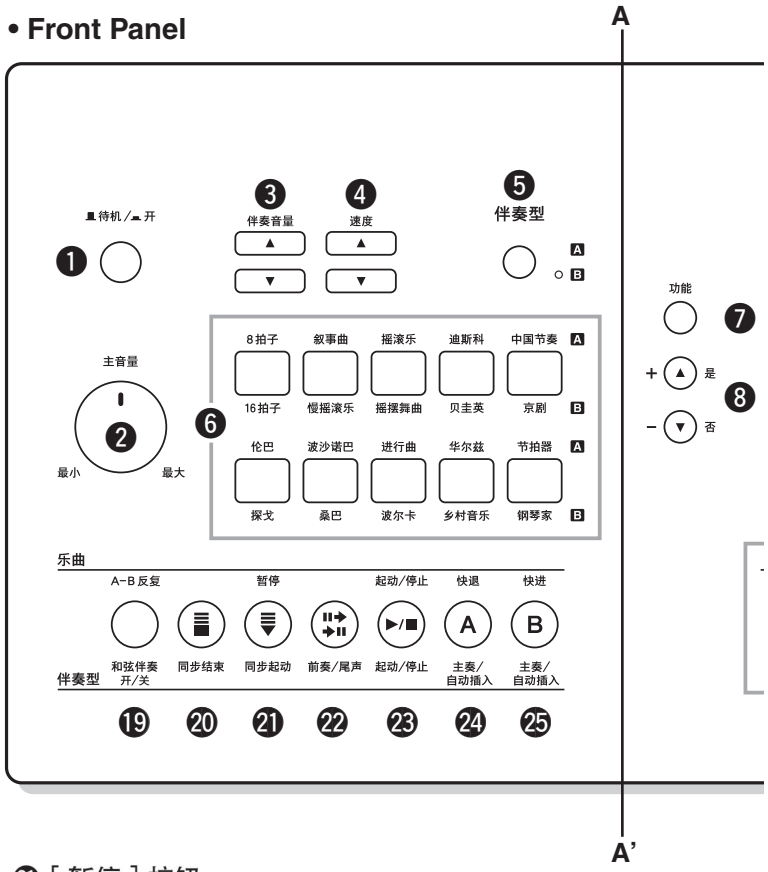

■前面板

❶ [待机/开] 开关
❷ [主音量] 旋钮
❸ 伴奏音量 [▲] 和 [▼] 按钮
❹ 速度 [▲] 和 [▼] 按钮
❺ [伴奏型] 按钮
❻ 伴奏类别按钮
❼ [功能] 按钮
❽ [**+/**是]、[**-/**否] 按钮
❾ **LCD**显示器
❿ [力度] 按钮
⓫ [混响] 按钮
⓬ [延音] 按钮
⓭ **[**示范乐曲**]**按钮
⓮ [音色] 按钮
⓯ [双音色] 按钮
⓰ [音色分割] 按钮
⓱ 中国音色类别按钮
⓲ 音色类别按钮
⓳ [**A-B**反复] 按钮
[和弦伴奏开**/**关] 按钮
⓴ [同步结束] 按钮
㉑ [暂停] 按钮
[同步起动] 按钮
㉒ [前奏**/**尾声] 按钮
㉓ **[**起动**/**停止**]** 按钮
㉔ [快退] 按钮
[主奏**/**自动插入**A**] 按钮
㉕ [快进] 按钮
[主奏**/**自动插入**B**] 按钮
㉖ 注册存储 [存储]、[音库]、
[1]-[4] 按钮
㉗ 乐曲存储 [乐曲编号]、[录音]、
[1]、 **[2]**、 **[A]**按钮
㉘ 打击乐器组图标
㉙ **[PORTAMENTO]** （滑音）按钮
㉚ **[PITCH BEND]**（滑音）轮

■后面板

㉛ **MIDI**输入**/**输出端口
㉜ 延音踏板插口
㉝ 表现踏板插口
㉞ 耳机**/**输出插口
㉟ 直流输入**12V**插口

Downloaded from www.Manualslib.com manuals search engine

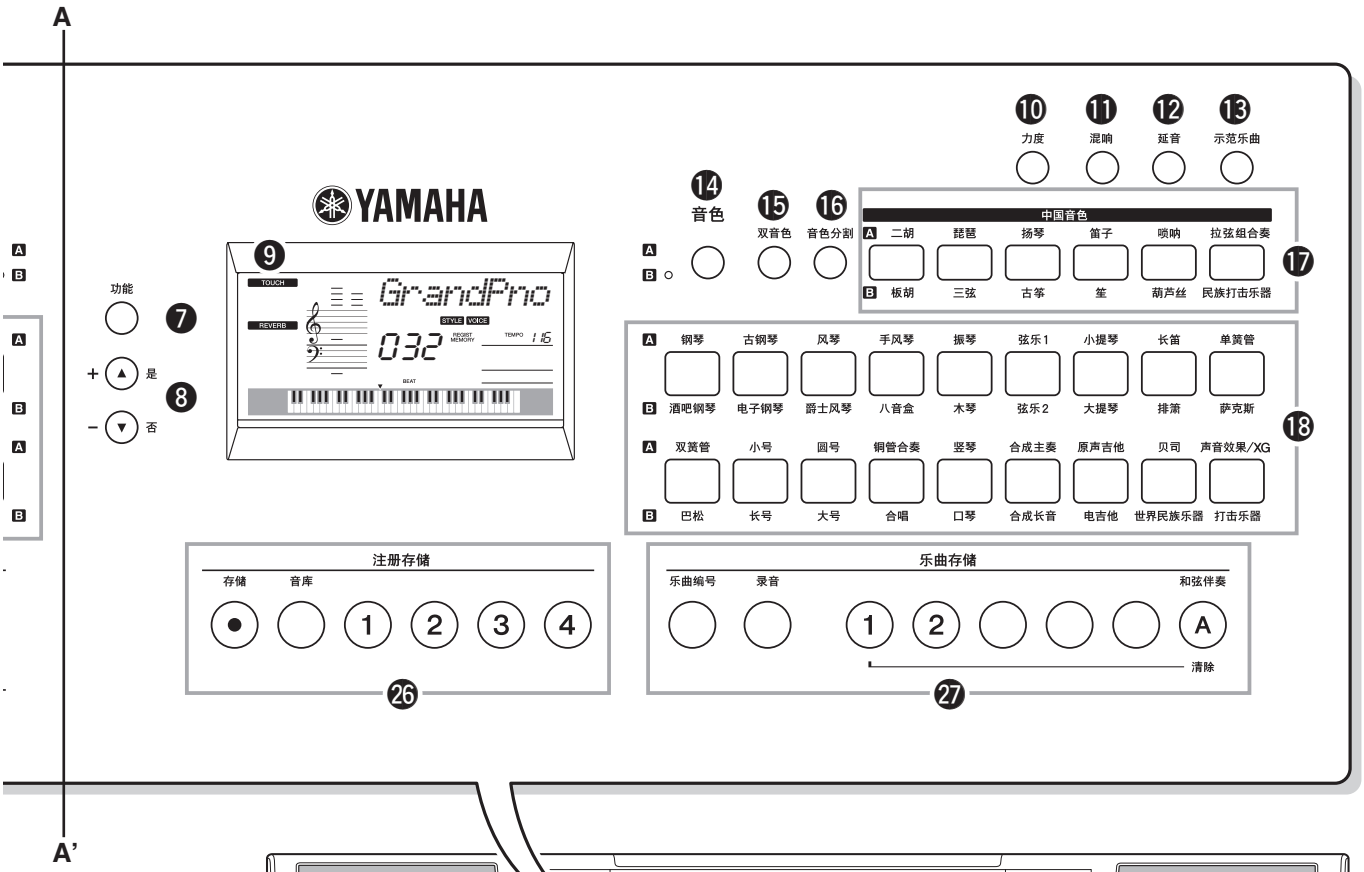

• Rear Panel



Downloaded from www.Manualslib.com manuals search engine

CIRCUIT BOARD LAYOUT & WIRING

• **Lower case assembly**

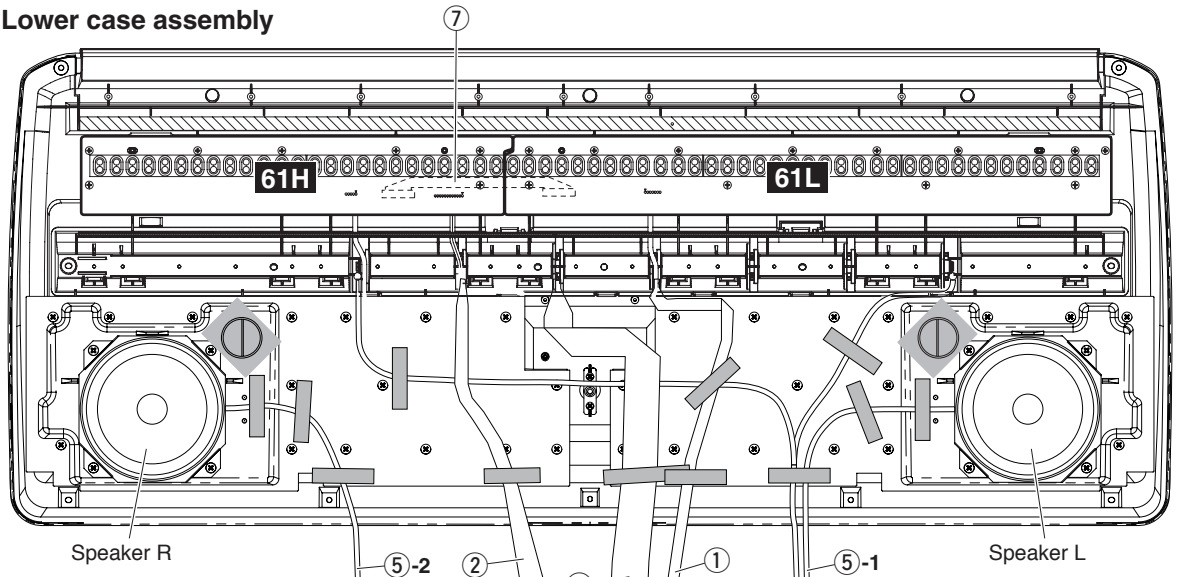

• **Upper case side**

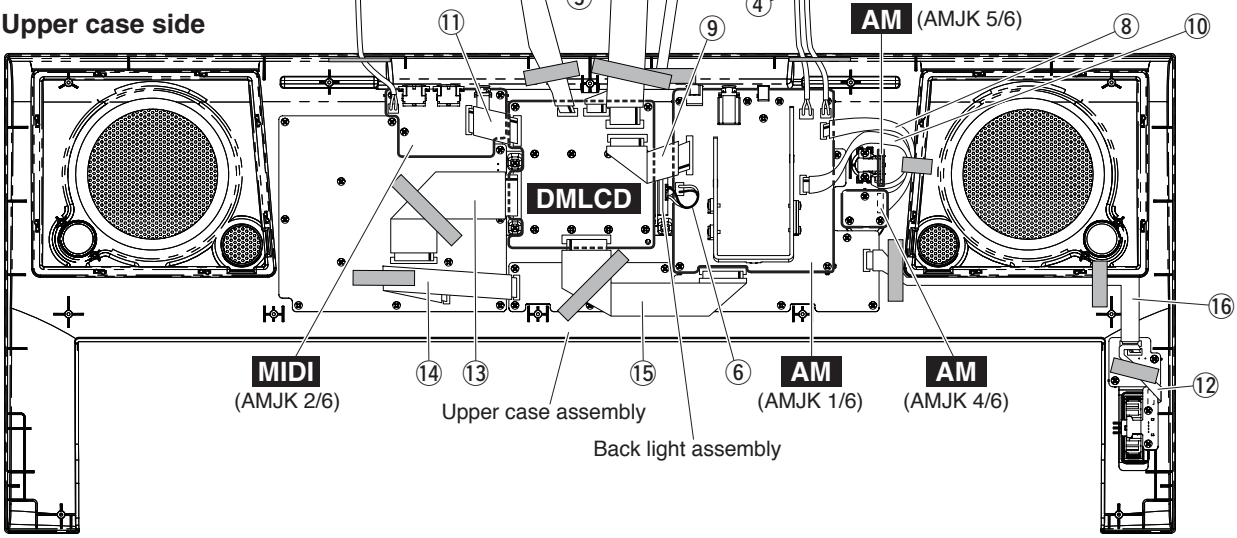

• **Upper case side**

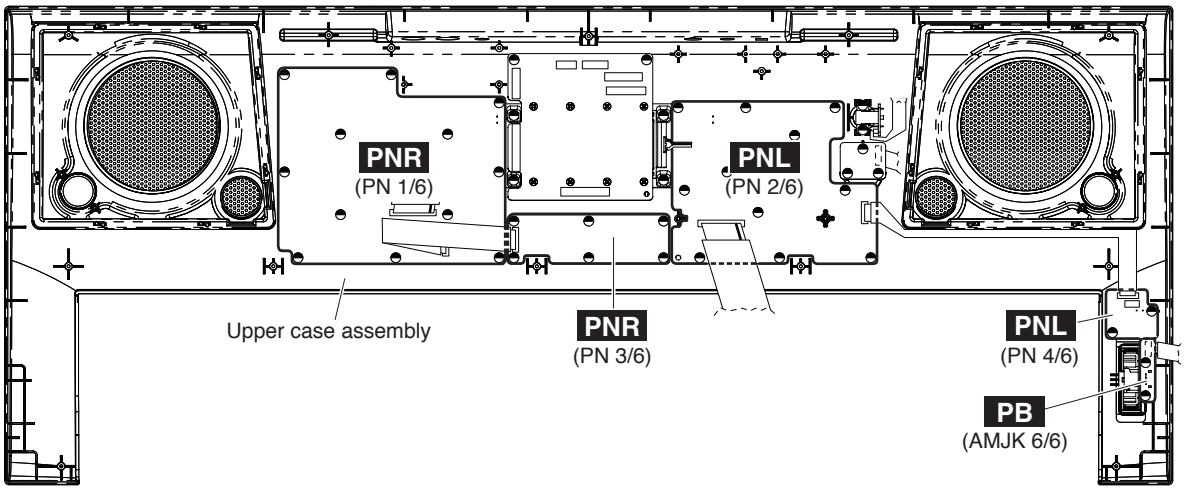

Downloaded from www.Manualslib.com manuals search engine

No.	Unit name	Location	Part No.	Connector assembly	Destination						Remarks
①	Lower case assembly	30	WC601200	MK3	61L-CN5	*1	*4	DMLCD-CN402	*1	*4	7P L=550
②		40	WG343000	MK2	61H-CN2	*1	*4	DMLCD-CN403	*1	*4	5P L=500
③		50	WC601000	MK1	61H-CN1	*1	*4	DMLCD-CN401	*1	*4	12P L=600
④		130	(V873560)	BAT	Spring terminal (+)	*2	*5	AM-CN151	*1	*6	2P
					Spring terminal (-)	*2	*5				
⑤**-1**		220	(WG32410)	SPL	Speaker L	*2	*6	AM-CN554	*1	*6	2P
⑤**-2**					Speaker R	*2	*6	MIDI-CN555	*1	*6	2P
⑥	LCD unit	L40	(WC60260)	BL	Back light assembly	*2	*7	AM-CN152	*1	*4	2P L=70
⑦	Keyboard assembly	175	V8696200		61H-CN3	*1	*4	61L-CN4	*1	*4	12P L=210
⑧	AM circuit board	WH153	(WG33270)	STB2	AM-CN153	*3	*4	AM-CN154	*3	*4	4P L=230
⑨		WH155	(WG33120)	AMDM	AM-CN155	*3	*4	DMLCD-CN101	*1	*4	13P L=120
⑩		WH551	(WG33260)	VR3	AM-CN551	*3	*4	AM-CN552	*3	*4	5P L=230
⑪	MIDI circuit board	WH853	(WG33110)	JK	MIDI-CN853	*3	*4	DMLCD-CN803	*1	*4	9P L=90
⑫	PB circuit board	WH855	(WG33160)	PB3	PB-CN855	*3	*4	PNL-CN777	*1	*4	3P L=100
⑬	PNR circuit board	WH771	(WG33210)	PN5	PNR-CN771	*3	*4	DMLCD-CN701	*1	*4	16P L=170
⑭		WH772	(WG33230)	PN7	PNR-CN772	*3	*4	PNR-CN773	*3	*4	7P L=170
⑮	PNL circuit board	WH774	(WG33220)	PN6	PNL-CN774	*3	*4	DMLCD-CN703	*1	*4	16P L=200
⑯		WH775	(WG33240)	PN8	PNL-CN775	*3	*4	PNL-CN776	*3	*4	6P L=320

*The parts with “( )” in “**Part No.**” are not available as spare parts.

*1: Installation

*2: Manual soldering

*3: Dip soldering

*4: Edge mark is adjusted to Pin 1 mark (△ mark).

*5: Red wire is connected to (+) terminal. Black wire is connected to (-) terminal.

*6: Red wire is adjusted to Pin 1 mark (△ mark).

*7: Edge mark is adjusted to + mark.

Caution: Be sure to attach the removed filament tape just as it was before removal.

Downloaded from www.Manualslib.com manuals search engine

DISASSEMBLY PROCEDURE

Caution: Be sure to attach the removed filament tape just as it was before removal.

1. Lower Case Assembly

(Time required: About 2 minutes)

1-1 Remove the battery cover assembly. (Fig.1)

1-2 Remove the nine (9) screws marked [320] and three (3) screws marked [330]. The lower case assembly can then be removed. (Fig.1)

2. Spring Terminal

(Time required: About 2 minutes)

2-1 Remove the lower case assembly. (See procedure 1.)

2-2 Remove the connector assemblies BAT (red/black) soldered to the spring terminals (+) and (-). (Fig.2)

2-3 Unhook two (2) each hooks (A) at the bottom of the lower case assembly and pull out the respective spring terminals. (Fig.3)

<Bottom view>

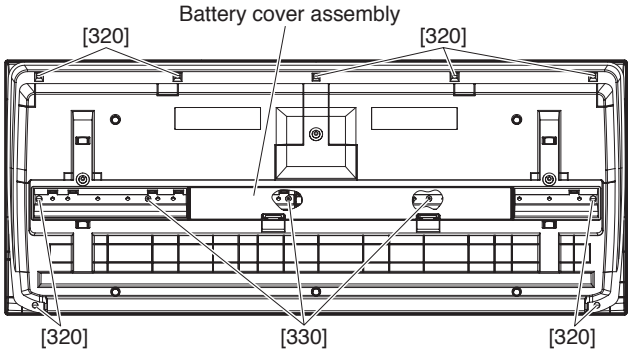

<Top view>

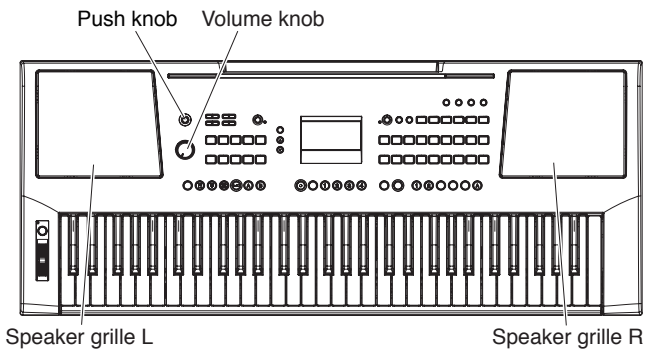

[320]: Bind Head Tapping Screw-B 3.0X12 MFZN2W3 (WE987400)
[330]: Bind Head Tapping Screw-B 3.0X30 MFZN2W3 (WF491000)

Fig. 1

• Lower case assembly

<Top view>

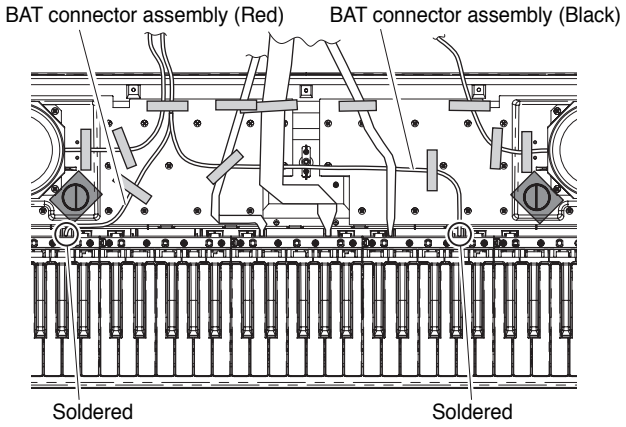

Fig. 2

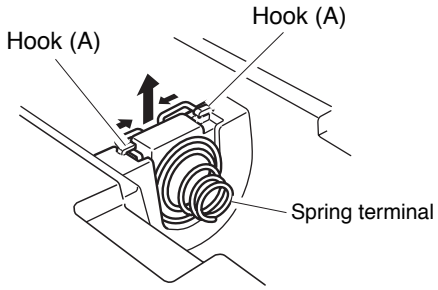

Fig. 3

Downloaded from www.Manualslib.com manuals search engine

3. AM Circuit Board
(Time required: About 4 minutes)

3-1 Remove the “MASTER VOLUME” knob as shown in Fig. 4. (Fig. 4)
3-2 Remove the screw marked [210A]. (Fig. 6)
3-3 Remove the lower case assembly. (See procedure 1.)
3-4 Remove the seven (7) screws marked [210B], three (3) screws marked [210C] and two (2) screws marked [210D]. The AM circuit board can then be removed. (Fig. 6)
3-5 Pull out the push knob from the AM circuit board. (Fig. 5)

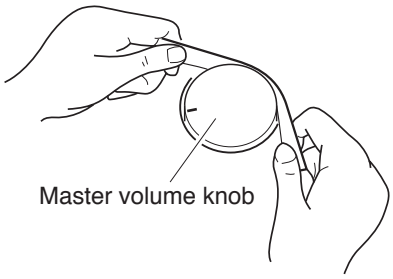

Fig. 4

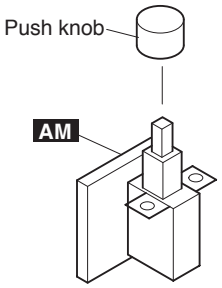

Fig. 5

4. LCD Unit (Time required: About 3 minutes)

4-1 Remove the lower case assembly. (See procedure 1.)
4-2 Remove the two (2) screws marked [210E] and four (4) screws marked [210F]. The LCD unit can then be removed. (Fig. 6)

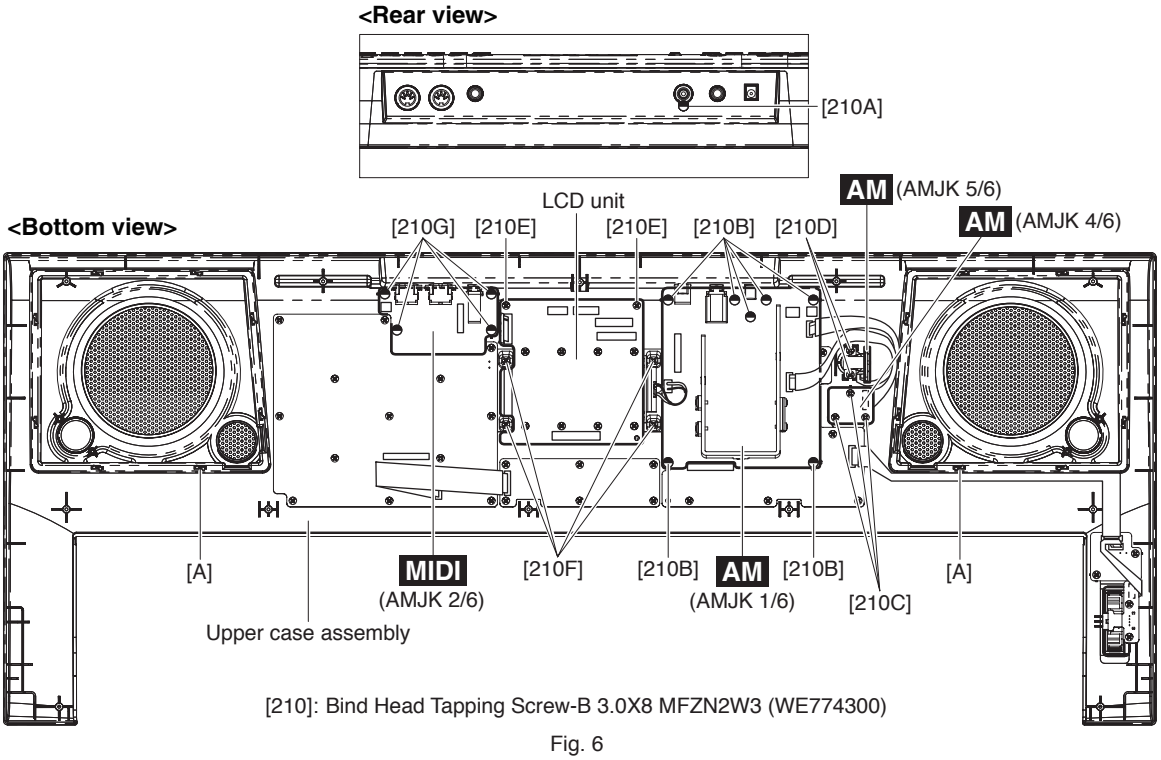

[210]: Bind Head Tapping Screw-B 3.0X8 MFZN2W3 (WE774300)

Fig. 6

Downloaded from www.Manualslib.com manuals search engine

5. DMLCD Circuit Board, Back Light Assembly and LCD (Time required: About 4 minutes)

5-1 Remove the lower case assembly. (See procedure 1.)

5-2 Remove the LCD unit. (See procedure 4.)

5-3 Remove the eight (8) screws marked [L100]. The DMLCD circuit board can then be removed from the LCD unit. (Fig. 7)

5-4 Remove the LCD, back light assembly and rubber connectors from the LCD panel. (Fig. 7)

* **When attaching the rubber connector to the LCD panel, set the conductor side to face inward. (Fig. 8)**

* **When installing the DMLCD circuit board, tighten the screws 1 through 8 in numerical order as shown in Fig. 9. (Fig. 9)**

If the DMLCD circuit board is replaced, execute the "Factory Set" in the test program.

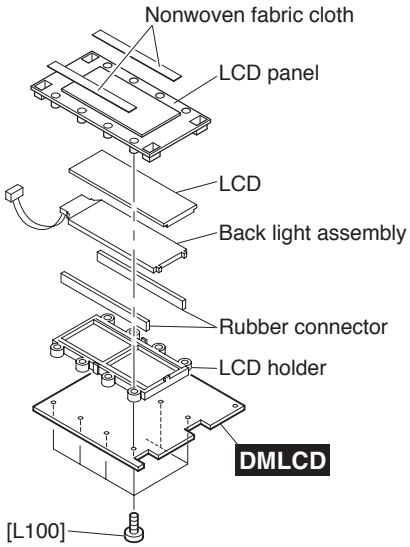

[L100]: Bind Head Tapping Screw-P 3.0X12 MFZN2W3 (WE972900)

Fig. 7

6. MIDI Circuit Board

(Time required: About 6 minutes)

6-1 Remove the lower case assembly. (See procedure 1.)

6-2 Remove the four (4) screws marked [210G]. The MIDI circuit board can then be removed. (Fig. 6)

7. PNL Circuit Board

(Time required: About 6 minutes)

7-1 Remove the lower case assembly. (See procedure 1.)

7-2 Remove the AM circuit board. (See procedure 3.)

7-3 Remove the eleven (11) screws marked [210H] and two (2) screws marked [210I]. The PNL circuit board can then be removed. (Fig. 10)

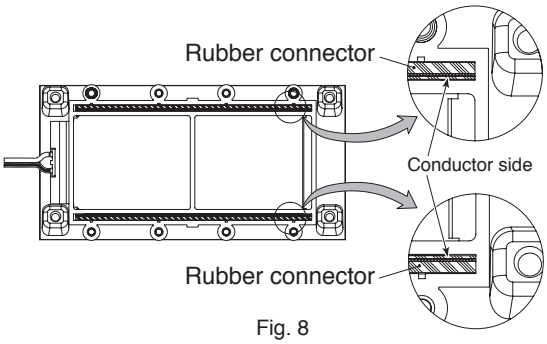

Fig. 8

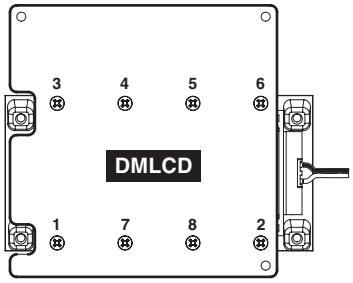

Fig. 9

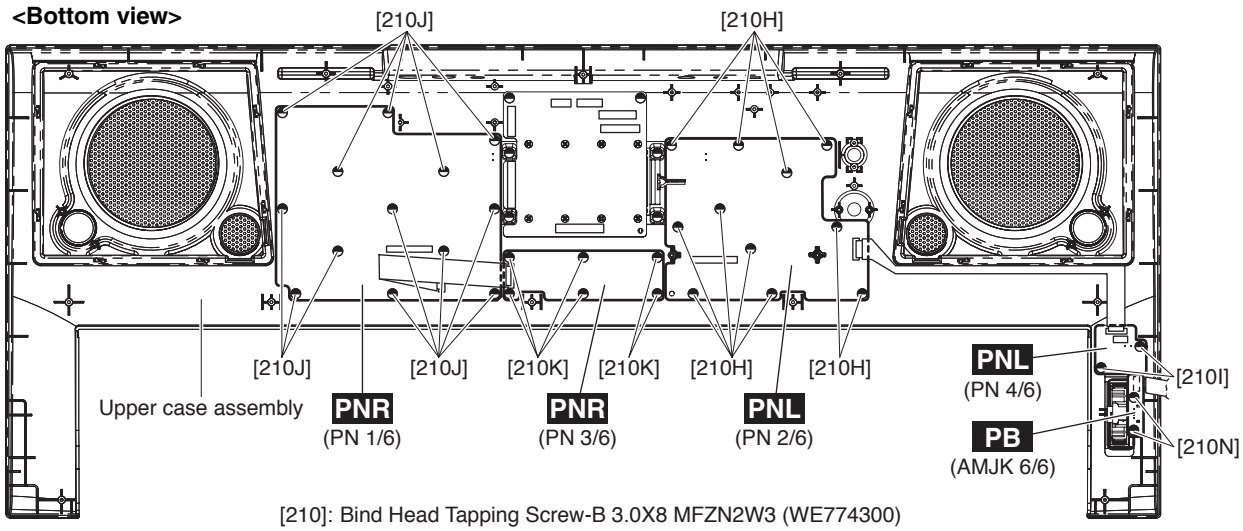

[210]: Bind Head Tapping Screw-B 3.0X8 MFZN2W3 (WE774300)

Fig. 10

Downloaded from www.Manualslib.com manuals search engine

8. PNR Circuit Board
(Time required: About 6 minutes)

8-1 Remove the lower case assembly. (See procedure 1.)

8-2 Remove the thirteen (13) screws marked [210J] and six (6) screws marked [210K]. The PNR circuit board can then be removed. (Fig. 10)

9. Speaker Grilles L and R
(Time required: About 3 minutes)

9-1 Remove the lower case assembly. (See procedure 1.)

9-2 Set the eight (8) hooks [A] parallel to the groove in the upper case assembly and remove the SP grille L. (Fig. 1, Fig. 6)

* **The speaker grille R can be removed in the same manner.**

10. PB Circuit Board and Wheel Assembly
(Time required: About 2 minutes)

10-1 Remove the lower case assembly. (See procedure 1.)

10-2 Remove the two (2) screws marked [210N] and remove the PB circuit board with the wheel assembly attached. (Fig. 10)

10-3 Pull out the wheel assembly from the PB circuit board. (Fig. 11)

11. Speakers (Time required: About 3 minutes)

11-1 Remove the lower case assembly. (See procedure 1.)

11-2 Remove the four (4) each screws marked [200A] to the right and left. The speakers to the right and left can then be removed. (Fig. 12)

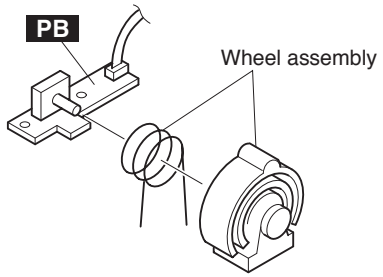

Fig. 11

• Lower case assembly

<Top view>

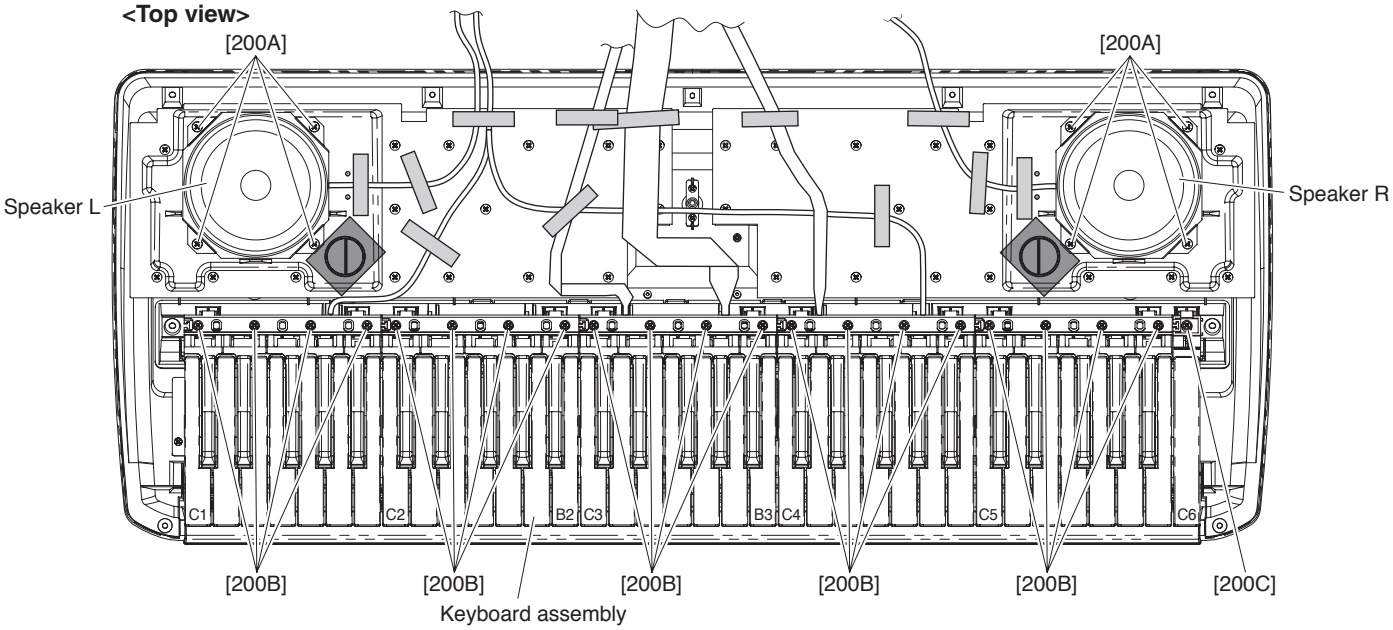

[200A]: Bind Head Tapping Screw-B 4.0X10 MFZN2W3 (WE974500)
[200B]: Bind Head Tapping Screw-P 3.0X20 MFZN2W3 (WF492000)
[200C]: Bind Head Tapping Screw-P 3.0X20 MFZN2W3 (WF492000)

Fig. 12

Downloaded from www.Manualslib.com manuals search engine

12. Disassembling Keyboard Assembly

(Time required: About 3 minutes)

12-1 Remove the lower case assembly. (See procedure 1.)

12-2 **White Keys and Black Keys:**

12-2-1 White and black keys for one octave unit are integrated as a set. There are five sets in total. Only the C6 white key, unlike the other keys, is not integrated in a set. (Fig. 12)

To remove a set, remove the four (4) each screws marked [200B]. The white and black keys in the set can then be removed. (Fig. 12)

When removing, unfasten the two (2) hooks at the back of the black keys upward, and lift the white and black keys while pulling them toward you a little. (Photo 1)

12-2-2 To remove the white key C6, remove the screw marked [200C], unhook as described in Procedure 12-2-1, and pull out toward you. (Fig. 12)

12-3 **Rubber Contacts**

12-3-1 Remove the white and black keys corresponding to the rubber contacts to be removed. (See Fig. 12 and Procedure 12-2.)

12-3-2 Remove the rubber contacts. (Photo 2, Fig. 13)

12-4 **Circuit Board 61L**

12-4-1 Remove the white and black keys from C1 to B3. (See Fig. 12 and Procedure 12-2.)

12-4-2 Remove the four (4) screws marked [180A] and eight (8) screws marked [190A]. The circuit board 61L can then be removed. (Fig. 13)

* **When installing the circuit board 61L, tighten the screws 1 through 12 in numerical order as shown in the figure for circuit board "61L" in Fig. 14. (Fig. 14)**

12-5 **Circuit Board 61H**

12-5-1 Remove the white and black keys from C4 to C6. (See Fig. 12 and Procedure 12-2.)

12-5-2 Remove the three (3) screws marked [180B] and five (5) screws marked [190B]. The circuit board 61H can then be removed. (Fig. 13)

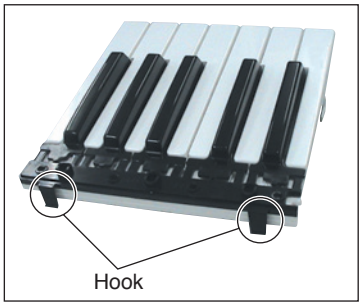

Photo 1

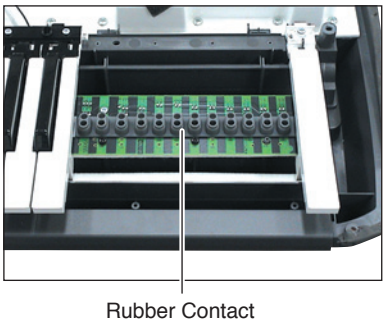

Photo 2

• Lower case assembly

<Top view>

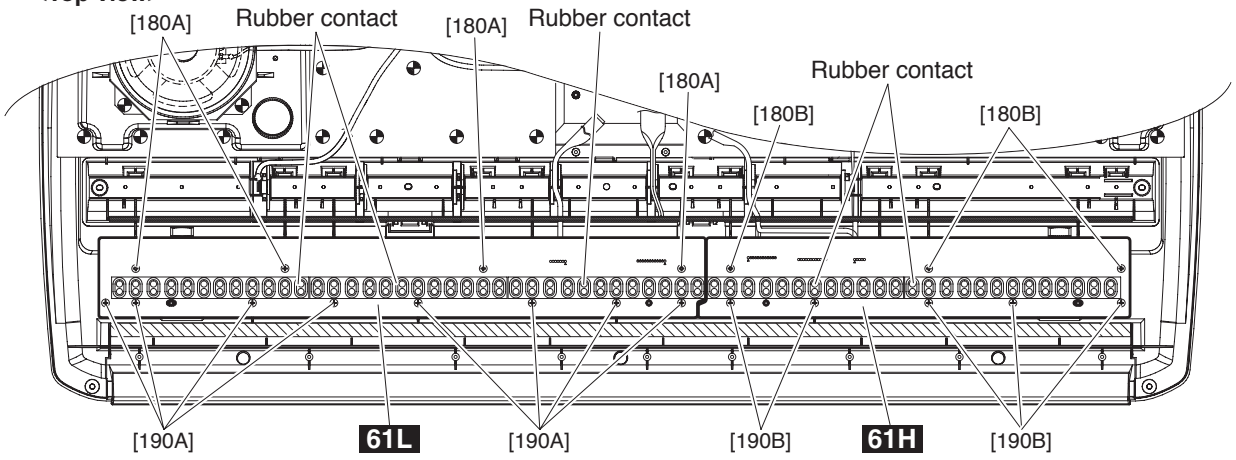

[180]: Bind Head Tapping Screw-B 3.0X8 MFZN2W3 (WE774300)
[190]: Bind Head Tapping Screw-P 3.0X12 MFZN2W3 SP (WH899400)

Fig. 13

Downloaded from www.Manualslib.com manuals search engine

* **When installing the circuit board 61H, tighten the screws 1 through 8 in numerical order as shown in the figure for circuit board "61H" in Fig. 14. (Fig. 14)**
* **When the black keys from C#2 to A#2, from C#3 to A#3 or from C#5 to A#5 are replaced, wrap the nonwoven fabric cloth (WH347400) marked [380] around the black key ribs at the screw mounting portions marked [330] described in Procedure 1. (Fig. 15)**

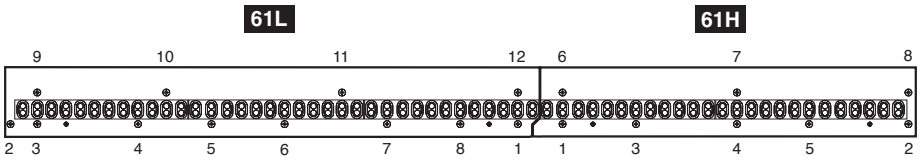

Fig. 14

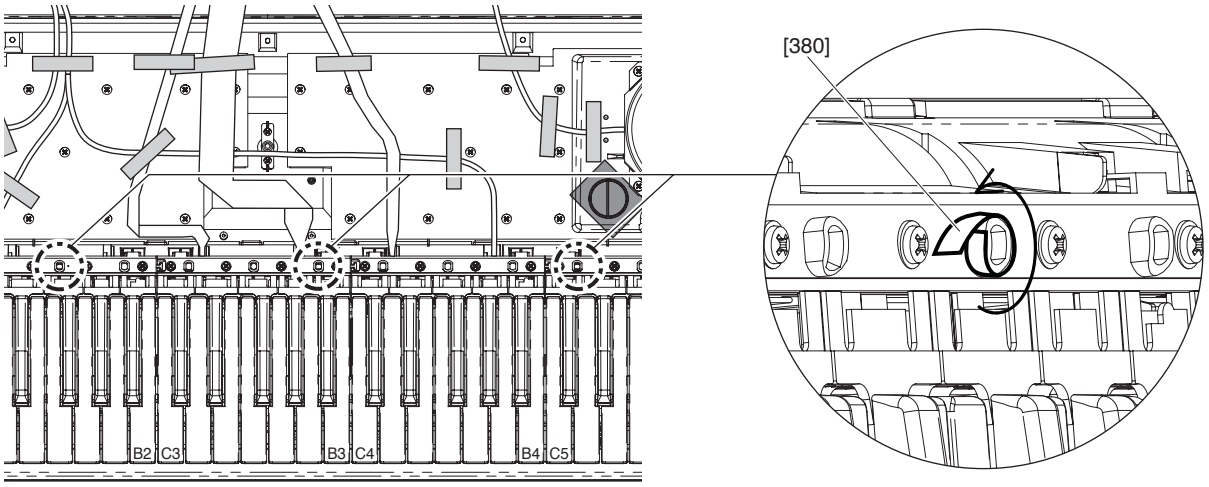

Fig. 15

Downloaded from www.Manualslib.com manuals search engine

■ LSI PIN DESCRIPTION

NT3881DFG-01 (X3148A00) LCD DRIVER.....14
ML9040A-B01GAZ03A (XZ987A00) LCD DRIVER.....14
ADC084S021CIMM (X6905A00) ADC (Analog to Digital Converter).....14
YMW767-VTZ (X6055A00) CPU (SWL01T).....15
AK4385ET (X6040A00) DAC (Digital to Analog Converter).....16

● NT3881DFG-01 (X3148A00) LCD DRIVER
● ML9040A-B01GAZ03A (XZ987A00) LCD DRIVER

DMLCD: IC601

PIN NO.	NAME	I/O	FUNCTION	PIN NO.	NAME	I/O	FUNCTION
1	S22	O	Segment signal output for LCD driving	41	DB2	I/O	Data interface
2	S21	O		42	DB3	I/O	
3	S20	O		43	DB4	I/O	
4	S19	O		44	DB5	I/O	
5	S18	O		45	DB6	I/O	
6	S17	O		46	DB7	I/O	
7	S16	O		47	C1	O	Common signal output for LCD driving
8	S15	O		48	C2	O	
9	S14	O		49	C3	O	
10	S13	O		50	C4	O	
11	S12	O		51	C5	O	
12	S11	O		52	C6	O	
13	S10	O		53	C7	O	
14	S9	O		54	C8	O	
15	S8	O		55	C9	O	
16	S7	O		56	C10	O	
17	S6	O		57	C11	O	
18	S5	O		58	C12	O	
19	S4	O		59	C13	O	
20	S3	O		60	C14	O	
21	S2	O		61	C15	O	
22	S1	O		62	C16	O	
23	GND		Ground	63	S40	O	Segment signal output for LCD driving
24	OSC1	I	Oscillator	64	S39	O	
25	OSC2	O	Oscillator	65	S38	O	
26	V1		Power supply	66	S37	O	
27	V2			67	S36	O	
28	V3			68	S35	O	
29	V4			69	S34	O	
30	V5			70	S33	O	
31	L	O	Data latch clock	71	S32	O	
32	CP	O	Data shift clock	72	S31	O	
33	Vdd		Power supply (+5 V)	73	S30	O	
34	DF	O	Altamated signal for LCD driver output	74	S29	O	
35	DO	O	Display data interface	75	S28	O	
36	RS	I		76	S27	O	
37	R/W	I	Read/write	77	S26	O	
38	E	I	Enable	78	S25	O	
39	DB0	I/O	Data interface	79	S24	O	
40	DB1	I/O	Data interface	80	S23	O	

● ADC084S021CIMM (X6905A00) ADC (Analog to Digital Converter)

DMLCD: IC801

PIN NO.	NAME	I/O	FUNCTION	PIN NO.	NAME	I/O	FUNCTION
1	$\overline{CS}$	I	Chip select	6	AIN2	I/O	Analog input
2	VA	-	Power supply +3.3 V	7	AIN1	I/O	
3	GND	-	Ground	8	DIN	I	Digital data input
4	AIN4	I/O	Analog input	9	DOUT	O	Digital data output
5	AIN3	I/O		10	SCLK	I	Digital clock input

Downloaded from www.Manualslib.com manuals search engine

● **YMW767-VTZ** (X6055A00) **CPU** (SWL01T)

DMLCD: IC301

PIN NO.	NAME	I/O	FUNCTION	PIN NO.	NAME	I/O	FUNCTION
1	Vss	-	Ground	65	Vss	-	Ground
2	TESTN	I	Input for TEST	66	IOV_{DD}	-	Power supply +3.3 V
3	PLLBPN	I	PLL bypass select	67	LBN/LWRN/PF6	O	External memory lower-byte enable / Port F
4	$PLLV_{DD}$	-	PLL Power supply +2.5 V	68	UBN/UWRN/PF7	O	External memory upper-byte enable / Port F
5	CIN	-	Capacitor terminal for PLL	69	RDN/PF4	O	External memory read enable / Port F
6	PLLVss	-	PLL Ground	70	MD00	I/O	
7	TRSTN	I		71	MD08	I/O	
8	TMS	I		72	MD01	I/O	
9	TCK	I	JTAG input	73	MD09	I/O	External memory data bus
10	TDI	I		74	MD02	I/O	
11	TDO	O	JTAG output	75	MD10	I/O	
12	XI	I	Crystal oscillator	76	MD03	I/O	
13	XO	O	Crystal oscillator	77	Vss	-	Ground
14	Vss	-	Ground	78	MD11	I/O	
15	V_{DD}	-	Power supply +2.5 V	79	MD04	I/O	
16	ICN	I	Hardware reset	80	MD12	I/O	
17	ECSN	I	CPU I/F chip select	81	MD05	I/O	
18	EWRN/PD5	I	CPU I/F write enable / Port D	82	MD13	I/O	External memory data bus
19	ERDN/PD4	I	CPU I/F read enable / Port D	83	MD06	I/O	
20	EA3/PD3	I		84	MD14	I/O	
21	EA2/PD2	I	CPU I/F address bus / Port D	85	MD07	I/O	
22	EA1/PD1	I		86	MD15	I/O	
23	EA0/PD0	I		87	WRN/PF5	O	
24	IOV_{DD}	-	Power supply +3.3 V	88	Vss	-	Ground
25	ED0/PC0	I/O		89	V_{DD}	-	Power supply +2.5 V
26	ED1/PC1	I/O		90	IOV_{DD}	-	Power supply +3.3 V
27	ED2/PC2	I/O		91	MA17	O	
28	ED3/PC3	I/O	CPU I/F data bus / Port C	92	MA16	O	
29	ED4/PC4	I/O		93	MA15	O	
30	ED5/PC5	I/O		94	MA14	O	
31	ED6/PC6	I/O		95	MA13	O	
32	ED7/PC7	I/O		96	MA12	O	
33	Vss	-	Ground	97	MA11	O	External memory address bus
34	IRQ0N/PH0	I	Interrupt input / Port H	98	MA10	O	
35	TxD0	O	Serial output	99	MA09	O	
36	RxD0	I	Serial input	100	MA08	O	
37	TxD1/PG2	O	Serial output / Port G	101	MA07	O	
38	RxD1/PH1	I	Serial input / Port H	102	MA06	O	
39	SCLK1/PH2	I	External synchronization clock / Port H	103	MA05	O	
40	SDO	O	Serial output	104	Vss	-	Ground
41	SDI/PH3	I	Serial input / Port H	105	MA04	O	
42	BCLK	O	Bit clock output	106	MA03	O	External memory address bus
43	WCLK/SYO	O	Word clock output	107	MA02	O	
44	SYSCLK/PG3	O	Clock output / Port G	108	MA01	O	
45	Vss	-	Ground	109	CS0N/PG0	O	External memory chip select / Port G
46	V_{DD}	-	Power supply +2.5 V	110	MA18	O	External memory address bus
47	IOV_{DD}	-	Power supply +3.3 V	111	MA19	O	
48	PA0	I/O		112	MA21/PF1	O	External memory address bus / Port F
49	PA1	I/O		113	MA22/PF2	O	
50	PA2	I/O		114	MA20	O	External memory address bus
51	PA3	I/O	I/O port A	115	MA23/PF3	O	External memory address bus / Port F
52	PA4	I/O		116	CSIN/PG1	O	External memory chip select / Port G
53	PA5	I/O		117	MA00/PF0	O	External memory address bus / Port F
54	PA6	I/O		118	Vss	-	Ground
55	PA7	I/O		119	V_{DD}	-	Power supply +2.5 V
56	Vss	-	Ground	120	IOV_{DD}	-	Power supply +3.3 V
57	PB0	I/O		121	CS2N/PE0	O	
58	PB1	I/O		122	CS3N/PE1	O	
59	PB2	I/O		123	CS4N/CASN/PE2	O	
60	PB3	I/O	I/O port B	124	CS5N/PE3	O	External memory chip select / Port E
61	PB4	I/O		125	CS50RDN/PE4	O	
62	PB5	I/O		126	CS51WRN/PE5	O	
63	PB6	I/O		127	CS52WRN/PE6	O	
64	PB7/SYI	I/O		128	CS53WRN/RASN/PE7	O	

Downloaded from www.Manualslib.com manuals search engine

● **AK4385ET** (X6040A00) **DAC** (Digital to Analog Converter)

DMLCD: IC501

PIN NO.	NAME	I/O	FUNCTION	PIN NO.	NAME	I/O	FUNCTION
1	MCLK	I	Master Clock	9	AOUTR-	O	Rch Analog out(-)
2	BICK	I	Audio Serial Data Clock	10	AOUTR+	O	Rch Analog out(+)
3	SDTI	I	Audio Serial Date Input	11	AOUTL-	O	Lch Analog out(-)
4	LRCK	I	L/R Clock	12	AOUTL+	O	Lch Analog out(+)
5	PDN	I	Power Down mode	13	Vss	-	Ground
6	CSN	I	Chip Select	14	VDD	-	Power Supply
7	CCLK	I	Control Data Input	15	DZFR	O	Rch Data Zero Input Detect
8	CDTI	I	Control Data Input	16	DZFL	O	Lch Data Zero Input Detect

■ IC BLOCK DIAGRAM

● **SN74LV32APWR** (X5647A00)
Quad 2 Input OR
DMLCD: IC207

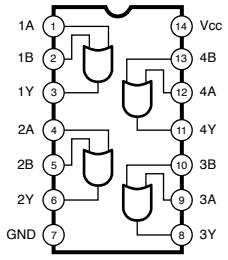

● **SN74LV138APWR** (X7284A00)
3 to 8 Demultiplexer
DMLCD: IC401, 402

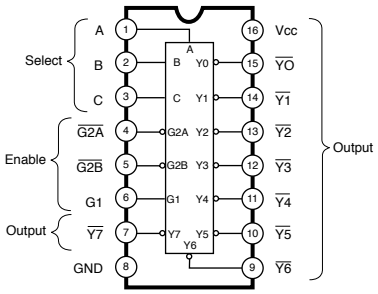

● **BA4510F-E2** (X7300A00)
Dual Operational Amplifier
DMLCD: IC502

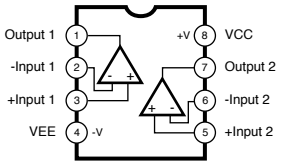

● **LA4625** (XY209A00)
Power Amplifier
AM: IC551

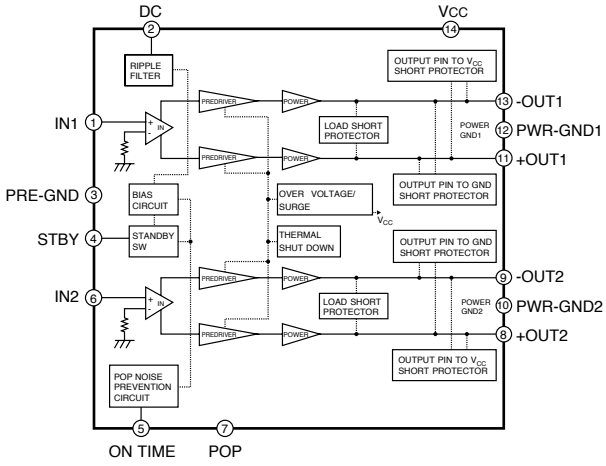

Downloaded from www.Manualslib.com manuals search engine

CIRCUIT BOARDS

AM (AMJK 1/6) Circuit Board (X7176H0) 24
AM (AMJK 4/6) Circuit Board (X7176H0) 24
AM (AMJK 5/6) Circuit Board (X7176H0) 24
MIDI (AMJK 2/6) Circuit Board (X7176H0) 17
PB (AMJK 6/6) Circuit Board (X7176H0) 20
DMLCD Circuit Board (X7174D0) 18/19
PNL (PN 2/6) Circuit Board (X7177C0) 20/21
PNL (PN 4/6) Circuit Board (X7177C0) 20/21
PNR (PN 1/6) Circuit Board (X7177C0) 22/23
PNR (PN 3/6) Circuit Board (X7177C0) 22/23
61H Circuit Board (X2335C0) 25
61L Circuit Board (X2336B0) 25

Note: See parts list for details of circuit board component parts.

● MIDI (AMJK 2/6) Circuit Board

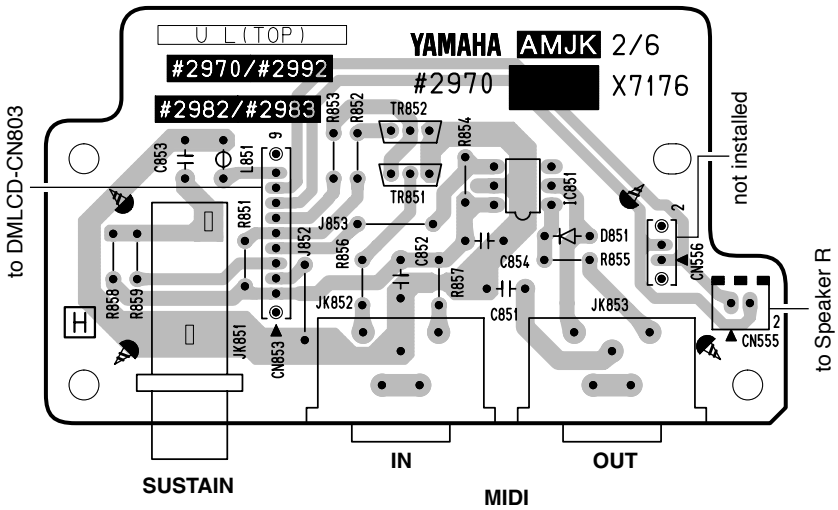

Component side

MIDI: 2NA-WG23590-1 ⚠5

Downloaded from www.Manualslib.com manuals search engine

● DMLCD Circuit Board

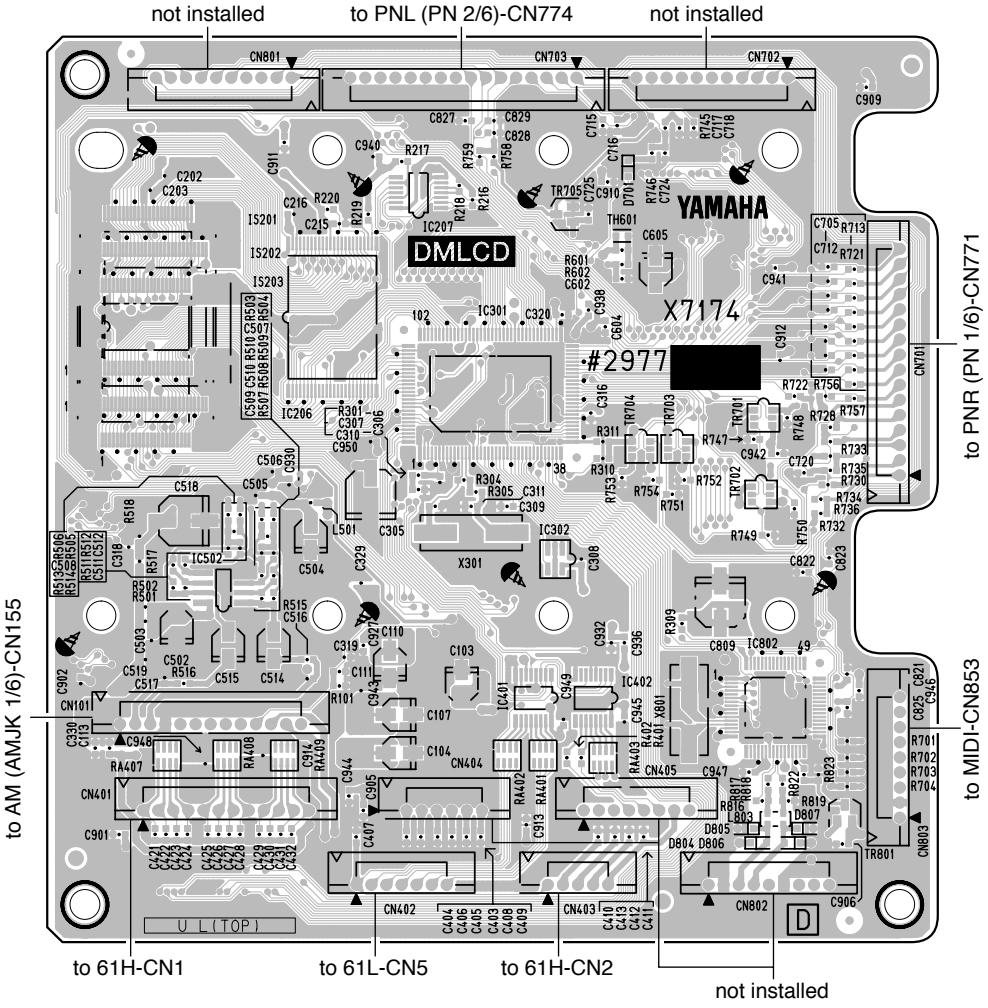

Component side

Downloaded from www.Manualslib.com manuals search engine

● DMLCD Circuit Board

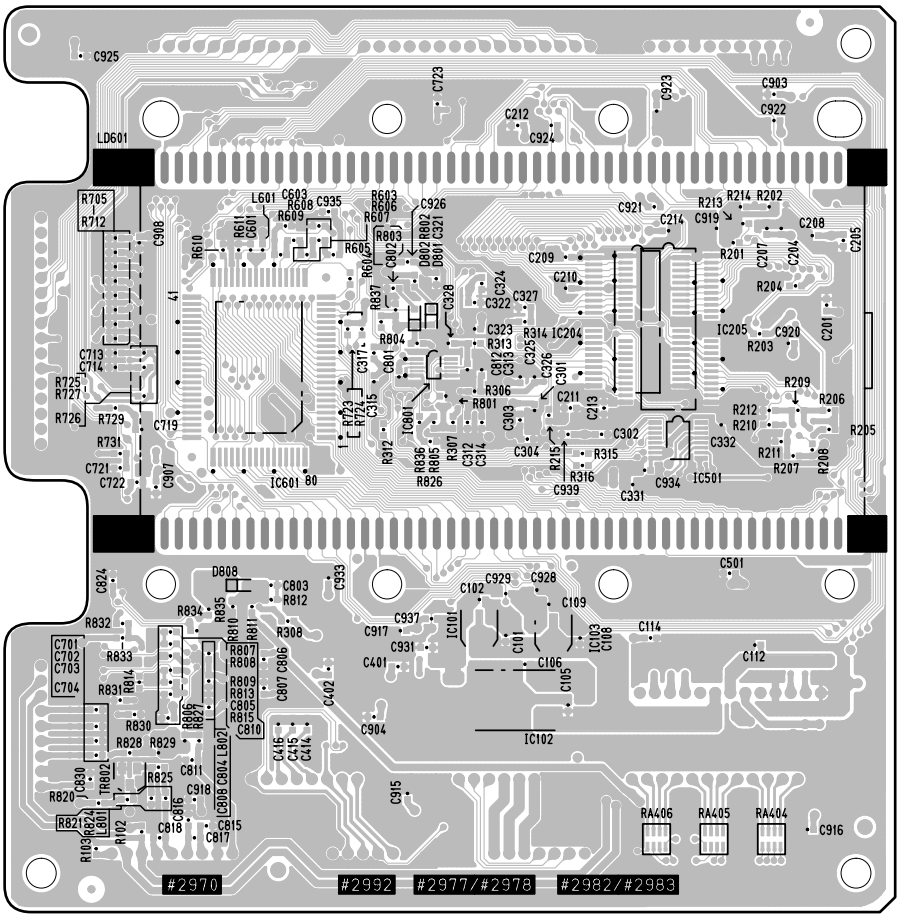

Pattern side

DMLCD: 2NA-WG23540-1 ⚠7

Downloaded from www.Manualslib.com manuals search engine

● PNL (PN 2/6) Circuit Board

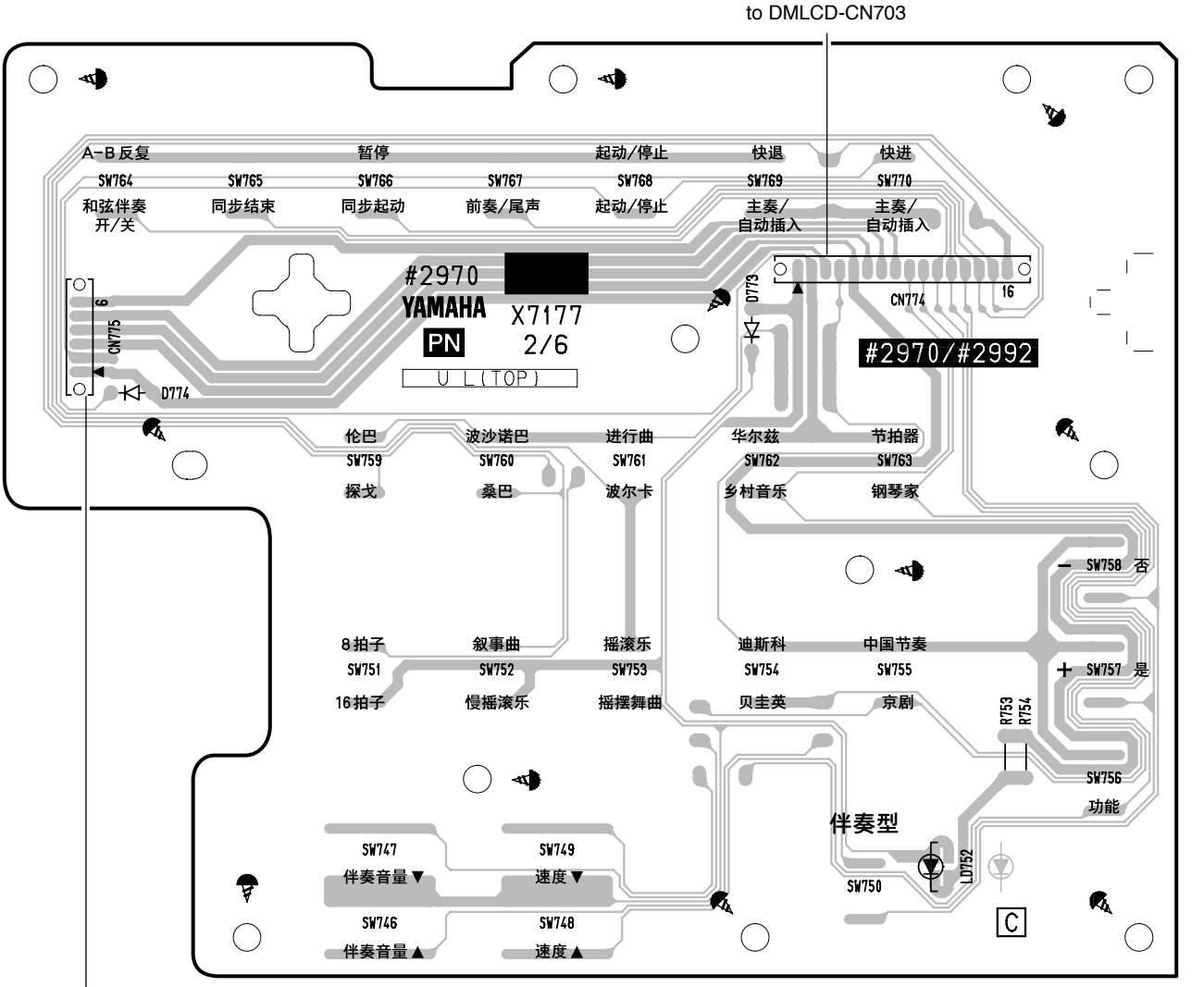

Component side

● PNL (PN 4/6) Circuit Board

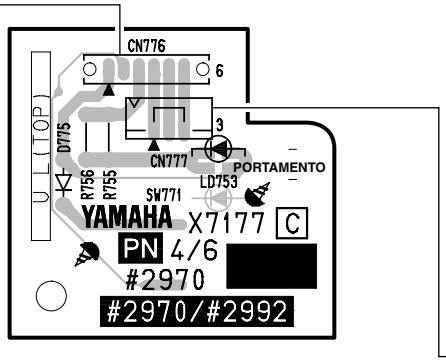

Component side

● PB (AMJK 6/6) Circuit Board

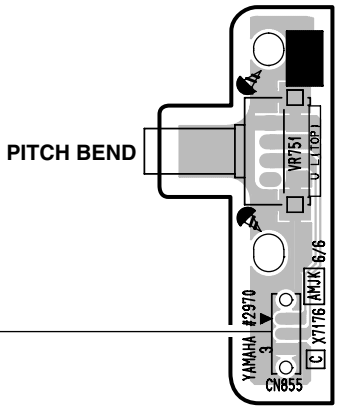

Component side

PB: 2NA-WG23590-1 ⚠5
PNL: 2NA-WG23610-1 ⚠2

Downloaded from www.Manualslib.com manuals search engine

● PNL (PN 2/6) Circuit Board

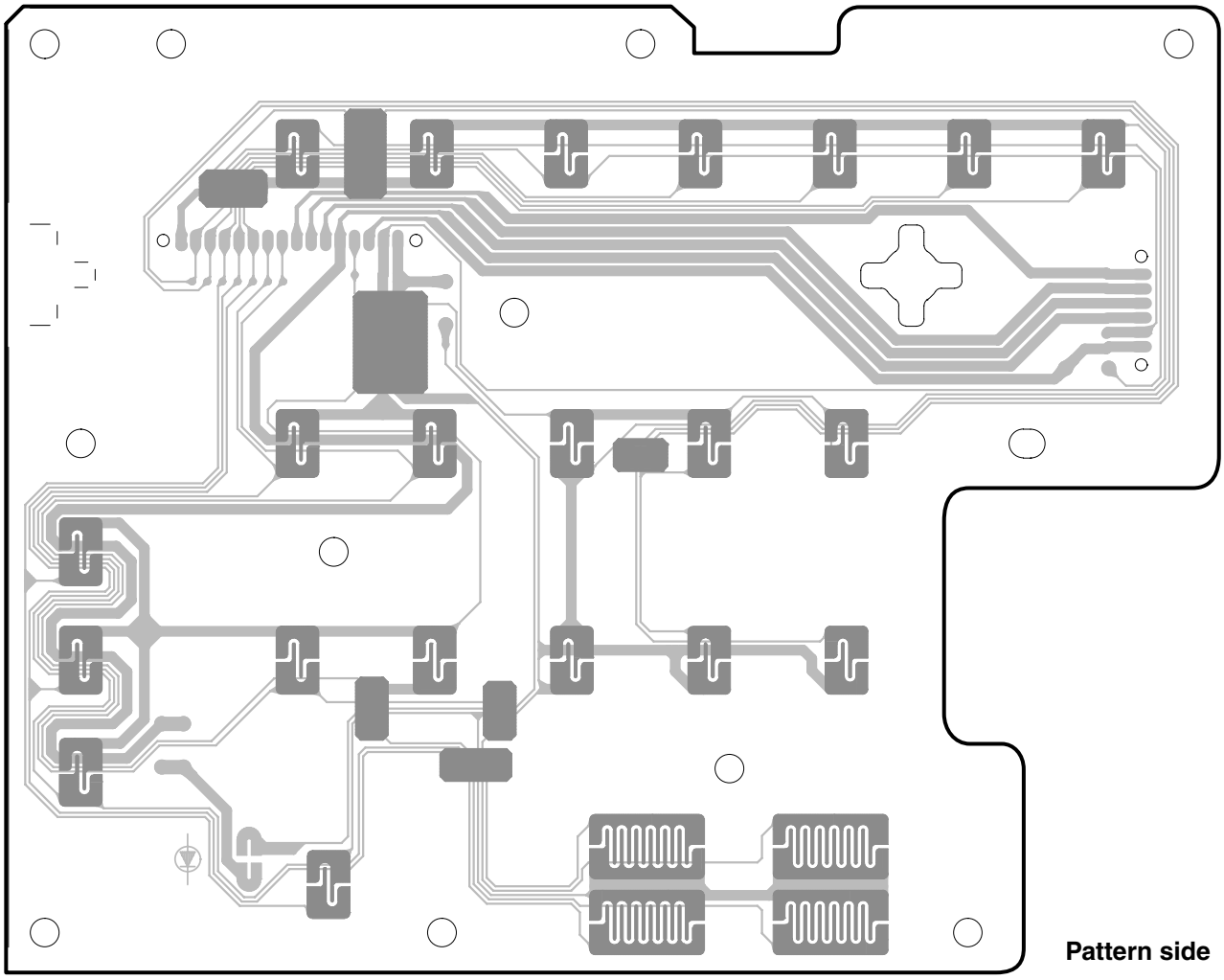

Pattern side

● PNL (PN 4/6) Circuit Board

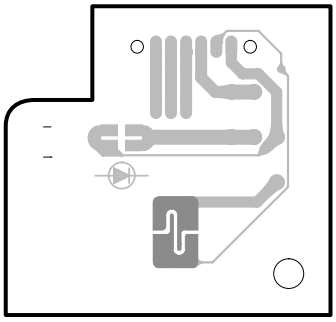

Pattern side

PB: 2NA-WG23590-1 △5
PNL: 2NA-WG23610-1 △2

Downloaded from www.Manualslib.com manuals search engine

● PNR (PN 1/6) Circuit Board

Scale: 90/100

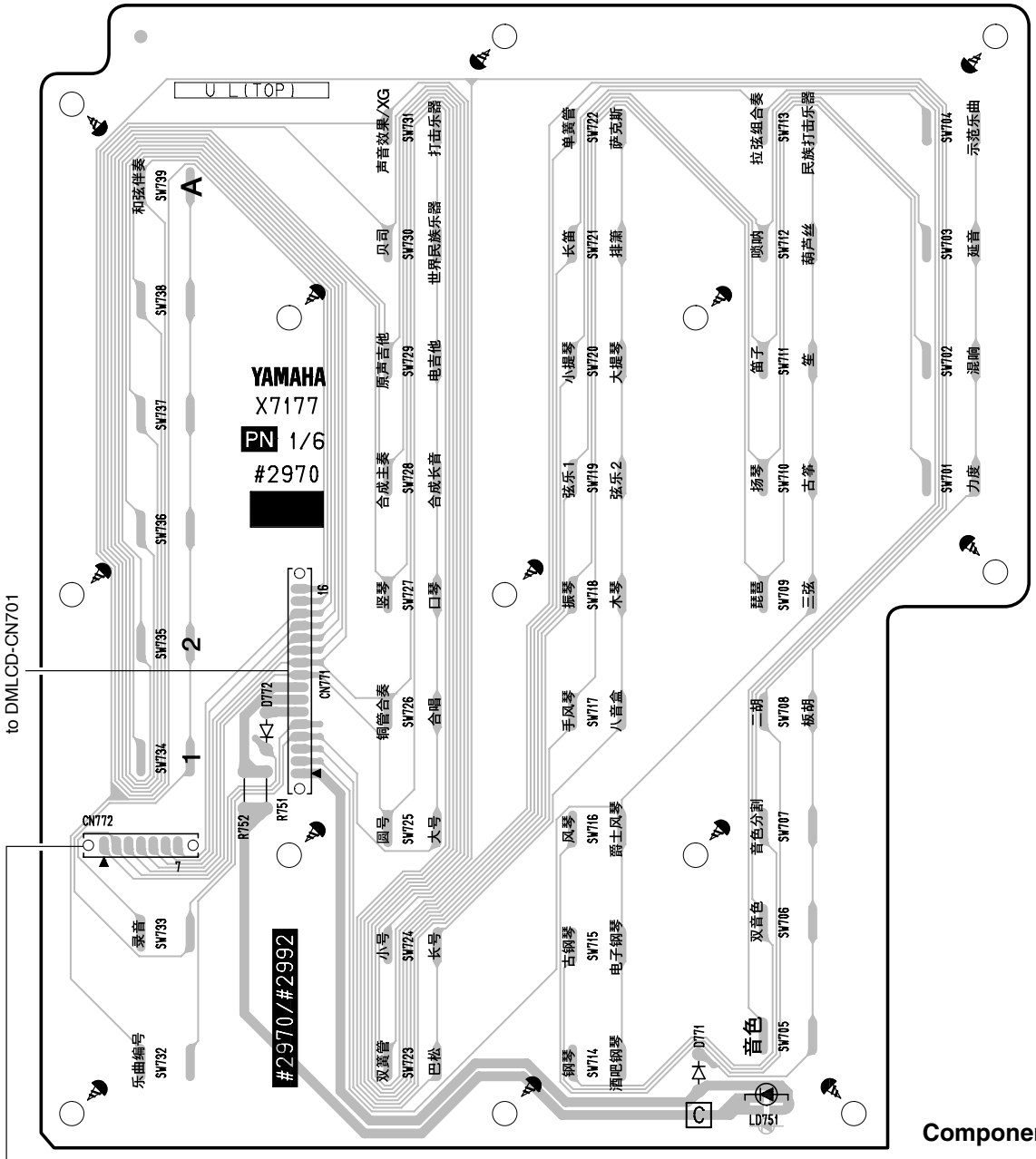

Component side

● PNR (PN 3/6) Circuit Board

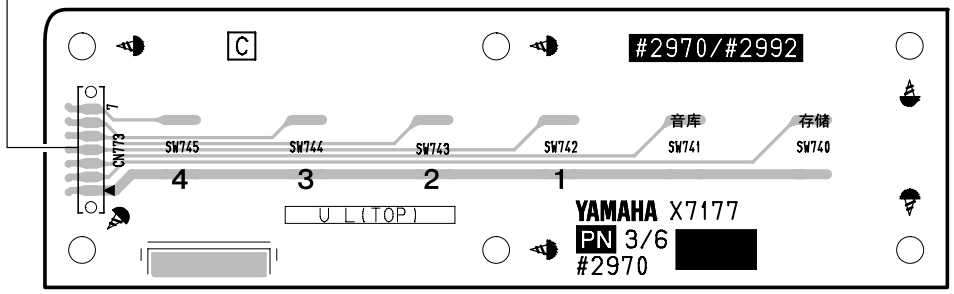

Component side

PNR: 2NA-WG23610-1 ⚠2

Downloaded from www.Manualslib.com manuals search engine

● PNR (PN 1/6) Circuit Board

Scale: 90/100

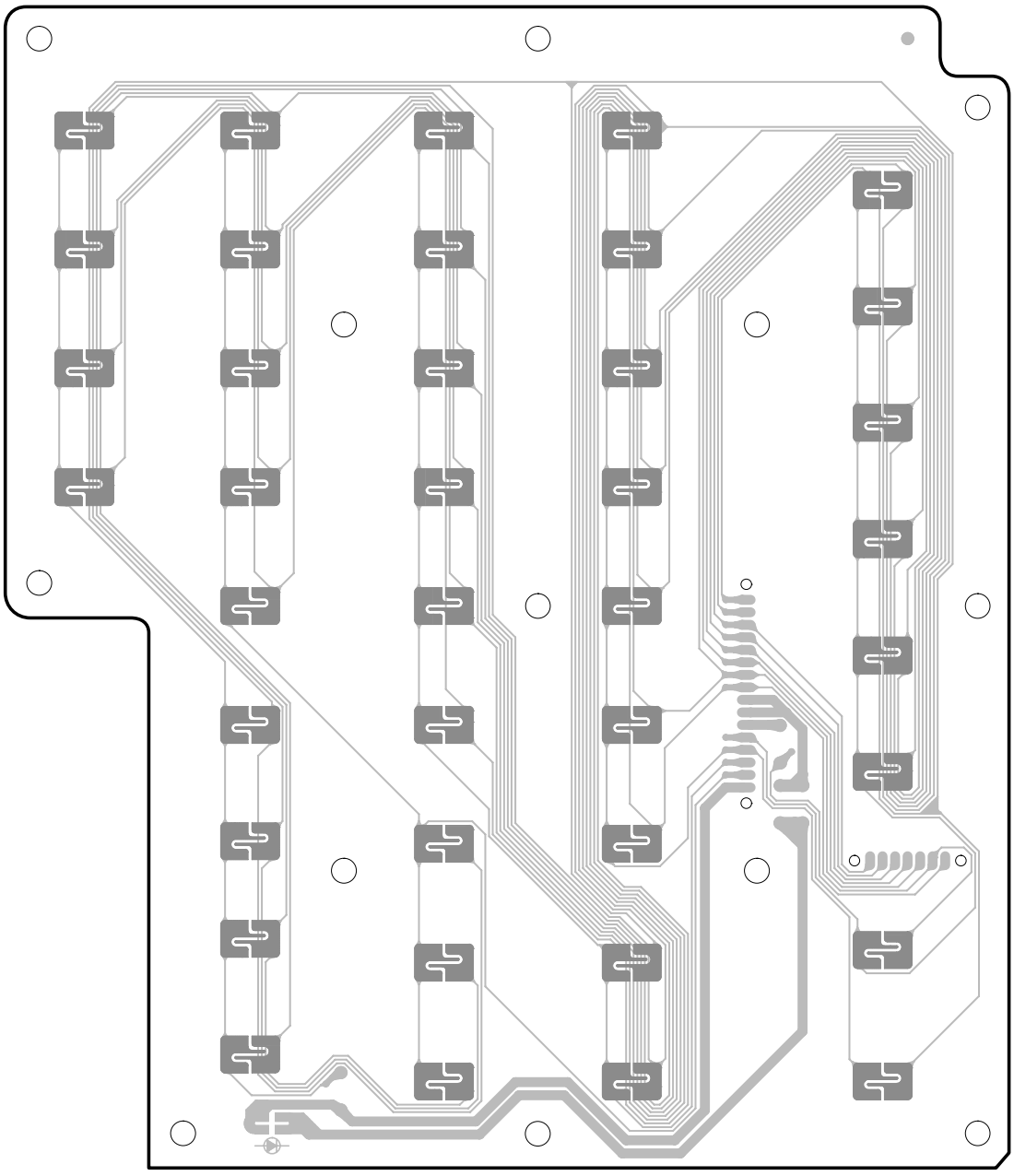

Pattern side

● PNR (PN 3/6) Circuit Board

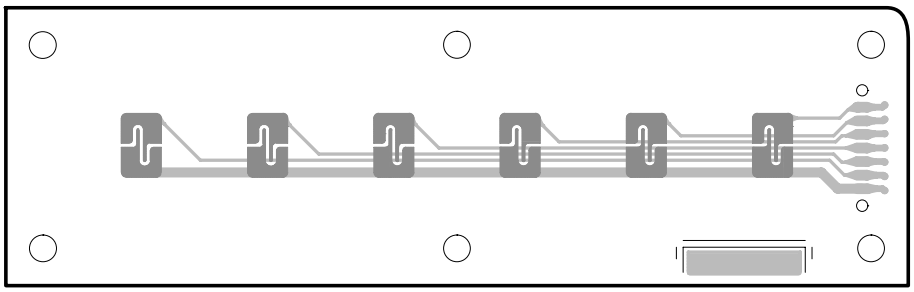

Pattern side

PNR: 2NA-WG23610-1 ⚠2

Downloaded from www.Manualslib.com manuals search engine

● AM (AMJK 1/6) Circuit Board

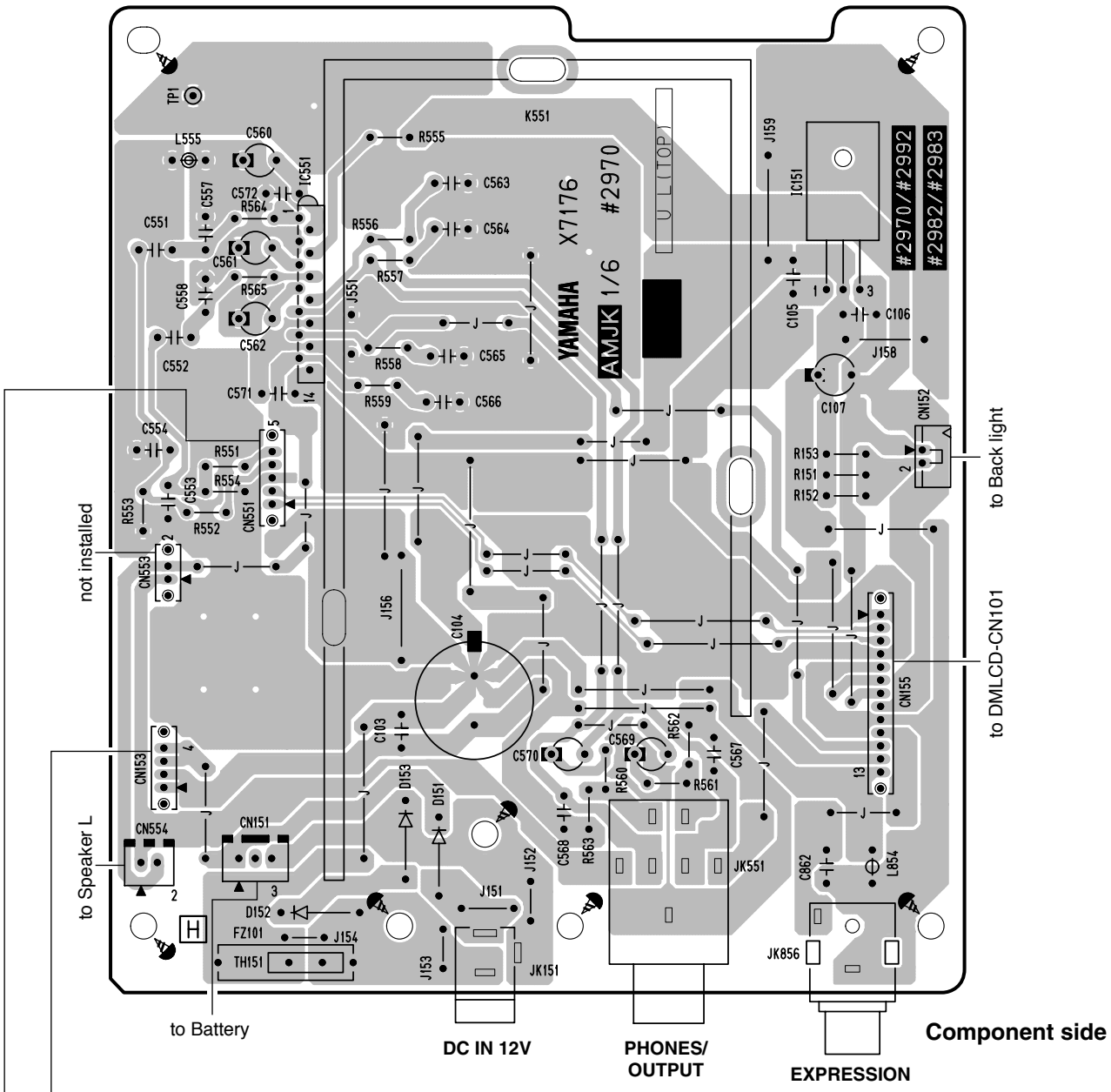

● AM (AMJK 4/6) Circuit Board

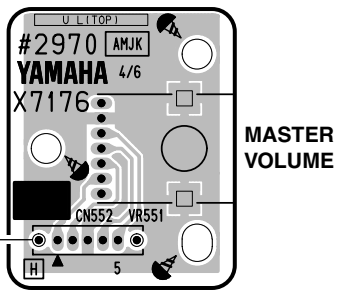

● AM (AMJK 5/6) Circuit Board

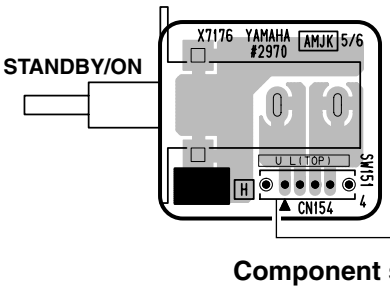

Downloaded from www.Manualslib.com manuals search engine

● 61H Circuit Board

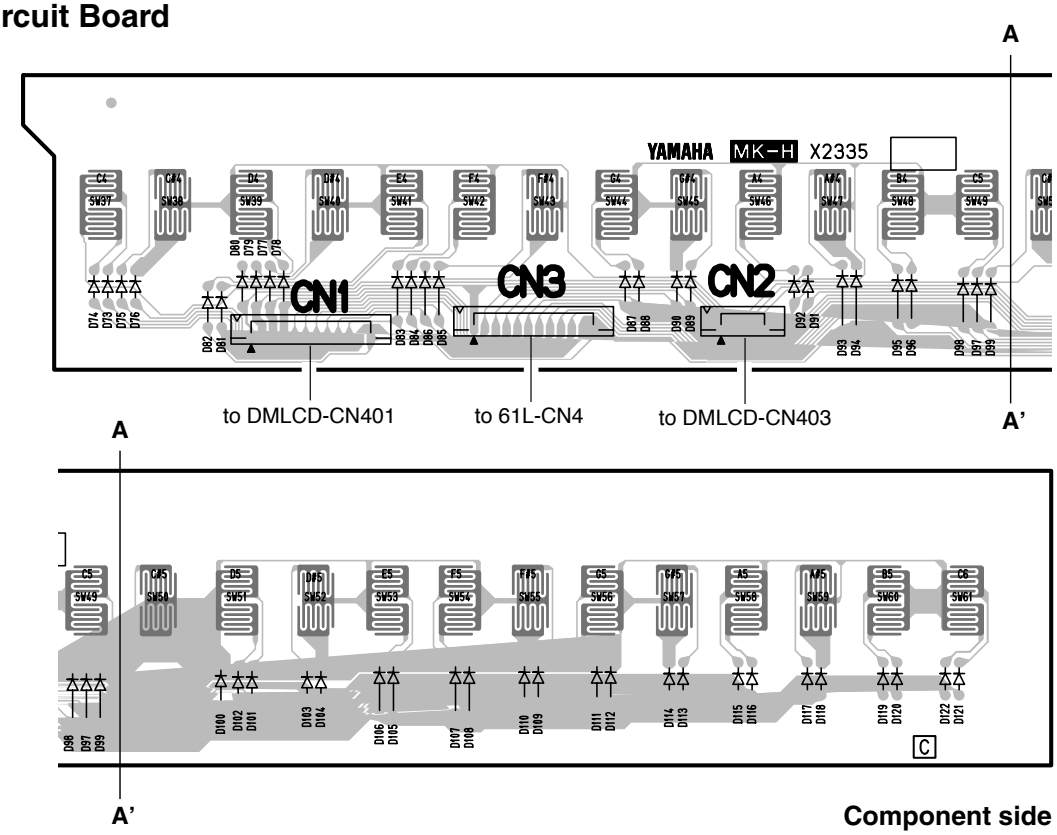

Component side

● 61L Circuit Board

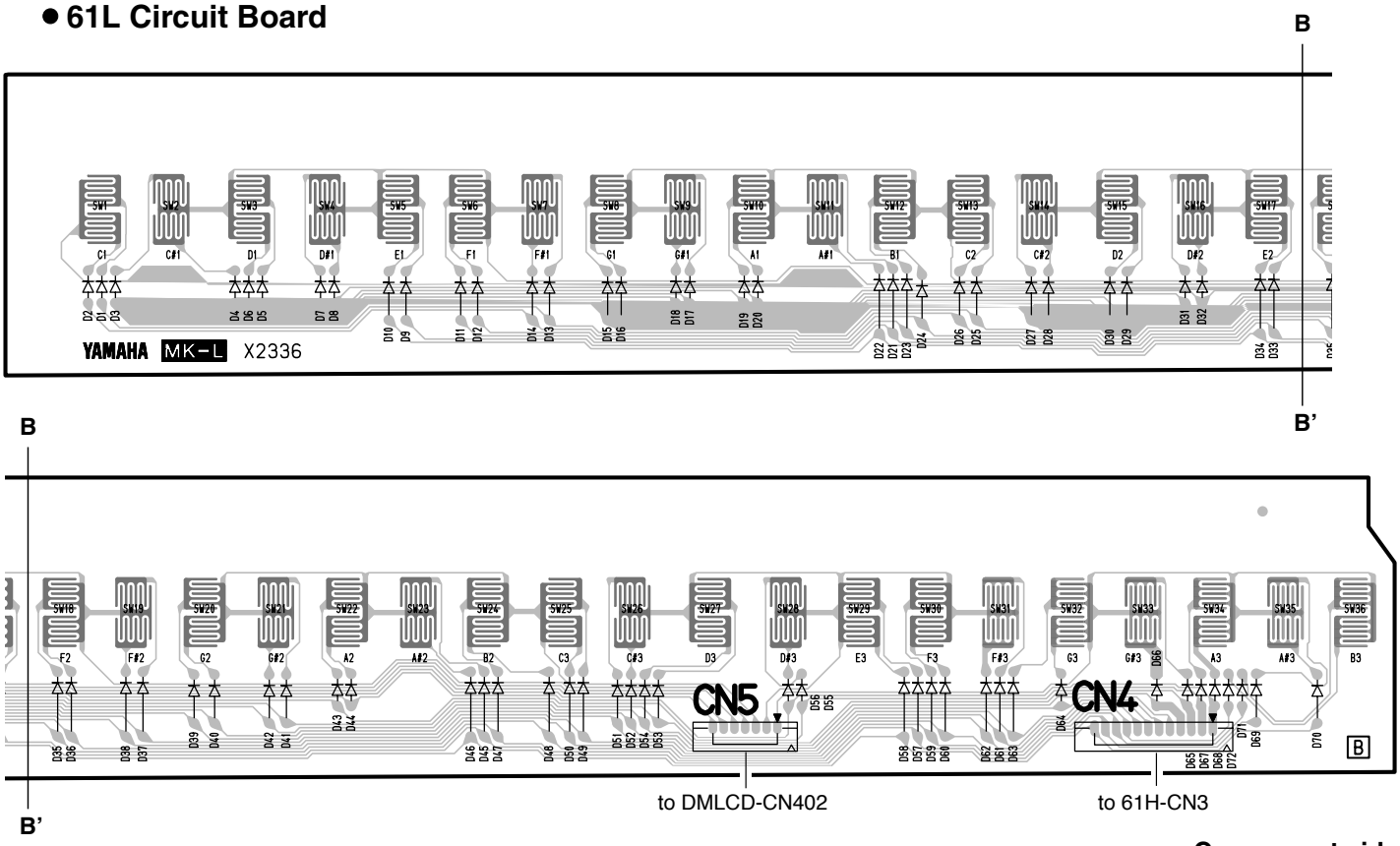

Component side

61H: 2NAKB-V869540
61L: 2NAKB-V869520

Downloaded from www.Manualslib.com manuals search engine

TEST PROGRAM

*** If the test number 47 "Factory Set" is executed, the data already set will be lost.**

1 Preparations

1) Use an AC adaptor PA-5D.
2) Measuring device: Frequency counter, which can detect thousandth value or more, Level meter (with JIS-C filter), Oscilloscope
   Note: Use a stereo plug and connect a load resistor of 33 Ω to the [PHONES/OUTPUT] jack for measurement unless otherwise specified. Input impedance of the measuring device should be 1 MΩ or more.
3) Jig: Foot switch (FC-4 or FC-5), MIDI cable, EXP pedal

2 Starting up the test program

While holding down the keys [C#2], [F2] and [G#2] simultaneously, press the [STANDBY/ON] switch.

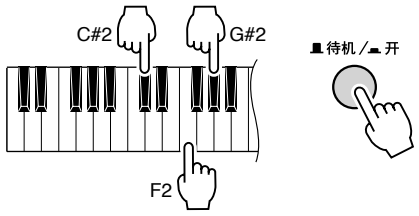

3 Test procedure

1) When the test program is started, "**TEST**" will be displayed on the LCD.
2) Press the [-] or [+] button of the number buttons to select a test program item.
3) Press the [START/STOP] button to execute the test.

If the result is OK or test item is completed, press the [START/STOP] button again to return to the item selection display.
Press the [-] or [+] button of the number buttons to select the next test item.
A cursor ("_") is shown below the first character of the item for which the test results are OK.

If the result is NG, press the lowest key (white key C1) to return to the item selection display.

4 Test program list

(dBu=dBm)

TEST No	LCD display	Test descriptions, judging conditions, etc.
1	**Version** **001**	Displays version of the ROM. "**Prog** ∗∗∗" is displayed on the LCD. ∗∗∗ : Version
2	**Rom Chk1** **002**	Checks the ROM connected to the CPU bus. Make sure that "**Rom OK**" is displayed on the LCD.
3	**Ram Chk1** **003**	Checks the RAM connected to the CPU bus. Make sure that "**Ram OK**" is displayed on the LCD.
6	**FRomChk1** **006**	Checks the FROM connected to the CPU bus. Make sure that "**FRom OK**" is displayed on the LCD.
11	**TG1 Chk** **011**	Plays each key automatically in the order of scale (auto-scaling). (32 notes from C2 to G4 will be played.) Make sure that there is no abnormal sounds or noise. When the auto-scaling is finished, "**TG1 End**" will be shown. Press a key to play a sound. (Single note, the key pressed first will be played)
13	**Pit Chk** **013**	Checks pitch accuracy. Connect the frequency counter to the [PHONES/OUTPUT] jack. (Either L or R) Make sure that the correct signal is output. (440.14 Hz ± 0.22 Hz)
14	**Output R** **014**	Connect the level meter (with JIS-C filter) to the L/R of the [PHONES/OUTPUT] jack. (33 Ω load) Set the [MASTER VOLUME] to the maximum level and check the output level. · PHONES L: -55.0 dBu or less · PHONES R: -4.5 dBu ± 2 dB
15	**Output L** **015**	Connect the level meter (with JIS-C filter) to the L/R of the [PHONES/OUTPUT] jack. (33 Ω load) Set the [MASTER VOLUME] to the maximum level and check the output level. · PHONES L: -4.5 dBu ± 2 dB · PHONES R: -55.0 dBu or less

Downloaded from www.Manualslib.com manuals search engine

TEST No	LCD display	Test descriptions, judging conditions, etc.
20	**SW Chk** **020**	Checks the switches and LEDs on the panel. Press the switches as shown in the LCD. When a switch is pressed, a sound is played at the prescribed pitch. (Refer to the Switch test item list on the next page.) When a switch with LED is turned on, the LED will light up. Make sure that "**SW OK**" is displayed on the LCD when all the switches are pressed as indicated. To cancel the operation halfway, press the lowest key (white key C1) to return to the item selection display.
21	**A. LedChk** **021**	Make sure that all the LEDs on the panel are turned on.
28	**LCD On** **028**	Make sure that all the dots on the LCD are turned on.
29	**LCD Off** **029**	Make sure that all the dots on the LCD are turned off.
34	**PD4 Chk** **034**	Connect a footswitch (FC-4 or FC-5) to the [SUSTAIN] jack. Make sure that C3 is played when the [START/STOP] button is pressed while the pedal is depressed (ON), and that C4 is played when the pedal is released (OFF). The sound will stop when the pedal is depressed again. Make sure that "**PD4 OK**" is displayed on the LCD.
35	**Exp Chk** **035**	Connect the Exp pedal to the [EXPRESSION] jack. Press the [START/STOP] button to start the test and make sure that C3 is played when the pedal is depressed (On), and that C4 is played when the pedal is released (Off). Make sure that "**Exp OK**" is displayed on the LCD.
36	**PB Chk** **036**	C3 is played when the [PITCH BEND] wheel is turned toward you to the minimum position (DW), and C4 is played when the wheel is turned away from you to the maximum position (UP). Make sure that "**PB OK**" is displayed on the LCD.
37	**MIDI Chk** **037**	Connect the [MIDI IN] terminal and [MIDI OUT] terminal with a MIDI cable and then execute the test. Make sure that C4 is played and that "**MIDI OK**" is displayed on the LCD.
41	**Rom Chk2** **041**	Checks the ROM connected to the CPU bus. Make sure that "**Rom OK**" is displayed on the LCD. It will take about 25 seconds for the check.
42	**Ram Chk2** **042**	Checks the RAM connected to the CPU bus. Make sure that "**Ram OK**" is displayed on the LCD.
45	**FRomChk2** **045**	Checks the FROM connected to the CPU bus. Make sure that "**FRom OK**" is displayed on the LCD. It will take about 30 seconds for the check.
47	**Factory** **047**	Initializes the entire backup area to reset to the factory default. "**Fact**" is displayed on the LCD during the test. "**Fact End**" is displayed on the LCD when the test is finished.
48	**TestExit** **048**	This will leave the test program and change to the play mode.

● Other Tests

Popping Noise Check

Connect an oscilloscope to the L/R of the [PHONES/OUTPUT] jack and turn on and then off the [STANDBY/ON] switch. Make sure that popping noise level is 1.0 Vp-p or less, and that no abnormal sound or popping noise is output from the speakers.

Noise Level Check

Connect the level meter (with JIS-C filter) to the L/R of the [PHONES/OUTPUT] jack. (33 Ω load)
Set the [MASTER VOLUME] to the maximum level and check the noise level.
· PHONES L, R: -78 dBu or less

Downloaded from www.Manualslib.com manuals search engine

Switch test item list

Turn	SW Name	LCD Display	Note Number
1	Acmp Vol ▲	A-VOL UP	C2
2	Acmp Vol ▼	A-VOL DW	C#2
3	Tempo ▲	TEMPO UP	D2
4	Tempo ▼	TEMPO DW	D#2
5	Style A/B	Style AB	E2
6	8BEAT	8BEAT	F2
7	BALLAD	BALLAD	F#2
8	ROCK	ROCK	G2
9	DISCO	DISCO	G#2
10	DG WUSHI	DG WUSHI	A2
11	RUMBA	RUMBA	A#2
12	BOSSANVA	BOSSANVA	B2
13	MARCH	MARCH	C3
14	WALTZ	WALTZ	C#3
15	METRO.	METRO.	D3
16	FUNCTION	Function	D#3
17	+/YES	+/YES	E3
18	-/NO	-/NO	F3
19	TOUCH	Touch	F#3
20	REVERB	Reverb	G3
21	SUSTAIN	Sustain	G#3
22	DEMO	Demo	A3
23	VOICE A/B	Voice AB	A#3
24	DUAL	Dual	B3
25	SPLIT	Split	C4
26	ERHU	ERHU	C#4
27	PIPA	PIPA	D4
28	YANGQIN	YANGQIN	D#4
29	DIZI	DIZI	E4
30	SUONA	SUONA	F4
31	ENSEMBLE	ENSEMBLE	F#4
32	PIANO	PIANO	G4
33	HARPSI.	HARPSI.	G#4
34	C.ORGAN	C.ORGAN	A4
35	ACCORD	ACCORD	A#4

Turn	SW Name	LCD Display	Note Number
36	VIBES	VIBES	B4
37	STRINGS1	STRINGS1	C5
38	VIOLIN	VIOLIN	C#5
39	FLUTE	FLUTE	D5
40	CLARINET	CLARINET	D#5
41	OBOE	OBOE	E5
42	TRUMPET	TRUMPET	F5
43	HORN	HORN	F#5
44	BRASS	BRASS	G5
45	HAHP	HAHP	G#5
46	SYN LEAD	SYN LEAD	A5
47	ACO.GTR	ACO.GTR	A#5
48	BASS	BASS	B5
49	SE/XG	SE/XG	C6
50	ACMP	ACMP	C#6
51	SYNCRO STOP	S.Stop	D6
52	SYNCRO START	S.Start	D#6
53	INTRO/ENDING	intro	E6
54	START/STOP	Str/Stp	F6
55	MAIN A	Main A	F#6
56	MAIN B	Main B	G6
57	MEMORY	Memory	G#6
58	BANK	Bank	A6
59	REGIST 1	Regist 1	A#6
60	REGIST 2	Regist 2	B6
61	REGIST 3	Regist 3	C7
62	REGIST 4	Regist 4	C#7
63	SONG NO.	Song No.	D7
64	REC	REC	D#7
65	SONG 1	Song 1	E7
66	SONG 2	Song 2	F7
67	SONG A	Song A	F#7
68	PORTAMENTO	Portamen	G7

Downloaded from www.Manualslib.com manuals search engine

INITIALIZATION

若要初始化所有数据并恢复出厂预设状态，同时按住键盘上最高 （最靠右）的白键和最高的三个黑键并接通电源。显示器上将出现 “FlashCLr”。

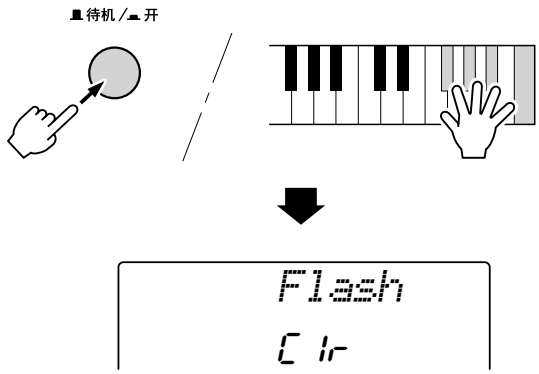

⚠ 小心

- *在执行数据初始化程序时，所有的注册存储和用户乐曲数据，以及上面列出的其它设定都会被擦除，且/或被改变。*
- *如果乐器发生死机，或不管出于什么原因开始出现异常，通过执行数据初始化程序，通常可以使之恢复正常操作。*

Downloaded from www.Manualslib.com manuals search engine

MIDI IMPLEMENTATION CHART

YAMAHA [Digital Keyboard] Date:21-SEP-2007
Model KB-180/SKB-180 MIDI Implementation Chart Version:1.0

Function...	Transmitted	Recognized	Remarks
Basic Default	1 - 16	1 - 16	
Channel Changed	x	x	
Default	3	3	
Mode Messages	x	x	
Altered	**********	x	
Note	0 - 127	0 - 127	
Number : True voice	**********	0 - 127	
Velocity Note ON	o 9nH,v=1-127	o 9nH,v=1-127	
Note OFF	x 9nH,v=0	x	
After Key's	x	x	
Touch Ch's	x	x	
Pitch Bend	o 0 - 24 semi	o 0 - 24 semi	
0,32	o	o	Bank Select
1,11	x *1	o	
5,65,84	o	o	
6,38	o	o	Data Entry
Control 7,10	o	o	
64	o	o	Sustain
Change 71-74	x *1	o	Sound Controller
91,93	o	o	Effect Depth
96-97	x *1	o	RPN Inc,Dec
100-101	o	o	RPN LSB,MSB
Prog	o 0 - 127	o 0 - 127	
Change : True #	**********		
System Exclusive	o	o	
: Song Pos.	x	x	
Common : Song Sel.	x	x	
: Tune	x	x	
System :Clock	o	o	
Real Time:Commands	o	o	
Aux :All Sound OFF	x	o(120,126,127)	
:Reset All Cntrls	x	o(121)	
:Local ON/OFF	x	o(122)	
:All Notes OFF	x	o(123-125)	
Mes- :Active Sense	o	o	
sages:Reset	x	x	

*1 *这些控制转换编号的信息无法从本乐器自身传送。不过，在演奏自动伴奏、乐曲或使用和声效果时，可能会传送这些信息。*

Mode 1 : OMNI ON , POLY Mode 2 : OMNI ON ,MONO o : Yes
Mode 3 : OMNI OFF, POLY Mode 4 : OMNI OFF,MONO x : No

Downloaded from www.Manualslib.com manuals search engine

■ MIDI DATA FORMAT

注：

1 *默认情况下（工厂设置），本乐器通常用作 16 通道多乐器音源发生器，外来的数据不影响面板音色或面板设置。不过，下文列出的 MIDI 信息却会影响到面板音色、自动伴奏及乐曲。*
- *MIDI 主微调*
- *用于改变混响类型、叠奏类型的系统专用信息。*

2 *这些控制转换编号的信息无法从本乐器自身传送。不过，在演奏自动伴奏、乐曲或使用和声效果时，可能会传送这些信息。*

3 *专用*
<GM 系统开启 > F0H、 7EH、 7FH、 09H、 01H、 F7H
- *此信息自动恢复乐器的所有默认设置，只有 MIDI 主微调除外。*

<MIDI 主音量 > F0H、 7FH、 7FH、 04H、 01H、 ll、 mm、 F7H
- *此信息可用于同时改变所有通道的音量（通用系统专用信息）。*
- *“mm”的值用于 MIDI 主音量。（“ll”的值会被忽略）。*

<MIDI 主微调 > F0H、 43H、 1nH、 27H、 30H、 00H、 00H、 mm、 ll、 cc、 F7H
- *此信息同时改变所有通道的微调值。*
- *“mm”和 “ll”的值用于 MIDI 主微调。*
- *“mm”和 “ll”的默认值分别是 08H 和 00H。 “n”和 “cc”可使用任何数值。*

< 混响类型 > F0H、 43H、 1nH、 4CH、 02H、 01H、 00H、 mmH、 llH、 F7H
- *mm : 混响类型 MSB*
- *ll：混响类型 LSB*

如需有关详细信息，请参阅下面的效果对应表。

< 叠奏类型 >F0H、 43H、 1nH、 4CH、 02H、 01H、 20H、 mmH、 llH、 F7H
- *mm : 叠奏类型 MSB*
- *ll：叠奏类型 LSB*

如需有关详细信息，请参阅下面的效果对应表。

4 *伴奏开始时，会传送一则 FAH 信息。伴奏停止时，会传送一则 FCH 信息。时钟设置为外部时， FAH（伴奏开始）和 FCH（伴奏停止）同时都可以识别。*

5 *本机开 / 关*
< 本机开 > Bn、 7A、 7F
< 本机关 > Bn、 7A、 00
“n”的值会被忽略。

■ 效果对应表

* 接收到没有对应效果类型的类型 LSB 值时，会自动设置为同效果类型（最接近指定的值）对应的值。
* 效果类型名称前面括号中的数字会对应到显示器中显示的数字。

● 混响

TYPE MSB	TYPE LSB								
	00	01	02	08	16	17	18	19	20
000	无效果								
001	(01)Hall 1				(02) Hall 2	(03) Hall 3			
002	Room					(04) Room 1		(05) Room 2	
003	Stager				(06) Stage 1	(07) Stage 2			
004	Plate				(08) Plate 1	(09) Plate 2			
005...127	无效果								

● 叠奏

TYPE MSB	TYPE LSB								
	00	01	02	08	16	17	18	19	20
000...063	无效果								
064	Thru								
065	Chorus		(02) Chorus 2						
066	Celeste					(01) Chorus 1			
067	Flanger			(03) Flanger 1		(04) Flanger 2			
068...127	无效果								

Downloaded from www.Manualslib.com manuals search engine

DIGITAL KEYBOARD

KB-180
SKB-180

PARTS LIST

CONTENTS

OVERALL ASSEMBLY 2
KEYBOARD ASSEMBLY 5
LOWER CASE ASSEMBLY 6
ELECTRICAL PARTS 8-13

WARNING

Components having special characteristics are marked ⚠ and must be replaced with parts having specification equal to those originally installed.

- The numbers “QTY” show quantities for each unit.
- The parts with “--” in “PART NO.” are not available as spare parts.
- This mark “ } ” in the REMARKS column means these parts are interchangeable.
- The second letter of the shaded ( ) part number is O, not zero.
- The second letter of the shaded ( ) part number is I, not one.

Downloaded from www.Manualslib.com manuals search engine

OVERALL ASSEMBLY

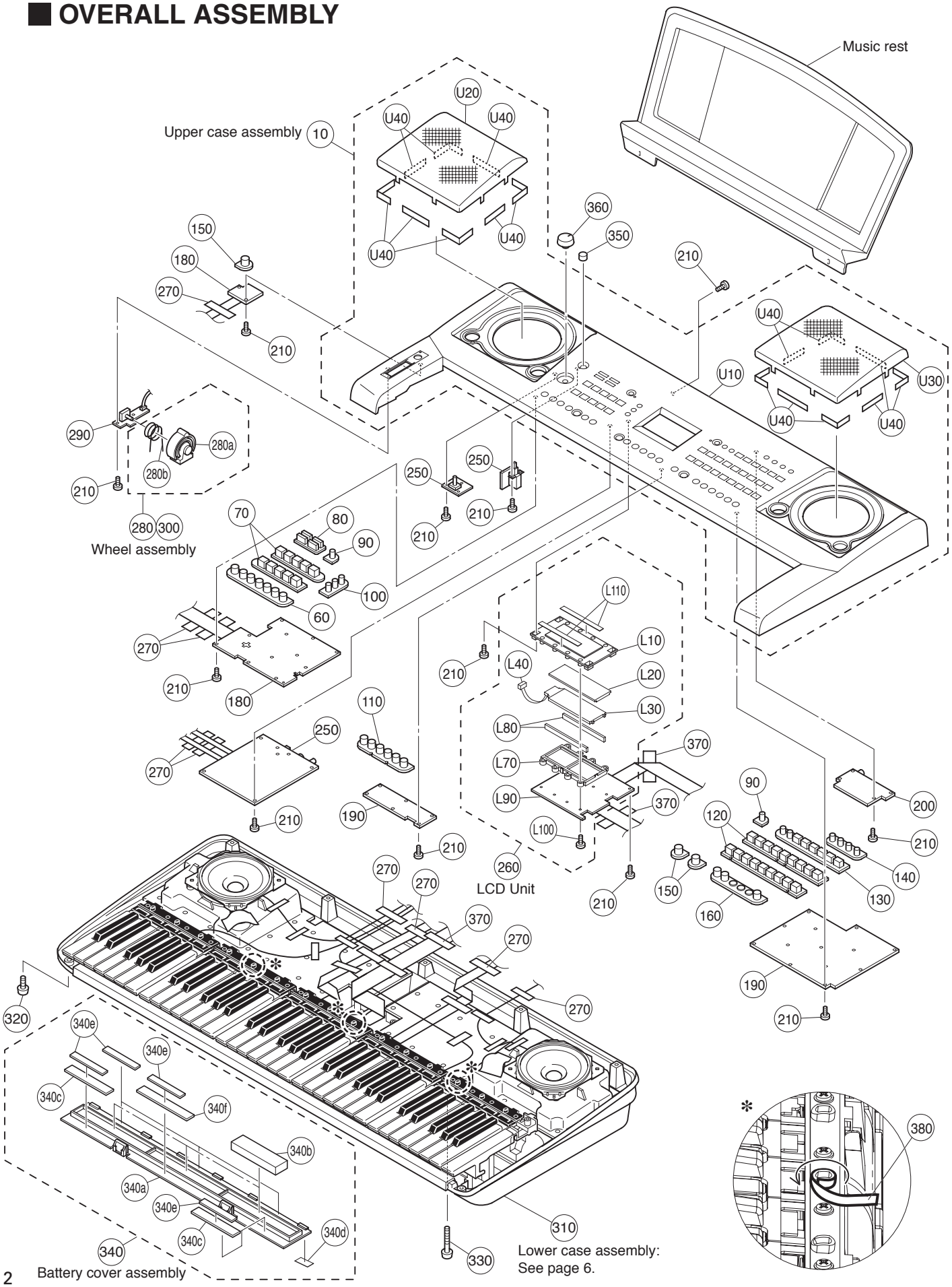

Downloaded from www.Manualslib.com manuals search engine

	REF NO.	PART NO.	DESCRIPTION		部品名	REMARKS	QTY	RANK
			OVERALL ASSEMBLY		総組立	KB-180/SKB-180		
		--	Overall Assembly		総組立	KB-180 (WN08930)		
		--	Overall Assembly		総組立	SKB-180 (WN08940)		
*	10	**WN090200**	Upper Case Assembly		上ケースAss'y	KB-180		
*	10	**WN090300**	Upper Case Assembly		上ケースAss'y	SKB-180		
	60	**WF816000**	Panel Switch 1 Black	X7	PNスイッチ 1	ACMP,SYNCRO STOP,SYNCRO START,INTRO/ENDING,START/STOP,MAIN A,MAIN B		03
	70	**WF816100**	Panel Switch 2 White	X5	PNスイッチ 2	8BEAT,...,DG WUSHI RUMBA,...,METRO.	2	03
	80	**WF816200**	Panel Switch 3 Gray	X4	PNスイッチ 3	ACMP VOL UP,ACMP VOL DOWN TEMPO UP,TEMPO DOWN		02
	90	**WF816300**	Panel Switch 4 Black	X1	PNスイッチ 4	STYLE A/B,VOICE A/B	2	01
	100	**WF816400**	Panel Switch 5 Blue	X3	PNスイッチ 5	FUNCTION,+/YES,-/NO		03
	110	**WF816500**	Panel Switch 6 Black	X6	PNスイッチ 6	MEMORY,BANK,REGIST 1,		03
	120	**WF816600**	Panel Switch 7 White	X9	PNスイッチ 7	REGIST2, REGIST3, REGIST4 PIANO,...,CLARINET OBOE,...,SE/XG	2	03
	130	**WF816700**	Panel Switch 8 Green/Gray	X8	PNスイッチ 8	DUAL,SPLIT,ERHU,PIPA, YANGQIN,DIZI,SUONA,ENSEMB		03
	140	**WF816800**	Panel Switch 9 Gray	X4	PNスイッチ 9	TOUCH,REVERB,SUSTAIN,DEMO		02
	150	**WF816900**	Panel Switch 10 Black	X1	PNスイッチ 10	SONG NO.,REC,PORTAMENTO	3	01
*	160	**WM313900**	Panel Switch 11-2 Black	X6	PNスイッチ11ー2	SONG 1,SONG 2,SONG A		
	180	**WG307500**	Circuit Board	PNL	PNLシート			06
	190	**WG307600**	Circuit Board	PNR	PNRシート			06
*	200	**WM930100**	Circuit Board	MIDI	MIDIシート			
	210	**WE774300**	Bind Head Tapping Screw-B	3.0X8 MFZN2W3	Bタイト十BIND		57	01
*	250	**WM930000**	Circuit Board	AM	AMシート			
	260	--	LCD Unit	08K	液晶ユニットー08K	(WN09880)		
	270	**VA126100**	Adhesive Tape	12X50	粘着テープ	}	8	01
	270	--	Adhesive Tape	MY7# 12X50	PETテープ	} (WB79380)	8	
	280	**VY793100**	Wheel Assembly		ホイールAss'y	PITCH BEND		04
	280a	**VY750800**	Wheel		ホイール			03
	280b	**VT440100**	Spring		ホイールバネ			03
*	290	**WM930200**	Circuit Board	PB	PBシート			
	300	**TX920280**	Grease	G-31KA 50g	グリス	(VE96850)		38
	310	--	Lower Case Assembly		下ケースAss'y	(WG07410)		
	320	**WE987400**	Bind Head Tapping Screw-B	3.0X12 MFZN2W3	Bタイト十BIND		9	01
	330	**WF491000**	Bind Head Tapping Screw-B	3.0X30 MFZN2W3	Bタイト十BIND		3	01
	340	**V9259700**	Battery Cover Assembly	PT	バッテリーカバーAss'y			03
	340a	--	Battery Cover		バッテリーカバー	(V704220)		
	340b	--	Battery Cushion White		バッテリークッション	(V710060)	3	
	340c	--	Cushion	PE	クッション(PE)	(V796870)	2	
	340d	--	Nonwoven Fabric Cloth	15X3X0.5	不織布	(V925980)	6	
	340e	--	Cushion	PE 55X8X1	クッション(PE)	(WA10190)	6	
	340f	--	Cushion	PE 100X12X2	クッション(PE)	(WA21920)		
	350	**VQ218800**	Push Knob		プッシュツマミ	STANDBY/ON		03
	360	**VU432400**	Knob		Vツマミ	MASTER VOLUME		01
	370	**VN195400**	Adhesive Tape	FILAMENT 12X70	粘着テープ	}	3	03
	370	--	Adhesive Tape	MY7# 12X70	PETテープ	} (WB79390)	3	
	380	**WH347400**	Nonwoven Fabric Cloth		不織布		3	
*		**WN090200**	Upper Case Assembly		上ケースAss'y	KB-180		
*		**WN090300**	Upper Case Assembly		上ケースAss'y	SKB-180		
	U10	--	Upper Case		上ケース塗装印刷品	KB-180 (WN09140)		
	U10	--	Upper Case		上ケース塗装印刷品	SKB-180 (WN09150)		
	U20	**WF815600**	Speaker Grille L	LEFT	SPグリルL塗装品			06
	U30	**WF815700**	Speaker Grille R	RIGHT	SPグリルR塗装品			06
	U40	--	Nonwoven Fabric Cloth		不織布SPーGril	(WG25550)	16	
		--	LCD Unit	08K	液晶ユニットー08K	(WN09880)		
	L10	**V5339100**	LCD Panel	TYPE-B	LCDパネル成形品			01
	L20	**WF817100**	LCD	98-43383-B01/982-4	液晶ディスプレイ			06
*	L30	**WB490800**	Back-lit Assembly	PT	バックライトAss'y			
	L40	--	Connector Assembly	BL 2P L=70	BL束線	(WC60260)		
	L70	**V8671300**	LCD Holder		LCDホルダー			01
	L80	**V7838000**	Rubber Connector	ZTT-710	ゴムコネクター		2	03
*	L90	**WN046200**	Circuit Board	DMLCD	DMLCDシート			
	L100	**WE972900**	Bind Head Tapping Screw-P	3.0X12 MFZN2W3	Pタイト十BIND		8	01
	L110	--	Nonwoven Fabric Cloth	5X8	不織布	(V706870)	2	

*: New Parts

RANK: Japan only

Downloaded from www.Manualslib.com manuals search engine

REF NO.	PART NO.	DESCRIPTION		部品名	REMARKS	QTY	RANK
		ACCESSORIES		付属品			
	WG073800	Music Rest		譜面板			
⚠	**WF324900**	AC Adaptor	PA-5D CHN	ＡＣアダプター			08

✻: New Parts

RANK: Japan only

Downloaded from www.Manualslib.com manuals search engine

■ KEYBOARD ASSEMBLY

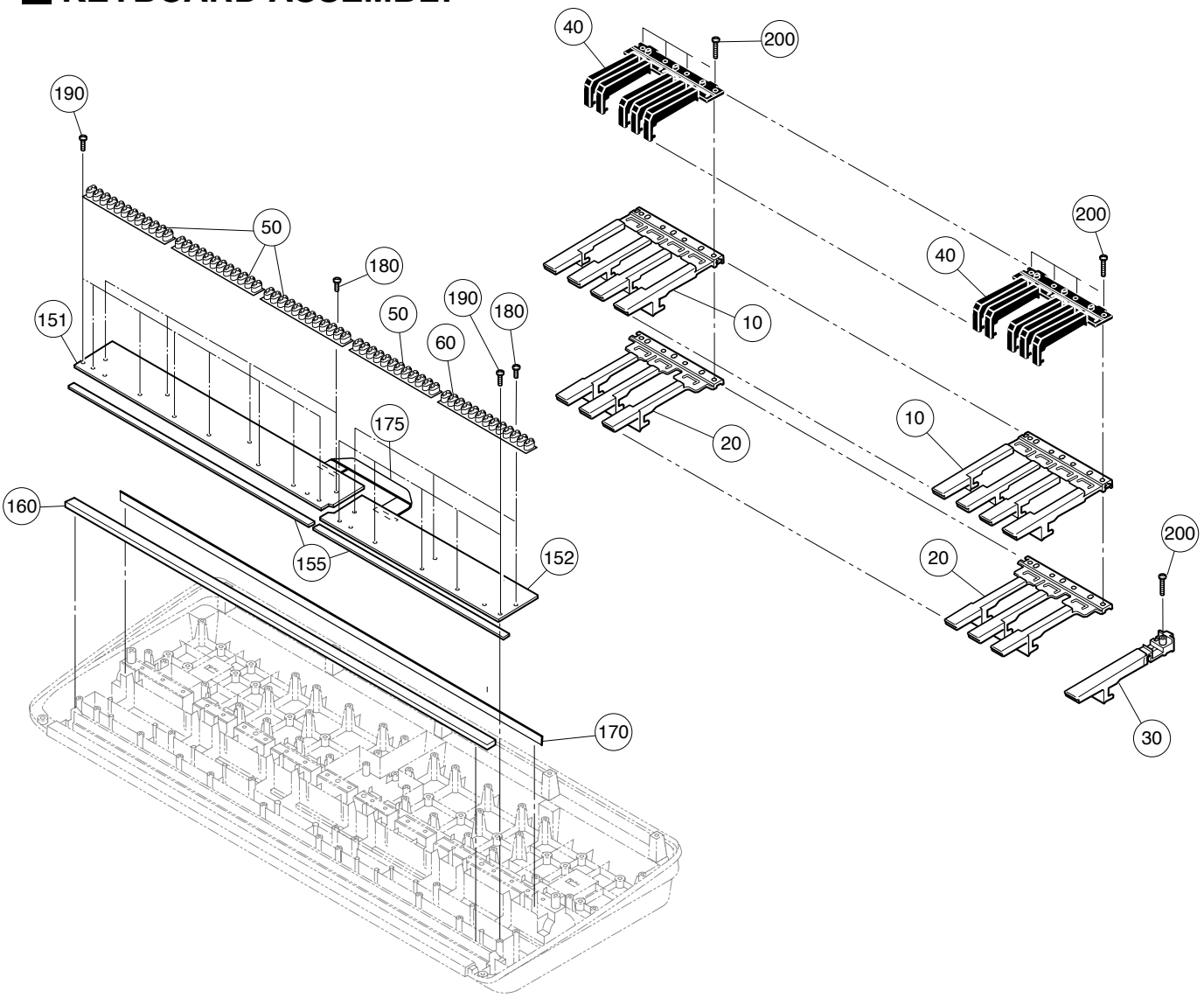

REF NO.	PART NO.	DESCRIPTION		部品名	REMARKS	QTY	RANK
		KEYBOARD ASSEMBLY		16N-C61鍵盤	KB-180/SKB-180		
	V8695700	Keyboard Assembly	16N C61	16N-C61鍵盤			
10	**V3412600**	White Key	16N CEGB	白鍵 C E G B		5	
10	**WB125200**	White Key	16N CEGB	白鍵 C E G B		5	02
20	**V3412700**	White Key	16L DFA	白鍵 D F A		5	
20	**WB125300**	White Key	16L DFA	白鍵 D F A		5	02
30	**V4760300**	White Key	16N C'	白鍵 C	C6		02
40	**VZ271700**	Black Key	16N	黒鍵		5	06
50	**V3413600**	Rubber Contact	16N-2M OCT 2M	接点ゴム16N2M	C1-B1,C2-B2,C3-B3,C4-B4	4	04
60	**V7477400**	Rubber Contact	16N-2M 13K 2M	接点ゴム16N2M	C5-C6		04
151	**V8695300**	Circuit Board	61L	シート61L			04
152	**V8695500**	Circuit Board	61H	シート61H			04
155	**VZ302900**	Felt U White		フェルトU			02
160	**VZ303000**	Felt L White		フェルトL			02
170	**V7100100**	Rubber Support	16N	サポートラバー			03
175	**V8696200**	Connector Assembly	16N-2M-C61 L=210	中継束線			01
180	**WE774300**	Bind Head Tapping Screw-B	3.0X8 MFZN2W3	Bタイト十BIND		7	01
190	**WH899400**	Bind Head Tapping Screw-P	3.0X12 MFZN2W3 SP	Pタイト十BIND		13	01
200	**WF492000**	Bind Head Tapping Screw-P	3.0X20 MFZN2W3	Pタイト十BIND		21	01

※: New Parts

RANK: Japan only

Downloaded from www.Manualslib.com manuals search engine

LOWER CASE ASSEMBLY

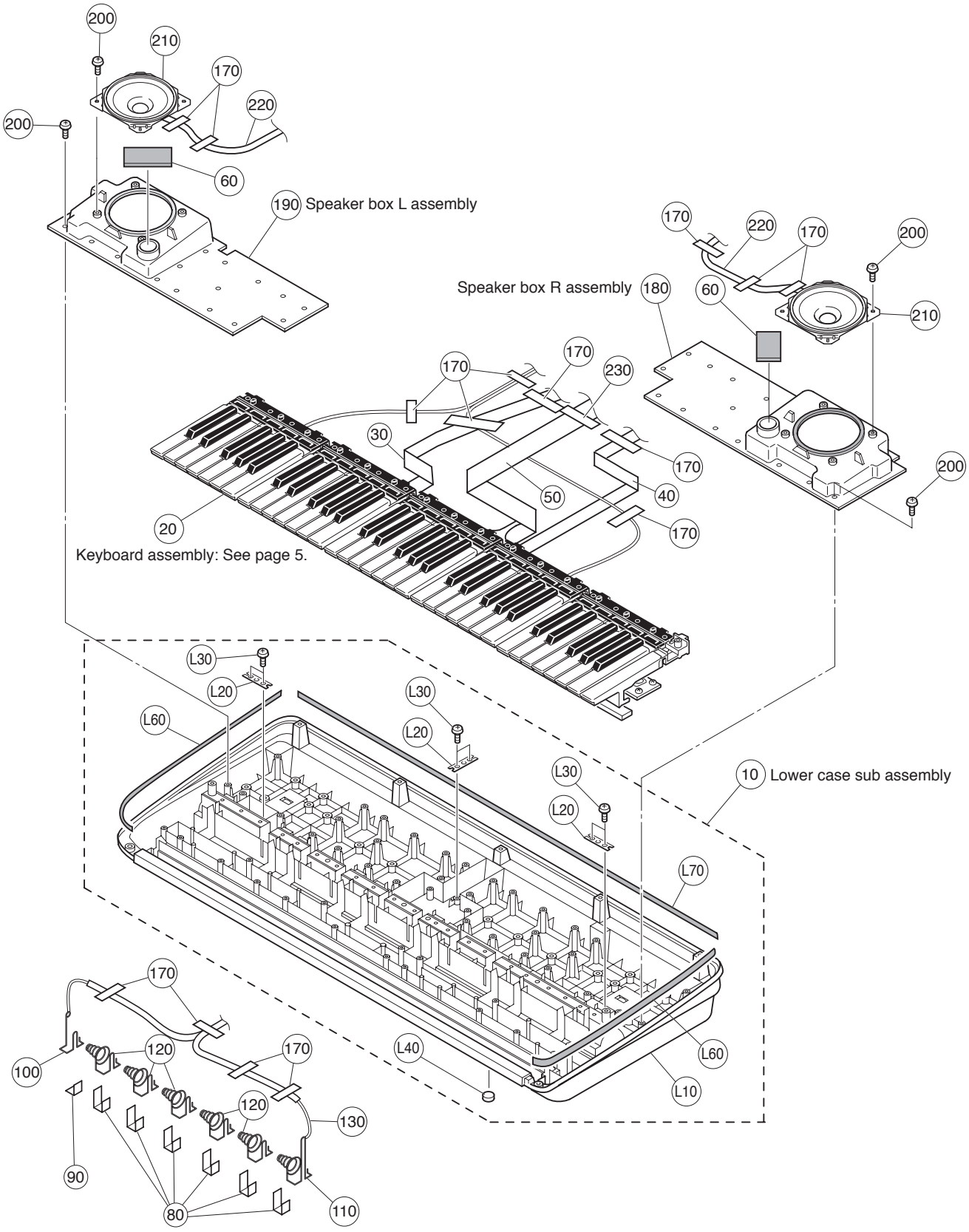

Downloaded from www.Manualslib.com manuals search engine

REF NO.	PART NO.	DESCRIPTION		部品名	REMARKS	QTY	RANK
		LOWER CASE ASSEMBLY		下ケースAss'y	KB-180/SKB180		
	--	Lower Case Assembly		下ケースAss'y	(WG07410)		
10	**WG074000**	Lower Case Sub Assembly		下ケースサブAss'y			10
20	**V8695700**	Keyboard Assembly	16N C61	16NーC61鍵盤			
30	**WC601200**	Connector Assembly	MK3 7P L=550	MK3束線			
40	**WG343000**	Connector Assembly	MK2 5P L=500	MK2束線			
50	**WC601000**	Connector Assembly	MK1 12P L=600	MK1束線			
60	--	Filter	GLAY	フィルター	(WC62030)	2	
80	--	Nonwoven Fabric Cloth	40X13X0.5	不織布	(V771130)	6	
90	--	Nonwoven Fabric Cloth	13X13X0.5	不織布	(V771140)		
100	**V7060500**	Spring Terminal	(+)	接点バネ(十)			01
110	**V7060700**	Spring Terminal	(-)	接点バネ(ー)			01
120	**V7060200**	Spring Terminal	(-/+)	接点バネ		5	01
130	--	Connector Assembly	BAT 2P (RED/BLACK)	BAT束線	(V873560)		
170	**VA126100**	Adhesive Tape	12X50	粘着テープ		11	01
170	--	Adhesive Tape	MY7# 12X50	PETテープ	(WB79380)	11	
180	**V8749500**	Speaker Box R Assembly	RIGHT	SPボックスRAss'y			05
190	**V8749400**	Speaker Box L Assembly	LEFT	SPボックスLAss'y			05
200	**WE974500**	Bind Head Tapping Screw-B	4.0X10 MFZN2W3	Bタイト十BIND		40	01
210	**X5163A00**	Speaker	12.0cm 4ohm 6W	スピーカ		2	06
220	--	Connector Assembly	SPL 2P	SPL束線	(WG32410)	2	
230	**VN195400**	Adhesive Tape	FILAMENT 12X70	粘着テープ			03
230	--	Adhesive Tape	MY7# 12X70	PETテープ	(WB79390)		
	WG074000	Lower Case Sub Assembly		下ケースサブAss'y			10
L10	--	Lower Case		下ケース成形品	(WG07390)		
L20	**VI104400**	Holder		脚取り付け金具天津製		3	
L30	**WE774300**	Bind Head Tapping Screw-B	3.0X8 MFZN2W3	Bタイト十BIND		6	01
L40	**CB043750**	Foot	T1.6	ゴム脚		5	01
L60	--	Cushion	380X15X1.0	クッション(PE)	(V881260)	2	
L70	--	Cushion	885X15X1.0	クッション(PE)	(V642110)		

✻: New Parts

RANK: Japan only

Downloaded from www.Manualslib.com manuals search engine

■ ELECTRICAL PARTS

AM/MIDI/PB

	REF NO.	PART NO.	DESCRIPTION		部品名	REMARKS	QTY	RANK
			ELECTRICAL PARTS		電気部品	KB-180/SKB-180		
*		**WM930000**	Circuit Board	AM (AMJK 1,4,5/6)	AMシート	(WM92990)(X7176H0)		
*		**WM930100**	Circuit Board	MIDI (AMJK 2/6)	MIDIシート	(WM92990)(X7176H0)		
*		**WM930200**	Circuit Board	PB (AMJK 6/6)	PBシート	(WM92990)(X7176H0)		
*		**WN046200**	Circuit Board	DMLCD	DMLCDシート	(WN04610)(X7174D0)		
		WG307500	Circuit Board	PNL (PN 2/6,4/6)	PNLシート	(WG23610)(X7177C0)		06
		WG307600	Circuit Board	PNR (PN 1/6,3/6)	PNRシート	(WG23610)(X7177C0)		06
		V8695500	Circuit Board	61H	シート61H	(V869540)(X2335C0)		04
		V8695300	Circuit Board	61L	シート61L	(V869520)(X2336B0)		04
*		**WM930000**	Circuit Board	AM (AMJK 1,4,5/6)	AMシート	(WM92990)(X7176H0)		
*		**WM930100**	Circuit Board	MIDI (AMJK 2/6)	MIDIシート	(WM92990)(X7176H0)		
*		**WM930200**	Circuit Board	PB (AMJK 6/6)	PBシート	(WM92990)(X7176H0)		
	30	--	Jumper Wire	0.55 TIN	ジャンパー線	(VA07890)		
	50	**WE774300**	Bind Head Tapping Screw-B	3.0X8 MFZN2W3	Bタイト＋BIND		3	01
	C103	**VC694800**	Semiconductive Cera. Cap.	0.1000 25V Z TATET	半導体セラコン			01
	C104	**V3773200**	Electrolytic Cap.	6800.0 25.0V FORM.	ケミコン			
	C104	**UR749680**	Electrolytic Cap.	6800 25.0V FORM.	ケミコン			03
	C105	**VC694800**	Semiconductive Cera. Cap.	0.1000 25V Z TATET	半導体セラコン			01
	C106	**VC694800**	Semiconductive Cera. Cap.	0.1000 25V Z TATET	半導体セラコン			01
	C107	**UR828220**	Electrolytic Cap.	220.00 10.0V RX TP	ケミコン			01
	C107	**V3507400**	Electrolytic Cap.	220.00 10.0V TP	ケミコン			01
	C551	**UA456100**	Mylar Capacitor	1.0000 50V J ST	マイラーコン			03
	C551	**V5516600**	Mylar Capacitor	1.0000 50V J	マイラーコン			
	C551	**VE327200**	Monolithic Mylar Capacitor	1.0 50V J RX TP	積層マイラーコン			02
	C551	**VU838100**	Monolithic Mylar Capacitor	1.0000 50V J TATET	積層マイラーコン			
	C552	**UA456100**	Mylar Capacitor	1.0000 50V J ST	マイラーコン			03
	C552	**V5516600**	Mylar Capacitor	1.0000 50V J	マイラーコン			
	C552	**VE327200**	Monolithic Mylar Capacitor	1.0 50V J RX TP	積層マイラーコン			02
	C552	**VU838100**	Monolithic Mylar Capacitor	1.0000 50V J TATET	積層マイラーコン			
	C553	**FG613100**	Ceramic Capacitor-B	1000P 50V K RX TP	セラコン（B）			01
	C553	**VR026200**	Ceramic Capacitor-2B	1000P 63V K FORM.	セラコン2B 天津製			
	C554	**FG613100**	Ceramic Capacitor-B	1000P 50V K RX TP	セラコン（B）			01
	C554	**VR026200**	Ceramic Capacitor-2B	1000P 63V K FORM.	セラコン2B 天津製			
	C557	**FG612470**	Ceramic Capacitor-B	470P 50V K RX TP	セラコン（B）			01
	C557	**VR025800**	Ceramic Capacitor-2B	470P 63V K FORMING	セラコン2B 天津製			
	C558	**FG612470**	Ceramic Capacitor-B	470P 50V K RX TP	セラコン（B）			01
	C558	**VR025800**	Ceramic Capacitor-2B	470P 63V K FORMING	セラコン2B 天津製			
	C560	**UR838100**	Electrolytic Cap.	100.00 16.0V RX TP	ケミコン			01
	C560	**V3508500**	Electrolytic Cap.	100.00 16.0V TP	ケミコン			
	C561	**UR827330**	Electrolytic Cap.	33.00 10.0V RX TP	ケミコン			01
	C561	**V3508300**	Electrolytic Cap.	33.00 16.0V TP	ケミコン			
	C562	**UR867100**	Electrolytic Cap.	10.00 50.0V RX TP	ケミコン			01
	C562	**V3512300**	Electrolytic Cap.	10.00 50.0V TP	ケミコン			
	C563	**UA654470**	Mylar Capacitor	0.0470 50V J RX TP	マイラーコン			01
	-566	**UA654470**	Mylar Capacitor	0.0470 50V J RX TP	マイラーコン			01
	C563	**V5515000**	Mylar Capacitor	0.0470 50V J	マイラーコン			
	-566	**V5515000**	Mylar Capacitor	0.0470 50V J	マイラーコン			
	C563	**VS884200**	Mylar Capacitor	0.0470 100V K TE	マイラーコン			
	-566	**VS884200**	Mylar Capacitor	0.0470 100V K TE	マイラーコン			
	C569	**UR837470**	Electrolytic Cap.	47.00 16.0V RX TP	ケミコン			01
	C569	**V3508400**	Electrolytic Cap.	47.00 16.0V TP	ケミコン			
	C570	**UR837470**	Electrolytic Cap.	47.00 16.0V RX TP	ケミコン			01
	C570	**V3508400**	Electrolytic Cap.	47.00 16.0V TP	ケミコン			
	C571	**VC694800**	Semiconductive Cera. Cap.	0.1000 25V Z TATET	半導体セラコン			01
	C851	**FG644100**	Ceramic Capacitor-F	0.0100 50V Z RX TP	セラコン（F）			01
	C851	**VQ175700**	Ceramic Capacitor-2F	0.01 63V Z FORMING	セラコン 天津製2			
	C852	**VC694800**	Semiconductive Cera. Cap.	0.1000 25V Z TATET	半導体セラコン			01
	C853	**FG652100**	Ceramic Capacitor-SL	100P 50V J RX TP	セラコン（SL）			01
	C853	**VR025000**	Ceramic Capacitor-2B	100P 63V K FORMING	セラコン2B 天津製			
	C854	**VC694800**	Semiconductive Cera. Cap.	0.1000 25V Z TATET	半導体セラコン			01
	C862	**FG652100**	Ceramic Capacitor-SL	100P 50V J RX TP	セラコン（SL）			01
	C862	**VR025000**	Ceramic Capacitor-2B	100P 63V K FORMING	セラコン2B 天津製			
	CN151	**LB918030**	Base Post Connector	XH 3P TE	ベースツキポスト			01
	CN152	**VK024600**	Wire Trap	52147 2P TE	ワイヤートラップ			01
	CN153	**VI878200**	Cable Holder	51048 4P TE	ケーブルホルダー			01
	CN153	**VY668400**	Cable Holder	51048 4P TE	ケーブルホルダー天津			
	CN154	**VI878200**	Cable Holder	51048 4P TE	ケーブルホルダー			01
	CN154	**VY668400**	Cable Holder	51048 4P TE	ケーブルホルダー天津			
	CN155	**VI879100**	Cable Holder	51048 13P TE	ケーブルホルダー			01

*: New Parts

RANK: Japan only

Downloaded from www.Manualslib.com manuals search engine

AM/MIDI/PB

REF NO.	PART NO.	DESCRIPTION		部品名	REMARKS	QTY	RANK
CN155	**VY669000**	Cable Holder	51048 13P TE	ケーブルホルダー天津			
CN551	**VI878300**	Cable Holder	51048 5P TE	ケーブルホルダー			01
CN551	**VZ341700**	Cable Holder	51048 5P TE	ケーブルホルダー天津			
CN552	**VI878300**	Cable Holder	51048 5P TE	ケーブルホルダー			01
CN552	**VZ341700**	Cable Holder	51048 5P TE	ケーブルホルダー天津			
CN554	**LB918020**	Base Post Connector	XH 2P TE	ベーススツキポスト			01
CN555	**LB918020**	Base Post Connector	XH 2P TE	ベーススツキポスト			01
CN853	**VI878700**	Cable Holder	51048 9P TE	ケーブルホルダー			01
CN853	**VZ341900**	Cable Holder	51048 9P TE	ケーブルホルダー天津			
CN855	**VI878100**	Cable Holder	51048 3P TE	ケーブルホルダー			01
CN855	**VZ341600**	Cable Holder	51048 3P TE	ケーブルホルダー天津			
⚠ D151	**V8603100**	Diode	2A02G-01 X0 JI	ダイオード			
⚠ D151	**VV731400**	Diode	2A02-05 X0	ダイオード			01
D152	**WB880900**	Diode	10EDA40-TA1B2 26	ダイオード			01
D152	**WM881800**	Diode	1A4-E 26	ダイオード			
D153	**WB880900**	Diode	10EDA40-TA1B2 26	ダイオード			01
D153	**WM881800**	Diode	1A4-E 26	ダイオード			
D851	**VB941200**	Diode	1SS133,1SS176 TE	ダイオード			01
IC151	**X6980A00**	IC	BA60BC0T +6V 1.0A	IC	REGULATOR +6V		03
IC551	**XY209A00**	IC	LA4625-E 13.5W	IC	POWER AMP. 6W+6W		05
IC851	**WA645200**	Photo Coupler	PC900V0NSZX	フォトカプラ			04
J151	**--**	Jumper Wire	0.55 TIN	ジャンパー線	(VA07890)		
-153	**--**	Jumper Wire	0.55 TIN	ジャンパー線	(VA07890)		
J156	**--**	Jumper Wire	0.55 TIN	ジャンパー線	(VA07890)		
J158	**--**	Jumper Wire	0.55 TIN	ジャンパー線	(VA07890)		
J551	**--**	Jumper Wire	0.55 TIN	ジャンパー線	(VA07890)		
J852	**--**	Jumper Wire	0.55 TIN	ジャンパー線	(VA07890)		
J853	**--**	Jumper Wire	0.55 TIN	ジャンパー線	(VA07890)		
⚠ JK151	**LB302260**	Connector	HEC0470-01-630	電源コネクタ	DC IN 12V		02
⚠ JK151	**V6557600**	Connector	HTJ-020-05AZ	電源コネクタ			04
JK551	**LB101870**	Phone Jack	JACK YKB21-5006	ホーンコネクタ	PHONES/OUTPUT		03
JK551	**VV943300**	Phone Jack	HTJ064-04A	ホーンコネクタ			02
JK851	**VC687500**	Phone Jack	JACK YKB21-5014	ホーンコネクタ（黒）	SUSTAIN PEDAL		01
JK851	**WE245200**	Phone Jack	JY-6314-01-020	ホーンコネクタ（黒）			
JK852	**VJ107200**	DIN Connector	JACK5P YKF51-5050N	DINコネクタ	MIDI OUT		01
JK852	**VZ085800**	DIN Connector	5P HDC-052S-01	DINコネクタ			01
JK853	**VJ107200**	DIN Connector	JACK5P YKF51-5050N	DINコネクタ	MIDI IN		01
JK853	**VZ085800**	DIN Connector	5P HDC-052S-01	DINコネクタ			01
JK856	**VM467200**	PIN Connector	JACK LCZ3.4-1	ピンコネクタ 天津製	EXPRESSION		
K551	**--**	Heat Sink		放熱板	(WF87700)		
L555	**GE300670**	Ferrite Bead	BL02RN2R1P1A TATET	フェライトビーズ			02
L851	**V7634400**	Coil	BD-FL20-03 20uH	コイル 20UH			
L851	**VB835000**	Coil	FL05RD200AT 20uH	コイル 20U			01
L851	**VT279200**	Coil	DX001-20UH 20uH	コイル 20U 天津			
L854	**V7634400**	Coil	BD-FL20-03 20uH	コイル 20UH			
L854	**VB835000**	Coil	FL05RD200AT 20uH	コイル 20U			01
L854	**VT279200**	Coil	DX001-20UH 20uH	コイル 20U 天津			
R151	**HF455180**	Carbon Resistor	180.0 1/4 J AX TP	カーボン抵抗			01
R151	**V2548300**	Carbon Resistor	180.0 1/6J 26TP	カーボン抵抗			
R152	**HF455150**	Carbon Resistor	150.0 1/4 J AX TP	カーボン抵抗			01
R152	**V2548200**	Carbon Resistor	150.0 1/6J 26TP	カーボン抵抗			01
R551	**HF457100**	Carbon Resistor	10.0K 1/4 J AX TP	カーボン抵抗			01
R551	**V2550400**	Carbon Resistor	10.0K 1/6J 26TP	カーボン抵抗			
R552	**HF457100**	Carbon Resistor	10.0K 1/4 J AX TP	カーボン抵抗			01
R552	**V2550400**	Carbon Resistor	10.0K 1/6J 26TP	カーボン抵抗			
R553	**HF456220**	Carbon Resistor	2.2K 1/4 J AX TP	カーボン抵抗			01
R553	**V2549600**	Carbon Resistor	2.2K 1/6 J 26TP	カーボン抵抗			
R554	**HF456220**	Carbon Resistor	2.2K 1/4 J AX TP	カーボン抵抗			01
R554	**V2549600**	Carbon Resistor	2.2K 1/6 J 26TP	カーボン抵抗			
R555	**HF457100**	Carbon Resistor	10.0K 1/4 J AX TP	カーボン抵抗			01
R555	**V2550400**	Carbon Resistor	10.0K 1/6J 26TP	カーボン抵抗			
R556	**WD556700**	Flame Proof C. Resistor	2.2 1/4 J TE-26	不燃化カーボン抵抗			01
-559	**WD556700**	Flame Proof C. Resistor	2.2 1/4 J TE-26	不燃化カーボン抵抗			01
R560	**HF455100**	Carbon Resistor	100.0 1/4 J AX TP	カーボン抵抗			01
R560	**V2548000**	Carbon Resistor	100.0 1/6J 26TP	カーボン抵抗			
R561	**HF455100**	Carbon Resistor	100.0 1/4 J AX TP	カーボン抵抗			01
R561	**V2548000**	Carbon Resistor	100.0 1/6J 26TP	カーボン抵抗			
R562	**HF455330**	Carbon Resistor	330.0 1/4 J AX TP	カーボン抵抗			01
R562	**V2548600**	Carbon Resistor	330.0 1/6J 26TP	カーボン抵抗			
R563	**HF455330**	Carbon Resistor	330.0 1/4 J AX TP	カーボン抵抗			01

✻: New Parts

RANK: Japan only

Downloaded from www.Manualslib.com manuals search engine

AM/MIDI/PB and DMLCD

REF NO.	PART NO.	DESCRIPTION		部品名	REMARKS	QTY	RANK
R563	**V2548600**	Carbon Resistor	330.0 1/6J 26TP	カーボン抵抗			
R564	**HF456100**	Carbon Resistor	1.0K 1/4 J AX TP	カーボン抵抗			01
R564	**V2549200**	Carbon Resistor	1.0K 1/6 J 26TP	カーボン抵抗			
R565	**HF456100**	Carbon Resistor	1.0K 1/4 J AX TP	カーボン抵抗			01
R565	**V2549200**	Carbon Resistor	1.0K 1/6 J 26TP	カーボン抵抗			
R851	**HF457100**	Carbon Resistor	10.0K 1/4 J AX TP	カーボン抵抗			01
R851	**V2550400**	Carbon Resistor	10.0K 1/6J 26TP	カーボン抵抗			
R852	**HF457150**	Carbon Resistor	15.0K 1/4 J AX TP	カーボン抵抗			01
R852	**V2550600**	Carbon Resistor	15.0K 1/6J 26TP	カーボン抵抗			
R853	**HF456470**	Carbon Resistor	4.7K 1/4 J AX TP	カーボン抵抗			01
R853	**V2550000**	Carbon Resistor	4.7K 1/6 J 26TP	カーボン抵抗			
R854	**HF456100**	Carbon Resistor	1.0K 1/4 J AX TP	カーボン抵抗			01
R854	**V2549200**	Carbon Resistor	1.0K 1/6 J 26TP	カーボン抵抗			
R855	**HF455220**	Carbon Resistor	220.0 1/4 J AX TP	カーボン抵抗			01
R855	**V2548400**	Carbon Resistor	220.0 1/6J 26TP	カーボン抵抗			
R856	**HF454470**	Carbon Resistor	47.0 1/4 J AX TP	カーボン抵抗			01
R856	**V2547600**	Carbon Resistor	47.0 1/6J 26TP	カーボン抵抗			
R857	**HF454470**	Carbon Resistor	47.0 1/4 J AX TP	カーボン抵抗			01
R857	**V2547600**	Carbon Resistor	47.0 1/6J 26TP	カーボン抵抗			
R858	**HF457470**	Carbon Resistor	47.0K 1/4 J AX TP	カーボン抵抗			01
R858	**V2551200**	Carbon Resistor	47.0K 1/6J 26TP	カーボン抵抗			
R859	**HF456100**	Carbon Resistor	1.0K 1/4 J AX TP	カーボン抵抗			01
R859	**V2549200**	Carbon Resistor	1.0K 1/6 J 26TP	カーボン抵抗			
⚠ SW151	**V9661700**	Push Switch	SY16-32-4(U99S2)/T	プッシュSW	STANDBY/ON		03
⚠ SW151	**VY980400**	Push Switch	SDDLB15700 J,UC,CE	プッシュSW			03
⚠ TH151	**V8132800**	Fuse	MF-R185-AP	マルチヒューズ			02
⚠ TH151	**VU847300**	Protector Switch	RUEF185 1.85A 30V	ポリスイッチ			03
TR851	**IC174070**	Transistor	2SC1740S R,S	トランジスタ			01
TR852	**IC174070**	Transistor	2SC1740S R,S	トランジスタ			01
VR551	**WC709800**	Rotary Variable Resistor	A 5.0K XV014111YGP	二連ロータリーVR	MASTER VOLUME		02
VR751	**VZ486300**	Rotary Variable Resistor	B10K EVJ05DF20B14	ロータリーVR	PITCH BEND		03
WH153	--	Connector Assembly	STB2 4P L=230	STB2束線	(WG33270)		
WH155	--	Connector Assembly	AMDM 13P L=120	AMDM束線	(WG33120)		
WH551	--	Connector Assembly	VR3 5P L=230	VR3束線	(WG33260)		
WH853	--	Connector Assembly	JK1 9P L=90	JK1束線	(WG33110)		
WH855	--	Connector Assembly	PB3 3P L=100	PB3束線	(WG33160)		
*	**WN046200**	Circuit Board	DMLCD	DMLCDシート	(WN04610)(X7174D0)		
C101	**US145100**	Ceramic Capacitor-F (chip)	0.1000 25V Z RECT.	チップセラ(F)			01
C102	**US145100**	Ceramic Capacitor-F (chip)	0.1000 25V Z RECT.	チップセラ(F)			01
C103	**UF037100**	Electrolytic Cap. (chip)	10 16V	チップケミコン			01
C104	**UF037100**	Electrolytic Cap. (chip)	10 16V	チップケミコン			01
C105	**US145100**	Ceramic Capacitor-F (chip)	0.1000 25V Z RECT.	チップセラ(F)			01
C106	**US145100**	Ceramic Capacitor-F (chip)	0.1000 25V Z RECT.	チップセラ(F)			01
C107	**UF037100**	Electrolytic Cap. (chip)	10 16V	チップケミコン			01
C108	**US145100**	Ceramic Capacitor-F (chip)	0.1000 25V Z RECT.	チップセラ(F)			01
C109	**US145100**	Ceramic Capacitor-F (chip)	0.1000 25V Z RECT.	チップセラ(F)			01
C110	**UF037100**	Electrolytic Cap. (chip)	10 16V	チップケミコン			01
C111	**US063100**	Ceramic Capacitor-B (chip)	1000P 50V K RECT.	チップセラ(B)			01
C112	**US145100**	Ceramic Capacitor-F (chip)	0.1000 25V Z RECT.	チップセラ(F)			01
-114	**US145100**	Ceramic Capacitor-F (chip)	0.1000 25V Z RECT.	チップセラ(F)			01
C201	**US145100**	Ceramic Capacitor-F (chip)	0.1000 25V Z RECT.	チップセラ(F)			01
-205	**US145100**	Ceramic Capacitor-F (chip)	0.1000 25V Z RECT.	チップセラ(F)			01
C207	**US145100**	Ceramic Capacitor-F (chip)	0.1000 25V Z RECT.	チップセラ(F)			01
-216	**US145100**	Ceramic Capacitor-F (chip)	0.1000 25V Z RECT.	チップセラ(F)			01
C301	**US145100**	Ceramic Capacitor-F (chip)	0.1000 25V Z RECT.	チップセラ(F)			01
-304	**US145100**	Ceramic Capacitor-F (chip)	0.1000 25V Z RECT.	チップセラ(F)			01
C305	**UF028100**	Electrolytic Cap. (chip)	100 10V	チップケミコン			01
C306	**US062220**	Ceramic Capacitor-SL(chip)	220P 50V J RECT.	チップセラ(SL)			01
C307	**US063470**	Ceramic Capacitor-B (chip)	4700P 50V K RECT.	チップセラ(B)			01
C308	**US145100**	Ceramic Capacitor-F (chip)	0.1000 25V Z RECT.	チップセラ(F)			01
C309	**US062100**	Ceramic Capacitor-SL(chip)	100P 50V J RECT.	チップセラ(SL)			01
C310	**US061220**	Ceramic Capacitor-CH(chip)	22P 50V J RECT.	チップセラ(CH)			01
C311	**US061220**	Ceramic Capacitor-CH(chip)	22P 50V J RECT.	チップセラ(CH)			01
C312	**US145100**	Ceramic Capacitor-F (chip)	0.1000 25V Z RECT.	チップセラ(F)			01
-326	**US145100**	Ceramic Capacitor-F (chip)	0.1000 25V Z RECT.	チップセラ(F)			01
C327	**US062100**	Ceramic Capacitor-SL(chip)	100P 50V J RECT.	チップセラ(SL)			01
C328	**US062100**	Ceramic Capacitor-SL(chip)	100P 50V J RECT.	チップセラ(SL)			01
C329	**US145100**	Ceramic Capacitor-F (chip)	0.1000 25V Z RECT.	チップセラ(F)			01
-332	**US145100**	Ceramic Capacitor-F (chip)	0.1000 25V Z RECT.	チップセラ(F)			01

*: New Parts

RANK: Japan only

Downloaded from www.Manualslib.com manuals search engine

DMLCD

REF NO.	PART NO.	DESCRIPTION		部品名	REMARKS	QTY	RANK
C401	**US145100**	Ceramic Capacitor-F (chip)	0.1000 25V Z RECT.	チップセラ（F）			01
C402	**US145100**	Ceramic Capacitor-F (chip)	0.1000 25V Z RECT.	チップセラ（F）			01
C403	**US061470**	Ceramic Capacitor-CH(chip)	47P 50V J RECT.	チップセラ（CH）			01
-416	**US061470**	Ceramic Capacitor-CH(chip)	47P 50V J RECT.	チップセラ（CH）			01
C501	**US145100**	Ceramic Capacitor-F (chip)	0.1000 25V Z RECT.	チップセラ（F）			01
C502	**UF037100**	Electrolytic Cap. (chip)	10 16V	チップケミコン			01
C503	**US145100**	Ceramic Capacitor-F (chip)	0.1000 25V Z RECT.	チップセラ（F）			01
C504	**UF037100**	Electrolytic Cap. (chip)	10 16V	チップケミコン			01
C505	**US145100**	Ceramic Capacitor-F (chip)	0.1000 25V Z RECT.	チップセラ（F）			01
C506	**US145100**	Ceramic Capacitor-F (chip)	0.1000 25V Z RECT.	チップセラ（F）			01
C507	**US063150**	Ceramic Capacitor-B (chip)	1500P 50V K RECT.	チップセラ（B）			01
C508	**US063150**	Ceramic Capacitor-B (chip)	1500P 50V K RECT.	チップセラ（B）			01
C509	**US062560**	Ceramic Capacitor-SL(chip)	560P 50V J RECT.	チップセラ（SL）			01
-512	**US062560**	Ceramic Capacitor-SL(chip)	560P 50V J RECT.	チップセラ（SL）			01
C514	**UF066100**	Electrolytic Cap. (chip)	1 50V	チップケミコン			01
C515	**UF066100**	Electrolytic Cap. (chip)	1 50V	チップケミコン			01
C516	**US062200**	Ceramic Capacitor-SL(chip)	2200P 50V J RECT.	チップセラ（SL）			01
C517	**US062200**	Ceramic Capacitor-SL(chip)	2200P 50V J RECT.	チップセラ（SL）			01
C518	**UF028100**	Electrolytic Cap. (chip)	100 10V	チップケミコン			01
C519	**US145100**	Ceramic Capacitor-F (chip)	0.1000 25V Z RECT.	チップセラ（F）			01
C601	**US145100**	Ceramic Capacitor-F (chip)	0.1000 25V Z RECT.	チップセラ（F）			01
-604	**US145100**	Ceramic Capacitor-F (chip)	0.1000 25V Z RECT.	チップセラ（F）			01
C605	**UF037100**	Electrolytic Cap. (chip)	10 16V	チップケミコン			01
C701	**US062100**	Ceramic Capacitor-SL(chip)	100P 50V J RECT.	チップセラ（SL）			01
-713	**US062100**	Ceramic Capacitor-SL(chip)	100P 50V J RECT.	チップセラ（SL）			01
C715	**US062100**	Ceramic Capacitor-SL(chip)	100P 50V J RECT.	チップセラ（SL）			01
-725	**US062100**	Ceramic Capacitor-SL(chip)	100P 50V J RECT.	チップセラ（SL）			01
C801	**US145100**	Ceramic Capacitor-F (chip)	0.1000 25V Z RECT.	チップセラ（F）			01
C802	**US063100**	Ceramic Capacitor-B (chip)	1000P 50V K RECT.	チップセラ（B）			01
C804	**US145100**	Ceramic Capacitor-F (chip)	0.1000 25V Z RECT.	チップセラ（F）			01
C808	**US145100**	Ceramic Capacitor-F (chip)	0.1000 25V Z RECT.	チップセラ（F）			01
C809	**UF028100**	Electrolytic Cap. (chip)	100 10V	チップケミコン			01
C810	**US145100**	Ceramic Capacitor-F (chip)	0.1000 25V Z RECT.	チップセラ（F）			01
C812	**US062100**	Ceramic Capacitor-SL(chip)	100P 50V J RECT.	チップセラ（SL）			01
C901	**US145100**	Ceramic Capacitor-F (chip)	0.1000 25V Z RECT.	チップセラ（F）			01
-950	**US145100**	Ceramic Capacitor-F (chip)	0.1000 25V Z RECT.	チップセラ（F）			01
CN101	**VK025700**	Wire Trap	52147 13P TE	ワイヤートラップ			01
CN401	**VK025600**	Wire Trap	52147 12P TE	ワイヤートラップ			01
CN402	**VK025100**	Wire Trap	52147 7P TE	ワイヤートラップ			01
CN403	**VK024900**	Wire Trap	52147 5P TE	ワイヤートラップ			01
CN701	**VJ861600**	Wire Trap	52147 16P TE	ワイヤートラップ			01
CN703	**VJ861600**	Wire Trap	52147 16P TE	ワイヤートラップ			01
CN803	**VK025300**	Wire Trap	52147 9P TE	ワイヤートラップ			01
D701	**VT332900**	Diode	1SS355 TE-17 TP	ダイオード			01
IC101	**X6959A00**	IC	RH5RZ50CA-T1-F	IC	REGULATOR +5V		02
IC102	**X5889A00**	IC	BA33BC0FP 3.3V	IC	REGULATOR +3.3V		03
IC103	**X3679A00**	IC	RH5RZ25CA-T1-F	IC	REGULATOR +2.5V		03
* IC202	**X9573100**	IC	MR27V12852L-103TA0	IC	P2 ROM 128M PROG./WAVE		
IC204	**X2726A00**	IC	GLT440L16P-40TC	IC	DRAM 4M		05
IC204	**X6504B00**	IC	M11L416256SA-35TG	IC			
IC206	**X7130A00**	IC	MX29LV400CBTC-70G	IC	FLASH ROM 4M		04
IC207	**X5647A00**	IC	SN74LV32APWR	IC	OR		01
IC301	**X6055A00**	IC	YMW767-VTZ	IC	CPU (SWL01T)		10
IC302	**X4374A00**	IC	S-80136ANMC-JCVT2G	IC	SYSTEM RESET		01
IC302	**X5888A00**	IC	BD45365G	IC			01
IC401	**X7284A00**	IC	SN74LV138APWR	IC	DECODER		01
IC402	**X7284A00**	IC	SN74LV138APWR	IC	DECODER		01
IC501	**X6040A00**	IC	AK4385ET	IC	DAC		03
IC502	**X7300A00**	IC	BA4510F-E2	IC	OP AMP		02
IC601	**X3148A00**	IC	NT3881DFG-01	IC	LCD DRIVER		05
IC601	**XZ987A00**	IC	ML9040A-B01GAZ03A	IC			05
IC801	**X6905A00**	IC	ADC084S021CIMM	IC	ADC		04
L501	**VY657200**	Chip Inductance	600 BK1608HM601-T	チップインダクタ			01
L601	**VY657200**	Chip Inductance	600 BK1608HM601-T	チップインダクタ			01
R203	**RD357470**	Carbon Resistor (chip)	47.0K 63M J RECT.	チップ抵抗			01
R204	**RD357470**	Carbon Resistor (chip)	47.0K 63M J RECT.	チップ抵抗			01
R215	**RD357470**	Carbon Resistor (chip)	47.0K 63M J RECT.	チップ抵抗			01
-220	**RD357470**	Carbon Resistor (chip)	47.0K 63M J RECT.	チップ抵抗			01
R301	**RD356100**	Carbon Resistor (chip)	1.0K 63M J RECT.	チップ抵抗			01
R304	**RD359100**	Carbon Resistor (chip)	1.0M 63M J RECT.	チップ抵抗			01

*: New Parts

RANK: Japan only

Downloaded from www.Manualslib.com manuals search engine

DMLCD and PNL/PNR

REF NO.	PART NO.	DESCRIPTION		部品名	REMARKS	QTY	RANK
R305	**RD355470**	Carbon Resistor (chip)	470.0 63M J RECT.	チップ抵抗			01
R306	**RD357100**	Carbon Resistor (chip)	10.0K 63M J RECT.	チップ抵抗			01
R307	**RD357470**	Carbon Resistor (chip)	47.0K 63M J RECT.	チップ抵抗			01
R308	**RD358100**	Carbon Resistor (chip)	100.0K 63M J RECT.	チップ抵抗			01
R309	**RD358100**	Carbon Resistor (chip)	100.0K 63M J RECT.	チップ抵抗			01
R310	**RD357470**	Carbon Resistor (chip)	47.0K 63M J RECT.	チップ抵抗			01
R311	**RD357470**	Carbon Resistor (chip)	47.0K 63M J RECT.	チップ抵抗			01
R312	**RD354470**	Carbon Resistor (chip)	47.0 63M J RECT.	チップ抵抗			01
R313	**RD355100**	Carbon Resistor (chip)	100.0 63M J RECT.	チップ抵抗			01
R314	**RD355100**	Carbon Resistor (chip)	100.0 63M J RECT.	チップ抵抗			01
R315	**RD354470**	Carbon Resistor (chip)	47.0 63M J RECT.	チップ抵抗			01
R316	**RD354470**	Carbon Resistor (chip)	47.0 63M J RECT.	チップ抵抗			01
R401	**RD355100**	Carbon Resistor (chip)	100.0 63M J RECT.	チップ抵抗			01
R402	**RD355100**	Carbon Resistor (chip)	100.0 63M J RECT.	チップ抵抗			01
R501	**RD350000**	Carbon Resistor (chip)	0 63M J RECT.	チップ抵抗			01
R503	**RD356470**	Carbon Resistor (chip)	4.7K 63M J RECT.	チップ抵抗			01
-514	**RD356470**	Carbon Resistor (chip)	4.7K 63M J RECT.	チップ抵抗			01
R515	**RD355100**	Carbon Resistor (chip)	100.0 63M J RECT.	チップ抵抗			01
R516	**RD355100**	Carbon Resistor (chip)	100.0 63M J RECT.	チップ抵抗			01
R517	**RD356100**	Carbon Resistor (chip)	1.0K 63M J RECT.	チップ抵抗			01
R518	**RD356100**	Carbon Resistor (chip)	1.0K 63M J RECT.	チップ抵抗			01
R601	**RD356150**	Carbon Resistor (chip)	1.5K 63M J RECT.	チップ抵抗			01
R602	**RD355220**	Carbon Resistor (chip)	220.0 63M J RECT.	チップ抵抗			01
R603	**RD354680**	Carbon Resistor (chip)	68.0 63M J RECT.	チップ抵抗			01
R604	**RF457910**	Carbon Resistor (chip)	91.0K D RECT.	チップ抵抗			
R605	**RD356220**	Carbon Resistor (chip)	2.2K 63M J RECT.	チップ抵抗			01
-609	**RD356220**	Carbon Resistor (chip)	2.2K 63M J RECT.	チップ抵抗			01
R610	**RD357100**	Carbon Resistor (chip)	10.0K 63M J RECT.	チップ抵抗			01
R701	**RD356100**	Carbon Resistor (chip)	1.0K 63M J RECT.	チップ抵抗			01
-704	**RD356100**	Carbon Resistor (chip)	1.0K 63M J RECT.	チップ抵抗			01
R705	**RD357330**	Carbon Resistor (chip)	33.0K 63M J RECT.	チップ抵抗			01
-712	**RD357330**	Carbon Resistor (chip)	33.0K 63M J RECT.	チップ抵抗			01
R713	**RD356100**	Carbon Resistor (chip)	1.0K 63M J RECT.	チップ抵抗			01
-720	**RD356100**	Carbon Resistor (chip)	1.0K 63M J RECT.	チップ抵抗			01
R723	**RD357470**	Carbon Resistor (chip)	47.0K 63M J RECT.	チップ抵抗			01
R724	**RD357470**	Carbon Resistor (chip)	47.0K 63M J RECT.	チップ抵抗			01
R725	**RD350000**	Carbon Resistor (chip)	0 63M J RECT.	チップ抵抗			01
R727	**RD350000**	Carbon Resistor (chip)	0 63M J RECT.	チップ抵抗			01
-732	**RD350000**	Carbon Resistor (chip)	0 63M J RECT.	チップ抵抗			01
R746	**RD355100**	Carbon Resistor (chip)	100.0 63M J RECT.	チップ抵抗			01
R747	**RD357470**	Carbon Resistor (chip)	47.0K 63M J RECT.	チップ抵抗			01
-754	**RD357470**	Carbon Resistor (chip)	47.0K 63M J RECT.	チップ抵抗			01
R757	**RD350000**	Carbon Resistor (chip)	0 63M J RECT.	チップ抵抗			01
R758	**RD350000**	Carbon Resistor (chip)	0 63M J RECT.	チップ抵抗			01
R801	**RD357470**	Carbon Resistor (chip)	47.0K 63M J RECT.	チップ抵抗			01
R802	**RD350000**	Carbon Resistor (chip)	0 63M J RECT.	チップ抵抗			01
R803	**RD350000**	Carbon Resistor (chip)	0 63M J RECT.	チップ抵抗			01
R804	**RD355100**	Carbon Resistor (chip)	100.0 63M J RECT.	チップ抵抗			01
R805	**RD356220**	Carbon Resistor (chip)	2.2K 63M J RECT.	チップ抵抗			01
R814	**RD356100**	Carbon Resistor (chip)	1.0K 63M J RECT.	チップ抵抗			01
R815	**RD357470**	Carbon Resistor (chip)	47.0K 63M J RECT.	チップ抵抗			01
R836	**RD357100**	Carbon Resistor (chip)	10.0K 63M J RECT.	チップ抵抗			01
RA401	**WG891500**	Chip Resistor Array	1608X4 100 J	チップ抵抗アレイ			
-403	**WG891500**	Chip Resistor Array	1608X4 100 J	チップ抵抗アレイ			
RA404	**WG893900**	Chip Resistor Array	1608X4 1.0K J	チップ抵抗アレイ			
-406	**WG893900**	Chip Resistor Array	1608X4 1.0K J	チップ抵抗アレイ			
RA407	**WG896300**	Chip Resistor Array	1608X4 10K J	チップ抵抗アレイ			
-409	**WG896300**	Chip Resistor Array	1608X4 10K J	チップ抵抗アレイ			
TH601	**V9140600**	Thermistor (chip)	ERTJ1VT152J 1.5K	チップサーミスタ			
TR701	**WB123200**	Transistor Array	IMB10A T110	トランジスタアレイ			05
-704	**WB123200**	Transistor Array	IMB10A T110	トランジスタアレイ			05
TR705	**VY677600**	Digital Transistor	DTC123JKA TP	デジタルトランジスタ			01
X301	**WE194400**	Quartz Crystal Unit	16.9344M HC-49S-SM	水晶振動子			01
	WG307500	Circuit Board	PNL (PN 2/6,4/6)	PNLシート	(WG23610)(X7177C0)		06
	WG307600	Circuit Board	PNR (PN 1/6,3/6)	PNRシート	(WG23610)(X7177C0)		06
CN771	**VI879400**	Cable Holder	51048 16P TE	ケーブルホルダー	}		01
CN771	**VY669100**	Cable Holder	51048 16P TE	ケーブルホルダー天津	}		
CN772	**VI878500**	Cable Holder	51048 7P TE	ケーブルホルダー			01
CN773	**VI878500**	Cable Holder	51048 7P TE	ケーブルホルダー			01

✻: New Parts

RANK: Japan only

Downloaded from www.Manualslib.com manuals search engine

PNL/PNR and 61H and 61L

REF NO.	PART NO.	DESCRIPTION		部品名	REMARKS	QTY	RANK
CN774	**VI879400**	Cable Holder	51048 16P TE	ケーブルホルダー			01
CN774	**VY669100**	Cable Holder	51048 16P TE	ケーブルホルダー天津			
CN775	**VI878400**	Cable Holder	51048 6P TE	ケーブルホルダー			01
CN775	**VY668500**	Cable Holder	51048 6P TE	ケーブルホルダー天津			01
CN776	**VI878400**	Cable Holder	51048 6P TE	ケーブルホルダー			01
CN776	**VY668500**	Cable Holder	51048 6P TE	ケーブルホルダー天津			01
CN777	**VK024700**	Wire Trap	52147 3P TE	ワイヤートラップ			01
D771	**VB941200**	Diode	1SS133,1SS176 TE	ダイオード			01
-775	**VB941200**	Diode	1SS133,1SS176 TE	ダイオード			01
D771	**VV437800**	Diode	1N4148(DO-34)	ダイオード			01
-775	**VV437800**	Diode	1N4148(DO-34)	ダイオード			01
LD751	**V8952300**	LED	TL-20346D-R-F-13.5	高輝度LED中国製	VOICE B		
LD752	**V8952300**	LED	TL-20346D-R-F-13.5	高輝度LED中国製	STYLE B		
LD753	**V8952300**	LED	TL-20346D-R-F-13.5	高輝度LED中国製	PORTAMENTO		
R751	**HF454680**	Carbon Resistor	68.0 1/4 J AX TP	カーボン抵抗			01
R751	**V2547800**	Carbon Resistor	68.0 1/6J 26TP	カーボン抵抗			
R753	**HF454680**	Carbon Resistor	68.0 1/4 J AX TP	カーボン抵抗			01
R753	**V2547800**	Carbon Resistor	68.0 1/6J 26TP	カーボン抵抗			
R755	**HF454680**	Carbon Resistor	68.0 1/4 J AX TP	カーボン抵抗			01
R755	**V2547800**	Carbon Resistor	68.0 1/6J 26TP	カーボン抵抗			
WH771	**--**	Connector Assembly	PN5 16P L=170	PN5束線	(WG33210)		
WH772	**--**	Connector Assembly	PN7 7P L=170	PN7束線	(WG33230)		
WH774	**--**	Connector Assembly	PN6 16P L=200	PN6束線	(WG33220)		
WH775	**--**	Connector Assembly	PN8 6P L=320	PN8束線	(WG33240)		
	V8695500	Circuit Board	61H	シート61H	(V869540)(X2335C0)		04
	V8695400	Circuit Board	61H	シート集成61H			06
10	**VQ769500**	Masking Tape	W=15	マスキングテープ			
CN01	**VK025600**	Wire Trap	52147 12P TE	ワイヤートラップ			01
CN02	**VK024900**	Wire Trap	52147 5P TE	ワイヤートラップ			01
CN03	**VK025600**	Wire Trap	52147 12P TE	ワイヤートラップ			01
D073	**VB941200**	Diode	1SS133,1SS176 TE	ダイオード			01
-122	**VB941200**	Diode	1SS133,1SS176 TE	ダイオード			01
	V8695300	Circuit Board	61L	シート61L	(V869520)(X2336B0)		04
	V8695200	Circuit Board	61L	シート集成61L			07
10	**VQ769500**	Masking Tape	W=15	マスキングテープ			
CN04	**VK025600**	Wire Trap	52147 12P TE	ワイヤートラップ			01
CN05	**VK025100**	Wire Trap	52147 7P TE	ワイヤートラップ			01
D001	**VB941200**	Diode	1SS133,1SS176 TE	ダイオード			01
-072	**VB941200**	Diode	1SS133,1SS176 TE	ダイオード			01
	X5163A00	Speaker	12.0cm 4ohm 6W	スピーカ		2	06
	WF817100	LCD	98-43383-B01/982-4	液晶ディスプレイ			06

✻: New Parts

RANK: Japan only

Downloaded from www.Manualslib.com manuals search engine

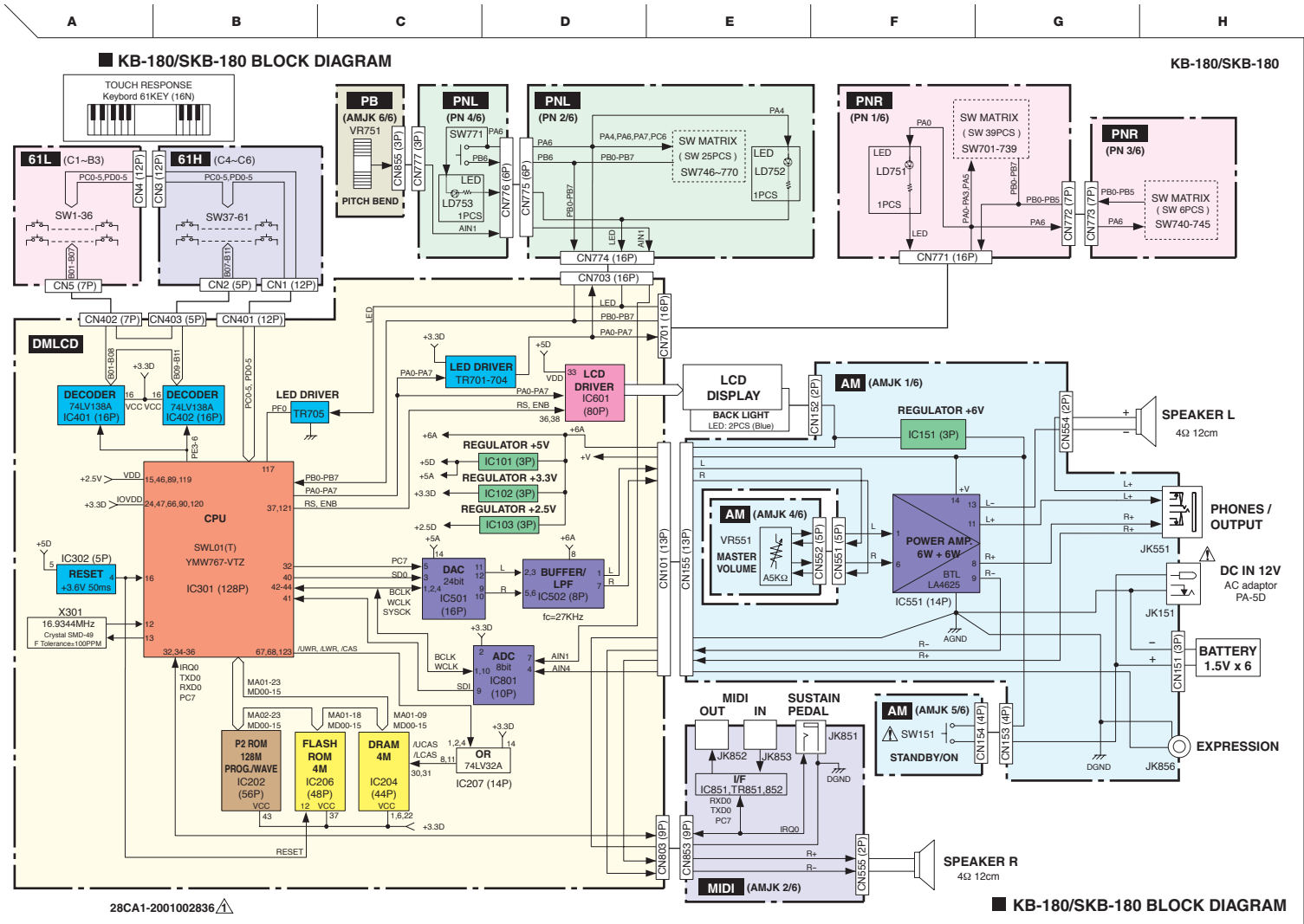

Downloaded from www.Manualslib.com manuals search engine

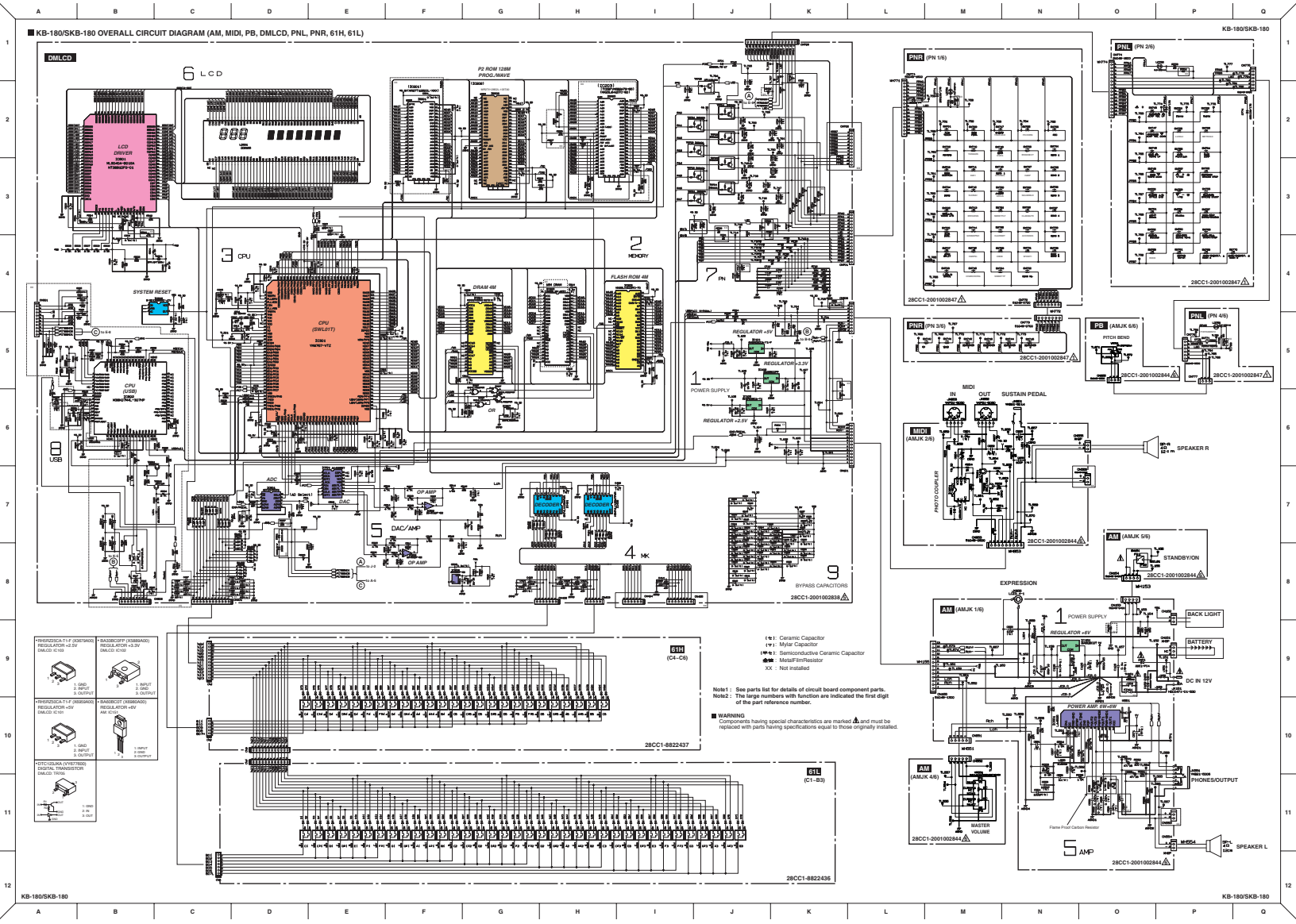

Downloaded from www.Manualslib.com manuals search engine