# EMX860ST
POWERED MIXER

# SERVICE MANUAL

本资料由OKXIA视听皮带资源库www.okxia.cn提供



## CONTENTS


SPECIFICATIONS ..... 3/4
PANEL LAYOUT ..... 5
CIRCUIT BOARD LAYOUT ..... 7
BLOCK DIAGRAM ..... 8
DISASSEMBLY PROCEDURE ..... 9
LSI PIN DESCRIPTION ..... 11
IC BLOCK DIAGRAM ..... 11
CIRCUIT BOARDS ..... 12
INSPECTION ..... 15
MIDI INPLEMENTATION CHART ..... 25
PARTS LIST



PA 011457
19990220-99800

YAMAHA
HAMAMATSU, JAPAN
1.96K-296 D&I Printed in Japan '99.03


Downloaded from www.Manualslib.com manuals search engine

## IMPOR TANT NOTICE

This manual has been provided for the use of authorized Yamaha Retailers and their service personnel. It has been assumed that basic service procedures inherent to the industry, and more specifically Yamaha Products, are already known and understood by the users, and have therefore not been restated.

**WARNING :** Failure to follow appropriate service and safety procedures when servicing this product may result in personal injury, destruction of expensive components and failure of the product to perform as specified. For these reasons, we advise all Yamaha product owners that all service required should be performed by an authorized Yamaha Retailer or the appointed service representative.

**IMPORTANT :** This presentation or sale of this manual to any individual or firm does not constitute authorization certification, recognition of any applicable technical capabilities, or establish a principal-agent relationship of any form.

The data provided is belived to be accurate and applicable to the unit(s) indicated on the cover. The research engineering, and service departments of Yamaha are continually striving to improve Yamaha products. Modifications are, therefore, inevitable and changes in specification are subject to change without notice or obligation to retrofit. Should any discrepancy appear to exist, please contact the distributor's Service Division.

**WARNING :** Static discharges can destroy expensive components. Discharge any static electricity your body may have accumulated by grounding yourself to the ground buss in the unit (heavy gauge black wires connect to this buss.)

**IMPORTANT :** Turn the unit OFF during disassembly and parts replacement. Recheck all work before you apply power to the unit.

## LITHIUM BA TTER Y HANDLING

This product uses a lithium battery for memory back-up.

**WARNING :** Lithium batteries are dangerous because they can be exploded by improper handling. Observe the following precautions when handling or replacing lithium batteries.

- Leave lithium battery replacement to qualified service personnel.
- Always replace with batteries of the same type.
- When installing on the PC board by soldering, solder using the connection terminals provided on the battery cells.
- Never solder directly to the cells. Perform the soldering as quickly as possible.
- Never reverse the battery polarities when installing.
- Do not short the batteries.
- Do not attempt to recharge these batteries.
- Do not disasemble the batteries.
- Never heat batteries or throw them into fire.

**ADVARSEL!**
Lithiumbatteri-Eksplosionsfare ved fejlagtig handtering. Udskiftning ma kun ske med batteri af samme fabrikat og type. lever det brugte batteri tilbage til leverandren.

**VARNING**
Explosionsfara vid felaktigt batteribyte.
Anvand samma batterityp eller en ekvivalent typ som rekommenderas av apparattillverkaren.
Kassera anvant batteri enligt fabrikantens instruktion.

**VAROITUS**
Paristo voi rajahtaa, jos se on virheellisesti asennettu.
Vaihda paristo ainoastaan laitevalmistajan suosittelemaan tyyppiiin.
Havita kaytetty paristo valmistajan ohjeiden mukaisesti.

The following information complies with Dutch official Gazette 1995. 45; ESSENTIALS OF ORDER ON THE COLLECTION OF BATTERIES.

- Please refer to the diassembly procedure for the removal of Back-up Battery.
- Leest u voor het verwijderen van de backup batterij deze beschrijving.

## WARNING: CHEMICAL CONTENT NOTICE!

The solder used in the production of this product contains LEAD. In addition, other electrical/electronic and/or plastic (Where applicable) components may also contain traces of chemicals found by the California Health and Welfare Agency (and possibly other entities) to cause cancer and/or birth defects or other reproductive harm.

DO NOT PLACE SOLDER, ELECTRICAL/ELECTRONIC OR PLASTIC COMPONENTS IN YOUR MOUTH FOR ANY REASON WHAT SO EVER!

Avoid prolonged, unprotected contact between solder and your skin! When soldering, do not inhale solder fumes or expose eyes to solder/flux vapor!

If you come in contact with solder or components located inside the enclosure of this product, wash your hands before handling food.

## ■ WARNING

Components having special characteristics are marked ⚠ and must be replaced with parts having specification equal to those originally installed.



Downloaded from www.Manualslib.com manuals search engine

# SPECIFICATIONS

## ● General specifications

| | | |
|---|---|---|
| **Maximum output power** | MAIN STEREO: 135 W+135 W/8Ω @0.5% THD at‹° kHz, 200 W+200 W/4Ω @0.5% THD at 1 kHz<br>MAIN BRIDGE: 400 W/8Ω @0.5% THD at 1 kHz<br>MONITOR: 135 W/8Ω @0.5% THD at 1 kHz, 200 W/4Ω @0.5% THD at 1 kHz | |
| **Frequency response** | 20 Hz–20 kHz +1 dB, –3 dB @1 W output into 8Ω (POWER AMP OUT)<br>20 Hz–20 kHz +1 dB, –3 dB @+4 dB output into 10 kΩ (MAIN OUT, MONITOR OUT, EFFECT OUT) | |
| **Total harmonic distortion** | Less than 0.5% @20 Hz–20 kHz, 100 W output into 4Ω (POWER AMP OUT)<br>Less than 0.3% @20 Hz–20 kHz, +14 dB output into 10 kΩ (MAIN OUT, MONITOR OUT, EFFECT OUT) | |
| **Hum & noise (Average, Rs=150Ω) (with 20 Hz–20 kHz BPF)** | –125 dB equivalent input noise, –68 dB residual output noise (POWER AMP OUT) | |
| | –95 dB residual output noise (MAIN OUT, MONITOR OUT, EFFECT OUT) | |
| | –80 dB (MAIN OUT) | Master level control: nominal level, All channel level controls: minimum |
| | –75 dB (MONITOR OUT) | Master level control: nominal level, All channel level controls: minimum |
| | –71 dB (MAIN OUT) | Master level control: nominal level, 1 channel level control: nominal level |
| | –84 dB (EFFECT OUT) | Master level control: nominal level, All channel level controls: minimum |
| | –64 dB (EFFECT OUT) | Master level control: nominal level, 1 channel level control: nominal level |
| **Maximum voltage gain (PAD: OFF)** | 86 dB CH IN (Lo-Z) to POWER AMP OUT (CH1–6)<br>66 dB CH IN (Lo-Z) to MAIN OUT, MONITOR OUT (CH1–6)<br>72 dB CH IN (Lo-Z) to EFFECT OUT (CH1–6)<br>48 dB CH IN (Lo-Z) to REC OUT (CH1–6)<br>56 dB CH IN (Hi-Z) to MAIN OUT, MONITOR OUT (CH1–6)<br>26 dB AUX IN to MAIN OUT<br>24 dB TAPE IN to MAIN OUT<br>66 dB MIC IN to MAIN OUT (CH7–8)<br>26 dB LINE IN to MAIN OUT (CH7–8) | |
| **Crosstalk at 1 kHz** | –65 dB adjacent input, –65 dB input to output | |
| **Input channel equalization** | ±15 dB Maximum<br>HIGH 10 kHz shelving<br>MID 2.5 kHz peaking<br>LOW 100 Hz shelving<br>* Turn over/roll-off frequency of shelving: 3 dB below maximum variable level. | |
| **Meters** | 5 POINTS LED METER (MAIN OUT L/R, MONITOR OUT) | |
| **Graphic equalizer** | 7 bands (125, 250, 500, 1k, 2k, 4k, 8k Hz)<br>±12 dB Maximum (MAIN OUT, MONITOR OUT) | |
| **Internal digital effect** | 3 types (Vocal, L Hall, S Hall) | |
| **Phantom power** | +48 V is supplied to electrically balanced inputs for powering condenser microphones via 6.8 kΩ current limiting/isolation resisters. | |
| **Limiter** | Comp. : THD≧0.5% (MAIN, MONITOR) | |
| **LIMIT indicators** | Turns on. : THD≧0.5% (MAIN, MONITOR) | |
| **Foot switch** | DIGITAL EFFECT MUTE : on/off | |
| **Optional accessories** | FC5 Foot switch | |
| **Power requirement** | USA and Canada 120 V AC 60 Hz<br>Europe 230 V AC 50 Hz<br>Other 240 V AC 50 Hz | |
| **Power consumption** | 300 W | |
| **Dimensions (WxHxD)** | 497x324x275 mm | |
| **Weight** | 17 kg | |

## ● Input specifications

| Input connectors | PAD | Actual load impedance | Nominal impedance | Input level | | | Connector type |
|---|---|---|---|---|---|---|---|
| | | | | Sensitivity*1 | Nominal level | Max. before cliping | |
| CH INPUT (Lo-Z) | OFF | 3 kΩ | 50–600Ω Mics | –62 dB (616 μV) | –50 dB (2.45 mV) | –20 dB (77.5 mV) | XLR-3-31 |
| (CH1–6) | ON | | 600Ω Lines | –32 dB (19.5 mV) | –20 dB (77.5 mV) | +10 dB (2.45 V) | type |
| CH INPUT (Hi-Z) | OFF | 10 kΩ | 50–600Ω Mics | –52 dB (1.95 mV) | –40 dB (7.75 mV) | –10 dB (245 mV) | Phone jack |
| (CH1–6) | ON | | 600Ω Lines | –22 dB (61.6 mV) | –10 dB (245 mV) | +20 dB (7.75 V) | (TRS)*2 |
| MIC INPUT (CH7, 8) | | 3 kΩ | 50–600Ω Mics | –62 dB (616 μV) | –50 dB (2.45 mV) | –20 dB (77.5 mV) | XLR-3-31 type*2 |
| LINE INPUT (CH7, 8) (L, R) | | 10 kΩ | 600Ω Line | –22 dB (61.6 mV) | –10 dB (245 mV) | +20 dB (7.75 V) | Phone jack |
| TAPE IN (L, R) | | 10 kΩ | 600Ω Line | –22 dBV (79.4 mV) | –10 dBV (316 mV) | +17.8 dBV (7 V) | Phono jack |
| AUX IN (L, R) | | 10 kΩ | 600Ω Line | –22 dB (61.6 mV) | –10 dB (245 mV) | +20 dB (7.75 V) | Phone jack*3 |

*1. Sensitivity is the lowest level that can produce an output of +4 db (1.23 V) or the nominal output level when the unit is set at maximum gain.
*2. Balanced.
*3. Unbalanced.
• 0 dB=0.775 Vrms, 0 dBV=1 Vrms.

## ● Output specifications

| Output connectors | Actual source impedance | Nominal impedance | Output level | | Connector type |
|---|---|---|---|---|---|
| | | | Nominal | Max. before cliping | |
| MAIN AMP OUT (L, R) (A, B) | 0.1Ω | 4/8Ω Speaker | 37.7 W/4Ω | (200 W/4Ω) | Phone jack |
| MAIN BTL OUT | 0.1Ω | 8Ω Speaker | 75.4 W/8Ω | (400 W/8Ω) | Phone jack |
| MONITOR AMP OUT (A, B) | 0.1Ω | 8Ω Speaker | 37.7 W/4Ω | (200 W/4Ω) | Phone jack |
| MAIN OUT (L, R) | 600Ω | 10 kΩ Lines | +4 dB (1.23 V) | +20 dB (7.75 V) | Phone jack |
| MONITOR OUT | 600Ω | 10 kΩ Lines | +4 dB (1.23 V) | +20 dB (7.75 V) | Phone jack |
| EFFECT OUT | 600Ω | 10 kΩ Lines | +4 dB (1.23 V) | +20 dB (7.75 V) | Phone jack |
| REC OUT (1, 2) | 600Ω | 10 kΩ Lines | –10 dBV (316 mV) | +10 dBV (3.16 V) | Phono jack |

• All output jacks are unbalanced.
• 0 dB=0.775 Vrms, 0 dBV=1 Vrms.

Specifications are subject to change without prior notice.



Downloaded from www.Manualslib.com manuals search engine

Downloaded from www.Manualslib.com manuals search engine

# ■ PANEL LAYOUT

## • Channel section

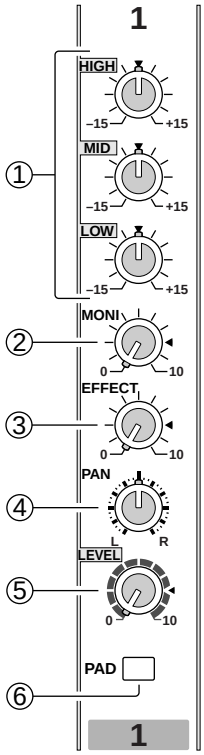


① Equalizer controls (HIGH, MID, LOW)
② Monitor controls (MONI)
③ Effect control (EFFECT)
④ PAN control (BAL/PAN control for CH7/8)
⑤ Level control (LEVEL)
⑥ Pad switch (PAD) (1-6 only)

## • DIGITAL EFFECT section

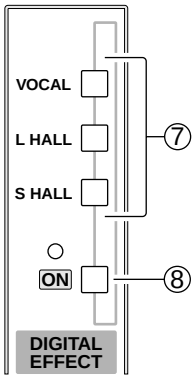


⑦ Effect select switch
⑧ DIGITAL EFFECT ON switch

## • EFFECT section

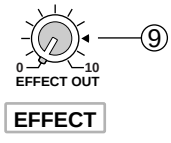


⑨ EFFECT OUT control



Downloaded from www.Manualslib.com manuals search engine

## • MONITOR section

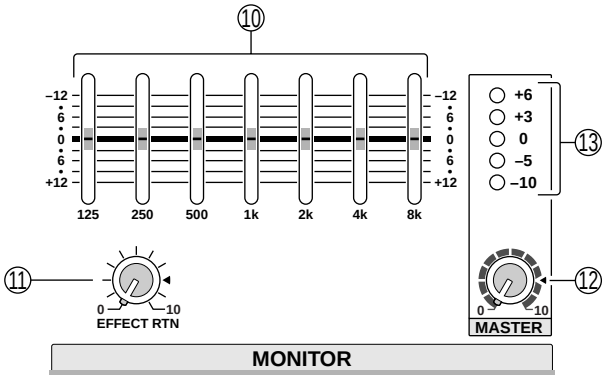


⑩ Graphic equalizer
⑪ EFFECT RTN control
⑫ MASTER control
⑬ Peak level indicator

## • MAIN section

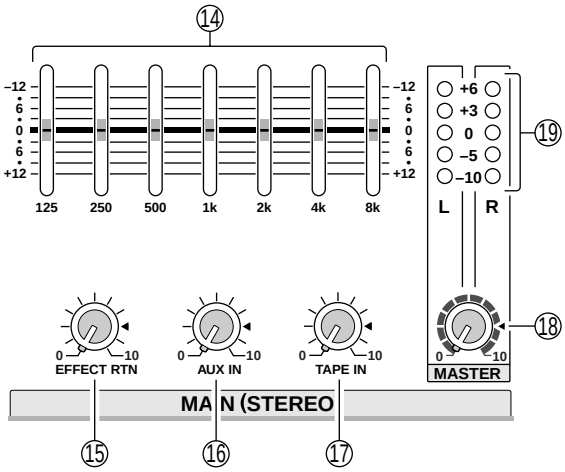


⑭ Graphic equalizer
⑮ EFFECT RTN control
⑯ AUX IN control
⑰ TAPE IN
⑱ MASTER control
⑲ Peak level indicator

## • POWER AMP section

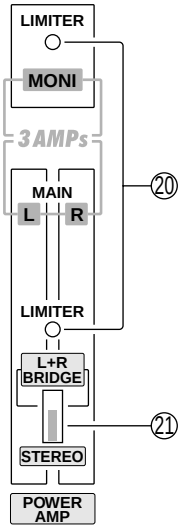


⑳ LIMITER indicator
㉑ Stereo/Bridge select switch

## • POWER indicator & PHANTOM switch

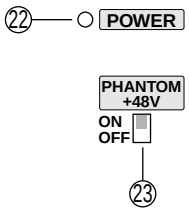


㉒ POWER indicator
㉓ PHANTOM +48 V switch



Downloaded from www.Manualslib.com manuals search engine

• **Input/output panel**

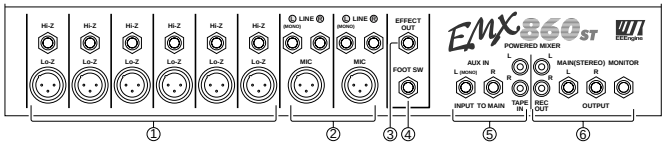


① **Channel input jacks (Hi-Z, Lo-Z) 1-6**
② **Channel input jacks (MIC/LINE) 7-8**
③ **Effect output jack (EFFECT OUT)**
④ **Foot switch jack (FOOT SW)**
⑤ **AUX IN/TAPE IN jacks**
⑥ **REC OUT/MONITOR/MAIN (STEREO) jacks**

• **Rear panel**

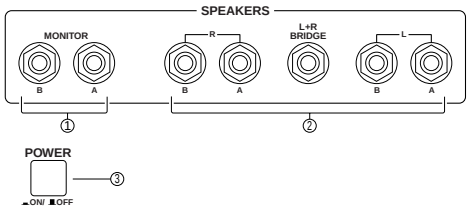


① **SPEAKERS MONITOR jacks**
② **SPEAKERS L/R/L+R BRIDGE jacks**
③ **Power switch**

## CIRCUIT BOARD LAYOUT

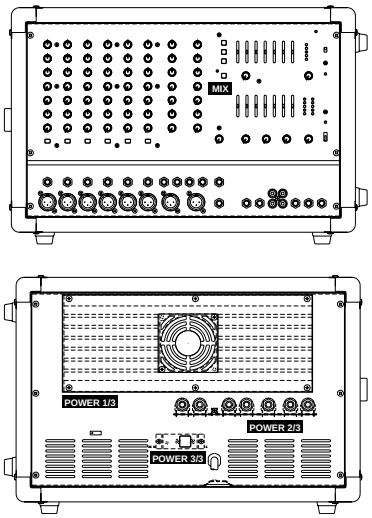


## DIMENSIONS

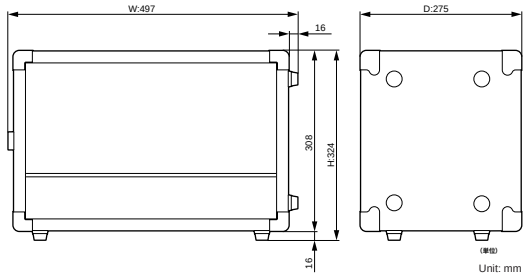




Downloaded from www.Manualslib.com manuals search engine

## BLOCK & LEVEL DIAGRAM

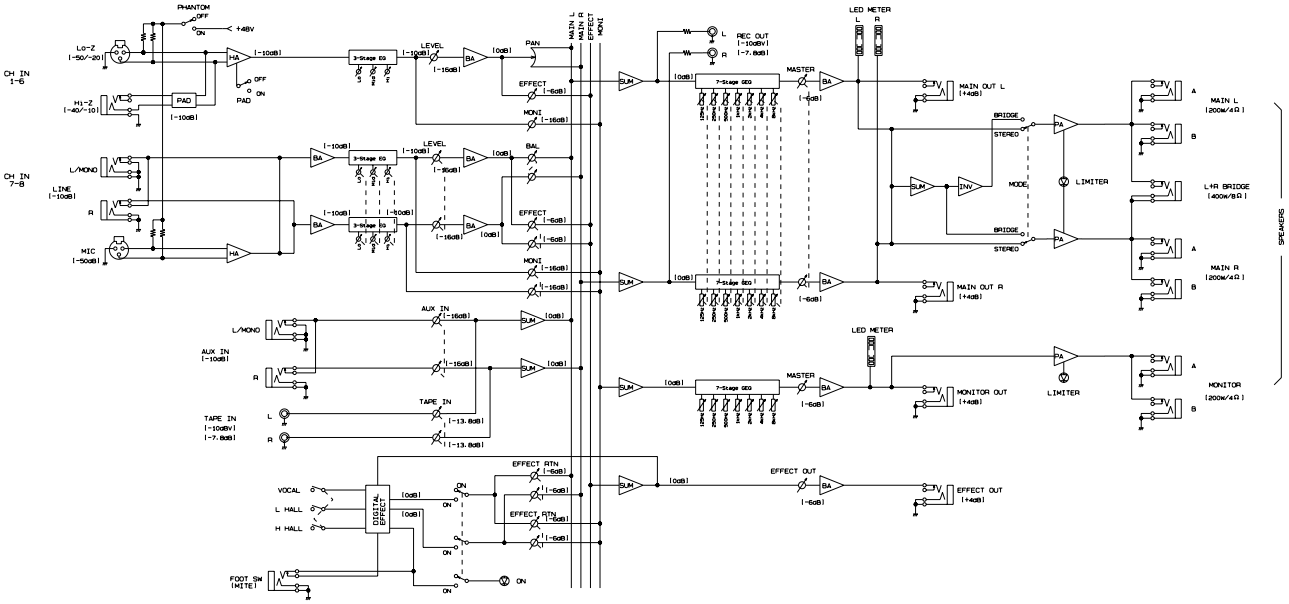


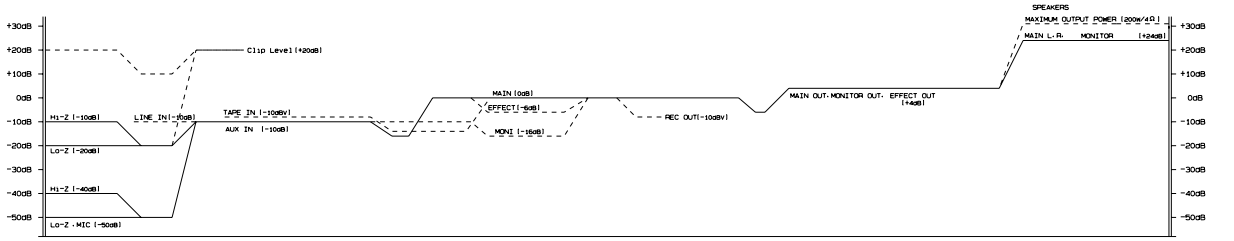


KEC-92359



Downloaded from www.Manualslib.com manuals search engine

# DISASSEMBLY PROCEDURE

**1. MIX Circuit Board**

1-1 Remove the six (6) screws marked [30]. The panel assembly can then be removed. (Fig. 1)

1-2 Remove the sixty-three (63) knobs, the seventeen (17) hexagonal nuts marked [A] and the seventeen (17) screws marked [P120]. (Fig. 1)

1-3 Remove the fourteen (14) screws marked [P40]. The MIX circuit board can then be removed. (Fig. 1)

**2. SUB Circuit Board**

2-1 Remove the panel assembly. (See Procedure 1.)

2-2 Remove the SUB circuit board from the spacer port marked [P110]. (Fig. 2)

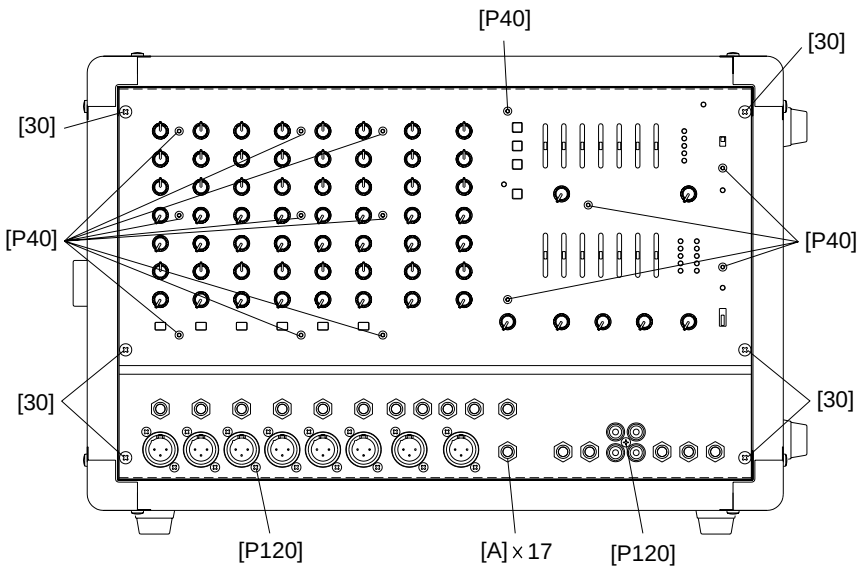


**[30]: Bonding B-Tyte Screw 4.0X8 MFZN2BL (VR779900)**
**[P40]: Hexagonal Socket Screw-P 3X25 MFZNBL (V3289800)**
**[P120]: Bonding Tapping Screw-P 3.0X8 MFZN2BL (VN413300)**

Fig.1

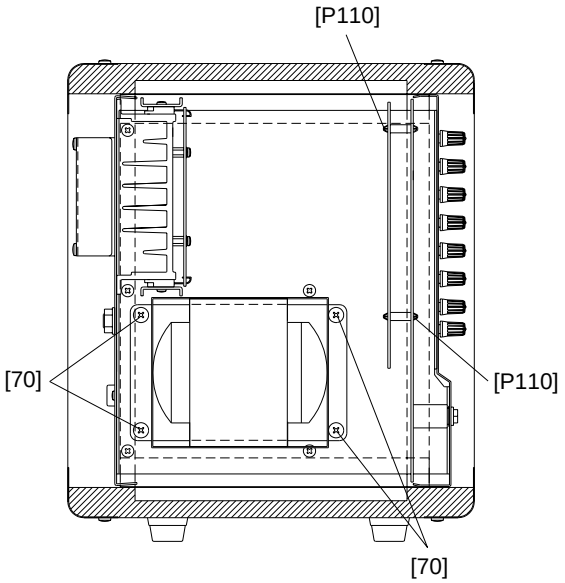


**[70]: Bind Head Screw SP 5.0X10 MFZN2BL (VU688100)**

Fig.2



Downloaded from www.Manualslib.com manuals search engine

**3. PWR 1/3, 2/3, 3/3 Circuit Boards**

3-1 Remove the panel assembly. (See Procedure 1.)

3-2 Remove the two (2) connectors from the power transformer and the six (6) screws marked [50]. The rear assembly can then be removed. (Fig. 3)

3-3 Remove the six (6) screws marked [R150]. The radiating plate with the PWR 1/3 circuit board can then be removed. (Fig. 3)
Remove the fourteen (14) screws marked [R80], the six (6) screws marked [R40] and the TR holder marked [R60]. The PWR 1/3 circuit board can then be removed. (Fig. 4)

3-4 Remove the seven (7) hexagonal nuts marked [B] and the screw marked [R210A].
The PWR 2/3 circuit board can then be removed.

3-5 Remove two (2) screws marked [R210B]. The PWR 3/3 circuit board can then be removed. (Fig. 3)

**4. Motor fan**

4-1 Remove the panel assembly. (See Procedure 1-1.)

4-2 Remove the rear assembly. (See Procedure 3-2.)

4-3 Remove the PWS 1/3 circuit board. (See Procedure 3-3.)

4-4 Remove the two (2) screws marked [R100]. The motor fan can then be removed.

**5. Power transformer**

5-1 Remove the panel assembly. (See Procedure 1-1.)

5-2 Remove the rear assembly. (See Procedure 3-2.)

5-3 Remove the four (4) screws marked [70]. The power transformer can then be removed. (Fig. 2)

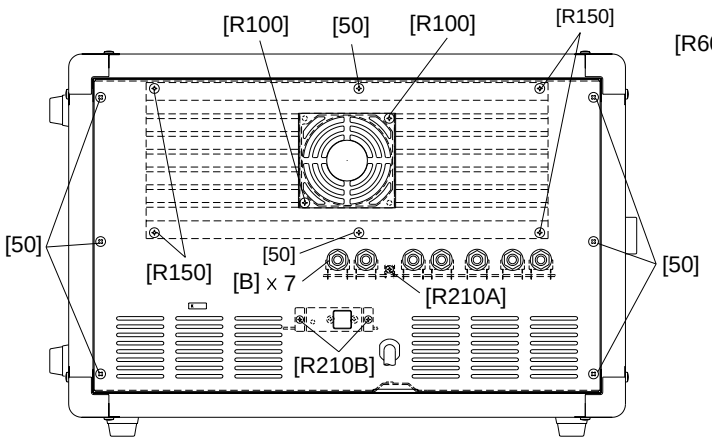


**[50]: Bonding B-Tyte Screw 4.0X8 MFZN2BL (VR779900)**
**[R100]: Bind Head Screw 3.0X30 ZMC2BL (VT520200)**
**[R150]: Bind Head Tapping Screw-B 4.0X8 MFZN2BL (EG340190)**
**[R210]: Bonding Tapping Screw-B 3.0X8 MFZN2BL (VN413300)**

Fig.3

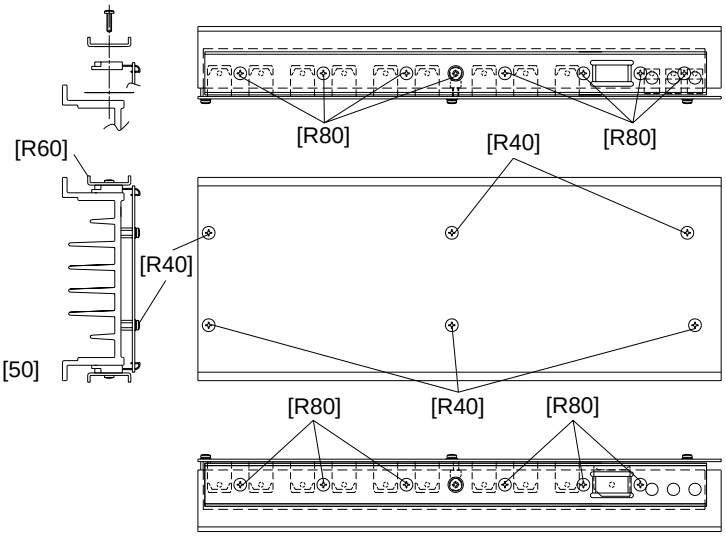


**[R40]: Bind Head Screw SP 3.0X8 MFZN2Y (EG330290)**
**[R80]: Bind Head Tapping Screw-B 3.0X12 MFZN2BL (VQ074600)**

Fig.4



Downloaded from www.Manualslib.com manuals search engine

## LSI PIN DISCRIPTION

• **YSS234** (XN299A00) Digital Sound Processor

| PIN NO. | NAME | I/O | FUNCTION | PIN NO. | NAME | I/O | FUNCTION |
|---|---|---|---|---|---|---|---|
| 1 | MD4 | I/O | | 33 | AVDD | - | DC A+5Vs bus |
| 2 | MD3 | I/O | | 34 | VDD | - | DC D+5V |
| 3 | MD0 | I/O | External RAM interface data | 35 | TST0 | - | DC D+5V |
| 4 | MD1 | I/O | | 36 | TST1 | - | DC D+5V |
| 5 | MD2 | I/O | | 37 | DOEN | - | DC D+5V |
| 6 | MCKO | O | Master clock output | 38 | SDO1 | O | N.C. |
| 7 | XO | O | Crystal oscillator connection | 39 | SDO0 | O | N.C. |
| 8 | XI | I | Crystal oscillator connection | 40 | WC | O | N.C. |
| 9 | ER0 | I | | 41 | BCO | O | N.C |
| 10 | ER1 | I | Eary refrection preset select | 42 | MA0 | O | |
| 11 | ER2 | I | | 43 | MA1 | O | |
| 12 | REV0 | I | | 44 | MA2 | O | |
| 13 | REV1 | I | Effect select | 45 | MA3 | O | |
| 14 | REV2 | I | | 46 | MA4 | O | |
| 15 | MUTEN | I | DC D+5V | 47 | MA5 | O | External RAM interface address |
| 16 | ICN | I | Initial clear | 48 | MA6 | O | |
| 17 | PRG | I | DC D+5V | 49 | MA7 | O | |
| 18 | MODE | I | Preset mode (H=DC +5V) | 50 | MA12 | O | |
| 19 | VSS | - | Ground | 51 | MA14 | O | |
| 20 | AVSS | - | Ground | 52 | VSS | - | Ground |
| 21 | CVA | - | N.C. | 53 | MA10 | O | |
| 22 | AORL | O | N.C. | 54 | MA011 | O | |
| 23 | AORR | O | N.C. | 55 | MA09 | O | External RAM interface address |
| 24 | CHL | I | Sample hold capacitor connection | 56 | MA8 | O | |
| 25 | AIL | I | Lch ADC input | 57 | MA13 | O | |
| 26 | VDD | - | DC D+5V | 58 | VDD | - | DC D+5V |
| 27 | AIR | I | Rch ADC input | 59 | WEN | I | Write enable |
| 28 | CHR | I | Sample hold capacitor connection | 60 | OEN | I | Output enable |
| 29 | AOFL | O | Lch DAC output | 61 | CEN | I | Chip select |
| 30 | AOFR | O | Rch DAC output | 62 | MD7 | I/O | |
| 31 | AVDD | - | DC A+5V | 63 | MD6 | I/O | External RAM interface data |
| 32 | CVB | I | Rch midpoint voltage | 64 | MD5 | I/O | |

## IC BLOCK DIAGRAM

• **NJM2068L-D** (XM356A00)
**NJM4558L** (XM922A00)
Dual Operational Amplifier

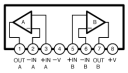


• **BA6137** (XA534A00)
LED Driver

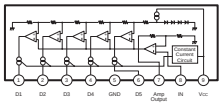


• **M5229P** (XG203A00)
7 SEGMENTS GRAPHIC EQUALIZER

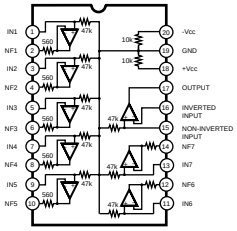


• **TC74HC14AP** (IR001400)
Hex Inverter

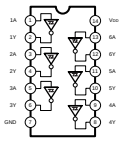


• **TC74HC74AP** (IR007400)
Dual D-Type Flip-Flop

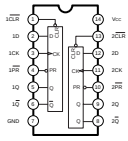


| INPUTS | | | | OUTPUTS | |
|---|---|---|---|---|---|
| PR | CLR | CK | D | Q | Q |
| L | H | × | × | H | L |
| H | L | × | × | L | H |
| L | L | × | × | H | H |
| H | H | ↑ | H | H | L |
| H | H | ↑ | L | L | H |
| H | H | L | × | $Q_0$ | $\overline{Q}_0$ |



Downloaded from www.Manualslib.com manuals search engine

## CIRCUIT BOARDS

• MIX Circuit Board

CN803: to SUB-CN101

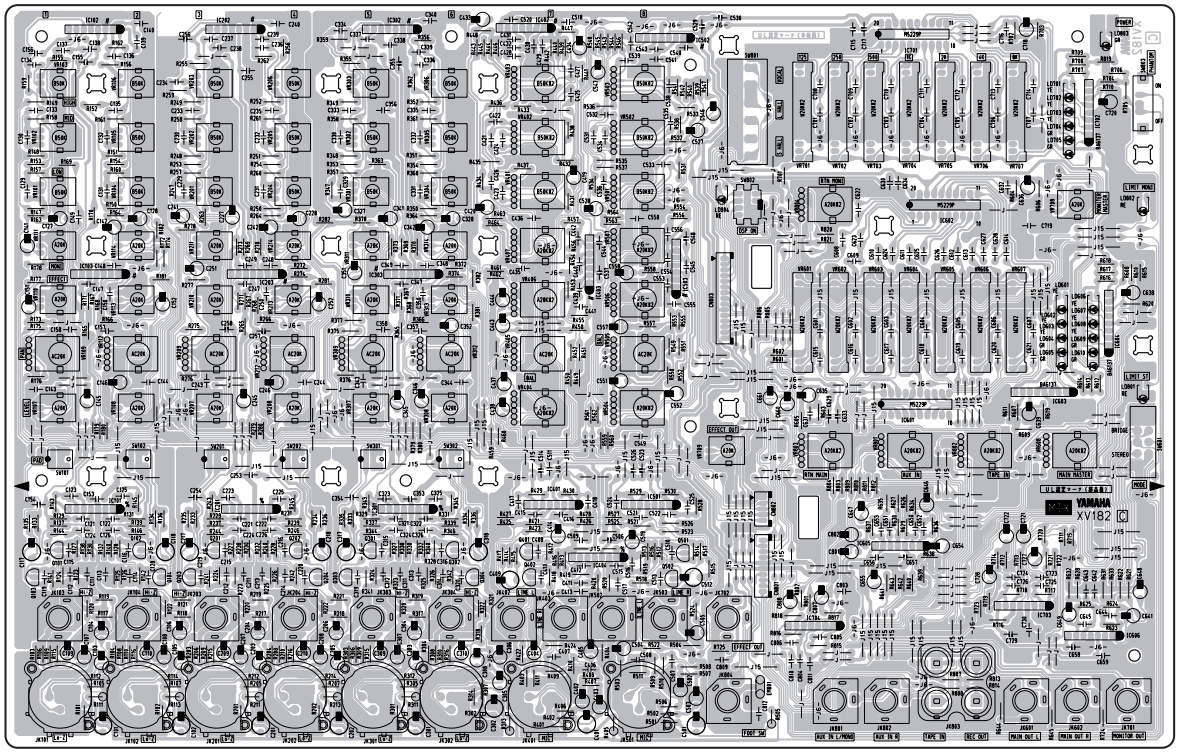

Component side

• LED installation

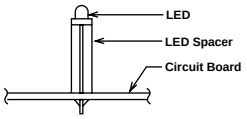


Note : See parts list for details of circuit board component parts.



Downloaded from www.Manualslib.com manuals search engine

• **SUB Circuit Board**

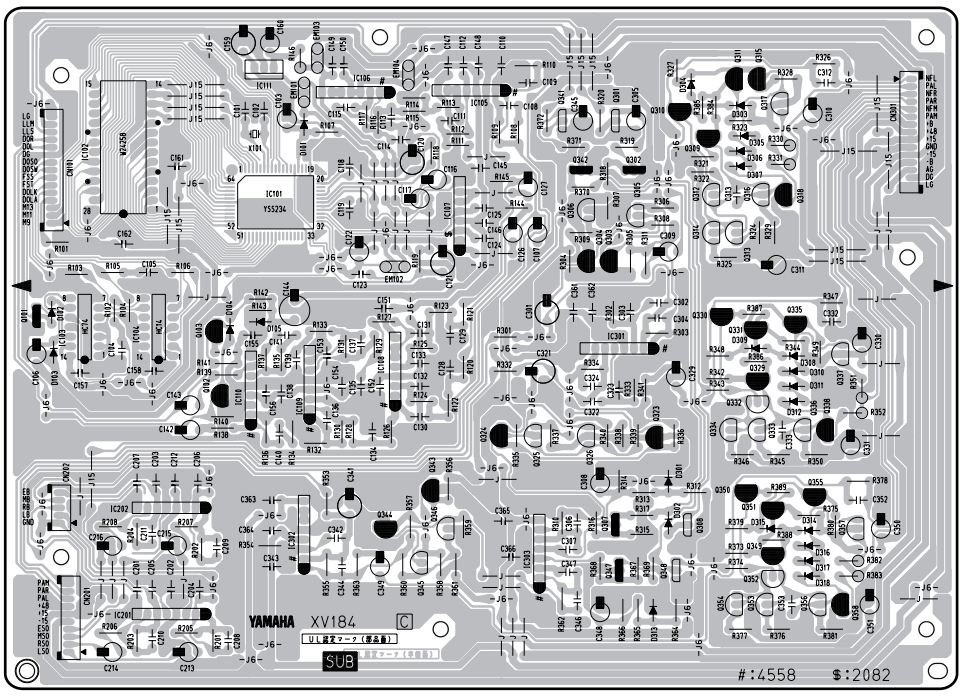


**Component side**

3NA-V295250



Downloaded from www.Manualslib.com manuals search engine

• PWR 1/3 Circuit Board

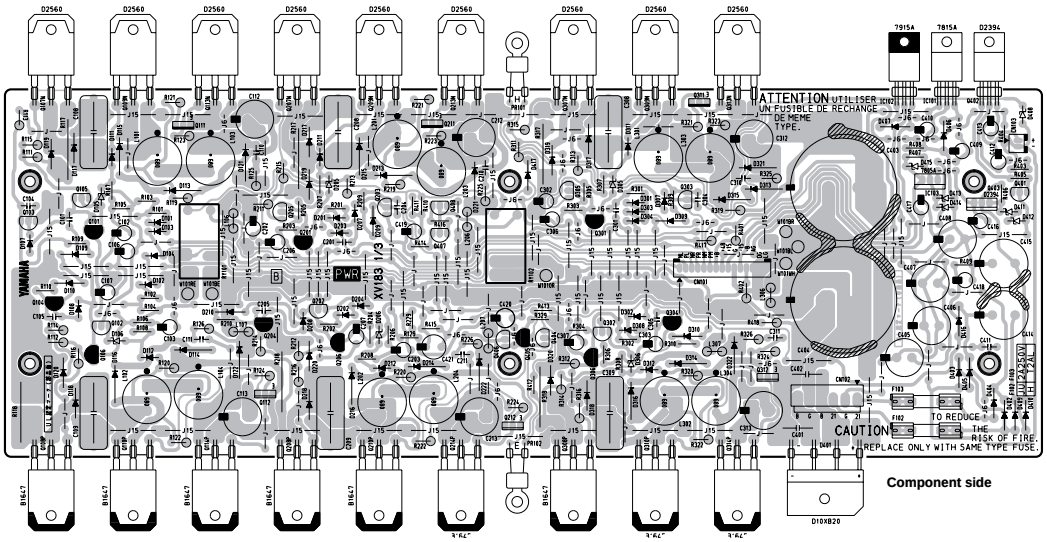


• PWR 2/3 Circuit Board

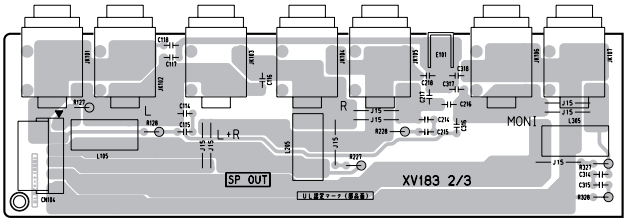


• PWR 3/3 Circuit Board

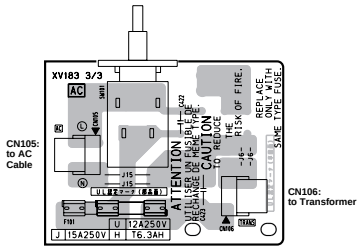






Downloaded from www.Manualslib.com manuals search engine

# INSPECTIONS

### 1. Measuring Instruments

| | |
|---|---|
| Low Frequency Oscillator: | Balance Output, Output Impedance = 150 ohms |
| Oscilloscope: | Input Impedance >= 100 kohms |
| Level Meter: | Input Impedance >= 100 kohms |

Note: Use a balance input measuring instrument

### 2. Mixer Part

### 2-1 Setting Conditions

Setting conditions are as follows unless otherwise specified.

### 2-2 Input and Output Load

| | |
|---|---|
| Input Signal: | 1 kHz, sine wave (Rs = 150 ohms) |
| Load: | All output terminals have a 10 k ohms load |

### 2-3 Control Panel Setting

| | |
|---|---|
| Channel Input (CH1-CH6) Section | |
| EQ (HIGH, MID, LOW) level controls: | Center |
| MONITOR level control: | Maximum |
| EFFECT level control: | Maximum |
| PAN: | Center |
| LEVEL: | Maximum |
| PAD: | OFF |
| Stereo Channel Input (CH7-CH8) Section | |
| EQ (HIGH, MID, LOW) level controls: | Center |
| MONITOR level control: | Maximum |
| EFFECT level control: | Maximum |
| PAN: | Center |
| LEVEL: | Maximum |
| EFFECT Section | |
| DIGITAL EFFECT ON switch | OFF |
| EFFECT OUT level control | Maximum |
| MAIN Section | |
| GRAPHIC EQUALIZER (7 band) Fader: | Center |
| EFFECT RTN level control: | Maximum |
| AUX IN: | Maximum |
| TAPE IN: | Maximum |
| MASTER (MAIN): | Maximum |
| MONITOR Section | |
| GRAPHIC EQUALIZER (7 band) Fader: | Center |
| EFFECT RTN level control: | Maximum |
| MASTER (MAIN) level control: | Maximum |
| Others | |
| PHANTOM +48V switch | OFF |
| POWER AMP switch | STEREO |



Downloaded from www.Manualslib.com manuals search engine

## 2-4 Gain

Each output gain should be as shown in the table below.

Table 1: INPUT CH 1-CH 6 [Units: dBs]

| Input Terminal | Input Level | MAIN OUT (L, R) | MONITOR OUT | EFFECT OUT | REC OUT (L, R) |
|---|---|---|---|---|---|
| Lo-Z | -62 | $+1^{+2.5}_{-2.0}$ | +4 ± 2 | $+10^{+2.5}_{-2.0}$ | $-16.8^{+2.5}_{-2.0}$ |
| | -32 (PAD ON) | | | | |
| Hi-Z | -52 | $+1^{+2.5}_{-2.0}$ | - | - | - |

Note: When the POWER AMP MODE switch is set to the BRIDGE side, confirm the gain

Table 2: INPUT CH7-CH8 [Units: dBs]

| Input Terminal | Input Level | MAIN OUT | MONITOR OUT | EFFECT OUT |
|---|---|---|---|---|
| MIC | -62 | $+1^{+2.5}_{-2.0}$ | +7 ± 2 | $+13^{+2.5}_{-2.0}$ |
| LINE L | -22 | $+1^{+2.5}_{-2.0}$ | +7 ± 2 | $+13^{+2.5}_{-2.0}$ |
| LINE R | -22 | $+1^{+2.5}_{-2.0}$ | +1 ± 2 | $+7^{+2.5}_{-2.0}$ |

Table 3: AUX IN and TAPE IN [Units: dBs]

| Input Terminal | Input Level | MAIN OUTPUT |
|---|---|---|
| AUX IN | -22 | +4 ± 2 |
| TAPE IN | -22 | +1.8 ± 2 |

## 2-5 Frequency Response

When the input signal frequency is set to 20 Hz and 20 kHz for the systems shown in Tables 1, 2 and 3, the each output terminal should fall within the range of +1 and -3 dB at 20 Hz and 20 kHz, using 1 kHz as the reference.

## 2-6 Equalizer Characteristics

When the input signals shown below are applied to the channel input in the states of 2-3 and the channel EQ (HIGH,MID, LOW) level controls are changed from center position (flat), the boost/cut range at the MAIN OUT should be as follows:

Table 4 [Units: dB]

| EQ Controls | GAIN | Frequency | Response |
|---|---|---|---|
| LOW | Maximum | 100 Hz | +12 ± 2 |
| | Minimum | | +12 ± 2 |
| MID | Maximum | 2.5 kHz | +12 ± 2 |
| | Minimum | | +12 ± 2 |
| HIGH | Maximum | 10 kHz | +12 ± 2 |
| | Minimum | | +12 ± 2 |

If the result of the equalizer is out of the specified range, change the input signal frequency so that the output signal is at the set level. Its frequency should then be within the range of 80 - 120% of the standard frequency.

## 2-7 Graphic Equalizer Characteristics

When the input signals shown below are applied to the channel input in the states of 2-3 and graphic equalizer level controls are changed from center position (flat), the boost/cut range at the MAIN OUT and the MONITOR OUT should be as follows:

Table 5 [Units: dB]

| | | Input signal frequency and Fader name | | | | | | |
|---|---|---|---|---|---|---|---|---|
| | | 125 Hz | 250 Hz | 500 Hz | 1 kHz | 2 kHz | 4 kHz | 8 kHz |
| Response | Maximum | +12 ± 2 | | | | | | |
| | Minimum | -12 ± 2 | | | | | | |

If the result of the graphic equalizer is out of the specified range, change the input signal frequency so that the output signal is at the set level. Its frequency should then be within the range of 80 - 120% of the standard frequency.



Downloaded from www.Manualslib.com manuals search engine

### 2-8 Meter LED

When the MAIN OUT and MONITOR OUT output levels are as shown in the table below, the corresponding METER LED lights up.

Table 6 [Units: dBs]

| LED Name | Lighting Level |
|---|---|
| +6 | +10 ± 2 |
| +3 | +7 ± 2 |
| 0 | +4±2 |
| -5 | -1 ± 2 |
| -10 | -6 ± 2.5 |

### 2-9 Distortion

Set each volume control of the INPUT section and MASTER section to nominal for the systems shown in Tables 1, 2 and 3. When each output except the REC OUT level reaches +14 dBs, the distortion ratio should be less than 0.1 % from 20 Hz to 20 kHz.

### 2-10 Maximum Output Level

In the states of 2-9, the maximum output levels of MAIN OUT, MONITOR OUT and EFFECT OUT should be +20 dBs with a distortion of less than 1%.

### 2-11 Equivalent Input Noise

The measurement CH level volume is assumed to be at maximum, and the other CH level volumes are assumed to be at minimum in the states of 2-3.

When the Lo-z and MIC input terminals are connected with a 150 ohms resistor, the MAIN OUT terminal noise level should be less than -61 dBs. If the noise level does not reach -61 dBs due to a gain variance, the converted noise level (= noise level minus the actual gain of the channel) should be less than -124 dBs. (Apply a DIN-AUDIO filter.)

### 2-12 Residual Noise

Set all the input level controls at minimum in the states of 2-3. When the MASTER and EFFECT OUT level controls in the MAIN and MONITOR section are changed to maximum or minimum, the residual noise should be as shown in the table below. (Apply a DIN-AUDIO filter.)

Table 7 [Unit: dBs]

| MASTER VOLUME | MAIN OUTPUT | MONITOR OUT | EFFECT OUT |
|---|---|---|---|
| Maximum | -73 | -68 | -77 |
| Minimum | -94 | -94 | -94 |

### 2-13 Phantom Power (+48 V)

Connect a load resistance of 10 K ohm (more than 1W) between pins 1 and 2 of both the Lo-z IN and the MIC IN input terminals, then short between pins 2 and 3 of the Lo-z IN and the MIC IN input terminal.

When the PHANTOM switch is turned on, +35 ± 3 V should be obtained between the load resistance.

### 2-14 Digital Effect

When the DIGITAL EFFECT ON switch is turned on, the ON LED lights up. When the DIGITAL EFFECT ON switch is turn off, the ON LED light goes out.

When the DIGITAL EFFECT ON switch is turned on while inputting a sine wave of -60 dB to the CH1 Lo-z IN at a minimum MONITOR level control setting, the signal level of the MONITOR OUT will be more than -25 dBs. Even if the SELECT switch is changed to VOCAL, L HALL and S HALL, confirm that the output level is even.

Confirm that the output soundfrom the vocals musics souce has a digital effect, and confirm that the effect is able to be turned on and off by the FOOT SW.

### 2-15 Stability

When a capacitor of 10 FP to 0.1 F is connected in parallel to the loading resistor at each SPEAKER OUT terminal, or when all VR and EQ control volumes are set to MAX , there should be no abnormality; for example, there should be no oscillation. Especially, do not oscillate if the FREQ LEVEL is at maximum.



Downloaded from www.Manualslib.com manuals search engine

## 3. Power Amplifier Part

### 3-1 Setting Conditions

Setting conditions are as follows unless otherwise specified.

| | |
|---|---|
| Input Terminal: | INPUT CH 8 LINE L |
| POWER AMP switch: | STEREO |
| Measuring Output Terminal: | (SPEAKERS) L-A, R-A, MONITOR-A |
| Output Load: | 4 ohm (more than 200 W) |
| | Connect the resistor when inspecting the power amplifier section |
| INPUT CH 1- CH 7 | |
| MONITOR level control: | Minimum |
| EFFECT level control: | Minimum |
| LEVEL level control: | Minimum |

Note: Other control settings are the same as the mixer part in section 2-3.

### 3-2 Power ON Muting

The muting relay should be released 2.5 +/- 1 seconds after the power switch is turned on.

### 3-3 Speaker Terminal DC Voltage

When input terminals are grounded, confirm that each output terminal voltage is 0 +/- 100 mV.

### 3-4 Gain

When applying a 1 kHz -26.0 dBs sine wave to an INPUT terminal, confirm that the SPEAKERS L+R terminal output levels are +17.0 $^{+2.5}_{-2.0}$ dBs and the SPEAKERS MONITOR terminal output levels is +23.0 dB $^{+2.5}_{-2.0}$ dBs.
The SPEAKERS L-B, R-B and MONITOR B output terminals should also be measured.

### 3-5 Frequency Response

Apply a 20 Hz, 1 kHz and 20 kHz = 26 dB sine wave signal separately to the input; the output level should be between -3 and +1 dB at 20 Hz and 20 kHz, when 1 kHz is set as the reference. (0 dB)

### 3-6 Harmonic Distortion

Apply a 1 kHz sine wave signal to the input; the three output levels should be 200 W/4 ohms (31.2 dBs/ch); the distortion ratio should be less than 0.5 %.
Apply a sine wave signal of 20 Hz, 1 kHz and 20 kHz separately to the input; the three output level should be 100 W /4 ohms (28.2 dBs/ch); the distortion ratio should be less than 0.5 %.
Do this inspection within 30 seconds.

### 3-7 Residual Noise

Set the MASTER level controls (MONITOR and MAIN) at minimum; the residual noise should be less than -68 dBs.
Notes: Apply a DIN-AUDIO filter.

### 3-8 Stability

Apply a 10 kHz -26 dBs rectangular signal to the input and connect a capacitor (10 pF to 0.47 F) parallel to the 4 ohm load resistor, or connect an inductor (10 H to 0.47 H) serial to the 4 ohm load resistor. Confirm that the output signal is as illustrated below.

| | |
|---|---|
| Overshoot: | Vp/Vo <= 1.8 |
| Ringing: | 5 waves and less than 5 waves |

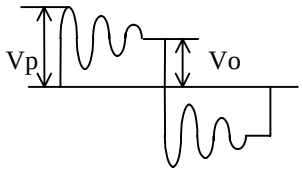


Next, only connect a capacitor (10 pF to 0.47µF) to the SPEAKERS terminal as a load, and confirm that the output is as follows:

| | |
|---|---|
| Overshoot: | Vp/Vo <= 2.5 |
| Ringing: | It should end within 7 waves; there is no oscillation. |



Downloaded from www.Manualslib.com manuals search engine

### 3-9 Protection

Apply a 10 Hz sine wave signal to the input; increase the input signal so that the output signal is clipped. Confirm that the protection does not operate and that the speaker relay does not be open.
When applying a 1 Hz, 6 Vp-p (8.7 dBs) sine wave signal to the input, confirm that the protection operates within 2 seconds and that the speaker relay is turned off. When turning off the input signal, confirm that the protection stops the operation seconds and that the speaker relay automatically turns on within 5 seconds.

### 3-10 PC Limiter and Limiter

Apply a 1 kHz -20 dBs sine wave signal to the input and then connect a 1 ohm ( +/- 5% 100 W) resistor; confirm that the output signal is Vp-p <= 20V and that the signal is not rectangular.

### 3-11 LIMITER Indicator

When applying a 1 kHz -10.8 dBs sine wave signal to the input, the LIMITER indicator should light up.

### 3-12 Efficiency

When adjusting for the output of L and R to become 10V (+2.2 dBs), confirm that the power consumption is 330 +/- 50W.

## 4. Main Bridge

### 4-1 Setting Conditions

| | |
|---|---|
| Input Terminal: | INPUT CH 8 LINE L |
| POWER AMP switch: | BRIDGE |
| Measuring Output Terminal: | SPEAKERS, L + R BRIDGE |
| Output Load: | 8 ohm (more than 400 W) |

INPUT CH 1- CH 7

| | |
|---|---|
| MONITOR level control: | Minimum |
| EFFECT level control: | Minimum |
| LEVEL level control: | Minimum |

Note: Other control settings are the same as the mixer part in section 2-3.

### 4-2 Connection

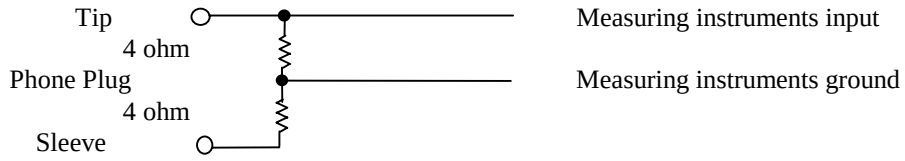


### 4-3 Gain

Apply a 1 kHz -26.0 dBs sine wave signal to the input; confirm that the output levels are +20.0 dBs $^{+2.5}_{-2.0}$ dB.

### 4-4 Frequency Response

Apply a sine wave signal to the input; the output level should be between -3 and +1 dB at 20 Hz and 20 kHz, when 1 kHz is set as the reference. (0 dB)

## 5. Power Supply Fluctuation

There should be no operational problems when the power supply fluctuation is within +/- 10% of the nominal voltage.



Downloaded from www.Manualslib.com manuals search engine

Downloaded from www.Manualslib.com manuals search engine

Downloaded from www.Manualslib.com manuals search engine

Downloaded from www.Manualslib.com manuals search engine

Downloaded from www.Manualslib.com manuals search engine

Downloaded from www.Manualslib.com manuals search engine

EMX 360ST
POWERED MIXER

# PARTS LIST

CONTENTS

OVERALL ASSEMBLY ..... 2
ELECTRICAL PARTS ..... 4

**Notes : DESTINATION ABBREVIATIONS**

| | | | |
|---|---|---|---|
| J | : Japanese model | A | : Australian model |
| U | : U.S.A. model | E | : European model |
| C | : Canadian model | D | : German model |
| X | : General export model | B | : British model |
| M | : South African model | I | : Indonesian model |
| H | : North European model | O | : Chinese model |
| V | : Generol export model (110V) | H | : Generol export model (220V) |

## ■ WARNING

Components having special characteristics are marked ⚠ and must be replaced with parts having specification equal to those originally installed.

- The numbers “QTY” show quantities for each unit.
- The parts with “--” in “PART NO.” are not available as spare parts.
- This mark “ } ” in the REMARKS column means these parts are interchangeable.

Downloaded from www.Manualslib.com manuals search engine

# OVERALL ASSEMBLY

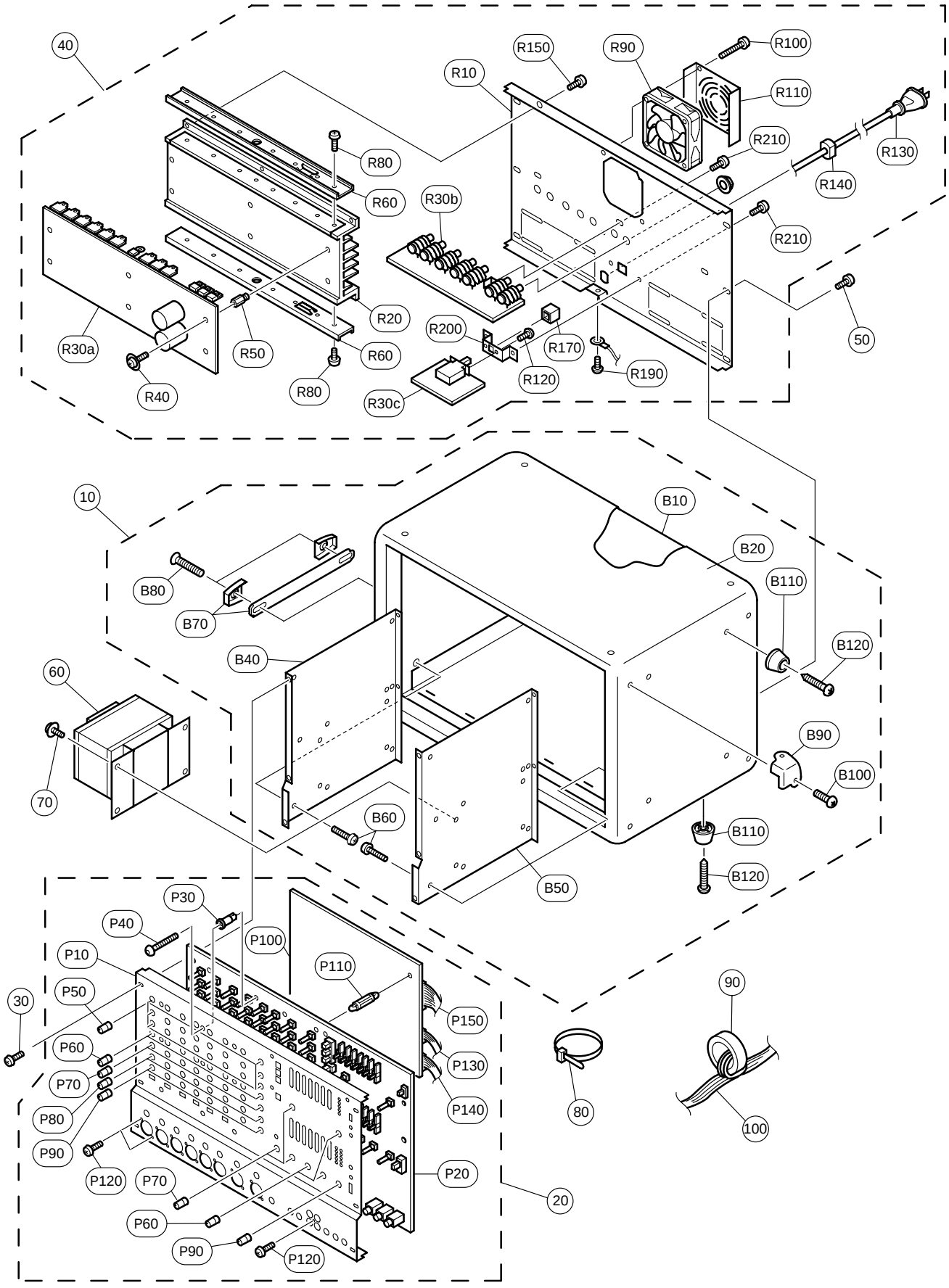




Downloaded from www.Manualslib.com manuals search engine

| | REF NO. | PART NO. | DESCRIPTION | | | REMARKS | QTY | RANK |
|---|---|---|---|---|---|---|---|---|
| | | | OVERALL ASSEMBLY | | | EMX860ST | | |
| | | -- | Overall Assembly | J | | J (V290650) | | |
| | | -- | Overall Assembly | U V | | U,V (V290660) | | |
| | | -- | Overall Assembly | H W | | H,W (V290670) | | |
| | | -- | Overall Assembly | B | | B (V290680) | | |
| | | -- | Overall Assembly | A | | A (V290690) | | |
| * | 10 | **V2953900** | Body Assembly | | | | | |
| | 20 | -- | Panel Assembly | | | (V295300) | | |
| | 30 | **VR779900** | Bonding B-Tyte Screw | 4.0X8 MFZN2BL | | | 6 | 01 |
| | 40 | -- | Rear Assembly | J | | J (V295310) | | |
| | 40 | -- | Rear Assembly | U | | U,V (V295320) | | |
| | 40 | -- | Rear Assembly | H | | H,W (V295330) | | |
| | 40 | -- | Rear Assembly | B | | B (V295340) | | |
| | 40 | -- | Rear Assembly | A | | A (V295350) | | |
| | 50 | **VR779900** | Bonding B-Tyte Screw | 4.0X8 MFZN2BL | | | 6 | 01 |
| * | 60 | **XV025A00** | Power Transformer | E | | J | | |
| * | 60 | **XV026A00** | Power Transformer | UL CSA | | U,V | | |
| * | 60 | **XV027A00** | Power Transformer | CE | | H,W,B | | |
| * | 60 | **XV028A00** | Power Transformer | AS | | A | | |
| | 70 | **VU688100** | Bind Head Screw | SP 5.0X10 MFZN2BL | | | 4 | 01 |
| | 80 | **VV104600** | Cord Holder | CV-100 | | | 3 | 01 |
| | 90 | **V3225000** | Ferrite Core | HF57T25X12X15 | | | | 03 |
| | 100 | -- | Connector Assembly | 2426&2426 15P 500L | | (V297030) | | |
| | | | | | | | | |
| * | | **V2953900** | Body Assembly | | | | | |
| | B10 | -- | Body | | | (V291470) | | |
| | B20 | -- | Carpet | C948 | | (V297020) | | |
| | B30 | -- | Shield Sheet | | | (VV43470) | 2 | |
| | B40 | -- | Side Plate | LELT | | (V291490) | | |
| | B50 | -- | Side Plate | RIGHT | | (V291480) | | |
| | B60 | **EG340330** | Bind Head Screw | 4.0X18 MFZN2BL | | | 11 | 01 |
| | B70 | **VV085400** | Handle | U | | | | 04 |
| | B80 | **VV435200** | Oval Head Screw | 5.0X35 MFZN2BL | | | 2 | 01 |
| | B90 | **VV085500** | Corner Protector | | | | 8 | 03 |
| | B100 | **03747270** | Truss Head Tapping Screw-1 | 4.0X12 MFZN2BL | | | 16 | |
| | B110 | **VV085600** | Foot | | | | 8 | 01 |
| | B120 | **03747290** | Truss Head Tapping Screw-1 | 4.0X20 MFZN2BL | | | 8 | 01 |
| | | | | | | | | |
| | | -- | Panel Assembly | | | (V295300) | | |
| * | P10 | **V2907400** | Front Panel | | | | | |
| * | P20 | **V2952400** | Circuit Board | MIX | | | | |
| * | P30 | **V3291600** | PCB Support | NEW NIFCO | | | 14 | |
| * | P40 | **V3289800** | Hexagonal Socket Screw-P | 3X25 MFZNBL | | | 14 | |
| | P50 | **VU860200** | Knob | MX-GREEN/D-GRAY | | 1-8ch(HIGH,MID,LOW) | 24 | 01 |
| | P60 | **VU859700** | Knob | N-GRAY/D-GRAY | | 1-8ch(MONI),TAPE IN | 11 | 01 |
| | P70 | **VU860300** | Knob | | | MONITOR(MASTER), MAIN(STEREO)AUX IN MX-BLUE/D-GRAY 1-8ch(EFFECT), EFFECT(EFFECT OUT), MONITOR(EFFECT RTN) | 11 | 01 |
| | P80 | **VU860400** | Knob | RED/D-GRAY | | 1-8ch(PAN) | 8 | 01 |
| | P90 | **VV625800** | Knob | ORANGE/D-GRAY | | 1-8ch(LEVEL), MAIN(STEREO)MASTER | 9 | 01 |
| | P90 | **VV625800** | Knob | ORANGE/D-GRAY | | | | |
| * | P100 | **V2952500** | Circuit Board | SUB | | | | |
| * | P110 | **V3224800** | Spacer Port | KCA-14 PIN GOO | | | 6 | |
| | P120 | **VN413300** | Bonding Tapping Screw-B | 3.0X8 MFZN2BL | | | 17 | 01 |
| | P130 | -- | Connector Assembly | 2426&2426 5P 100L | | (VZ01610) | | |
| | P140 | -- | Connector Assembly | 2426&2426 10P 100 | | (V297050) | | |
| | P150 | -- | Connector Assembly | 2426&2426 15P 120 | | (V322540) | | |
| | | | | | | | | |
| | | -- | Rear Assembly | J | | J (V295310) | | |
| | | -- | Rear Assembly | U | | U,V (V295320) | | |
| | | -- | Rear Assembly | H | | H,W (V295330) | | |
| | | -- | Rear Assembly | B | | B (V295340) | | |
| | | -- | Rear Assembly | A | | A (V295350) | | |
| * | R10 | **V2907500** | Rear Panel | J | | J | | |
| * | R10 | **V2907700** | Rear Panel | U | | U,V | | |
| * | R10 | **V2907800** | Rear Panel | H | | H,W,B | | |
| * | R10 | **V2907900** | Rear Panel | A | | A | | |
| | R20 | -- | Heat Sink | | | (V294800) | | |

✻: New Parts

RANK : Japan only

| | REF NO. | PART NO. | DESCRIPTION | | | REMARKS | QTY | RANK |
|---|---|---|---|---|---|---|---|---|
| * | R30a | **NX820610** | Circuit Board | PWR J | | J | | |
| * | R30a | **NX820620** | Circuit Board | PWR U | | U,V | | |
| * | R30a | **NX820630** | Circuit Board | PWR H | | H,W,B,A | | |
| * | R30b | **NX820640** | Circuit Board Assembly | SP OUT | | | | |
| * | R30c | **NX820650** | Circuit Board Assembly | AC | | J,U,V | | |
| * | R30c | **NX820660** | Circuit Board Assembly | AC | | H,W,B,A | | |
| | R40 | **EG330290** | Bind Head Screw | SP 3.0X8 MFZN2Y | | | 6 | 01 |
| | R50 | **VV086500** | Support | H=7.4 B=5.5 | | | 6 | 01 |
| | R60 | -- | Angle | | | (V291510) | 2 | |
| * | R70 | **V2954800** | Insulation Sheet | | | | 2 | |
| | R80 | **VQ074600** | Bind Head Tapping Screw-B | 3.0X12 MFZN2BL | | | 15 | 01 |
| * | R90 | **V2955500** | Fan | 3110KL05WB50L34 | | | | |
| | R100 | **VT520200** | Bind Head Screw | 3.0X30 ZMC2BL | | | 2 | 01 |
| * | R110 | **V2951400** | Angle Bracket, Fan | | | | | |
| | R120 | **VB659000** | Bind Head Screw | 3.0X8 MFZN2BL | | | 2 | 01 |
| * | R130 | **V3277000** | AC Cord | J VCTF 2X0.75 12A | | J | | |
| | R130 | **VV205600** | AC Cord | UC SJT 3X#18 10A | | U,V | | 06 |
| * | R130 | **V3277100** | AC Cord | E H05VV-F3X0.7510A | | H,W | | |
| | R130 | **VV058300** | AC Cord | BS H05VV-F3X0.75 | | B | | 08 |
| | R130 | **VV058200** | AC Cord | E H05VV-F3X0.75 6A | | A | | 06 |
| | R140 | **VV103100** | Cord Strain Relief | SR-6P1 | | | | 01 |
| | R150 | **EG340190** | Bind Head Tapping Screw-B | 4.0X8 MFZN2BL | | | 6 | 01 |
| | R170 | **VU859000** | Power Switch Knob | SR200 | | POWER ON/OFF | | 01 |
| | R190 | **EG340360** | Bind Head Screw | 4.0X8 MFZN2BL | | U,V,H,W,B | | 01 |
| | R200 | -- | Switch Bracket | | | (V319280) | | |
| | R210 | **VN413300** | Bonding Tapping Screw-B | 3.0X8 MFZN2BL | | | 3 | 01 |

✻: New Parts

RANK : Japan only



Downloaded from www.Manualslib.com manuals search engine

## ELECTRICAL PARTS

| | REF NO. | PART NO. | DESCRIPTION | | | REMARKS | QTY | RANK |
|---|---|---|---|---|---|---|---|---|
| | | | ELECTRICAL PARTS | | | EMX860ST | | |
| * | | **V2952400** | Circuit Board | MIX | | (XV182C0) | | |
| | | **NX820610** | Circuit Board | PWR J | | J (XV183B0) | | |
| | | **NX820620** | Circuit Board | PWR U | | U,V (XV183B0) | | |
| | | **NX820630** | Circuit Board | PWR H | | H,W,B,A (XV183B0) | | |
| | | **NX820640** | Circuit Board Assembly | SP OUT | | (XV183B0) | | |
| | | **NX820650** | Circuit Board Assembly | AC | | J,U,V (XV183B0) | | |
| * | | **NX820660** | Circuit Board Assembly | AC | | H,W,B,A (XV183B0) | | |
| * | | **V2952500** | Circuit Board | SUB | | (XV184C0) | | |
| | | | | | | | | |
| * | | **V2952400** | Circuit Board | MIX | | (XV182C0) | | |
| | | **--** | Jumper Wire | 0.6 | | (VV29140) | | 01 |
| | | **VU860700** | Button | CD-GRAY/WHITE | | VOCAL,L HALL,S HALL,ON | 4 | 01 |
| | | **VV307300** | LED Spacer | SR200 | | | 19 | 01 |
| | | **VZ968600** | Button | CD-GRAY | | PAD(1to6) | 6 | 01 |
| | C101 | **UJ867470** | Electrolytic Cap. | 47.00 50.0V | | | | 01 |
| | C102 | **UJ867470** | Electrolytic Cap. | 47.00 50.0V | | | | 01 |
| | C103 | **VV488800** | Electrolytic Cap. | 10.00 50.0V | | | | 01 |
| | -106 | **VV488800** | Electrolytic Cap. | 10.00 50.0V | | | | 01 |
| | C107 | **UJ847100** | Electrolytic Cap. | 10.00 25.0V | | | | 01 |
| | -110 | **UJ847100** | Electrolytic Cap. | 10.00 25.0V | | | | 01 |
| | C111 | **VZ353800** | Ceramic Cap.-B | 470P 50V K | | | | 01 |
| | -116 | **VZ353800** | Ceramic Cap.-B | 470P 50V K | | | | 01 |
| | C117 | **VV330700** | Electrolytic Cap. | 470.00 10.0V | | | | 01 |
| | C118 | **VV330700** | Electrolytic Cap. | 470.00 10.0V | | | | 01 |
| | C119 | **VZ353800** | Ceramic Cap.-B | 470P 50V K | | | | 01 |
| | C120 | **VZ353800** | Ceramic Cap.-B | 470P 50V K | | | | 01 |
| | C121 | **VZ353500** | Ceramic Capacitor-SL | 100P 50V J | | | | 01 |
| | -126 | **VZ353500** | Ceramic Capacitor-SL | 100P 50V J | | | | 01 |
| | C127 | **UJ847100** | Electrolytic Cap. | 10.00 25.0V | | | | 01 |
| | C128 | **UJ847100** | Electrolytic Cap. | 10.00 25.0V | | | | 01 |
| | C129 | **VV061800** | Mylar Capacitor | 0.015 50V J | | | | 01 |
| | C130 | **VV061400** | Mylar Capacitor | 0.01 50V J | | | | 01 |
| | C131 | **VV061800** | Mylar Capacitor | 0.015 50V J | | | | 01 |
| | C132 | **VV061400** | Mylar Capacitor | 0.01 50V J | | | | 01 |
| | C133 | **VV061500** | Mylar Capacitor | 0.012 50V J | | | | 01 |
| | C134 | **VV060800** | Mylar Capacitor | 3900P 50V J | | | | 01 |
| | C135 | **VV061500** | Mylar Capacitor | 0.012 50V J | | | | 01 |
| | C136 | **VV060800** | Mylar Capacitor | 3900P 50V J | | | | 01 |
| | C137 | **VZ352900** | Ceramic Capacitor-SL | 27P 50V J | | | | 01 |
| | C138 | **VZ353500** | Ceramic Capacitor-SL | 100P 50V J | | | | 01 |
| | C139 | **VZ352900** | Ceramic Capacitor-SL | 27P 50V J | | | | 01 |
| | C140 | **VZ353500** | Ceramic Capacitor-SL | 100P 50V J | | | | 01 |
| | C141 | **UJ847470** | Electrolytic Cap. | 47.00 25.0V | | | | 01 |
| | C142 | **UJ847470** | Electrolytic Cap. | 47.00 25.0V | | | | 01 |
| | C143 | **VZ353900** | Ceramic Cap.-B | 1000P 50V K | | | | 01 |
| | C144 | **VZ353900** | Ceramic Cap.-B | 1000P 50V K | | | | 01 |
| | C145 | **UJ847100** | Electrolytic Cap. | 10.00 25.0V | | | | 01 |
| | C146 | **UJ847100** | Electrolytic Cap. | 10.00 25.0V | | | | 01 |
| | C147 | **VZ353600** | Ceramic Cap.-B | 220P 50V K | | | | 01 |
| | C148 | **VZ353600** | Ceramic Cap.-B | 220P 50V K | | | | 01 |
| | C149 | **VZ353400** | Ceramic Capacitor-SL | 68P 50V J | | | | 01 |
| | C150 | **VZ353400** | Ceramic Capacitor-SL | 68P 50V J | | | | 01 |
| | C151 | **UJ847470** | Electrolytic Cap. | 47.00 25.0V | | | | 01 |
| | C152 | **UJ847470** | Electrolytic Cap. | 47.00 25.0V | | | | 01 |
| | C153 | **VZ354000** | Ceramic Capacitor-F | 0.01 50V Z | | | | 01 |
| | -158 | **VZ354000** | Ceramic Capacitor-F | 0.01 50V Z | | | | 01 |
| | C201 | **UJ867470** | Electrolytic Cap. | 47.00 50.0V | | | | 01 |
| | C202 | **UJ867470** | Electrolytic Cap. | 47.00 50.0V | | | | 01 |
| | C203 | **VV488800** | Electrolytic Cap. | 10.00 50.0V | | | | 01 |
| | -206 | **VV488800** | Electrolytic Cap. | 10.00 50.0V | | | | 01 |
| | C207 | **UJ847100** | Electrolytic Cap. | 10.00 25.0V | | | | 01 |
| | -210 | **UJ847100** | Electrolytic Cap. | 10.00 25.0V | | | | 01 |
| | C211 | **VZ353800** | Ceramic Cap.-B | 470P 50V K | | | | 01 |
| | -216 | **VZ353800** | Ceramic Cap.-B | 470P 50V K | | | | 01 |
| | C217 | **VV330700** | Electrolytic Cap. | 470.00 10.0V | | | | 01 |
| | C218 | **VV330700** | Electrolytic Cap. | 470.00 10.0V | | | | 01 |
| | C219 | **VZ353800** | Ceramic Cap.-B | 470P 50V K | | | | 01 |
| | C220 | **VZ353800** | Ceramic Cap.-B | 470P 50V K | | | | 01 |
| | C221 | **VZ353500** | Ceramic Capacitor-SL | 100P 50V J | | | | 01 |

| | REF NO. | PART NO. | DESCRIPTION | | | REMARKS | QTY | RANK |
|---|---|---|---|---|---|---|---|---|
| | -226 | **VZ353500** | Ceramic Capacitor-SL | 100P 50V J | | | | 01 |
| * | C227 | **UJ847100** | Electrolytic Cap. | 10.00 25.0V | | | | 01 |
| | C228 | **UJ847100** | Electrolytic Cap. | 10.00 25.0V | | | | 01 |
| | C229 | **VV061800** | Mylar Capacitor | 0.015 50V J | | | | 01 |
| | C230 | **VV061400** | Mylar Capacitor | 0.01 50V J | | | | 01 |
| | C231 | **VV061800** | Mylar Capacitor | 0.015 50V J | | | | 01 |
| | C232 | **VV061400** | Mylar Capacitor | 0.01 50V J | | | | 01 |
| * | C233 | **VV061500** | Mylar Capacitor | 0.012 50V J | | | | 01 |
| * | C234 | **VV060800** | Mylar Capacitor | 3900P 50V J | | | | 01 |
| | C235 | **VV061500** | Mylar Capacitor | 0.012 50V J | | | | 01 |
| * | C236 | **VV060800** | Mylar Capacitor | 3900P 50V J | | | | 01 |
| | C237 | **VZ352900** | Ceramic Capacitor-SL | 27P 50V J | | | | 01 |
| | C238 | **VZ353500** | Ceramic Capacitor-SL | 100P 50V J | | | | 01 |
| | C239 | **VZ352900** | Ceramic Capacitor-SL | 27P 50V J | | | | 01 |
| | C240 | **VZ353500** | Ceramic Capacitor-SL | 100P 50V J | | | | 01 |
| | C241 | **UJ847470** | Electrolytic Cap. | 47.00 25.0V | | | | 01 |
| | C242 | **UJ847470** | Electrolytic Cap. | 47.00 25.0V | | | | 01 |
| | C243 | **VZ353900** | Ceramic Cap.-B | 1000P 50V K | | | | 01 |
| | C244 | **VZ353900** | Ceramic Cap.-B | 1000P 50V K | | | | 01 |
| | C245 | **UJ847100** | Electrolytic Cap. | 10.00 25.0V | | | | 01 |
| | C246 | **UJ847100** | Electrolytic Cap. | 10.00 25.0V | | | | 01 |
| | C247 | **VZ353600** | Ceramic Cap.-B | 220P 50V K | | | | 01 |
| | C248 | **VZ353600** | Ceramic Cap.-B | 220P 50V K | | | | 01 |
| | C249 | **VZ353400** | Ceramic Capacitor-SL | 68P 50V J | | | | 01 |
| | C250 | **VZ353400** | Ceramic Capacitor-SL | 68P 50V J | | | | 01 |
| | C251 | **UJ847470** | Electrolytic Cap. | 47.00 25.0V | | | | 01 |
| | C252 | **UJ847470** | Electrolytic Cap. | 47.00 25.0V | | | | 01 |
| | C253 | **VZ354000** | Ceramic Capacitor-F | 0.01 50V Z | | | | 01 |
| | -258 | **VZ354000** | Ceramic Capacitor-F | 0.01 50V Z | | | | 01 |
| | C301 | **UJ867470** | Electrolytic Cap. | 47.00 50.0V | | | | 01 |
| | C302 | **UJ867470** | Electrolytic Cap. | 47.00 50.0V | | | | 01 |
| | C303 | **VV488800** | Electrolytic Cap. | 10.00 50.0V | | | | 01 |
| | -306 | **VV488800** | Electrolytic Cap. | 10.00 50.0V | | | | 01 |
| | C307 | **UJ847100** | Electrolytic Cap. | 10.00 25.0V | | | | 01 |
| | -310 | **UJ847100** | Electrolytic Cap. | 10.00 25.0V | | | | 01 |
| | C311 | **VZ353800** | Ceramic Cap.-B | 470P 50V K | | | | 01 |
| | -316 | **VZ353800** | Ceramic Cap.-B | 470P 50V K | | | | 01 |
| | C317 | **VV330700** | Electrolytic Cap. | 470.00 10.0V | | | | 01 |
| | C318 | **VV330700** | Electrolytic Cap. | 470.00 10.0V | | | | 01 |
| | C319 | **VZ353800** | Ceramic Cap.-B | 470P 50V K | | | | 01 |
| | C320 | **VZ353800** | Ceramic Cap.-B | 470P 50V K | | | | 01 |
| | C321 | **VZ353500** | Ceramic Capacitor-SL | 100P 50V J | | | | 01 |
| | -326 | **VZ353500** | Ceramic Capacitor-SL | 100P 50V J | | | | 01 |
| | C327 | **UJ847100** | Electrolytic Cap. | 10.00 25.0V | | | | 01 |
| | C328 | **UJ847100** | Electrolytic Cap. | 10.00 25.0V | | | | 01 |
| | C329 | **VV061800** | Mylar Capacitor | 0.015 50V J | | | | 01 |
| | C330 | **VV061400** | Mylar Capacitor | 0.01 50V J | | | | 01 |
| | C331 | **VV061800** | Mylar Capacitor | 0.015 50V J | | | | 01 |
| | C332 | **VV061400** | Mylar Capacitor | 0.01 50V J | | | | 01 |
| | C333 | **VV061500** | Mylar Capacitor | 0.012 50V J | | | | 01 |
| | C334 | **VV060800** | Mylar Capacitor | 3900P 50V J | | | | 01 |
| | C335 | **VV061500** | Mylar Capacitor | 0.012 50V J | | | | 01 |
| | C336 | **VV060800** | Mylar Capacitor | 3900P 50V J | | | | 01 |
| | C337 | **VZ352900** | Ceramic Capacitor-SL | 27P 50V J | | | | 01 |
| | C338 | **VZ353500** | Ceramic Capacitor-SL | 100P 50V J | | | | 01 |
| | C339 | **VZ352900** | Ceramic Capacitor-SL | 27P 50V J | | | | 01 |
| | C340 | **VZ353500** | Ceramic Capacitor-SL | 100P 50V J | | | | 01 |
| | C341 | **UJ847470** | Electrolytic Cap. | 47.00 25.0V | | | | 01 |
| | C342 | **UJ847470** | Electrolytic Cap. | 47.00 25.0V | | | | 01 |
| | C343 | **VZ353900** | Ceramic Cap.-B | 1000P 50V K | | | | 01 |
| | C344 | **VZ353900** | Ceramic Cap.-B | 1000P 50V K | | | | 01 |
| | C345 | **UJ847100** | Electrolytic Cap. | 10.00 25.0V | | | | 01 |
| | C346 | **UJ847100** | Electrolytic Cap. | 10.00 25.0V | | | | 01 |
| | C347 | **VZ353600** | Ceramic Cap.-B | 220P 50V K | | | | 01 |
| | C348 | **VZ353600** | Ceramic Cap.-B | 220P 50V K | | | | 01 |
| | C349 | **VZ353400** | Ceramic Capacitor-SL | 68P 50V J | | | | 01 |
| | C350 | **VZ353400** | Ceramic Capacitor-SL | 68P 50V J | | | | 01 |
| | C351 | **UJ847470** | Electrolytic Cap. | 47.00 25.0V | | | | 01 |
| | C352 | **UJ847470** | Electrolytic Cap. | 47.00 25.0V | | | | 01 |
| | C353 | **VZ354000** | Ceramic Capacitor-F | 0.01 50V Z | | | | 01 |

✻ : New Parts

RANK : Japan only



Downloaded from www.Manualslib.com manuals search engine

| REF NO. | PART NO. | DESCRIPTION | | | REMARKS | QTY | RANK |
|---|---|---|---|---|---|---|---|
| -358 | **VZ354000** | Ceramic Capacitor-F | 0.01 50V Z | | | | 01 |
| C401 | **UJ867470** | Electrolytic Cap. | 47.00 50.0V | | | | 01 |
| C402 | **VV488800** | Electrolytic Cap. | 10.00 50.0V | | | | 01 |
| C403 | **VV488800** | Electrolytic Cap. | 10.00 50.0V | | | | 01 |
| C404 | **UJ847100** | Electrolytic Cap. | 10.00 25.0V | | | | 01 |
| C405 | **UJ847100** | Electrolytic Cap. | 10.00 25.0V | | | | 01 |
| C406 | **VZ353800** | Ceramic Cap.-B | 470P 50V K | | | | 01 |
| -408 | **VZ353800** | Ceramic Cap.-B | 470P 50V K | | | | 01 |
| C409 | **VV330700** | Electrolytic Cap. | 470.00 10.0V | | | | 01 |
| C410 | **VZ353800** | Ceramic Cap.-B | 470P 50V K | | | | 01 |
| C411 | **VZ353500** | Ceramic Capacitor-SL | 100P 50V J | | | | 01 |
| -413 | **VZ353500** | Ceramic Capacitor-SL | 100P 50V J | | | | 01 |
| C414 | **UJ847100** | Electrolytic Cap. | 10.00 25.0V | | | | 01 |
| C415 | **VZ353500** | Ceramic Capacitor-SL | 100P 50V J | | | | 01 |
| C416 | **VZ353500** | Ceramic Capacitor-SL | 100P 50V J | | | | 01 |
| C417 | **VZ353400** | Ceramic Capacitor-SL | 68P 50V J | | | | 01 |
| C418 | **VZ353400** | Ceramic Capacitor-SL | 68P 50V J | | | | 01 |
| C419 | **UJ847100** | Electrolytic Cap. | 10.00 25.0V | | | | 01 |
| C420 | **UJ847100** | Electrolytic Cap. | 10.00 25.0V | | | | 01 |
| C421 | **VV061400** | Mylar Capacitor | 0.01 50V J | | | | 01 |
| C422 | **VV061500** | Mylar Capacitor | 0.012 50V J | | | | 01 |
| C423 | **VV061800** | Mylar Capacitor | 0.015 50V J | | | | 01 |
| C424 | **VV061400** | Mylar Capacitor | 0.01 50V J | | | | 01 |
| C425 | **VV061500** | Mylar Capacitor | 0.012 50V J | | | | 01 |
| C426 | **VV061800** | Mylar Capacitor | 0.015 50V J | | | | 01 |
| C427 | **VV060800** | Mylar Capacitor | 3900P 50V J | | | | 01 |
| C428 | **VV060800** | Mylar Capacitor | 3900P 50V J | | | | 01 |
| C429 | **VZ352900** | Ceramic Capacitor-SL | 27P 50V J | | | | 01 |
| C430 | **VZ353500** | Ceramic Capacitor-SL | 100P 50V J | | | | 01 |
| C431 | **VZ352900** | Ceramic Capacitor-SL | 27P 50V J | | | | 01 |
| C432 | **VZ353500** | Ceramic Capacitor-SL | 100P 50V J | | | | 01 |
| C433 | **UJ847470** | Electrolytic Cap. | 47.00 25.0V | | | | 01 |
| C434 | **UJ847470** | Electrolytic Cap. | 47.00 25.0V | | | | 01 |
| C435 | **VZ353900** | Ceramic Cap.-B | 1000P 50V K | | | | 01 |
| C436 | **VZ353900** | Ceramic Cap.-B | 1000P 50V K | | | | 01 |
| C437 | **UJ847100** | Electrolytic Cap. | 10.00 25.0V | | | | 01 |
| C438 | **UJ847100** | Electrolytic Cap. | 10.00 25.0V | | | | 01 |
| C439 | **VZ353600** | Ceramic Cap.-B | 220P 50V K | | | | 01 |
| C440 | **VZ353600** | Ceramic Cap.-B | 220P 50V K | | | | 01 |
| C441 | **VZ353400** | Ceramic Capacitor-SL | 68P 50V J | | | | 01 |
| C442 | **VZ353400** | Ceramic Capacitor-SL | 68P 50V J | | | | 01 |
| C443 | **UJ847470** | Electrolytic Cap. | 47.00 25.0V | | | | 01 |
| C444 | **UJ847470** | Electrolytic Cap. | 47.00 25.0V | | | | 01 |
| C501 | **UJ867470** | Electrolytic Cap. | 47.00 50.0V | | | | 01 |
| C502 | **VV488800** | Electrolytic Cap. | 10.00 50.0V | | | | 01 |
| C503 | **VV488800** | Electrolytic Cap. | 10.00 50.0V | | | | 01 |
| C504 | **UJ847100** | Electrolytic Cap. | 10.00 25.0V | | | | 01 |
| C505 | **UJ847100** | Electrolytic Cap. | 10.00 25.0V | | | | 01 |
| C506 | **VZ354000** | Ceramic Capacitor-F | 0.01 50V Z | | | | 01 |
| C507 | **VZ353800** | Ceramic Cap.-B | 470P 50V K | | | | 01 |
| C508 | **VZ353800** | Ceramic Cap.-B | 470P 50V K | | | | 01 |
| C509 | **VZ354000** | Ceramic Capacitor-F | 0.01 50V Z | | | | 01 |
| C510 | **VZ353800** | Ceramic Cap.-B | 470P 50V K | | | | 01 |
| C511 | **VZ354000** | Ceramic Capacitor-F | 0.01 50V Z | | | | 01 |
| C512 | **VV330700** | Electrolytic Cap. | 470.00 10.0V | | | | 01 |
| C513 | **VZ353800** | Ceramic Cap.-B | 470P 50V K | | | | 01 |
| C514 | **VZ354000** | Ceramic Capacitor-F | 0.01 50V Z | | | | 01 |
| C515 | **VZ353500** | Ceramic Capacitor-SL | 100P 50V J | | | | 01 |
| -517 | **VZ353500** | Ceramic Capacitor-SL | 100P 50V J | | | | 01 |
| C518 | **VZ354000** | Ceramic Capacitor-F | 0.01 50V Z | | | | 01 |
| C519 | **UJ847100** | Electrolytic Cap. | 10.00 25.0V | | | | 01 |
| C520 | **VZ354000** | Ceramic Capacitor-F | 0.01 50V Z | | | | 01 |
| C521 | **VZ353500** | Ceramic Capacitor-SL | 100P 50V J | | | | 01 |
| C522 | **VZ353500** | Ceramic Capacitor-SL | 100P 50V J | | | | 01 |
| C523 | **VZ354000** | Ceramic Capacitor-F | 0.01 50V Z | | | | 01 |
| C524 | **VZ353400** | Ceramic Capacitor-SL | 68P 50V J | | | | 01 |
| C525 | **VZ353400** | Ceramic Capacitor-SL | 68P 50V J | | | | 01 |
| C526 | **VZ354000** | Ceramic Capacitor-F | 0.01 50V Z | | | | 01 |
| C527 | **UJ847100** | Electrolytic Cap. | 10.00 25.0V | | | | 01 |
| C528 | **UJ847100** | Electrolytic Cap. | 10.00 25.0V | | | | 01 |

✻: New Parts

RANK : Japan only



Downloaded from www.Manualslib.com manuals search engine

| REF NO. | PART NO. | DESCRIPTION | | | REMARKS | QTY | RANK |
|---|---|---|---|---|---|---|---|
| C529 | **VZ354000** | Ceramic Capacitor-F | 0.01 50V Z | | | | 01 |
| C530 | **VZ354000** | Ceramic Capacitor-F | 0.01 50V Z | | | | 01 |
| C531 | **VV061400** | Mylar Capacitor | 0.01 50V J | | | | 01 |
| C532 | **VV061500** | Mylar Capacitor | 0.012 50V J | | | | 01 |
| C533 | **VV061800** | Mylar Capacitor | 0.015 50V J | | | | 01 |
| C534 | **VV061400** | Mylar Capacitor | 0.01 50V J | | | | 01 |
| C535 | **VV061500** | Mylar Capacitor | 0.012 50V J | | | | 01 |
| C536 | **VV061800** | Mylar Capacitor | 0.015 50V J | | | | 01 |
| C537 | **VZ354000** | Ceramic Capacitor-F | 0.01 50V Z | | | | 01 |
| C538 | **VV060800** | Mylar Capacitor | 3900P 50V J | | | | 01 |
| C539 | **VV060800** | Mylar Capacitor | 3900P 50V J | | | | 01 |
| C540 | **VZ352900** | Ceramic Capacitor-SL | 27P 50V J | | | | 01 |
| C541 | **VZ353500** | Ceramic Capacitor-SL | 100P 50V J | | | | 01 |
| C542 | **VZ352900** | Ceramic Capacitor-SL | 27P 50V J | | | | 01 |
| C543 | **VZ353500** | Ceramic Capacitor-SL | 100P 50V J | | | | 01 |
| C544 | **VZ354000** | Ceramic Capacitor-F | 0.01 50V Z | | | | 01 |
| C545 | **VZ354000** | Ceramic Capacitor-F | 0.01 50V Z | | | | 01 |
| C546 | **UJ847470** | Electrolytic Cap. | 47.00 25.0V | | | | 01 |
| C547 | **UJ847470** | Electrolytic Cap. | 47.00 25.0V | | | | 01 |
| C548 | **VZ354000** | Ceramic Capacitor-F | 0.01 50V Z | | | | 01 |
| C549 | **VZ353900** | Ceramic Cap.-B | 1000P 50V K | | | | 01 |
| C550 | **VZ353900** | Ceramic Cap.-B | 1000P 50V K | | | | 01 |
| C551 | **UJ847100** | Electrolytic Cap. | 10.00 25.0V | | | | 01 |
| C552 | **UJ847100** | Electrolytic Cap. | 10.00 25.0V | | | | 01 |
| C553 | **VZ353600** | Ceramic Cap.-B | 220P 50V K | | | | 01 |
| C554 | **VZ353600** | Ceramic Cap.-B | 220P 50V K | | | | 01 |
| C555 | **VZ353400** | Ceramic Capacitor-SL | 68P 50V J | | | | 01 |
| C556 | **VZ353400** | Ceramic Capacitor-SL | 68P 50V J | | | | 01 |
| C557 | **UJ847470** | Electrolytic Cap. | 47.00 25.0V | | | | 01 |
| C558 | **UJ847470** | Electrolytic Cap. | 47.00 25.0V | | | | 01 |
| C601 | **VV064400** | Monolithic Mylar Capacitor | 0.82 50V J | | | | 03 |
| C602 | **VV064100** | Monolithic Mylar Capacitor | 0.47 50V J | | | | 02 |
| C603 | **VV321100** | Monolithic Mylar Capacitor | 0.22 50V J | | | | 01 |
| C604 | **VV062800** | Mylar Capacitor | 0.1 50V J | | | | 01 |
| C605 | **VV062400** | Mylar Capacitor | 0.047 50V J | | | | 01 |
| C606 | **VV062100** | Mylar Capacitor | 0.027 50V J | | | | 01 |
| C607 | **VV061500** | Mylar Capacitor | 0.012 50V J | | | | 01 |
| C608 | **VV064400** | Monolithic Mylar Capacitor | 0.82 50V J | | | | 03 |
| C609 | **VV064100** | Monolithic Mylar Capacitor | 0.47 50V J | | | | 02 |
| C610 | **VV321100** | Monolithic Mylar Capacitor | 0.22 50V J | | | | 01 |
| C611 | **VV062800** | Mylar Capacitor | 0.1 50V J | | | | 01 |
| C612 | **VV062400** | Mylar Capacitor | 0.047 50V J | | | | 01 |
| C613 | **VV062100** | Mylar Capacitor | 0.027 50V J | | | | 01 |
| C614 | **VV061500** | Mylar Capacitor | 0.012 50V J | | | | 01 |
| C615 | **VV062700** | Mylar Capacitor | 0.082 50V J | | | | 01 |
| C616 | **VV062300** | Mylar Capacitor | 0.039 50V J | | | | 01 |
| C617 | **VV061900** | Mylar Capacitor | 0.018 50V J | | | | 01 |
| C618 | **VV061400** | Mylar Capacitor | 0.01 50V J | | | | 01 |
| C619 | **VV060900** | Mylar Capacitor | 4700P 50V J | | | | 01 |
| C620 | **VV060300** | Mylar Capacitor | 2200P 50V J | | | | 01 |
| C621 | **VV060000** | Mylar Capacitor | 1200P 50V J | | | | 01 |
| C622 | **VV062700** | Mylar Capacitor | 0.082 50V J | | | | 01 |
| C623 | **VV062300** | Mylar Capacitor | 0.039 50V J | | | | 01 |
| C624 | **VV061900** | Mylar Capacitor | 0.018 50V J | | | | 01 |
| C625 | **VV061400** | Mylar Capacitor | 0.01 50V J | | | | 01 |
| C626 | **VV060900** | Mylar Capacitor | 4700P 50V J | | | | 01 |
| C627 | **VV060300** | Mylar Capacitor | 2200P 50V J | | | | 01 |
| C628 | **VV060000** | Mylar Capacitor | 1200P 50V J | | | | 01 |
| C629 | **VZ354000** | Ceramic Capacitor-F | 0.01 50V Z | | | | 01 |
| C630 | **VZ354000** | Ceramic Capacitor-F | 0.01 50V Z | | | | 01 |
| C631 | **VZ353800** | Ceramic Cap.-B | 470P 50V K | | | | 01 |
| C632 | **VZ353800** | Ceramic Cap.-B | 470P 50V K | | | | 01 |
| C633 | **VZ354000** | Ceramic Capacitor-F | 0.01 50V Z | | | | 01 |
| C634 | **VZ354000** | Ceramic Capacitor-F | 0.01 50V Z | | | | 01 |
| C635 | **UJ847470** | Electrolytic Cap. | 47.00 25.0V | | | | 01 |
| C636 | **UJ847470** | Electrolytic Cap. | 47.00 25.0V | | | | 01 |
| C638 | **UJ847100** | Electrolytic Cap. | 10.00 25.0V | | | | 01 |
| C639 | **UJ847100** | Electrolytic Cap. | 10.00 25.0V | | | | 01 |
| C641 | **UJ847100** | Electrolytic Cap. | 10.00 25.0V | | | | 01 |
| C642 | **VZ353500** | Ceramic Capacitor-SL | 100P 50V J | | | | 01 |

✻: New Parts

RANK : Japan only



Downloaded from www.Manualslib.com manuals search engine

| REF NO. | PART NO. | DESCRIPTION | | | REMARKS | QTY | RANK |
|---|---|---|---|---|---|---|---|
| C643 | **VZ353500** | Ceramic Capacitor-SL | 100P 50V J | | | | 01 |
| C644 | **VZ353200** | Ceramic Capacitor-SL | 47P 50V J | | | | 01 |
| C645 | **VZ353200** | Ceramic Capacitor-SL | 47P 50V J | | | | 01 |
| C646 | **UJ847100** | Electrolytic Cap. | 10.00 25.0V | | | | 01 |
| C647 | **UJ847100** | Electrolytic Cap. | 10.00 25.0V | | | | 01 |
| C648 | **UJ847470** | Electrolytic Cap. | 47.00 25.0V | | | | 01 |
| C649 | **UJ847470** | Electrolytic Cap. | 47.00 25.0V | | | | 01 |
| C650 | **VZ353600** | Ceramic Cap.-B | 220P 50V K | | | | 01 |
| C651 | **VZ353600** | Ceramic Cap.-B | 220P 50V K | | | | 01 |
| C652 | **VZ353400** | Ceramic Capacitor-SL | 68P 50V J | | | | 01 |
| C653 | **VZ353400** | Ceramic Capacitor-SL | 68P 50V J | | | | 01 |
| C654 | **UJ847470** | Electrolytic Cap. | 47.00 25.0V | | | | 01 |
| C655 | **UJ847470** | Electrolytic Cap. | 47.00 25.0V | | | | 01 |
| C656 | **VZ354000** | Ceramic Capacitor-F | 0.01 50V Z | | | | 01 |
| -659 | **VZ354000** | Ceramic Capacitor-F | 0.01 50V Z | | | | 01 |
| C660 | **UJ847470** | Electrolytic Cap. | 47.00 25.0V | | | | 01 |
| C661 | **UJ847470** | Electrolytic Cap. | 47.00 25.0V | | | | 01 |
| C701 | **VV064400** | Monolithic Mylar Capacitor | 0.82 50V J | | | | 03 |
| C702 | **VV064100** | Monolithic Mylar Capacitor | 0.47 50V J | | | | 02 |
| C703 | **VV321100** | Monolithic Mylar Capacitor | 0.22 50V J | | | | 01 |
| C704 | **VV062800** | Mylar Capacitor | 0.1 50V J | | | | 01 |
| C705 | **VV062400** | Mylar Capacitor | 0.047 50V J | | | | 01 |
| C706 | **VV062100** | Mylar Capacitor | 0.027 50V J | | | | 01 |
| C707 | **VV061500** | Mylar Capacitor | 0.012 50V J | | | | 01 |
| C708 | **VV062700** | Mylar Capacitor | 0.082 50V J | | | | 01 |
| C709 | **VV062300** | Mylar Capacitor | 0.039 50V J | | | | 01 |
| C710 | **VV061900** | Mylar Capacitor | 0.018 50V J | | | | 01 |
| C711 | **VV061400** | Mylar Capacitor | 0.01 50V J | | | | 01 |
| C712 | **VV060900** | Mylar Capacitor | 4700P 50V J | | | | 01 |
| C713 | **VV060300** | Mylar Capacitor | 2200P 50V J | | | | 01 |
| C714 | **VV060000** | Mylar Capacitor | 1200P 50V J | | | | 01 |
| C715 | **VZ354000** | Ceramic Capacitor-F | 0.01 50V Z | | | | 01 |
| C716 | **VZ353800** | Ceramic Cap.-B | 470P 50V K | | | | 01 |
| C717 | **VZ354000** | Ceramic Capacitor-F | 0.01 50V Z | | | | 01 |
| C718 | **UJ847470** | Electrolytic Cap. | 47.00 25.0V | | | | 01 |
| C719 | **VZ353900** | Ceramic Cap.-B | 1000P 50V K | | | | 01 |
| C720 | **UJ847100** | Electrolytic Cap. | 10.00 25.0V | | | | 01 |
| -722 | **UJ847100** | Electrolytic Cap. | 10.00 25.0V | | | | 01 |
| C723 | **VZ353600** | Ceramic Cap.-B | 220P 50V K | | | | 01 |
| C724 | **VZ353600** | Ceramic Cap.-B | 220P 50V K | | | | 01 |
| C725 | **VZ353400** | Ceramic Capacitor-SL | 68P 50V J | | | | 01 |
| C726 | **VZ353400** | Ceramic Capacitor-SL | 68P 50V J | | | | 01 |
| C727 | **UJ847470** | Electrolytic Cap. | 47.00 25.0V | | | | 01 |
| C728 | **UJ847470** | Electrolytic Cap. | 47.00 25.0V | | | | 01 |
| C729 | **VZ354000** | Ceramic Capacitor-F | 0.01 50V Z | | | | 01 |
| C730 | **VZ354000** | Ceramic Capacitor-F | 0.01 50V Z | | | | 01 |
| C801 | **UJ847100** | Electrolytic Cap. | 10.00 25.0V | | | | 01 |
| C802 | **UJ847100** | Electrolytic Cap. | 10.00 25.0V | | | | 01 |
| C803 | **VZ353600** | Ceramic Cap.-B | 220P 50V K | | | | 01 |
| C804 | **VZ353600** | Ceramic Cap.-B | 220P 50V K | | | | 01 |
| * C805 | **VZ352600** | Ceramic Capacitor-SL | 6P 50V J | | | | |
| * C806 | **VZ352600** | Ceramic Capacitor-SL | 6P 50V J | | | | |
| C807 | **UJ847100** | Electrolytic Cap. | 10.00 25.0V | | | | 01 |
| C808 | **UJ847100** | Electrolytic Cap. | 10.00 25.0V | | | | 01 |
| C809 | **VZ353900** | Ceramic Cap.-B | 1000P 50V K | | | | 01 |
| C810 | **VZ354000** | Ceramic Capacitor-F | 0.01 50V Z | | | | 01 |
| C811 | **VZ354000** | Ceramic Capacitor-F | 0.01 50V Z | | | | 01 |
| C812 | **VZ353600** | Ceramic Cap.-B | 220P 50V K | | | | 01 |
| CN801 | **VV067000** | Connector Base Post | M2426XX 10P TE | | | | 01 |
| CN802 | **VV066500** | Connector Base Post | M2426XX 5P TE | | | | 01 |
| CN803 | **VV067500** | Connector Base Post | M2426XX 15P TE | | | | 01 |
| EM801 | **VV056900** | Noise Filter | ZJSR5101-223TA | | | | 01 |
| IC101 | **XM356A00** | IC | NJM2068L-D | | OP AMP | | 02 |
| IC102 | **XM922A00** | IC | NJM4558L | | OP AMP | | 01 |
| IC102 | **XQ212A00** | IC | NJM4558L-D | | OP AMP | | 03 |
| IC103 | **XM922A00** | IC | NJM4558L | | OP AMP | | 01 |
| IC103 | **XQ212A00** | IC | NJM4558L-D | | OP AMP | | 03 |
| IC201 | **XM356A00** | IC | NJM2068L-D | | OP AMP | | 02 |
| IC202 | **XM922A00** | IC | NJM4558L | | OP AMP | | 01 |
| IC202 | **XQ212A00** | IC | NJM4558L-D | | OP AMP | | 03 |

❇: New Parts

RANK : Japan only



Downloaded from www.Manualslib.com manuals search engine

| REF NO. | PART NO. | DESCRIPTION | | | REMARKS | QTY | RANK |
|---|---|---|---|---|---|---|---|
| IC203 | **XM922A00** | IC | NJM4558L | | OP AMP | | 01 |
| IC203 | **XQ212A00** | IC | NJM4558L-D | | | | 03 |
| IC301 | **XM356A00** | IC | NJM2068L-D | | OP AMP | | 02 |
| IC302 | **XM922A00** | IC | NJM4558L | | OP AMP | | 01 |
| IC302 | **XQ212A00** | IC | NJM4558L-D | | | | 03 |
| IC303 | **XM922A00** | IC | NJM4558L | | OP AMP | | 01 |
| IC303 | **XQ212A00** | IC | NJM4558L-D | | | | 03 |
| IC401 | **XM356A00** | IC | NJM2068L-D | | OP AMP | | 02 |
| IC402 | **XM922A00** | IC | NJM4558L | | OP AMP | | 01 |
| IC402 | **XQ212A00** | IC | NJM4558L-D | | | | 03 |
| IC403 | **XM922A00** | IC | NJM4558L | | OP AMP | | 01 |
| IC403 | **XQ212A00** | IC | NJM4558L-D | | | | 03 |
| IC404 | **XM356A00** | IC | NJM2068L-D | | OP AMP | | 02 |
| IC501 | **XM356A00** | IC | NJM2068L-D | | OP AMP | | 02 |
| IC502 | **XM922A00** | IC | NJM4558L | | OP AMP | | 01 |
| IC502 | **XQ212A00** | IC | NJM4558L-D | | | | 03 |
| IC503 | **XM922A00** | IC | NJM4558L | | OP AMP | | 01 |
| IC503 | **XQ212A00** | IC | NJM4558L-D | | | | 03 |
| IC601 | **XG203A00** | IC | M5229P | | G.EQUALIZER | | 04 |
| IC602 | **XG203A00** | IC | M5229P | | G.EQUALIZER | | 04 |
| IC603 | **XA534A00** | IC | BA6137 | | LED DRIVER | | 03 |
| IC604 | **XA534A00** | IC | BA6137 | | LED DRIVER | | 03 |
| IC605 | **XM356A00** | IC | NJM2068L-D | | OP AMP | | 02 |
| IC606 | **XM356A00** | IC | NJM2068L-D | | OP AMP | | 02 |
| IC701 | **XG203A00** | IC | M5229P | | G.EQUALIZER | | 04 |
| IC702 | **XA534A00** | IC | BA6137 | | LED DRIVER | | 03 |
| IC703 | **XM356A00** | IC | NJM2068L-D | | OP AMP | | 02 |
| IC704 | **XM356A00** | IC | NJM2068L-D | | OP AMP | | 02 |
| JK101 | **VU805200** | XLM Connector | XLR NC3FAV1-0 | | 1ch(Lo-Z) | | 04 |
| JK102 | **VU805200** | XLM Connector | XLR NC3FAV1-0 | | 2ch(Lo-Z) | | 04 |
| JK103 | **V2954500** | Phone Jack | LJ-0695-4R-A | | 1ch(Hi-Z) | | |
| JK104 | **V2954500** | Phone Jack | LJ-0695-4R-A | | 2ch(Hi-Z) | | |
| JK201 | **VU805200** | XLM Connector | XLR NC3FAV1-0 | | 3ch(Lo-Z) | | 04 |
| JK202 | **VU805200** | XLM Connector | XLR NC3FAV1-0 | | 4ch(Lo-Z) | | 04 |
| JK203 | **V2954500** | Phone Jack | LJ-0695-4R-A | | 3ch(Hi-Z) | | |
| JK204 | **V2954500** | Phone Jack | LJ-0695-4R-A | | 4ch(Hi-Z) | | |
| JK301 | **VU805200** | XLM Connector | XLR NC3FAV1-0 | | 5ch(Lo-Z) | | 04 |
| JK302 | **VU805200** | XLM Connector | XLR NC3FAV1-0 | | 6ch(Lo-Z) | | 04 |
| JK303 | **V2954500** | Phone Jack | LJ-0695-4R-A | | 5ch(Hi-Z) | | |
| JK304 | **V2954500** | Phone Jack | LJ-0695-4R-A | | 6ch(Hi-Z) | | |
| JK401 | **VU805200** | XLM Connector | XLR NC3FAV1-0 | | 7ch(MIC) | | 04 |
| JK402 | **V2954500** | Phone Jack | LJ-0695-4R-A | | 7ch(LINE-L(MONO)) | | |
| JK403 | **V2954500** | Phone Jack | LJ-0695-4R-A | | 7ch(LINE-R) | | |
| JK501 | **VU805200** | XLM Connector | XLR NC3FAV1-0 | | 8ch(MIC) | | 04 |
| JK502 | **V2954500** | Phone Jack | LJ-0695-4R-A | | 8ch(LINE-L(MONO)) | | |
| JK503 | **V2954500** | Phone Jack | LJ-0695-4R-A | | 8ch(LINE-R) | | |
| JK601 | **V2954500** | Phone Jack | LJ-0695-4R-A | | OUTPUT(MAIN(STEREO)-L) | | |
| JK602 | **V2954500** | Phone Jack | LJ-0695-4R-A | | OUTPUT(MAIN(STEREO)-R) | | |
| JK701 | **V2954500** | Phone Jack | LJ-0695-4R-A | | OUTPUT(MONITOR) | | |
| JK702 | **V2954500** | Phone Jack | LJ-0695-4R-A | | EFFECT OUT | | |
| JK801 | **V2954500** | Phone Jack | LJ-0695-4R-A | | AUX IN-L(MONO) | | |
| JK802 | **V2954500** | Phone Jack | LJ-0695-4R-A | | AUX IN-R | | |
| JK803 | **VZ358700** | Pin Jack | PIN JK040057DN | | TAPE IN(L,R),REC OUT(L,R) | | 02 |
| JK804 | **V2954500** | Phone Jack | LJ-0695-4R-A | | FOOT SW | | |
| LD601 | **VV938100** | LED | LT331-41-C13 YE | | MASTER(STEREO) | | 01 |
| -603 | **VV938100** | LED | LT331-41-C13 YE | | (MASTER-L,+6,+3,0) | | 01 |
| LD604 | **VV621000** | LED | LT321-41-C13 GR | | MASTER(STEREO) | | 01 |
| | | | | | (MASTER-L -5) | | 01 |
| LD605 | **VV621000** | LED | LT321-41-C13 GR | | MASTER(STEREO) | | 01 |
| | | | | | (MASTER-L -10) | | 01 |
| LD606 | **VV938100** | LED | LT331-41-C13 YE | | MASTER(STEREO) | | 01 |
| -608 | **VV938100** | LED | LT331-41-C13 YE | | (MASTER-R,+6,+3,0) | | 01 |
| LD609 | **VV621000** | LED | LT321-41-C13 GR | | MASTER(STEREO) | | 01 |
| | | | | | (MASTER-R -5) | | 01 |
| LD610 | **VV621000** | LED | LT321-41-C13 GR | | MASTER(STEREO) | | 01 |
| | | | | | (MASTER-L -10) | | 01 |
| LD701 | **VV938100** | LED | LT331-41-C13 YE | | MONITOR(MASTER +6,+3,0) | | 01 |
| -703 | **VV938100** | LED | LT331-41-C13 YE | | | | 01 |
| LD704 | **VV621000** | LED | LT321-41-C13 GR | | MONITOR(MASTER -5) | | 01 |
| LD705 | **VV621000** | LED | LT321-41-C13 GR | | MONITOR(MASTER -10) | | 01 |

✻: New Parts

RANK : Japan only



Downloaded from www.Manualslib.com manuals search engine

| REF NO. | PART NO. | DESCRIPTION | | | REMARKS | QTY | RANK |
|---|---|---|---|---|---|---|---|
| LD801 | **VV620800** | LED | LT311G-41-C13 RE | | POWER AMP(LIMITER) | | 01 |
| LD802 | **VV620800** | LED | LT311G-41-C13 RE | | MONI(LIMITER) | | 01 |
| LD803 | **VV621000** | LED | LT321-41-C13 GR | | POWER | | 01 |
| LD804 | **VV620800** | LED | LT311G-41-C13 RE | | DIGITAL EFFECT(ON) | | 01 |
| Q101 | **IC224030** | Transistor | 2SC2240 GR,BL | | | | 01 |
| -104 | **IC224030** | Transistor | 2SC2240 GR,BL | | | | 01 |
| Q201 | **IC224030** | Transistor | 2SC2240 GR,BL | | | | 01 |
| -204 | **IC224030** | Transistor | 2SC2240 GR,BL | | | | 01 |
| Q301 | **IC224030** | Transistor | 2SC2240 GR,BL | | | | 01 |
| -304 | **IC224030** | Transistor | 2SC2240 GR,BL | | | | 01 |
| Q401 | **IC224030** | Transistor | 2SC2240 GR,BL | | | | 01 |
| Q402 | **IC224030** | Transistor | 2SC2240 GR,BL | | | | 01 |
| Q501 | **IC224030** | Transistor | 2SC2240 GR,BL | | | | 01 |
| Q502 | **IC224030** | Transistor | 2SC2240 GR,BL | | | | 01 |
| R101 | **HF458100** | Carbon Resistor | 100.0K 1/4 J | | | | 01 |
| -104 | **HF458100** | Carbon Resistor | 100.0K 1/4 J | | | | 01 |
| R105 | **VV065300** | Metal Film Resistor | 6.8K 1/4 F | | | | 01 |
| R106 | **VV312400** | Metal Film Resistor | 3.9K 1/4 F | | | | 01 |
| R107 | **VV065300** | Metal Film Resistor | 6.8K 1/4 F | | | | 01 |
| R108 | **VV312400** | Metal Film Resistor | 3.9K 1/4 F | | | | 01 |
| R109 | **HF458100** | Carbon Resistor | 100.0K 1/4 J | | | | 01 |
| R110 | **HF458100** | Carbon Resistor | 100.0K 1/4 J | | | | 01 |
| R111 | **VV058400** | Flame Proof C. Resistor | 390.0 1/4 J | | | | 01 |
| R112 | **VV065300** | Metal Film Resistor | 6.8K 1/4 F | | | | 01 |
| R113 | **VV058400** | Flame Proof C. Resistor | 390.0 1/4 J | | | | 01 |
| R114 | **VV065300** | Metal Film Resistor | 6.8K 1/4 F | | | | 01 |
| R115 | **VV312400** | Metal Film Resistor | 3.9K 1/4 F | | | | 01 |
| R116 | **VV312400** | Metal Film Resistor | 3.9K 1/4 F | | | | 01 |
| R117 | **HF456470** | Carbon Resistor | 4.7K 1/4 J | | | | 01 |
| R118 | **HF456470** | Carbon Resistor | 4.7K 1/4 J | | | | 01 |
| R119 | **HF454100** | Carbon Resistor | 10.0 1/4 J | | | | 01 |
| -122 | **HF454100** | Carbon Resistor | 10.0 1/4 J | | | | 01 |
| R123 | **VV066100** | Metal Film Resistor | 47K 1/4 F | | | | 01 |
| -126 | **VV066100** | Metal Film Resistor | 47K 1/4 F | | | | 01 |
| R127 | **HF454100** | Carbon Resistor | 10.0 1/4 J | | | | 01 |
| R128 | **HF454100** | Carbon Resistor | 10.0 1/4 J | | | | 01 |
| R129 | **VV065100** | Metal Film Resistor | 2.2K 1/4 F | | | | 01 |
| R130 | **VV065400** | Metal Film Resistor | 8.2K 1/4 F | | | | 01 |
| R131 | **VV065100** | Metal Film Resistor | 2.2K 1/4 F | | | | 01 |
| R132 | **VV065400** | Metal Film Resistor | 8.2K 1/4 F | | | | 01 |
| R133 | **HF456820** | Carbon Resistor | 8.2K 1/4 J | | | | 01 |
| R134 | **HF456820** | Carbon Resistor | 8.2K 1/4 J | | | | 01 |
| R135 | **HF455150** | Carbon Resistor | 150.0 1/4 J | | | | 01 |
| R136 | **HF455150** | Carbon Resistor | 150.0 1/4 J | | | | 01 |
| R137 | **VV065100** | Metal Film Resistor | 2.2K 1/4 F | | | | 01 |
| R138 | **VV065400** | Metal Film Resistor | 8.2K 1/4 F | | | | 01 |
| R139 | **VV065100** | Metal Film Resistor | 2.2K 1/4 F | | | | 01 |
| R140 | **VV065400** | Metal Film Resistor | 8.2K 1/4 F | | | | 01 |
| R141 | **HF454100** | Carbon Resistor | 10.0 1/4 J | | | | 01 |
| R142 | **HF454100** | Carbon Resistor | 10.0 1/4 J | | | | 01 |
| R143 | **HF457100** | Carbon Resistor | 10.0K 1/4 J | | | | 01 |
| -146 | **HF457100** | Carbon Resistor | 10.0K 1/4 J | | | | 01 |
| R147 | **HF457100** | Carbon Resistor | 10.0K 1/4 J | | | | 01 |
| R148 | **HF455680** | Carbon Resistor | 680.0 1/4 J | | | | 01 |
| R149 | **HF456270** | Carbon Resistor | 2.7K 1/4 J | | | | 01 |
| R150 | **HF457100** | Carbon Resistor | 10.0K 1/4 J | | | | 01 |
| R151 | **HF455680** | Carbon Resistor | 680.0 1/4 J | | | | 01 |
| R152 | **HF456270** | Carbon Resistor | 2.7K 1/4 J | | | | 01 |
| R153 | **HF457100** | Carbon Resistor | 10.0K 1/4 J | | | | 01 |
| R154 | **HF457100** | Carbon Resistor | 10.0K 1/4 J | | | | 01 |
| R155 | **HF456270** | Carbon Resistor | 2.7K 1/4 J | | | | 01 |
| R156 | **HF456270** | Carbon Resistor | 2.7K 1/4 J | | | | 01 |
| R157 | **HF457100** | Carbon Resistor | 10.0K 1/4 J | | | | 01 |
| R158 | **HF455680** | Carbon Resistor | 680.0 1/4 J | | | | 01 |
| R159 | **HF456270** | Carbon Resistor | 2.7K 1/4 J | | | | 01 |
| R160 | **HF457100** | Carbon Resistor | 10.0K 1/4 J | | | | 01 |
| R161 | **HF455680** | Carbon Resistor | 680.0 1/4 J | | | | 01 |
| R162 | **HF456270** | Carbon Resistor | 2.7K 1/4 J | | | | 01 |
| R163 | **HF454100** | Carbon Resistor | 10.0 1/4 J | | | | 01 |
| R164 | **HF454100** | Carbon Resistor | 10.0 1/4 J | | | | 01 |

✻: New Parts

RANK : Japan only



Downloaded from www.Manualslib.com manuals search engine

| REF NO. | PART NO. | DESCRIPTION | | | REMARKS | QTY | RANK |
|---|---|---|---|---|---|---|---|
| R165 | **HF457180** | Carbon Resistor | 18.0K 1/4 J | | | | 01 |
| R166 | **HF457180** | Carbon Resistor | 18.0K 1/4 J | | | | 01 |
| R167 | **HF455220** | Carbon Resistor | 220.0 1/4 J | | | | 01 |
| R168 | **HF455220** | Carbon Resistor | 220.0 1/4 J | | | | 01 |
| R169 | **HF456180** | Carbon Resistor | 1.8K 1/4 J | | | | 01 |
| R170 | **HF456180** | Carbon Resistor | 1.8K 1/4 J | | | | 01 |
| R171 | **HF457100** | Carbon Resistor | 10.0K 1/4 J | | | | 01 |
| R172 | **HF457100** | Carbon Resistor | 10.0K 1/4 J | | | | 01 |
| R173 | **HF454100** | Carbon Resistor | 10.0 1/4 J | | | | 01 |
| R174 | **HF454100** | Carbon Resistor | 10.0 1/4 J | | | | 01 |
| R175 | **HF457180** | Carbon Resistor | 18.0K 1/4 J | | | | 01 |
| -182 | **HF457180** | Carbon Resistor | 18.0K 1/4 J | | | | 01 |
| R201 | **HF458100** | Carbon Resistor | 100.0K 1/4 J | | | | 01 |
| -204 | **HF458100** | Carbon Resistor | 100.0K 1/4 J | | | | 01 |
| R205 | **VV065300** | Metal Film Resistor | 6.8K 1/4 F | | | | 01 |
| R206 | **VV312400** | Metal Film Resistor | 3.9K 1/4 F | | | | 01 |
| R207 | **VV065300** | Metal Film Resistor | 6.8K 1/4 F | | | | 01 |
| R208 | **VV312400** | Metal Film Resistor | 3.9K 1/4 F | | | | 01 |
| R209 | **HF458100** | Carbon Resistor | 100.0K 1/4 J | | | | 01 |
| R210 | **HF458100** | Carbon Resistor | 100.0K 1/4 J | | | | 01 |
| R211 | **VV058400** | Flame Proof C. Resistor | 390.0 1/4 J | | | | 01 |
| R212 | **VV065300** | Metal Film Resistor | 6.8K 1/4 F | | | | 01 |
| R213 | **VV058400** | Flame Proof C. Resistor | 390.0 1/4 J | | | | 01 |
| R214 | **VV065300** | Metal Film Resistor | 6.8K 1/4 F | | | | 01 |
| R215 | **VV312400** | Metal Film Resistor | 3.9K 1/4 F | | | | 01 |
| R216 | **VV312400** | Metal Film Resistor | 3.9K 1/4 F | | | | 01 |
| R217 | **HF456470** | Carbon Resistor | 4.7K 1/4 J | | | | 01 |
| R218 | **HF456470** | Carbon Resistor | 4.7K 1/4 J | | | | 01 |
| R219 | **HF454100** | Carbon Resistor | 10.0 1/4 J | | | | 01 |
| -222 | **HF454100** | Carbon Resistor | 10.0 1/4 J | | | | 01 |
| R223 | **VV066100** | Metal Film Resistor | 47K 1/4 F | | | | 01 |
| -226 | **VV066100** | Metal Film Resistor | 47K 1/4 F | | | | 01 |
| R227 | **HF454100** | Carbon Resistor | 10.0 1/4 J | | | | 01 |
| R228 | **HF454100** | Carbon Resistor | 10.0 1/4 J | | | | 01 |
| R229 | **VV065100** | Metal Film Resistor | 2.2K 1/4 F | | | | 01 |
| R230 | **VV065400** | Metal Film Resistor | 8.2K 1/4 F | | | | 01 |
| R231 | **VV065100** | Metal Film Resistor | 2.2K 1/4 F | | | | 01 |
| R232 | **VV065400** | Metal Film Resistor | 8.2K 1/4 F | | | | 01 |
| R233 | **HF456820** | Carbon Resistor | 8.2K 1/4 J | | | | 01 |
| R234 | **HF456820** | Carbon Resistor | 8.2K 1/4 J | | | | 01 |
| R235 | **HF455150** | Carbon Resistor | 150.0 1/4 J | | | | 01 |
| R236 | **HF455150** | Carbon Resistor | 150.0 1/4 J | | | | 01 |
| R237 | **VV065100** | Metal Film Resistor | 2.2K 1/4 F | | | | 01 |
| R238 | **VV065400** | Metal Film Resistor | 8.2K 1/4 F | | | | 01 |
| R239 | **VV065100** | Metal Film Resistor | 2.2K 1/4 F | | | | 01 |
| R240 | **VV065400** | Metal Film Resistor | 8.2K 1/4 F | | | | 01 |
| R241 | **HF454100** | Carbon Resistor | 10.0 1/4 J | | | | 01 |
| R242 | **HF454100** | Carbon Resistor | 10.0 1/4 J | | | | 01 |
| R243 | **HF457100** | Carbon Resistor | 10.0K 1/4 J | | | | 01 |
| -247 | **HF457100** | Carbon Resistor | 10.0K 1/4 J | | | | 01 |
| R248 | **HF455680** | Carbon Resistor | 680.0 1/4 J | | | | 01 |
| R249 | **HF456270** | Carbon Resistor | 2.7K 1/4 J | | | | 01 |
| R250 | **HF457100** | Carbon Resistor | 10.0K 1/4 J | | | | 01 |
| R251 | **HF455680** | Carbon Resistor | 680.0 1/4 J | | | | 01 |
| R252 | **HF456270** | Carbon Resistor | 2.7K 1/4 J | | | | 01 |
| R253 | **HF457100** | Carbon Resistor | 10.0K 1/4 J | | | | 01 |
| R254 | **HF457100** | Carbon Resistor | 10.0K 1/4 J | | | | 01 |
| R255 | **HF456270** | Carbon Resistor | 2.7K 1/4 J | | | | 01 |
| R256 | **HF456270** | Carbon Resistor | 2.7K 1/4 J | | | | 01 |
| R257 | **HF457100** | Carbon Resistor | 10.0K 1/4 J | | | | 01 |
| R258 | **HF455680** | Carbon Resistor | 680.0 1/4 J | | | | 01 |
| R259 | **HF456270** | Carbon Resistor | 2.7K 1/4 J | | | | 01 |
| R260 | **HF457100** | Carbon Resistor | 10.0K 1/4 J | | | | 01 |
| R261 | **HF455680** | Carbon Resistor | 680.0 1/4 J | | | | 01 |
| R262 | **HF456270** | Carbon Resistor | 2.7K 1/4 J | | | | 01 |
| R263 | **HF454100** | Carbon Resistor | 10.0 1/4 J | | | | 01 |
| R264 | **HF454100** | Carbon Resistor | 10.0 1/4 J | | | | 01 |
| R265 | **HF457180** | Carbon Resistor | 18.0K 1/4 J | | | | 01 |
| R266 | **HF457180** | Carbon Resistor | 18.0K 1/4 J | | | | 01 |
| R267 | **HF455220** | Carbon Resistor | 220.0 1/4 J | | | | 01 |

✻: New Parts

RANK : Japan only



Downloaded from www.Manualslib.com manuals search engine

| REF NO. | PART NO. | DESCRIPTION | | | REMARKS | QTY | RANK |
|---|---|---|---|---|---|---|---|
| R268 | **HF455220** | Carbon Resistor | 220.0 1/4 J | | | | 01 |
| R269 | **HF456180** | Carbon Resistor | 1.8K 1/4 J | | | | 01 |
| R270 | **HF456180** | Carbon Resistor | 1.8K 1/4 J | | | | 01 |
| R271 | **HF457100** | Carbon Resistor | 10.0K 1/4 J | | | | 01 |
| R272 | **HF457100** | Carbon Resistor | 10.0K 1/4 J | | | | 01 |
| R273 | **HF454100** | Carbon Resistor | 10.0 1/4 J | | | | 01 |
| R274 | **HF454100** | Carbon Resistor | 10.0 1/4 J | | | | 01 |
| R275 | **HF457180** | Carbon Resistor | 18.0K 1/4 J | | | | 01 |
| -282 | **HF457180** | Carbon Resistor | 18.0K 1/4 J | | | | 01 |
| R301 | **HF458100** | Carbon Resistor | 100.0K 1/4 J | | | | 01 |
| -304 | **HF458100** | Carbon Resistor | 100.0K 1/4 J | | | | 01 |
| R305 | **VV065300** | Metal Film Resistor | 6.8K 1/4 F | | | | 01 |
| R306 | **VV312400** | Metal Film Resistor | 3.9K 1/4 F | | | | 01 |
| R307 | **VV065300** | Metal Film Resistor | 6.8K 1/4 F | | | | 01 |
| R308 | **VV312400** | Metal Film Resistor | 3.9K 1/4 F | | | | 01 |
| R309 | **HF458100** | Carbon Resistor | 100.0K 1/4 J | | | | 01 |
| R310 | **HF458100** | Carbon Resistor | 100.0K 1/4 J | | | | 01 |
| R311 | **VV058400** | Flame Proof C. Resistor | 390.0 1/4 J | | | | 01 |
| R312 | **VV065300** | Metal Film Resistor | 6.8K 1/4 F | | | | 01 |
| R313 | **VV058400** | Flame Proof C. Resistor | 390.0 1/4 J | | | | 01 |
| R314 | **VV065300** | Metal Film Resistor | 6.8K 1/4 F | | | | 01 |
| R315 | **VV312400** | Metal Film Resistor | 3.9K 1/4 F | | | | 01 |
| R316 | **VV312400** | Metal Film Resistor | 3.9K 1/4 F | | | | 01 |
| R317 | **HF456470** | Carbon Resistor | 4.7K 1/4 J | | | | 01 |
| R318 | **HF456470** | Carbon Resistor | 4.7K 1/4 J | | | | 01 |
| R319 | **HF454100** | Carbon Resistor | 10.0 1/4 J | | | | 01 |
| -322 | **HF454100** | Carbon Resistor | 10.0 1/4 J | | | | 01 |
| R323 | **VV066100** | Metal Film Resistor | 47K 1/4 F | | | | 01 |
| -326 | **VV066100** | Metal Film Resistor | 47K 1/4 F | | | | 01 |
| R327 | **HF454100** | Carbon Resistor | 10.0 1/4 J | | | | 01 |
| R328 | **HF454100** | Carbon Resistor | 10.0 1/4 J | | | | 01 |
| R329 | **VV065100** | Metal Film Resistor | 2.2K 1/4 F | | | | 01 |
| R330 | **VV065400** | Metal Film Resistor | 8.2K 1/4 F | | | | 01 |
| R331 | **VV065100** | Metal Film Resistor | 2.2K 1/4 F | | | | 01 |
| R332 | **VV065400** | Metal Film Resistor | 8.2K 1/4 F | | | | 01 |
| R333 | **HF456820** | Carbon Resistor | 8.2K 1/4 J | | | | 01 |
| R334 | **HF456820** | Carbon Resistor | 8.2K 1/4 J | | | | 01 |
| R335 | **HF455150** | Carbon Resistor | 150.0 1/4 J | | | | 01 |
| R336 | **HF455150** | Carbon Resistor | 150.0 1/4 J | | | | 01 |
| R337 | **VV065100** | Metal Film Resistor | 2.2K 1/4 F | | | | 01 |
| R338 | **VV065400** | Metal Film Resistor | 8.2K 1/4 F | | | | 01 |
| R339 | **VV065100** | Metal Film Resistor | 2.2K 1/4 F | | | | 01 |
| R340 | **VV065400** | Metal Film Resistor | 8.2K 1/4 F | | | | 01 |
| R341 | **HF454100** | Carbon Resistor | 10.0 1/4 J | | | | 01 |
| R342 | **HF454100** | Carbon Resistor | 10.0 1/4 J | | | | 01 |
| R343 | **HF457100** | Carbon Resistor | 10.0K 1/4 J | | | | 01 |
| -347 | **HF457100** | Carbon Resistor | 10.0K 1/4 J | | | | 01 |
| R348 | **HF455680** | Carbon Resistor | 680.0 1/4 J | | | | 01 |
| R349 | **HF456270** | Carbon Resistor | 2.7K 1/4 J | | | | 01 |
| R350 | **HF457100** | Carbon Resistor | 10.0K 1/4 J | | | | 01 |
| R351 | **HF455680** | Carbon Resistor | 680.0 1/4 J | | | | 01 |
| R352 | **HF456270** | Carbon Resistor | 2.7K 1/4 J | | | | 01 |
| R353 | **HF457100** | Carbon Resistor | 10.0K 1/4 J | | | | 01 |
| R354 | **HF457100** | Carbon Resistor | 10.0K 1/4 J | | | | 01 |
| R355 | **HF456270** | Carbon Resistor | 2.7K 1/4 J | | | | 01 |
| R356 | **HF456270** | Carbon Resistor | 2.7K 1/4 J | | | | 01 |
| R357 | **HF457100** | Carbon Resistor | 10.0K 1/4 J | | | | 01 |
| R358 | **HF455680** | Carbon Resistor | 680.0 1/4 J | | | | 01 |
| R359 | **HF456270** | Carbon Resistor | 2.7K 1/4 J | | | | 01 |
| R360 | **HF457100** | Carbon Resistor | 10.0K 1/4 J | | | | 01 |
| R361 | **HF455680** | Carbon Resistor | 680.0 1/4 J | | | | 01 |
| R362 | **HF456270** | Carbon Resistor | 2.7K 1/4 J | | | | 01 |
| R363 | **HF454100** | Carbon Resistor | 10.0 1/4 J | | | | 01 |
| R364 | **HF454100** | Carbon Resistor | 10.0 1/4 J | | | | 01 |
| R365 | **HF457180** | Carbon Resistor | 18.0K 1/4 J | | | | 01 |
| R366 | **HF457180** | Carbon Resistor | 18.0K 1/4 J | | | | 01 |
| R367 | **HF455220** | Carbon Resistor | 220.0 1/4 J | | | | 01 |
| R368 | **HF455220** | Carbon Resistor | 220.0 1/4 J | | | | 01 |
| R369 | **HF456180** | Carbon Resistor | 1.8K 1/4 J | | | | 01 |
| R370 | **HF456180** | Carbon Resistor | 1.8K 1/4 J | | | | 01 |

✻: New Parts

RANK : Japan only



Downloaded from www.Manualslib.com manuals search engine

| REF NO. | PART NO. | DESCRIPTION | | | REMARKS | QTY | RANK |
|---|---|---|---|---|---|---|---|
| R371 | **HF457100** | Carbon Resistor | 10.0K 1/4 J | | | | 01 |
| R372 | **HF457100** | Carbon Resistor | 10.0K 1/4 J | | | | 01 |
| R373 | **HF454100** | Carbon Resistor | 10.0 1/4 J | | | | 01 |
| R374 | **HF454100** | Carbon Resistor | 10.0 1/4 J | | | | 01 |
| R375 | **HF457180** | Carbon Resistor | 18.0K 1/4 J | | | | 01 |
| -382 | **HF457180** | Carbon Resistor | 18.0K 1/4 J | | | | 01 |
| R401 | **HF458100** | Carbon Resistor | 100.0K 1/4 J | | | | 01 |
| R402 | **VV065300** | Metal Film Resistor | 6.8K 1/4 F | | | | 01 |
| R403 | **HF458100** | Carbon Resistor | 100.0K 1/4 J | | | | 01 |
| R404 | **HF458100** | Carbon Resistor | 100.0K 1/4 J | | | | 01 |
| R405 | **VV058400** | Flame Proof C. Resistor | 390.0 1/4 J | | | | 01 |
| R406 | **VV065300** | Metal Film Resistor | 6.8K 1/4 F | | | | 01 |
| R407 | **HF456470** | Carbon Resistor | 4.7K 1/4 J | | | | 01 |
| R408 | **HF454100** | Carbon Resistor | 10.0 1/4 J | | | | 01 |
| R409 | **HF454100** | Carbon Resistor | 10.0 1/4 J | | | | 01 |
| R410 | **VV066100** | Metal Film Resistor | 47K 1/4 F | | | | 01 |
| R411 | **VV066100** | Metal Film Resistor | 47K 1/4 F | | | | 01 |
| R412 | **HF454100** | Carbon Resistor | 10.0 1/4 J | | | | 01 |
| R413 | **VV065100** | Metal Film Resistor | 2.2K 1/4 F | | | | 01 |
| R414 | **VV065400** | Metal Film Resistor | 8.2K 1/4 F | | | | 01 |
| R415 | **HF455150** | Carbon Resistor | 150.0 1/4 J | | | | 01 |
| R416 | **VV065100** | Metal Film Resistor | 2.2K 1/4 F | | | | 01 |
| R417 | **VV065400** | Metal Film Resistor | 8.2K 1/4 F | | | | 01 |
| R418 | **HF454100** | Carbon Resistor | 10.0 1/4 J | | | | 01 |
| R419 | **HF457100** | Carbon Resistor | 10.0K 1/4 J | | | | 01 |
| R420 | **HF457100** | Carbon Resistor | 10.0K 1/4 J | | | | 01 |
| R421 | **HF457180** | Carbon Resistor | 18.0K 1/4 J | | | | 01 |
| -424 | **HF457180** | Carbon Resistor | 18.0K 1/4 J | | | | 01 |
| R425 | **HF458100** | Carbon Resistor | 100.0K 1/4 J | | | | 01 |
| R426 | **HF458100** | Carbon Resistor | 100.0K 1/4 J | | | | 01 |
| R427 | **HF456820** | Carbon Resistor | 8.2K 1/4 J | | | | 01 |
| R428 | **HF456820** | Carbon Resistor | 8.2K 1/4 J | | | | 01 |
| R429 | **HF457100** | Carbon Resistor | 10.0K 1/4 J | | | | 01 |
| -431 | **HF457100** | Carbon Resistor | 10.0K 1/4 J | | | | 01 |
| R432 | **HF455680** | Carbon Resistor | 680.0 1/4 J | | | | 01 |
| R433 | **HF456270** | Carbon Resistor | 2.7K 1/4 J | | | | 01 |
| R434 | **HF457100** | Carbon Resistor | 10.0K 1/4 J | | | | 01 |
| R435 | **HF455680** | Carbon Resistor | 680.0 1/4 J | | | | 01 |
| R436 | **HF456270** | Carbon Resistor | 2.7K 1/4 J | | | | 01 |
| R437 | **HF457100** | Carbon Resistor | 10.0K 1/4 J | | | | 01 |
| -439 | **HF457100** | Carbon Resistor | 10.0K 1/4 J | | | | 01 |
| R440 | **HF455680** | Carbon Resistor | 680.0 1/4 J | | | | 01 |
| R441 | **HF456270** | Carbon Resistor | 2.7K 1/4 J | | | | 01 |
| R442 | **HF456270** | Carbon Resistor | 2.7K 1/4 J | | | | 01 |
| R443 | **HF457100** | Carbon Resistor | 10.0K 1/4 J | | | | 01 |
| R444 | **HF455680** | Carbon Resistor | 680.0 1/4 J | | | | 01 |
| R445 | **HF456270** | Carbon Resistor | 2.7K 1/4 J | | | | 01 |
| R446 | **HF456270** | Carbon Resistor | 2.7K 1/4 J | | | | 01 |
| R447 | **HF454100** | Carbon Resistor | 10.0 1/4 J | | | | 01 |
| R448 | **HF454100** | Carbon Resistor | 10.0 1/4 J | | | | 01 |
| R449 | **HF457180** | Carbon Resistor | 18.0K 1/4 J | | | | 01 |
| R450 | **HF457180** | Carbon Resistor | 18.0K 1/4 J | | | | 01 |
| R451 | **HF455220** | Carbon Resistor | 220.0 1/4 J | | | | 01 |
| R452 | **HF455220** | Carbon Resistor | 220.0 1/4 J | | | | 01 |
| R453 | **HF456180** | Carbon Resistor | 1.8K 1/4 J | | | | 01 |
| R454 | **HF456180** | Carbon Resistor | 1.8K 1/4 J | | | | 01 |
| R455 | **HF457100** | Carbon Resistor | 10.0K 1/4 J | | | | 01 |
| R456 | **HF457100** | Carbon Resistor | 10.0K 1/4 J | | | | 01 |
| R457 | **HF454100** | Carbon Resistor | 10.0 1/4 J | | | | 01 |
| R458 | **HF454100** | Carbon Resistor | 10.0 1/4 J | | | | 01 |
| R459 | **HF457180** | Carbon Resistor | 18.0K 1/4 J | | | | 01 |
| R460 | **HF457180** | Carbon Resistor | 18.0K 1/4 J | | | | 01 |
| R461 | **HF457270** | Carbon Resistor | 27.0K 1/4 J | | | | 01 |
| R462 | **HF457270** | Carbon Resistor | 27.0K 1/4 J | | | | 01 |
| R463 | **HF457270** | Carbon Resistor | 27.0K 1/4 J | | | | 01 |
| R464 | **HF457270** | Carbon Resistor | 27.0K 1/4 J | | | | 01 |
| R501 | **HF458100** | Carbon Resistor | 100.0K 1/4 J | | | | 01 |
| R502 | **VV065300** | Metal Film Resistor | 6.8K 1/4 F | | | | 01 |
| R503 | **HF458100** | Carbon Resistor | 100.0K 1/4 J | | | | 01 |
| R504 | **HF458100** | Carbon Resistor | 100.0K 1/4 J | | | | 01 |

✻: New Parts

RANK : Japan only



Downloaded from www.Manualslib.com manuals search engine

| REF NO. | PART NO. | DESCRIPTION | | | REMARKS | QTY | RANK |
|---|---|---|---|---|---|---|---|
| R505 | **VV058400** | Flame Proof C. Resistor | 390.0 1/4 J | | | | 01 |
| R506 | **VV065300** | Metal Film Resistor | 6.8K 1/4 F | | | | 01 |
| R507 | **HF456470** | Carbon Resistor | 4.7K 1/4 J | | | | 01 |
| R508 | **HF454100** | Carbon Resistor | 10.0 1/4 J | | | | 01 |
| R509 | **HF454100** | Carbon Resistor | 10.0 1/4 J | | | | 01 |
| R510 | **VV066100** | Metal Film Resistor | 47K 1/4 F | | | | 01 |
| R511 | **VV066100** | Metal Film Resistor | 47K 1/4 F | | | | 01 |
| R512 | **HF454100** | Carbon Resistor | 10.0 1/4 J | | | | 01 |
| R513 | **VV065100** | Metal Film Resistor | 2.2K 1/4 F | | | | 01 |
| R514 | **VV065400** | Metal Film Resistor | 8.2K 1/4 F | | | | 01 |
| R515 | **HF455150** | Carbon Resistor | 150.0 1/4 J | | | | 01 |
| R516 | **VV065100** | Metal Film Resistor | 2.2K 1/4 F | | | | 01 |
| R517 | **VV065400** | Metal Film Resistor | 8.2K 1/4 F | | | | 01 |
| R518 | **HF454100** | Carbon Resistor | 10.0 1/4 J | | | | 01 |
| R519 | **HF457100** | Carbon Resistor | 10.0K 1/4 J | | | | 01 |
| R520 | **HF457100** | Carbon Resistor | 10.0K 1/4 J | | | | 01 |
| R521 | **HF457180** | Carbon Resistor | 18.0K 1/4 J | | | | 01 |
| -524 | **HF457180** | Carbon Resistor | 18.0K 1/4 J | | | | 01 |
| R525 | **HF458100** | Carbon Resistor | 100.0K 1/4 J | | | | 01 |
| R526 | **HF458100** | Carbon Resistor | 100.0K 1/4 J | | | | 01 |
| R527 | **HF456820** | Carbon Resistor | 8.2K 1/4 J | | | | 01 |
| R528 | **HF456820** | Carbon Resistor | 8.2K 1/4 J | | | | 01 |
| R529 | **HF457100** | Carbon Resistor | 10.0K 1/4 J | | | | 01 |
| -531 | **HF457100** | Carbon Resistor | 10.0K 1/4 J | | | | 01 |
| R532 | **HF455680** | Carbon Resistor | 680.0 1/4 J | | | | 01 |
| R533 | **HF456270** | Carbon Resistor | 2.7K 1/4 J | | | | 01 |
| R534 | **HF457100** | Carbon Resistor | 10.0K 1/4 J | | | | 01 |
| R535 | **HF455680** | Carbon Resistor | 680.0 1/4 J | | | | 01 |
| R536 | **HF456270** | Carbon Resistor | 2.7K 1/4 J | | | | 01 |
| R537 | **HF457100** | Carbon Resistor | 10.0K 1/4 J | | | | 01 |
| -539 | **HF457100** | Carbon Resistor | 10.0K 1/4 J | | | | 01 |
| R540 | **HF455680** | Carbon Resistor | 680.0 1/4 J | | | | 01 |
| R541 | **HF456270** | Carbon Resistor | 2.7K 1/4 J | | | | 01 |
| R542 | **HF456270** | Carbon Resistor | 2.7K 1/4 J | | | | 01 |
| R543 | **HF457100** | Carbon Resistor | 10.0K 1/4 J | | | | 01 |
| R544 | **HF455680** | Carbon Resistor | 680.0 1/4 J | | | | 01 |
| R545 | **HF456270** | Carbon Resistor | 2.7K 1/4 J | | | | 01 |
| R546 | **HF456270** | Carbon Resistor | 2.7K 1/4 J | | | | 01 |
| R547 | **HF454100** | Carbon Resistor | 10.0 1/4 J | | | | 01 |
| R548 | **HF454100** | Carbon Resistor | 10.0 1/4 J | | | | 01 |
| R549 | **HF457180** | Carbon Resistor | 18.0K 1/4 J | | | | 01 |
| R550 | **HF457180** | Carbon Resistor | 18.0K 1/4 J | | | | 01 |
| R551 | **HF455220** | Carbon Resistor | 220.0 1/4 J | | | | 01 |
| R552 | **HF455220** | Carbon Resistor | 220.0 1/4 J | | | | 01 |
| R553 | **HF456180** | Carbon Resistor | 1.8K 1/4 J | | | | 01 |
| R554 | **HF456180** | Carbon Resistor | 1.8K 1/4 J | | | | 01 |
| R555 | **HF457100** | Carbon Resistor | 10.0K 1/4 J | | | | 01 |
| R556 | **HF457100** | Carbon Resistor | 10.0K 1/4 J | | | | 01 |
| R557 | **HF454100** | Carbon Resistor | 10.0 1/4 J | | | | 01 |
| R558 | **HF454100** | Carbon Resistor | 10.0 1/4 J | | | | 01 |
| R559 | **HF457180** | Carbon Resistor | 18.0K 1/4 J | | | | 01 |
| R560 | **HF457180** | Carbon Resistor | 18.0K 1/4 J | | | | 01 |
| R561 | **HF457270** | Carbon Resistor | 27.0K 1/4 J | | | | 01 |
| R562 | **HF457270** | Carbon Resistor | 27.0K 1/4 J | | | | 01 |
| R563 | **HF457270** | Carbon Resistor | 27.0K 1/4 J | | | | 01 |
| R564 | **HF457270** | Carbon Resistor | 27.0K 1/4 J | | | | 01 |
| R601 | **HF456330** | Carbon Resistor | 3.3K 1/4 J | | | | 01 |
| -604 | **HF456330** | Carbon Resistor | 3.3K 1/4 J | | | | 01 |
| R605 | **HF458100** | Carbon Resistor | 100.0K 1/4 J | | | | 01 |
| R606 | **HF458100** | Carbon Resistor | 100.0K 1/4 J | | | | 01 |
| R607 | **HF456470** | Carbon Resistor | 4.7K 1/4 J | | | | 01 |
| R608 | **HF456470** | Carbon Resistor | 4.7K 1/4 J | | | | 01 |
| R609 | **HF457100** | Carbon Resistor | 10.0K 1/4 J | | | | 01 |
| R610 | **HF457100** | Carbon Resistor | 10.0K 1/4 J | | | | 01 |
| R611 | **HF455750** | Carbon Resistor | 750.0 1/4 J | | | | 01 |
| R612 | **HF455680** | Carbon Resistor | 680.0 1/4 J | | | | 01 |
| -614 | **HF455680** | Carbon Resistor | 680.0 1/4 J | | | | 01 |
| R615 | **HF455750** | Carbon Resistor | 750.0 1/4 J | | | | 01 |
| R616 | **HF455680** | Carbon Resistor | 680.0 1/4 J | | | | 01 |
| -618 | **HF455680** | Carbon Resistor | 680.0 1/4 J | | | | 01 |

✻: New Parts

RANK : Japan only



Downloaded from www.Manualslib.com manuals search engine

| REF NO. | PART NO. | DESCRIPTION | | | REMARKS | QTY | RANK |
|---|---|---|---|---|---|---|---|
| R619 | **HF457100** | Carbon Resistor | 10.0K 1/4 J | | | | 01 |
| R620 | **HF457100** | Carbon Resistor | 10.0K 1/4 J | | | | 01 |
| R621 | **HF457180** | Carbon Resistor | 18.0K 1/4 J | | | | 01 |
| R622 | **HF457180** | Carbon Resistor | 18.0K 1/4 J | | | | 01 |
| R623 | **HF457130** | Carbon Resistor | 13.0K 1/4 J | | | | 01 |
| R624 | **HF457100** | Carbon Resistor | 10.0K 1/4 J | | | | 01 |
| R625 | **HF457100** | Carbon Resistor | 10.0K 1/4 J | | | | 01 |
| R626 | **HF457180** | Carbon Resistor | 18.0K 1/4 J | | | | 01 |
| R627 | **HF457180** | Carbon Resistor | 18.0K 1/4 J | | | | 01 |
| R628 | **HF454100** | Carbon Resistor | 10.0 1/4 J | | | | 01 |
| R629 | **HF455220** | Carbon Resistor | 220.0 1/4 J | | | | 01 |
| R630 | **HF455220** | Carbon Resistor | 220.0 1/4 J | | | | 01 |
| R631 | **HF458100** | Carbon Resistor | 100.0K 1/4 J | | | | 01 |
| R632 | **HF458100** | Carbon Resistor | 100.0K 1/4 J | | | | 01 |
| R633 | **HF454100** | Carbon Resistor | 10.0 1/4 J | | | | 01 |
| R634 | **HF456430** | Carbon Resistor | 4.3K 1/4 J | | | | 01 |
| R635 | **HF456430** | Carbon Resistor | 4.3K 1/4 J | | | | 01 |
| R636 | **HF457100** | Carbon Resistor | 10.0K 1/4 J | | | | 01 |
| R637 | **HF457100** | Carbon Resistor | 10.0K 1/4 J | | | | 01 |
| R638 | **HF454100** | Carbon Resistor | 10.0 1/4 J | | | | 01 |
| R639 | **HF454100** | Carbon Resistor | 10.0 1/4 J | | | | 01 |
| R640 | **HF455560** | Carbon Resistor | 560.0 1/4 J | | | | 01 |
| R641 | **HF455560** | Carbon Resistor | 560.0 1/4 J | | | | 01 |
| R642 | **HF458100** | Carbon Resistor | 100.0K 1/4 J | | | | 01 |
| R643 | **HF458100** | Carbon Resistor | 100.0K 1/4 J | | | | 01 |
| R644 | **HF455560** | Carbon Resistor | 560.0 1/4 J | | | | 01 |
| R645 | **HF455560** | Carbon Resistor | 560.0 1/4 J | | | | 01 |
| R701 | **HF456330** | Carbon Resistor | 3.3K 1/4 J | | | | 01 |
| R702 | **HF456330** | Carbon Resistor | 3.3K 1/4 J | | | | 01 |
| R703 | **HF458100** | Carbon Resistor | 100.0K 1/4 J | | | | 01 |
| R704 | **HF456470** | Carbon Resistor | 4.7K 1/4 J | | | | 01 |
| R705 | **HF457100** | Carbon Resistor | 10.0K 1/4 J | | | | 01 |
| R706 | **HF455750** | Carbon Resistor | 750.0 1/4 J | | | | 01 |
| R707 | **HF455680** | Carbon Resistor | 680.0 1/4 J | | | | 01 |
| -709 | **HF455680** | Carbon Resistor | 680.0 1/4 J | | | | 01 |
| R710 | **HF457100** | Carbon Resistor | 10.0K 1/4 J | | | | 01 |
| R711 | **HF457180** | Carbon Resistor | 18.0K 1/4 J | | | | 01 |
| R712 | **HF457180** | Carbon Resistor | 18.0K 1/4 J | | | | 01 |
| R713 | **HF455220** | Carbon Resistor | 220.0 1/4 J | | | | 01 |
| R714 | **HF455220** | Carbon Resistor | 220.0 1/4 J | | | | 01 |
| R715 | **HF456430** | Carbon Resistor | 4.3K 1/4 J | | | | 01 |
| R716 | **HF456430** | Carbon Resistor | 4.3K 1/4 J | | | | 01 |
| R717 | **HF457100** | Carbon Resistor | 10.0K 1/4 J | | | | 01 |
| R718 | **HF457100** | Carbon Resistor | 10.0K 1/4 J | | | | 01 |
| R719 | **HF455560** | Carbon Resistor | 560.0 1/4 J | | | | 01 |
| R720 | **HF454100** | Carbon Resistor | 10.0 1/4 J | | | | 01 |
| R721 | **HF455560** | Carbon Resistor | 560.0 1/4 J | | | | 01 |
| R722 | **HF458100** | Carbon Resistor | 100.0K 1/4 J | | | | 01 |
| R723 | **HF458100** | Carbon Resistor | 100.0K 1/4 J | | | | 01 |
| R724 | **HF455560** | Carbon Resistor | 560.0 1/4 J | | | | 01 |
| R725 | **HF455560** | Carbon Resistor | 560.0 1/4 J | | | | 01 |
| R801 | **HF457180** | Carbon Resistor | 18.0K 1/4 J | | | | 01 |
| R802 | **HF457180** | Carbon Resistor | 18.0K 1/4 J | | | | 01 |
| R803 | **HF457100** | Carbon Resistor | 10.0K 1/4 J | | | | 01 |
| R804 | **HF457100** | Carbon Resistor | 10.0K 1/4 J | | | | 01 |
| R805 | **HF458100** | Carbon Resistor | 100.0K 1/4 J | | | | 01 |
| R806 | **HF458100** | Carbon Resistor | 100.0K 1/4 J | | | | 01 |
| R807 | **HF456150** | Carbon Resistor | 1.5K 1/4 J | | | | 01 |
| R808 | **HF456150** | Carbon Resistor | 1.5K 1/4 J | | | | 01 |
| R809 | **HF457180** | Carbon Resistor | 18.0K 1/4 J | | | | 01 |
| R810 | **HF457180** | Carbon Resistor | 18.0K 1/4 J | | | | 01 |
| R811 | **HF457240** | Carbon Resistor | 24.0K 1/4 J | | | | 01 |
| R812 | **HF457240** | Carbon Resistor | 24.0K 1/4 J | | | | 01 |
| R813 | **HF456120** | Carbon Resistor | 1.2K 1/4 J | | | | 01 |
| R814 | **HF456120** | Carbon Resistor | 1.2K 1/4 J | | | | 01 |
| R815 | **HF458130** | Carbon Resistor | 130.0K 1/4 J | | | | 01 |
| R816 | **HF458130** | Carbon Resistor | 130.0K 1/4 J | | | | 01 |
| R817 | **HF454100** | Carbon Resistor | 10.0 1/4 J | | | | 01 |
| R818 | **HF454100** | Carbon Resistor | 10.0 1/4 J | | | | 01 |
| R819 | **HF456270** | Carbon Resistor | 2.7K 1/4 J | | | | 01 |

✻: New Parts

RANK : Japan only



Downloaded from www.Manualslib.com manuals search engine

| | REF NO. | PART NO. | DESCRIPTION | | | REMARKS | QTY | RANK |
|---|---|---|---|---|---|---|---|---|
| | R820 | **HF457120** | Carbon Resistor | 12.0K 1/4 J | | | | 01 |
| | R821 | **HF457120** | Carbon Resistor | 12.0K 1/4 J | | | | 01 |
| | SW101 | **VZ587700** | Push Switch | 2-2 | | 1ch(PAD) | | 01 |
| | SW102 | **VZ587700** | Push Switch | 2-2 | | 2ch(PAD) | | 01 |
| | SW201 | **VZ587700** | Push Switch | 2-2 | | 3ch(PAD) | | 01 |
| | SW202 | **VZ587700** | Push Switch | 2-2 | | 4ch(PAD) | | 01 |
| | SW301 | **VZ587700** | Push Switch | 2-2 | | 5ch(PAD) | | 01 |
| | SW302 | **VZ587700** | Push Switch | 2-2 | | 6ch(PAD) | | 01 |
| * | SW601 | **V3483200** | Slide Switch | SS001-P022BQB-PA6 | | POWER AMP (STEREO-L+R BRIDGE) | | |
| | SW801 | **VU804900** | Push Switch | SPEA31MC16-YL | | DIGITAL EFFECT (VOCAL,L-HALL,H-HALL) | | 05 05 |
| * | SW802 | **V3147300** | Push Switch | SPEA12MC03-YL | | DIGITAL EFFECT(ON) | | |
| | SW803 | **VV051500** | Slide Switch | SSSU012NB1-YL | | PHANTOM +45V(ON/OFF) | | 02 |
| * | VR101 | **V3161000** | Rotary Variable Resistor | B 50.0K RK09D113 | | 1ch&2ch(LOW,MID,HIGH) | | |
| * | -106 | **V3161000** | Rotary Variable Resistor | B 50.0K RK09D113 | | | | |
| | VR107 | **VU804600** | Rotary Variable Resistor | A 20.0K RK09K113 | | 1ch(LEVEL) | | 04 |
| | VR108 | **VU804600** | Rotary Variable Resistor | A 20.0K RK09K113 | | 2ch(LEVEL) | | 04 |
| | VR109 | **VZ610800** | Rotary Variable Resistor | AC 20K RK12L123 | | 1ch(PAN) | | |
| | VR110 | **VU804600** | Rotary Variable Resistor | A 20.0K RK09K113 | | 1ch(EFFECT) | | 04 |
| | VR111 | **VU804600** | Rotary Variable Resistor | A 20.0K RK09K113 | | 1ch(MONI) | | 04 |
| | VR112 | **VZ610800** | Rotary Variable Resistor | AC 20K RK12L123 | | 2ch(PAN) | | |
| | VR113 | **VU804600** | Rotary Variable Resistor | A 20.0K RK09K113 | | 2ch(EFFECT) | | 04 |
| | VR114 | **VU804600** | Rotary Variable Resistor | A 20.0K RK09K113 | | 2ch(MONI) | | 04 |
| * | VR201 | **V3161000** | Rotary Variable Resistor | B 50.0K RK09D113 | | 3ch&4ch(LOW,MID,HIGH) | | |
| * | -206 | **V3161000** | Rotary Variable Resistor | B 50.0K RK09D113 | | | | |
| | VR207 | **VU804600** | Rotary Variable Resistor | A 20.0K RK09K113 | | 3ch(LEVEL) | | 04 |
| | VR208 | **VU804600** | Rotary Variable Resistor | A 20.0K RK09K113 | | 4ch(LEVEL) | | 04 |
| | VR209 | **VZ610800** | Rotary Variable Resistor | AC 20K RK12L123 | | 3ch(PAN) | | |
| | VR210 | **VU804600** | Rotary Variable Resistor | A 20.0K RK09K113 | | 3ch(EFFECT) | | 04 |
| | VR211 | **VU804600** | Rotary Variable Resistor | A 20.0K RK09K113 | | 3ch(MONI) | | 04 |
| | VR212 | **VZ610800** | Rotary Variable Resistor | AC 20K RK12L123 | | 4ch(PAN) | | |
| | VR213 | **VU804600** | Rotary Variable Resistor | A 20.0K RK09K113 | | 4ch(EFFECT) | | 04 |
| | VR214 | **VU804600** | Rotary Variable Resistor | A 20.0K RK09K113 | | 4ch(MONI) | | 04 |
| * | VR301 | **V3161000** | Rotary Variable Resistor | B 50.0K RK09D113 | | 5ch&6ch(LOW,MID,HIGH) | | |
| * | -306 | **V3161000** | Rotary Variable Resistor | B 50.0K RK09D113 | | | | |
| | VR307 | **VU804600** | Rotary Variable Resistor | A 20.0K RK09K113 | | 5ch(LEVEL) | | 04 |
| | VR308 | **VU804600** | Rotary Variable Resistor | A 20.0K RK09K113 | | 6ch(LEVEL) | | 04 |
| | VR309 | **VZ610800** | Rotary Variable Resistor | AC 20K RK12L123 | | 5ch(PAN) | | |
| | VR310 | **VU804600** | Rotary Variable Resistor | A 20.0K RK09K113 | | 5ch(EFFECT) | | 04 |
| | VR311 | **VU804600** | Rotary Variable Resistor | A 20.0K RK09K113 | | 5ch(MONI) | | 04 |
| | VR312 | **VZ610800** | Rotary Variable Resistor | AC 20K RK12L123 | | 6ch(PAN) | | |
| | VR313 | **VU804600** | Rotary Variable Resistor | A 20.0K RK09K113 | | 6ch(EFFECT) | | 04 |
| | VR314 | **VU804600** | Rotary Variable Resistor | A 20.0K RK09K113 | | 6ch(MONI) | | 04 |
| * | VR401 | **VZ611100** | Rotary Variable Resistor | B 50K RK12L123 | | 7ch(LOW,MID,HIGH) | | |
| * | -403 | **VZ611100** | Rotary Variable Resistor | B 50K RK12L123 | | | | |
| | VR404 | **VZ610900** | Rotary Variable Resistor | A 20K RK12L12C | | 7ch(LEVEL) | | |
| | VR405 | **VZ610800** | Rotary Variable Resistor | AC 20K RK12L123 | | 7ch(PAN) | | |
| | VR406 | **VZ610900** | Rotary Variable Resistor | A 20K RK12L12C | | 7ch(EFFECT) | | |
| | VR407 | **VZ610900** | Rotary Variable Resistor | A 20K RK12L12C | | 7ch(MONI) | | |
| * | VR501 | **VZ611100** | Rotary Variable Resistor | B 50K RK12L123 | | 8ch(LOW,MID,HIGH) | | |
| * | -503 | **VZ611100** | Rotary Variable Resistor | B 50K RK12L123 | | | | |
| | VR504 | **VZ610900** | Rotary Variable Resistor | A 20K RK12L12C | | 8ch(LEVEL) | | |
| | VR505 | **VZ610800** | Rotary Variable Resistor | AC 20K RK12L123 | | 8ch(PAN) | | |
| | VR506 | **VZ610900** | Rotary Variable Resistor | A 20K RK12L12C | | 8ch(EFFECT) | | |
| | VR507 | **VZ610900** | Rotary Variable Resistor | A 20K RK12L12C | | 8ch(MONI) | | |
| | VR601 | **VU804300** | Slide Variable Resistor | W 20.0K RS20H12 | | MAIN(STEREO) 125,250,1K, | | 03 |
| | -607 | **VU804300** | Slide Variable Resistor | W 20.0K RS20H12 | | 2K,4K,8K | | 03 |
| | VR608 | **VZ610900** | Rotary Variable Resistor | A 20K RK12L12C | | MAIN(STEREO)(MASTER) | | |
| | VR701 | **VV044600** | Slide Variable Resistor | RS20H11KD017-YL | | MONITOR 125,250,1K,2K,4K, | | 03 |
| | -707 | **VV044600** | Slide Variable Resistor | RS20H11KD017-YL | | 8K | | 03 |
| | VR708 | **VU804600** | Rotary Variable Resistor | A 20.0K RK09K113 | | MONITOR(MASTER) | | 04 |
| | VR709 | **VU804600** | Rotary Variable Resistor | A 20.0K RK09K113 | | EFFECT OUT | | 04 |
| | VR801 | **VZ610900** | Rotary Variable Resistor | A 20K RK12L12C | | MAIN(AUX IN,TAPE IN, | | |
| | -804 | **VZ610900** | Rotary Variable Resistor | A 20K RK12L12C | | EFFECT) | | |
| | | | | | | MONITOR(EFFECT RTN) | | |
| * | | **NX820610** | Circuit Board | PWR J | | J (XV183B0) | | |
| * | | **NX820620** | Circuit Board | PWR U | | U,V (XV183B0) | | |
| * | | **NX820630** | Circuit Board | PWR H | | H,W,B,A (XV183B0) | | |

✻: New Parts

RANK : Japan only



Downloaded from www.Manualslib.com manuals search engine

| | REF NO. | PART NO. | DESCRIPTION | | REMARKS | QTY | RANK |
|---|---|---|---|---|---|---|---|
| * | | NX820640 | Circuit Board Assembly | SP OUT | (XV183B0) | | |
| * | | NX820650 | Circuit Board Assembly | AC J,U,V | (XV183B0) | | |
| * | | NX820660 | Circuit Board Assembly | AC H,W,B,A | (XV183B0) | | |
| * | | V3225000 | Ferrite Core | FR25/15/12-D40 | | | |
| | | VV319600 | Fuse Holder | CQ-05CT | | | 01 |
| | | -- | Jumper Wire | 0.6 | (VV29140) | | 01 |
| | C101 | VZ354000 | Ceramic Capacitor-F | 0.01 50V Z | | | 01 |
| | C102 | UJ866470 | Electrolytic Cap. | 4.70 50.0V | | | 01 |
| | C103 | UJ866470 | Electrolytic Cap. | 4.70 50.0V | | | 01 |
| | C104 | VZ354000 | Ceramic Capacitor-F | 0.01 50V Z | | | 01 |
| | C105 | VZ354000 | Ceramic Capacitor-F | 0.01 50V Z | | | 01 |
| | C106 | UJ896470 | Electrolytic Cap. | 4.7 100.0V | | | 01 |
| | C107 | UJ896470 | Electrolytic Cap. | 4.7 100.0V | | | 01 |
| | C108 | VV082200 | Mylar Capacitor | 3.3 100V M | | | 03 |
| | C109 | VV082200 | Mylar Capacitor | 3.3 100V M | | | 03 |
| | C110 | VZ354300 | Ceramic Capacitor-E | 0.0022 500 M | | | 01 |
| | C111 | VZ354300 | Ceramic Capacitor-E | 0.0022 500 M | | | 01 |
| | C112 | UJ698100 | Electrolytic Cap. | 100.00 100.0V | | | 01 |
| | C113 | UJ698100 | Electrolytic Cap. | 100.00 100.0V | | | 01 |
| | C114 | VZ354600 | Monolithic Ceramic Cap. | 0.10 50V Z | | | 01 |
| | C115 | VZ354600 | Monolithic Ceramic Cap. | 0.10 50V Z | | | 01 |
| * | C116 | V3280500 | Ceramic Capacitor | 100P 500V B | | | 01 |
| * | C117 | V3280500 | Ceramic Capacitor | 100P 500V B | | | 01 |
| | C118 | VZ353500 | Ceramic Capacitor-SL | 100P 50V J | | | 01 |
| | C201 | VZ354000 | Ceramic Capacitor-F | 0.01 50V Z | | | 01 |
| | C202 | UJ866470 | Electrolytic Cap. | 4.70 50.0V | | | 01 |
| | C203 | UJ866470 | Electrolytic Cap. | 4.70 50.0V | | | 01 |
| | C204 | VZ354000 | Ceramic Capacitor-F | 0.01 50V Z | | | 01 |
| | C205 | VZ354000 | Ceramic Capacitor-F | 0.01 50V Z | | | 01 |
| | C206 | UJ896470 | Electrolytic Cap. | 4.7 100.0V | | | 01 |
| | C207 | UJ896470 | Electrolytic Cap. | 4.7 100.0V | | | 01 |
| | C208 | VV082200 | Mylar Capacitor | 3.3 100V M | | | 03 |
| | C209 | VV082200 | Mylar Capacitor | 3.3 100V M | | | 03 |
| | C210 | VZ354300 | Ceramic Capacitor-E | 0.0022 500 M | | | 01 |
| | C211 | VZ354300 | Ceramic Capacitor-E | 0.0022 500 M | | | 01 |
| | C212 | UJ698100 | Electrolytic Cap. | 100.00 100.0V | | | 01 |
| | C213 | UJ698100 | Electrolytic Cap. | 100.00 100.0V | | | 01 |
| | C214 | VZ354600 | Monolithic Ceramic Cap. | 0.1 50V Z | | | 01 |
| | C215 | VZ354600 | Monolithic Ceramic Cap. | 0.1 50V Z | | | 01 |
| | C216 | VZ353500 | Ceramic Capacitor-SL | 100P 50V J | | | 01 |
| | -218 | VZ353500 | Ceramic Capacitor-SL | 100P 50V J | | | 01 |
| | C301 | VZ354000 | Ceramic Capacitor-F | 0.01 50V Z | | | 01 |
| | C302 | UJ866470 | Electrolytic Cap. | 4.70 50.0V | | | 01 |
| | C303 | UJ866470 | Electrolytic Cap. | 4.70 50.0V | | | 01 |
| | C304 | VZ354000 | Ceramic Capacitor-F | 0.01 50V Z | | | 01 |
| | C305 | VZ354000 | Ceramic Capacitor-F | 0.01 50V Z | | | 01 |
| | C306 | UJ896470 | Electrolytic Cap. | 4.7 100.0V | | | 01 |
| | C307 | UJ896470 | Electrolytic Cap. | 4.7 100.0V | | | 01 |
| | C308 | VV082200 | Mylar Capacitor | 3.3 100V M | | | 03 |
| | C309 | VV082200 | Mylar Capacitor | 3.3 100V M | | | 03 |
| | C310 | VZ354300 | Ceramic Capacitor-E | 0.0022 500 M | | | 01 |
| | C311 | VZ354300 | Ceramic Capacitor-E | 0.0022 500 M | | | 01 |
| | C312 | UJ698100 | Electrolytic Cap. | 100.00 100.0V | | | 01 |
| | C313 | UJ698100 | Electrolytic Cap. | 100.00 100.0V | | | 01 |
| | C314 | VZ354600 | Monolithic Ceramic Cap. | 0.1 50V Z | | | 01 |
| | C315 | VZ354600 | Monolithic Ceramic Cap. | 0.1 50V Z | | | 01 |
| | C316 | VZ353500 | Ceramic Capacitor-SL | 100P 50V J | | | 01 |
| | -318 | VZ353500 | Ceramic Capacitor-SL | 100P 50V J | | | 01 |
| | C401 | VV082300 | Mylar Capacitor | 0.1 250V M | | | 01 |
| | C402 | VV082300 | Mylar Capacitor | 0.1 250V M | | | 01 |
| | C403 | VV082100 | Electrolytic Cap. | 6800 80V | | | 08 |
| | C404 | VV082100 | Electrolytic Cap. | 6800 80V | | | 08 |
| | C405 | UJ659100 | Electrolytic Cap. | 1000 35.0V | | | 02 |
| | -408 | UJ659100 | Electrolytic Cap. | 1000 35.0V | | | 02 |
| | C409 | UJ866470 | Electrolytic Cap. | 4.7 50.0V | | | 01 |
| | C410 | UJ866470 | Electrolytic Cap. | 4.7 50.0V | | | 01 |
| | C411 | VZ354000 | Ceramic Capacitor-F | 0.01 50V Z | | | 01 |
| | C412 | UJ866100 | Electrolytic Cap. | 1.00 50.0V | | | 01 |
| | C413 | UJ866100 | Electrolytic Cap. | 1.00 50.0V | | | 01 |
| | C414 | UJ698330 | Electrolytic Cap. | 330.00 100.0V | | | 02 |

✻: New Parts

RANK : Japan only



Downloaded from www.Manualslib.com manuals search engine

| REF NO. | PART NO. | DESCRIPTION | | | REMARKS | QTY | RANK |
|---|---|---|---|---|---|---|---|
| C415 | **UJ698330** | Electrolytic Cap. | 330.00 100.0V | | | | 02 |
| C416 | **UJ896470** | Electrolytic Cap. | 4.7 100.0V | | | | 01 |
| C417 | **UJ896470** | Electrolytic Cap. | 4.7 100.0V | | | | 01 |
| C418 | **UJ866470** | Electrolytic Cap. | 4.70 50.0V | | | | 01 |
| C419 | **UJ847100** | Electrolytic Cap. | 10.00 25.0V | | | | 01 |
| C420 | **UJ847470** | Electrolytic Cap. | 47.00 25.0V | | | | 01 |
| C421 | **UJ828470** | Electrolytic Cap. | 470.00 10.0V | | | | 01 |
| C422 | **VV314800** | Capacitor | 1000P 400V J.U.C.S | | | | 01 |
| C423 | **VV520600** | Capacitor | 0.01 400V J.U.C.S | | | | 02 |
| CN101 | **VV067500** | Connector Base Post | M2426XX 15P TE | | | | 01 |
| CN102 | **LB932060** | Base Post Connector | VH- 6P TE | | | | 01 |
| CN103 | **VV066200** | Connector Base Post | M2426XX 2P TE | | | | 01 |
| CN104 | **LB933060** | Base Post Connector | VH- 6P SE | | | | 01 |
| CN105 | **LB933030** | Base Post Connector | VH- 3P SE | | | | 01 |
| CN106 | **LB933030** | Base Post Connector | VH- 3P SE | | | | 01 |
| D101 | **VD631600** | Diode | 1SS133,176,HSS104 | | | | 01 |
| -104 | **VD631600** | Diode | 1SS133,176,HSS104 | | | | 01 |
| D105 | **VG437700** | Zener Diode | MTZ J 5.6B 5.6V | | | | 01 |
| D106 | **VG437700** | Zener Diode | MTZ J 5.6B 5.6V | | | | 01 |
| D107 | **VD631600** | Diode | 1SS133,176,HSS104 | | | | 01 |
| D108 | **VD631600** | Diode | 1SS133,176,HSS104 | | | | 01 |
| D109 | **IF005560** | Diode | 1SS82TD | | | | 01 |
| D110 | **IF005560** | Diode | 1SS82TD | | | | 01 |
| D111 | **VV306600** | Diode | SFT14 26 | | | | 01 |
| D112 | **VV306600** | Diode | SFT14 26 | | | | 01 |
| D113 | **VV082000** | Diode | 2A01 | | | | 01 |
| -116 | **VV082000** | Diode | 2A01 | | | | 01 |
| D117 | **VU801600** | Diode | 1N4004L 26 | | | | 01 |
| -120 | **VU801600** | Diode | 1N4004L 26 | | | | 01 |
| D121 | **VZ026700** | Diode | RL 10Z LFB2 | | | | 03 |
| D122 | **VZ026700** | Diode | RL 10Z LFB2 | | | | 03 |
| D201 | **VD631600** | Diode | 1SS133,176,HSS104 | | | | 01 |
| -204 | **VD631600** | Diode | 1SS133,176,HSS104 | | | | 01 |
| D205 | **VG437700** | Zener Diode | MTZ J 5.6B 5.6V | | | | 01 |
| D206 | **VG437700** | Zener Diode | MTZ J 5.6B 5.6V | | | | 01 |
| D207 | **VD631600** | Diode | 1SS133,176,HSS104 | | | | 01 |
| D208 | **VD631600** | Diode | 1SS133,176,HSS104 | | | | 01 |
| D209 | **IF005560** | Diode | 1SS82TD | | | | 01 |
| D210 | **IF005560** | Diode | 1SS82TD | | | | 01 |
| D211 | **VV306600** | Diode | SFT14 26 | | | | 01 |
| D212 | **VV306600** | Diode | SFT14 26 | | | | 01 |
| D213 | **VV082000** | Diode | 2A01 | | | | 01 |
| -216 | **VV082000** | Diode | 2A01 | | | | 01 |
| D217 | **VU801600** | Diode | 1N4004L 26 | | | | 01 |
| -220 | **VU801600** | Diode | 1N4004L 26 | | | | 01 |
| D221 | **VZ026700** | Diode | RL 10Z LFB2 | | | | 03 |
| D222 | **VZ026700** | Diode | RL 10Z LFB2 | | | | 03 |
| D301 | **VD631600** | Diode | 1SS133,176,HSS104 | | | | 01 |
| -304 | **VD631600** | Diode | 1SS133,176,HSS104 | | | | 01 |
| D305 | **VG437700** | Zener Diode | MTZ J 5.6B 5.6V | | | | 01 |
| D306 | **VG437700** | Zener Diode | MTZ J 5.6B 5.6V | | | | 01 |
| D307 | **VD631600** | Diode | 1SS133,176,HSS104 | | | | 01 |
| D308 | **VD631600** | Diode | 1SS133,176,HSS104 | | | | 01 |
| D309 | **IF005560** | Diode | 1SS82TD | | | | 01 |
| D310 | **IF005560** | Diode | 1SS82TD | | | | 01 |
| D311 | **VV306600** | Diode | SFT14 26 | | | | 01 |
| D312 | **VV306600** | Diode | SFT14 26 | | | | 01 |
| D313 | **VV082000** | Diode | 2A01 | | | | 01 |
| -316 | **VV082000** | Diode | 2A01 | | | | 01 |
| D317 | **VU801600** | Diode | 1N4004L 26 | | | | 01 |
| -320 | **VU801600** | Diode | 1N4004L 26 | | | | 01 |
| D321 | **VZ026700** | Diode | RL 10Z LFB2 | | | | 03 |
| D322 | **VZ026700** | Diode | RL 10Z LFB2 | | | | 03 |
| * D401 | **V2954200** | Diode Stack | D10XB20 10.0A 200V | | | | |
| D402 | **VU801600** | Diode | 1N4004L 26 | | | | 01 |
| -407 | **VU801600** | Diode | 1N4004L 26 | | | | 01 |
| D408 | **VG438900** | Zener Diode | MTZ J 8.2B 8.2V | | | | 01 |
| D409 | **VU801600** | Diode | 1N4004L 26 | | | | 01 |
| D410 | **VU801600** | Diode | 1N4004L 26 | | | | 01 |
| D411 | **VG440800** | Zener Diode | MTZ J 15.0B 15.0V | | | | 01 |

✻: New Parts

RANK : Japan only



Downloaded from www.Manualslib.com manuals search engine

| | REF NO. | PART NO. | DESCRIPTION | | | REMARKS | QTY | RANK |
|---|---|---|---|---|---|---|---|---|
| | D412 | **VV335500** | Zener Diode | MTZ J 43 43.0V | | | | 01 |
| | -414 | **VV335500** | Zener Diode | MTZ J 43 43.0V | | | | 01 |
| | D415 | **VG438900** | Zener Diode | MTZ J 8.2B 8.2V | | | | 01 |
| | D416 | **VU801600** | Diode | 1N4004L 26 | | | | 01 |
| | D417 | **VU801600** | Diode | 1N4004L 26 | | | | 01 |
| | E101 | **VV075700** | Terminal Plate | | | | | 01 |
| | F101 | **KB001380** | Fuse | 15.00A U | | J | | 04 |
| | F101 | **KB001540** | Fuse | 12.00A UL | | U,V | | 04 |
| | F101 | **KB003360** | Fuse | 6.30A S | | H,W,B,A | | 02 |
| | F102 | **VV070600** | Fuse | TDS 2A 250V J/U/C | | J,U,V | | 01 |
| | F102 | **VV071500** | Fuse | TSD 2A 250V SEMKO | | H,W,B,A | | 01 |
| | F103 | **VV070600** | Fuse | TDS 2A 250V J/U/C | | J,U,V | | 01 |
| | F103 | **VV071500** | Fuse | TSD 2A 250V SEMKO | | H,W,B,A | | 01 |
| | IC101 | **XD853A00** | IC | NJM7815FA | | REGULATOR +15V | | 03 |
| | IC102 | **XD854A00** | IC | NJM7915FA | | REGULATOR -15V | | 03 |
| | IC103 | **XJ607A00** | IC | NJM7805FA | | REGULATOR +5V | | 02 |
| | JK101 | **VV089300** | Phone Jack | H30280072N | | SPEAKERS(L-B,A/L+R,BRIDGE | | 01 |
| | -107 | **VV089300** | Phone Jack | H30280072N | | R-A,B/MONITOR A,B) | | 01 |
| | L101 | **V0030700** | Coil | LHL16NB680K | | | | 04 |
| | -104 | **V0030700** | Coil | LHL16NB680K | | | | 04 |
| | L105 | **VR150900** | Coil | RZ-001 21MM | | | | 02 |
| | L106 | **GE300670** | Ferrite Bead | BL02RN2-R62T4 | | | | 02 |
| | L107 | **GE300670** | Ferrite Bead | BL02RN2-R62T4 | | | | 02 |
| | L201 | **V0030700** | Coil | LHL16NB680K | | | | 04 |
| | -204 | **V0030700** | Coil | LHL16NB680K | | | | 04 |
| | L205 | **VR150900** | Coil | RZ-001 21MM | | | | 02 |
| | L206 | **GE300670** | Ferrite Bead | BL02RN2-R62T4 | | | | 02 |
| | L207 | **GE300670** | Ferrite Bead | BL02RN2-R62T4 | | | | 02 |
| | L301 | **V0030700** | Coil | LHL16NB680K | | | | 04 |
| | -304 | **V0030700** | Coil | LHL16NB680K | | | | 04 |
| | L305 | **VR150900** | Coil | RZ-001 21MM | | | | 02 |
| | L306 | **GE300670** | Ferrite Bead | BL02RN2-R62T4 | | | | 02 |
| | L307 | **GE300670** | Ferrite Bead | BL02RN2-R62T4 | | | | 02 |
| | PR101 | **VL964800** | Positive Thermistor | PTH9M04BH222TS2 | | | | 04 |
| | PR102 | **VL965100** | Positive Thermistor | PTH9M04BE222TS2 | | | | 04 |
| | Q101 | **VE198700** | Transistor | 2SA1145 O,Y | | | | 01 |
| | Q102 | **VE198800** | Transistor | 2SC2705 O,Y | | | | 01 |
| | Q103 | **V2797700** | Transistor | 2SC5395 E,F | | | | 01 |
| | Q104 | **V2797600** | Transistor | 2SA1993 E,F | | | | 01 |
| | Q105 | **VE198800** | Transistor | 2SC2705 O,Y | | | | 01 |
| | Q106 | **VE198700** | Transistor | 2SA1145 O,Y | | | | 01 |
| * | Q107N | **V2954300** | Pair Transistor | B1647/D2560 | | ) Set | | |
| * | Q108P | | Pair Transistor | B1647/D2560 | | | | |
| * | Q109N | **V2954300** | Pair Transistor | B1647/D2560 | | ) Set | | |
| * | Q110P | | Pair Transistor | B1647/D2560 | | | | |
| | Q111 | **VP872600** | Transistor | 2SA1708 S,T | | | | 01 |
| | Q112 | **VP872700** | Transistor | 2SC4488 S,T | | | | 01 |
| * | Q113N | **V2954300** | Pair Transistor | B1647/D2560 | | ) Set | | |
| * | Q114P | | Pair Transistor | B1647/D2560 | | | | |
| | Q201 | **VE198700** | Transistor | 2SA1145 O,Y | | | | 01 |
| | Q202 | **VE198800** | Transistor | 2SC2705 O,Y | | | | 01 |
| | Q203 | **V2797700** | Transistor | 2SC5395 E,F | | | | 01 |
| | Q204 | **V2797600** | Transistor | 2SA1993 E,F | | | | 01 |
| | Q205 | **VE198800** | Transistor | 2SC2705 O,Y | | | | 01 |
| | Q206 | **VE198700** | Transistor | 2SA1145 O,Y | | | | 01 |
| * | Q207N | **V2954300** | Pair Transistor | B1647/D2560 | | ) Set | | |
| * | Q208P | | Pair Transistor | B1647/D2560 | | | | |
| * | Q209N | **V2954300** | Pair Transistor | B1647/D2560 | | ) Set | | |
| * | Q210P | | Pair Transistor | B1647/D2560 | | | | |
| | Q211 | **VP872600** | Transistor | 2SA1708 S,T | | | | 01 |
| | Q212 | **VP872700** | Transistor | 2SC4488 S,T | | | | 01 |
| * | Q213N | **V2954300** | Pair Transistor | B1647/D2560 | | | | |
| * | Q214P | | Pair Transistor | B1647/D2560 | | | | |
| | Q301 | **VE198700** | Transistor | 2SA1145 O,Y | | | | 01 |
| | Q302 | **VE198800** | Transistor | 2SC2705 O,Y | | | | 01 |
| | Q303 | **V2797700** | Transistor | 2SC5395 E,F | | | | 01 |
| | Q304 | **V2797600** | Transistor | 2SA1993 E,F | | | | 01 |
| | Q305 | **VE198800** | Transistor | 2SC2705 O,Y | | | | 01 |
| | Q306 | **VE198700** | Transistor | 2SA1145 O,Y | | | | 01 |
| * | Q307N | **V2954300** | Pair Transistor | B1647/D2560 | | ) | | |

✻: New Parts

RANK : Japan only



Downloaded from www.Manualslib.com manuals search engine

| | REF NO. | PART NO. | DESCRIPTION | | | REMARKS | QTY | RANK |
|---|---|---|---|---|---|---|---|---|
| * | Q308P | | Pair Transistor | B1647/D2560 | | Set | | |
| * | Q309N | **V2954300** | Pair Transistor | B1647/D2560 | | Set | | |
| * | Q310P | | Pair Transistor | B1647/D2560 | | | | |
| | Q311 | **VP872600** | Transistor | 2SA1708 S,T | | | | 01 |
| | Q312 | **VP872700** | Transistor | 2SC4488 S,T | | | | 01 |
| * | Q313N | **V2954300** | Pair Transistor | B1647/D2560 | | Set | | |
| * | Q314P | | Pair Transistor | B1647/D2560 | | | | |
| | Q401 | **V2797700** | Transistor | 2SC5395 E,F | | | | 01 |
| | Q402 | **VS883400** | Transistor | 2SD2394 E,F | | | | 02 |
| | Q403 | **VS883400** | Transistor | 2SD2394 E,F | | | | 02 |
| | Q404 | **V2797700** | Transistor | 2SC5395 E,F | | | | 01 |
| | Q405 | **V2797600** | Transistor | 2SA1993 E,F | | | | 01 |
| | Q406 | **V2797700** | Transistor | 2SC5395 E,F | | | | 01 |
| | -408 | **V2797700** | Transistor | 2SC5395 E,F | | | | 01 |
| | R101 | **HF455220** | Carbon Resistor | 220.0 1/4 J | | | | 01 |
| | R102 | **HF455220** | Carbon Resistor | 220.0 1/4 J | | | | 01 |
| | R103 | **HF457470** | Carbon Resistor | 47.0K 1/4 J | | | | 01 |
| | R104 | **HF457470** | Carbon Resistor | 47.0K 1/4 J | | | | 01 |
| | R105 | **HF457100** | Carbon Resistor | 10.0K 1/4 J | | | | 01 |
| | -108 | **HF457100** | Carbon Resistor | 10.0K 1/4 J | | | | 01 |
| | R109 | **HF457150** | Carbon Resistor | 15.0K 1/4 J | | | | 01 |
| | R110 | **HF457150** | Carbon Resistor | 15.0K 1/4 J | | | | 01 |
| | R111 | **VZ009300** | Flame Proof C. Resistor | 330.0 1/4 J | | | | 01 |
| | R112 | **VZ009300** | Flame Proof C. Resistor | 330.0 1/4 J | | | | 01 |
| | R113 | **VV313800** | Flame Proof C. Resistor | 220.0 1/4 J | | | | 01 |
| | -116 | **VV313800** | Flame Proof C. Resistor | 220.0 1/4 J | | | | 01 |
| | R117 | **VR412900** | Metal Film Resistor | 0.10 3W J | | | | 01 |
| | R118 | **VR412900** | Metal Film Resistor | 0.10 3W J | | | | 01 |
| | R119 | **VV557800** | Flame Proof C. Resistor | 1.0 1/4 J | | | | 01 |
| | -122 | **VV557800** | Flame Proof C. Resistor | 1.0 1/4 J | | | | 01 |
| | R123 | **VV313700** | Flame Proof C. Resistor | 47.0 1/4 J | | | | 01 |
| | R124 | **VV313700** | Flame Proof C. Resistor | 47.0 1/4 J | | | | 01 |
| | R125 | **VV276800** | Flame Proof C. Resistor | 100 1/4 J | | | | 01 |
| | R126 | **VV276800** | Flame Proof C. Resistor | 100 1/4 J | | | | 01 |
| | R127 | **VV058500** | Flame Proof C. Resistor | 10.0 1/4 J | | | | 01 |
| | R128 | **VV058500** | Flame Proof C. Resistor | 10.0 1/4 J | | | | 01 |
| | R129 | **HF458150** | Carbon Resistor | 150.0K 1/4 J | | | | 01 |
| | R201 | **HF455220** | Carbon Resistor | 220.0 1/4 J | | | | 01 |
| | R202 | **HF455220** | Carbon Resistor | 220.0 1/4 J | | | | 01 |
| | R203 | **HF457470** | Carbon Resistor | 47.0K 1/4 J | | | | 01 |
| | R204 | **HF457470** | Carbon Resistor | 47.0K 1/4 J | | | | 01 |
| | R205 | **HF457100** | Carbon Resistor | 10.0K 1/4 J | | | | 01 |
| | -208 | **HF457100** | Carbon Resistor | 10.0K 1/4 J | | | | 01 |
| | R209 | **HF457150** | Carbon Resistor | 15.0K 1/4 J | | | | 01 |
| | R210 | **HF457150** | Carbon Resistor | 15.0K 1/4 J | | | | 01 |
| | R211 | **VZ009300** | Flame Proof C. Resistor | 330.0 1/4 J | | | | 01 |
| | R212 | **VZ009300** | Flame Proof C. Resistor | 330.0 1/4 J | | | | 01 |
| | R213 | **VV313800** | Flame Proof C. Resistor | 220.0 1/4 J | | | | 01 |
| | -216 | **VV313800** | Flame Proof C. Resistor | 220.0 1/4 J | | | | 01 |
| | R217 | **VR412900** | Metal Film Resistor | 0.10 3W J | | | | 01 |
| | R218 | **VR412900** | Metal Film Resistor | 0.10 3W J | | | | 01 |
| | R219 | **VV557800** | Flame Proof C. Resistor | 1.0 1/4 J | | | | 01 |
| | -222 | **VV557800** | Flame Proof C. Resistor | 1.0 1/4 J | | | | 01 |
| | R223 | **VV313700** | Flame Proof C. Resistor | 47.0 1/4 J | | | | 01 |
| | R224 | **VV313700** | Flame Proof C. Resistor | 47.0 1/4 J | | | | 01 |
| | R225 | **VV276800** | Flame Proof C. Resistor | 100 1/4 J | | | | 01 |
| | R226 | **VV276800** | Flame Proof C. Resistor | 100 1/4 J | | | | 01 |
| | R227 | **VV058500** | Flame Proof C. Resistor | 10.0 1/4 J | | | | 01 |
| | R228 | **VV058500** | Flame Proof C. Resistor | 10.0 1/4 J | | | | 01 |
| | R229 | **HF458150** | Carbon Resistor | 150.0K 1/4 J | | | | 01 |
| | R301 | **HF455220** | Carbon Resistor | 220.0 1/4 J | | | | 01 |
| | R302 | **HF455220** | Carbon Resistor | 220.0 1/4 J | | | | 01 |
| | R303 | **HF457470** | Carbon Resistor | 47.0K 1/4 J | | | | 01 |
| | R304 | **HF457470** | Carbon Resistor | 47.0K 1/4 J | | | | 01 |
| | R305 | **HF457100** | Carbon Resistor | 10.0K 1/4 J | | | | 01 |
| | -308 | **HF457100** | Carbon Resistor | 10.0K 1/4 J | | | | 01 |
| | R309 | **HF457150** | Carbon Resistor | 15.0K 1/4 J | | | | 01 |
| | R310 | **HF457150** | Carbon Resistor | 15.0K 1/4 J | | | | 01 |
| | R311 | **VZ009300** | Flame Proof C. Resistor | 330.0 1/4 J | | | | 01 |
| | R312 | **VZ009300** | Flame Proof C. Resistor | 330.0 1/4 J | | | | 01 |

✻: New Parts

RANK : Japan only



Downloaded from www.Manualslib.com manuals search engine

| | REF NO. | PART NO. | DESCRIPTION | | | REMARKS | QTY | RANK |
|---|---|---|---|---|---|---|---|---|
| | R313 | **VV313800** | Flame Proof C. Resistor | 220.0 1/4 J | | | | 01 |
| | -316 | **VV313800** | Flame Proof C. Resistor | 220.0 1/4 J | | | | 01 |
| | R317 | **VR412900** | Metal Film Resistor | 0.10 3W J | | | | 01 |
| | R318 | **VR412900** | Metal Film Resistor | 0.10 3W J | | | | 01 |
| | R319 | **VV557800** | Flame Proof C. Resistor | 1.0 1/4 J | | | | 01 |
| | -322 | **VV557800** | Flame Proof C. Resistor | 1.0 1/4 J | | | | 01 |
| | R323 | **VV313700** | Flame Proof C. Resistor | 47.0 1/4 J | | | | 01 |
| | R324 | **VV313700** | Flame Proof C. Resistor | 47.0 1/4 J | | | | 01 |
| | R325 | **VV276800** | Flame Proof C. Resistor | 100 1/4 J | | | | 01 |
| | R326 | **VV276800** | Flame Proof C. Resistor | 100 1/4 J | | | | 01 |
| | R327 | **VV058500** | Flame Proof C. Resistor | 10.0 1/4 J | | | | 01 |
| | R328 | **VV058500** | Flame Proof C. Resistor | 10.0 1/4 J | | | | 01 |
| | R329 | **HF458150** | Carbon Resistor | 150.0K 1/4 J | | | | 01 |
| | R401 | **VV313800** | Flame Proof C. Resistor | 220.0 1/4 J | | | | 01 |
| | R402 | **VV313800** | Flame Proof C. Resistor | 220.0 1/4 J | | | | 01 |
| | R403 | **HF457120** | Carbon Resistor | 12.0K 1/4 J | | | | 01 |
| | R404 | **HF456220** | Carbon Resistor | 2.2K 1/4 J | | | | 01 |
| | R405 | **HF455100** | Carbon Resistor | 100.0 1/4 J | | | | 01 |
| | R406 | **HF457100** | Carbon Resistor | 10.0K 1/4 J | | | | 01 |
| | R407 | **HF457220** | Carbon Resistor | 22.0K 1/4 J | | | | 01 |
| | R408 | **HF457150** | Carbon Resistor | 15.0K 1/4 J | | | | 01 |
| | R409 | **HF457120** | Carbon Resistor | 12.0K 1/4 J | | | | 01 |
| | R410 | **HF457100** | Carbon Resistor | 10.0K 1/4 J | | | | 01 |
| | R411 | **HF457100** | Carbon Resistor | 10.0K 1/4 J | | | | 01 |
| | R412 | **HF456220** | Carbon Resistor | 2.2K 1/4 J | | | | 01 |
| | R413 | **HF457560** | Carbon Resistor | 56.0K 1/4 J | | | | 01 |
| | R414 | **HF458100** | Carbon Resistor | 100.0K 1/4 J | | | | 01 |
| | R415 | **HF457100** | Carbon Resistor | 10.0K 1/4 J | | | | 01 |
| | R416 | **HF454100** | Carbon Resistor | 10.0 1/4 J | | | | 01 |
| | R417 | **VV276800** | Flame Proof C. Resistor | 100 1/4 J | | | | 01 |
| | R418 | **VV276800** | Flame Proof C. Resistor | 100 1/4 J | | | | 01 |
| | RY101 | **VV315400** | Relay | DC OSA-SH-224DM3M | | | | 06 |
| | RY102 | **VV315400** | Relay | DC OSA-SH-224DM3M | | | | 06 |
| | SW101 | **VY898100** | Push Switch | SDDFA3107U-YL UCS | | POWER ON/OFF | | 05 |
| * | W101 | **V2970100** | Connector Assembly | B&C #18 | | | | |
| | | | | | | | | |
| * | | **V2952500** | Circuit Board | SUB | | (XV184C0) | | |
| | | **--** | Jumper Wire | 0.6 | | (VV29140) | | 01 |
| | C101 | **VZ353000** | Ceramic Capacitor-SL | 33P 50V J | | | | 01 |
| | C102 | **VZ353000** | Ceramic Capacitor-SL | 33P 50V J | | | | 01 |
| | C103 | **UJ847470** | Electrolytic Cap. | 47.00 25.0V | | | | 01 |
| | C104 | **VZ353900** | Ceramic Capacitor-SL | 1000P 50V J | | | | 01 |
| | C105 | **VZ354600** | Monolithic Ceramic Cap. | 0.1 50V Z | | | | 01 |
| | C106 | **UJ847470** | Electrolytic Cap. | 47.00 25.0V | | | | 01 |
| | C107 | **UJ847470** | Electrolytic Cap. | 47.00 25.0V | | | | 01 |
| | C108 | **VV061200** | Mylar Capacitor | 6800P 50V J | | | | 01 |
| | C109 | **VZ353500** | Ceramic Capacitor-SL | 100P 50V J | | | | 01 |
| | C110 | **VZ353500** | Ceramic Capacitor-SL | 100P 50V J | | | | 01 |
| | C111 | **VV062100** | Mylar Capacitor | 0.027 50V J | | | | 01 |
| | C112 | **VV060100** | Mylar Capacitor | 1500P 50V J | | | | 08 |
| | C113 | **VV061400** | Mylar Capacitor | 0.01 50V J | | | | 01 |
| | C114 | **VV062100** | Mylar Capacitor | 0.027 50V J | | | | 01 |
| | C115 | **VV060100** | Mylar Capacitor | 1500P 50V J | | | | 08 |
| | C116 | **UJ847100** | Electrolytic Cap. | 10.00 25.0V | | | | 01 |
| | C117 | **UJ847100** | Electrolytic Cap. | 10.00 25.0V | | | | 01 |
| | C118 | **VV060600** | Mylar Capacitor | 3300P 50V J | | | | 01 |
| | C119 | **VV060600** | Mylar Capacitor | 3300P 50V J | | | | 01 |
| | C120 | **UJ838100** | Electrolytic Cap. | 100.00 16.0V | | | | 01 |
| | C121 | **UJ838100** | Electrolytic Cap. | 100.00 16.0V | | | | 01 |
| | C122 | **UJ866100** | Electrolytic Cap. | 1.00 50.0V | | | | 01 |
| | C123 | **VZ354600** | Monolithic Ceramic Cap. | 0.1 50V Z | | | | 01 |
| | C124 | **VZ353500** | Ceramic Capacitor-SL | 100P 50V J | | | | 01 |
| | C125 | **VZ353500** | Ceramic Capacitor-SL | 100P 50V J | | | | 01 |
| | C126 | **UJ847100** | Electrolytic Cap. | 10.00 25.0V | | | | 01 |
| | C127 | **UJ847100** | Electrolytic Cap. | 10.00 25.0V | | | | 01 |
| | C128 | **VV061400** | Mylar Capacitor | 0.01 50V J | | | | 01 |
| | C129 | **VV061400** | Mylar Capacitor | 0.01 50V J | | | | 01 |
| | C130 | **VV062100** | Mylar Capacitor | 0.027 50V J | | | | 01 |
| | C131 | **VV062100** | Mylar Capacitor | 0.027 50V J | | | | 01 |
| | C132 | **VV060100** | Mylar Capacitor | 1500P 50V J | | | | 08 |

✻: New Parts

RANK : Japan only



Downloaded from www.Manualslib.com manuals search engine

| REF NO. | PART NO. | DESCRIPTION | | | REMARKS | QTY | RANK |
|---|---|---|---|---|---|---|---|
| C133 | **VV060100** | Mylar Capacitor | 1500P 50V J | | | | 08 |
| C134 | **VV062800** | Mylar Capacitor | 0.1 50V J | | | | 01 |
| C135 | **VV062800** | Mylar Capacitor | 0.1 50V J | | | | 01 |
| C136 | **VZ354300** | Ceramic Capacitor-E | 0.0022 500 M | | | | 01 |
| C137 | **VZ354300** | Ceramic Capacitor-E | 0.0022 500 M | | | | 01 |
| C138 | **VZ353500** | Ceramic Capacitor-SL | 100P 50V J | | | | 01 |
| C139 | **VZ353500** | Ceramic Capacitor-SL | 100P 50V J | | | | 01 |
| C140 | **VV061200** | Mylar Capacitor | 6800P 50V J | | | | 01 |
| C141 | **VV061200** | Mylar Capacitor | 6800P 50V J | | | | 01 |
| C142 | **UJ847100** | Electrolytic Cap. | 10.00 25.0V | | | | 01 |
| C143 | **UJ847100** | Electrolytic Cap. | 10.00 25.0V | | | | 01 |
| C144 | **VY946300** | Electrolytic Cap. | 100.0 35.0V | | | | 01 |
| C145 | **VZ354000** | Ceramic Capacitor-F | 0.01 50V Z | | | | 01 |
| -156 | **VZ354000** | Ceramic Capacitor-F | 0.01 50V Z | | | | 01 |
| C157 | **VZ354600** | Monolithic Ceramic Cap. | 0.1 50V Z | | | | 01 |
| C158 | **VZ354600** | Monolithic Ceramic Cap. | 0.1 50V Z | | | | 01 |
| C159 | **UJ847470** | Electrolytic Cap. | 47.00 25.0V | | | | 01 |
| C160 | **UJ866100** | Electrolytic Cap. | 1.00 50.0V | | | | 01 |
| C161 | **VZ354600** | Monolithic Ceramic Cap. | 0.1 50V Z | | | | 01 |
| C162 | **VZ354600** | Monolithic Ceramic Cap. | 0.1 50V Z | | | | 01 |
| C201 | **VZ354000** | Ceramic Capacitor-F | 0.01 50V Z | | | | 01 |
| C202 | **VZ354000** | Ceramic Capacitor-F | 0.01 50V Z | | | | 01 |
| C203 | **VZ353600** | Ceramic Cap.-B | 220P 50V K | | | | 01 |
| -206 | **VZ353600** | Ceramic Cap.-B | 220P 50V K | | | | 01 |
| C207 | **VZ354000** | Ceramic Capacitor-F | 0.01 50V Z | | | | 01 |
| C208 | **VZ353200** | Ceramic Capacitor-SL | 47P 50V J | | | | 01 |
| * C209 | **VZ352600** | Ceramic Capacitor-SL | 6P 50V J | | | | |
| C210 | **VZ353200** | Ceramic Capacitor-SL | 47P 50V J | | | | 01 |
| C211 | **VZ352800** | Ceramic Capacitor-SL | 22P 50V J | | | | 01 |
| C212 | **VZ354000** | Ceramic Capacitor-F | 0.01 50V Z | | | | 01 |
| C213 | **UJ847470** | Electrolytic Cap. | 47.00 25.0V | | | | 01 |
| -215 | **UJ847470** | Electrolytic Cap. | 47.00 25.0V | | | | 01 |
| C216 | **UJ847100** | Electrolytic Cap. | 10.00 25.0V | | | | 01 |
| C301 | **VV330700** | Electrolytic Cap. | 470.00 10.0V | | | | 01 |
| C302 | **VZ353500** | Ceramic Capacitor-SL | 100P 50V J | | | | 01 |
| C303 | **VZ354000** | Ceramic Capacitor-F | 0.01 50V Z | | | | 01 |
| C304 | **VZ353500** | Ceramic Capacitor-SL | 100P 50V J | | | | 01 |
| C305 | **UJ866100** | Electrolytic Cap. | 1.00 50.0V | | | | 01 |
| C306 | **VZ353900** | Ceramic Cap.-B | 1000P 50V K | | | | 01 |
| C307 | **VZ353800** | Ceramic Cap.-B | 470P 50V K | | | | 01 |
| C308 | **UJ847100** | Electrolytic Cap. | 10.00 25.0V | | | | 01 |
| C309 | **UJ828100** | Electrolytic Cap. | 100.00 10.0V | | | | 01 |
| C310 | **UJ896470** | Electrolytic Cap. | 4.7 100.0V | | | | 01 |
| C311 | **UJ896470** | Electrolytic Cap. | 4.7 100.0V | | | | 01 |
| C312 | **FU450500** | Mica Capacitor | 5P 500V D | | | | 01 |
| C313 | **FU451820** | Mica Capacitor | 82P 500V J | | | | 01 |
| C321 | **VV330700** | Electrolytic Cap. | 470.00 10.0V | | | | 01 |
| C322 | **VZ353500** | Ceramic Capacitor-SL | 100P 50V J | | | | 01 |
| C323 | **VZ354000** | Ceramic Capacitor-F | 0.01 50V Z | | | | 01 |
| C324 | **VZ353500** | Ceramic Capacitor-SL | 100P 50V J | | | | 01 |
| C329 | **UJ828100** | Electrolytic Cap. | 100.00 10.0V | | | | 01 |
| C330 | **UJ896470** | Electrolytic Cap. | 4.7 100.0V | | | | 01 |
| C331 | **UJ896470** | Electrolytic Cap. | 4.7 100.0V | | | | 01 |
| C332 | **FU450500** | Mica Capacitor | 5P 500V D | | | | 01 |
| C333 | **FU451820** | Mica Capacitor | 82P 500V J | | | | 01 |
| C341 | **VV330700** | Electrolytic Cap. | 470.00 10.0V | | | | 01 |
| C342 | **VZ353500** | Ceramic Capacitor-SL | 100P 50V J | | | | 01 |
| C343 | **VZ354000** | Ceramic Capacitor-F | 0.01 50V Z | | | | 01 |
| C344 | **VZ353500** | Ceramic Capacitor-SL | 100P 50V J | | | | 01 |
| C345 | **UJ866100** | Electrolytic Cap. | 1.00 50.0V | | | | 01 |
| C346 | **VZ353900** | Ceramic Cap.-B | 1000P 50V K | | | | 01 |
| C347 | **VZ353800** | Ceramic Cap.-B | 470P 50V K | | | | 01 |
| C348 | **UJ847100** | Electrolytic Cap. | 10.00 25.0V | | | | 01 |
| C349 | **UJ828100** | Electrolytic Cap. | 100.00 10.0V | | | | 01 |
| C350 | **UJ896470** | Electrolytic Cap. | 4.7 100.0V | | | | 01 |
| C351 | **UJ896470** | Electrolytic Cap. | 4.7 100.0V | | | | 01 |
| C352 | **FU450500** | Mica Capacitor | 5P 500V D | | | | 01 |
| C353 | **FU451820** | Mica Capacitor | 82P 500V J | | | | 01 |
| C361 | **VZ354000** | Ceramic Capacitor-F | 0.01 50V Z | | | | 01 |
| -366 | **VZ354000** | Ceramic Capacitor-F | 0.01 50V Z | | | | 01 |

✻: New Parts

RANK : Japan only



Downloaded from www.Manualslib.com manuals search engine

| REF NO. | PART NO. | DESCRIPTION | | | REMARKS | QTY | RANK |
|---|---|---|---|---|---|---|---|
| CN101 | **VV067500** | Connector Base Post | M2426XX 15P TE | | | | 01 |
| CN201 | **VV067000** | Connector Base Post | M2426XX 10P TE | | | | 01 |
| CN202 | **VV066500** | Connector Base Post | M2426XX 5P TE | | | | 01 |
| CN301 | **VV067500** | Connector Base Post | M2426XX 15P TE | | | | 01 |
| D101 | **VD631600** | Diode | 1SS133,176,HSS104 | | | | 01 |
| -105 | **VD631600** | Diode | 1SS133,176,HSS104 | | | | 01 |
| D301 | **VD631600** | Diode | 1SS133,176,HSS104 | | | | 01 |
| -318 | **VD631600** | Diode | 1SS133,176,HSS104 | | | | 01 |
| EM101 | **VV056900** | Noise Filter | ZJSR5101-223TA | | | | 01 |
| -104 | **VV056900** | Noise Filter | ZJSR5101-223TA | | | | 01 |
| IC101 | **XN299A00** | IC | YSS234(SP3) | | SP3 | | 11 |
| IC102 | **XU783A00** | IC | W24258-70LL | | SRAM 256K | | 05 |
| IC103 | **IR007400** | IC | TC74HC74AP | | DFF | | 04 |
| IC104 | **IR001400** | IC | TC74HC14AP | | INVERTER | | 02 |
| IC105 | **XM922A00** | IC | NJM4558L | | OP AMP | | 01 |
| IC105 | **XQ212A00** | IC | NJM4558L-D | | | | 03 |
| IC106 | **XM922A00** | IC | NJM4558L | | OP AMP | | 01 |
| IC106 | **XQ212A00** | IC | NJM4558L-D | | | | 03 |
| IC107 | **XN796A00** | IC | NJM2082L | | OP AMP | | 02 |
| IC108 | **XM922A00** | IC | NJM4558L | | OP AMP | | 01 |
| -110 | **XM922A00** | IC | NJM4558L | | OP AMP | | 01 |
| IC108 | **XQ212A00** | IC | NJM4558L-D | | OP AMP | | 03 |
| -110 | **XQ212A00** | IC | NJM4558L-D | | OP AMP | | 03 |
| IC111 | **XJ607A00** | IC | NJM7805FA | | REGULATOR +5V | | 02 |
| IC201 | **XM356A00** | IC | NJM2068L-D | | OP AMP | | 02 |
| IC202 | **XM356A00** | IC | NJM2068L-D | | OP AMP | | 02 |
| IC301 | **XM922A00** | IC | NJM4558L | | | | 01 |
| -303 | **XM922A00** | IC | NJM4558L | | OP AMP | | 01 |
| IC301 | **XQ212A00** | IC | NJM4558L-D | | | | 03 |
| -303 | **XQ212A00** | IC | NJM4558L-D | | | | 03 |
| Q101 | **VD678700** | Digital Transistor | DTC114ES | | | | 01 |
| Q102 | **IA101590** | Transistor | 2SA1015 O,Y | | | | 01 |
| Q103 | **IA101590** | Transistor | 2SA1015 O,Y | | | | 01 |
| Q301 | **VD678500** | Digital Transistor | DTA114ES | | | | 01 |
| Q302 | **VD678700** | Digital Transistor | DTC114ES | | | | 01 |
| Q303 | **IA101590** | Transistor | 2SA1015 O,Y | | | | 01 |
| Q304 | **IA101590** | Transistor | 2SA1015 O,Y | | | | 01 |
| * Q305 | **IC1815M0** | Transistor | 2SC1815 Y,GR | | | | 01 |
| Q306 | **IC1815M0** | Transistor | 2SC1815 Y,GR | | | | 01 |
| Q307 | **VD678700** | Digital Transistor | DTC114ES | | | | 01 |
| Q308 | **VD678500** | Digital Transistor | DTA114ES | | | | 01 |
| Q309 | **IA097030** | Transistor | 2SA970 GR,BL | | | | 01 |
| -311 | **IA097030** | Transistor | 2SA970 GR,BL | | | | 01 |
| Q312 | **IC224030** | Transistor | 2SC2240 GR,BL | | | | 01 |
| Q313 | **IC1815M0** | Transistor | 2SC1815 Y,GR | | | | 01 |
| Q314 | **IC1815M0** | Transistor | 2SC1815 Y,GR | | | | 01 |
| Q315 | **IA097030** | Transistor | 2SA970 GR,BL | | | | 01 |
| Q316 | **IC224030** | Transistor | 2SC2240 GR,BL | | | | 01 |
| Q317 | **IC224030** | Transistor | 2SC2240 GR,BL | | | | 01 |
| Q318 | **IA097030** | Transistor | 2SA970 GR,BL | | | | 01 |
| Q323 | **IA101590** | Transistor | 2SA1015 O,Y | | | | 01 |
| Q324 | **IA101590** | Transistor | 2SA1015 O,Y | | | | 01 |
| Q325 | **IC1815M0** | Transistor | 2SC1815 Y,GR | | | | 01 |
| Q326 | **IC1815M0** | Transistor | 2SC1815 Y,GR | | | | 01 |
| Q329 | **IA097030** | Transistor | 2SA970 GR,BL | | | | 01 |
| -331 | **IA097030** | Transistor | 2SA970 GR,BL | | | | 01 |
| Q332 | **IC224030** | Transistor | 2SC2240 GR,BL | | | | 01 |
| Q333 | **IC1815M0** | Transistor | 2SC1815 Y,GR | | | | 01 |
| Q334 | **IC1815M0** | Transistor | 2SC1815 Y,GR | | | | 01 |
| Q335 | **IA097030** | Transistor | 2SA970 GR,BL | | | | 01 |
| Q336 | **IC224030** | Transistor | 2SC2240 GR,BL | | | | 01 |
| Q337 | **IC224030** | Transistor | 2SC2240 GR,BL | | | | 01 |
| Q338 | **IA097030** | Transistor | 2SA970 GR,BL | | | | 01 |
| Q341 | **VD678500** | Digital Transistor | DTA114ES | | | | 01 |
| * Q342 | **VD678700** | Digital Transistor | DTC114ES | | | | 01 |
| Q343 | **IA101590** | Transistor | 2SA1015 O,Y | | | | 01 |
| Q344 | **IA101590** | Transistor | 2SA1015 O,Y | | | | 01 |
| Q345 | **IC1815M0** | Transistor | 2SC1815 Y,GR | | | | 01 |
| Q346 | **IC1815M0** | Transistor | 2SC1815 Y,GR | | | | 01 |
| Q347 | **VD678700** | Digital Transistor | DTC114ES | | | | 01 |

✻: New Parts

RANK : Japan only



Downloaded from www.Manualslib.com manuals search engine

| REF NO. | PART NO. | DESCRIPTION | | | REMARKS | QTY | RANK |
|---|---|---|---|---|---|---|---|
| Q348 | **VD678500** | Digital Transistor | DTA114ES | | | | 01 |
| Q349 | **IA097030** | Transistor | 2SA970 GR,BL | | | | 01 |
| -351 | **IA097030** | Transistor | 2SA970 GR,BL | | | | 01 |
| Q352 | **IC224030** | Transistor | 2SC2240 GR,BL | | | | 01 |
| Q353 | **IC1815M0** | Transistor | 2SC1815 Y,GR | | | | 01 |
| Q354 | **IC1815M0** | Transistor | 2SC1815 Y,GR | | | | 01 |
| Q355 | **IA097030** | Transistor | 2SA970 GR,BL | | | | 01 |
| Q356 | **IC224030** | Transistor | 2SC2240 GR,BL | | | | 01 |
| Q357 | **IC224030** | Transistor | 2SC2240 GR,BL | | | | 01 |
| Q358 | **IA097030** | Transistor | 2SA970 GR,BL | | | | 01 |
| R101 | **HF455680** | Carbon Resistor | 680.0 1/4 J | | | | 01 |
| R102 | **HF458240** | Carbon Resistor | 240.0K 1/4 J | | | | 01 |
| R103 | **HF458240** | Carbon Resistor | 240.0K 1/4 J | | | | 01 |
| R104 | **HF457100** | Carbon Resistor | 10.0K 1/4 J | | | | 01 |
| R105 | **HF457470** | Carbon Resistor | 47.0K 1/4 J | | | | 01 |
| R106 | **HF456330** | Carbon Resistor | 3.3K 1/4 J | | | | 01 |
| R107 | **HF457100** | Carbon Resistor | 10.0K 1/4 J | | | | 01 |
| R108 | **HF456390** | Carbon Resistor | 3.9K 1/4 J | | | | 01 |
| R109 | **HF457100** | Carbon Resistor | 10.0K 1/4 J | | | | 01 |
| R110 | **HF457100** | Carbon Resistor | 10.0K 1/4 J | | | | 01 |
| R111 | **HF456220** | Carbon Resistor | 2.2K 1/4 J | | | | 01 |
| R112 | **HF456220** | Carbon Resistor | 2.2K 1/4 J | | | | 01 |
| R113 | **HF456470** | Carbon Resistor | 4.7K 1/4 J | | | | 01 |
| R114 | **HF456100** | Carbon Resistor | 1.0K 1/4 J | | | | 01 |
| R115 | **HF456220** | Carbon Resistor | 2.2K 1/4 J | | | | 01 |
| -117 | **HF456220** | Carbon Resistor | 2.2K 1/4 J | | | | 01 |
| R118 | **HF457470** | Carbon Resistor | 47.0K 1/4 J | | | | 01 |
| R119 | **HF457470** | Carbon Resistor | 47.0K 1/4 J | | | | 01 |
| R120 | **HF456220** | Carbon Resistor | 2.2K 1/4 J | | | | 01 |
| R125 | **HF456220** | Carbon Resistor | 2.2K 1/4 J | | | | 01 |
| R126 | **HF456220** | Carbon Resistor | 2.2K 1/4 J | | | | 01 |
| R127 | **HF455100** | Carbon Resistor | 100.0 1/4 J | | | | 01 |
| R128 | **HF455100** | Carbon Resistor | 100.0 1/4 J | | | | 01 |
| R129 | **HF456220** | Carbon Resistor | 2.2K 1/4 J | | | | 01 |
| R130 | **HF457100** | Carbon Resistor | 10.0K 1/4 J | | | | 01 |
| -133 | **HF457100** | Carbon Resistor | 10.0K 1/4 J | | | | 01 |
| R134 | **HF456390** | Carbon Resistor | 3.9K 1/4 J | | | | 01 |
| R135 | **HF456390** | Carbon Resistor | 3.9K 1/4 J | | | | 01 |
| R136 | **HF457100** | Carbon Resistor | 10.0K 1/4 J | | | | 01 |
| R137 | **HF457100** | Carbon Resistor | 10.0K 1/4 J | | | | 01 |
| R138 | **HF455470** | Carbon Resistor | 470.0 1/4 J | | | | 01 |
| R139 | **HF455470** | Carbon Resistor | 470.0 1/4 J | | | | 01 |
| R140 | **HF458100** | Carbon Resistor | 100.0K 1/4 J | | | | 01 |
| R141 | **HF458100** | Carbon Resistor | 100.0K 1/4 J | | | | 01 |
| R142 | **HF456470** | Carbon Resistor | 4.7K 1/4 J | | | | 01 |
| R143 | **HF458470** | Carbon Resistor | 470.0K 1/4 J | | | | 01 |
| R144 | **HF458100** | Carbon Resistor | 100.0K 1/4 J | | | | 01 |
| R145 | **HF458100** | Carbon Resistor | 100.0K 1/4 J | | | | 01 |
| R146 | **VV313700** | Flame Proof C. Resistor | 47.0 1/4 J | | | | 01 |
| R201 | **HF457180** | Carbon Resistor | 18.0K 1/4 J | | | | 01 |
| R202 | **HF458120** | Carbon Resistor | 120.0K 1/4 J | | | | 01 |
| R203 | **HF457180** | Carbon Resistor | 18.0K 1/4 J | | | | 01 |
| R204 | **HF457360** | Carbon Resistor | 36.0K 1/4 J | | | | 01 |
| R205 | **HF454100** | Carbon Resistor | 10.0 1/4 J | | | | 01 |
| -208 | **HF454100** | Carbon Resistor | 10.0 1/4 J | | | | 01 |
| R301 | **VV066100** | Metal Film Resistor | 47K 1/4 F | | | | 01 |
| R302 | **HF457150** | Carbon Resistor | 15.0K 1/4 J | | | | 01 |
| R303 | **VZ009900** | Metal Film Resistor | 15K 1/4 F | | | | 01 |
| R304 | **HF457220** | Carbon Resistor | 22.0K 1/4 J | | | | 01 |
| R305 | **HF457330** | Carbon Resistor | 33.0K 1/4 J | | | | 01 |
| R306 | **HF454680** | Carbon Resistor | 68.0 1/4 J | | | | 01 |
| R307 | **HF454680** | Carbon Resistor | 68.0 1/4 J | | | | 01 |
| R308 | **HF457330** | Carbon Resistor | 33.0K 1/4 J | | | | 01 |
| R309 | **HF457220** | Carbon Resistor | 22.0K 1/4 J | | | | 01 |
| R310 | **HF457270** | Carbon Resistor | 27.0K 1/4 J | | | | 01 |
| R311 | **VV312800** | Metal Film Resistor | 680.0 1/4 F | | | | 01 |
| R312 | **HF457220** | Carbon Resistor | 22.0K 1/4 J | | | | 01 |
| R313 | **HF458390** | Carbon Resistor | 390.0K 1/4 J | | | | 01 |
| R314 | **HF458390** | Carbon Resistor | 390.0K 1/4 J | | | | 01 |
| R315 | **HF455330** | Carbon Resistor | 330.0 1/4 J | | | | 01 |

✻: New Parts

RANK : Japan only



Downloaded from www.Manualslib.com manuals search engine

| REF NO. | PART NO. | DESCRIPTION | | | REMARKS | QTY | RANK |
|---|---|---|---|---|---|---|---|
| R316 | **HF457470** | Carbon Resistor | 47.0K 1/4 J | | | | 01 |
| R317 | **HF457820** | Carbon Resistor | 82.0K 1/4 J | | | | 01 |
| R318 | **HF457820** | Carbon Resistor | 82.0K 1/4 J | | | | 01 |
| R319 | **HF455220** | Carbon Resistor | 220.0 1/4 J | | | | 01 |
| R320 | **HF456470** | Carbon Resistor | 4.7K 1/4 J | | | | 01 |
| R321 | **HF457220** | Carbon Resistor | 22.0K 1/4 J | | | | 01 |
| R322 | **HF458330** | Carbon Resistor | 330.0K 1/4 J | | | | 01 |
| R323 | **HF455560** | Carbon Resistor | 560.0 1/4 J | | | | 01 |
| -325 | **HF455560** | Carbon Resistor | 560.0 1/4 J | | | | 01 |
| R326 | **VV312900** | Metal Film Resistor | 22K 1/4 F | | | | 01 |
| R327 | **HF457560** | Carbon Resistor | 56.0K 1/4 J | | | | 01 |
| R328 | **HF455560** | Carbon Resistor | 560.0 1/4 J | | | | 01 |
| R329 | **HF455560** | Carbon Resistor | 560.0 1/4 J | | | | 01 |
| R330 | **VV276800** | Flame Proof C. Resistor | 100 1/4 J | | | | 01 |
| R331 | **VV276800** | Flame Proof C. Resistor | 100 1/4 J | | | | 01 |
| R332 | **VV066100** | Metal Film Resistor | 47K 1/4 F | | | | 01 |
| R333 | **HF457150** | Carbon Resistor | 15.0K 1/4 J | | | | 01 |
| R334 | **VZ009900** | Metal Film Resistor | 15K 1/4 F | | | | 01 |
| R335 | **HF457220** | Carbon Resistor | 22.0K 1/4 J | | | | 01 |
| R336 | **HF457330** | Carbon Resistor | 33.0K 1/4 J | | | | 01 |
| R337 | **HF454680** | Carbon Resistor | 68.0 1/4 J | | | | 01 |
| R338 | **HF454680** | Carbon Resistor | 68.0 1/4 J | | | | 01 |
| R339 | **HF457330** | Carbon Resistor | 33.0K 1/4 J | | | | 01 |
| R340 | **HF457220** | Carbon Resistor | 22.0K 1/4 J | | | | 01 |
| R341 | **VV312800** | Metal Film Resistor | 680.0 1/4 F | | | | 01 |
| R342 | **HF457220** | Carbon Resistor | 22.0K 1/4 J | | | | 01 |
| R343 | **HF458330** | Carbon Resistor | 330.0K 1/4 J | | | | 01 |
| R344 | **HF455560** | Carbon Resistor | 560.0 1/4 J | | | | 01 |
| -346 | **HF455560** | Carbon Resistor | 560.0 1/4 J | | | | 01 |
| R347 | **VV312900** | Metal Film Resistor | 22K 1/4 F | | | | 01 |
| R348 | **HF457560** | Carbon Resistor | 56.0K 1/4 J | | | | 01 |
| R349 | **HF455560** | Carbon Resistor | 560.0 1/4 J | | | | 01 |
| R350 | **HF455560** | Carbon Resistor | 560.0 1/4 J | | | | 01 |
| R351 | **VV276800** | Flame Proof C. Resistor | 100 1/4 J | | | | 01 |
| R352 | **VV276800** | Flame Proof C. Resistor | 100 1/4 J | | | | 01 |
| R353 | **VV066100** | Metal Film Resistor | 47K 1/4 F | | | | 01 |
| R354 | **HF457150** | Carbon Resistor | 15.0K 1/4 J | | | | 01 |
| R355 | **VZ009900** | Metal Film Resistor | 15K 1/4 F | | | | 01 |
| R356 | **HF457220** | Carbon Resistor | 22.0K 1/4 J | | | | 01 |
| R357 | **HF457330** | Carbon Resistor | 33.0K 1/4 J | | | | 01 |
| R358 | **HF454680** | Carbon Resistor | 68.0 1/4 J | | | | 01 |
| R359 | **HF454680** | Carbon Resistor | 68.0 1/4 J | | | | 01 |
| R360 | **HF457330** | Carbon Resistor | 33.0K 1/4 J | | | | 01 |
| R361 | **HF457220** | Carbon Resistor | 22.0K 1/4 J | | | | 01 |
| R362 | **HF457270** | Carbon Resistor | 27.0K 1/4 J | | | | 01 |
| R363 | **VV312800** | Metal Film Resistor | 680.0 1/4 F | | | | 01 |
| R364 | **HF457220** | Carbon Resistor | 22.0K 1/4 J | | | | 01 |
| R365 | **HF458390** | Carbon Resistor | 390.0K 1/4 J | | | | 01 |
| R366 | **HF458390** | Carbon Resistor | 390.0K 1/4 J | | | | 01 |
| R367 | **HF455330** | Carbon Resistor | 330.0 1/4 J | | | | 01 |
| R368 | **HF457470** | Carbon Resistor | 47.0K 1/4 J | | | | 01 |
| R369 | **HF457820** | Carbon Resistor | 82.0K 1/4 J | | | | 01 |
| R370 | **HF457820** | Carbon Resistor | 82.0K 1/4 J | | | | 01 |
| R371 | **HF455220** | Carbon Resistor | 220.0 1/4 J | | | | 01 |
| R372 | **HF456470** | Carbon Resistor | 4.7K 1/4 J | | | | 01 |
| R373 | **HF457220** | Carbon Resistor | 22.0K 1/4 J | | | | 01 |
| R374 | **HF458330** | Carbon Resistor | 330.0K 1/4 J | | | | 01 |
| R375 | **HF455560** | Carbon Resistor | 560.0 1/4 J | | | | 01 |
| -377 | **HF455560** | Carbon Resistor | 560.0 1/4 J | | | | 01 |
| R378 | **VV312900** | Metal Film Resistor | 22K 1/4 F | | | | 01 |
| R379 | **HF457560** | Carbon Resistor | 56.0K 1/4 J | | | | 01 |
| R380 | **HF455560** | Carbon Resistor | 560.0 1/4 J | | | | 01 |
| R381 | **HF455560** | Carbon Resistor | 560.0 1/4 J | | | | 01 |
| R382 | **VV276800** | Flame Proof C. Resistor | 100 1/4 J | | | | 01 |
| R383 | **VV276800** | Flame Proof C. Resistor | 100 1/4 J | | | | 01 |
| R384 | **HF455330** | Carbon Resistor | 330.0 1/4 J | | | | 01 |
| -389 | **HF455330** | Carbon Resistor | 330.0 1/4 J | | | | 01 |
| X101 | **QU007700** | Ceramic Resonator | 12M CSA12.0MTZ | | | | 03 |
| | | | | | | | |
| * | **XV025A00** | Power Transformer | E | | J | | |

✻: New Parts

RANK : Japan only



Downloaded from www.Manualslib.com manuals search engine

| | REF NO. | PART NO. | DESCRIPTION | | | REMARKS | QTY | RANK |
|---|---|---|---|---|---|---|---|---|
| * | | **XV026A00** | Power Transformer | UL CSA | | U,V | | |
| * | | **XV027A00** | Power Transformer | CE | | H,W,B | | |
| * | | **XV028A00** | Power Transformer | AS | | A | | |
| | | | | | | | | |
| * | | **V2955500** | Fan | 3110KL05WB50L34 | | | | |
| * | | **V3277000** | AC Cord | J VCTF 2X0.75 12A | | J | | |
| | | **VV205600** | AC Cord | UC SJT 3X#18 10A | | U,V | | 06 |
| * | | **V3277100** | AC Cord | E H05VV-F3X0.7510A | | H,W | | |
| | | **VV058300** | AC Cord | BS H05VV-F3X0.75 | | B | | 08 |
| | | **VV058200** | AC Cord | E H05VV-F3X0.75 6A | | A | | 06 |

✻: New Parts

RANK : Japan only



Downloaded from www.Manualslib.com manuals search engine

## ■EMX860ST CIRCUIT DIAGRAM1/2(MIX)

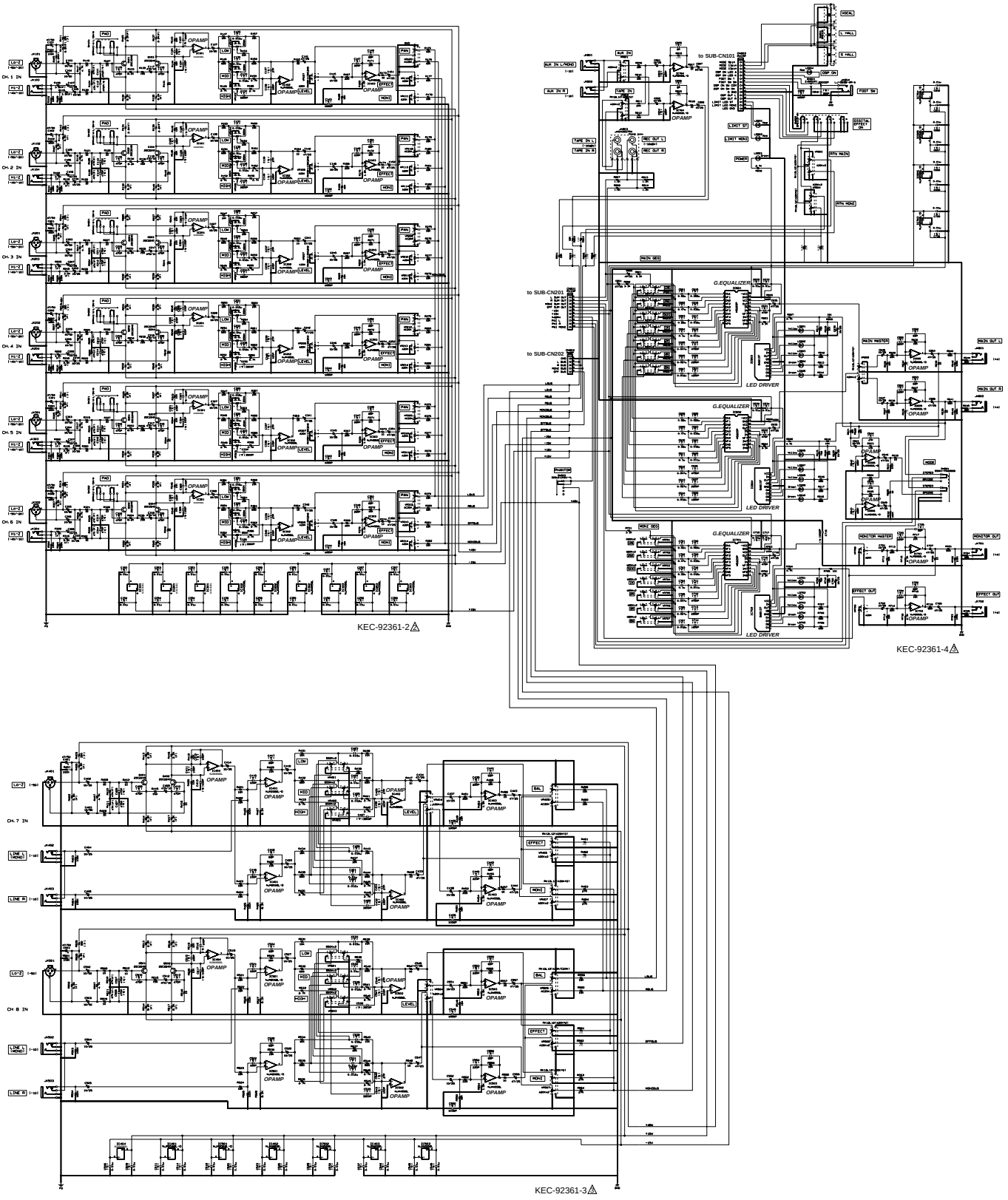


（マ）：**Mylar Capacitor**
（セ）：**Ceramic Capacitor**
（フ）：**Flame Proof C. Resistor**
（Ｆ）：**Metal Film Resistor**

### ■WARNING

**Components having special characteristics are marked△and must be replaced with parts having specification equal to those originally installed.**

**NOTE : See parts list for details of circuit board component parts.**



Downloaded from www.Manualslib.com manuals search engine

本资料由OKXIA视听皮带资源库www.okxia.cn提供



SUB

KEC-92362-2

KEC-92362-3

KEC-92362-4

PWR
1/3

KEC-92360

（マ）： **Mylar Capacitor**
（セ）： **Ceramic Capacitor**
（フ）： **Flame Proof C. Resistor**
金被、（F）： **Metal Film Resistor**
（マイカ）： **Mica Capacitor**
（積セ）： **Monolithic Ceramic Cap.**

- NJM7815FA (XD853A00) REGULATOR +15V
- NJM7805FA (FX5074A00) REGULATOR +5V

1: INPUT 2: GND 3: OUTPUT

- NJM7915FA (XD854A00) REGULATOR -15V

1: GND 2: INPUT 3: OUTPUT

- 1N4004L(VU801600) DIODE

Anode Cathode

- MTZ J 43 43V (VV335500)
- MTZ J 8.2B 8.2V (VG438900)
- MTZ J 27.0D 27.0 (VG443100) ZENER DIODE

1: ANODE 2: CATHODE



Downloaded from www.Manualslib.com manuals search engine