POWERED MIXER

EMX660

SERVICE MANUAL



CONTENTS

SPECIFICATIONS 3/5
DIMENSIONS 6
PANEL LAYOUT 7
BLOCK & LEVEL DIAGRAM 10
CIRCUIT BOARD LAYOUT 11
DISASSEMBLY PROCEDURE 12
LSI PIN DESCRIPTION 15
IC BLOCK DIAGRAM 17
INSPECTIONS 18/23
TROUBLE SHOOTING 28
PARTS LIST
OVERALL CIRCUIT DIAGRAM
CIRCUIT BOARDS

ECO-PULP エコパルプ

CONTAINS SOYOIL

This document is printed on chlorine free (ECF) paper with soy ink.

PA 011519
20000608-74800

YAMAHA
HAMAMATSU, JAPAN
1.45K-479 Printed in Japan 2000.06

SPECIFICATIONS

●General specifications

Maximum output power	300 W + 300 W/4ohms @0.5% THD at 1 kHz (POWER AMP OUT 1, 2) 215 W + 215 W/8ohms @0.5% THD at 1 kHz (POWER AMP OUT 1, 2) 600 W/8ohms @0.5% THD at 1 kHz (BRIDGE)	
Frequency response	20 Hz~20 kHz +1 dB, –3 dB @1 W output into 8ohms (POWER AMP OUT) 20 Hz~20 kHz +1 dB, –3 dB @+4 dB output into 10 kohms (MAIN OUT, MONITOR OUT, EFFECT SEND)	
Total harmonic distortion	Less than 0.5% @20 Hz~20 kHz, 150 W output into 4ohms (POWER AMP OUT 1, 2) Less than 0.3% @20 Hz~20 kHz, +14 dB output into 10 kohms (MAIN OUT, MONITOR OUT, EFFECT OUT)	
Hum & noise (Average, Rs=150Ω) (with 20 Hz~20 kHz BPF)	–124 dB equivalent input noise, –65 dB residual output noise (POWER AMP OUT)	
	–88 dB residual output noise (MAIN OUT, MONITOR OUT, EFFECT SEND)	
	–79 dB (83 dB S/N) MAIN OUT, MONITOR OUT	Master level control at nominal level and all channel level controls at minimum.
	–69 dB (73 dB S/N) MAIN OUT, MONITOR OUT	Master level control at nominal level and 1 channel level control at nominal level.
	–75 dB (79 dB S/N) EFFECT SEND	Master level control at nominal level and all channel level controls at minimum.
	–69 dB (73 dB S/N) EFFECT SEND	Master level control at nominal level and 1 channel level control at nominal level.
Maximum voltage gain (PAD: OFF)	88 dB CH IN (Lo-Z) to POWER AMP OUT (CH1~4) 66 dB CH IN (Lo-Z) to MAIN OUT, MONITOR OUT (CH1~4) 72 dB CH IN (Lo-Z) to EFFECT OUT (CH1~4) 48 dB CH IN (Lo-Z) to REC OUT (CH1~4) 56 dB CH IN (Hi-Z) to MAIN OUT, MONITOR OUT (CH1~4) 26 dB AUX IN to MAIN OUT 24 dB TAPE IN to MAIN OUT 66 dB MIC IN to MAIN OUT, MONITOR OUT (CH5•6) 26 dB LINE IN to MAIN OUT, MONITOR OUT (CH5) 46 dB INST IN to MAIN OUT, MONITOR OUT (CH6)	
Crosstalk at 1 kHz	65 dB adjacent input, 65 dB input to output	
Input channel equalization	±15 dB Maximum HIGH 12 kHz shelving* MID 2.5 kHz peaking LOW 80 Hz shelving* * Turn over/roll-off frequency of shelving: 3 dB below maximum variable level.	
Meters	5 POINTS LED METER (–10, –5, 0, +3, +6 dB) (MAIN OUT, MONITOR OUT)	
Graphic equalizer	7 bands (125, 250, 500, 1 k, 2 k, 4 k, 8 kHz), ±12 dB Maximum (MAIN OUT, MONITOR OUT)	
Internal digital effect	8 types (VO.ECHO 1, VO.ECHO 2, VO.REV. 1, VO.REV. 2, HALL 1, HALL 2, ROOM, PLATE)	
Phantom power	+15 V is supplied to electrically balanced inputs for powering condenser microphones via 2.4 kohms current limiting/isolation resisters.	
Limiter	Comp. : THD≥0.5% (POWER AMP OUT)	
LIMIT indicators	Turns on. : THD≥0.5% (POWER AMP OUT)	
Protection Circuit (Power Amp.)	POWER Switch on/off Mute, DC Detection, Temp (Heatsink Temp≥90˚C)	
Foot switch (FC-5)	DIGITAL EFFECT MUTE : on/off	
Power requirement	USA and Canada 120 V AC 60 Hz Europe 230 V AC 50 Hz Other 240 V AC 50 Hz	
Power consumption	250 W	
Dimensions (WxHxD)	497×275×275 mm	
Weight	17 kg	

- 0 dB=0.775 Vrms

● Input specifications

Input connectors	PAD	Actual load impedance	Nominal impedance	Input level			Connector type
				Sensitivity[1]	Nominal level	Max. before cliping	
CH INPUT (Lo-Z) (CH1~4)	OFF	3 kohms	50~600ohms Mics	–62 dB (0.616 mV)	–50 dB (2.45 mV)	–20 dB (77.5 mV)	XLR-3-31 type[2]
	ON		600ohms Lines	–32 dB (19.5 mV)	–20 dB (77.5 mV)	+10 dB (2.45 V)	
CH INPUT (Hi-Z) (CH1~4)	OFF	10 kohms	50~600ohms Mics	–52 dB (1.95 mV)	–40 dB (7.75 mV)	–10 dB (245 mV)	Phone jack (TRS)[2]
	ON		600ohms Lines	–22 dB (61.6 mV)	–10 dB (245 mV)	+20 dB (7.75 V)	
MIC INPUT (CH5•6)		3 kohms	50~600ohms Mics	–62 dB (0.616 mV)	–50 dB (2.45 mV)	–20 dB (77.5 mV)	XLR-3-31 type[2]
LINE INPUT (CH5) (1, 2)		10 kohms	600ohms Lines	–22 dB (61.6 mV)	–10 dB (245 mV)	+20 dB (7.75 V)	Phone jack[3]
INST INPUT (CH6) (1, 2)		470 kohms	1 kohms	–42 dB (6.16 mV)	–30 dB (24.5 mV)	0 dB (0.775 V)	Phone jack[3]
AUX IN		10 kohms	600ohms Lines	–22 dB (61.6 mV)	–10 dB (245 mV)	+20 dB (7.75 V)	Phone jack[3]
TAPE IN (1, 2)		10 kohms	600ohms Lines	–22 dBV (79.4 mV)	–10 dBV (316 mV)	+17.8 dBV (7.76 V)	RCA phono jack[3]

1. Sensitivity is the lowest level that can produce an output of +4 dB (1.23 V) or the nominal output level when the unit is set at maximum gain. (All level controls are at maximum position.)
2. Balanced (T=Hot, R=Cold, S=Gnd)
3. Unbalanced

• 0 dB=0.775 Vrms, 0 dBV=1 Vrms.

● Output specifications

Output connectors	Actual source impedance	Nominal impedance	Output level		Connector type
			Nominal	Max. before cliping	
POWER AMP OUT (1•2) (A, B)	0.1ohms	4/8ohms Speaker	60 W/4ohms	(300 W/4ohms)	Phone jack
BRIDGE OUT	0.1ohms	8ohms Speaker	120 W/8ohms	(600 W/8ohms)	Phone jack
MAIN OUT	600ohms	10 kohms Lines	+4 dB (1.23 V)	+20 dB (7.75 V)	Phone jack
MONITOR OUT	600ohms	10 kohms Lines	+4 dB (1.23 V)	+20 dB (7.75 V)	Phone jack
EFFECT OUT	600ohms	10 kohms Lines	+4 dB (1.23 V)	+20 dB (7.75 V)	Phone jack
REC OUT (1, 2)	600ohms	10 kohms Lines	–10 dBV (316 mV)	+10 dBV (3.16 V)	RCA phono jack

• All output jacks are unbalanced.
• 0 dB=0.775 Vrms, 0 dBV=1 Vrms.

For European Model
Purchaser/User Information specified in EN55103-1 and EN55103-2.
Inrush Current: 56A
Conformed Environment: E1, E2, E3 and E4

■ DIMENSIONS

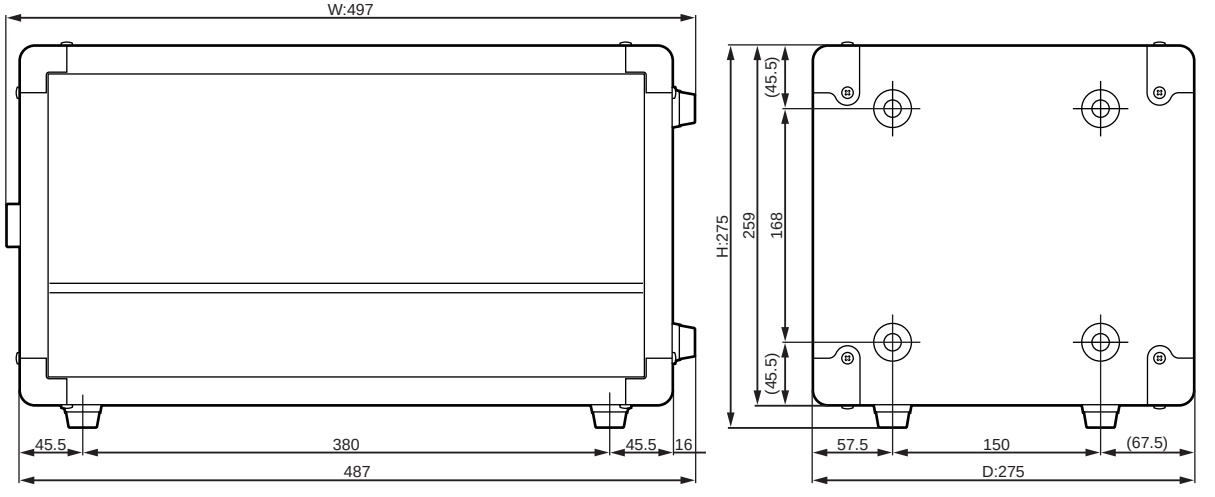

Units: mm

■ PANEL LAYOUT

• Control panel

Channel section

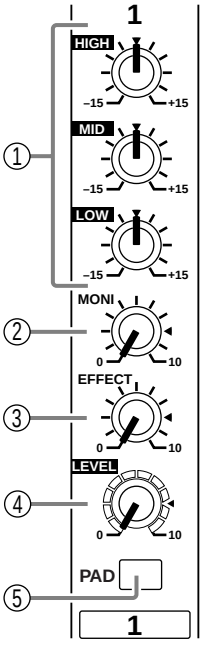

① Equalizer controls (HIGH, MID, LOW)
② Monitor controls (MONI)
③ Effect control (EFFECT)
④ Level control (LEVEL)
⑤ Pad switch (PAD) (Channel 1-4 only)

DIGITAL EFFECT section

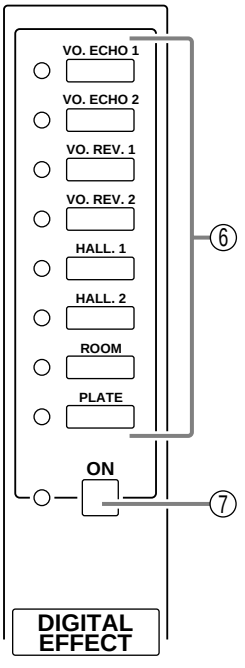

MONITOR section

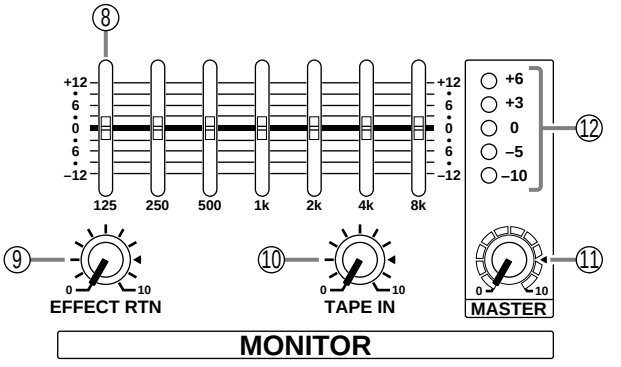

⑧ Graphic equalizer
⑨ EFFECT RTN control
⑩ TAPE IN control
⑪ MASTER control
⑫ Peak level indicator

⑥ Effect select switch and indicator
⑦ DIGITAL EFFECT ON switch and indicator

MAIN section

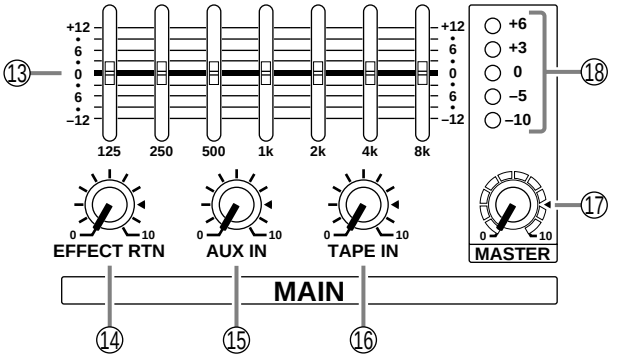

⑬ **Graphic equalizer**
⑭ **EFFECT RTN control**
⑮ **AUX IN control**
⑯ **TAPE IN**
⑰ **MASTER control**
⑱ **Peak level indicator**

POWER AMP section

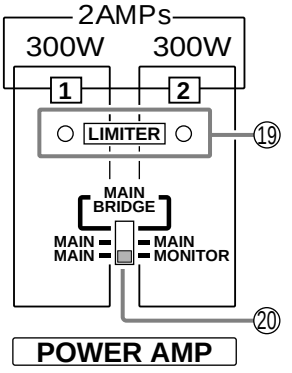

⑲ **LIMITER indicator**
⑳ **Power amp select switch**

POWER indicator & PHANTOM section

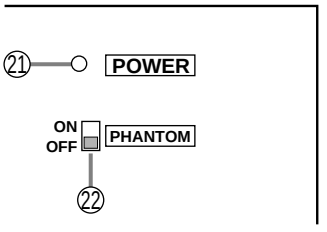

㉑ **POWER indicator**
㉒ **PHANTOM switch**

Input/Output panel

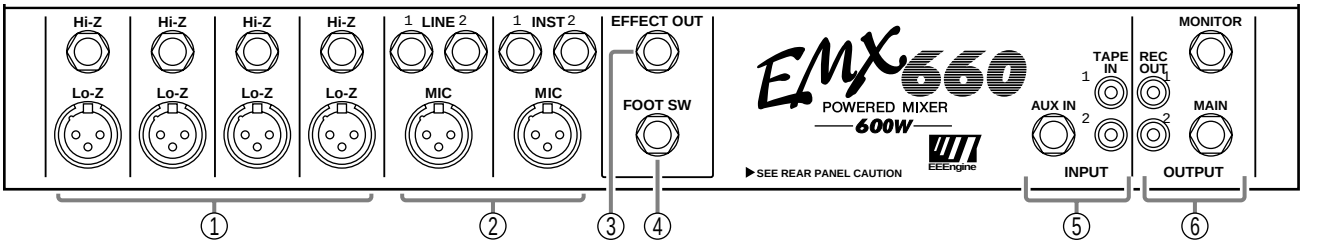

① Hi-Z, Lo-Z input jacks
② MIC, LINE, INST input jacks
③ Effect output jack (EFFECT OUT)
④ Foot switch jack (FOOT SW)
⑤ External input jacks (AUX IN/TAPE IN)
⑥ External output jacks
(REC OUT/MONI-TOR/MAIN)

• Rear panel

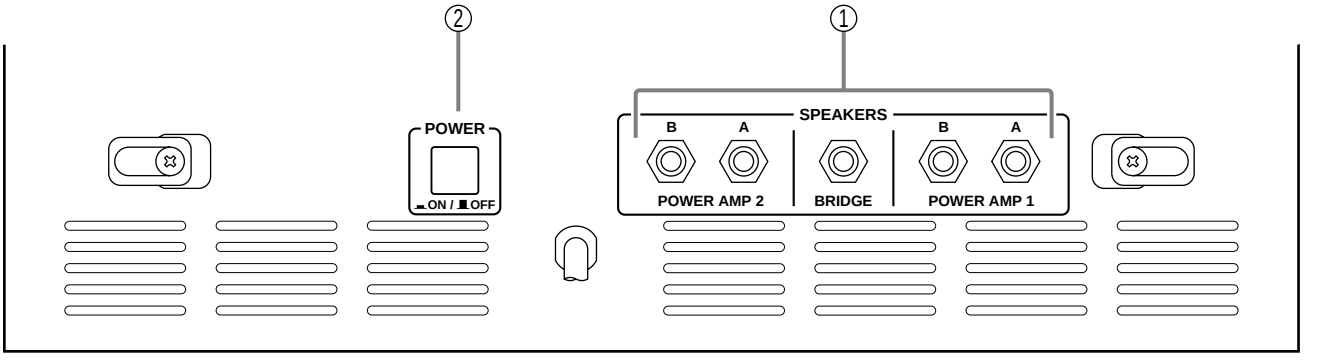

① Speaker output jacks (POWER AMP 1 A/B,
POWER AMP 2 A/B,BRIDGE)
② Power switch

BLOCK & LEVEL DIAGRAM

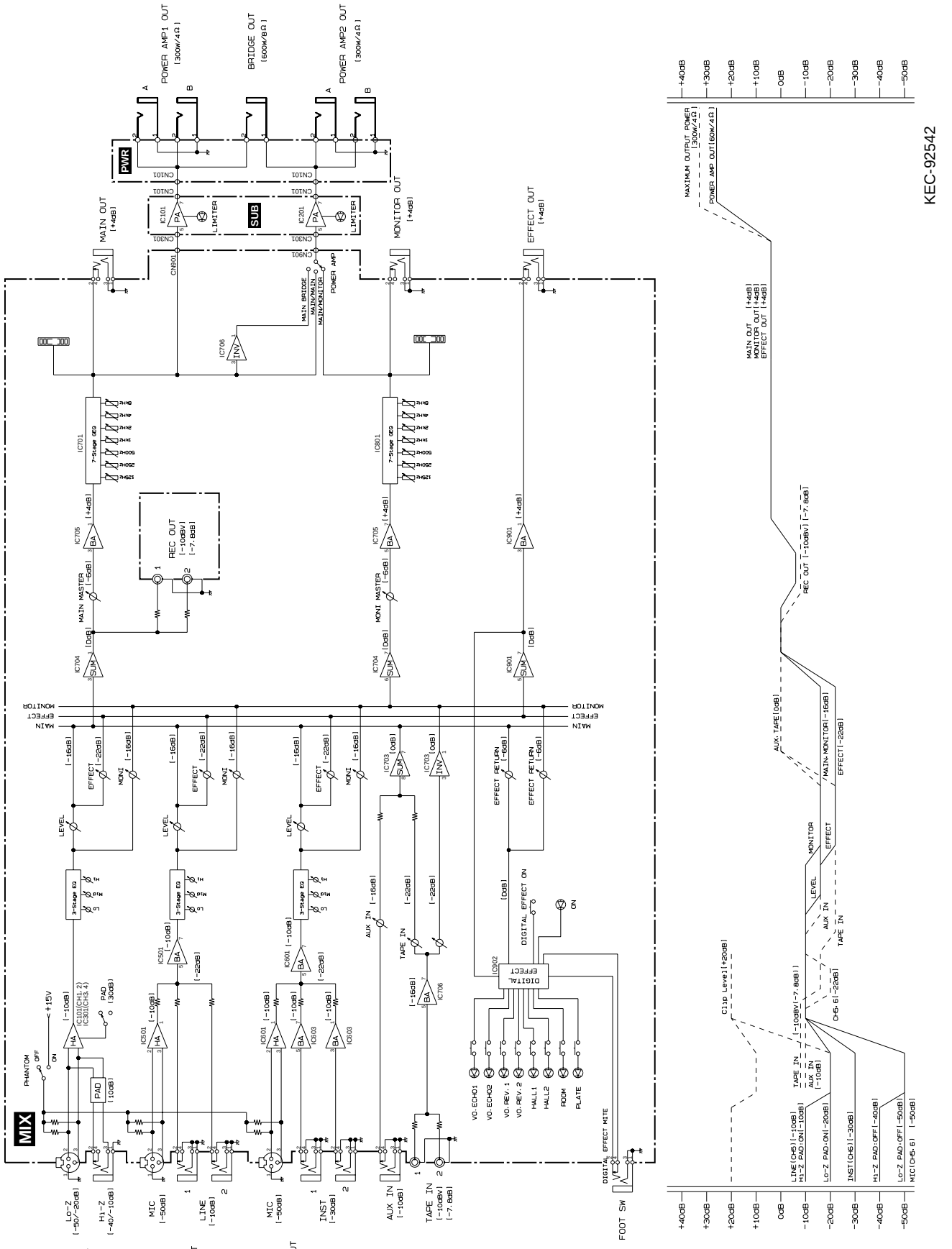

KEC-92542

■ CIRCUIT BOARD LAYOUT

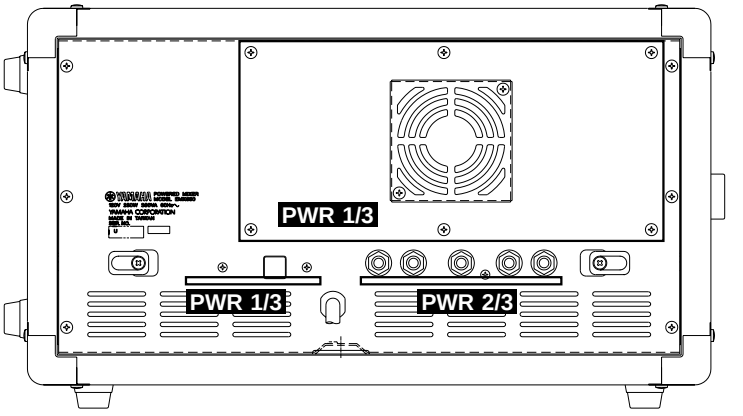

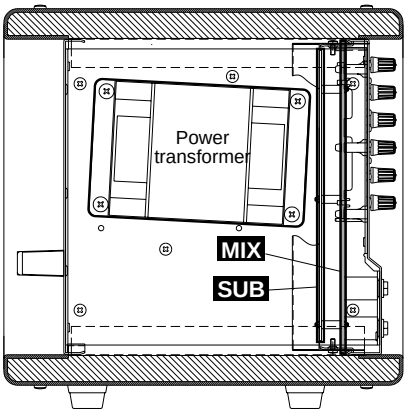

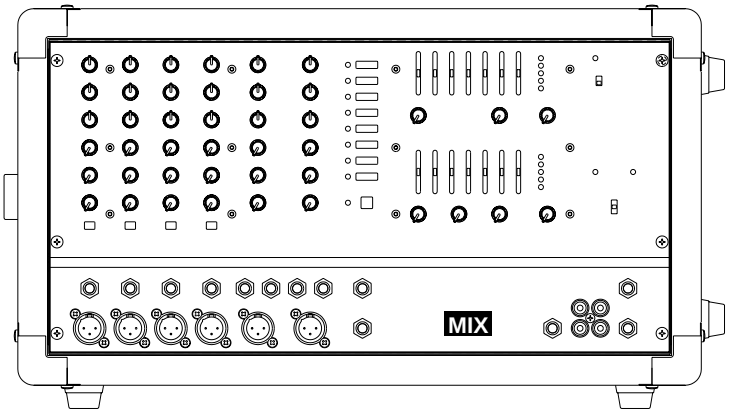

DISASSEMBLY PROCEDURE

1 MIX circuit board

1-1 Remove the six (6) screws marked [30]. The panel assembly can then be removed. (Fig. 1)

1-2 Remove the four (4) screws marked [P130]. The shield case can then be removed. (Fig. 1)

1-3 Remove the forty-three (43) knobs, the thirteen (13) special hexagonal nuts and the thirteen (13) screws marked [P90]. (Fig. 1)

1-4 Remove the twelve (12) screws marked [P40]. The MIX circuit board can then be removed. (Fig. 1)

2 SUB circuit board

2-1 Remove the panel assembly. (See Procedure 1.)

2-2 Remove the shield case. (See Procedure 1.)

2-3 Remove the SUB circuit board from the seven(7) spacer supports marked [P110]. (Fig. 1)

• Right side view

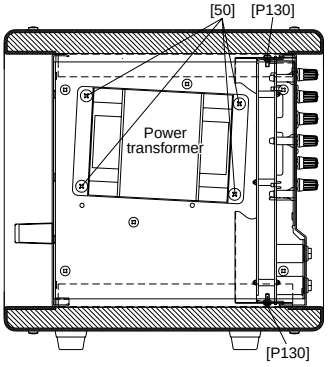

• Front panel

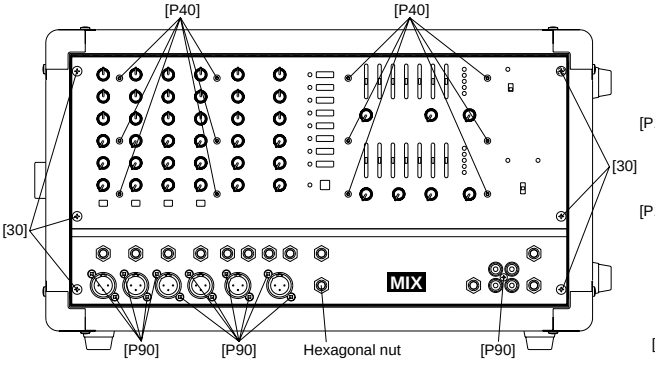

• Left side view

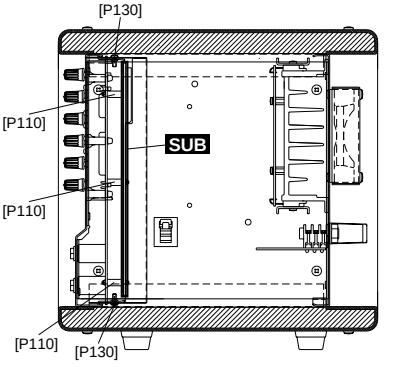

• Rear panel

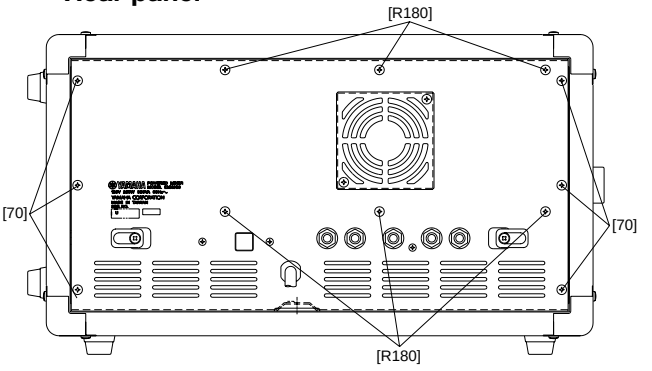

[30]: Bind Head Screw 4.0X8 MFZN2BL (EG340360)
[50]: Bind Head Screw SP 5.0X10 MFZN2BL (VU688100)
[70]: Bind Head Screw 4.0X8 MFZN2BL (EG340360)
[P40]: Hexagonal Button Screw-P 3X25 MFZNBL (V3289800)
[P90]: Bonding Tapping Screw-B 3.0X8 MFZN2BL (VN413300)
[P130]: Bonding Tapping Screw-B 3.0X8 MFZN2BL (VN413300)
[R180]: Bind Head Tapping Screw-B 4.0X8 MFZN2BL (EG340190)

Fig.1

3 PWR 1/3 circuit board

3-1 Remove the panel assembly. (See Procedure 1.)
3-2 Remove the two (2) connectors from the power transformer and the six (6) screws marked [70]. The rear assembly can then be removed. (Fig. 1)
3-3 Remove the six (6) screws marked [R180]. The power unit can then be removed. (Fig. 1)
3-4 Remove the sixteen (16) screws marked [R90]. TR support angle A/B can then be removed. (Fig. 2)
3-5 Remove the six (6) screws marked [R40]. The PWR circuit board 1/3 can then be removed. (Fig. 2)

• **Power unit**

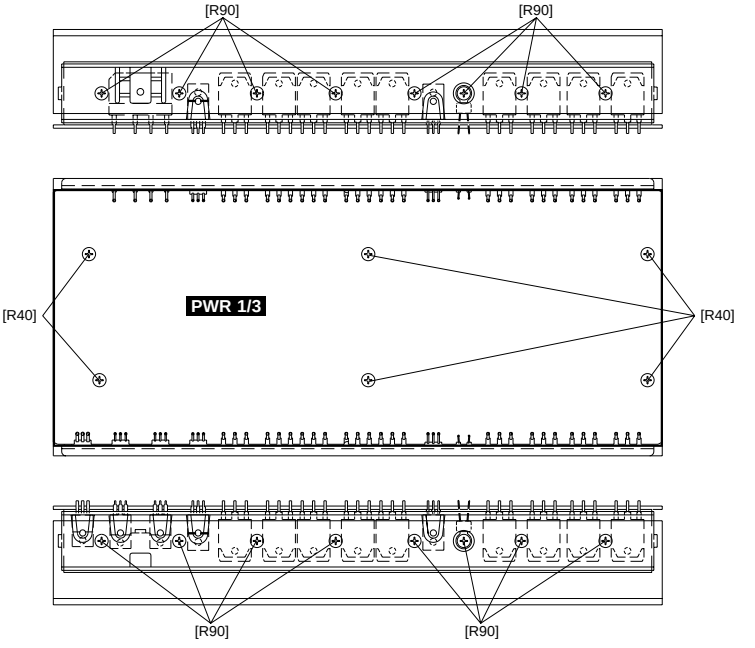

[R40]: Bind Head Screw SP 3.0X8 MFZN2Y (EG330290)
[R90]: Bind Head Tapping Screw-B 3.0X12 MFZN2BL (VQ074600)

Fig.2

4 PWR 2/3 circuit board

4-1 Remove the panel assembly. (See Procedure 1.)
4-2 Remove the rear assembly. (See Procedure 3.)
4-3 Remove the screw marked [R210] and the five (5) “special screws b”. The PWR 2/3 circuit board can then be removed. (Fig. 3)

5 PWR 3/3 circuit board

5-1 Remove the panel assembly. (See Procedure 1.)
5-2 Remove the rear assembly. (See Procedure 3.)
5-3 Remove the two (2) screws marked [R150] and then remove the PWR 3/3 circuit board with the switch bracket. (Fig. 3)
5-4 Remove the two (2) screws marked [R140] and the screw marked [R150a] from the switch bracket. The PWR 3/3 circuit board can then be removed. (Fig. 3)

6 Motor fan

6-1 Remove the panel assembly. (See Procedure 1.)
6-2 Remove the rear assembly. (See Procedure 3.)
6-3 Remove the power unit. (See Procedure 3.)
6-4 Remove the two (2) screws marked [R120]. The motor fan can then be removed. (Fig. 3)

7 Power transformer

7-1 Remove the panel assembly. (See Procedure 1.)
7-2 Remove the rear assembly. (See Procedure 3.)
7-3 Remove the four (4) screws marked [50]. The power transformer can then be removed. (Fig. 1)

• **Front panel**

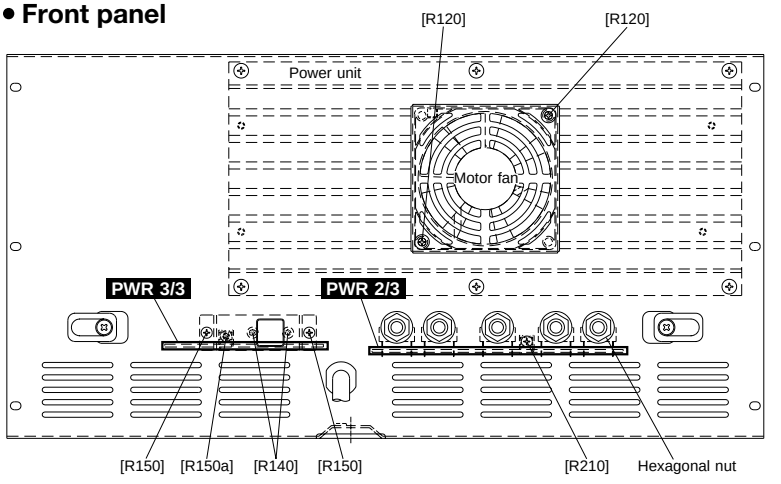

[R120]: Bind Head Screw 3.0X30 ZMC2BL (VT520200)
[R140]: Bind Head Screw 3.0X8 MFZN2BL (VB659000)
[R150a]: Bonding Tapping Screw-B 3.0X8 MFZN2BL (VN413300)
[R150]: Bonding Tapping Screw-B 3.0X8 MFZN2BL (VN413300)
[R210]: Bonding Tapping Screw-B 3.0X8 MFZN2BL (VN413300)

Fig.3

■ LSI PIN DESCRIPTION

● **ZFX-2** (XY297A00) **DSP**

SUB: IC306

PIN NO.	NAME	I/O	FUNCTION	PIN NO.	NAME	I/O	FUNCTION
1	ED2	I/O	External Memory and I/O Data Bus	51	HX/SDA	I/O/Z	Host Interface Data Output/I2C Bus Data
2	ED3	I/O		52	/EMPTY	O/Z	CMEM Update Buffer and HR Resistor Empty Flag Output
3	ED4	I/O		53	AXLR2	I	Audio Data Transmit Unit 2/3 Left and Right Channel Frame Frequency Signal
4	ED5	I/O		54	AR1	I	Audio Data Receive Unit 1 Data Input
5	ED6	I/O		55	AR2	I	Audio Data Receive Unit 2 Data Input
6	ED7	I/O		56	HRBCK/SA0	I	Host Interface Receive Clock / I2C Bus Address 0
7	VSS	-	Ground	57	HR/SA1	I	Host Interface Data Input/ I2C Bus Address 1
8	VDD	-	Power Supply	58	HRS/SA2	I	Host Interface Receive Data Frame Frequency Signal/ I2C Bus Address 2
9	CLKM0	I	Clock Mode	59	VSS	-	Ground
			(CLKM0: 0 1 0 1; CLKM1: 0 0 1 1 — 1 min. / 3fold / 5fold / PLL BYPASS)	60	VDD	-	Power Supply
10	CLKM1	I		61	HXBCK/SCL	I	Host Interface Transmitt Clock/ I2C Bus Clock
11	TMS	I	TAP(Test Access Port) Mode Select	62	HXS/SA3	I	Host Interface Transmitt Data Frame Frequency Signal/ I2C Bus Address 3
12	TDI	I	TAP Data Input	63	/CS/SA4	I	Host Interface Chip Select/ I2C Bus Address 4
13	TCK	I	TAP Clock	64	HBCKS/SA5	I	HRBCK/HXBCK Active Edge Select/ I2C Bus Address 5
14	CLKIN	I	Master Clock	65	I²CSEL	I	Host Interface Mode Select
15	VSS	-	Ground	66	VSS	-	Ground
16	VDD	-	Power Supply	67	VDD	-	Power Supply
17	CLKO	O	Machine Clock Output	68	AXBC1	I	Audio Data Transmitt Unit 1 bit Clock
18	EA12/ED8	I/O	External SRAM and ROM Address Bus/ External DRAM and I/O Data Bus	69	AXBC2	I	Audio Data Transmitt Unit 2/3 bit Click
19	EA13/ED9	I/O		70	AXLR1	I	Audio Data Transmitt Unit 1 Left and Right Channel Frame Frequency Signal
20	EA14/ED10	I/O		71	DIV8	O	Machine Clock Output then 8 min.
21	EA15/ED11	I/O		72	/LAV	O	Ruch ALU Overflow Frag Output
22	VSS	-	Ground	73	/LMV	O	Ruch MAC Overflow Frag Output
23	VDD	-	Power Supply	74	/DRDY	O/Z	Host Interface Transmitt Data Ready Frag Output
24	EA16/ED12	I/O	External SRAM and ROM Address Bus/ External DRAM and I/O Data Bus	75	EMU0	I/O/Z	Emurator Interrupt 0
25	EA17/ED13	I/O		76	EMU1	I/O/Z	Emurator Interrupt 1
26	EA18/ED14	I/O		77	TDO	O/Z	TAP(Test Access Port) Data Output
27	EA19/ED15	I/O		78	DIV512	O	Machine Clock then512 min.
28	EA4/ED16	I/O	External Memory Address Bus/ External I/O Data Bus	79	ARLR1	I	Audio Data Receive Unit 1 Left and Right Channel Frame Frequency Signal
29	EA5/ED17	I/O		80	ARLR2	I	Audio Data Receive Unit 2 Left and Right Channel Frame Frequency Signal
30	EA6/ED18	I/O		81	HDIR/SA6	I	Host Interface Data Format Select/ I2C Bus Address 6
31	EA7/ED19	I/O		82	SEL5V3V	I	Input Level Control
32	VSS	-	Ground	83	/MUTE	I	Mute Control
33	VDD	-	Power Supply	84	/TRST	I	TAP(Test Access Port) Reset
34	EA8/ED20	I/O	External Memory Address Bus/ External I/O Data Bus	85	/RS	I	Hardware Reset
35	EA9/ED21	I/O		86	VSS	-	Ground
36	EA10/ED22	I/O		87	VDD	-	Power Supply
37	EA11/ED23	I/O		88	/IOE	O	External I/O Enable
38	TEST0	I	Test Mode Control	89	/RAS/SRCS	O	External DRAM Low Address Strove/External SRAM Chip Select
39	TEST1	I		90	/CAS/SROE	O	External DRAM Column Address Strove/External SRAM Output Enable
40	TEST2	I		91	/ROME	O	External ROM Enable
41	TEST3	I		92	/WE	O	External Memory and I/O Wright Enable
42	/BIO	I	Separate Control Input	93	EA0	O	External Memory and I/O Address Bus
43	/INT1	I	Interrupt 1	94	EA1	O	
44	ARBC1	I	Audio Data Receive Unit 1 bit Clock	95	EA2	O	
45	ARBC2	I	Audio Data Receive Unit 2 bit Clock	96	EA3	O	
46	AX1	O	Audio Data Transmitt Unit 1 Data Output	97	VSS	-	Ground
47	AX2	O	Audio Data Transmitt Unit 2 Data Output	98	VDD	-	Power Supply
48	AX3	O	Audio Data Transmitt Unit 3 Data Output	99	ED0	I/O	External Memory and I/O Data Bus
49	VSS	-	Ground	100	ED1	I/O	
50	VDD	-	Power Supply				

Z: High inpedance

● **PCM3001E** (XY282A00) **ADA** SUB: IC305

PIN NO.	NAME	I/O	FUNCTION	PIN NO.	NAME	I/O	FUNCTION
1	VINL	I	ADC Analog input, L ch	15	VOUTL	O	DAC Analog Output, L ch
2	Vcc1	-	ADC Analog Power Supply	16	LRCIN	I	Sampling Clock Input (fs)
3	AGND1	-	ADC Analog Ground	17	BCKIN	I	Bit Clock Input
4	VREFL	-	ADC Reference decuple, L ch	18	DIN	I	Audio Data Input
5	VREFR	-	ADC Reference Decuple, R ch	19	DOUT	O	Audio Data Output
6	VINR	I	ADC Analog input, R ch	20	XTI	I	Crystal Oscillator Input, External System Clock Input
7	CINPR	-	ADC Unch areasing Filter Capacitor (+), R ch	21	XTO	O	Crystal Oscillator Output
8	CINNR	-	ADC Unch areasing Filter Capacitor (-), R ch	22	CLKIO	I/O	Crystal Oscillator Buffer Output, Externak System Clock Input
9	CINNL	-	ADC Unch areasing Filter Capacitor (-), L ch	23	VDD	-	Digital Power Supply
10	CINPL	-	ADC Unch areasing Filter Capacitor (+), L ch	24	DGND	-	Digital Ground
11	VCOM	-	DAC Center Power Supply Decuple	25	FMT2	I	Audio Data Format 2 (1)
12	VOUTR	O	DAC Analog Output, R ch	26	FMT1	I	Audio Data Format 1 (1)
13	AGND2		DAC Analog Ground	27	FMT0	I	Audio Data Format 0 (1)
14	VCC2	-	DAC Analog Power Supply	28	RSTB	I	Reset Input, Active ”L”

IC BLOCK DIAGRAM

● **NJM2068L-D**(XM356A00)
● **NJM4558L-D**(XQ212A00)
● **N5238AP**(XM085A00)

MIX: IC101, IC102, IC301, IC302, IC501, IC502, IC601, IC603, IC703, IC704, IC705, IC706, IC901
SUB: IC101, IC201, IC304
OP AMP

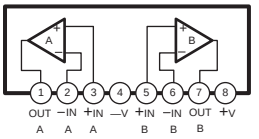

● **M5229P**(XG203A00)

MIX: IC701, IC801
7Seg Grafic

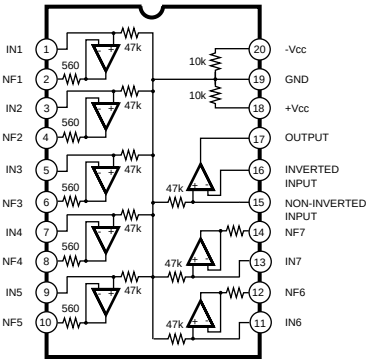

● **BA6137**(XA534A00)

MIX: IC702, IC802
LED Driver

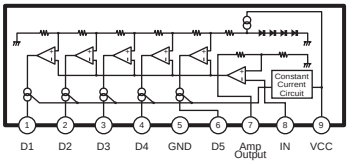

● **TC74HC138AP**(IR013800)

MIX: IC902
DECO-8

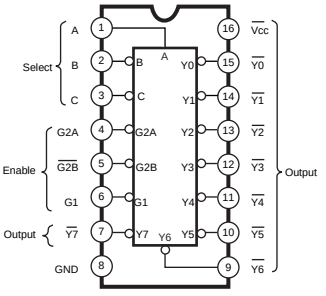

● **TC74HCU04AP**(IG142200)

SUB: IC302
Inverter

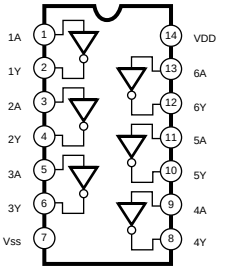

INSPECTIONS

1. Measuring Instruments

Low Frequency Oscillator:	Balance Output, Output Impedance = 150 ohms
Oscilloscope:	Input Impedance ≧ 100 kohms
Level Meter:	Input Impedance ≧ 100 kohms

Note: Use a balance input measuring instrument
: Signal level 0 dBs = 0.775V

2. Mixer Part

2-1 Setting Conditions

Setting conditions are as follows unless otherwise specified.

2-2 Input and Output Load

Input Signal:	1 kHz, sine wave (Rs = 150 ohms)
Load:	All output terminals have a 10 k ohms load

2-3 Control Panel Setting

Channel Input (CH1-CH4) Section

EQ (HIGH, MID, LOW) level controls:	Center
MONITOR level control:	Maximum
EFFECT level control:	Maximum
LEVEL:	Maximum
PAD:	OFF

Channel Input (CH5-CH6) Section

EQ (HIGH, MID, LOW) level controls:	Center
MONITOR level control:	Maximum
EFFECT level control:	Maximum
LEVEL:	Maximum

EFFECT Section

DIGITAL EFFECT ON switch	OFF

MAIN Section

GRAPHIC EQUALIZER (7 band) Fader:	Center
EFFECT RTN level control:	Maximum
AUX IN:	Maximum
TAPE IN:	Maximum
MASTER (MAIN):	Maximum

MONITOR Section

GRAPHIC EQUALIZER (7 band) Fader:	Center
EFFECT RTN level control:	Maximum
TAPE IN Level control:	Maxmum
MASTER (MAIN) level control:	Maximum

Others

PHANTOM ON/OFF switch	OFF
POWER AMP switch	MAIN/MONITOR

2-4 Gain

Each output gain should be as shown in the table below.

Table 1 [Units: dBs]

Input Terminal	Input Level	MAIN OUT	MONITOR OUT	EFFECT OUT	REC OUT
Lo-z	-32	+4± 2	+4± 2	+4± 2	+13.8± 2
MIC	-32(PAD ON)				
Hi-Z	-52	+4± 2	-	-	-
LINE	-22	+4± 2	-	-	-
INST	-42	+4± 2	-	-	-
AUX	-22	+4± 2	-	-	-
TAPE	-22	+4± 2	-	-	-

2-5 Frequency Response

When the input signal frequency is set to 20 Hz and 20 kHz in Tables 1, each output terminal level should fall within the range of +1 and -3 dB, using 1 kHz as the reference.

2-6 Equalizer Characteristics

When LOW, MID, HIGH GAIN VR's of CH1-6 are moved, the output level in each frequency obtained at MAIN OUT and MONITOR OUT should be in the range shown in the table below, using the output level at the center click position as reference. If the output level is not within the range as shown in the table, vary the specified frequency of the input signal within ±20% range and check that the output level as shown in the table below can be obtained.

Table 2 [Units: dBs]

EQ Controls	GAIN	Frequency	Response
LOW	Maximum	80 Hz	+12 ± 2
	Minimum		+12 ± 2
MID	Maximum	2.5 kHz	+14 ± 2
	Minimum		- 14 ± 2
HIGH	Maximum	12 kHz	+12 ± 2
	Minimum		+12 ± 2

2-7 Graphic Equalizer Characteristics

When setting of the fader of the graphic equalizer is varied to the maximum and minimum positions, the output response for each frequency obtained at MAIN OUT and MONITOR OUT should be in the range shown in the table below using the output level at the center click position as a standard.
If the output level is not within the range as shown in the table, vary the specified frequency of the input signal within ±20% range and check that the output level as shown in the table below can be obtained.

Table 3 [Units: dBs]

		Input signal frequency and Fader name						
		125 Hz	250 Hz	500 Hz	1 kHz	2 kHz	4 kHz	8 kHz
Response	Maximum	+12 ± 2						
	Minimum	-12 ± 2						

2-8 Meter LED

When the MAIN OUT and MONITOR OUT output levels are as shown in the table below, each corresponding METER LED light should light up.

Table 4 [Units: dBs]

LED Name	Lighting Level
+6	+10 ± 2
+3	+7 ± 2
0	+4±2
-5	-1 ± 2
-10	-6 ± 2.5

2-9 Distortion

Set each volume control of the INPUT section and MASTER section to Nominal in Tables 1. When each output except the REC OUT level reaches +14 dBs, the distortion ratio should be less than 0.3 %.

2-10 Maximum Output Level

In the states of 2-9, the maximum output levels of MAIN OUT, MONITOR OUT and EFFECT OUT should be +20 dBs with a distortion of less than 1%.

2-11 Equivalent Input Noise

With the level volume of the channel being measured only set to the maximum position and those of other channels set to the minimum position and the input terminals of Lo-z and MIC shorted with 150ohms, check that the noise level at MAIN OUT is -58dBs or less (but -56dBs or less for CH6). If the noise level exceeds the specified value, check the converted input noise level at each channel. The acceptable level is -124dBs or less for CH1 to CH5 and -122 dBs or less for CH6. (Use DIN AUDIO FILTER.)

2-12 Residual Noise

Set all the input level controls at minimum in the states of 2-3. When the MASTER and EFFECT OUT level controls in the MAIN and MONITOR section are changed to maximum or minimum, the residual noise should be as shown in the table below.

Table 5 [Unit: dBs]

MASTER VOLUME	MAIN OUTPUT	MONITOR OUT	EFFECT OUT
Maximum	-71	-71	-73
Minimum	-88	-88	–

2-13 Phantom Power

Connect a load resistance of 2.7 K ohm (more than 1W) between pins 1 and 2 of both the Lo-z IN and the MIC IN input terminals, then short between pins 2 and 3 of the Lo-z IN and the MIC IN input terminal.
When the PHANTOM switch is turned on, +10 ± 1.5 V should be obtained between both ends of the load resistance.

2-14 Digital Effect

Turn on the power while pressing VO.ECHO1 and ON switches simultaneously and check that the ON LED light flashes. Input a -42dBs/1KHz signal to the CH6 INST, set the EFFECT level control and LEVEL control to the maximum position, and also set MASTER and EFFECT volumes of the MONITOR to the maximum position. Then check the signal level at the MONITOR OUT by selecting the PGM switch as described in Table 6 below.

Table 6 [Unit: dBs]

PGM Switch	Operation	Check for: (at MONITOR OUT)
VO. ECHO1	Press ON SW.	No output (-53dBs or less) [DIN AUDIO]
VO. ECHO2	Set LEVEL control to min. position.	-53dBs or less [DINdBsDIO]
VO.REV.1	-	Output obtained
VO.REV.2	-	Output not obtained (-53dBs or less) [DIN AUDIO]
HALL1	Depress FOOT SW.	-30dBs or less [DIN AUDIO] and full output are repeated every time FOOT SW is depressed.
HALL2	-	Output not obtained (-53dBs or less) [DIN AUDIO]
ROOM	-	4.2 ±1dB attenuated from full output
PLATE	-	+10 ±3dBs of full output

Check that the LED light lights up when each PGM switch is selected.
Also, check that the EFFECT is applied when the music source (vocal, etc.) is input.

2-15 Stability

When a capacitor of 10 μF to 0.1 uF is connected in parallel to the loading resistor at each SPEAKER OUT terminal, or when all VR and EQ control volumes are set to MAX , there should be no abnormality; for example, there should be no oscillation. Especially, check that no oscillation occurs even if the EQ HIGH is at maximum.

3. Power Amplifier Part

3-1 Setting Conditions

Setting conditions are as follows unless otherwise specified.

Input terminal:	INPUT CH5 LINE1
POWER AMP switch:	MAIN-MONITOR
Output terminal:	POWER AMP 1A, POWER AMP 2A
Output Load:	4 ohm (more than 300W) Connect the load resistor of SPEAKER OUT only when inspecting the power amplifier section unless otherwise specified.
INPUT CH1 - 4, CH6	
LEVEL control:	Minimum

3-2 Power ON Muting

The muting relay should be released 2.5 +/- 1 seconds after the power switch is turned on.

3-3 Speaker Terminal DC Voltage

When input terminals are grounded, confirm that each output terminal voltage is 0 +/- 100 mV.

3-4 Gain

Check that +22 ± 2.0dBs output voltage is obtained when a -26dBs signal is input to the input terminal. Perform the same check under the setting conditions of POWER AMP switch at MAIN-MAIN and the output terminals at POWER AMP 1G and POWER AMP 2B.

3-5 Frequency Response

Apply a -26dBs signal to the input terminal and check that the output voltage when the signal frequency is 20Hz and 20kHz is within +1 and -3dB ranges respectively, using the output voltage at 1kHz as reference.

3-6 Harmonic Distortion

Apply a 1 kHz sine wave signal to the input; the output level should be 300 W/4 ohms (33.0 dBs/ch); the distortion ratio should be less than 0.5 %.
Apply a sine wave signal of 20 Hz, 1 kHz and 20 kHz separately to the input; the output level should be 150 W/4 ohms (30.0 dBs); the distortion ratio should be less than 0.5 %.
Do this inspection within 30 seconds.

3-7 Residual Noise

Set the MASTER level controls (MONITOR and MAIN) at minimum; the residual noise at the output terminal should be less than -65 dBs.
Note: Use DIN-AUDIO filter.

3-8 Stability

Apply a 10 kHz -26 dBs rectangular signal to the input and connect a capacitor (10 pF to 0.47 μF) parallel to the 4 ohm load resistor, or connect an inductor (10 μH to 0.47 H) serial to the 4 ohms load resistor. Confirm that the output signal is as illustrated below.

Overshoot: Vp/Vo ≦ 1.8
Ringing: 5 waves and less than 5 waves

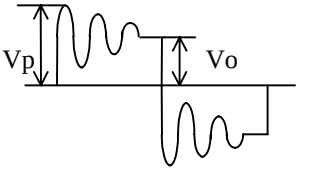

Next, only connect a capacitor (10 pF to 0.47μF) to the SPEAKERS terminal as a load, and confirm that the output is as follows:

Overshoot: Vp/Vo ≦ 2.5
Ringing: It should end within 7 waves; there is no oscillation.

3-9 Protection

Apply a 10 Hz sine wave signal to the input; increase the input signal so that the output signal is clipped. Confirm that the protection function operates and that the speaker relay does not open.
When a 1 Hz, 6 Vp-p (8.7 dBs) sine wave signal is applied to the input, confirm that the protection function operates within 2 seconds and the speaker relay is turned off. When the input signal is turned off, confirm that the protection function stops and the speaker relay automatically turns on within 5 seconds.

3-10 PC Limiter and Limiter

Apply a 1 kHz -20 dBs sine wave signal to the input and then connect a 1 ohm (+/- 5% 100 W) resistor; confirm that the output signal is Vp-p $\leqq$ 25V and that the signal is not rectangular.

3-11 LIMITER Indicator

When a 1 kHz -10.8 dBs sine wave signal is applied to the input, the LIMITER indicator should light up.

3-12 Efficiency

When the output of POEWR AMP1 and 2 is adjuster to 12.2V (24.0 dBs), confirm that the primary power is 180 +/- 50W.

4. Main Bridge

4-1 Setting Conditions

Input Terminal:	INPUT CH 5 LINE 1
POWER AMP switch:	MAIN BRIDGE
Measuring Output Terminal:	BRIDGE
Output Load:	8 ohm (more than 600 W)

INPUT CH 1- 4, CH 6
LEVEL level control: Minimum

Note: Other control settings are the same as those for the mixer in section 2-3.

4-2 Connection

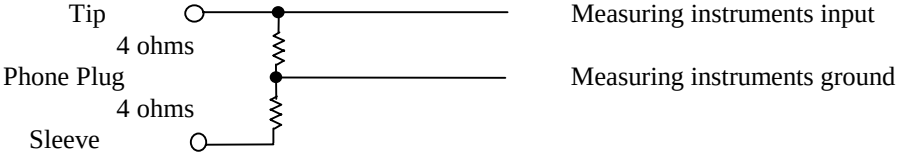

4-3 Gain

Apply a 1 kHz -26.0 dBs sine wave signal to the input; confirm that the output levels is are +22.0 ± 2 dBs.

4-4 Frequency Response

Apply a -26dBs signal to the input terminal and check that the output voltage when the signal frequency is 20Hz and 20kHz is within +1 and -6dB ranges respectively, using the output voltage at 1kHz as reference.

5. Power Supply Fluctuation

There should be no operational problems when the power voltage is varied within +/- 10% of the nominal voltage.

TROUBLE SHOOTING

Problem		Cause	Action
Sound is no longer output from the speakers.	The POWER indicator is dark.	The load on this device was too great, and the **protection circuit for the internal transformer has operated**. Possible reasons for the excessive load are an excessive input to the device, or inappropriate ventilation.	Please wait. When the device cools off, normal operation will resume automatically. However, please check the following two points to prevent the problem from recurring. If the input to this device is greater than the nominal level, lower the input to the nominal level. If the device is not ventilated sufficiently, refer to the cautions given at the beginning of this manual and take appropriate measures to insure adequate ventilation.
	The POWER indicator is lit.	The load on the amplifier of this device was too great, and the **protection circuit for the amplifier has operated**. Possible reasons for the excessive load are an excessive level setting in the channel control section or main section, insufficient ventilation, or insufficient load impedance of the connected speakers.	Please wait. When the device cools off, normal operation will resume automatically. However, please check the following three points to prevent the problem from recurring. If the level setting is excessive, lower it to the nominal level. You can refer to the peak level indicators of the main section when doing so. If the device is not ventilated sufficiently, refer to the cautions given at the beginning of this manual and take appropriate measures to insure adequate ventilation. If the load impedance (including a short) is too low, and change the connections so that the impedance is correct.
	Other	Connections between devices have come loose.	Inspect the connections, and correct any faulty connections.
		Other	The device may have malfunctioned.

POWERED MIXER

EMX660

PARTS LIST

CONTENTS

OVERALL ASSEMBLY 2
ELECTRICAL PARTS 5

Notes : DESTINATION ABBREVIATIONS

A : Australian model	M : South African model
B : British model	O : Chinese model
C : Canadian model	Q : South-east Asia model
D : German model	T : Taiwan model
E : European model	U : U.S.A. model
F : French model	V : General export model (110V)
H : North European model	W: General export model (220)
I : Indonesian model	N,X : General export model
J : Japanese model	Y : Export model

WARNING

Components having special characteristics are marked ⚠ and must be replaced with parts having specification equal to those originally installed.

- The numbers “QTY” show quantities for each unit.
- The parts with “--” in “PART NO.” are not available as spare parts.
- This mark “ } ” in the REMARKS column means these parts are interchangeable.
- The second letter of the shaded ( ) part number is O, not zero.
- The second letter of the shaded ( ) part number is I, not one.

OVERALL ASSEMBLY

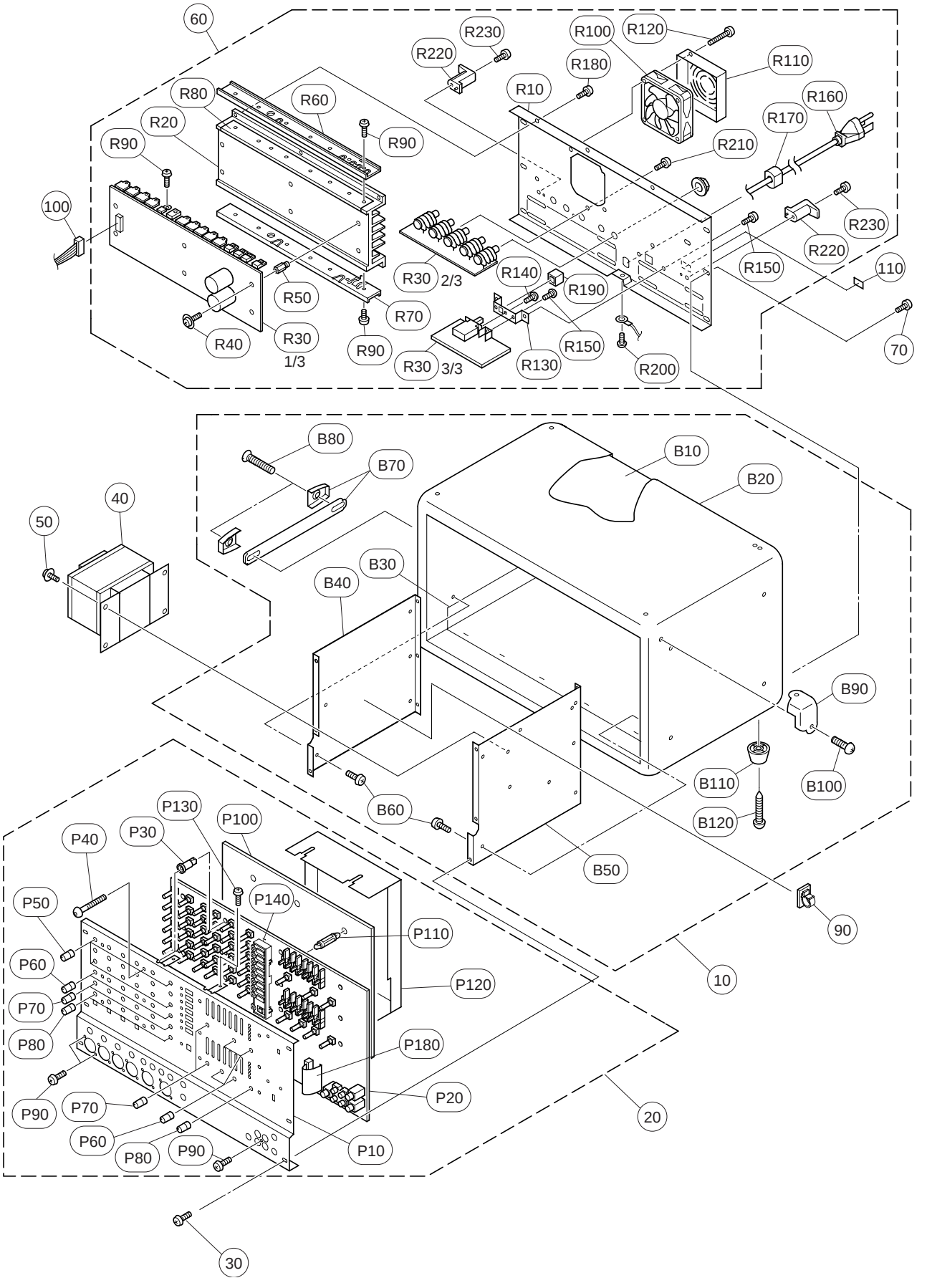

	REF NO.	PART NO.	DESCRIPTION			REMARKS	QTY	RANK
			OVERALL ASSEMBLY	EMX660		(V521540)		
		--	Overall Assembly			J (V521700)		
		--	Overall Assembly			U,V (V521720)		
		--	Overall Assembly			H,W (V521740)		
		--	Overall Assembly			B (V521760)		
		--	Overall Assembly			A (V521780)		
*	10	**V5288600**	Body Assembly					
	20	--	Panel Assembly			(V528870)		
	30	**EG340360**	Bind Head Screw	4.0X8 MFZN2BL			6	01
*	40	**XY325B00**	Power Transformer			J		
*	40	**XY326A00**	Power Transforme			U,V		
*	40	**XY327B00**	Power Transforme			H,W,B		
*	40	**XY328A00**	Power Transforme			A		
	50	**VU688100**	Bind Head Screw	SP 5.0X10 MFZN2BL			4	01
	60	--	Rear Assembly			J (V528880)		
	60	--	Rear Assembly			U,V (V528960)		
	60	--	Rear Assembly			H,W (V528970)		
	60	--	Rear Assembly			B (V528980)		
	60	--	Rear Assembly			A (V528990)		
	70	**EG340360**	Bind Head Screw	4.0X8 MFZN2BL			6	01
	90	**VZ765100**	Cord Binder	TS-0708 KSS				02
	100	--	Cord, Front	1430 #24 14P 500L		(V522900)		
	110	**VA039300**	Label			UV		03
*		**V5288600**	Body Assembly					
	B10	--	Body			(V520960)		
	B20	--	Carpet	C968		(VZ52800)		
	B30	--	Shield Sheet			(VV43470)	2	
	B40	**VV102700**	Side Plate (L)					06
	B50	--	Side Plate (R)			(V520970)		
	B60	**EG340330**	Bind Head Screw	4.0X18 MFZN2BL			10	01
	B70	**VV085400**	Glip Assembly					04
	B80	**VV435200**	Oval Head Screw	5.0X35 MFZN2BL			2	01
	B90	**VV085500**	Corner Protector				8	03
	B100	**03747270**	Truss Head Tapping Screw-1	4.0X12 MFZN2BL			16	
	B110	**VV085600**	Leg				8	01
	B120	**03747290**	Truss Head Tapping Screw-1	4.0X20 MFZN2BL			8	01
		--	Panel Assembly			(V528870)		
*	P10	**V5209800**	Front Panel					
*	P20	**V5110900**	Circuit Board	MIX				
	P30	**V3291600**	PCB Support	NEW NIFCO			12	01
	P40	**V3289800**	Hexagonal Button Screw-P	3X25 MFZNBL			12	01
	P50	**VU860200**	Knob	MX-GREEN/D-GRAY		CH1-6(HIGH,MID,LOW)	18	01
	P60	**VU859700**	Knob	N-GRAY/D-GRAY		CH1-6(MONI),	10	01
	P70	**VU860300**	Knob	MX-BLUE/D-GRAY		MONI.(TAPE IN,MASTER), MAIN(AUX IN,TAPE IN) CH1-6(EFFECT), MONI.(EFFECT RTN), MAIN(EFFECT RTN)	8	01
	P80	**VV625800**	Knob	ORANGE/D-GRAY		CH1-6(LEVEL), MAIN(MASTER)	7	01
	P90	**VN413300**	Bonding Tapping Screw-B	3.0X8 MFZN2BL			13	01
*	P100	**V5111000**	Circuit Board	SUB				
	P110	**V3224800**	Spacer Support	KCA-14 PIN GOO			7	01
	P120	--	Shield Case			(V520990)		
	P130	**VN413300**	Bonding Tapping Screw-B	3.0X8 MFZN2BL			4	01
*	P140	**V5210000**	DSP Select Button			DIGITAL EFFECT		
	P180	--	Cable, FFC	BNCDP=1.25K-35-90		(V430430)		
		--	Rear Assembly			J (V528880)		
		--	Rear Assembly			U,V (V528960)		
		--	Rear Assembly			H,W (V528970)		
		--	Rear Assembly			B (V528980)		
		--	Rear Assembly			A (V528990)		
*	R10	**V5210400**	Rear Panel			J		
*	R10	**V5210700**	Rear Panel			U,V		
*	R10	**V5211700**	Rear Panel			H,W,B		
*	R10	**V5212300**	Rear Panel			A		
	R20	--	Heat Sink			(V521290)		

*: New Parts

RANK: Japan only

	REF NO.	PART NO.	DESCRIPTION			REMARKS	QTY	RANK
*	R30	**V5227100**	Circuit Board	PWR		J		
*	R30	**V5227200**	Circuit Board	PWR		U,V		
*	R30	**V5227300**	Circuit Board	PWR		H,W,B,A		
	R40	**EG330290**	Bind Head Screw	SP 3.0X8 MFZN2Y			6	01
	R50	**VV086500**	Support	H=7.4 B=5.5			6	01
	R60	**--**	Angle A			(V521320)		
	R70	**--**	Angle B			(V521330)		
*	R80	**V5214900**	Insulation Sheet				2	
	R90	**VQ074600**	Bind Head Tapping Screw-B	3.0X12 MFZN2BL			16	01
	R100	**V2955500**	Fan	3110KL05WB50L34				08
	R110	**V2951400**	Angle Bracket, Fan					03
	R120	**VT229100**	Bind Head Screw	4.0X30 ZMC2BL			2	01
	R130	**--**	Switch Bracket			(V319280)		
	R140	**VB659000**	Bind Head Screw	3.0X8 MFZN2BL			2	01
	R150	**VN413300**	Bonding Tapping Screw-B	3.0X8 MFZN2BL			3	01
	R160	**V3277000**	AC Cord	J VCTF 2X0.75 7A		J		05
	R160	**VV205600**	AC Cord	UC SJT 3X#18 10A		U,V		06
	R160	**V3277100**	AC Cord	E H05VV-F3X0.7510A		H,W,A		06
	R160	**VV058300**	AC Cord	BS H05VV-F3X0.75		B		08
	R170	**VV103100**	Cord Strain Relief	SR-6P1				01
	R180	**EG340190**	Bind Head Tapping Screw-B	4.0X8 MFZN2BL			6	01
	R190	**VU859000**	Power Switch Knob	MX12/4		POWER ON/OFF		01
	R200	**VP156800**	Bind Head Screw	A4.0X8 MFZN2BL		U,V,H,W,B,A		01
	R210	**VN413300**	Bonding Tapping Screw-B	3.0X8 MFZN2BL				01
	R220	**V4773400**	Holder, Cord				2	
	R230	**EG340190**	Bind Head Tapping Screw-B	4.0X8 MFZN2BL			2	01

*: New Parts

RANK: Japan only

■ ELECTRICAL PARTS

	REF NO.	PART NO.	DESCRIPTION			REMARKS	QTY	RANK
			ELECTRICAL PARTS			EMX660		
*		**V5110900**	Circuit Board	MIX		(XY280A00)		
*		**V5111000**	Circuit Board	SUB		(XY281A00)		
*		**V5227100**	Circuit Board	PWR		J (XY324A00)		
*		**V5227200**	Circuit Board	PWR		U,V (XY324A00)		
*		**V5227300**	Circuit Board	PWR		H,W,B,A (XY324A00)		
*		**V5110900**	Circuit Board	MIX		(XY280A00)		
		VV307300	LED Spacer	MX12/4			22	01
		VZ968500	Button	NO.947 CD-GRAY		PAD	4	01
		VV291400	Jumper Wire	0.6			200	01
	C101	**UR877470**	Electrolytic Cap.	47.00 63.0V				
	C102	**VV488800**	Electrolytic Cap.-LLM	10.00 50.0V				01
	C103	**VV488800**	Electrolytic Cap.-LLM	10.00 50.0V				01
	C104	**VZ353800**	Ceramic Cap.-B	470P 50V K				01
	-106	**VZ353800**	Ceramic Cap.-B	470P 50V K				01
	C107	**VZ353800**	Ceramic Cap.-B	470P 50V K				01
	C108	**UR828470**	Electrolytic Cap.	470.00 10.0V				01
	C109	**VZ353500**	Ceramic Capacitor-SL	100P 50V J				01
	C111	**VZ353500**	Ceramic Capacitor-SL	100P 50V J				01
	-112	**UR877100**	Electrolytic Cap.	10.00 63.0V				01
	C113	**UA954270**	Mylar Capacitor	0.027 50V J				01
	C114	**UA953560**	Mylar Capacitor	5600P 50V J				01
*	C115	**UA953820**	Mylar Capacitor	8200P 50V J				
	C116	**UA953220**	Mylar Capacitor	2200P 50V J				01
	C117	**VZ353500**	Ceramic Capacitor-SL	100P 50V J				01
	C118	**VZ352900**	Ceramic Capacitor-SL	27P 50V J				01
	C119	**UR857470**	Electrolytic Cap.	47.00 35.0V				01
	C120	**UR877100**	Electrolytic Cap.	10.00 63.0V				01
	C121	**UR877100**	Electrolytic Cap.	10.00 63.0V				01
	C122	**VZ354000**	Ceramic Capacitor-F	0.01 50V Z				01
	-125	**VZ354000**	Ceramic Capacitor-F	0.01 50V Z				01
	C126	**VZ353900**	Ceramic Cap.-B	1000P 50V K				01
	C201	**UR877470**	Electrolytic Cap.	47.00 63.0V				
	C202	**VV488800**	Electrolytic Cap.-LLM	10.00 50.0V				01
	C203	**VV488800**	Electrolytic Cap.-LLM	10.00 50.0V				01
	C204	**VZ353800**	Ceramic Cap.-B	470P 50V K				01
	-207	**VZ353800**	Ceramic Cap.-B	470P 50V K				01
	C208	**UR828470**	Electrolytic Cap.	470.00 10.0V				01
	C209	**VZ353500**	Ceramic Capacitor-SL	100P 50V J				01
	-211	**VZ353500**	Ceramic Capacitor-SL	100P 50V J				01
	C212	**UR877100**	Electrolytic Cap.	10.00 63.0V				01
	C213	**UA954270**	Mylar Capacitor	0.027 50V J				01
	C214	**UA953560**	Mylar Capacitor	5600P 50V J				01
*	C215	**UA953820**	Mylar Capacitor	8200P 50V J				
	C216	**UA953220**	Mylar Capacitor	2200P 50V J				01
	C217	**VZ353500**	Ceramic Capacitor-SL	100P 50V J				01
	C218	**VZ352900**	Ceramic Capacitor-SL	27P 50V J				01
	C219	**UR857470**	Electrolytic Cap.	47.00 35.0V				01
	C220	**UR877100**	Electrolytic Cap.	10.00 63.0V				01
	C221	**UR877100**	Electrolytic Cap.	10.00 63.0V				01
	C301	**UR877470**	Electrolytic Cap.	47.00 63.0V				
	C302	**VV488800**	Electrolytic Cap.-LLM	10.00 50.0V				01
	C303	**VV488800**	Electrolytic Cap.-LLM	10.00 50.0V				01
	C304	**VZ353800**	Ceramic Cap.-B	470P 50V K				01
	C305	**VZ353800**	Ceramic Cap.-B	470P 50V K				01
	-307	**VZ353800**	Ceramic Cap.-B	470P 50V K				01
	C308	**UR828470**	Electrolytic Cap.	470.00 10.0V				01
	C309	**VZ353500**	Ceramic Capacitor-SL	100P 50V J				01
	-311	**VZ353500**	Ceramic Capacitor-SL	100P 50V J				01
	C312	**UR877100**	Electrolytic Cap.	10.00 63.0V				01
	C313	**UA954270**	Mylar Capacitor	0.027 50V J				01
	C314	**UA953560**	Mylar Capacitor	5600P 50V J				01
*	C315	**UA953820**	Mylar Capacitor	8200P 50V J				
	C316	**UA953220**	Mylar Capacitor	2200P 50V J				01
	C317	**VZ353500**	Ceramic Capacitor-SL	100P 50V J				01
	C318	**VZ352900**	Ceramic Capacitor-SL	27P 50V J				01
	C319	**UR857470**	Electrolytic Cap.	47.00 35.0V				01
	C320	**UR877100**	Electrolytic Cap.	10.00 63.0V				01
	C321	**UR877100**	Electrolytic Cap.	10.00 63.0V				01

*: New Parts

RANK: Japan only

	REF NO.	PART NO.	DESCRIPTION			REMARKS	QTY	RANK
	C322	**VZ354000**	Ceramic Capacitor-F	0.01 50V Z				01
	-325	**VZ354000**	Ceramic Capacitor-F	0.01 50V Z				01
	C326	**VZ353900**	Ceramic Cap.-B	1000P 50V K				01
	C401	**UR877470**	Electrolytic Cap.	47.00 63.0V				
	C402	**VV488800**	Electrolytic Cap.-LLM	10.00 50.0V				01
	C403	**VV488800**	Electrolytic Cap.-LLM	10.00 50.0V				01
	C404	**VZ353800**	Ceramic Cap.-B	470P 50V K				01
	-407	**VZ353800**	Ceramic Cap.-B	470P 50V K				01
	C408	**UR828470**	Electrolytic Cap.	470.00 10.0V				01
	C409	**VZ353500**	Ceramic Capacitor-SL	100P 50V J				01
	-411	**VZ353500**	Ceramic Capacitor-SL	100P 50V J				01
	C412	**UR877100**	Electrolytic Cap.	10.00 63.0V				01
	C413	**UA954270**	Mylar Capacitor	0.027 50V J				01
	C414	**UA953560**	Mylar Capacitor	5600P 50V J				01
*	C415	**UA953820**	Mylar Capacitor	8200P 50V J				
	C416	**UA953220**	Mylar Capacitor	2200P 50V J				01
	C417	**VZ353500**	Ceramic Capacitor-SL	100P 50V J				01
	C418	**VZ352900**	Ceramic Capacitor-SL	27P 50V J				01
	C419	**UR857470**	Electrolytic Cap.	47.00 35.0V				01
	C420	**UR877100**	Electrolytic Cap.	10.00 63.0V				01
	C421	**UR877100**	Electrolytic Cap.	10.00 63.0V				01
	C501	**UR877470**	Electrolytic Cap.	47.00 63.0V				
	C502	**VV488800**	Electrolytic Cap.-LLM	10.00 50.0V				01
	C503	**VV488800**	Electrolytic Cap.-LLM	10.00 50.0V				01
	C504	**VZ353800**	Ceramic Cap.-B	470P 50V K				01
	-507	**VZ353800**	Ceramic Cap.-B	470P 50V K				01
	C508	**UR828470**	Electrolytic Cap.	470.00 10.0V				01
	C509	**VZ353500**	Ceramic Capacitor-SL	100P 50V J				01
	-511	**VZ353500**	Ceramic Capacitor-SL	100P 50V J				01
	C512	**UR877100**	Electrolytic Cap.	10.00 63.0V				01
	C513	**UA954270**	Mylar Capacitor	0.027 50V J				01
	C514	**UA953560**	Mylar Capacitor	5600P 50V J				01
*	C515	**UA953820**	Mylar Capacitor	8200P 50V J				
	C516	**UA953220**	Mylar Capacitor	2200P 50V J				01
	C517	**VZ353500**	Ceramic Capacitor-SL	100P 50V J				01
	C518	**VZ352900**	Ceramic Capacitor-SL	27P 50V J				01
	C519	**UR857470**	Electrolytic Cap.	47.00 35.0V				01
	C520	**UR877100**	Electrolytic Cap.	10.00 63.0V				01
	C521	**UR877100**	Electrolytic Cap.	10.00 63.0V				01
	C522	**VZ353500**	Ceramic Capacitor-SL	100P 50V J				01
	C523	**VZ353200**	Ceramic Capacitor-SL	47P 50V J				01
	C524	**UR877100**	Electrolytic Cap.	10.00 63.0V				01
	C526	**VZ353900**	Ceramic Cap.-B	1000P 50V K				01
	C527	**VZ354000**	Ceramic Capacitor-F	0.01 50V Z				01
	-530	**VZ354000**	Ceramic Capacitor-F	0.01 50V Z				01
	C601	**UR877470**	Electrolytic Cap.	47.00 63.0V				
	C602	**VV488800**	Electrolytic Cap.-LLM	10.00 50.0V				01
	C603	**VV488800**	Electrolytic Cap.-LLM	10.00 50.0V				01
	C604	**VZ353800**	Ceramic Cap.-B	470P 50V K				01
	-607	**VZ353800**	Ceramic Cap.-B	470P 50V K				01
	C608	**UR828470**	Electrolytic Cap.	470.00 10.0V				01
	C609	**VZ353500**	Ceramic Capacitor-SL	100P 50V J				01
	-611	**VZ353500**	Ceramic Capacitor-SL	100P 50V J				01
	C612	**UR877100**	Electrolytic Cap.	10.00 63.0V				01
	C613	**UA954270**	Mylar Capacitor	0.027 50V J				01
	C614	**UA953560**	Mylar Capacitor	5600P 50V J				01
*	C615	**UA953820**	Mylar Capacitor	8200P 50V J				
	C616	**UA953220**	Mylar Capacitor	2200P 50V J				01
	C617	**VZ353500**	Ceramic Capacitor-SL	100P 50V J				01
	C618	**VZ352900**	Ceramic Capacitor-SL	27P 50V J				01
	C619	**UR857470**	Electrolytic Cap.	47.00 35.0V				01
	C622	**VZ353500**	Ceramic Capacitor-SL	100P 50V J				01
	C623	**VZ353200**	Ceramic Capacitor-SL	47P 50V J				01
	C624	**UR877100**	Electrolytic Cap.	10.00 63.0V				01
	C626	**VZ353900**	Ceramic Cap.-B	1000P 50V K				01
	C627	**VZ354000**	Ceramic Capacitor-F	0.01 50V Z				01
	-630	**VZ354000**	Ceramic Capacitor-F	0.01 50V Z				01
	C631	**UR877100**	Electrolytic Cap.	10.00 63.0V				01
	C632	**UR877100**	Electrolytic Cap.	10.00 63.0V				01
	C633	**VZ353200**	Ceramic Capacitor-SL	47P 50V J				01

*: New Parts

RANK: Japan only

REF NO.	PART NO.	DESCRIPTION			REMARKS	QTY	RANK
C634	**VZ353200**	Ceramic Capacitor-SL	47P 50V J				01
C635	**VZ353500**	Ceramic Capacitor-SL	100P 50V J				01
C636	**VZ353500**	Ceramic Capacitor-SL	100P 50V J				01
C637	**VZ352800**	Ceramic Capacitor-SL	22P 50V J				01
C638	**VZ352800**	Ceramic Capacitor-SL	22P 50V J				01
C639	**UR877100**	Electrolytic Cap.	10.00 63.0V				01
C640	**UR877100**	Electrolytic Cap.	10.00 63.0V				01
C702	**UR838100**	Electrolytic Cap.	100.00 16.0V				01
C703	**VZ353600**	Ceramic Cap.-B	220P 50V K				01
C704	**VZ352600**	Ceramic Capacitor-SL	6P 50V J				01
C705	**UR877100**	Electrolytic Cap.	10.00 63.0V				01
C706	**VZ353900**	Ceramic Cap.-B	1000P 50V K				01
C708	**VZ353600**	Ceramic Cap.-B	220P 50V K				01
C709	**VZ352700**	Ceramic Capacitor-SL	10P 50V J				01
C710	**UR857470**	Electrolytic Cap.	47.00 35.0V				01
C711	**UR877100**	Electrolytic Cap.	10.00 63.0V				01
C712	**VZ353600**	Ceramic Cap.-B	220P 50V K				01
C713	**VZ353400**	Ceramic Capacitor-SL	68P 50V J				01
C714	**VZ353900**	Ceramic Cap.-B	1000P 50V K				01
C716	**UA655820**	Mylar Capacitor	0.82 50V J				01
C717	**UA954820**	Mylar Capacitor	0.082 50V J				01
C718	**UA655470**	Mylar Capacitor	0.47 50V J				01
C719	**UA954390**	Mylar Capacitor	0.039 50V J				01
C720	**UA655220**	Mylar Capacitor	0.22 50V J				01
C721	**UA954180**	Mylar Capacitor	0.018 50V J				01
C722	**UA655100**	Mylar Capacitor	0.1 50V J				01
C723	**UA954100**	Mylar Capacitor	0.01 50V J				01
C724	**UA954470**	Mylar Capacitor	0.047 50V J				01
C725	**UA953470**	Mylar Capacitor	4700P 50V J				01
C726	**UA954270**	Mylar Capacitor	0.027 50V J				01
C727	**UA953220**	Mylar Capacitor	2200P 50V J				01
C728	**UA954120**	Mylar Capacitor	0.012 50V J				
C729	**UA953120**	Mylar Capacitor	1200P 50V J				01
C730	**VZ354000**	Ceramic Capacitor-F	0.01 50V Z				01
C731	**VZ354000**	Ceramic Capacitor-F	0.01 50V Z				01
C732	**VZ353800**	Ceramic Cap.-B	470P 50V K				01
C733	**UR857470**	Electrolytic Cap.	47.00 35.0V				01
C734	**UR877100**	Electrolytic Cap.	10.00 63.0V				01
C736	**VZ353600**	Ceramic Cap.-B	220P 50V K				01
C737	**VZ353400**	Ceramic Capacitor-SL	68P 50V J				01
C738	**UR857470**	Electrolytic Cap.	47.00 35.0V				01
C741	**VZ354000**	Ceramic Capacitor-F	0.01 50V Z				01
-748	**VZ354000**	Ceramic Capacitor-F	0.01 50V Z				01
C751	**UR877100**	Electrolytic Cap.	10.00 63.0V				01
C752	**VZ353500**	Ceramic Capacitor-SL	100P 50V J				01
C753	**VZ353500**	Ceramic Capacitor-SL	100P 50V J				01
C754	**UR877100**	Electrolytic Cap.	10.00 63.0V				01
C802	**UR838100**	Electrolytic Cap.	100.00 16.0V				01
C803	**VZ353600**	Ceramic Cap.-B	220P 50V K				01
C804	**VZ352600**	Ceramic Capacitor-SL	6P 50V J				01
C805	**UR877100**	Electrolytic Cap.	10.00 63.0V				01
C806	**VZ353900**	Ceramic Cap.-B	1000P 50V K				01
C808	**VZ353600**	Ceramic Cap.-B	220P 50V K				01
C809	**VZ352700**	Ceramic Capacitor-SL	10P 50V J				01
C810	**UR877100**	Electrolytic Cap.	10.00 63.0V				01
C811	**UR877100**	Electrolytic Cap.	10.00 63.0V				01
C812	**VZ353600**	Ceramic Cap.-B	220P 50V K				01
C813	**VZ353400**	Ceramic Capacitor-SL	68P 50V J				01
C814	**VZ353900**	Ceramic Cap.-B	1000P 50V K				01
C816	**UA655820**	Mylar Capacitor	0.82 50V J				01
C817	**UA954820**	Mylar Capacitor	0.082 50V J				01
C818	**UA655470**	Mylar Capacitor	0.47 50V J				01
C819	**UA954390**	Mylar Capacitor	0.039 50V J				01
C820	**UA655220**	Mylar Capacitor	0.22 50V J				01
C821	**UA954180**	Mylar Capacitor	0.018 50V J				01
C822	**UA655100**	Mylar Capacitor	0.1 50V J				01
C823	**UA954100**	Mylar Capacitor	0.01 50V J				01
C824	**UA954470**	Mylar Capacitor	0.047 50V J				01
C825	**UA953470**	Mylar Capacitor	4700P 50V J				01
C826	**UA954270**	Mylar Capacitor	0.027 50V J				01

✻: New Parts

RANK: Japan only

REF NO.	PART NO.	DESCRIPTION			REMARKS	QTY	RANK
C827	**UA953220**	Mylar Capacitor	2200P 50V J				01
C828	**UA954120**	Mylar Capacitor	0.012 50V J				
C829	**UA953120**	Mylar Capacitor	1200P 50V J				01
C830	**VZ354000**	Ceramic Capacitor-F	0.01 50V Z				01
C831	**VZ354000**	Ceramic Capacitor-F	0.01 50V Z				01
C832	**VZ353800**	Ceramic Cap.-B	470P 50V K				01
C833	**UR857470**	Electrolytic Cap.	47.00 35.0V				01
C834	**UR877100**	Electrolytic Cap.	10.00 63.0V				01
C901	**VZ353600**	Ceramic Cap.-B	220P 50V K				01
C902	**VZ352600**	Ceramic Capacitor-SL	6P 50V J				01
C903	**UR877100**	Electrolytic Cap.	10.00 63.0V				01
C904	**UR877100**	Electrolytic Cap.	10.00 63.0V				01
C905	**VZ353600**	Ceramic Cap.-B	220P 50V K				01
C906	**VZ353400**	Ceramic Capacitor-SL	68P 50V J				01
C907	**UR857470**	Electrolytic Cap.	47.00 35.0V				01
C908	**VZ354000**	Ceramic Capacitor-F	0.01 50V Z				01
C909	**VZ354000**	Ceramic Capacitor-F	0.01 50V Z				01
C910	**UR858100**	Electrolytic Cap.	100.00 35.0V				01
C911	**VZ354600**	Monolithic Ceramic Cap.	0.1 50V Z				01
C912	**VZ354600**	Monolithic Ceramic Cap.	0.1 50V Z				01
CN901	**VQ048400**	Connector, FFC	52045series 35P TE				01
D601	**VD631600**	Diode	1SS133,176,HSS104				01
-604	**VD631600**	Diode	1SS133,176,HSS104				01
D901	**VD631600**	Diode	1SS133,176,HSS104				01
D902	**VD631600**	Diode	1SS133,176,HSS104				01
EM901	**VV056900**	Filter, EMI	ZJSR5101-223TA				01
IC101	**XM356A00**	IC	NJM2068L-D		OP AMP		02
IC102	**XQ212A00**	IC	NJM4558L-D		OP AMP		03
IC301	**XM356A00**	IC	NJM2068L-D		OP AMP		02
IC302	**XQ212A00**	IC	NJM4558L-D		OP AMP		03
IC501	**XM356A00**	IC	NJM2068L-D		OP AMP		02
IC502	**XQ212A00**	IC	NJM4558L-D		OP AMP		03
IC601	**XM356A00**	IC	NJM2068L-D		OP AMP		02
IC603	**XM085A00**	IC	M5238AP		OP AMP		03
IC701	**XG203A00**	IC	M5229P		7Seg Grafic		04
IC702	**XA534A00**	IC	BA6137		LED Driver		03
IC703	**XM356A00**	IC	NJM2068L-D		OP AMP		02
IC704	**XM356A00**	IC	NJM2068L-D		OP AMP		02
IC705	**XM356A00**	IC	NJM2068L-D		OP AMP		02
IC706	**XM356A00**	IC	NJM2068L-D		OP AMP		02
IC801	**XG203A00**	IC	M5229P		7Seg Grafic		04
IC802	**XA534A00**	IC	BA6137		LED Driver		03
IC901	**XM356A00**	IC	NJM2068L-D		OP AMP		02
IC902	**IR013800**	IC	TC74HC138AP		DECO-8		02
J1	**VV291400**	Jumper Wire	0.6			22	01
JK101	**VU805200**	XLM Connector	XLR-Jack NC3FAV1-0		CH1(Lo-Z)		04
JK102	**V2954500**	Phone Jack	LJ-0695-4R-A		CH1(Hi-Z)		02
JK201	**VU805200**	XLM Connector	XLR-Jack NC3FAV1-0		CH2(Lo-Z)		04
JK202	**V2954500**	Phone Jack	LJ-0695-4R-A		CH2(Hi-Z)		02
JK301	**VU805200**	XLM Connector	XLR-Jack NC3FAV1-0		CH3(Lo-Z)		04
JK302	**V2954500**	Phone Jack	LJ-0695-4R-A		CH3(Hi-Z)		02
JK401	**VU805200**	XLM Connector	XLR-Jack NC3FAV1-0		CH4(Lo-Z)		04
JK402	**V2954500**	Phone Jack	LJ-0695-4R-A		CH4(Hi-Z)		02
JK501	**VU805200**	XLM Connector	XLR-Jack NC3FAV1-0		CH5(MIC)		04
JK502	**V2954500**	Phone Jack	LJ-0695-4R-A		CH5(LIN①)		02
JK503	**V2954500**	Phone Jack	LJ-0695-4R-A		CH5(LINE②)		02
JK601	**VU805200**	XLM Connector	XLR-Jack NC3FAV1-0		CH6(MIC)		04
JK602	**V2954500**	Phone Jack	LJ-0695-4R-A		CH6(LIN①)		02
JK603	**V2954500**	Phone Jack	LJ-0695-4R-A		CH6(LIN②)		02
JK701	**V2954500**	Phone Jack	LJ-0695-4R-A		OUTPUT(MAIN)		02
* JK702	**V4807600**	Pin Connector	RJ-1130A-01-0320A		TAPE IN,REC OUT(①,②)		
JK703	**V2954500**	Phone Jack	LJ-0695-4R-A		INPUT(AUX IN)		02
JK801	**V2954500**	Phone Jack	LJ-0695-4R-A		OUTPUT(MONITOR)		02
JK901	**V2954500**	Phone Jack	LJ-0695-4R-A		EFFECT OUT		02
JK902	**V2954500**	Phone Jack	LJ-0695-4R-A		FOOT SW		02
LD701	**VV938100**	LED	LT331-41-C13 (YE)		MAIN(+6,+3,0)		01
-703	**VV938100**	LED	LT331-41-C13 (YE)				01
LD704	**VV621000**	LED	LT321-41-C13 (GR)		MAIN(-5)		01
LD705	**VV621000**	LED	LT321-41-C13 (GR)		MAIN(-10)		01
LD801	**VV938100**	LED	LT331-41-C13 (YE)		MONITOR(+6,+3,0)		01

*: New Parts

RANK: Japan only

REF NO.	PART NO.	DESCRIPTION			REMARKS	QTY	RANK
-803	**VV938100**	LED	LT331-41-C13 (YE)				01
LD804	**VV621000**	LED	LT321-41-C13 (GR)		MONITOR(-5)		01
LD805	**VV621000**	LED	LT321-41-C13 (GR)		MONITOR(-10)		01
LD901	**VV621000**	LED	LT321-41-C13 (GR)		D.EFFECT(VO.ECHO1,2,		01
-908	**VV621000**	LED	LT321-41-C13 (GR)		VO.REV1,2, HALL1,2,		01
					HALL,PLATE)		
LD909	**VV938100**	LED	LT331-41-C13 (YE)		D.EFFECT ON		01
LD910	**VV621000**	LED	LT321-41-C13 (GR)		POWER		01
LD911	**VV620800**	LED	LT311G-41-C13(RE)		LIMITER 1		01
LD912	**VV620800**	LED	LT311G-41-C13(RE)		LIMITER 2		01
Q101	**IC224030**	Transistor	2SC2240 GR,BL				01
Q102	**IC224030**	Transistor	2SC2240 GR,BL				01
Q201	**IC224030**	Transistor	2SC2240 GR,BL				01
Q202	**IC224030**	Transistor	2SC2240 GR,BL				01
Q301	**IC224030**	Transistor	2SC2240 GR,BL				01
Q302	**IC224030**	Transistor	2SC2240 GR,BL				01
Q401	**IC224030**	Transistor	2SC2240 GR,BL				01
Q402	**IC224030**	Transistor	2SC2240 GR,BL				01
Q501	**IC224030**	Transistor	2SC2240 GR,BL				01
Q502	**IC224030**	Transistor	2SC2240 GR,BL				01
Q601	**IC224030**	Transistor	2SC2240 GR,BL				01
Q602	**IC224030**	Transistor	2SC2240 GR,BL				01
Q901	**IA101590**	Transistor	2SA1015 O,Y				01
R101	**HF458100**	Carbon Resistor	100.0K 1/4 J				01
R102	**V2440200**	Metal Film Resistor	2.4K 1/4 F				01
R103	**V2440200**	Metal Film Resistor	2.4K 1/4 F				01
R104	**VV058400**	Flame Proof C. Resistor	390.0 1/4 J				01
R105	**HF457150**	Carbon Resistor	15.0K 1/4 J				01
R106	**HF454100**	Carbon Resistor	10.0 1/4 J				01
R107	**HF454100**	Carbon Resistor	10.0 1/4 J				01
R108	**VV066100**	Metal Film Resistor	47K 1/4 F				01
R109	**VV066100**	Metal Film Resistor	47K 1/4 F				01
R110	**HF454100**	Carbon Resistor	10.0 1/4 J				01
R111	**HF454100**	Carbon Resistor	10.0 1/4 J				01
R112	**HF455150**	Carbon Resistor	150.0 1/4 J				01
R113	**HF456820**	Carbon Resistor	8.2K 1/4 J				01
R114	**VV065400**	Metal Film Resistor	8.2K 1/4 F				01
R115	**VV065400**	Metal Film Resistor	8.2K 1/4 F				01
R116	**VV065100**	Metal Film Resistor	2.2K 1/4 F				01
R117	**VV065100**	Metal Film Resistor	2.2K 1/4 F				01
R118	**VV065500**	Metal Film Resistor	10K 1/4 F				01
R119	**VV065500**	Metal Film Resistor	10K 1/4 F				01
R120	**HF457100**	Carbon Resistor	10.0K 1/4 J				01
R121	**HF457100**	Carbon Resistor	10.0K 1/4 J				01
R122	**HF456120**	Carbon Resistor	1.2K 1/4 J				01
R123	**HF456120**	Carbon Resistor	1.2K 1/4 J				01
R124	**HF456330**	Carbon Resistor	3.3K 1/4 J				01
R125	**HF456330**	Carbon Resistor	3.3K 1/4 J				01
R126	**HF457100**	Carbon Resistor	10.0K 1/4 J				01
R127	**HF456390**	Carbon Resistor	3.9K 1/4 J				01
R128	**HF454100**	Carbon Resistor	10.0 1/4 J				01
R129	**HF457180**	Carbon Resistor	18.0K 1/4 J				01
-131	**HF457180**	Carbon Resistor	18.0K 1/4 J				01
R132	**VV312400**	Metal Film Resistor	3.9K 1/4 F				01
R133	**VV312400**	Metal Film Resistor	3.9K 1/4 F				01
R134	**HF458100**	Carbon Resistor	100.0K 1/4 J				01
R135	**HF458100**	Carbon Resistor	100.0K 1/4 J				01
R201	**HF458100**	Carbon Resistor	100.0K 1/4 J				01
R202	**V2440200**	Metal Film Resistor	2.4K 1/4 F				01
R203	**V2440200**	Metal Film Resistor	2.4K 1/4 F				01
R204	**VV058400**	Flame Proof C. Resistor	390.0 1/4 J				01
R205	**HF457150**	Carbon Resistor	15.0K 1/4 J				01
R206	**HF454100**	Carbon Resistor	10.0 1/4 J				01
R207	**HF454100**	Carbon Resistor	10.0 1/4 J				01
R208	**VV066100**	Metal Film Resistor	47K 1/4 F				01
R209	**VV066100**	Metal Film Resistor	47K 1/4 F				01
R210	**HF454100**	Carbon Resistor	10.0 1/4 J				01
R211	**HF454100**	Carbon Resistor	10.0 1/4 J				01
R212	**HF455150**	Carbon Resistor	150.0 1/4 J				01
R213	**HF456820**	Carbon Resistor	8.2K 1/4 J				01

✻: New Parts

RANK: Japan only

REF NO.	PART NO.	DESCRIPTION			REMARKS	QTY	RANK
R214	**VV065400**	Metal Film Resistor	8.2K 1/4 F				01
R215	**VV065400**	Metal Film Resistor	8.2K 1/4 F				01
R216	**VV065100**	Metal Film Resistor	2.2K 1/4 F				01
R217	**VV065100**	Metal Film Resistor	2.2K 1/4 F				01
R218	**VV065500**	Metal Film Resistor	10K 1/4 F				01
R219	**VV065500**	Metal Film Resistor	10K 1/4 F				01
R220	**HF457100**	Carbon Resistor	10.0K 1/4 J				01
R221	**HF457100**	Carbon Resistor	10.0K 1/4 J				01
R222	**HF456120**	Carbon Resistor	1.2K 1/4 J				01
R223	**HF456120**	Carbon Resistor	1.2K 1/4 J				01
R224	**HF456330**	Carbon Resistor	3.3K 1/4 J				01
R225	**HF456330**	Carbon Resistor	3.3K 1/4 J				01
R226	**HF457100**	Carbon Resistor	10.0K 1/4 J				01
R227	**HF456390**	Carbon Resistor	3.9K 1/4 J				01
R228	**HF454100**	Carbon Resistor	10.0 1/4 J				01
R229	**HF457180**	Carbon Resistor	18.0K 1/4 J				01
-231	**HF457180**	Carbon Resistor	18.0K 1/4 J				01
R232	**VV312400**	Metal Film Resistor	3.9K 1/4 F				01
R233	**VV312400**	Metal Film Resistor	3.9K 1/4 F				01
R234	**HF458100**	Carbon Resistor	100.0K 1/4 J				01
R235	**HF458100**	Carbon Resistor	100.0K 1/4 J				01
R301	**HF458100**	Carbon Resistor	100.0K 1/4 J				01
R302	**V2440200**	Metal Film Resistor	2.4K 1/4 F				01
R303	**V2440200**	Metal Film Resistor	2.4K 1/4 F				01
R304	**VV058400**	Flame Proof C. Resistor	390.0 1/4 J				01
R305	**HF457150**	Carbon Resistor	15.0K 1/4 J				01
R306	**HF454100**	Carbon Resistor	10.0 1/4 J				01
R307	**HF454100**	Carbon Resistor	10.0 1/4 J				01
R308	**VV066100**	Metal Film Resistor	47K 1/4 F				01
R309	**VV066100**	Metal Film Resistor	47K 1/4 F				01
R310	**HF454100**	Carbon Resistor	10.0 1/4 J				01
R311	**HF454100**	Carbon Resistor	10.0 1/4 J				01
R312	**HF455150**	Carbon Resistor	150.0 1/4 J				01
R313	**HF456820**	Carbon Resistor	8.2K 1/4 J				01
R314	**VV065400**	Metal Film Resistor	8.2K 1/4 F				01
R315	**VV065400**	Metal Film Resistor	8.2K 1/4 F				01
R316	**VV065100**	Metal Film Resistor	2.2K 1/4 F				01
R317	**VV065100**	Metal Film Resistor	2.2K 1/4 F				01
R318	**VV065500**	Metal Film Resistor	10K 1/4 F				01
R319	**VV065500**	Metal Film Resistor	10K 1/4 F				01
R320	**HF457100**	Carbon Resistor	10.0K 1/4 J				01
R321	**HF457100**	Carbon Resistor	10.0K 1/4 J				01
R322	**HF456120**	Carbon Resistor	1.2K 1/4 J				01
R323	**HF456120**	Carbon Resistor	1.2K 1/4 J				01
R324	**HF456330**	Carbon Resistor	3.3K 1/4 J				01
R325	**HF456330**	Carbon Resistor	3.3K 1/4 J				01
R326	**HF457100**	Carbon Resistor	10.0K 1/4 J				01
R327	**HF456390**	Carbon Resistor	3.9K 1/4 J				01
R328	**HF454100**	Carbon Resistor	10.0 1/4 J				01
R329	**HF457180**	Carbon Resistor	18.0K 1/4 J				01
-331	**HF457180**	Carbon Resistor	18.0K 1/4 J				01
R332	**VV312400**	Metal Film Resistor	3.9K 1/4 F				01
R333	**VV312400**	Metal Film Resistor	3.9K 1/4 F				01
R334	**HF458100**	Carbon Resistor	100.0K 1/4 J				01
R335	**HF458100**	Carbon Resistor	100.0K 1/4 J				01
R401	**HF458100**	Carbon Resistor	100.0K 1/4 J				01
R402	**VV065300**	Metal Film Resistor	6.8K 1/4 F				01
R403	**VV065300**	Metal Film Resistor	6.8K 1/4 F				01
R404	**VV058400**	Flame Proof C. Resistor	390.0 1/4 J				01
R405	**HF457150**	Carbon Resistor	15.0K 1/4 J				01
R406	**HF454100**	Carbon Resistor	10.0 1/4 J				01
R407	**HF454100**	Carbon Resistor	10.0 1/4 J				01
R408	**VV066100**	Metal Film Resistor	47K 1/4 F				01
R409	**VV066100**	Metal Film Resistor	47K 1/4 F				01
R410	**HF454100**	Carbon Resistor	10.0 1/4 J				01
R411	**HF454100**	Carbon Resistor	10.0 1/4 J				01
R412	**HF455150**	Carbon Resistor	150.0 1/4 J				01
R413	**HF456820**	Carbon Resistor	8.2K 1/4 J				01
R414	**VV065400**	Metal Film Resistor	8.2K 1/4 F				01
R415	**VV065400**	Metal Film Resistor	8.2K 1/4 F				01

※: New Parts

RANK: Japan only

REF NO.	PART NO.	DESCRIPTION			REMARKS	QTY	RANK
R416	**VV065100**	Metal Film Resistor	2.2K 1/4 F				01
R417	**VV065100**	Metal Film Resistor	2.2K 1/4 F				01
R418	**VV065500**	Metal Film Resistor	10K 1/4 F				01
R419	**VV065500**	Metal Film Resistor	10K 1/4 F				01
R420	**HF457100**	Carbon Resistor	10.0K 1/4 J				01
R421	**HF457100**	Carbon Resistor	10.0K 1/4 J				01
R422	**HF456120**	Carbon Resistor	1.2K 1/4 J				01
R423	**HF456120**	Carbon Resistor	1.2K 1/4 J				01
R424	**HF456330**	Carbon Resistor	3.3K 1/4 J				01
R425	**HF456330**	Carbon Resistor	3.3K 1/4 J				01
R426	**HF457100**	Carbon Resistor	10.0K 1/4 J				01
R427	**HF456390**	Carbon Resistor	3.9K 1/4 J				01
R428	**HF454100**	Carbon Resistor	10.0 1/4 J				01
R429	**HF457180**	Carbon Resistor	18.0K 1/4 J				01
-431	**HF457180**	Carbon Resistor	18.0K 1/4 J				01
R432	**VV312400**	Metal Film Resistor	3.9K 1/4 F				01
R433	**VV312400**	Metal Film Resistor	3.9K 1/4 F				01
R434	**HF458100**	Carbon Resistor	100.0K 1/4 J				01
R435	**HF458100**	Carbon Resistor	100.0K 1/4 J				01
R501	**HF458100**	Carbon Resistor	100.0K 1/4 J				01
R502	**V2440200**	Metal Film Resistor	2.4K 1/4 F				01
R503	**V2440200**	Metal Film Resistor	2.4K 1/4 F				01
R504	**VV058400**	Flame Proof C. Resistor	390.0 1/4 J				01
R505	**HF457150**	Carbon Resistor	15.0K 1/4 J				01
R506	**HF454100**	Carbon Resistor	10.0 1/4 J				01
R507	**HF454100**	Carbon Resistor	10.0 1/4 J				01
R508	**VV066100**	Metal Film Resistor	47K 1/4 F				01
R509	**VV066100**	Metal Film Resistor	47K 1/4 F				01
R510	**HF454100**	Carbon Resistor	10.0 1/4 J				01
R511	**HF454100**	Carbon Resistor	10.0 1/4 J				01
R512	**HF455150**	Carbon Resistor	150.0 1/4 J				01
R513	**HF457180**	Carbon Resistor	18.0K 1/4 J				01
R514	**VV065400**	Metal Film Resistor	8.2K 1/4 F				01
R515	**VV065400**	Metal Film Resistor	8.2K 1/4 F				01
R516	**VV065100**	Metal Film Resistor	2.2K 1/4 F				01
R517	**VV065100**	Metal Film Resistor	2.2K 1/4 F				01
R518	**VV065500**	Metal Film Resistor	10K 1/4 F				01
R519	**VV065500**	Metal Film Resistor	10K 1/4 F				01
R520	**HF457100**	Carbon Resistor	10.0K 1/4 J				01
R521	**HF457100**	Carbon Resistor	10.0K 1/4 J				01
R522	**HF456120**	Carbon Resistor	1.2K 1/4 J				01
R523	**HF456120**	Carbon Resistor	1.2K 1/4 J				01
R524	**HF456330**	Carbon Resistor	3.3K 1/4 J				01
R525	**HF456330**	Carbon Resistor	3.3K 1/4 J				01
R526	**HF457100**	Carbon Resistor	10.0K 1/4 J				01
R527	**HF456390**	Carbon Resistor	3.9K 1/4 J				01
R528	**HF454100**	Carbon Resistor	10.0 1/4 J				01
R529	**HF457180**	Carbon Resistor	18.0K 1/4 J				01
-533	**HF457180**	Carbon Resistor	18.0K 1/4 J				01
R534	**HF458100**	Carbon Resistor	100.0K 1/4 J				01
-536	**HF458100**	Carbon Resistor	100.0K 1/4 J				01
R537	**HF456470**	Carbon Resistor	4.7K 1/4 J				01
R538	**HF457100**	Carbon Resistor	10.0K 1/4 J				01
R601	**HF458100**	Carbon Resistor	100.0K 1/4 J				01
R602	**V2440200**	Metal Film Resistor	2.4K 1/4 F				01
R603	**V2440200**	Metal Film Resistor	2.4K 1/4 F				01
R604	**VV058400**	Flame Proof C. Resistor	390.0 1/4 J				01
R605	**HF457150**	Carbon Resistor	15.0K 1/4 J				01
R606	**HF454100**	Carbon Resistor	10.0 1/4 J				01
R607	**HF454100**	Carbon Resistor	10.0 1/4 J				01
R608	**VV066100**	Metal Film Resistor	47K 1/4 F				01
R609	**VV066100**	Metal Film Resistor	47K 1/4 F				01
R610	**HF454100**	Carbon Resistor	10.0 1/4 J				01
R611	**HF454100**	Carbon Resistor	10.0 1/4 J				01
R612	**HF455150**	Carbon Resistor	150.0 1/4 J				01
R613	**HF457180**	Carbon Resistor	18.0K 1/4 J				01
R614	**VV065400**	Metal Film Resistor	8.2K 1/4 F				01
R615	**VV065400**	Metal Film Resistor	8.2K 1/4 F				01
R616	**VV065100**	Metal Film Resistor	2.2K 1/4 F				01
R617	**VV065100**	Metal Film Resistor	2.2K 1/4 F				01

✻: New Parts

RANK: Japan only

REF NO.	PART NO.	DESCRIPTION			REMARKS	QTY	RANK
R618	**VV065500**	Metal Film Resistor	10K 1/4 F				01
R619	**VV065500**	Metal Film Resistor	10K 1/4 F				01
R620	**HF457100**	Carbon Resistor	10.0K 1/4 J				01
R621	**HF457100**	Carbon Resistor	10.0K 1/4 J				01
R622	**HF456120**	Carbon Resistor	1.2K 1/4 J				01
R623	**HF456120**	Carbon Resistor	1.2K 1/4 J				01
R624	**HF456330**	Carbon Resistor	3.3K 1/4 J				01
R625	**HF456330**	Carbon Resistor	3.3K 1/4 J				01
R626	**HF457100**	Carbon Resistor	10.0K 1/4 J				01
R627	**HF456390**	Carbon Resistor	3.9K 1/4 J				01
R628	**HF454100**	Carbon Resistor	10.0 1/4 J				01
R629	**HF457180**	Carbon Resistor	18.0K 1/4 J				01
-633	**HF457180**	Carbon Resistor	18.0K 1/4 J				01
R636	**HF458100**	Carbon Resistor	100.0K 1/4 J				01
R637	**HF456470**	Carbon Resistor	4.7K 1/4 J				01
R638	**HF457100**	Carbon Resistor	10.0K 1/4 J				01
R639	**HF456100**	Carbon Resistor	1.0K 1/4 J				01
R640	**HF456100**	Carbon Resistor	1.0K 1/4 J				01
R641	**HF458470**	Carbon Resistor	470.0K 1/4 J				01
R642	**HF458470**	Carbon Resistor	470.0K 1/4 J				01
R643	**HF456470**	Carbon Resistor	4.7K 1/4 J				01
R644	**HF456470**	Carbon Resistor	4.7K 1/4 J				01
R645	**HF457470**	Carbon Resistor	47.0K 1/4 J				01
R646	**HF457470**	Carbon Resistor	47.0K 1/4 J				01
R701	**HF456820**	Carbon Resistor	8.2K 1/4 J				01
R702	**HF456820**	Carbon Resistor	8.2K 1/4 J				01
R703	**HF456150**	Carbon Resistor	1.5K 1/4 J				01
R704	**HF456150**	Carbon Resistor	1.5K 1/4 J				01
R705	**HF456120**	Carbon Resistor	1.2K 1/4 J				01
R706	**HF456120**	Carbon Resistor	1.2K 1/4 J				01
R710	**HF457180**	Carbon Resistor	18.0K 1/4 J				01
R711	**HF457360**	Carbon Resistor	36.0K 1/4 J				01
R712	**HF457360**	Carbon Resistor	36.0K 1/4 J				01
R713	**HF458220**	Carbon Resistor	220.0K 1/4 J				01
R714	**HF458100**	Carbon Resistor	100.0K 1/4 J				01
R716	**HF458120**	Carbon Resistor	120.0K 1/4 J				01
R717	**HF458120**	Carbon Resistor	120.0K 1/4 J				01
R718	**HF457180**	Carbon Resistor	18.0K 1/4 J				01
R719	**HF455220**	Carbon Resistor	220.0 1/4 J				01
R720	**HF456430**	Carbon Resistor	4.3K 1/4 J				01
R721	**HF457100**	Carbon Resistor	10.0K 1/4 J				01
R724	**HF456330**	Carbon Resistor	3.3K 1/4 J				01
R725	**HF458100**	Carbon Resistor	100.0K 1/4 J				01
R726	**HF456330**	Carbon Resistor	3.3K 1/4 J				01
R727	**HF457100**	Carbon Resistor	10.0K 1/4 J				01
R728	**HF456470**	Carbon Resistor	4.7K 1/4 J				01
R729	**HF455750**	Carbon Resistor	750.0 1/4 J				01
R730	**HF457100**	Carbon Resistor	10.0K 1/4 J				01
R731	**HF455680**	Carbon Resistor	680.0 1/4 J				01
-733	**HF455680**	Carbon Resistor	680.0 1/4 J				01
R734	**HF455560**	Carbon Resistor	560.0 1/4 J				01
R735	**HF455560**	Carbon Resistor	560.0 1/4 J				01
R737	**VV065500**	Metal Film Resistor	10K 1/4 F				01
R738	**VV065500**	Metal Film Resistor	10K 1/4 F				01
R739	**HF458100**	Carbon Resistor	100.0K 1/4 J				01
R741	**HF456910**	Carbon Resistor	9.1K 1/4 J				01
R742	**HF455100**	Carbon Resistor	100.0 1/4 J				01
R812	**HF457180**	Carbon Resistor	18.0K 1/4 J				01
R813	**HF458220**	Carbon Resistor	220.0K 1/4 J				01
R814	**HF458100**	Carbon Resistor	100.0K 1/4 J				01
R816	**HF458120**	Carbon Resistor	120.0K 1/4 J				01
R817	**HF458120**	Carbon Resistor	120.0K 1/4 J				01
R818	**HF457180**	Carbon Resistor	18.0K 1/4 J				01
R819	**HF455220**	Carbon Resistor	220.0 1/4 J				01
R820	**HF456430**	Carbon Resistor	4.3K 1/4 J				01
R821	**HF457100**	Carbon Resistor	10.0K 1/4 J				01
R824	**HF456330**	Carbon Resistor	3.3K 1/4 J				01
R825	**HF458100**	Carbon Resistor	100.0K 1/4 J				01
R826	**HF456330**	Carbon Resistor	3.3K 1/4 J				01
R827	**HF457100**	Carbon Resistor	10.0K 1/4 J				01

※: New Parts

RANK: Japan only

	REF NO.	PART NO.	DESCRIPTION			REMARKS	QTY	RANK
	R828	**HF456470**	Carbon Resistor	4.7K 1/4 J				01
	R829	**HF455750**	Carbon Resistor	750.0 1/4 J				01
	R830	**HF457100**	Carbon Resistor	10.0K 1/4 J				01
	R831	**HF455680**	Carbon Resistor	680.0 1/4 J				01
	-833	**HF455680**	Carbon Resistor	680.0 1/4 J				01
	R834	**HF455560**	Carbon Resistor	560.0 1/4 J				01
	R835	**HF455560**	Carbon Resistor	560.0 1/4 J				01
	R900	**HF454100**	Carbon Resistor	10.0 1/4 J				01
	R901	**HF458220**	Carbon Resistor	220.0K 1/4 J				01
	R902	**HF457220**	Carbon Resistor	22.0K 1/4 J				01
	R903	**HF457180**	Carbon Resistor	18.0K 1/4 J				01
	R904	**HF455220**	Carbon Resistor	220.0 1/4 J				01
	R905	**HF457150**	Carbon Resistor	15.0K 1/4 J				01
	R906	**HF457100**	Carbon Resistor	10.0K 1/4 J				01
	R907	**HF458100**	Carbon Resistor	100.0K 1/4 J				01
	R908	**HF455560**	Carbon Resistor	560.0 1/4 J				01
	R909	**HF455560**	Carbon Resistor	560.0 1/4 J				01
	R910	**HF458470**	Carbon Resistor	470.0K 1/4 J				01
	R911	**HF456470**	Carbon Resistor	4.7K 1/4 J				01
	R912	**HF457270**	Carbon Resistor	27.0K 1/4 J				01
	R913	**HF457270**	Carbon Resistor	27.0K 1/4 J				01
	R914	**HF457680**	Carbon Resistor	68.0K 1/4 J				01
	R915	**HF457680**	Carbon Resistor	68.0K 1/4 J				01
	R916	**HF456270**	Carbon Resistor	2.7K 1/4 J				01
	R917	**HF455330**	Carbon Resistor	330.0 1/4 J				01
	-925	**HF455330**	Carbon Resistor	330.0 1/4 J				01
	SW101	**VZ587700**	Push Switch	2C-2S ROCK		CH1(PAD)		01
	SW201	**VZ587700**	Push Switch	2C-2S ROCK		CH2(PAD)		01
	SW301	**VZ587700**	Push Switch	2C-2S ROCK		CH3(PAD)		01
	SW401	**VZ587700**	Push Switch	2C-2S ROCK		CH4(PAD)		01
	SW701	**VV044700**	Slide Switch	SSSU013NB1-YL		MAIN BRIDGE		02
	SW702	**VV051500**	Slide Switch	SSSU012NB1-YL		PHAMTOM		02
	SW901	**VV056000**	Tact Switch	SKQNAE025A		D.EFFECT(VO.ECHO1,2,		01
	-909	**VV056000**	Tact Switch	SKQNAE025A		VO.REV1,2, HALL1,2, HALL,PLATE)		01
*	VR101	**V5521600**	Rotary Variable Resistor	B 50.0K RD09F113		CH1(LOW, MID,HIGH)		
*	-103	**V5521600**	Rotary Variable Resistor	B 50.0K RD09F113				
*	VR104	**V5521500**	Rotary Variable Resistor	A 20.0K RK09D113		CHI(MONI,EFFECT,LEVEL)		
*	-106	**V5521500**	Rotary Variable Resistor	A 20.0K RK09D113				
*	VR201	**V5521600**	Rotary Variable Resistor	B 50.0K RD09F113		CH2(LOW, MID,HIGH)		
*	-203	**V5521600**	Rotary Variable Resistor	B 50.0K RD09F113				
*	VR204	**V5521500**	Rotary Variable Resistor	A 20.0K RK09D113		CH2(MONI,EFFECT,LEVEL)		
*	-206	**V5521500**	Rotary Variable Resistor	A 20.0K RK09D113				
*	VR301	**V5521600**	Rotary Variable Resistor	B 50.0K RD09F113		CH3(LOW, MID,HIGH)		
*	-303	**V5521600**	Rotary Variable Resistor	B 50.0K RD09F113				
*	VR304	**V5521500**	Rotary Variable Resistor	A 20.0K RK09D113		CH3(MONI,EFFECT,LEVEL)		
*	-306	**V5521500**	Rotary Variable Resistor	A 20.0K RK09D113				
*	VR401	**V5521600**	Rotary Variable Resistor	B 50.0K RD09F113		CH4(LOW, MID,HIGH)		
*	-403	**V5521600**	Rotary Variable Resistor	B 50.0K RD09F113				
*	VR404	**V5521500**	Rotary Variable Resistor	A 20.0K RK09D113		CH4(MONI,EFFECT,LEVEL)		
*	-406	**V5521500**	Rotary Variable Resistor	A 20.0K RK09D113				
*	VR501	**V5521600**	Rotary Variable Resistor	B 50.0K RD09F113		CH5(LOW, MID,HIGH)		
*	-503	**V5521600**	Rotary Variable Resistor	B 50.0K RD09F113				
*	VR504	**V5521500**	Rotary Variable Resistor	A 20.0K RK09D113		CH5(MONI,EFFECT,LEVEL)		
*	-506	**V5521500**	Rotary Variable Resistor	A 20.0K RK09D113				
*	VR601	**V5521600**	Rotary Variable Resistor	B 50.0K RD09F113		CH6(LOW, MID,HIGH)		
*	-603	**V5521600**	Rotary Variable Resistor	B 50.0K RD09F113				
*	VR604	**V5521500**	Rotary Variable Resistor	A 20.0K RK09D113		CH6(MONI,EFFECT,LEVEL)		
*	-606	**V5521500**	Rotary Variable Resistor	A 20.0K RK09D113				
*	VR701	**V5521500**	Rotary Variable Resistor	A 20.0K RK09D113		MAIN(AUX IN,TAPE IN,		
*	-703	**V5521500**	Rotary Variable Resistor	A 20.0K RK09D113		MASTER)		
	VR704	**VV044600**	Slide Variable Resistor	RS20H11KD017-YL		MAIN(125,250,500,1k,2k,		03
	-710	**VV044600**	Slide Variable Resistor	RS20H11KD017-YL		4k,8k)		03
*	VR802	**V5521500**	Rotary Variable Resistor	A 20.0K RK09D113		MONITOR(TAPE IN)		
*	VR803	**V5521500**	Rotary Variable Resistor	A 20.0K RK09D113		MONITOR(MASTER)		
	VR804	**VV044600**	Slide Variable Resistor	RS20H11KD017-YL		MONITOR(125,250,500,1k,		03
	-810	**VV044600**	Slide Variable Resistor	RS20H11KD017-YL		2k,4k,8k)		03
*	VR901	**V5521500**	Rotary Variable Resistor	A 20.0K RK09D113		MONITOR(EFFECT RTN)		
*	VR902	**V5521500**	Rotary Variable Resistor	A 20.0K RK09D113		MAIN(EFFECT RTN)		

*: New Parts

RANK: Japan only

	REF NO.	PART NO.	DESCRIPTION			REMARKS	QTY	RANK
*		**V5111000**	Circuit Board	SUB		(XY281A00)		
		VV291400	Jumper Wire	0.6				01
	C101	**VZ353500**	Ceramic Capacitor-SL	100P 50V J				01
	C102	**VZ353300**	Ceramic Capacitor-SL	56P 50V J				01
	C103	**UR838100**	Electrolytic Cap.	100.00 16.0V				01
	C104	**VZ353900**	Ceramic Cap.-B	1000P 50V K				01
	C105	**VZ353800**	Ceramic Cap.-B	470P 50V K				01
	C106	**UR857470**	Electrolytic Cap.	47.00 35.0V				01
	C107	**UR857470**	Electrolytic Cap.	47.00 35.0V				01
	C108	**UR877100**	Electrolytic Cap.	10.00 63.0V				01
	C109	**UR877100**	Electrolytic Cap.	10.00 63.0V				01
	C110	**UR897100**	Electrolytic Cap.	10.0 100.0V				01
	C111	**UR897100**	Electrolytic Cap.	10.0 100.0V				01
	C112	**FU451680**	Mica Capacitor	68P 500V J				01
	C113	**FU451820**	Mica Capacitor	82P 500V J				01
	C114	**VZ354000**	Ceramic Capacitor-F	0.01 50V Z				01
	C115	**VZ354000**	Ceramic Capacitor-F	0.01 50V Z				01
	C201	**VZ353500**	Ceramic Capacitor-SL	100P 50V J				01
	C202	**VZ353300**	Ceramic Capacitor-SL	56P 50V J				01
	C203	**UR838100**	Electrolytic Cap.	100.00 16.0V				01
	C204	**VZ353900**	Ceramic Cap.-B	1000P 50V K				01
	C205	**VZ353800**	Ceramic Cap.-B	470P 50V K				01
	C206	**UR857470**	Electrolytic Cap.	47.00 35.0V				01
	C207	**UR857470**	Electrolytic Cap.	47.00 35.0V				01
	C208	**UR877100**	Electrolytic Cap.	10.00 63.0V				01
	C209	**UR877100**	Electrolytic Cap.	10.00 63.0V				01
	C210	**UR897100**	Electrolytic Cap.	10.0 100.0V				01
	C211	**UR897100**	Electrolytic Cap.	10.0 100.0V				01
	C212	**FU451680**	Mica Capacitor	68P 500V J				01
	C213	**FU451820**	Mica Capacitor	82P 500V J				01
	C214	**VZ354000**	Ceramic Capacitor-F	0.01 50V Z				01
	C215	**VZ354000**	Ceramic Capacitor-F	0.01 50V Z				01
	C301	**VZ354600**	Monolithic Ceramic Cap.	0.1 50V Z				01
	C302	**UR877100**	Electrolytic Cap.	10.00 63.0V				01
	C303	**VZ354600**	Monolithic Ceramic Cap.	0.1 50V Z				01
	C304	**VZ354600**	Monolithic Ceramic Cap.	0.1 50V Z				01
	C305	**UR877100**	Electrolytic Cap.	10.00 63.0V				01
	C306	**UR877100**	Electrolytic Cap.	10.00 63.0V				01
	C307	**UA953270**	Mylar Capacitor	2700P 50V J				01
	C308	**UR857470**	Electrolytic Cap.	47.00 35.0V				01
	C309	**VZ353500**	Ceramic Capacitor-SL	100P 50V J				01
	C310	**VV190000**	Mylar Capacitor	820P 50V J				01
	C311	**VZ354600**	Monolithic Ceramic Cap.	0.1 50V Z				01
	C312	**VZ354600**	Monolithic Ceramic Cap.	0.1 50V Z				01
	C313	**UR877100**	Electrolytic Cap.	10.00 63.0V				01
*	C314	**UA953820**	Mylar Capacitor	8200P 50V J				
	C315	**UR877100**	Electrolytic Cap.	10.00 63.0V				01
	-317	**UR877100**	Electrolytic Cap.	10.00 63.0V				01
	C318	**VZ354600**	Monolithic Ceramic Cap.	0.1 50V Z				01
	C319	**UR877100**	Electrolytic Cap.	10.00 63.0V				01
	C320	**UR877100**	Electrolytic Cap.	10.00 63.0V				01
	C321	**VZ353800**	Ceramic Cap.-B	470P 50V K				01
	C322	**VZ353800**	Ceramic Cap.-B	470P 50V K				01
	C323	**UR877100**	Electrolytic Cap.	10.00 63.0V				01
	C324	**UR877100**	Electrolytic Cap.	10.00 63.0V				01
	C325	**VZ354600**	Monolithic Ceramic Cap.	0.1 50V Z				01
	C326	**VZ354600**	Monolithic Ceramic Cap.	0.1 50V Z				01
	C327	**UR877100**	Electrolytic Cap.	10.00 63.0V				01
	C328	**VZ354600**	Monolithic Ceramic Cap.	0.1 50V Z				01
	-331	**VZ354600**	Monolithic Ceramic Cap.	0.1 50V Z				01
	C332	**UR877100**	Electrolytic Cap.	10.00 63.0V				01
	C333	**VZ354600**	Monolithic Ceramic Cap.	0.1 50V Z				01
	C334	**UR838100**	Electrolytic Cap.	100.00 16.0V				01
	C335	**UR838100**	Electrolytic Cap.	100.00 16.0V				01
	C336	**UR857470**	Electrolytic Cap.	47.00 35.0V				01
	C337	**UR877100**	Electrolytic Cap.	10.00 63.0V				01
	C338	**VZ354600**	Monolithic Ceramic Cap.	0.1 50V Z				01
	C339	**VZ354600**	Monolithic Ceramic Cap.	0.1 50V Z				01
	CN101	**--**	Connector Base Post	M2426XX 14P TE		(VV06740)		
	CN301	**VQ046400**	Connector , FFC	52044series 35P SE				01

*: New Parts

RANK: Japan only

	REF NO.	PART NO.	DESCRIPTION			REMARKS	QTY	RANK
	D101	**VD631600**	Diode	1SS133,176,HSS104				01
	-103	**VD631600**	Diode	1SS133,176,HSS104				01
	D201	**VD631600**	Diode	1SS133,176,HSS104				01
	-203	**VD631600**	Diode	1SS133,176,HSS104				01
	D301	**VD631600**	Diode	1SS133,176,HSS104				01
	EM301	**GE300670**	Ferrite Bead	BL02RN2-R62T4				02
	EM302	**GE300670**	Ferrite Bead	BL02RN2-R62T4				02
	EM303	**VV056900**	Filter, EMI	ZJSR5101-223TA				01
	-307	**VV056900**	Filter, EMI	ZJSR5101-223TA				01
	EM308	**GE300670**	Ferrite Bead	BL02RN2-R62T4				02
	-312	**GE300670**	Ferrite Bead	BL02RN2-R62T4				02
	IC101	**XQ212A00**	IC	NJM4558L-D		OP AMP		03
	IC201	**XQ212A00**	IC	NJM4558L-D		OP AMP		03
*	IC301	**XY298A00**	IC	93LC46B-I/P		DRAM 1K		02
	IC302	**IG142200**	IC	TC74HCU04AP		INVERTER		02
*	IC303	**XY296A00**	IC	UPD78082GB-XXX		MSK		05
	IC304	**XQ212A00**	IC	NJM4558L-D		OP AMP		03
*	IC305	**XY282A00**	IC	PCM3001E		ADA		07
*	IC306	**XY297A00**	IC	ZFX-2		DSP		13
	IC307	**XT810A00**	IC	MSM514260C-60TS-K		DRAM 4M		16
	IC308	**XJ607A00**	IC	NJM7805FA		5V REGULATOR		02
	J301	**VV291400**	Jumper Wire	0.6				01
	-303	**VV291400**	Jumper Wire	0.6				01
	Q101	**IA097030**	Transistor	2SA970 GR,BL				01
	Q102	**IA097030**	Transistor	2SA970 GR,BL				01
	Q103	**IC224030**	Transistor	2SC2240 GR,BL				01
	Q104	**IC224030**	Transistor	2SC2240 GR,BL				01
	Q105	**VD678500**	Digital Transistor	DTA114ES				01
	Q106	**VD678700**	Digital Transistor	DTC114ES				01
	Q107	**VD678500**	Digital Transistor	DTA114ES				01
	Q108	**IA097030**	Transistor	2SA970 GR,BL				01
	-110	**IA097030**	Transistor	2SA970 GR,BL				01
	Q111	**IC224030**	Transistor	2SC2240 GR,BL				01
	Q112	**IC1815M0**	Transistor	2SC1815 Y,GR				01
	Q113	**IC1815M0**	Transistor	2SC1815 Y,GR				01
	Q114	**VU418400**	Transistor	2SA1371 D,E				01
	Q115	**VU418600**	Transistor	2SC3468 D,E				01
	Q201	**IA097030**	Transistor	2SA970 GR,BL				01
	Q202	**IA097030**	Transistor	2SA970 GR,BL				01
	Q203	**IC224030**	Transistor	2SC2240 GR,BL				01
	Q204	**IC224030**	Transistor	2SC2240 GR,BL				01
	Q205	**VD678500**	Digital Transistor	DTA114ES				01
	Q206	**VD678700**	Digital Transistor	DTC114ES				01
	Q207	**VD678500**	Digital Transistor	DTA114ES				01
	Q208	**IA097030**	Transistor	2SA970 GR,BL				01
	-210	**IA097030**	Transistor	2SA970 GR,BL				01
	Q211	**IC224030**	Transistor	2SC2240 GR,BL				01
	Q212	**IC1815M0**	Transistor	2SC1815 Y,GR				01
	Q213	**IC1815M0**	Transistor	2SC1815 Y,GR				01
	Q214	**VU418400**	Transistor	2SA1371 D,E				01
	Q215	**VU418600**	Transistor	2SC3468 D,E				01
	Q301	**VD678700**	Digital Transistor	DTC114ES				01
	Q302	**IC1815M0**	Transistor	2SC1815 Y,GR				01
	Q303	**IC1815M0**	Transistor	2SC1815 Y,GR				01
	Q304	**VD678500**	Digital Transistor	DTA114ES				01
	Q305	**VD678700**	Digital Transistor	DTC114ES				01
	Q306	**IC1815M0**	Transistor	2SC1815 Y,GR				01
	R101	**VV313500**	Metal Film Resistor	220K 1/4 F				01
	R102	**VV313500**	Metal Film Resistor	220K 1/4 F				01
	R103	**HF454680**	Carbon Resistor	68.0 1/4 J				01
	R104	**V0030400**	Metal Film Resistor	75.0K 1/5 F				01
	-107	**V0030400**	Metal Film Resistor	75.0K 1/5 F				01
	R108	**VV066000**	Metal Film Resistor	33K 1/4 F				01
	R109	**HF454680**	Carbon Resistor	68.0 1/4 J				01
	R110	**VV066000**	Metal Film Resistor	33K 1/4 F				01
	R111	**HF457270**	Carbon Resistor	27.0K 1/4 J				01
	R112	**VZ598300**	Metal Film Resistor	510.0 1/4 F				01
	R113	**HF456150**	Carbon Resistor	1.5K 1/4 J				01
	R114	**HF455220**	Carbon Resistor	220.0 1/4 J				01
	R115	**HF458330**	Carbon Resistor	330.0K 1/4 J				01

✻: New Parts

RANK: Japan only

REF NO.	PART NO.	DESCRIPTION			REMARKS	QTY	RANK
R116	**HF456220**	Carbon Resistor	2.2K 1/4 J				01
R117	**HF456220**	Carbon Resistor	2.2K 1/4 J				01
R118	**HF457470**	Carbon Resistor	47.0K 1/4 J				01
R119	**HF455330**	Carbon Resistor	330.0 1/4 J				01
R120	**HF458390**	Carbon Resistor	390.0K 1/4 J				01
R121	**HF458390**	Carbon Resistor	390.0K 1/4 J				01
R122	**HF458330**	Carbon Resistor	330.0K 1/4 J				01
R123	**HF457220**	Carbon Resistor	22.0K 1/4 J				01
R124	**HF457220**	Carbon Resistor	22.0K 1/4 J				01
R125	**HF455560**	Carbon Resistor	560.0 1/4 J				01
R126	**HF455100**	Carbon Resistor	100.0 1/4 J				01
R127	**HF455100**	Carbon Resistor	100.0 1/4 J				01
R128	**HF455560**	Carbon Resistor	560.0 1/4 J				01
R129	**HF455560**	Carbon Resistor	560.0 1/4 J				01
R130	**VB068100**	Metal Film Resistor	22.0K 1/5 F				01
R131	**HF457470**	Carbon Resistor	47.0K 1/4 J				01
R132	**HF457470**	Carbon Resistor	47.0K 1/4 J				01
R133	**HF455330**	Carbon Resistor	330.0 1/4 J				01
R134	**HF455330**	Carbon Resistor	330.0 1/4 J				01
R201	**VV313500**	Metal Film Resistor	220K 1/4 F				01
R202	**VV313500**	Metal Film Resistor	220K 1/4 F				01
R203	**HF454680**	Carbon Resistor	68.0 1/4 J				01
R204	**V0030400**	Metal Film Resistor	75.0K 1/5 F				01
-207	**V0030400**	Metal Film Resistor	75.0K 1/5 F				01
R208	**VV066000**	Metal Film Resistor	33K 1/4 F				01
R209	**HF454680**	Carbon Resistor	68.0 1/4 J				01
R210	**VV066000**	Metal Film Resistor	33K 1/4 F				01
R211	**HF457270**	Carbon Resistor	27.0K 1/4 J				01
R212	**VZ598300**	Metal Film Resistor	510.0 1/4 F				01
R213	**HF456150**	Carbon Resistor	1.5K 1/4 J				01
R214	**HF455220**	Carbon Resistor	220.0 1/4 J				01
R215	**HF458330**	Carbon Resistor	330.0K 1/4 J				01
R216	**HF456220**	Carbon Resistor	2.2K 1/4 J				01
R217	**HF456220**	Carbon Resistor	2.2K 1/4 J				01
R218	**HF457470**	Carbon Resistor	47.0K 1/4 J				01
R219	**HF455330**	Carbon Resistor	330.0 1/4 J				01
R220	**HF458390**	Carbon Resistor	390.0K 1/4 J				01
R221	**HF458390**	Carbon Resistor	390.0K 1/4 J				01
R222	**HF458330**	Carbon Resistor	330.0K 1/4 J				01
R223	**HF457220**	Carbon Resistor	22.0K 1/4 J				01
R224	**HF457220**	Carbon Resistor	22.0K 1/4 J				01
R225	**HF455560**	Carbon Resistor	560.0 1/4 J				01
R226	**HF455100**	Carbon Resistor	100.0 1/4 J				01
R227	**HF455100**	Carbon Resistor	100.0 1/4 J				01
R228	**HF455560**	Carbon Resistor	560.0 1/4 J				01
R229	**HF455560**	Carbon Resistor	560.0 1/4 J				01
R230	**VB068100**	Metal Film Resistor	22.0K 1/5 F				01
R231	**HF457470**	Carbon Resistor	47.0K 1/4 J				01
R232	**HF457470**	Carbon Resistor	47.0K 1/4 J				01
R233	**HF455330**	Carbon Resistor	330.0 1/4 J				01
R234	**HF455330**	Carbon Resistor	330.0 1/4 J				01
R301	**HF455100**	Carbon Resistor	100.0 1/4 J				01
-315	**HF455100**	Carbon Resistor	100.0 1/4 J				01
R316	**HF457100**	Carbon Resistor	10.0K 1/4 J				01
R317	**HF457220**	Carbon Resistor	22.0K 1/4 J				01
R318	**HF457100**	Carbon Resistor	10.0K 1/4 J				01
R319	**HF457220**	Carbon Resistor	22.0K 1/4 J				01
R320	**HF457100**	Carbon Resistor	10.0K 1/4 J				01
R321	**HF457220**	Carbon Resistor	22.0K 1/4 J				01
-330	**HF457220**	Carbon Resistor	22.0K 1/4 J				01
R331	**HF457100**	Carbon Resistor	10.0K 1/4 J				01
R332	**HF457220**	Carbon Resistor	22.0K 1/4 J				01
R333	**HF456100**	Carbon Resistor	1.0K 1/4 J				01
R334	**HF459100**	Carbon Resistor	1.0M 1/4 J				01
R335	**HF459100**	Carbon Resistor	1.0M 1/4 J				01
R336	**HF457220**	Carbon Resistor	22.0K 1/4 J				01
R337	**HF457100**	Carbon Resistor	10.0K 1/4 J				01
R338	**HF457220**	Carbon Resistor	22.0K 1/4 J				01
-342	**HF457220**	Carbon Resistor	22.0K 1/4 J				01
R343	**HF456100**	Carbon Resistor	1.0K 1/4 J				01

※: New Parts

RANK: Japan only

	REF NO.	PART NO.	DESCRIPTION			REMARKS	QTY	RANK
	R344	**HF457270**	Carbon Resistor	27.0K 1/4 J				01
	R345	**HF456300**	Carbon Resistor	3.0K 1/4 J				01
	R346	**HF457300**	Carbon Resistor	30.0K 1/4 J				01
	R347	**HF459100**	Carbon Resistor	1.0M 1/4 J				01
	R348	**HF457100**	Carbon Resistor	10.0K 1/4 J				01
	R349	**HF458100**	Carbon Resistor	100.0K 1/4 J				01
	R350	**HF458100**	Carbon Resistor	100.0K 1/4 J				01
	R351	**HF456100**	Carbon Resistor	1.0K 1/4 J				01
	R352	**HF457220**	Carbon Resistor	22.0K 1/4 J				01
	R353	**HF457680**	Carbon Resistor	68.0K 1/4 J				01
	R354	**HF456910**	Carbon Resistor	9.1K 1/4 J				01
	R355	**HF456130**	Carbon Resistor	1.3K 1/4 J				01
	R356	**HF457220**	Carbon Resistor	22.0K 1/4 J				01
	R357	**HF453220**	Carbon Resistor	2.2 1/4 J				01
	-359	**HF453220**	Carbon Resistor	2.2 1/4 J				01
	R360	**V4566800**	Meta Oxide Film Resistor	47 2W J				
	R361	**HF457220**	Carbon Resistor	22.0K 1/4 J				01
	-363	**HF457220**	Carbon Resistor	22.0K 1/4 J				01
	X301	**VD827600**	Ceramic Resonator	0.1% 4.0MHZ				02
*		**V5227100**	Circuit Board	PWR		J (XY324A00)		
*		**V5227200**	Circuit Board	PWR		U,V (XY324A00)		
*		**V5227300**	Circuit Board	PWR		H,W,B,A (XY324A00)		
		V3225000	Ferrite Core	FR25/15/12-D40				03
		VV319600	Fuse Holder	CQ-05CT			6	01
		VV291400	Jumper Wire	0.6			100	01
	C103	**UR877100**	Electrolytic Cap.	10.00 63.0V				01
	C104	**UR877100**	Electrolytic Cap.	10.00 63.0V				01
	C105	**VZ354000**	Ceramic Capacitor-F	0.01 50V Z				01
	C106	**VZ354000**	Ceramic Capacitor-F	0.01 50V Z				01
	C107	**UA953220**	Mylar Capacitor	2200P 50V J				01
	C108	**V4567500**	Ceramic Capacitor-SL	10P 500V K				
	C109	**V4567500**	Ceramic Capacitor-SL	10P 500V K				
	C112	**UR877100**	Electrolytic Cap.	10.00 63.0V				01
	C113	**UR877100**	Electrolytic Cap.	10.00 63.0V				01
	C114	**V4567500**	Ceramic Capacitor-SL	10P 500V K				
	C115	**V4567500**	Ceramic Capacitor-SL	10P 500V K				
	C116	**VZ354000**	Ceramic Capacitor-F	0.01 50V Z				01
	C117	**VZ354000**	Ceramic Capacitor-F	0.01 50V Z				01
	C118	**UA953220**	Mylar Capacitor	2200P 50V J				01
	C119	**UR897100**	Electrolytic Cap.	10.0 100.0V				01
	C120	**UR897100**	Electrolytic Cap.	10.0 100.0V				01
	C121	**V3280500**	Ceramic Capacitor-B	100P 500 K				01
	C122	**V3280500**	Ceramic Capacitor-B	100P 500 K				01
	C123	**VV082200**	Mylar Capacitor	3.3 100V M				03
	C124	**VV082200**	Mylar Capacitor	3.3 100V M				03
	C125	**UR897100**	Electrolytic Cap.	10.0 100.0V				01
	C126	**UR897100**	Electrolytic Cap.	10.0 100.0V				01
	C127	**VV314600**	Ceramic Capacitor-B	0.0022 500V K				01
	C128	**VV314600**	Ceramic Capacitor-B	0.0022 500V K				01
	C129	**V5307900**	Electrolytic Cap.	100 100.0V				
	C130	**V5307900**	Electrolytic Cap.	100 100.0V				
	C131	**VV330700**	Electrolytic Cap.	470.00 10.0V				01
	C132	**UR857470**	Electrolytic Cap.	47.00 35.0V				01
	C133	**UR877100**	Electrolytic Cap.	10.00 63.0V				01
	-135	**UR877100**	Electrolytic Cap.	10.00 63.0V				01
	C136	**V5482000**	Electrolytic Cap.	1000 35.0V				
	-139	**V5482000**	Electrolytic Cap.	1000 35.0V				
	C140	**UR877100**	Electrolytic Cap.	10.00 63.0V				01
	C141	**UR877100**	Electrolytic Cap.	10.00 63.0V				01
	C142	**VY897000**	Electrolytic Cap.	6800 100V				08
	C143	**VY897000**	Electrolytic Cap.	6800 100V				08
	C144	**VV082300**	Mylar Capacitor	0.1 250V M				01
	C145	**VV082300**	Mylar Capacitor	0.1 250V M				01
	C146	**VZ354000**	Ceramic Capacitor-F	0.01 50V Z				01
	C147	**VZ354600**	Monolithic Ceramic Cap.	0.1 50V Z				01
	C148	**VZ354600**	Monolithic Ceramic Cap.	0.1 50V Z				01
*	C149	**UR896470**	Electrolytic Cap.	4.7 100.0V				
	C150	**V3280500**	Ceramic Capacitor-B	100P 500 K				01
	C151	**VY704000**	Capacitor	4700P 400V J.U.C.S		U,V,H,W,B,A		01

✻: New Parts

RANK: Japan only

REF NO.	PART NO.	DESCRIPTION			REMARKS	QTY	RANK
C152	**VZ353500**	Ceramic Capacitor-SL	100P 50V J				01
C153	**VZ354600**	Monolithic Ceramic Cap.	0.1 50V Z				01
C154	**VZ354600**	Monolithic Ceramic Cap.	0.1 50V Z				01
C155	**VZ353500**	Ceramic Capacitor-SL	100P 50V J				01
C156	**VV314800**	Capacitor	1000P 400V J.U.C.S				01
C157	**VV520600**	Capacitor	0.01 400V J.U.C.S				02
C158	**VY704000**	Capacitor	4700P 400V J.U.C.S		U,V,H,W,B,A		01
C159	**VZ354000**	Ceramic Capacitor-F	0.01 50V Z				01
C160	**VZ354000**	Ceramic Capacitor-F	0.01 50V Z				01
CN101	--	Connector Base Post	M2426XX 14P TE		(VV06740)		
CN102	**LB933040**	Base Post Connector	VH- 4P SE				01
CN103	**LB932060**	Base Post Connector	VH- 6P TE				01
CN104	**VV066200**	Connector Base Post	M2426XX 2P TE				01
CN105	**LB933030**	Base Post Connector	VH- 3P SE				01
CN106	**LB933030**	Base Post Connector	VH- 3P SE				01
D101	**VD631600**	Diode	1SS133,176,HSS104				01
-104	**VD631600**	Diode	1SS133,176,HSS104				01
D105	**VG437700**	Zener Diode	MTZ J 5.6B 5.6V				01
D106	**VD631600**	Diode	1SS133,176,HSS104				01
D107	**IF005560**	Diode	1SS82TD				01
D108	**IF005560**	Diode	1SS82TD				01
D109	**VD631600**	Diode	1SS133,176,HSS104				01
D110	**VG437700**	Zener Diode	MTZ J 5.6B 5.6V				01
D111	**IF005560**	Diode	1SS82TD				01
D112	**IF005560**	Diode	1SS82TD				01
D113	**VN478200**	Diode	D1NL20U				01
D114	**VN478200**	Diode	D1NL20U				01
D115	**VU801600**	Diode	1N4004L 26				01
D116	**VU801600**	Diode	1N4004L 26				01
D117	**VD631600**	Diode	1SS133,176,HSS104				01
-120	**VD631600**	Diode	1SS133,176,HSS104				01
D121	**VG437700**	Zener Diode	MTZ J 5.6B 5.6V				01
D122	**VN478200**	Diode	D1NL20U				01
D123	**IF005560**	Diode	1SS82TD				01
D124	**VD631600**	Diode	1SS133,176,HSS104				01
D125	**IF005560**	Diode	1SS82TD				01
D126	**IF005560**	Diode	1SS82TD				01
D127	**VD631600**	Diode	1SS133,176,HSS104				01
D128	**IF005560**	Diode	1SS82TD				01
D129	**VG437700**	Zener Diode	MTZ J 5.6B 5.6V				01
D130	**VN478200**	Diode	D1NL20U				01
D131	**VU801600**	Diode	1N4004L 26				01
D132	**VU801600**	Diode	1N4004L 26				01
D133	**VR149700**		D8LD40 8.0A 400V				04
D134	**VU801600**	Diode	1N4004L 26				01
D135	**VS135800**		FMX-22S 10.0A 200V				03
D136	**VR149700**		D8LD40 8.0A 400V				04
D137	**VU801600**	Diode	1N4004L 26				01
D138	**VS135800**		FMX-22S 10.0A 200V				03
D139	**VU801600**	Diode	1N4004L 26				01
D140	**VD631600**	Diode	1SS133,176,HSS104				01
D141	**VU801600**	Diode	1N4004L 26				01
D142	**VU801600**	Diode	1N4004L 26				01
D143	**VG438900**	Zener Diode	MTZ J 8.2B 8.2V				01
D144	**V2261600**	Diode Stack	RBV-1306 13.0A 600				04
D145	**VU801600**	Diode	1N4004L 26				01
-149	**VU801600**	Diode	1N4004L 26				01
E101	**VV075700**	Terminal Plate					01
E102	**VV075700**	Terminal Plate					01
⚠ F101	**VV070600**	Fuse	TDS 2A 250V J/U/C		J,U,V		01
⚠ F101	**VV071500**	Fuse	TSD 2A 250V SEMKO		H,W,B,A		01
⚠ F102	**VV070600**	Fuse	TDS 2A 250V J/U/C		J,U,V		01
⚠ F102	**VV071500**	Fuse	TSD 2A 250V SEMKO		H,W,B,A		01
⚠ F103	**KB001380**	Fuse	15.00A U		J		04
⚠ F103	**KB001540**	Fuse	12.00A UL		U,V		04
⚠ F103	**KB003360**	Fuse	6.30A S		H,W,B,A		02
IC101	**XD853A00**	IC	NJM7815FA		REGULATOR +15V		03
IC102	**XD854A00**	IC	NJM7915FA		REGULATOR -15V		03
JK101	**VV089300**	Phone Jack	H30280072N		SPEAKERS(POWER AMP1-A,B,		02
-105	**VV089300**	Phone Jack	H30280072N		BRIDGE,POWER AMP2-A,B)		02

✻: New Parts

RANK: Japan only

	REF NO.	PART NO.	DESCRIPTION			REMARKS	QTY	RANK
	L101	**V4668300**	Coil	OH-20 100UH				
	L102	**V4668300**	Coil	OH-20 100UH				
	L103	**GE300670**	Ferrite Bead	BL02RN2-R62T4				02
	L104	**GE300670**	Ferrite Bead	BL02RN2-R62T4				02
	L105	**VR150900**	Coil	RZ-001 21MM				02
	L106	**VR150900**	Coil	RZ-001 21MM				02
	PR101	**VL964800**	Positive Thermistor	PTH9M04BH222TS2				04
	PR102	**VL965100**	Positive Thermistor	PTH9M04BE222TS2				04
	Q101	**VU418400**	Transistor	2SA1371 D,E				01
	Q102	**VU418600**	Transistor	2SC3468 D,E				01
	Q103	**V2797700**	Transistor	2SC5395 E,F				01
	Q104	**V2797600**	Transistor	2SA1993 E,F				01
	Q105	**VU418600**	Transistor	2SC3468 D,E				01
	Q106	**VU418400**	Transistor	2SA1371 D,E				01
	Q107N	**VR732800**	Transistor	A1859A/C4883A				04
	Q107P	**VR732800**	Transistor	A1859A/C4883A				04
*	Q108N	**V5611000**	Pair Transistor	A1386A/C3519A				05
*	Q108P	**V5611000**	Pair Transistor	A1386A/C3519A				05
*	Q109N	**V5611000**	Pair Transistor	A1386A/C3519A				05
*	Q109P	**V5611000**	Pair Transistor	A1386A/C3519A				05
	Q110	**VU418400**	Transistor	2SA1371 D,E				01
	Q111	**VU418600**	Transistor	2SC3468 D,E				01
	Q112	**V2797700**	Transistor	2SC5395 E,F				01
	Q113	**V2797600**	Transistor	2SA1993 E,F				01
	Q114	**VU418600**	Transistor	2SC3468 D,E				01
	Q115	**VU418400**	Transistor	2SA1371 D,E				01
	Q116N	**VR732800**	Transistor	A1859A/C4883A				04
	Q116P	**VR732800**	Transistor	A1859A/C4883A				04
*	Q117N	**V5611000**	Pair Transistor	A1386A/C3519A				05
*	Q117P	**V5611000**	Pair Transistor	A1386A/C3519A				05
*	Q118N	**V5611000**	Pair Transistor	A1386A/C3519A				05
*	Q118P	**V5611000**	Pair Transistor	A1386A/C3519A				05
	Q119	**VU418600**	Transistor	2SC3468 D,E				01
	Q120	**VU418400**	Transistor	2SA1371 D,E				01
	Q121N	**VR732800**	Transistor	A1859A/C4883A				04
	Q121P	**VR732800**	Transistor	A1859A/C4883A				04
	Q122N	**V5611000**	Pair Transistor	A1386A/C3519A				05
	Q122P	**V5611000**	Pair Transistor	A1386A/C3519A				05
	Q123N	**V5611000**	Pair Transistor	A1386A/C3519A				05
	Q123P	**V5611000**	Pair Transistor	A1386A/C3519A				05
	Q124N	**VR732800**	Transistor	A1859A/C4883A				04
	Q124P	**VR732800**	Transistor	A1859A/C4883A				04
*	Q125N	**V5611000**	Pair Transistor	A1386A/C3519A				05
*	Q125P	**V5611000**	Pair Transistor	A1386A/C3519A				05
*	Q126N	**V5611000**	Pair Transistor	A1386A/C3519A				05
*	Q126P	**V5611000**	Pair Transistor	A1386A/C3519A				05
*	Q127N	**V5611000**	Pair Transistor	A1386A/C3519A				05
*	Q127P	**V5611000**	Pair Transistor	A1386A/C3519A				05
	Q128	**V2797700**	Transistor	2SC5395 E,F				01
	Q129	**V2797700**	Transistor	2SC5395 E,F				01
	Q130	**V2797600**	Transistor	2SA1993 E,F				01
	Q131	**V2797700**	Transistor	2SC5395 E,F				01
	Q132	**VS883400**	Transistor	2SD2394 E,F				02
	Q133	**IC1815M0**	Transistor	2SC1815 Y,GR				01
	R101	**HF455220**	Carbon Resistor	220.0 1/4 J				01
	R102	**HF455220**	Carbon Resistor	220.0 1/4 J				01
	R103	**HF457470**	Carbon Resistor	47.0K 1/4 J				01
	-106	**HF457470**	Carbon Resistor	47.0K 1/4 J				01
	R107	**HF457120**	Carbon Resistor	12.0K 1/4 J				01
	R108	**HF457120**	Carbon Resistor	12.0K 1/4 J				01
	R109	**VV313800**	Flame Proof C. Resistor	220.0 1/4 J				01
	R110	**VV313800**	Flame Proof C. Resistor	220.0 1/4 J				01
	R111	**VZ009300**	Flame Proof C. Resistor	330.0 1/4 J				01
	R112	**VZ009300**	Flame Proof C. Resistor	330.0 1/4 J				01
	R113	**VV276800**	Flame Proof C. Resistor	100 1/4 J				01
	-116	**VV276800**	Flame Proof C. Resistor	100 1/4 J				01
	R117	**VZ009100**	Flame Proof C. Resistor	33.0 1/4 J				01
	R118	**VZ009100**	Flame Proof C. Resistor	33.0 1/4 J				01
	R119	**VZ008800**	Flame Proof C. Resistor	22.0 1/4 J				01
	R120	**VZ008800**	Flame Proof C. Resistor	22.0 1/4 J				01

※: New Parts

RANK: Japan only

REF NO.	PART NO.	DESCRIPTION			REMARKS	QTY	RANK
R121	**V4833200**	Wire Wound Resistor	0.22 5W K				
-124	**V4833200**	Wire Wound Resistor	0.22 5W K				
R125	**VZ008800**	Flame Proof C. Resistor	22.0 1/4 J				01
R126	**VZ008800**	Flame Proof C. Resistor	22.0 1/4 J				01
R127	**VZ009100**	Flame Proof C. Resistor	33.0 1/4 J				01
R128	**VZ009100**	Flame Proof C. Resistor	33.0 1/4 J				01
R129	**HF455220**	Carbon Resistor	220.0 1/4 J				01
R130	**HF455220**	Carbon Resistor	220.0 1/4 J				01
R131	**HF457470**	Carbon Resistor	47.0K 1/4 J				01
-134	**HF457470**	Carbon Resistor	47.0K 1/4 J				01
R135	**HF457120**	Carbon Resistor	12.0K 1/4 J				01
R136	**HF457120**	Carbon Resistor	12.0K 1/4 J				01
R137	**VV313800**	Flame Proof C. Resistor	220.0 1/4 J				01
R138	**VV313800**	Flame Proof C. Resistor	220.0 1/4 J				01
R139	**VZ009300**	Flame Proof C. Resistor	330.0 1/4 J				01
R140	**VZ009300**	Flame Proof C. Resistor	330.0 1/4 J				01
R141	**VV276800**	Flame Proof C. Resistor	100 1/4 J				01
R142	**VV276800**	Flame Proof C. Resistor	100 1/4 J				01
R143	**VV276800**	Flame Proof C. Resistor	100 1/4 J				01
R144	**VV276800**	Flame Proof C. Resistor	100 1/4 J				01
R145	**VZ009100**	Flame Proof C. Resistor	33.0 1/4 J				01
R146	**VZ009100**	Flame Proof C. Resistor	33.0 1/4 J				01
R147	**VZ008800**	Flame Proof C. Resistor	22.0 1/4 J				01
R148	**VZ008800**	Flame Proof C. Resistor	22.0 1/4 J				01
R149	**V4833200**	Wire Wound Resistor	0.22 5W K				
-152	**V4833200**	Wire Wound Resistor	0.22 5W K				
R153	**VZ008800**	Flame Proof C. Resistor	22.0 1/4 J				01
R154	**VZ008800**	Flame Proof C. Resistor	22.0 1/4 J				01
R155	**VZ009100**	Flame Proof C. Resistor	33.0 1/4 J				01
R156	**VZ009100**	Flame Proof C. Resistor	33.0 1/4 J				01
R157	**HF456560**	Carbon Resistor	5.6K 1/4 J				01
R158	**VZ008800**	Flame Proof C. Resistor	22.0 1/4 J				01
R159	**VZ008700**	Flame Proof C. Resistor	2.2K 1/4 J				01
R160	**VZ008600**	Flame Proof C. Resistor	150.0 1/4 J				01
R161	**VV313600**	Flame Proof C. Resistor	2.2 1/4 J				05
R162	**VV313600**	Flame Proof C. Resistor	2.2 1/4 J				05
R163	**VZ370200**	Wire Wound Resistor	0.1 5W K				01
R164	**VZ370200**	Wire Wound Resistor	0.1 5W K				01
R165	**VV313600**	Flame Proof C. Resistor	2.2 1/4 J				05
R166	**VV276700**	Flame Proof C. Resistor	4.7 1/4 J				01
R167	**VV276700**	Flame Proof C. Resistor	4.7 1/4 J				01
R168	**VV313600**	Flame Proof C. Resistor	2.2 1/4 J				05
-171	**VV313900**	Flame Proof C. Resistor	680.0 1/4 J				01
R172	**HF456560**	Carbon Resistor	5.6K 1/4 J				01
R173	**VZ008800**	Flame Proof C. Resistor	22.0 1/4 J				01
R174	**VZ008700**	Flame Proof C. Resistor	2.2K 1/4 J				01
R175	**VZ008600**	Flame Proof C. Resistor	150.0 1/4 J				01
R176	**VV313600**	Flame Proof C. Resistor	2.2 1/4 J				05
R177	**VV313600**	Flame Proof C. Resistor	2.2 1/4 J				05
R178	**VZ370200**	Wire Wound Resistor	0.1 5W K				01
R179	**VZ370200**	Wire Wound Resistor	0.1 5W K				01
R180	**VV313600**	Flame Proof C. Resistor	2.2 1/4 J				05
R181	**VV276700**	Flame Proof C. Resistor	4.7 1/4 J				01
R182	**VV276700**	Flame Proof C. Resistor	4.7 1/4 J				01
R183	**VV313600**	Flame Proof C. Resistor	2.2 1/4 J				05
-185	**VV313600**	Flame Proof C. Resistor	2.2 1/4 J				05
R186	**VV313900**	Flame Proof C. Resistor	680.0 1/4 J				01
R187	**HF458150**	Carbon Resistor	150.0K 1/4 J				01
R188	**HF458150**	Carbon Resistor	150.0K 1/4 J				01
R189	**HF456470**	Carbon Resistor	4.7K 1/4 J				01
R190	**HF457560**	Carbon Resistor	56.0K 1/4 J				01
R191	**HF457100**	Carbon Resistor	10.0K 1/4 J				01
R192	**HF457100**	Carbon Resistor	10.0K 1/4 J				01
R193	**HF456220**	Carbon Resistor	2.2K 1/4 J				01
R194	**HF457120**	Carbon Resistor	12.0K 1/4 J				01
R195	**VV313800**	Flame Proof C. Resistor	220.0 1/4 J				01
R196	**VV313800**	Flame Proof C. Resistor	220.0 1/4 J				01
R197	**HF455100**	Carbon Resistor	100.0 1/4 J				01
R198	**HF456220**	Carbon Resistor	2.2K 1/4 J				01
R199	**HF457120**	Carbon Resistor	12.0K 1/4 J				01

※: New Parts

RANK: Japan only

	REF NO.	PART NO.	DESCRIPTION			REMARKS	QTY	RANK
	R200	**HF457560**	Carbon Resistor	56.0K 1/4 J				01
	R201	**VV058500**	Flame Proof C. Resistor	10.0 1/4 J				01
	-204	**VV058500**	Flame Proof C. Resistor	10.0 1/4 J				01
	R205	**HF455560**	Carbon Resistor	560.0 1/4 J				01
	-208	**HF455560**	Carbon Resistor	560.0 1/4 J				01
	RY101	**VV315400**	Relay	DC OSA-SH-224DM3M				06
	RY102	**VV315400**	Relay	DC OSA-SH-224DM3M				06
	SW101	**VY898100**	Push Switch	SDDFA3107U-YL UCS		POWER ON/OFF		05
	W101	**--**	Connector Assembly	B&C #18 4P		(V522750)		
*		**XY325B00**	Power Transformer			J		
*		**XY326A00**	Power Transforme			U,V		
*		**XY327B00**	Power Transforme			H,W,B		
*		**XY328A00**	Power Transforme			A		
		V2955500	Fan	3110KL05WB50L34				08
		V3277000	AC Cord	J VCTF 2X0.75 7A		J		05
		VV205600	AC Cord	UC SJT 3X#18 10A		U,V		06
		V3277100	AC Cord	E H05VV-F3X0.7510A		H,W,A		06
		VV058300	AC Cord	BS H05VV-F3X0.75		B		08

*: New Parts

RANK: Japan only

EMX660

■ EMX660 CIRCUIT BOARDS & WIRING

●MIX Circuit Board

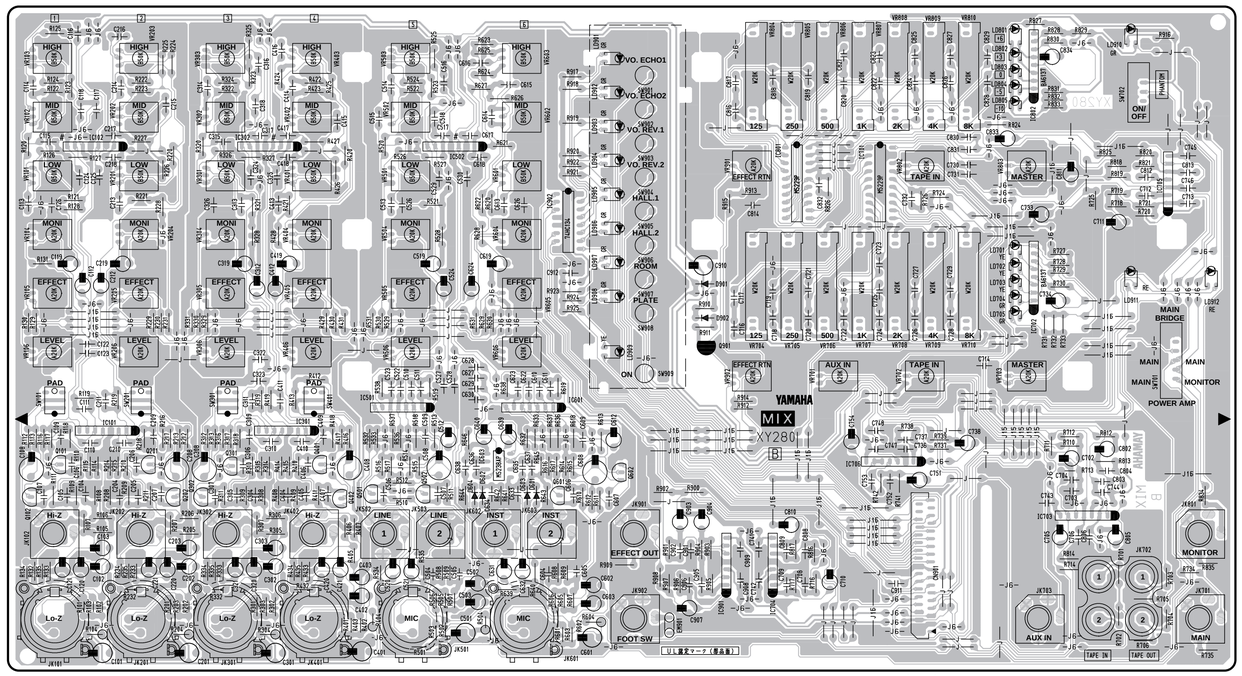

●SUB Circuit Board

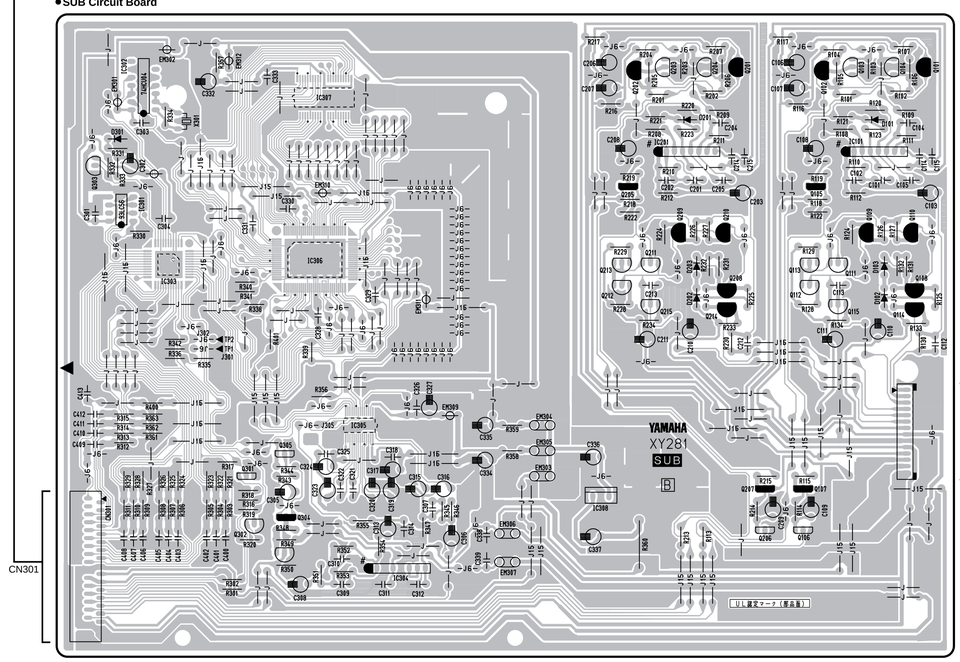

●PWR 1/3 Circuit Board

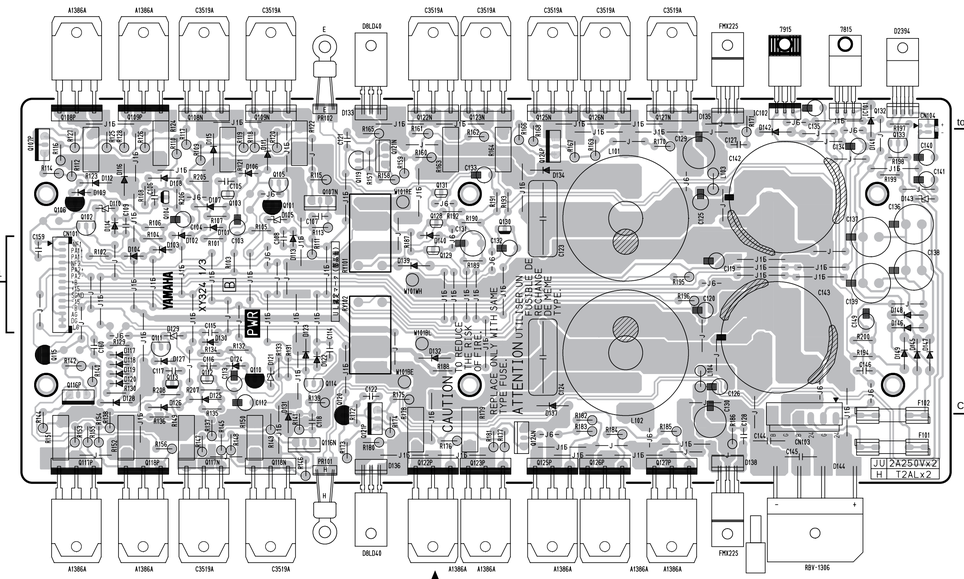

●PWR 2/3 Circuit Board

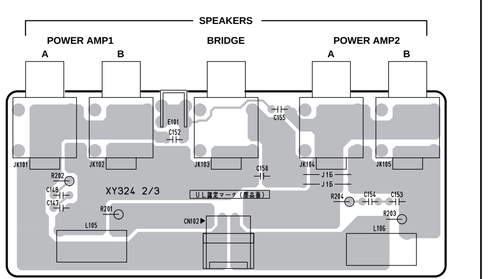

●PWR 3/3 Circuit Board

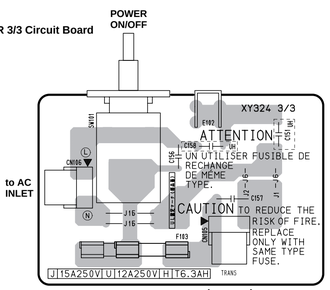

DM: 2NA-V466260 ⚠
SUB: 3NA-V511100 ⚠
PWR1/3: 3NA-V522710 ⚠
PWR2/3: 3NA-V522710 ⚠
PWR3/3: 3NA-V522710 ⚠

EMX660

■EMX660 OVERALL CIRCUIT DIAGRAM (MIX) 1/2

EMX660

MIX

CH1 IN

CH2 IN

CH3 IN

CH4 IN

CH5 IN

CH6 IN

OPAMP

KEC-92544-2

KEC-92544-3

KEC-92544-4

KEC-92544-5

G.EQUALIZER

LED DRIVER

DECODER

to SUB-CN301

EMX660

■EMX660 OVERALL CIRCUIT DIAGRAM (SUB, PWR 1/3, 2/3, 3/3) 2/2

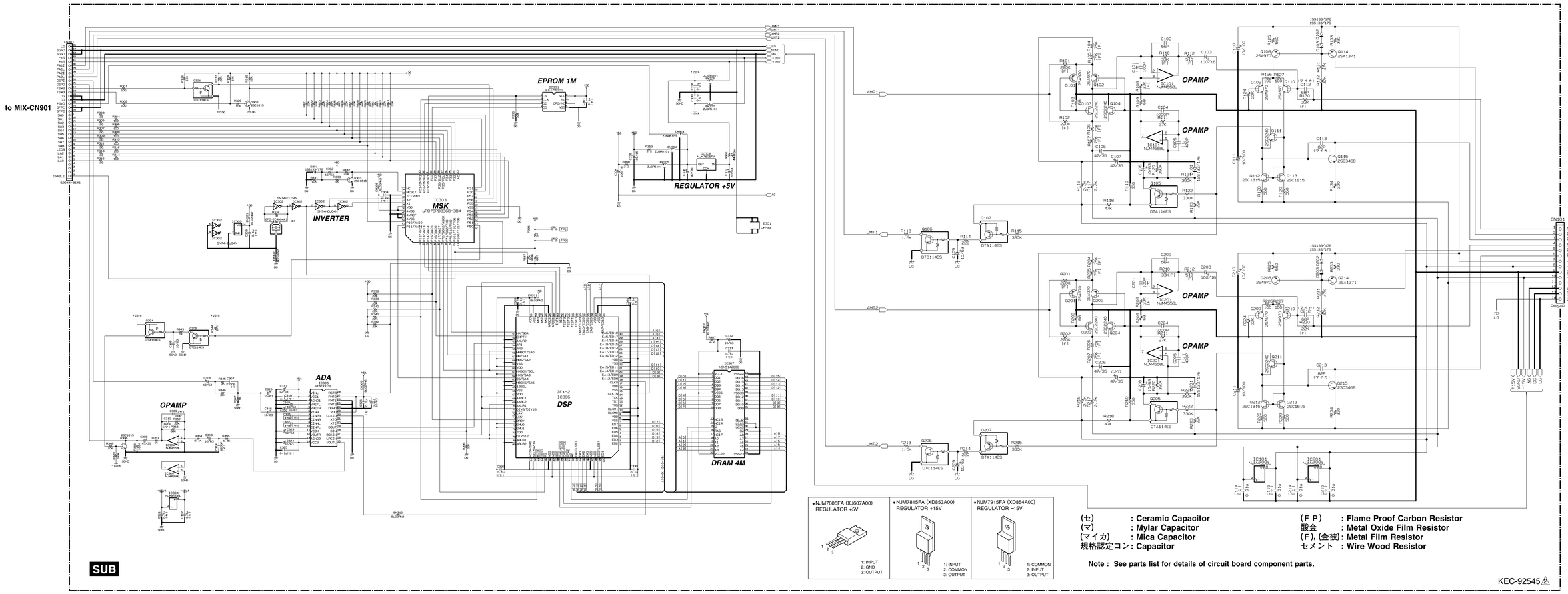

(セ)	: Ceramic Capacitor	(Ｆ Ｐ) : Flame Proof Carbon Resistor
(マ)	: Mylar Capacitor	酸金 : Metal Oxide Film Resistor
(マイカ)	: Mica Capacitor	(Ｆ), (金被) : Metal Film Resistor
規格認定コン	: Capacitor	セメント : Wire Wood Resistor

Note : See parts list for details of circuit board component parts.

●NJM7805FA (XJ607A00) REGULATOR +5V	●NJM7815FA (XD853A00) REGULATOR +15V	●NJM7915FA (XD854A00) REGULATOR −15V
1: INPUT 2: GND 3: OUTPUT	1: INPUT 2: COMMON 3: OUTPUT	1: COMMON 2: INPUT 3: OUTPUT

KEC-92545

■BLOCK DIAGRAM & LEVEL DIAGRAM

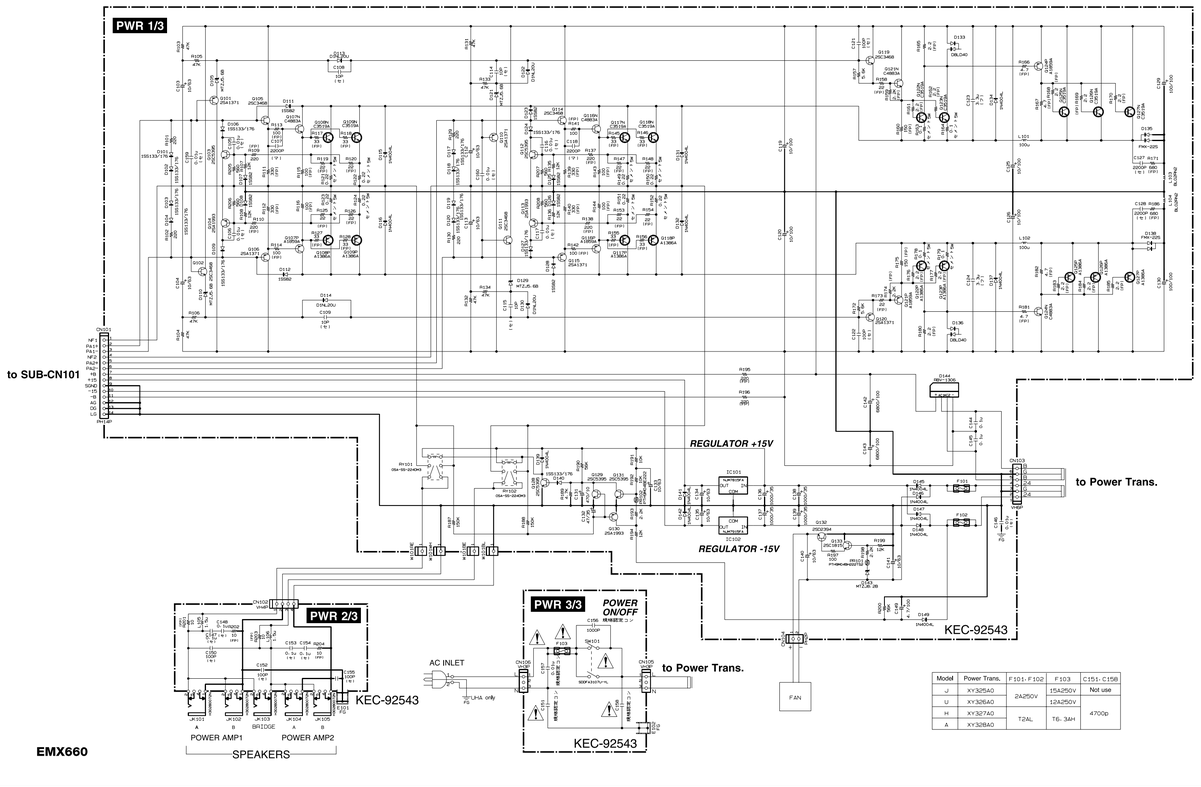

Model	Power Trans.	F101-F102	F103	C151-C158
J	XY325A0	2A/250V	15A/250V	Not use
U	XY326A0		12A/250V	
H	XY327A0	T2AL	T6.3AH	4700p
A	XY328A0			

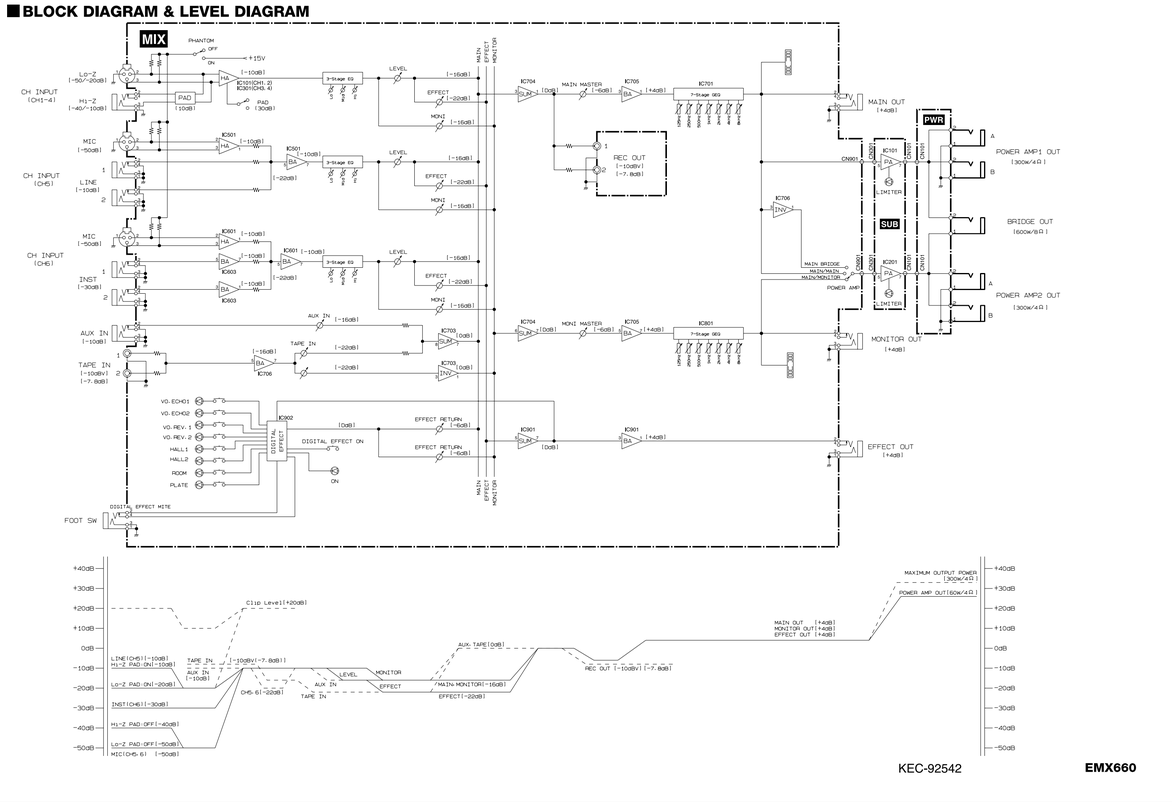

KEC-92542