EMX5000-12/20

POWERED MIXER

SERVICE MANUAL

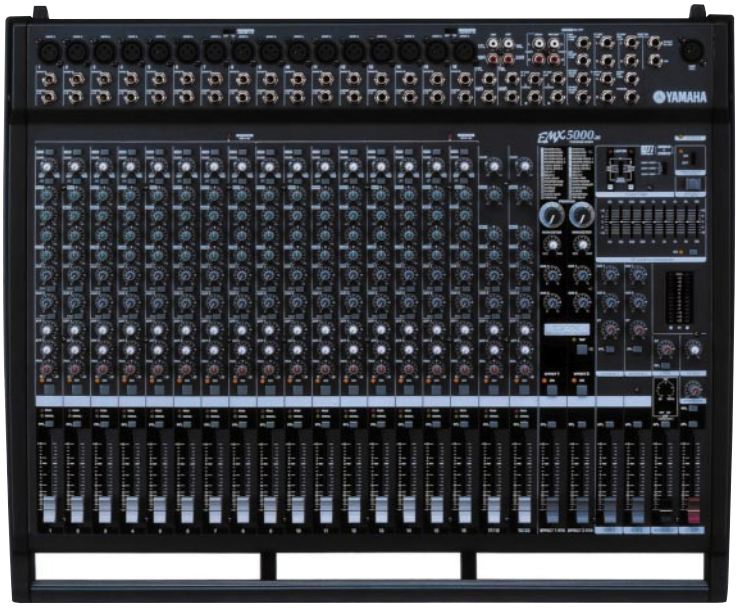

EMX5000-20

CONTENTS

SPECIFICATIONS 3/5
PANEL LAYOUT 7
CIRCUIT BOARD LAYOUT 11
BLOCK & LEVEL DIAGRAM 12

WIRING 14
DIMENSIONS 14
DISASSEMBLY PROCEDURE 15
LSI PIN DESCRIPTION 20
IC BLOCK DIAGRAM 23
CIRCUIT BOARDS 24
INSPECTIONS 39/46
CIRCUIT DIAGRAMS 54
PARTS LIST

This document is printed on chlorine free (ECF) paper with soy ink.

PA 011633

YAMAHA
HAMAMATSU, JAPAN
1.387K-9551 Printed in Japan 2002.3

IMPOR TANT NOTICE

This manual has been provided for the use of authorized Yamaha Retailers and their service personnel. It has been assumed that basic service procedures inherent to the industry, and more specifically Yamaha Products, are already known and understood by the users, and have therefore not been restated.

WARNING : Failure to follow appropriate service and safety procedures when servicing this product may result in personal injury, destruction of expensive components and failure of the product to perform as specified. For these reasons, we advise all Yamaha product owners that all service required should be performed by an authorized Yamaha Retailer or the appointed service representative.

IMPORTANT : This presentation or sale of this manual to any individual or firm does not constitute authorization certification, recognition of any applicable technical capabilities, or establish a principal-agent relationship of any form.

The data provided is belived to be accurate and applicable to the unit(s) indicated on the cover. The research engineering, and service departments of Yamaha are continually striving to improve Yamaha products. Modifications are, therefore, inevitable and changes in specification are subject to change without notice or obligation to retrofit. Should any discrepancy appear to exist, please contact the distributor's Service Division.

WARNING : Static discharges can destroy expensive components. Discharge any static electricity your body may have accumulated by grounding yourself to the ground bus in the unit (heavy gauge black wires connect to this bus.)

IMPORTANT : Turn the unit OFF during disassembly and parts replacement. Recheck all work before you apply power to the unit.

WARNING: CHEMICAL CONTENT NOTICE!

The solder used in the production of this product contains LEAD. In addition, other electrical/electronic and/or plastic (Where applicable) components may also contain traces of chemicals found by the California Health and Welfare Agency (and possibly other entities) to cause cancer and/or birth defects or other reproductive harm.

DO NOT PLACE SOLDER, ELECTRICAL/ELECTRONIC OR PLASTIC COMPONENTS IN YOUR MOUTH FOR ANY REASON WHAT SO EVER!

Avoid prolonged, unprotected contact between solder and your skin! When soldering, do not inhale solder fumes or expose eyes to solder/flux vapor!

If you come in contact with solder or components located inside the enclosure of this product, wash your hands before handling food.

WARNING: THIS APPARATUS MUST BE EARTHED

IMPORTANT

THE WIRES IN THIS MAINS LEAD ARE COLOURED IN ACCORDANCE WITH THE FOLLOWING CODE:

GREEN-AND-YELLOW :	EARTH
BLUE :	NEUTRAL
BROWN :	LIVE

As the colours of the wires in the mains lead of this apparatus may not correspond with the coloured markings identifying the terminals in your plug, proceed as follows:

The wire which is coloured GREEN and YELLOW must be connected to the terminal in the plug which is marked by the letter E or by the safety earth symbol ⏚ or coloured GREEN and YELLOW.

The wire which is coloured BLUE must be connected to the terminal which is marked with the letter N or coloured BLACK.

The wire which is coloured BROWN must be connected to the terminal which is marked with the letter L or coloured RED.

* This applies only to products distributed by YAMAHA KEMBLE MUSIC (U.K.) LTD.

■ WARNING

Components having special characteristics are marked ⚠ and must be replaced with parts having specification equal to those originally installed.



This mark urges servicemen to pay attention.

SPECIFICATIONS

● General specifications

Maximum output power	SPEAKERS: 500 W+500 W/4Ω @0.5% THD at 1 kHz 325 W+325 W/8Ω @0.5% THD at 1 kHz BRIDGE: 1000 W/8Ω @0.5% THD at 1 kHz	
Frequency response	20 Hz–20 kHz +1 dB, –3 dB @1 W output into 8Ω (SPEAKERS OUT)	
	20 Hz–20 kHz +1 dB, –3 dB @+4 dB output into 600Ω (ST OUT, ST SUB OUT, MONO OUT, AUX SEND, EFFECT SEND)	
Total harmonic distortion	Less than 0.5% @20 Hz–20 kHz, 250 W output into 4Ω (SPEAKERS OUT) Less than 0.3% @20 Hz–20 kHz, +14 dB output into 600Ω (ST OUT, ST SUB OUT, MONO OUT, AUX SEND, EFFECT SEND)	
Hum & noise (Average, Rs=150Ω) (with 20 Hz–20 kHz BPF)	–128 dB equivalent input noise, –65 dB residual output noise (SPEAKERS OUT)	
	–95 dB residual output noise (ST OUT, ST SUB OUT, AUX SEND)	
	–84 dB (ST OUT, MONO OUT)	ST master/MONO master fader at nominal level and all channel On switches off and all channel fader at minimum.
	–64 dB (68 dB S/N) (ST OUT, MONO OUT)	ST master fader at nominal level and one channel On switch on and one channel fader at nominal level and one channel Gain control at nominal level.
	–81 dB (AUX SEND)	Master fader at nominal level and all channel On switches off and all channel level control at minimum.
	–80 dB (EFFECT SEND)	All channel level control at minimum.
Maximum voltage gain	108 dB INPUT A/B to SPEAKERS OUT 84 dB INPUT A/B to ST OUT, MONO OUT 80 dB INPUT A/B to AUX SEND (PRE) 90 dB INPUT A/B to AUX SEND (POST) 78 dB INPUT A/B to EFFECT SEND 58 dB ST CH IN to ST OUT	
Crosstalk at 1 kHz	68 dB adjacent input, 68 dB input to output	
Input channel equalization	±15 dB Maximum HIGH 10 kHz shelving* MID 250 Hz–5 kHz peaking LOW 100 Hz shelving* * Turn over/roll off frequency of shelving: 3 dB below maximum variable level.	
ST Input channel equalization	±15 dB Maximum HIGH 10 kHz shelving* MID 2.5 kHz peaking LOW 100 Hz shelving* * Turn over/roll off frequency of shelving: 3 dB below maximum variable level.	
CH peak indicators	Red LED on each channel lits when POST EQ signal reaches the level –3 dB below clipping.	
CH signal indicators	Green LED on each channel lits when POST EQ signal reaches the level –10 dB.	
Meters	13 points LED meter	
Power amp select switch	500W + 500W, 300W + 300W, 100W + 100W	
Limiter	Comp. : THD≥0.5% (SPEAKERS OUT)	
LIMIT indicators	Turn on : THD≥0.5% (SPEAKERS OUT)	
Graphic equalizer	9 bands (63, 125, 250, 500, 1k, 2k, 4k, 8k, 16k Hz), ±12 dB Maximum	
Internal digital effect 1	16 programs, parameter control	
Internal digital effect 2	16 programs, parameter control, tap delay control, foot switch (DIGITAL EFFECT ON/OFF, TAP)	
Foot switch (FC5)	Digital effect 2 mute: on/off, Tap delay	
Protection circuit (Power amp)	POWER switch on/off mute, DC detection, TEMP (heatsink temp. ≥90°C)	
Fan circuit	stop — low speed (50°C) — variable — high speed (70°C)	
Phantom power	+48 V (balanced input)	
Option	FC5 (Foot switch), RK-124 (EMX5000-12)	
Power requirement/ Power consumption	USA and Canada: 120 V AC 60 Hz, 400 W Europe: 230 V AC 50 Hz, 550 W Other: 240 V AC 50 Hz, 550 W	
Dimensions (WxHxD)	682 × 158 × 538 mm (EMX5000-20) / 478 × 158 × 538 mm (EMX5000-12)	
Weight	19 kg (EMX5000-20) / 15 kg (EMX5000-12)	
Accessories	Power cord, Owner's Manual	

● Input specifications

Input terminals	Gain control	Actual load impedance	For use with nominal	Input level			Connectors on mixer
				Sensitivity[1]	Nominal	Max. before clip	
CH INPUT A (CH1–8/1–16)	–60	5 kΩ	50–600Ω Mics	–80 dB (0.078 mV)	–60 dB (0.775 mV)	–40 dB (7.75 mV)	XLR-3-31 type[2]
	–16			–36 dB (12.3 mV)	–16 dB (123 mV)	+4 dB (1.23 V)	
CH INPUT B (CH1–8/1–16)	–60	50 kΩ	600Ω Lines	–80 dB (0.078 mV)	–60 dB (0.775 mV)	–40 dB (7.75 mV)	PHONE JACK (TRS)[2]
	–16			–36 dB (12.3 mV)	–16 dB (123 mV)	+4 dB (1.23 V)	
ST INPUT (CH9–12/17–20)	–34	10 kΩ		–54 dB (1.55 mV)	–34 dB (15.5 mV)	–14 dB (155 mV)	PHONE JACK[3]
	+10			–10 dB (245 mV)	+10 dB (2.45 V)	+30 dB (24.5 V)	
ST SUB IN (1, 2)				–12 dB (195 mV)	+4 dB (1.23 V)	+20 dB (7.75 V)	
2TR IN (L, R)				–26 dBV (50.1 mV)	–10 dBV (316 mV)	+10 dBV (3.16 V)	PHONO JACK[3]
INSERT IN (CH1–8/1–16)				–20 dB (77.5 mV)	0 dB (0.775 V)	+20 dB (7.75 V)	PHONE JACK[3]
POWER AMP IN (A, B)				–12 dB (195 mV)	+4 dBV (1.23 V)	+18 dB (6.16 V)	PHONE JACK[3]

1. Sensitivity is the lowest level that can produce an output of +4 dB (1.23 V) or the nominal output level when the unit is set at maximum gain. (All fader and level controls are at maximum position.)
2. Balanced. (T=HOT, R=COLD, S=GND)
3. Unbalanced.

In these specifications when dB represents a specific voltage, 0 dB is referenced to 0.775 Vrms, 0 dBV is referenced to 1 Vrms.

● Output specifications

Output terminals	Actual source impedance	For use with nominal	Output level		Connectors on mixer
			Nominal	Max. before cliping	
ST OUT (L/R)	150Ω	600Ω Lines	+4 dB (1.23 V)	+20 dB (7.75 V)	PHONE JACK[1]
ST SUB OUT (L/R)					
MONO OUT					
AUX SEND 1, 2					
EFFECT SEND 1, 2					
REC OUT (L/R)	600Ω	10 kΩ Lines	–10 dBV (316 mV)	+10 dBV (3.16 V)	PHONO JACK[1]
INSERT OUT (CH1–8/1–16)			0 dB (775 mV)	+20 dB (7.75 V)	PHONE JACK[1]
PHONES (L/R)	100Ω	40Ω Lines	3 mW	75 mW	PHONE JACK (TRS)[2]
SPEAKERS 1 (A, B)	0.1Ω	4/8Ω Speakers	100 W/4Ω	500 W/4Ω	SPEAKON
SPEAKERS 2 (A, B)					PHONE JACK[1]

1. Unbalanced.
2. Impedance balaned. (T=HOT, R=COLD, S=GND)

• In these specifications when dB represents a specific voltage, 0 dB is referenced to 0.775 Vrms, 0 dBV is referenced 1 Vrms.

For European Model
Purchaser/User Information specified in EN55103-1 and EN55103-2.

Inrush Current: 70A
Conformed Environment: E1, E2, E3 and E4

■ PANEL LAYOUT

Control Panel

• Channel Control Section

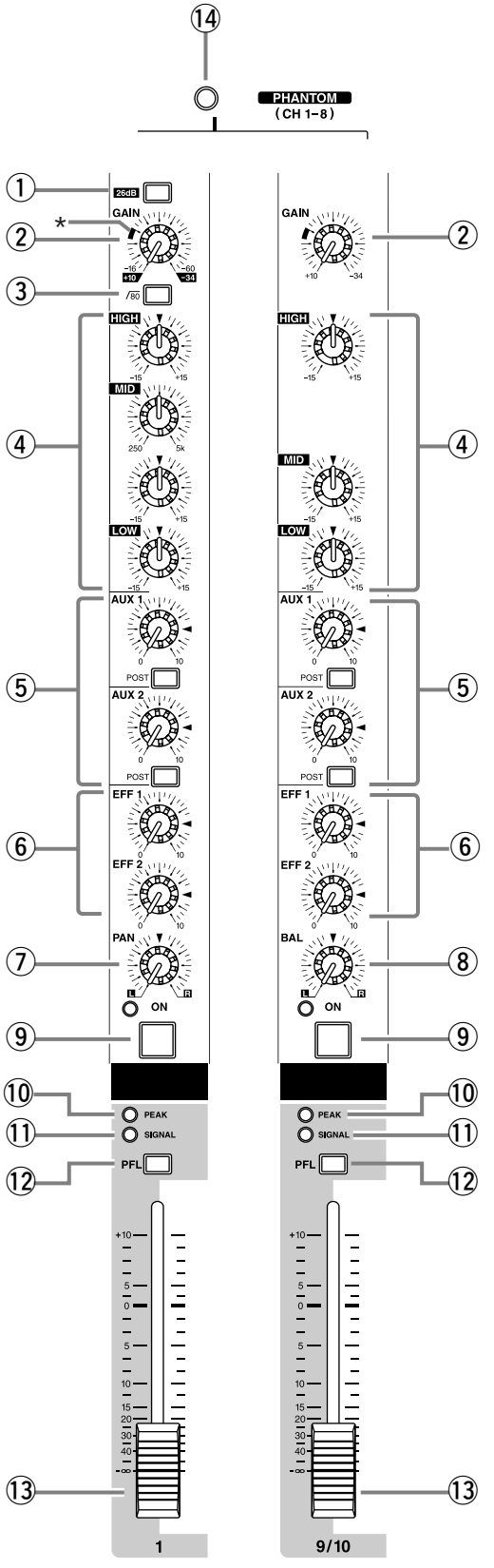

① 26 dB pad switch
② GAIN control
③ /80 (High pass filter) switch
④ Equalizer controls (HIGH, MID, LOW)
⑤ AUX1, AUX2 controls / POST switches
⑥ EFF 1, 2 controls (EFFECT)
⑦ PAN (panpot) control
(EMX5000-20: Cannels 1-16,
EMX5000-12: Cannels 1-8)
⑧ BAL (balance) control
(EMX5000-20: Cannels 17/18-19/20,
EMX5000-12: Cannels 9/10-11/12)
⑨ ON switch, indicator
⑩ PEAK indicator
⑪ SIGNAL indicator
⑫ PFL (pre-fader listen) switch
⑬ Channel fader
⑭ PHANTOM indicator

• Stereo Sub Input Section

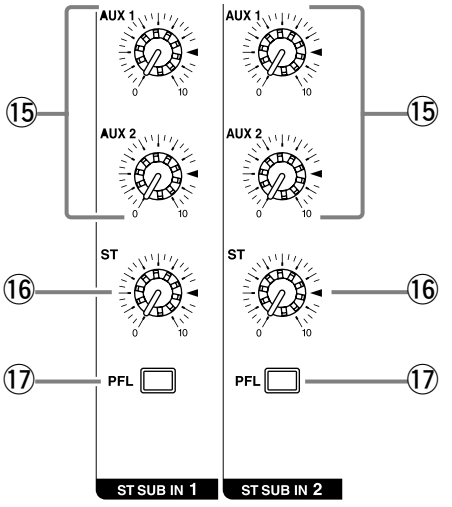

⑮ AUX 1, 2 controls
⑯ ST (stereo) control
⑰ PFL (pre-fader listen) switch

• Master Control Section

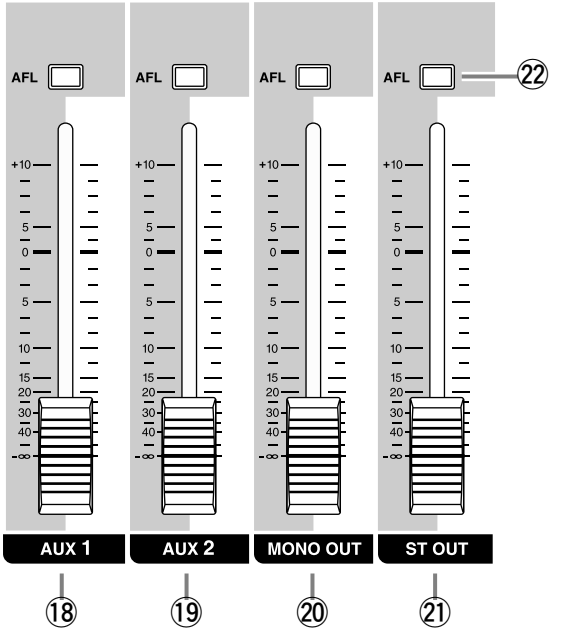

⑱ AUX 1 fader
⑲ AUX 2 fader
⑳ MONO OUT fader
㉑ ST OUT fader
㉒ AFL (after fader listen) switch

• 2TR IN Section

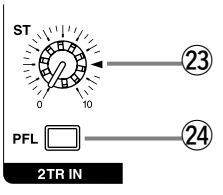

ST (stereo) control
PFL (pre-fader listen) switch

• Digital effect Section

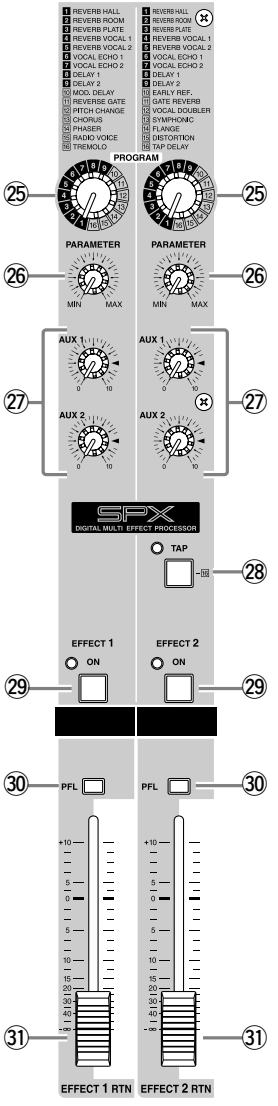

㉕ **PROGRAM selector**
㉖ **PARAMETER control**
㉗ **AUX 1/2 control**
㉘ **TAP switch, indicator**
㉙ **EFFECT 1/2 ON switch**
㉚ **PFL (Pre-fader listen) switch**
㉛ **EFFECT 1/2 RTN fader**

• Graphic equalizer Section

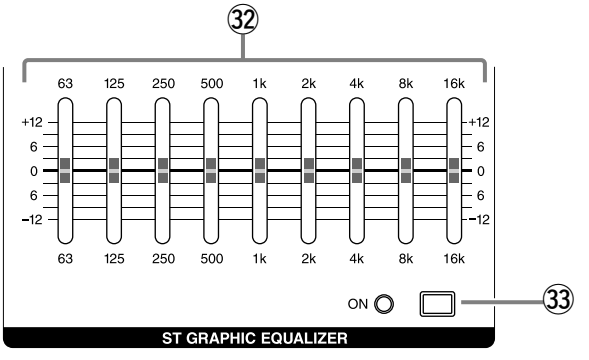

㉜ **Graphic equalizer**
㉝ **ON switch**

• Power amp Section

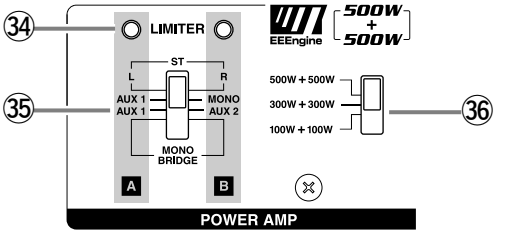

㉞ **LIMITER indicator**
㉟ **Power amp select switch**
㊱ **Maximum output select switch**

• **POWER indicator**

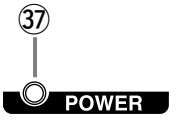

㊲ **POWER indicator**

• **YAMAHA SPEAKER PROCESSING**

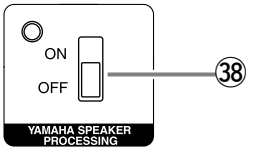

㊳ **ON/OFF switch**

• **STAND-BY**

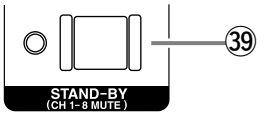

㊴ **ON/OFF switch**

• **Other indicators and controls**

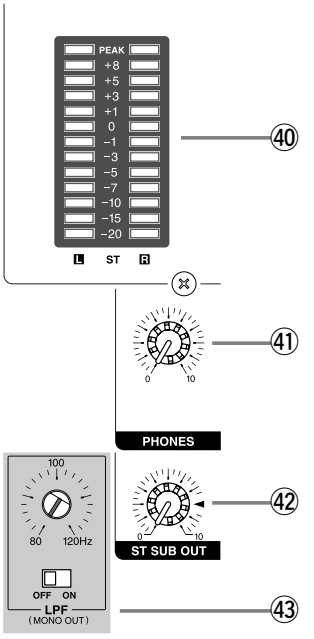

㊵ **Peak level indicator**
㊶ **PHONES control**
㊷ **ST SUB OUT control**
㊸ **LPF control, ON/OFF switch**

• **Input/Output pabel**

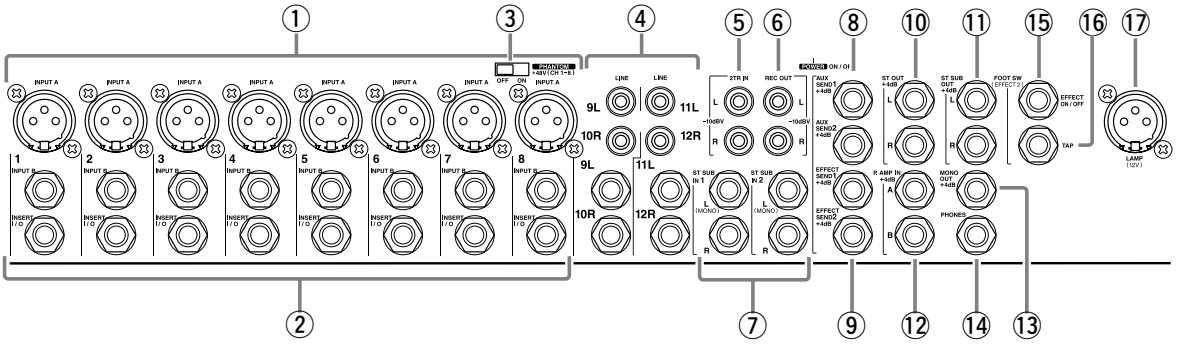

① **Channel input jacks (INPUT A, INPUT B)**
EMX5000-20: 1–16, EMX5000-12: 1–8
② **INSERT I/O (insert) jacks**
③ **PHANTOM switch**
④ **LINE (stereo) input jacks**
EMX5000-20: 17/18–19/20,
EMX5000-12: 9/10–11/12
⑤ **2TR IN jacks**
⑥ **REC OUT jacks**
⑦ **ST SUB IN 1 (stereo sub 1) jacks**
ST SUB IN 2 (stereo sub 2) jacks
⑧ **AUX SEND 1 jack, AUX SEND 2 jack**
⑨ **EFFECT SEND 1 jack, EFFECT SEND 2 jack**
⑩ **ST OUT jacks**
⑪ **ST SUB OUT jacks**
⑫ **P.AMP IN A, B (power amp input) jacks**
⑬ **MONO OUT jack**
⑭ **PHONES jack**
⑮ **FOOT SW EFFECT 2 ON/OFF jack**
⑯ **FOOT SW (EFFECT 2) TAP jack**
⑰ **LAMP jack**

• **Rear panel**

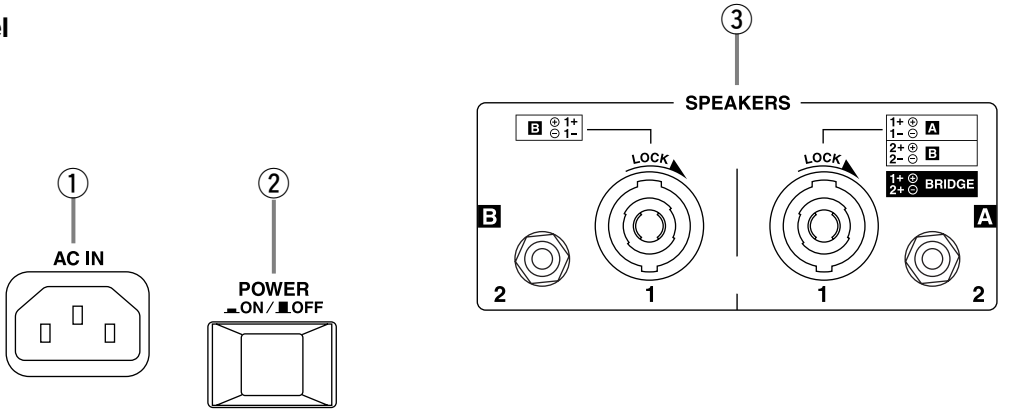

① AC inlet
② POWER switch
③ SPEAKERS (speaker output) jacks

CIRCUIT BOARD LAYOUT

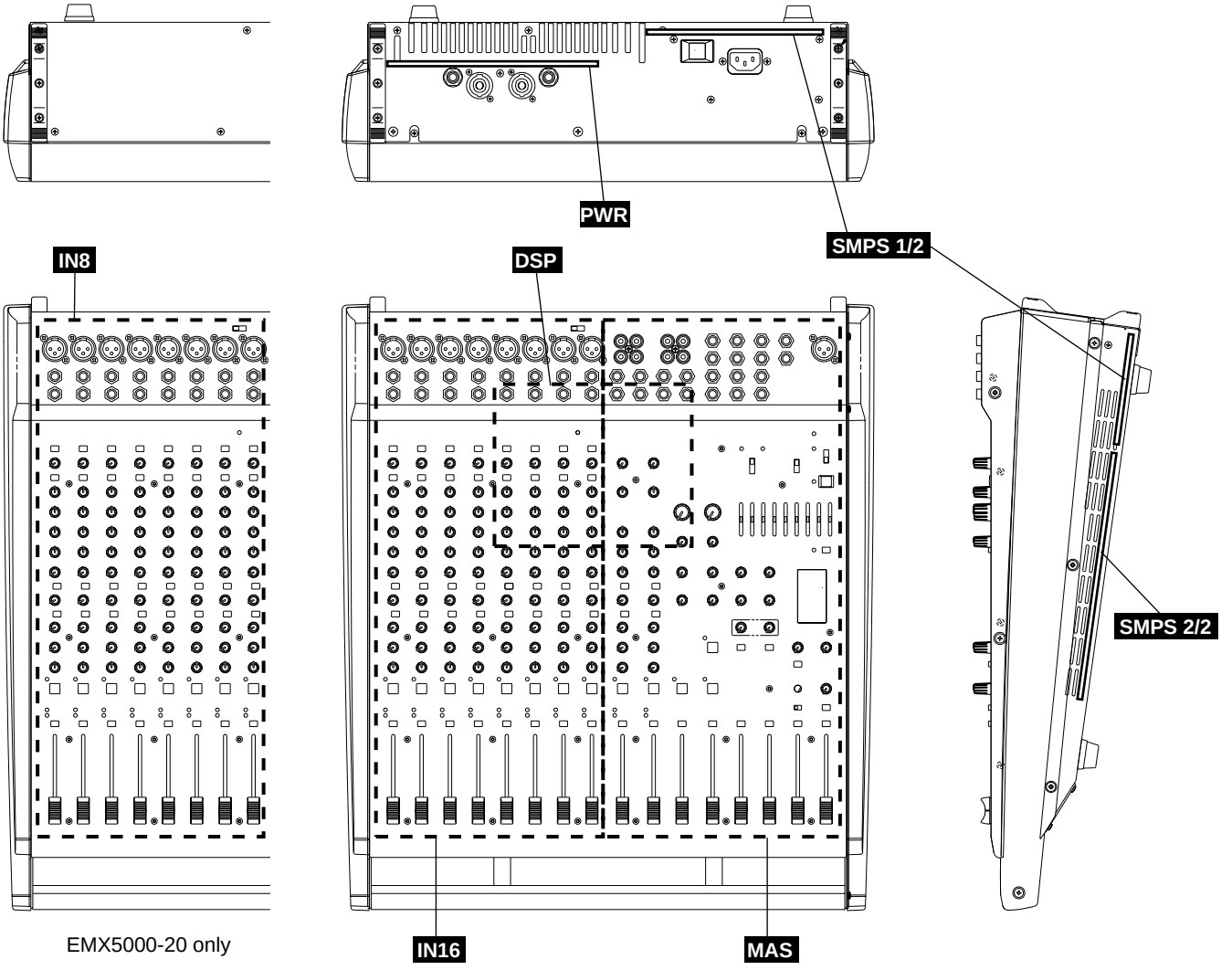

EMX5000-20 only

BLOCK & LEVEL DIAGRAM

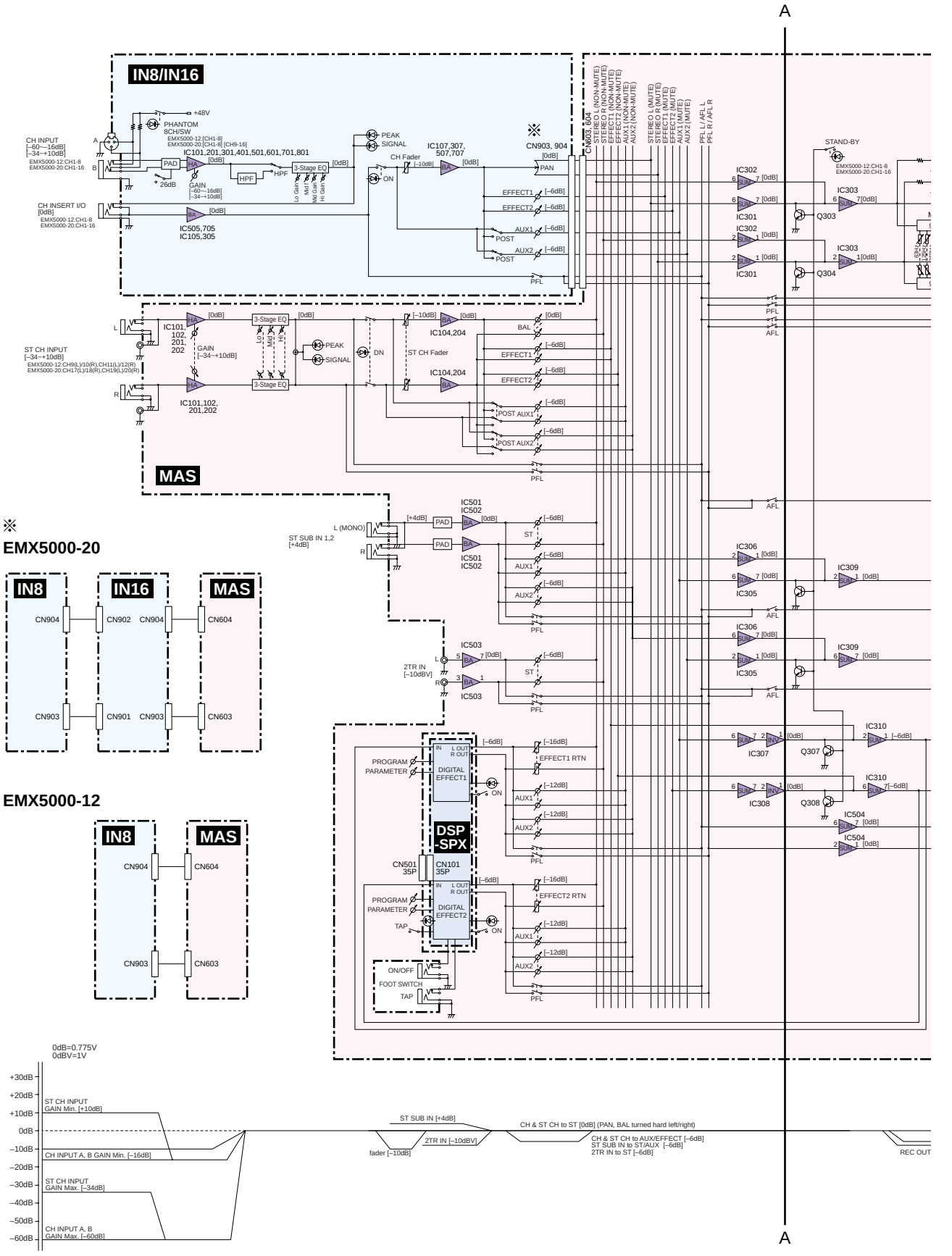

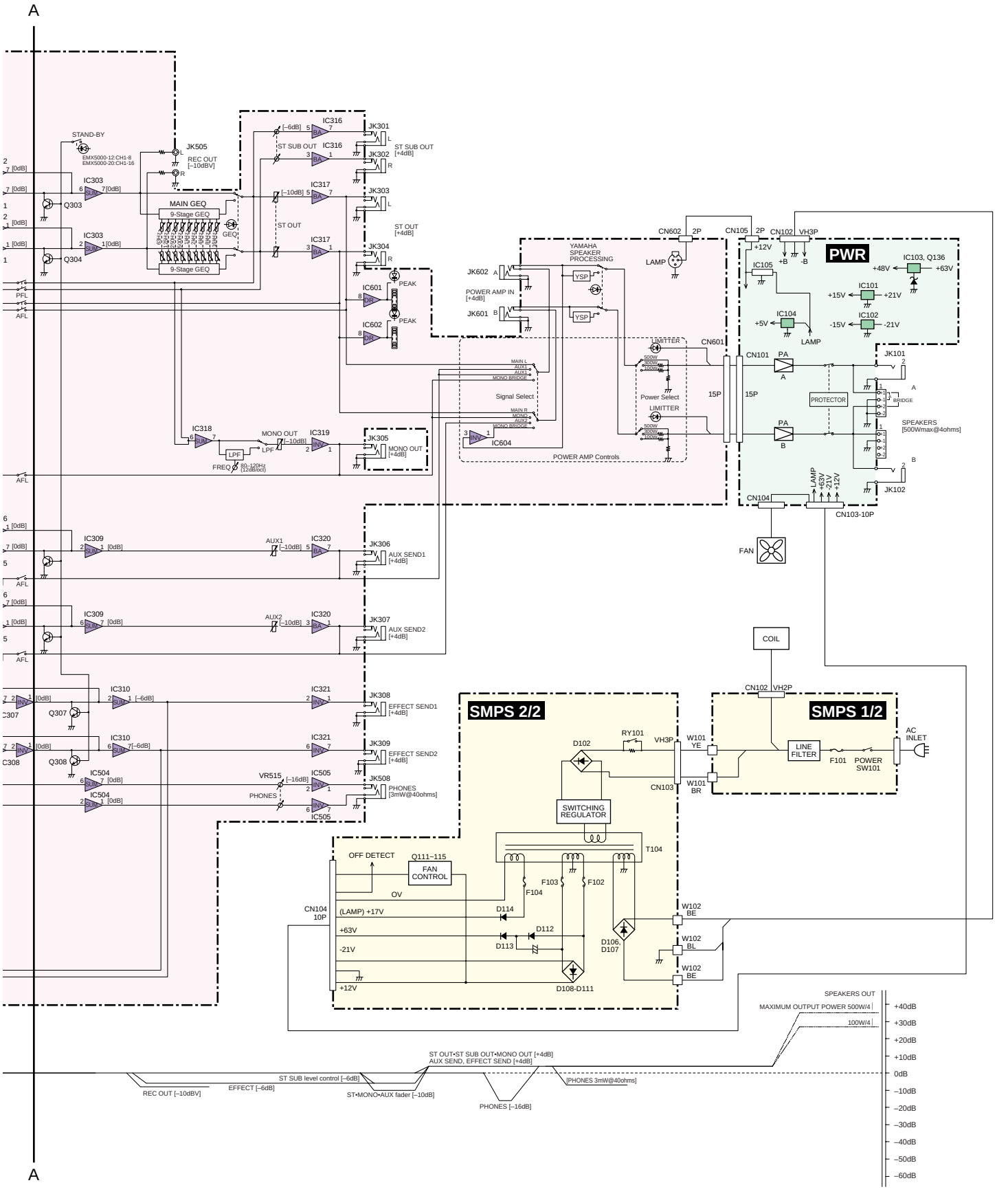
A
STAND-BY
EMX5000-12:CH1-8
EMX5000-20:CH1-16
JK505
REC OUT
[–10dBV]
MAIN GEQ
9-Stage GEQ
GEQ
ST OUT
IC316
IC317
IC303
Q303
Q304
JK301
JK302
JK303
JK304
ST SUB OUT
[+4dB]
ST OUT
[+4dB]
PEAK
IC601
IC602
PFL
AFL
JK602
JK601
POWER AMP IN
[+4dB]
YAMAHA
SPEAKER
PROCESSING
YSP
LAMP
CN602
2P
CN105
2P
CN102
VH3P
PWR
IC105
IC103, Q136
IC101
IC104
IC102
+12V
+48V
+63V
+15V
+21V
+5V
-15V
-21V
LAMP
CN601
15P
15P
CN101
PA
A
B
JK101
JK102
PROTECTOR
BRIDGE
SPEAKERS
[500Wmax@4ohms]
LIMITER
Power Select
Signal Select
MAIN L
AUX1
AUX2
MONO BRIDGE
MAIN R
IC604
POWER AMP Controls
IC318
IC319
MONO OUT
[–10dB]
LPF
FREQ
80–120Hz
(12dB/oct)
JK305
MONO OUT
[+4dB]
IC309
IC320
AUX1
[–10dB]
JK306
AUX SEND1
[+4dB]
AUX2
[–10dB]
JK307
AUX SEND2
[+4dB]
IC310
IC321
Q307
Q308
JK308
EFFECT SEND1
[+4dB]
JK309
EFFECT SEND2
[+4dB]
IC504
IC505
VR515
PHONES
JK508
PHONES
[3mW@40ohms]
CN104
10P
CN103-10P
FAN
COIL
CN102
VH2P
SMPS 2/2
SMPS 1/2
D102
RY101
VH3P
W101
YE
W101
BR
CN103
LINE
FILTER
F101
POWER
SW101
AC
INLET
SWITCHING
REGULATOR
T104
OFF DETECT
Q111–115
FAN
CONTROL
OV
(LAMP) +17V
+63V
-21V
+12V
F103
F102
F104
D114
D112
D113
D106,
D107
D108-D111
W102
BE
W102
BL
W102
BE
SPEAKERS OUT
MAXIMUM OUTPUT POWER 500W/4
100W/4
+40dB
+30dB
+20dB
+10dB
0dB
–10dB
–20dB
–30dB
–40dB
–50dB
–60dB
ST OUT•ST SUB OUT•MONO OUT [+4dB]
AUX SEND, EFFECT SEND [+4dB]
ST SUB level control [–6dB]
REC OUT [–10dBV]
EFFECT [–6dB]
ST•MONO•AUX fader [–10dB]
[PHONES 3mW@40ohms]
PHONES [–16dB]
A

WIRING

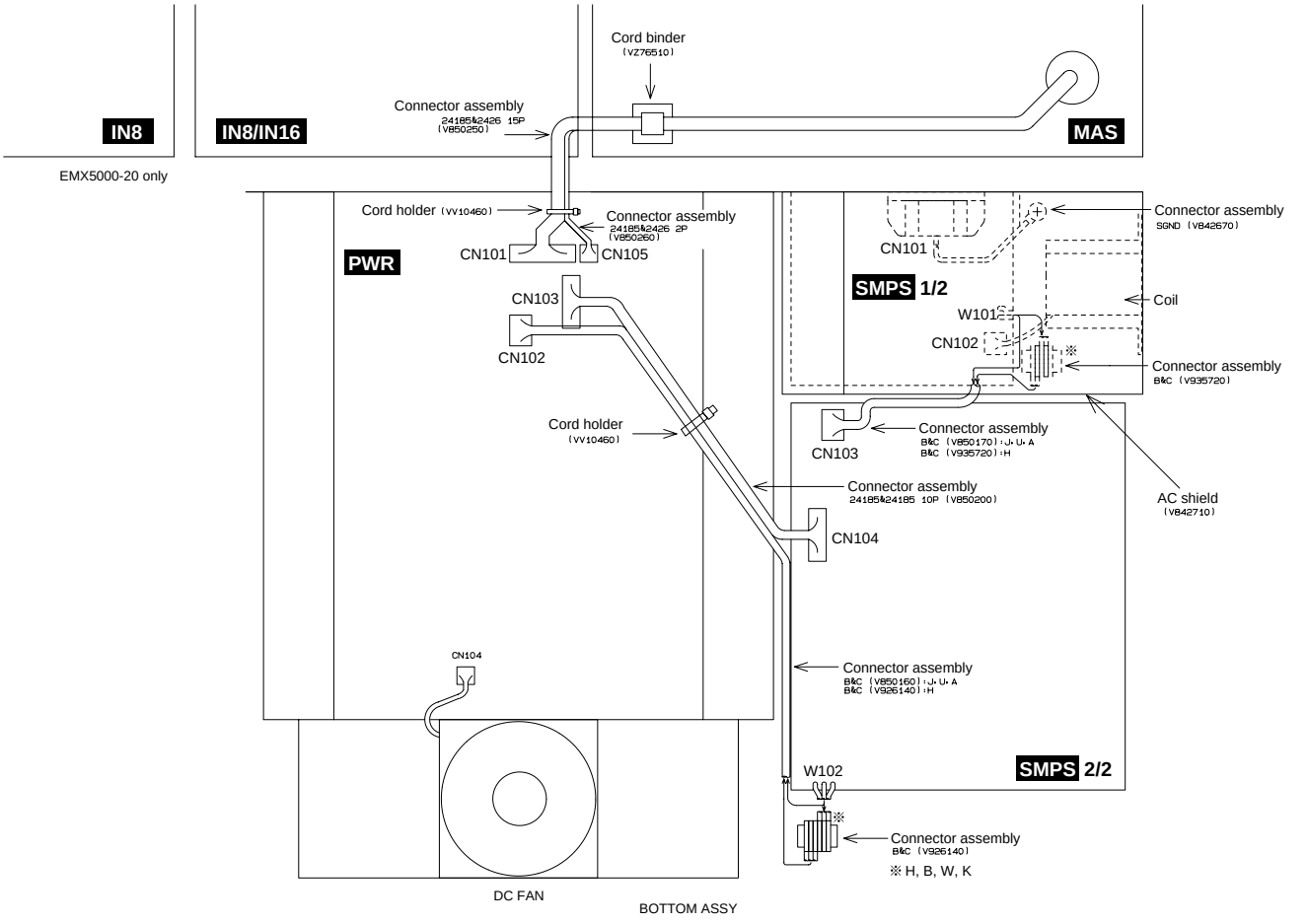

DIMENSIONS

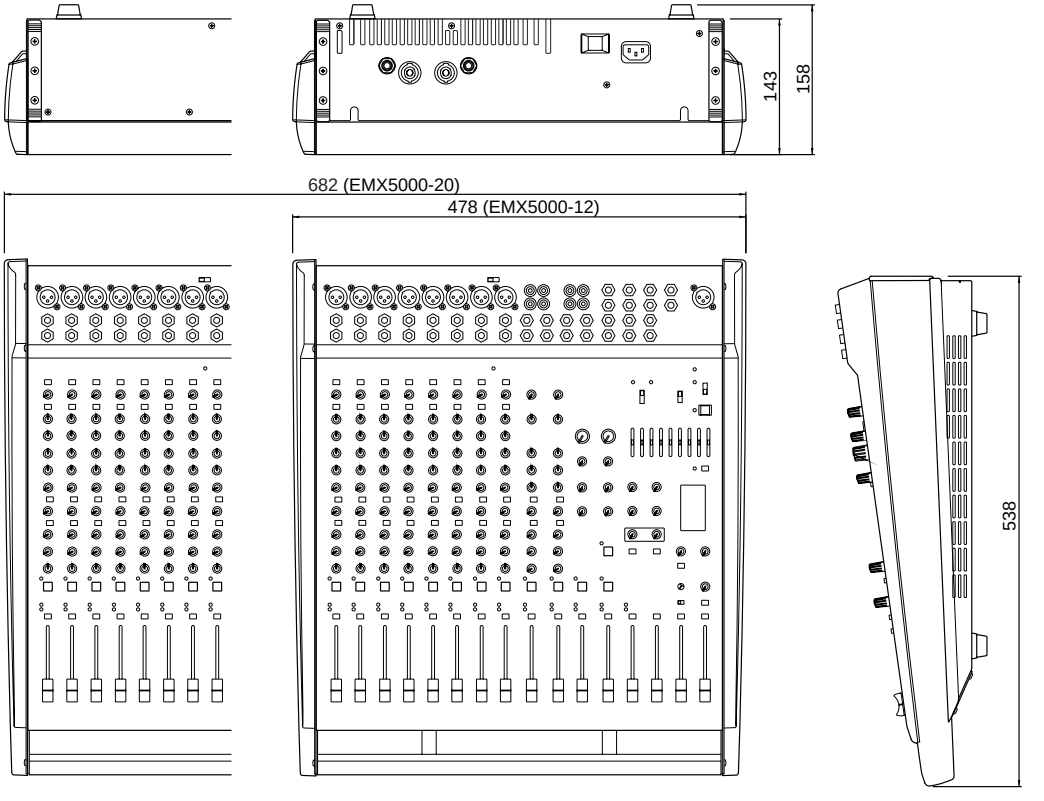

Units: mm

DISASSEMBLY PROCEDURE

1. Panel Assembly (Time required: about 5 minutes)

1-1. Remove the six (6) screws marked [30a] and six (6) screws marked [30b], and then remove the side pads R and L. (Fig. 1)

1-2. Remove the four (4) screws marked [160a], four (4) screws marked [160b], three (3) screws marked [170a] and four (4) screws marked [170b] (three (3) for EMX5000-12), Then lift the front end of the panel assembly, turn it about 45° and remove the panel assembly by releasing it from the claws on its side. (Fig. 1)

CAUTION This mark urges servicemen to pay attention.

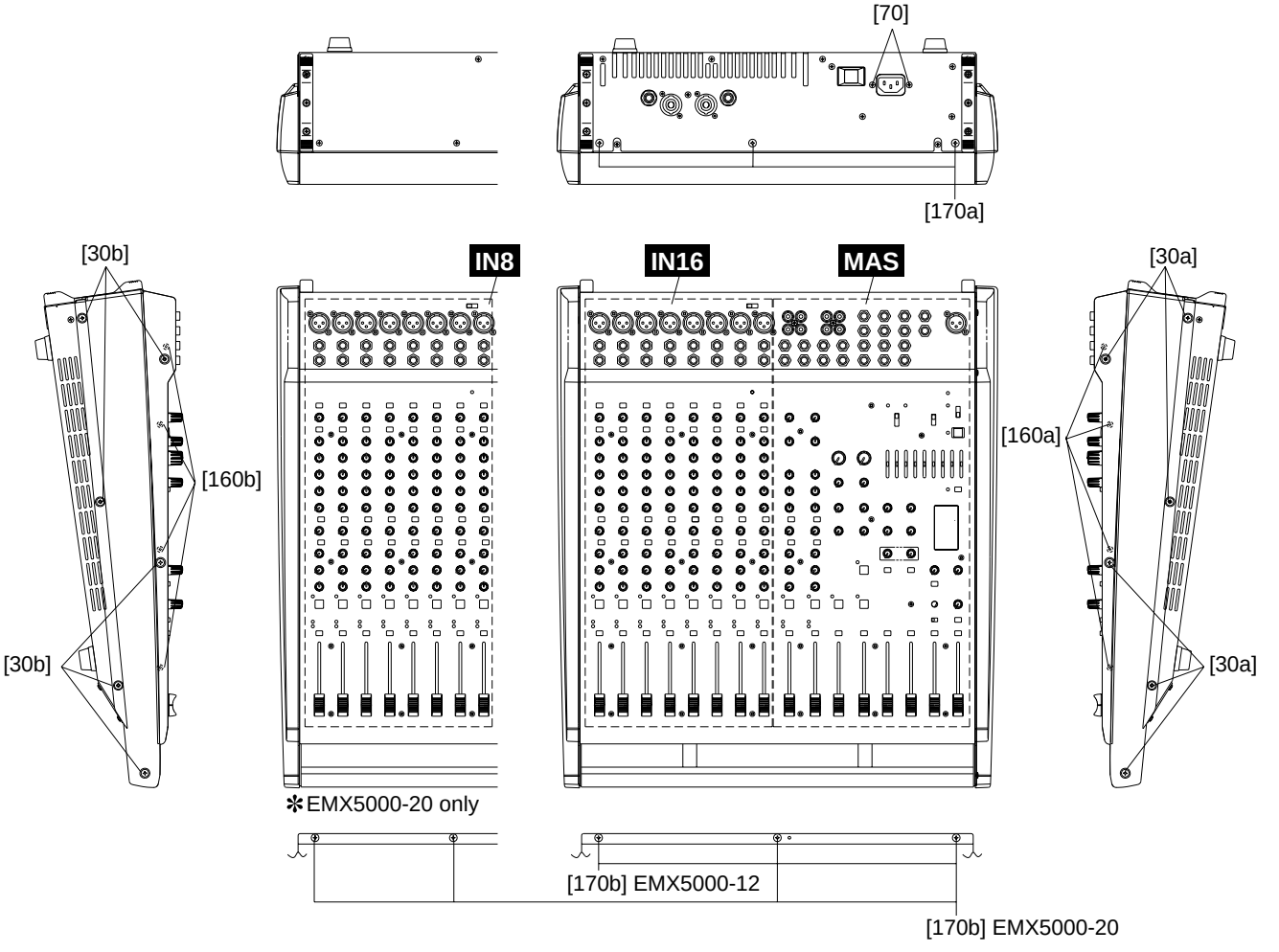

[30]: Bind Head Tapping Screw-B 4.0X8 MFZN2BL (EG340190)
[70]: Bind Head Tapping Screw-B 3.0X12 MFZN2BL (VQ074600)
[160]: Bind Head Tapping Screw-B 3.0X6 MFZN2BL (EP600230)
[170]: Bonding Tapping Screw-B 4.0X8 MFZN2BL (VR779900)

Fig.1

2. Coil (Time required: about 6 minutes)

2-1. Remove the panel assembly. (See Procedure 1.)

2-2. After removing the two (2) screws marked [B250], remove the harness and then the coil. (Fig. 2)

3. DC fan (Time required: about 7 minutes)

3-1. Remove the panel assembly. (See Procedure 1.)

3-2. Remove the two (2) screws marked [B120] and connector. The DC fan can then be removed. (Fig. 2)

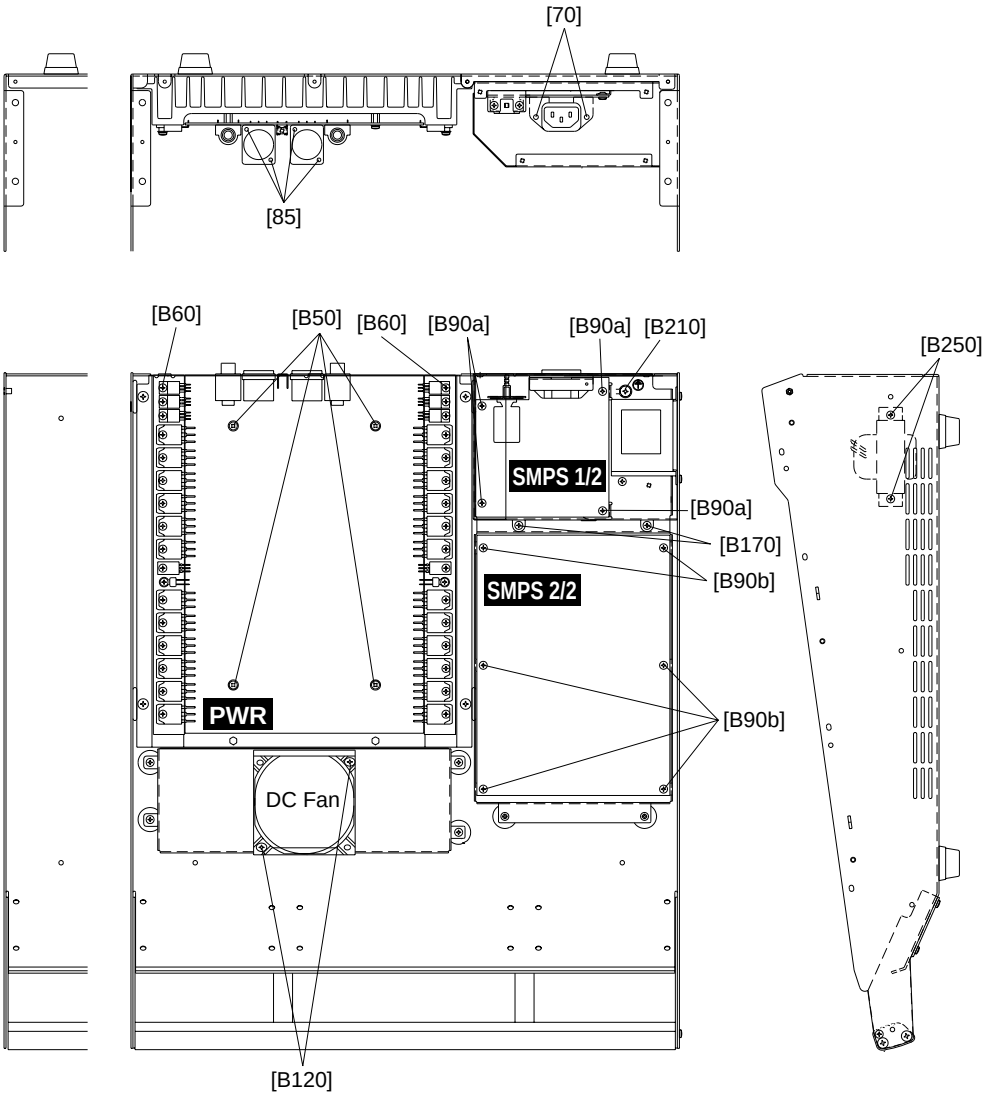

Fig.2

[B50]: Bind Head Screw SP 3.0X8 MFZN2Y (EG330290)
[B60]: Pan Head Screw SPK 3.0X12 MFZN2Y (VJ470900)
[70]: Bind Head Tapping Screw-B 3.0X12 MFZN2BL (VQ074600)
[B90]: Bind Head Tapping Screw-B 3.0X6 MFZN2BL (EP600230)
[B120]: Bind Head Tapping Screw-B 4.0X10 MFZN2BL (EP600240)
[B170]: Bind Head Tapping Screw-B 3.0X6 MFZN2BL (EP600230)
[B210]: Bind Head Screw A4.0X6 MFZN2BL (EG340290)
[B250]: Bind Head Tapping Screw-B 3.0X6 MFZN2BL (EP600230)

4. DSP Circuit Board
(Time required: about 12 minutes)

4-1. Remove the panel assembly. (See Procedure 1.)
4-2. Remove the four (4) DSP circuit board fixing screws marked [P220], disconnect the card wire connected to the connector. The DSP circuit board can then be removed. (Fig. 3)

5. MAS Circuit Board
(Time required: about 30 minutes)

5-1. Remove the panel assembly. (See Procedure 1.)
5-2. Remove the DSP circuit board. (See Procedure 4.)
5-3. Disconnect the two (2) harnesses connected to the connector assembly fixture marked [P240] on the main shield plate and remove the six (6) screws marked [B90]. The main shield plate can then be removed. (Fig. 3)
5-4. Remove the two (2) LAMP holder fixing screws marked [P70a], two (2) pin connector fixing screws marked [P70b], twenty-two (22) horn connector fixing hexagonal nuts, knobs (thirty-three (33) big ones, two (29 small ones and eight (8) fader knobs) and eleven (11) hexagon socket head screws marked [P60a] and three (3) hexagon socket head screws marked [P38a]. The MAS circuit board can then be removed. (Fig. 4)

6. IN8/IN16 Circuit Board: CH1-8 / EMX5000-12, CH9-18 / EMX5000-20 (Time required: about 40 minutes)

6-1. Remove the panel assembly. (See Procedure 1.)
6-2. Remove the DSP circuit board. (See Procedure 4.)
6-3. Remove the main shield plate. (See Procedure 5-3.)
6-4. Remove the sixteen (16) cannon connector fixing screws marked [P70c], sixteen (16) horn connector fixing hexagonal nuts, knobs (eighty (80) small ones and eight (8) fader knobs) and nine (9) hexagon socket head screws marked [P60b] and three (3) hexagon socket head screws marked [P38b]. The IN8/IN16 circuit board can then be removed. (Fig. 4)

7. IN8 Circuit Board: CH1-9 / EMX5000-20
(Time required: about 35 minutes)

7-1. Remove the panel assembly. (See Procedure 1.)
7-2. Remove the sixteen (16) cannon connector fixing screws marked [P70d], sixteen (16) horn connector fixing hexagonal nuts, knobs (eighty (80) small ones and eight (8) fader knobs) and nine (9) hexagon socket head screws marked [60c] and three (3) hexagon socket head screws marked [P38c]. The IN8 circuit board can then be removed. (Fig. 4)

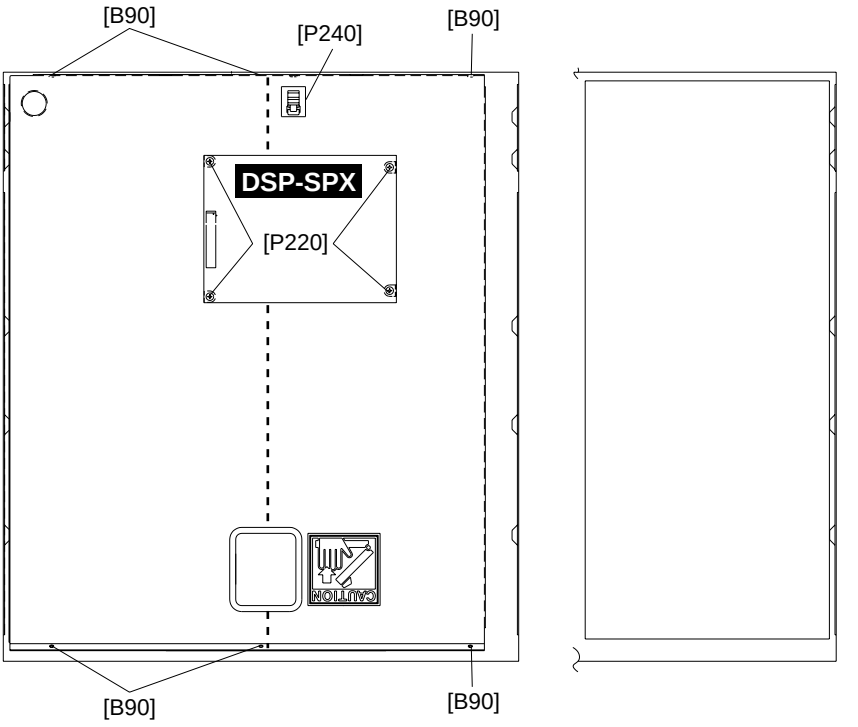

[B90]: Bind Head Tapping Screw-B 3.0X6 MFZN2BL (EP600230)

Fig.3

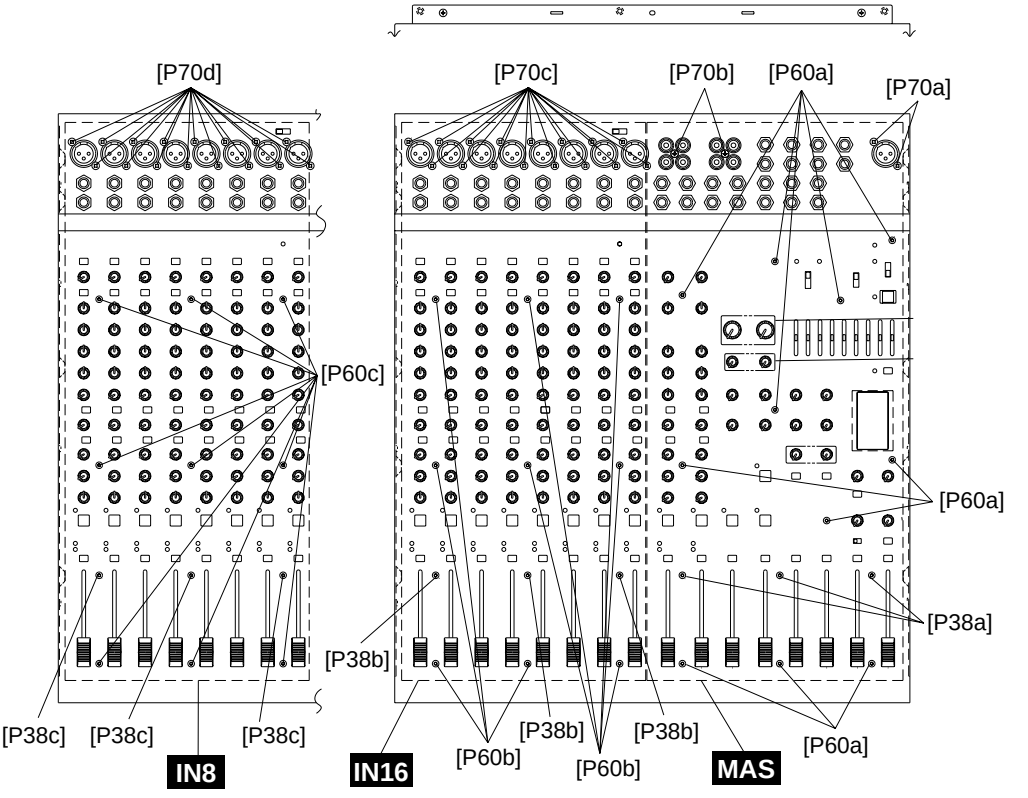

[P38]: Screw 3X6 MFZNBL (V9156000)
[P60]: Screw 3X25 MFZNBL (V3289800)
[P70]: Bonding Tapping Screw-B 3.0X8 MFZN2BL (VN413300)

Fig.4

8. PWR Circuit Board
(Time required: about 30 minutes)

8-1. Remove the panel assembly. (See Procedure 1.)

8-2. Remove the thirty-four (34) transistor fixing screws marked [B60], four (4) PWR circuit board fixing screws marked [B50] from the PWR assembly, four (4) screws marked [85] and two (2) hexagonal nuts from the rear panel. The PWR circuit board can then be removed. (Fig. 2)

9. SMPS 1/2 Circuit Board
(Time required: about 15 minutes)

9-1. Remove the panel assembly. (See Procedure 1.)

9-2. Remove the two (2) AC shield fixing screws marked [B170] and two (2) AC IN socket fixing screws marked [70] from the rear panel. The AC shield can then be removed.

9-3. Remove the four (4) SMPS 1/2 circuit board fixing screws marked [B90a] and one (1) ground cable fixing screw marked [B210]. (Fig. 2)

9-4. Remove the PSW knob from the rear panel and PSW escussion (using full care not to break the claw of the PSW escussion). The SMPS 1/2 circuit board can then be removed. (Fig. 2)

10. SMPS 2/2 Circuit Board
(Time required: about 7 minutes)

10-1. Remove the panel assembly. (See Procedure 1.)

10-2. Remove the six (6) SMPS 2/2 circuit board fixing screws marked [B90b], harness connected to the PWR circuit board and two (2) harnesses from the SMPS 1/2 circuit board. The SMPS 2/2 circuit board can then be removed. (Fig. 2)

LSI PIN DESCRIPTION

● **YSS910-S** (XV988A00) **DSP6** (Digital Signal Processor)

DSP-SPX: IC112

PIN NO.	NAME	I/O	FUNCTION	PIN NO.	NAME	I/O	FUNCTION
1	Vdd		Power supply (3.3 V)	89	Vss		Ground
2	Vss		Ground	90	DB13	I/O	
3	XI	I	System master clock input (60 MHz or 30 MHz)	91	DB14	I/O	
4	XO	O	System master clock output (High or 30 MHz)	92	DB15	I/O	
5	Vdd		Power supply (5 V)	93	DB16	I/O	
6	/SYNCI	I	Sync. signal input	94	DB17	I/O	
7	/SYNCO	O	Sync. signal output	95	DB18	I/O	Parallel data bus
8	Vdd		Power supply (5 V)	96	DB19	I/O	
9	CKI	I	System clock input (30 MHz)	97	DB20	I/O	
10	CKO	O	System clock output (30 MHz)	98	DB21	I/O	
11	CKSEL	I	System master clock select (0: 60 MHz, 1: 30 MHz)	99	DB22	I/O	
12	Vss		Ground	100	Vss		Ground
13	MCKS	I	Serial I/O master clock input (128 x Fs)	101	Vdd		Power supply (3.3 V)
14	/SSYNC	I	Serial I/O Sync. signal output	102	DB23	I/O	
15	/IC	I	Initial clear	103	DB24	I/O	
16	/TEST	I	Test mode setting (0: Test, 1: Normal)	104	DB25	I/O	
17	BTYP	I	Data bus type select (0: 8 bit, 1: 16 bit)	105	DB26	I/O	
18	/IRQ	O	IRQ output	106	DB27	I/O	Parallel data bus
19	TRIG	I/O	Trigger signal input/output	107	DB28	I/O	
20	Vdd		Power supply (5 V)	108	DB29	I/O	
21	Vss		Ground	109	DB30	I/O	
22	/CS	I	chip select signal input	110	DB31	I/O	
23	/WR	I	Write signal input	111	TIMO/DBOB	I/O	Timing signal output/ Parallel data bus output/ input
24	/RD	I	Read signal input	112	Vss		Ground
25	CA7	I/O		113	Vdd		Power supply (5 V)
26	CA6	I/O		114	DA00	I/O	
27	CA5	I/O		115	DA01	I/O	
28	CA4	I/O	Address bus of internal register	116	DA02	I/O	
29	CA3	I/O		117	DA03	I/O	
30	CA2	I/O		118	DA04	I/O	Memory data bus
31	CA1	I/O		119	DA05	I/O	
32	Vss		Ground	120	DA06	I/O	
33	Vdd		Power supply (3.3 V)	121	DA07	I/O	
34	CD15	I/O		122	Vss		Ground
35	CD14	I/O		123	DA08	I/O	
36	CD13	I/O		124	DA09	I/O	
37	CD12	I/O		125	DA10	I/O	
38	CD11	I/O		126	DA11	I/O	
39	CD10	I/O	Data bus of internal register	127	DA12	I/O	Memory data bus
40	CD09	I/O		128	DA13	I/O	
41	CD08	I/O		129	DA14	I/O	
42	CD07	I/O		130	DA15	I/O	
43	CD06	I/O		131	Vss		Ground
44	Vss		Ground	132	Vdd		Power supply (3.3 V)
45	Vdd		Power supply (3.3 V)	133	(n.c)		Not used
46	Vdd		Power supply (5 V)	134	Vdd		Power supply (5 V)
47	CD05	I/O		135	DA16	I/O	
48	CD04	I/O		136	DA17	I/O	
49	CD03	I/O		137	DA18	I/O	
50	CD02	I/O	Data bus of internal register	138	DA19	I/O	
51	CD01	I/O		139	DA20	I/O	Memory data bus
52	CD00	I/O		140	DA21	I/O	
53	/WAIT	O	WAIT output	141	DA22	I/O	
54	Vss		Ground	142	DA23	I/O	
55	SI0	I		143	Vss		Ground
56	SI1	I		144	DA24	I/O	
57	SI2	I		145	DA25	I/O	
58	SI3	I		146	DA26	I/O	
59	SI4	I	Serial data input	147	DA27	I/O	
60	SI5	I		148	DA28	I/O	Memory data bus
61	SI6	I		149	DA29	I/O	
62	SI7	I		150	DA30	I/O	
63	Vss		Ground	151	DA31	I/O	
64	Vdd		Power supply (5 V)	152	Vdd		Power supply (5 V)
65	SO0	O		153	Vss		Ground
66	SO1	O		154	A00	O	
67	SO2	O		155	A01	O	
68	SO3	O		156	A02	O	
69	SO4	O	Serial data output	157	A03	O	
70	SO5	O		158	A04	O	
71	SO6	O		159	A05	O	Memory address (SRAM, PSRAM, DRAM)
72	SO7	O		160	A06	O	
73	Vss		Ground	161	A07	O	
74	DB00	I/O		162	A08	O	
75	DB01	I/O		163	A09	O	
76	DB02	I/O		164	Vss		Ground
77	DB03	I/O		165	Vdd		Power supply (3.3 V)
78	DB04	I/O		166	A10	O	
79	DB05	I/O		167	A11	O	Memory address (SRAM, PSRAM, DRAM)
80	DB06	I/O	Parallel data bus	168	A12	O	
81	DB07	I/O		169	A13	O	Memory address (SRAM, PSRAM)
82	DB08	I/O		170	A14	O	
83	DB09	I/O		171	A15/RAS	O	Memory address (SRAM, PSRAM), /RAS (DRAM)
84	DB10	I/O		172	A16/CAS	O	Memory address (SRAM, PSRAM), /CAS (DRAM)
85	DB11	I/O		173	A17/CE	O	Memory address (SRAM), /CE (PSRAM)
86	DB12	I/O		174	/WE	O	Memory write enable signal
87	Vdd		Power supply (5 V)	175	/OE	O	Memory output enable signal
88	Vdd		Power supply (3.3 V)	176	Vdd		Power supply (5 V)

● **YM3436DK** (XG948E0) **DIR2** (Digital Format Interface Receiver)

DSP-SPX: IC103

PIN NO.	NAME	I/O	FUNCTION	PIN NO.	NAME	I/O	FUNCTION
1	DAUX	I	Auxiliary input for audio data	23	RSTN	I	System reset input
2	HDLT	O	Asynchronous buffer operation flag	24	Vdda		VCO section power (+5V)
3	DOUT	O	Audio data output	25	CTLN	I	VCO control input N
4	VFL	O	Parity flag output	26	PCO	O	PLL phase comparison output
5	OPT	O	Fs x 1 Synchronous output signal for DAC	27	(NC)		
6	SYNC	O	Fs x 1 Synchronous output signal for DSP	28	CTLP	I	VCO control input P
7	MCC	O	Fs x 64 Bit clock output	29	Vssa		VCO section power (GND)
8	WC	O	Fs x 1 Word clock output	30	TSTN	I	Test terminal. Open for normal use
9	MCB	O	Fs x 128 Bit clock output	31	KM2	I	Clock mode switching input 2
10	MCA	O	Fs x 256 Bit clock output	32	KM0	I	Clock mode switching input 0
11	SKSY	I	Clock synchronization control input	33	FS1	O	Channel status sampling frequency display output 1
12	XI	I	Crystal oscillator connection or external clock input	34	FS0	O	Channel status sampling frequency display output 0
13	XO	O	Crystal oscillator connection	35	CSM	I	Channel status output method selection
14	P256	O	VCO oscillating clock connection	36	EXTW	I	External synchronous auxiliary input word clock
15	LOCK	O	PLL lock flag	37	DDIN	I	EIAJ (AES/EBU) data input
16	Vss		Logic section power (GND)	38	LR	O	PLL word clock output
17	TC	O	PLL time constant switching output	39	Vdd		Logic section power (+5 V)
18	DIM1	I	Data input mode selection	40	ERR	O	Data error flag output
19	DIM0	I	Data input mode selection	41	EMP	O	Channel status emphasis control code output
20	DOM1	I	Data output mode selection	42	CD0	O	3-wire type microcomputer interface data output
21	DOM0	I	Data output mode selection	43	CCK	I	3-wire type microcomputer interface clock input
22	KM1	I	Clock mode switching input 1	44	CLD	I	3-wire type microcomputer interface load input

● **AK4522VF-E2** (XW008A00) **CODEC** (CMOS A/D & D/A Converter)

DSP-SPX: IC108, IC308

PIN NO.	NAME	I/O	FUNCTION	PIN NO.	NAME	I/O	FUNCTION
1	VREFH	I	Positive voltage reference input , VA Used as a positive voltage reference by ADC & DAC, VREFH is conne externally to filtered VA.	13	SDTO	O	Audio serial data output
				14	SMUTE	I	Soft mute When this pin goes "H", soft mute cycle is intiated. When returning "L", the output mute releases.
2	AINR+	I	Rch analog positive input				
3	AINR-	I	Rch analog negative input	15	DEM0	I	De-emphasis frequency select
4	AINL+	I	Lch analog positive input	16	DEM1	I	
5	AINL-	I	Lch analog negative input	17	MCKI	I	Master clock Input/X'tal input
6	VA	-	Analog power supply	18	VD	-	Digital power supply
7	AGND	-	Analog ground	19	DGND	-	Digital ground
8	DIF0	I	Audio data interface format	20	/PD	I	Reset
9	DIF1	I		21	CMODE	I	Master clock select (Internal biased pin) "H": 384fs, "L": 256fs, "NS": 512fs
10	LRCK	I	Input/Output channel clock				
11	SCLK	I	Audio serial data clock	22	AOUTL	O	Lch analog output
12	SDTI	I	Audio serial data input	23	AOUTR	O	Rch analog output
				24	VCOM	O	Common voltage output , VA/2

● **M30622MCA-XXXFP** (X2416A00) **CPU**

DSP-SPX: IC109

PIN NO.	NAME	I/O	FUNCTION	PIN NO.	NAME	I/O	FUNCTION
1	P96/	I/O	This is an 8-bits I/O port.	48	P46/$\overline{CS2}$	I/O/O	This is an 8-bits I/O port.
2	P95/	I/O		49	P45/$\overline{CS1}$	I/O/O	
3	P94/	I/O		50	P44/$\overline{CS0}$	I/O/O	
4	P93/	I/O		51	P43/A19	I/O/O	
5	P92/	I/O		52	P42/A18	I/O/O	
6	P91/	I/O		53	P41/A17	I/O/O	
7	P90/	I/O		54	P40/A16	I/O/O	
8	BYTE	I	External data bus width select input.	55	P37/A15	I/O/O	
9	CNVss	I	CNVss	56	P36/A14	I/O/O	
10	P87/XCIN	I/O	This is set using software to function as the I/O pins fpr a sub clock generation circuit.	57	P35/A13	I/O/O	
				58	P34/A12	I/O/O	
11	P86/XCOUT	I/O	This is set using software to function as the I/O pins fpr a sub clock generation circuit.	59	P33/A11	I/O/O	
				60	P32/A10	I/O/O	
12	$\overline{RESET}$	I	A "L" on this input resets the microcomputer.	61	P31/A9	I/O/O	
13	XOUT	O	Clock output	62	Vcc		Power supply 2.7V to 5.5V.
14	Vss		Power supply 0V.	63	P30/A8(/-/D7)	I/O/O	This is an 8-bits I/O port.
15	XIN	I	Clock input	64	Vss		Power supply 0V.
16	Vcc		Power supply 2.7V to 5.5V.	65	P27/A7(/D7/D6)	I/O/O	This is an 8-bits I/O port.
17	P85/$\overline{NMI}$	I	This is an input-only port that also functions for $\overline{NMI}$.	66	P26/A6(/D6/D5)	I/O/O	
18	P84/$\overline{INT2}$	I/O	This is an 8-bits I/O port.	67	P25/A5(/D5/D4)	I/O/O	
19	P83/$\overline{INT1}$	I/O		68	P24/A4(/D4/D3)	I/O/O	
20	P82/$\overline{INT0}$	I/O		69	P23/A3(/D3/D2)	I/O/O	
21	P81/TA4IN/$\overline{U}$	I/O		70	P22/A2(/D2/D1)	I/O/O	
22	P80/TA4IN/U	I/O		71	P21/A1(/D1/D0)	I/O/O	
23	P77/TA3IN	I/O		72	P20/A0(/D0/-)	I/O/O	
24	P76/TA3OUT	I/O		73	P17/D15	I/O	
25	P75/TA2IN/$\overline{W}$	I/O		74	P16/D14	I/O	
26	P74/TA2OUT/W	I/O		75	P15/D13	I/O	
27	P73/TA1IN/$\overline{V}$	I/O		76	P14/D12	I/O	
28	P72/CLK2/TA1OUT	I/O		77	P13/D11	I/O	
29	P71/RxD2	I/O	This is an 8-bits I/O port. This is N channel open-drain output.	78	P12/D10	I/O	
				79	P11/D9	I/O	
30	P70/TxD2	I/O	This is an 8-bits I/O port. This is N channel open-drain output.	80	P10/D8	I/O	
				81	P07/D7	I/O	This is an 8-bits CMOS I/O port.
31	P67/TxD1	I/O	This is an 8-bits I/O port.	82	P06/D6	I/O	
32	P66/RxD1	I/O		83	P05/D5	I/O	
33	P65/CLK1	I/O		84	P04/D4	I/O	
34	P64/RTS1	I/O		85	P03/D3	I/O	
35	P63/TxD0	I/O		86	P02/D2	I/O	
36	P62/RxD0	I/O		87	P01/D1	I/O	
37	P61/CLK0	I/O		88	P00/D0	I/O	
38	P60/$\overline{CTS0}$/$\overline{RTS0}$	I/O		89	P107/AN7/$\overline{KI3}$	I/O	This is an 8-bits I/O port.
39	P57/$\overline{RDY}$/CLKOUT	I	While the input level at the $\overline{RDY}$ pin is "L", the microcomputer is in the ready state.	90	P106/AN6/$\overline{KI2}$	I/O	
				91	P105/AN5/$\overline{KI1}$	I/O	
40	P56/ALE	O	ALE output signal	92	P104/AN4/$\overline{KI0}$	I/O	
41	P55/$\overline{HOLD}$	I	While the input level at the $\overline{HOLD}$ pin is "L", the microcomputer is placed in the hold state.	93	P103/AN3	I/O	
				94	P102/AN2	I/O	
42	P54/$\overline{HLDA}$	O	$\overline{HLDA}$ output signal	95	P101/AN1	I/O	
43	P53/BCLK	O	BCLK output signal	96	Avss		Analog power supply input
44	P52/$\overline{RD}$	O	$\overline{RD}$ output signal	97	P100/AN0	I/O	This is an 8-bits I/O port.
45	P51/$\overline{WRH}$/$\overline{BHE}$	O	$\overline{WRH}$ and $\overline{BHE}$ output signals	98	VREF	I	Reference voltage input
46	P50/$\overline{WRL}$/$\overline{WR}$	O	$\overline{WRL}$ and $\overline{WR}$ output signals	99	Avcc		Analog power supply input
47	P47/$\overline{CS3}$	I/O/O	This is an 8-bits I/O port.	100	P97/TRG	I/O	This is an 8-bits I/O port.

IC BLOCK DIAGRAM

● **LB1412M** (XT547A00)
LED DRIVER
MAS: IC601, IC602

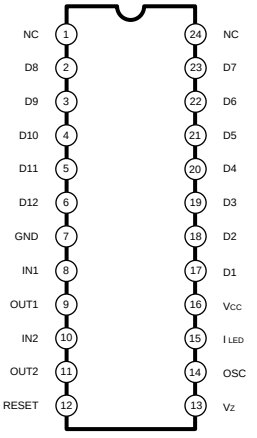

● **74HCU04DT** (XZ110A00)
INVERTER
DSP-SPX: IC104

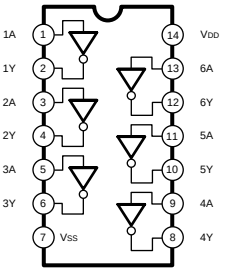

● **74HC08DT**(XZ108A00)
AND
DSP-SPX: IC111

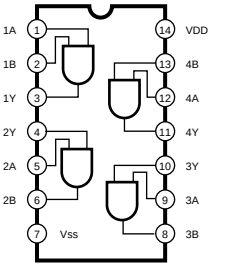

● **NJM2060(TE2)** (XM560A00)
OP AMP
MAS: IC311-315

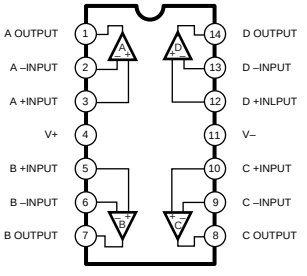

● **NJM2068MD-T1** (XJ553A00)
OP AMP
IN8: IC101-105,IC107, IC201, IC301-305,
IC307, IC401, IC501-505, IC507,
IC601, IC701-705, IC707, IC801
DSP-SPX: IC105-107, IC305-307
MAS: IC101-104, IC201-204, IC301-310,
IC318, IC501-504, IC603, IC701, IC702
20ch only
IN16: IC101-105, IC107, IC201, IC301-305,
IC307, IC401, IC501-505, IC507,
IC601, IC701-705, IC707, IC801

● **NJM4556AL**(XP844A00)
OP AMP
MAS: IC505

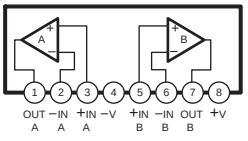

● **NJM4580ED** (XT157A00)
OP AMP
MAS: IC316, IC317, IC319-321

● **NJM4588M(T1)** (IG103520)
OP AMP
IN8: IC106, IC306, IC506, IC706
MAS: IC105, IC605, IC606
20ch only
IN16: IC106, IC306, IC506, IC706

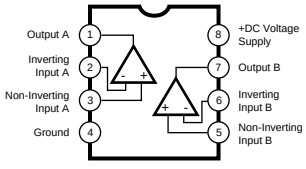

● **IR2153** (X2264A00)
CONTROL IC
SMPS1/2,2/2: IC102

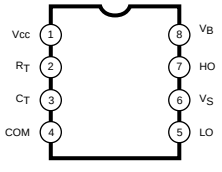

■ CIRCUIT BOARDS

• IN8/IN16 Circuit Board

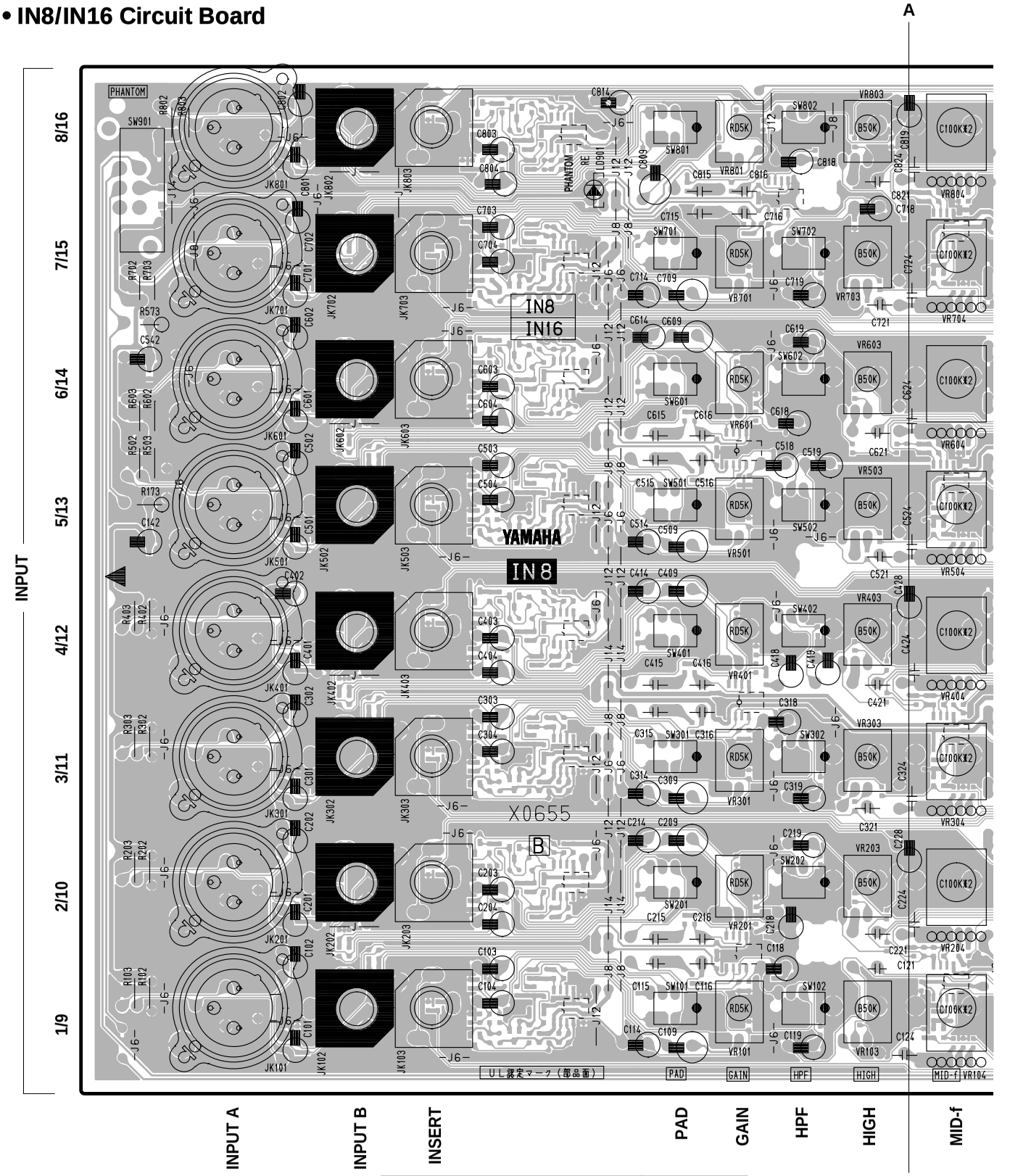

Location No. \ Model	IN16	IN8
CN901	install	not install
CN902	install	not install
CN903	install	install
CN904	install	install

IN8/IN16: 3NA-V826740

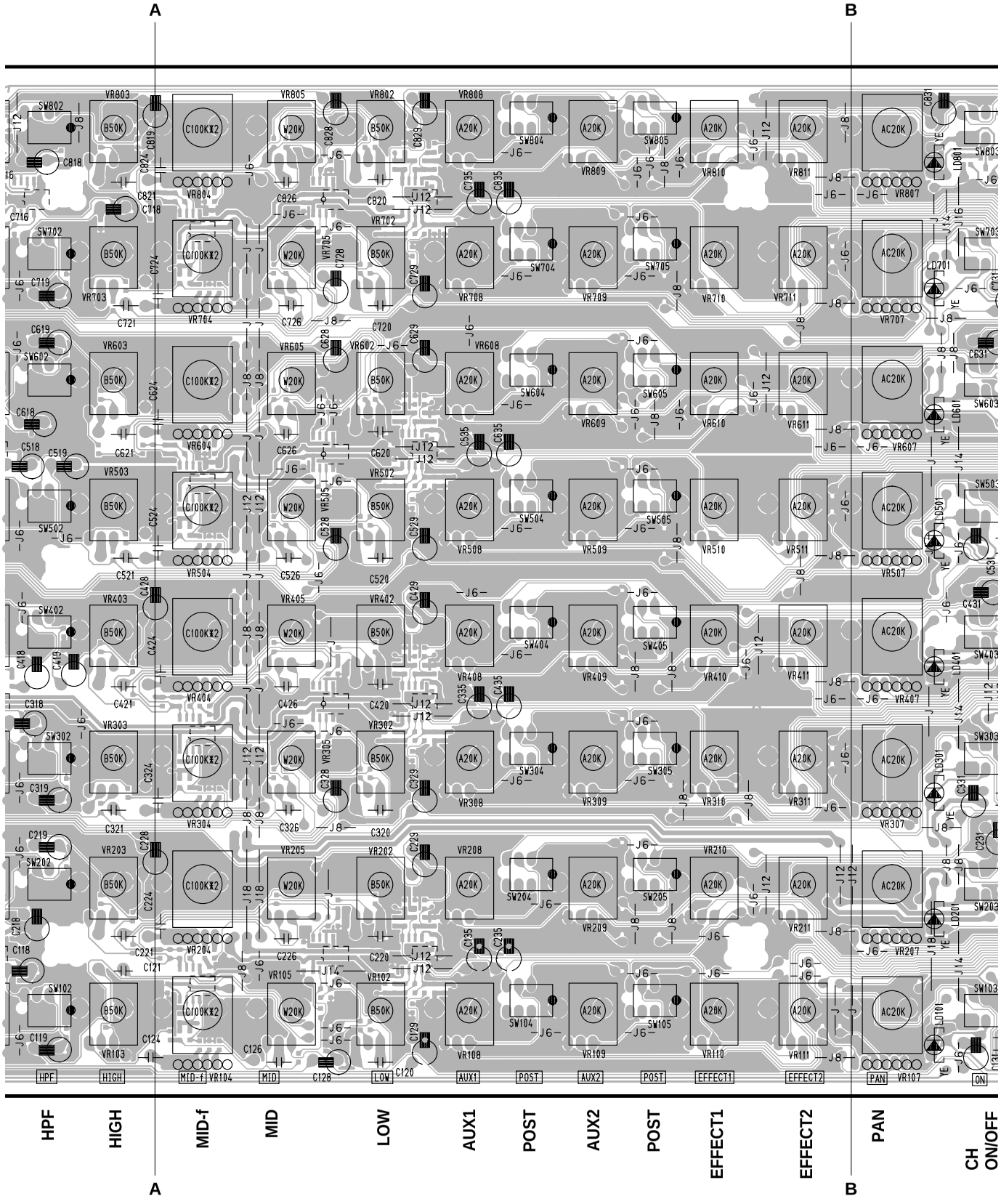
A
B
HPF
HIGH
MID-f
MID
LOW
AUX1
POST
AUX2
POST
EFFECT1
EFFECT2
PAN
CH ON/OFF
A
B

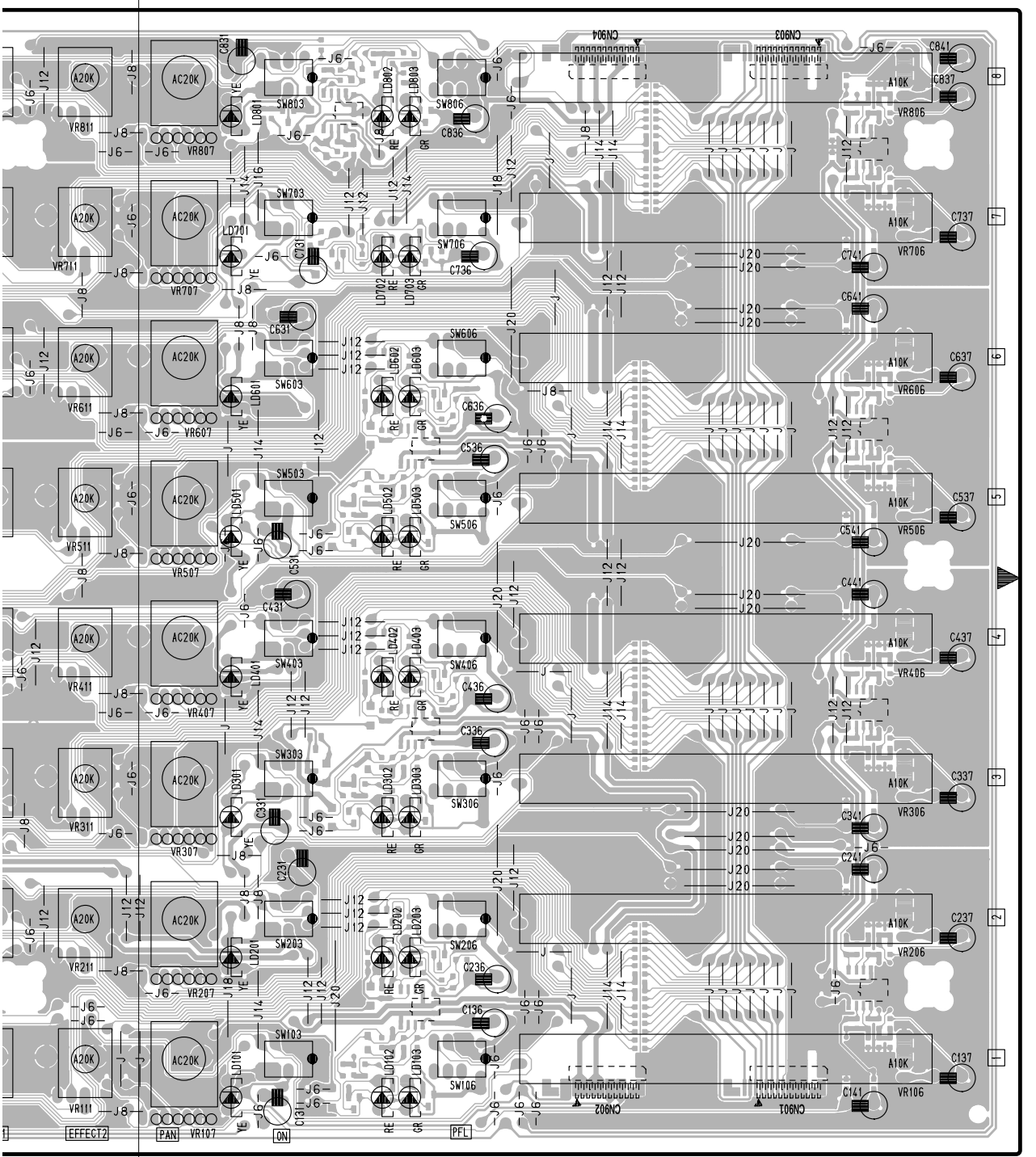

Component side

IN8/IN16: 3NA-V826740

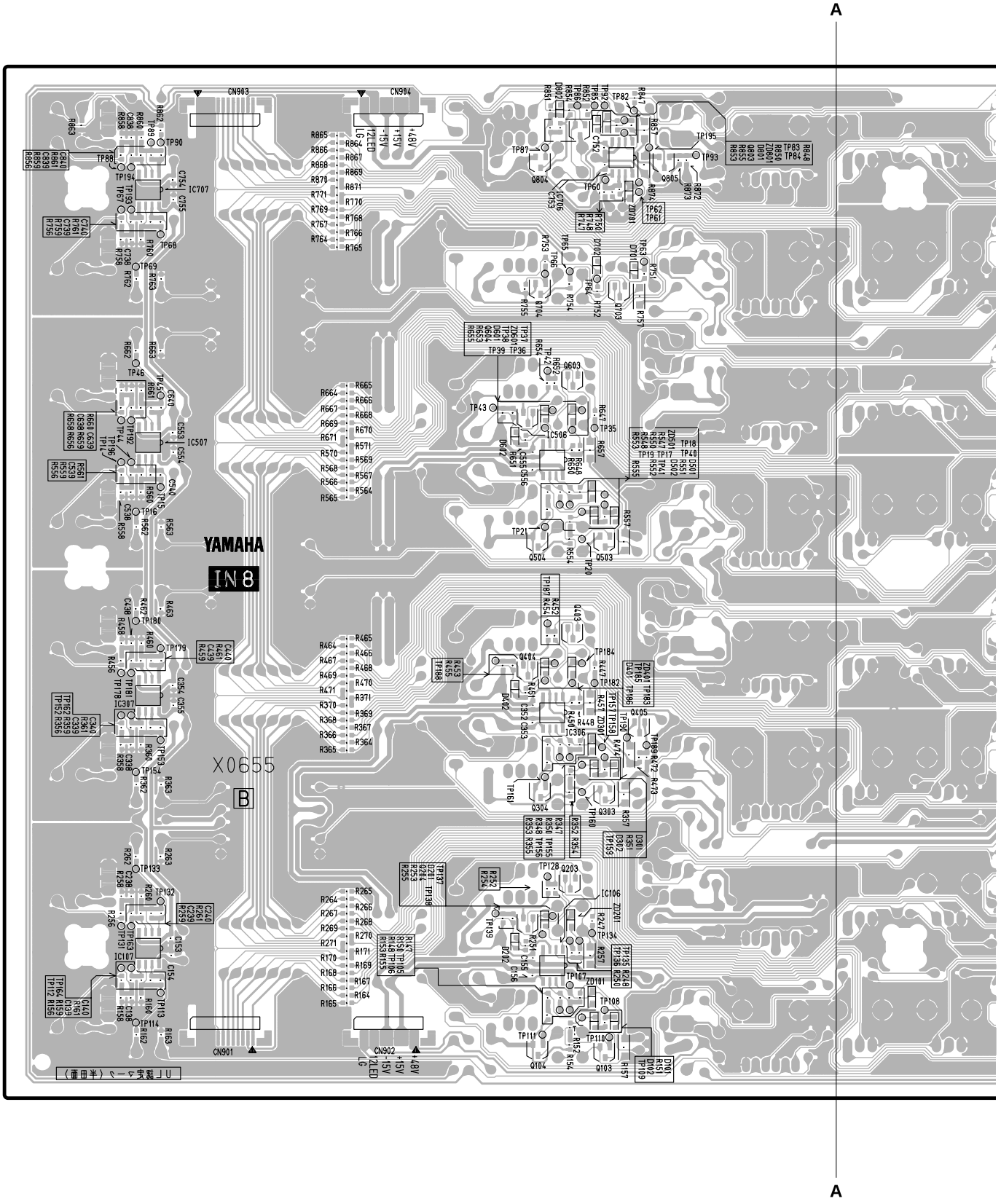
A
A
YAMAHA
IN8
X0655
B
CN901
CN902
CN903
CN904

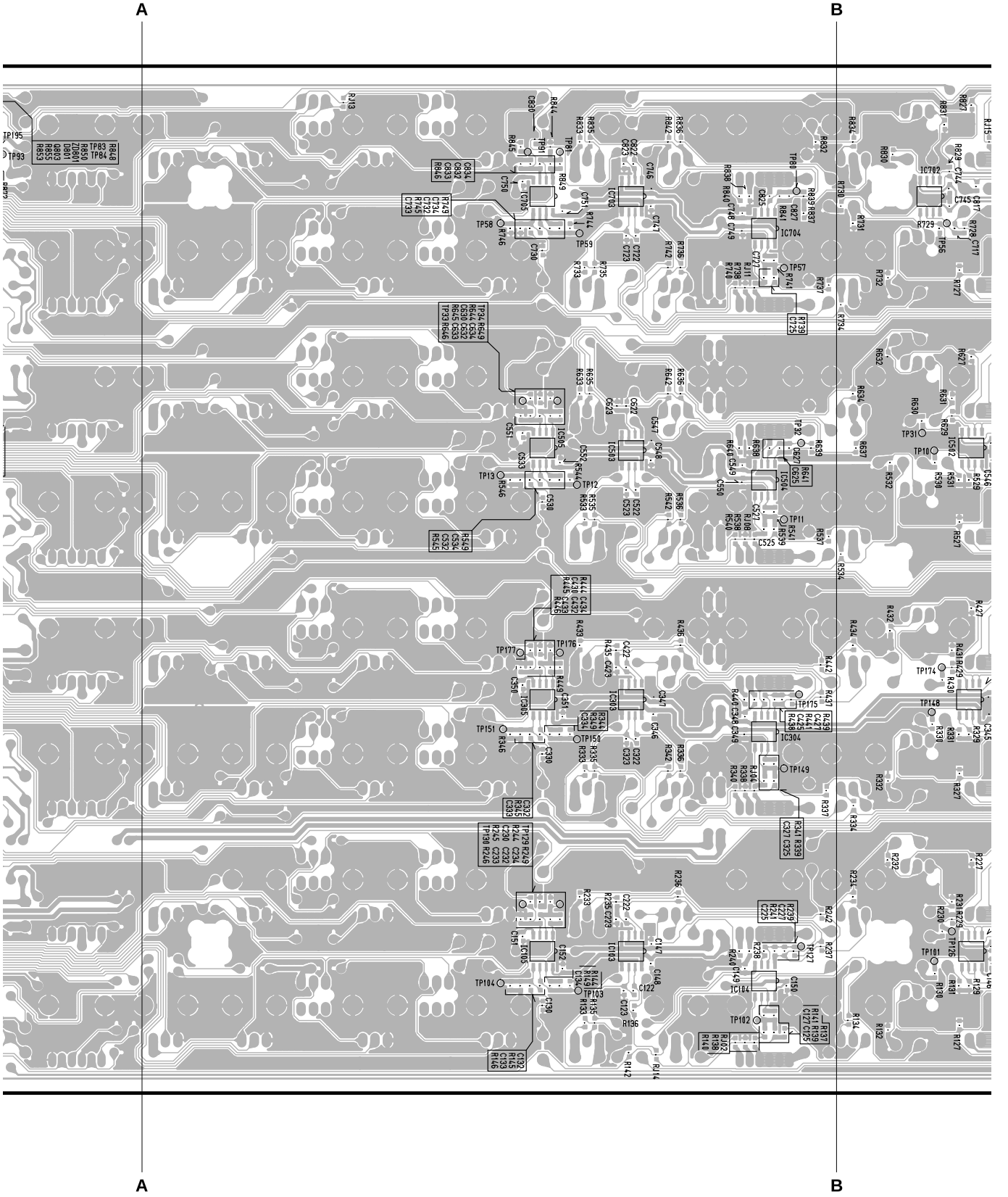
A
B
A
B

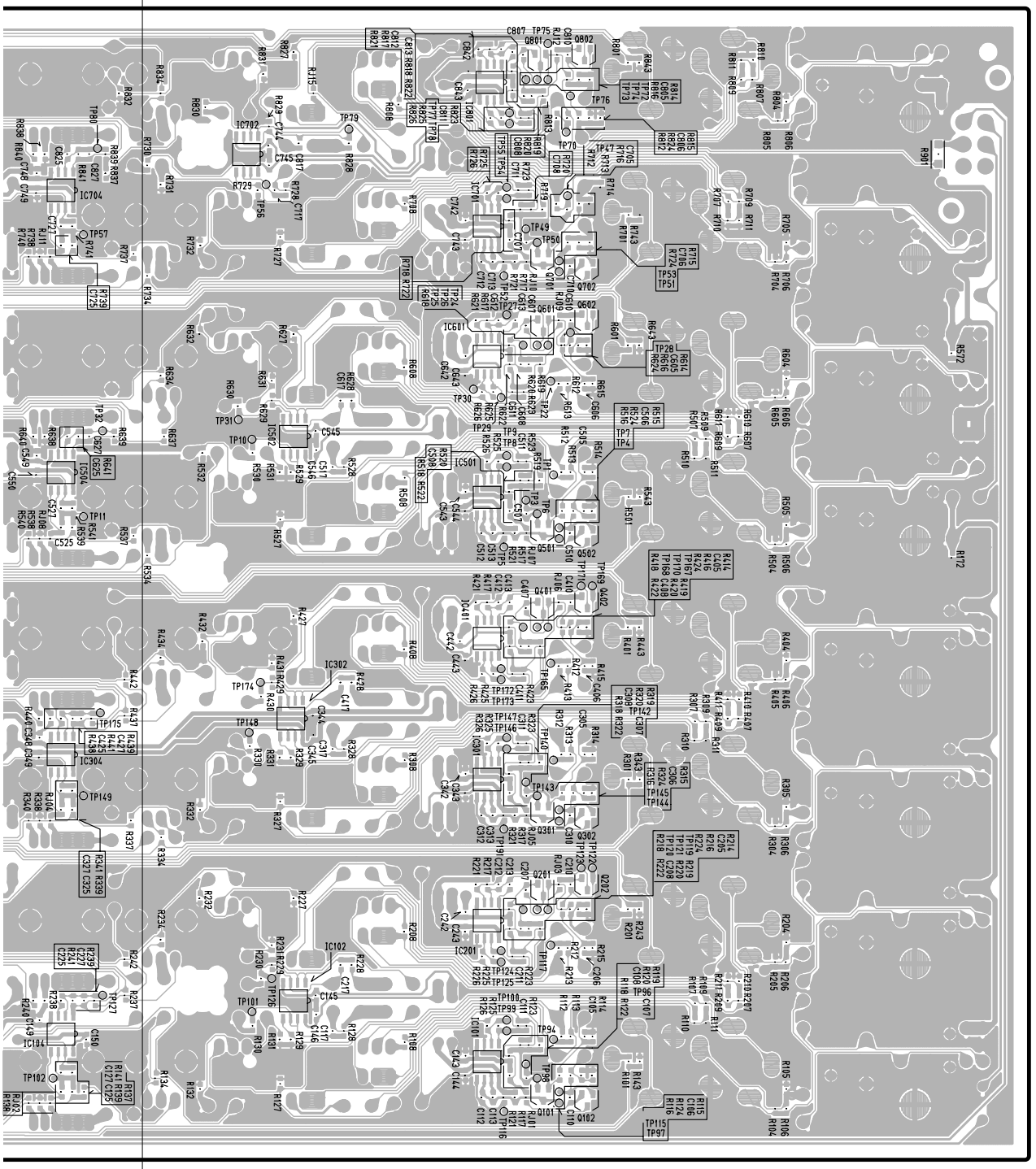

Pattern side

• MAS Circuit Board

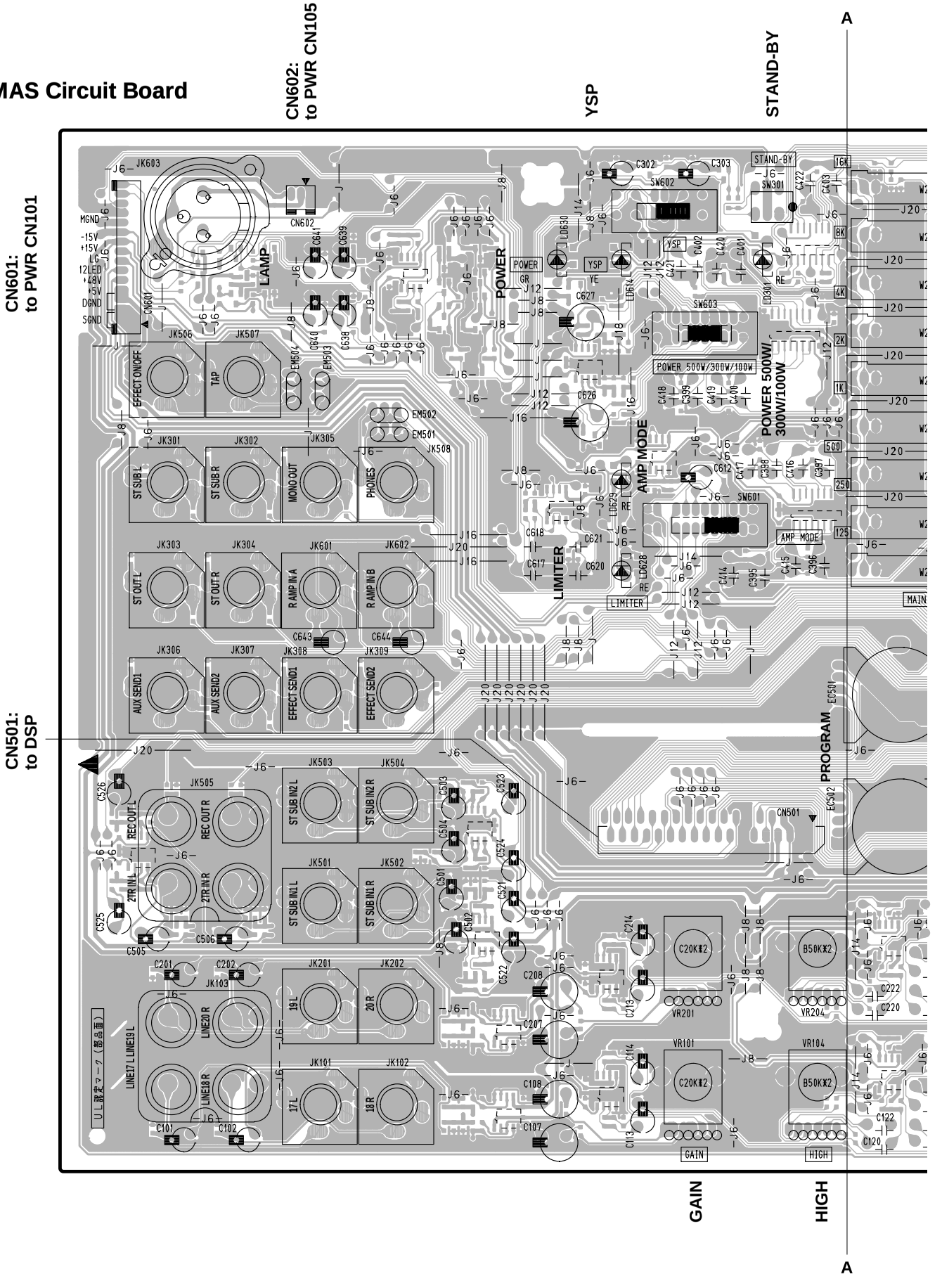

MAS: 3NA-V826750

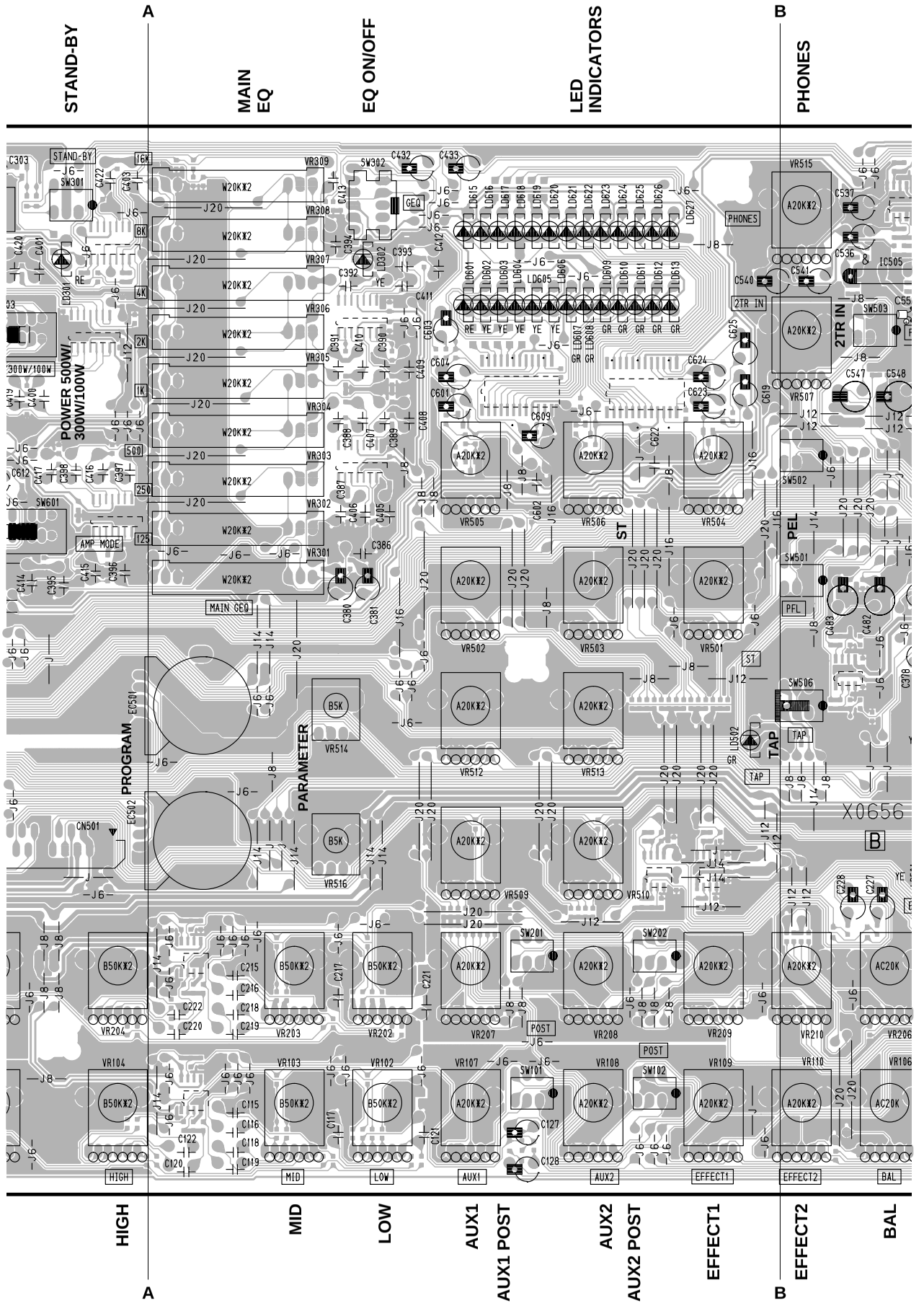
A
STAND-BY
MAIN EQ
EQ ON/OFF
LED INDICATORS
B
PHONES
POWER 500W/300W/100W
PROGRAM
PARAMETER
ST
PEL
TAP
2TR IN
HIGH
MID
LOW
AUX1
AUX1 POST
AUX2
AUX2 POST
EFFECT1
EFFECT2
BAL

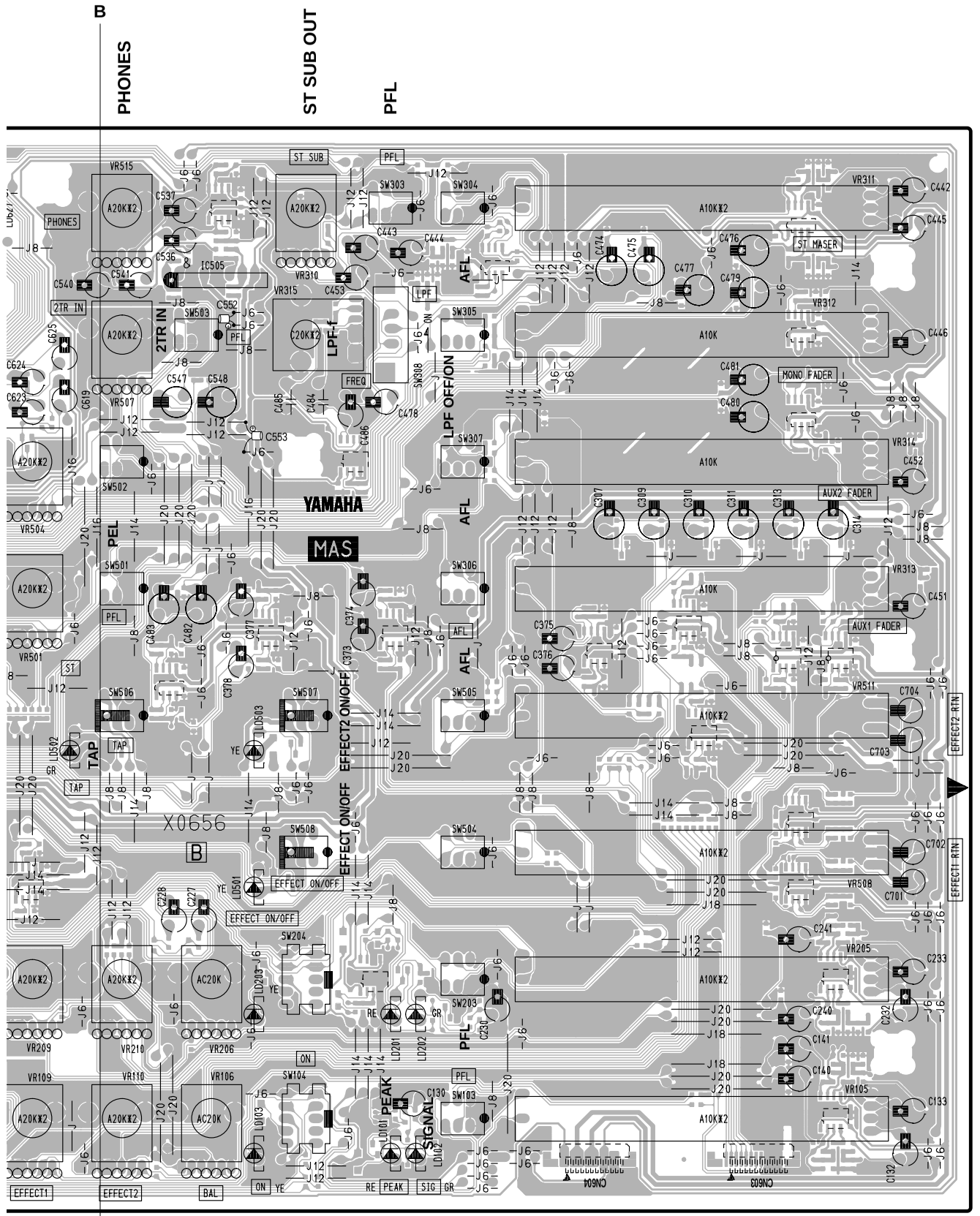

MAS: 3NA-V826750

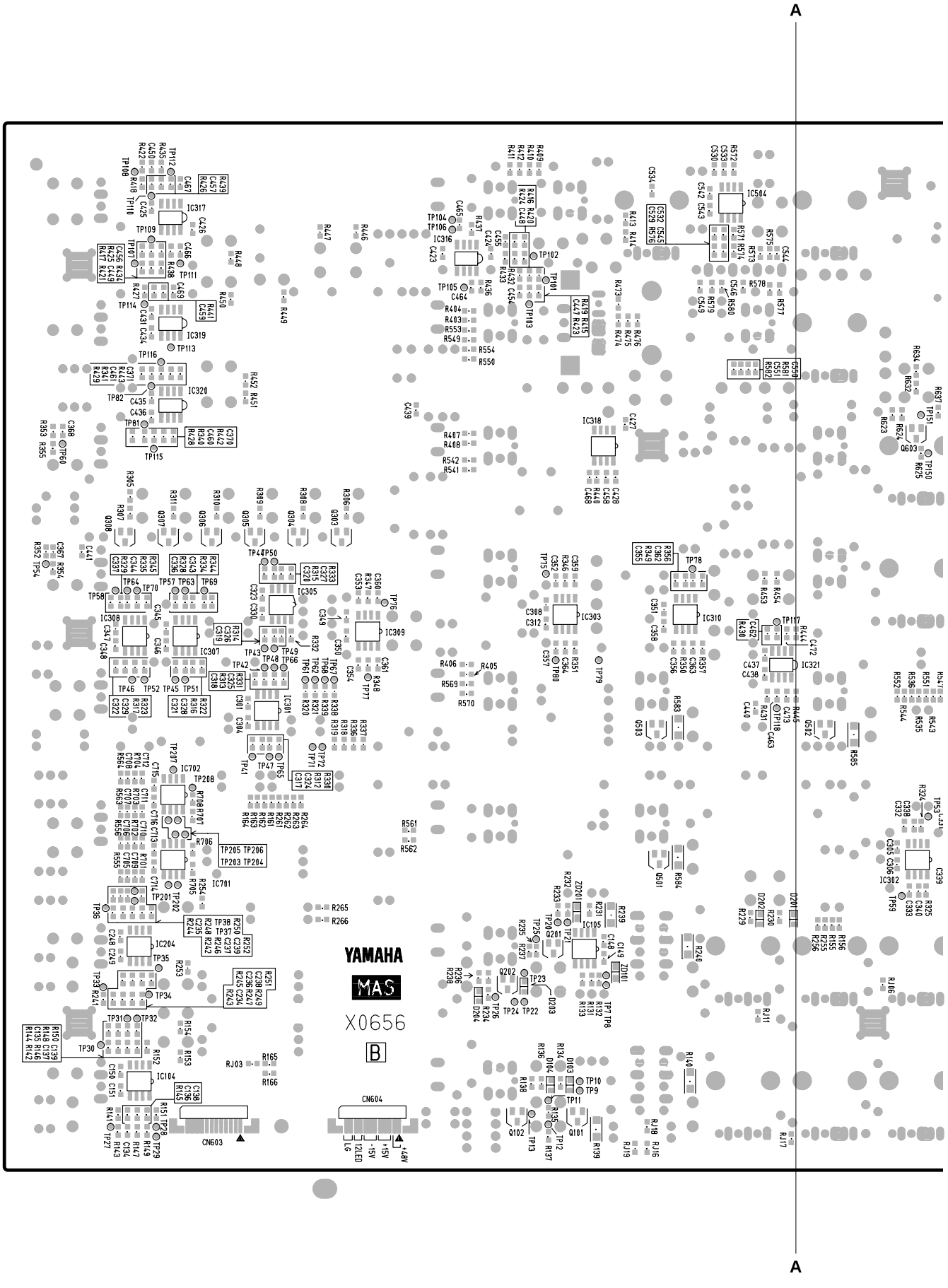

MAS: 3NA-V826750

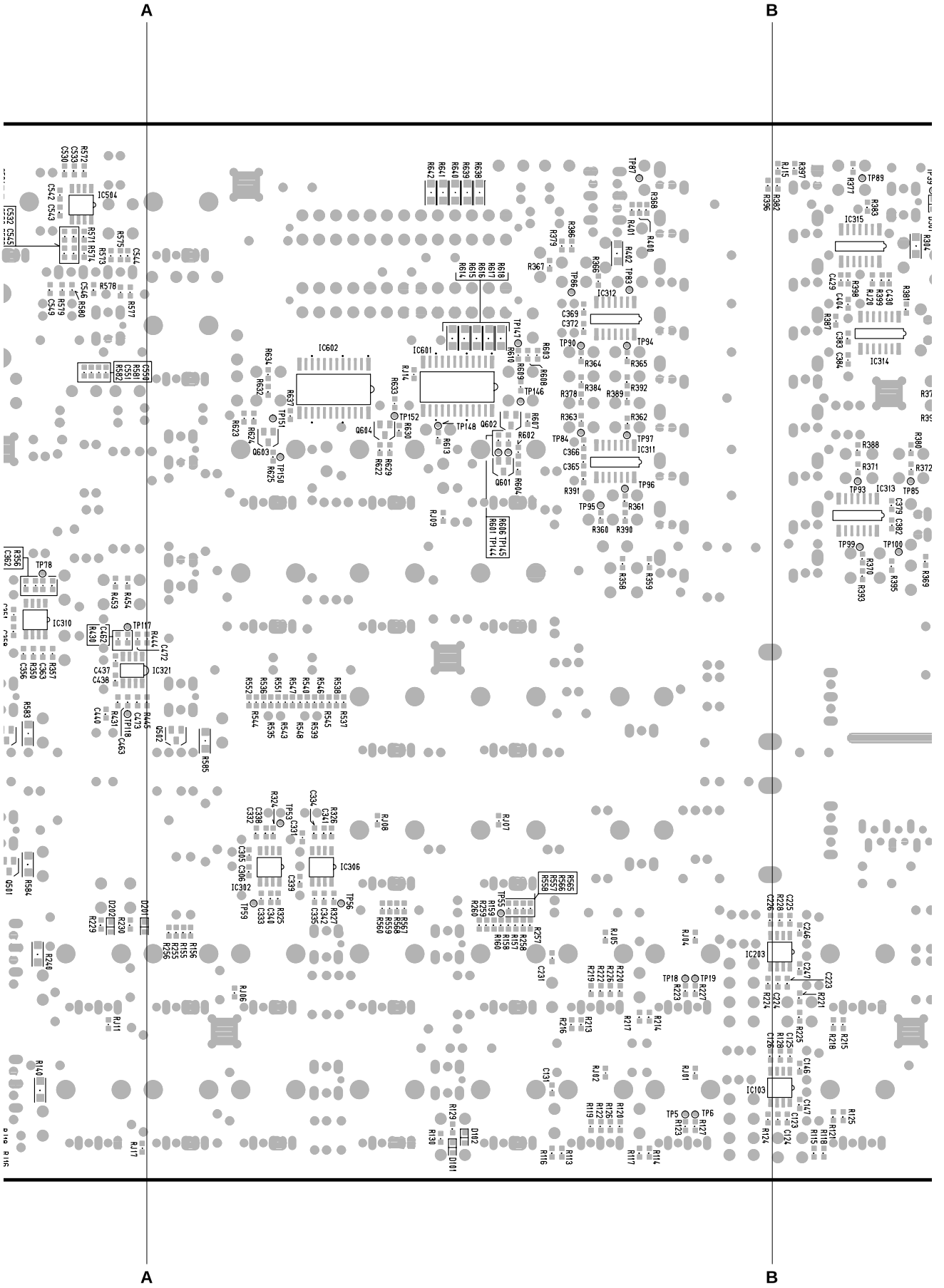
A
B
IC504
IC602
IC601
IC312
IC315
IC314
IC311
IC313
IC310
IC321
IC306
IC302
IC203
IC103
TP78
TP117
TP118
TP151
TP150
TP152
TP148
TP147
TP146
TP145
TP144
TP87
TP89
TP86
TP83
TP90
TP94
TP84
TP97
TP96
TP95
TP93
TP85
TP99
TP100
TP53
TP55
TP56
TP59
TP18
TP19
TP5
TP6
Q601
Q602
Q603
Q604
Q501
Q502
D201
D202
D101
D102
RJ09
RJ08
RJ07
RJ06
RJ05
RJ04
RJ02
RJ01
RJ14
RJ11
RJ17
RJ15
RJ16
RJ20

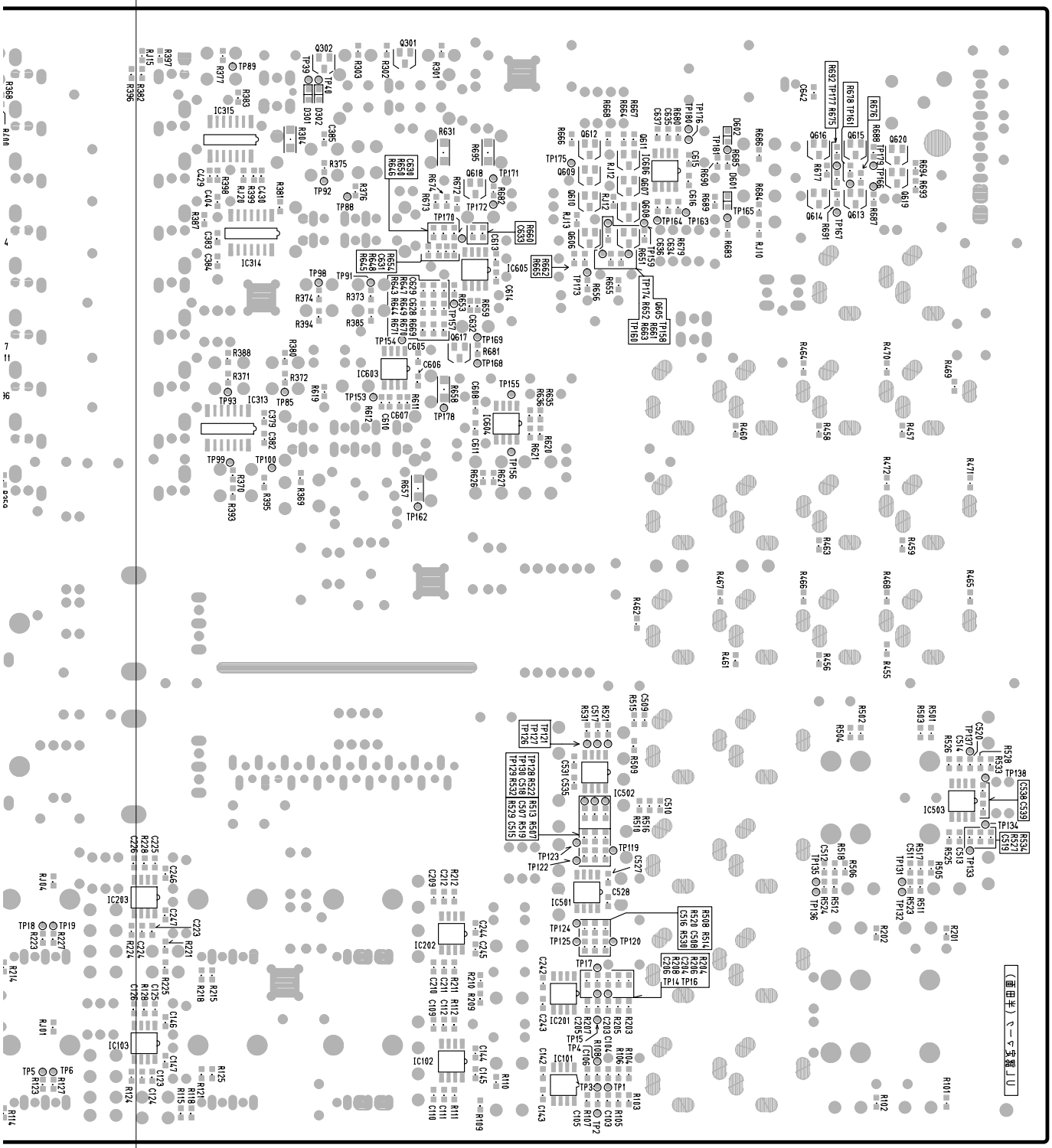
B
B
Pattern side

• SMPS 1/2 Circuit Board

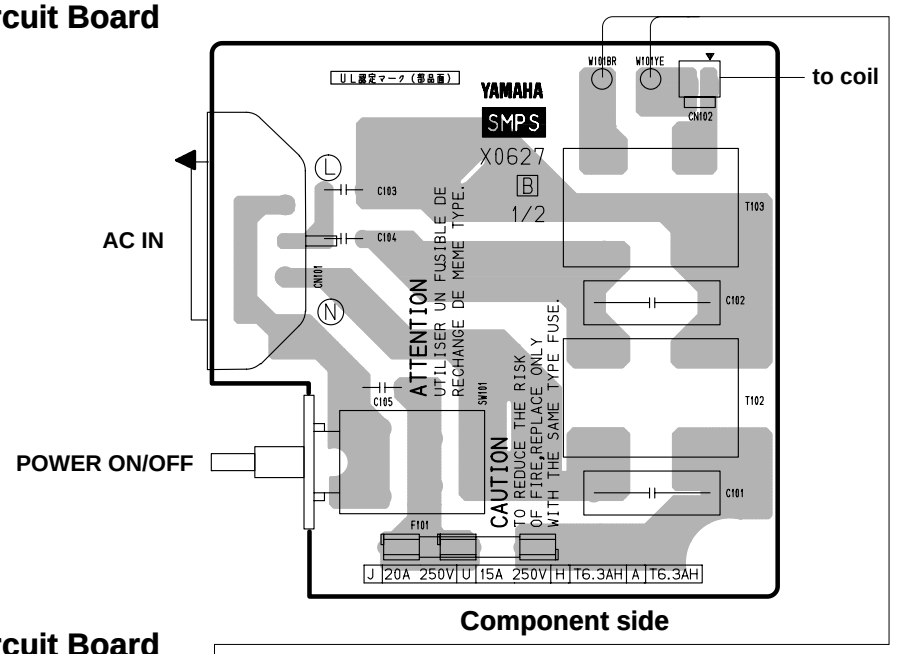

• SMPS 2/2 Circuit Board

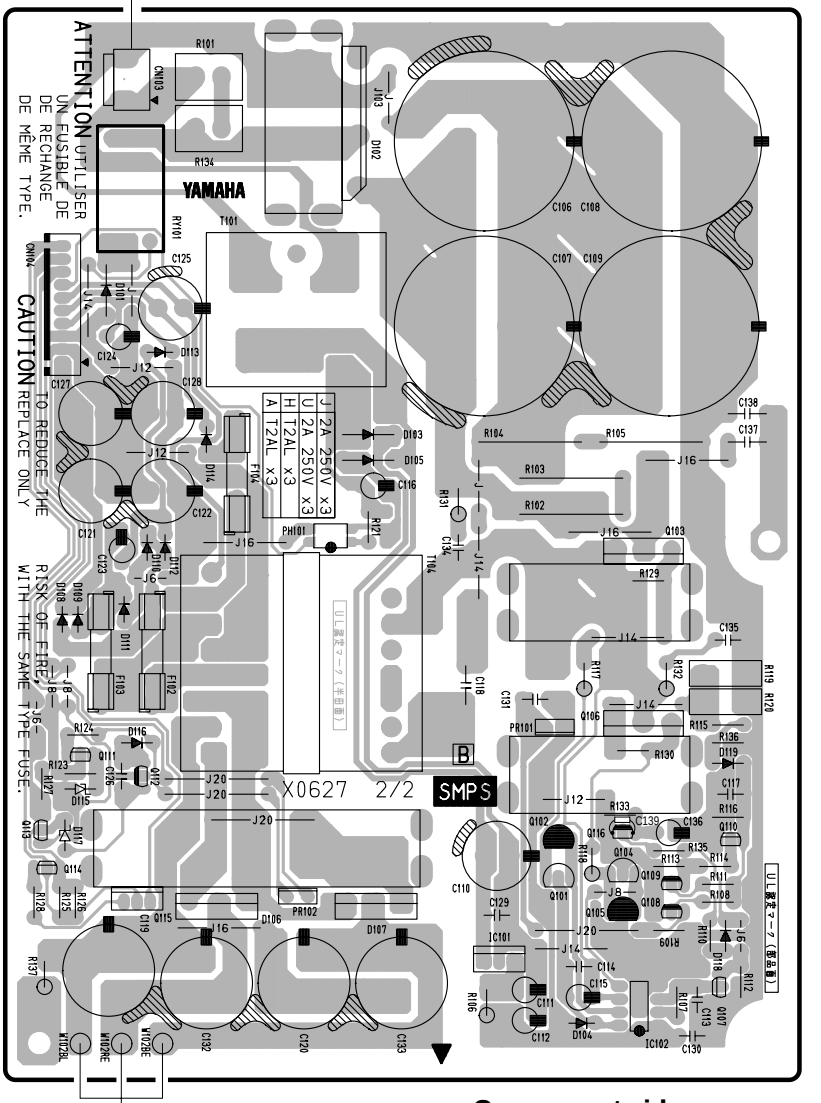

SMPS: 3NA-V826930

• PWR Circuit Board

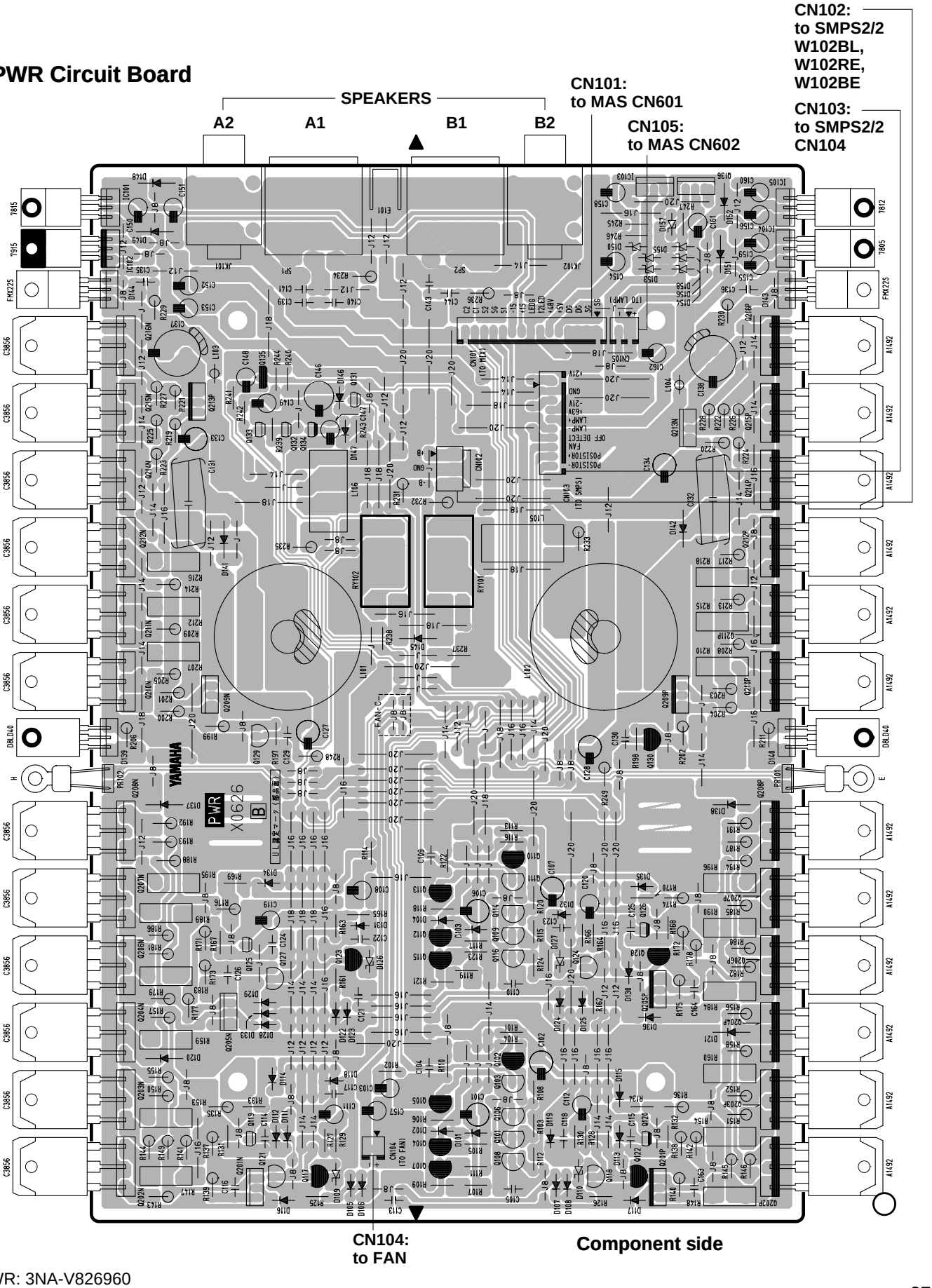

PWR: 3NA-V826960

• DSP-SPX Circuit Board

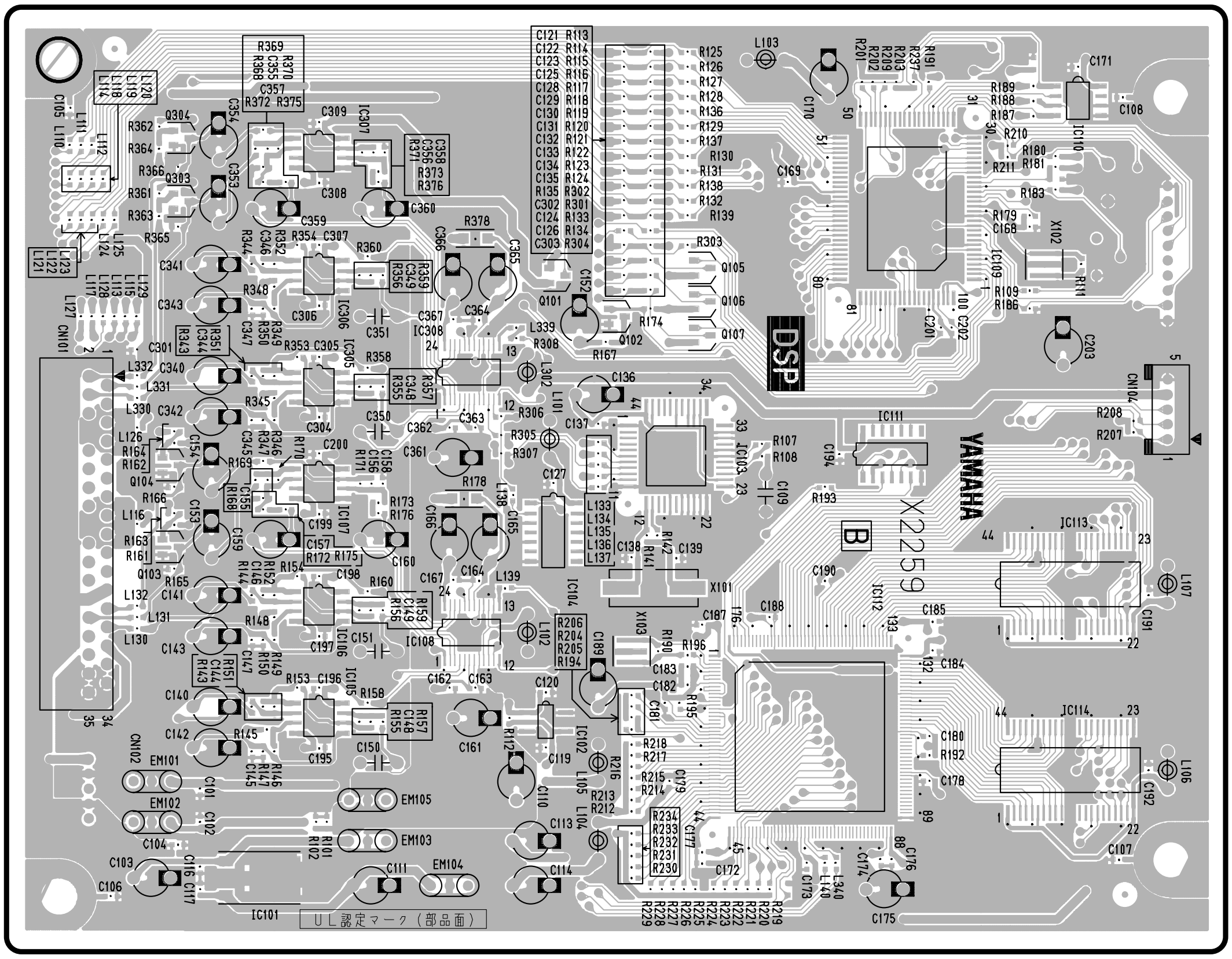

Component side

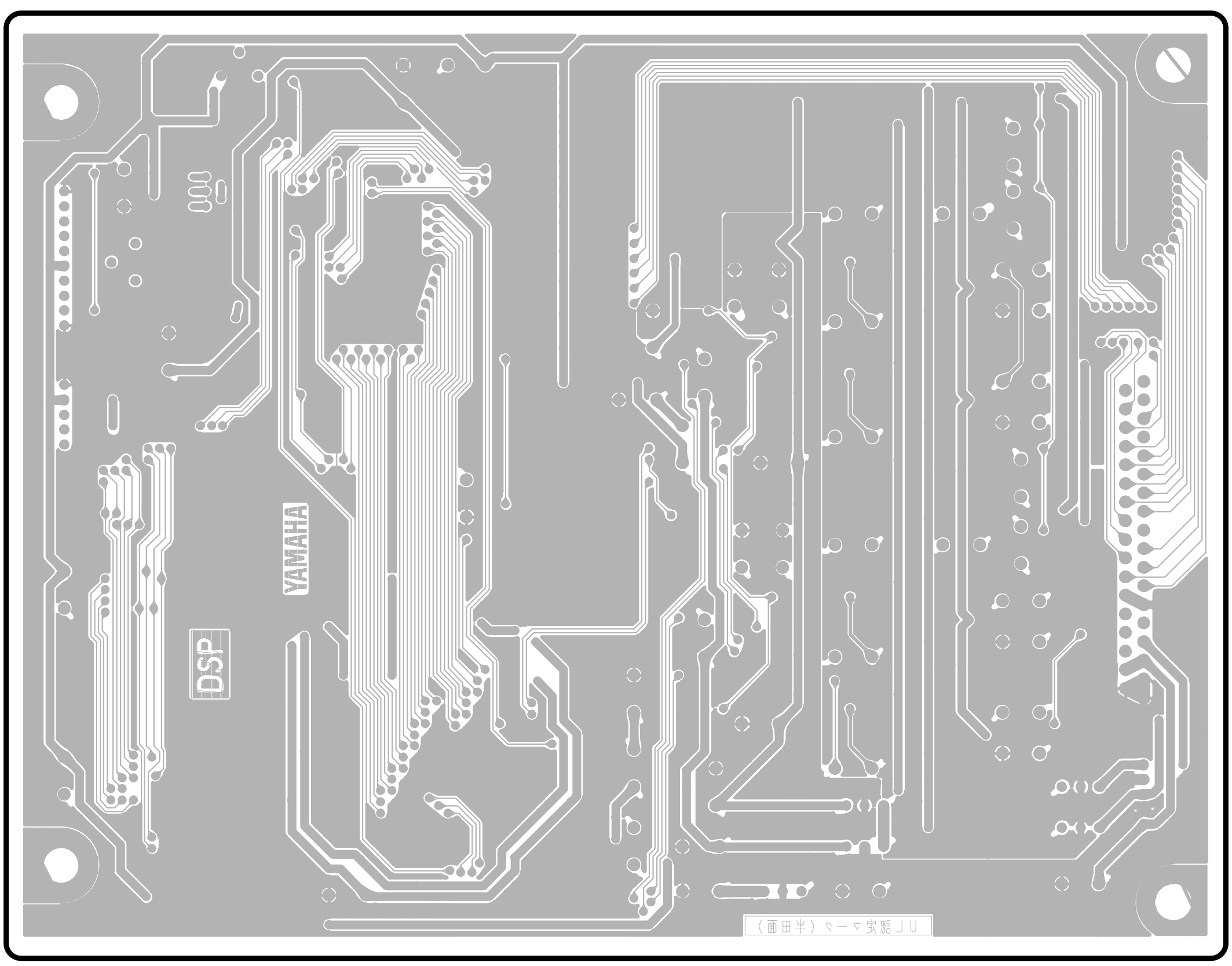

Pattern side

DSP-SPX: 3NA-V826730

INSPECTIONS

A. INSPECTIONS OF MIXER

1 PREPARATIONS

• Unless otherwise specified, the signal to be applied should be 1kHz, The sine wave and the signal source impedance should be 150 ohm. Also, the load resistance at each output terminal should be of the following values.

INSERT OUT, REC OUT	10k Ω
PHONES	40 (3W or more)
LAMP	30 (20W or more)
Other output terminals	600 Ω

• Unless otherwise specified, set the controls as follows.

1-1 CH INPUT (1-8: EMX5000-12/1-16: EMX5000-20)

26dB switch	OFF
GAIN control	MINIMUM
HPF switch	OFF
EQ(HIGH, MID, LOW) level control	CENTER
EQ MID FREQ control	MINIMUM
AUX 1,2 level control	MAXIMUM
AUX 1,2 POST switch	OFF
EFFECT 1,2 level control	MAXIMUM
PAN control	CENTER
ON switch	ON only during measurement, OFF at all other times.
PFL switch	OFF
fader	MAXIMUM

1-2 ST CH INPUT (9-12: EMX5000-12/17-20:EMX5000-20)

GAIN control	MINIMUM
EQ(HIGH, MID, LOW) level control	CENTER
AUX 1,2 level control	MAXIMUM
AUX 1,2 POST switch	OFF
EFFECT 1,2 level control	MAXIMUM
BAL control	CENTER
ON switch	OFF
PFL switch	OFF
fader	MAXIMUM

1-3 DIGITAL EFFECT (1,2)

PROGRSM select switch	16
PARAMETER control	MINIMUM
DIGITAL EFFECT ON switch	OFF
TAP switch (EFFECT 2)	OFF
EFFECT RTN fader	MAXIMUM only during measurement, MINIMUM at all other times.

1-4 ST SUB IN

AUX 1,2 level control	MAXIMUM
ST level control	MAXIMUM
PFL switch	OFF

1-5 2TR IN

ST level control	MAXIMUM
PFL switch	OFF

1-6 MASTER

GRAPHIC EQUALIZER GAIN control	CENTER
GRAPHIC EQUALIZER ON switch	OFF
AUX (1, 2), MONO OUT, ST OUT PFL switch	OFF
ST OUT AFL switch	OFF
MONO OUT LPF ON/OFF switch	OFF
MONO OUT LPF FREQ control	MINIMUM
PHONES, ST SUB OUT level control	MAXIMUM
ST1, MONO, MONITOR (1, 2), EFFECT fader	MAXIMUM
AUX (1, 2), MONO OUT, ST OUT fader	MAXIMUM

1-7 PHANTOM

PHANTOM switch	OFF

1-8 POWER AMP

SIGNAL SELECT switch	ST (L, R)
POWER SELECT switch	500W

1-9 YAMAHA SPEAKER PROCESSING switch — OFF

1-10 STAND-BY switch — OFF

2 GAIN

• In the state as described in 1 above, check that the output level within the range specified in Tables 2-1 to 2-5 can be obtained at each output terminal.

[Table 2-1] Input terminal [INPUT CH1-8: EMX5000-12 / 1-16: EMX5000-20] [Unit: dBs]

INPUT	INPUT LEVEL	GAIN	INSERT OUT	ST OUT (L,R)	ST SUB OUT (L,R)	MONO OUT	AUX 1,2 SEND (POST SW OFF)	AUX 1,2 SEND (POST SW ON)	EFFECT 1,2 SEND
INPUT A	-80	MAX.	-20 ± 2	+1 ± 2	-3 ± 2	+4 ± 2	0 ± 2	+10 ± 2	0 ± 2
	-54 (26dB ON)	MAX.	–	+1 ± 2	–	–	–	–	–
	-36	MIN.	–	+1 ± 2	–	–	–	–	–
INPUT B	-80	MAX.	–	+1 ± 2	–	–	–	–	–

[Table 2-2] Input terminal [INPUT CH1-8: EMX5000-12 / 1-16: EMX5000-20] [Unit: dBs]

INPUT	INPUT LEVEL	ST OUT (L,R)	REC OUT (L,R)	PHONES (L,R) *1
INSERT IN	-20	+1 ± 2	+20.8 ± 2	-11 ± 2

*1: Turn on the PFL switch of the channel to which the signal was input.

[Table 2-3] Input terminal [ST INPUT CH9-12: EMX5000-12 / 17-20: EMX5000-20] [Unit: dBs]

INPUT	INPUT LEVEL	GAIN	ST OUT L	ST OUT R	AUX 1,2 SEND (POST SW OFF)	AUX 1,2 SEND (POST SW ON)	EFFECT 1,2 SEND	PHONES (L, R) *1
9/11L 17/19L (PHONE)	-54	MAX.	+1 ± 2	–	-3 ± 2	+7 ± 2	-3 ± 2	-11 ± 2 (L)
10/12R 18/20R (PHONE)	-54	MAX.	–	+1 ± 2	-3 ± 2	+7 ± 2	-3 ± 2	-11 ± 2 (R)
9/11L 17/19L (PIN)	-54	MAX.	+1 ± 2	–	–	–	–	–
10/12R 18/20R (PIN)	-54	MAX.	–	+1 ± 2	–	–	–	–

*1: Turn on the PFL switch of the channel to which the signal was input.

[Table 2-4] Input terminal [ST SUB IN (1, 2)] [Unit: dBs]

INPUT	INPUT LEVEL	ST OUT L	ST OUT R	AUX 1, 2 SEND	PHONES L *1	PHONES R *1
L/MONO	-6	+10 ± 2	+10 ± 2	+13 ± 2	-1 ± 2	-1 ± 2
R	-6	–	+10 ± 2	+7 ± 2	–	-1 ± 2

*1: Turn on the PFL switch.

[Table 2-5] Input terminal [2TR IN] [Unit: dBs]

INPUT	INPUT LEVEL	ST OUT L	ST OUT R	PHONES L *1	PHONES R *1
L	-17.8	+10 ± 2	–	-1 ± 2	–
R	-17.8	–	+10 ± 2	–	-1 ± 2

*1: Turn on the PFL switch.

[Table 2-6] Input terminal [CH1: INPUT A], Output terminal [PHONES (L, R)] [Unit: dBs]

INPUT LEVEL	GAIN	ST AFL ON	MONO AFL ON	AUX 1, 2 AFL ON
-46	MIN.	-4 ± 2	-1 ± 2	-5 ± 2

3 FREQUENCY RESPONSE

• In each state as described in Tables 2-1, 2-2, 2-3 and 2-4, input a signal at the frequency of 20Hz and 20kHz and check that the output level at each output terminal is within the range of +1/-3dB with 1kHz used as a reference. At 20Hz with the GAIN control set at the MAX position only, however, check that the output level is within the range of +1dB/-4.5dB. For PHONES, take measurement at 2TR IN input terminal.

4 EQUALIZER CHARACTERISTICS

• In the state as described in 1, move each EQ control of INPUT and check that the output level of the frequency obtained at ST OUT falls within the range given in Table 4-1 with the output level obtained at the center click position used as a reference. If the output level at a specified frequency does not fall within the range given in Table 4-1, vary the frequency and check that the output level as specified in the table below is obtained. Also, check that the frequency variation at this time is within the range of specified frequency ±20%.

[Table 4-1] (INPUT CH1-8: EMX5000-12 / 1-16: EMX5000-20) [Unit: dBs]

EQ	level control	f control	Input frequency	Variation width
LOW	MAX.	–	10KHz	+12 ± 2
	MIN.	–		-12 ± 2
MID	MAX.	MIN.	250KHz	+15 ± 2.5
	MIN.			-15 ± 2.5
	MAX.	MAX.	5KHz	+15 ± 2.5
	MIN.			-15 ± 2.5
HIGH	MAX.	–	100Hz	+12 ± 2
	MIN.	–		-12 ± 2

[Table 4-2] Input terminal [ST INPUT, CH9-12: EMX5000-12 / CH17-20: EMX5000-20] [Unit: dBs]

EQ	level control	Input frequency	Variation width
LOW	MAX.	100Hz	+12 ± 2
	MIN.		-12 ± 2
MID	MAX.	2.5KHz	+15 ± 2.5
	MIN.		-15 ± 2.5
HIGH	MAX.	10KHz	+12 ± 2
	MIN.		-12 ± 2

4a HPF characteristic

• In the state as described in 1, set the input signal level to 80Hz and turn on the HPF switch of CH INPUT 1 and check that the output level of ST OUT L is within the range of –3±2dB with the level at the HPF switch OFF used as a reference.

5 GRAPHIC EQUALIZER CHARACTERISTICS

• In the state as described in 1, move the GEQ fader to the MIN or MAX position and check that the output level of the frequency obtained at ST1 OUT (L, R) falls within the range given in Table 5-1 with the output level obtained at the center click position used as a reference.
If the output level at a specified frequency does not fall within the range given in the table, vary the frequency and check that the output level in the range as specified in the table is obtained. Also, check that the frequency variation at this time is within the range of specified frequency ±20%.

[Table 5-1] [Unit: dBs]

		63	125	250	500	1k	2k	4k	8k	16k
Input signal frequency		63kHz	125kHz	250kHz	500kHz	1kHz	2kHz	4kHz	8kHz	16kHz
Variation width	MAX	+12 ± 2								
	MIN	-12 ± 2								

6 MONO OUT LPF

• In the state as described in 1, set the input signal level to 80Hz when the MONO OUT FREQ control is at the MIN position and to 120Hz when it is at the MAX position. (Applicable only for CH1 INPUT A)
Also check that the MONO OUT output level when the MONO OUT LPF ON/OFF switch is turned on is within the range of –3±2dB with the level at the switch OFF used as a reference.

7 PEAK LED LIGHTING LEVEL

• In the state as described in 1, input a signal to INPUT A, ST CH IN (PHONE) and check that the PEAK LED lights up at the input signal level as in Table 7-1.

[Table 7-1] [Unit: dBs]

Input channel	CH1~8/16	ST CH
Input signal level	-43 ± 3	-17 ± 3

8 SIGNAL LED LIGHTING LEVEL

• In the state as described in 1, input a signal to INPUT A, ST CH IN (PHONE) and check that the SIGNAL LED lights up at the input signal level as in Table 8-1.

[Table 8-1] [Unit: dBs]

Input channel	CH1~8/16	ST CH
Input signal level	-70 ± 3	-38 ± 3

9 LED METER LIGHTING LEVEL

• Check that when the output level of ST OUT is as in Table 9-1, each corresponding METER LED lights up.

[Table 9-1] [Unit: dBs]

LED	PEAK	+8	+5	+3	+1	0	-1
Lighting start level	+17 ± 2	+12 ± 2	+9 ± 2	+7 ± 2	+5 ± 2	+4 ± 2	+3 ± 2
LED	-3	-5	-7	-10	-15	-20	–
Lighting start level	+1 ± 2	+1 ± 2	-3 ± 2	-6 ± 2	-11 ± 2	-16 ± 2	–

10 DISTORTION FACTOR

• n the state as shown in Tables 2-1, 2-3, 2-4 and 2-5, check that the distortion factor when +14dBs output is obtained at each output terminal is 0.1% or less (except for REC OUT, INSERT OUT and PHONES).
In the case of PHONES, set the 12 o'clock point of the level control to the nominal position and check that the distortion factor when +3dBs output is obtained is 0.2% or less.

11 MAXIMUM OUTPUT

• In the state as described in 1, set the GAIN control to the MAX position (or turn PAN or BAL VR clockwise or counterclockwise fully when measuring at ST OUT), check that + 20dBs output with 1% or less distortion factor is obtained at ST OUT, MONO OUT and AUX SEND. Also, check that +8dBs output with 1% or less distortion factor is obtained at PHONES.

12 EIN

- In the state as described in 1, set only the fader and GAIN control VR of the channel being measured to the MAX position, turn PAN or BAL VR counterclockwise fully, set the fader of all the other channels to the MIN position and short-circuit the INPUT A terminal with 150 ohm. Then check that the noise level obtained at ST OUT L is -43dBs or less.
- If it exceeds -43dBs, calculate the input converted noise level of each channel and check that the result is -127dBs or less. (Use the DIN audio filter.)

13 RESIDUAL NOISE

- In the state as described in 1, set all Fader/Level controls in the INPUT section to the MIN position. Then set the Fader/Level controls in the MASTER section to the MAX or MIN position and check that the noise level at ST OUT, MONO OUT, AUX SEND and EFFECT OUT (without MASTER level control) is at the level indicated in Table 10-1 or less.

[Table 13-1]

fader/level control	ST OUT (L, R)	MONO OUT	AUX 1,2 SEND	EFFECT SEND	PHONES
MAX	-73	-73	-70	-80	-78
MIN	-95	-93	-95	–	-96

14 PHANTOM

- Connect a 10k ohms load resistance between pins 1 and 2 of INPUT A to short-circuit between pins 2 and 3. Then check that +35±3 V voltage is obtained at both ends of the load resistance when the PHANTOM switch is turned on.

15 LAMP TERMINAL

- The voltage at the LAMP terminal should be 12±1V (DC) (30 ohm load)
  Measure the voltage between pins 2 and 3.

16 DIGITAL EFFECT

- In the state as described in 1, input -36 dBs signal to CH1 INPUT A and set AUX1 level control to the MIN position and EFFECT1 level control as well as the CH fader to the MAX position.
  Then with the PROGRAM select switch set to 16, PARAMETER VR to MIN and AUX1 EFFECT RTN VR to the MAX position, check that the output signal level at AUX1 OUT is larger than 0dBs when the DIGITAL EFFECT ON switch is turned on.

17 STAND-BY

- In the state as described in 1, apply a signal from CH INPUT A and set the level of ST OUT (L o R) / AUX SEND (1 o 2) / EFFECT SEND (1 o 2) output terminals to +14dB. Then turn on the STAND-BY switch and check that the output level is –46dB or less and that the LED flashes.

18 STABILITY

- Connect a load resistance to the power amplifier output for this inspection.
- Check that no abnormality such as oscillation occurs when a 10pF to 0.1μF capacitor is connected in parallel with a load resistance at each output terminal.
- Check that no abnormality such as oscillation occurs when all faders, level controls and equalizer are set to the MAX position. (Short-circuit the input terminal with 150 ohm.)

B. INSPECTION OF POWER AMPLIFIER

● Inspection of SIGNAL SELECT switch MAIN L – MAIN R, AUX1 – AUX2

1 PREPARATIONS

- Input terminal: ST SUB IN 1 L/MONO
- SIGNAL SELECT switch: MAIN L-MAIN R
- POWER SELECT switch: 500W+500W
- Output terminal: SPEAKERS A2, SPEAKERS B2
- Load resistance: 40 Ω (500W or more)
  Unless otherwise specified, the load resistance of the speakers should be connected only when checking the power amplifier.
- Set INPUT CH1-20 (EMX5000-20) / CH1 – 12 (EMX5000-12), ST SUB IN 2 and 2TR IN level controls to the MIN position.
- Other than the above, use the same setting as described under PREPARATIONS for inspection.

2 Muting function at power ON

- Check that the muting function is cancelled and the relay turns on at 2.5±1 seconds after the POWER switch is turned on.

3 Fan

• Short-circuit the 2 J wires within the frame marked FAN-C in the center of the PWR circuit board and check that the fan runs at a low speed.

4 DC voltage at output terminal

• Check that the DC voltage at the output terminal is 0±100mV when the input terminal is grounded.

5 GAIN

• Input a -19 dBs signal to the input terminal and check that the output level of the measured gain is as specified in Table 5-1 when the SIGNAL SELECT switch setting is changed.
Check all the output terminals other than BRIDGE (1+, 2+). For SIGNAL SELECT switch MAIN L – MAIN R, also check with the select position of the POWER SELECT switch changed.

[Table 5-1] Gain [Unit: dBs]

POWER AMP switch	MAIN L-MAIN R			AUX1-MONO	AUX1-AUX2
	500W+500W	300W+300W	100W+100W		
SPEAKERS A1 (1+, 1-), A2	22.2 ± 2.0	20.0 ± 2.0	15.2 ± 2.0	25.2 ± 2.0	25.2 ± 2.0
SPEAKERS B1 (1+, 1-), B2 SPEAKERS A1 (2+, 2-)	22.2 ± 2.0	20.0 ± 2.0	15.2 ± 2.0	25.2 ± 2.0	25.2 ± 2.0

6 FREQUENCY RESPONSE

• YAMAHA SPEAKERS PROCESSING switch OFF
Input -19 dBs signal to the input terminal and check that the output voltage at 20Hz and 20kHz signal frequency is within the range of +1/-3dB with 1kHz used as a reference.
• YAMAHA SPEAKERS PROCESSING switch ON
Input 70Hz/-19dBs signal to the input terminal and check that the output voltage when YAMAHA SPEAKERS PROCESSING switch is turned off is within the range of +6.2±2dB with 1kHz output voltage used as a reference.

7 TOTAL HARMONIC DISTORTION

• Input a 1kHz signal to the input terminal and check that the total harmonic distortion is 0.5% or less when 500W + 500W/4 Ω (35.2 dBs) output is obtained.
• Also, input 20Hz, 1kHz and 20kHz signals to the input terminal and check that the total harmonic distortion is 0.5% or less when 250W + 250W/4 Ω (32.2 dBs) signal is obtained at the output terminal.
* Be sure to finish this inspection within 30 seconds.

8 RESIDUAL NOISE

• Set the ST MASTER level control to the MIN position and check that the noise level at the output terminal is -65dBs. Use care so that the measurement is not affected by the induction noise. (Use the DIN audio filter.)

9 STABILITY

• With 10kHz, -3.2dBs rectangular wave inputted, connect 10pF to 0.47μF static capacitance in parallel with 4 Ω load resistance or 10μH to 0.47H inductance in series and check that the following requirements are satisfied.

Overshoot: Vp/Vo ≦ 1.8
Ringing: Within 5 waves

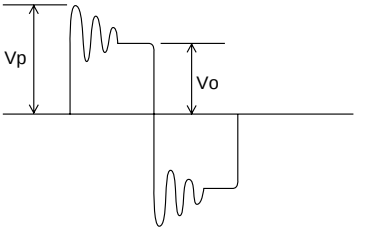

• Disconnect 4 Ω load resistance to make the load consisting of 10pF to 0.47μF static capacitance only and check that ringing is within 7 waves at Vp/Vo</=2.5 and no oscillation or the like occurs.

10 PROTECTION CIRCUIT

• With a signal input to POWER AMP IN (L), clip the output waveform of the 10Hz signal and check that the protection circuit functions to prevent the relay from opening.
• Check that the protection circuit functions within 2 seconds to shut off the output when a 1Hz, Vp-p=10V(13.2dBs) signal is input and the output is restored automatically within 5 seconds when the input signal is stopped.

11 PC LIMITER CIRCUIT, LIMITER CIRCUIT

• With 1 Ω load resistance (±5%, 100W) connected to the output terminal, input a 0dBs signal to the input terminal and observe the output terminal using an oscilloscope. At this time, the protection circuit should function to shut off the output, the LIMITER indicator should light up and the output should be restored automatically within 5 seconds when the input signal is stopped.

12 EFFICIENCY

• Input a 1kHz, -15dBs signal and check that the primary power is 360±50W. If the primary power is not within the specified range, adjust the input level so that 15.8V (26.2dBs) output is obtained at SPEAKER S and take measurement again.

● INSPECTION OF SIGNAL SELECT switch BRIDGE

1 PREPARATIONS

• Input terminal: ST BUS IN 1 L/MONO
• SIGNAL SELECT switch: MONO-RIDGE
• POWER SELECT switch: 500W+500W
• Output terminal: SPEAKER A1 (1+, 2+)
• Load resistance: 8 ohm (1000W or more)
Unless otherwise specified, the load resistance of the speakers should be connected only when performing inspection.
• Set all the INPUT CH1 to 20 (EMX5000-20) / CH1 to 12 (EMX500-12), ST SUB IN 2 and 2TR IN level controls to the MIN position.
• Other than the above, use the same settings as described under “Inspection 1” for inspection.

• Connection of measuring equipment

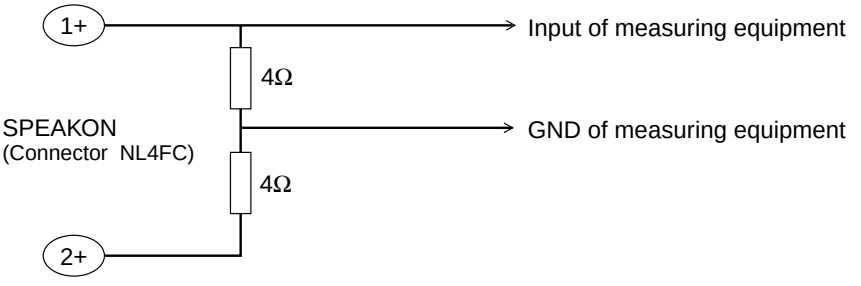

2 GAIN

• Input a -22.0dBs signal to the input terminal and check that +22.2±2 dBs output is obtained.

3 FREQUENCY RESPONSE

• Input -22.0dBs signals to the input terminal and check that the output voltage when the signal frequency is 20Hz or 20kHz is within the range of +1/-3dB with 1kHz used as a reference.

C. OTHER INSPECTION

1 POWER VOLTAGE VARIATION

• Check that no abnormality occurs with operation even when the power voltage is varied by ±10%.

D. FACTORY SETTINGS

• EQ (GAIN), GEQ, PAN, BAL	CENTER
• PROGRAM select	1
• All VR/FADER controls other than above	MINIMUM
• All push switches	OFF (light off)
• PHANTOM switch	OFF
• SIGNAL SELECT switch	MAIN (L, R)
• POWER SELECT switch	500W+500W
• YAMAHA SPEAKER PROCESSING switch	ON

EMX5000-12/20

POWERED MIXER

PARTS LIST

■ CONTENTS

OVERALL ASSEMBLY 2
ELECTRICAL PARTS 6

Notes : DESTINATION ABBREVIATIONS

A : Australian model	M : South African model
B : British model	O : Chinese model
C : Canadian model	Q : South-east Asia model
D : German model	T : Taiwan model
E : European model	U : U.S.A. model
F : French model	V : General export model (110V)
H : North European model	W: General export model (220)
I : Indonesian model	N,X: General export model
J : Japanese model	Y : Export model
K : Korean model	

■ WARNING

Components having special characteristics are marked ⚠ and must be replaced with parts having specification equal to those originally installed.

- The numbers “QTY” show quantities for each unit.
- The parts with “--” in “PART NO.” are not available as spare parts.
- This mark “ } ” in the REMARKS column means these parts are interchangeable.
- The second letter of the shaded ( ) part number is O, not zero.
- The second letter of the shaded ( ) part number is I, not one.

OVERALL ASSEMBLY

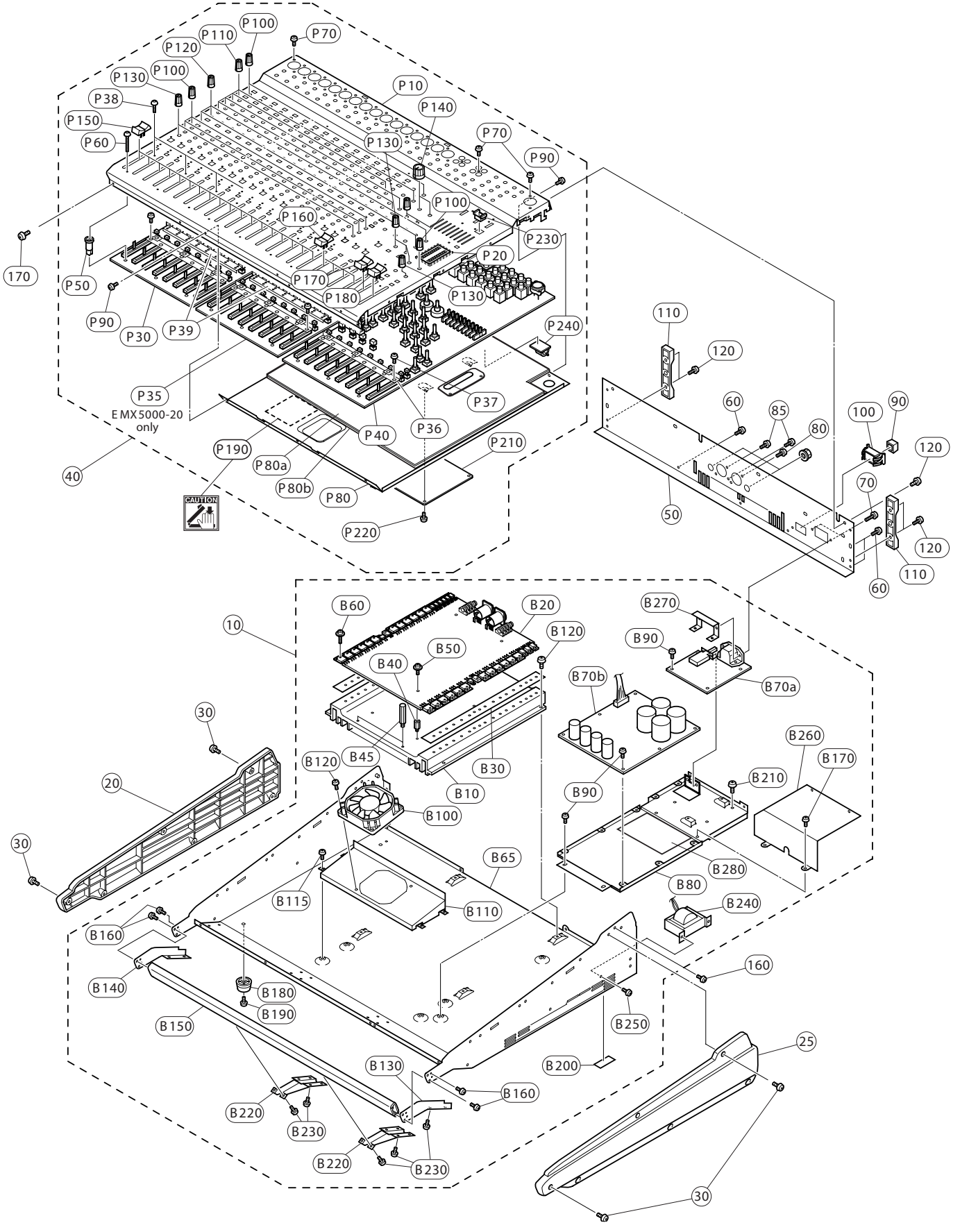

	REF NO.	PART NO.	DESCRIPTION			REMARKS		QTY	RANK
			OVERALL ASSEMBLY			EMX5000-12/20			
		--	Overall Assembly			EMX5000-20 J	(V849350)		
		--	Overall Assembly			EMX5000-20 U,V	(V849360)		
		--	Overall Assembly			EMX5000-20 H,B,W	(V849370)		
		--	Overall Assembly			EMX5000-20 A	(V849380)		
		--	Overall Assembly			EMX5000-20 K	(V945780)		
		--	Overall Assembly			EMX5000-12 J	(V821180)		
		--	Overall Assembly			EMX5000-12 U,V	(V821190)		
		--	Overall Assembly			EMX5000-12 H,B,W	(V821210)		
		--	Overall Assembly			EMX5000-12 A	(V821220)		
		--	Overall Assembly			EMX5000-12 K	(V945720)		
		VV104600	Cord Holder	CV-100				2	01
		--	Name Plate	KOREA		EMX5000-20 K	(V945790)		
		--	Name Plate	KOREA		EMX5000-12 K	(V945730)		
	10	--	Bottom Assembly			EMX5000-20 J	(V849400)		
	10	--	Bottom Assembly			EMX5000-20 U,V	(V849410)		
	10	--	Bottom Assembly			EMX5000-20 H,B,W,K	(V849420)		
	10	--	Bottom Assembly			EMX5000-20 A	(V849430)		
	10	--	Bottom Assembly			EMX5000-12 J	(V848310)		
	10	--	Bottom Assembly			EMX5000-12 U,V	(V848340)		
	10	--	Bottom Assembly			EMX5000-12 H,B,W,K	(V848350)		
	10	--	Bottom Assembly			EMX5000-12 A	(V848360)		
*	20	**V8427400**	Side Pad	LEFT					
*	25	**V8427500**	Side Pad	RIGHT					
	30	**EG340190**	Bind Head Tapping Screw-B	4.0X8 MFZN2BL				6	01
	40	--	Panel Assembly			EMX5000-20	(V849390)		
	40	--	Panel Assembly			EMX5000-12	(V848240)		
*	50	**V8422700**	Rear Panel			EMX5000-20 J			
*	50	**V8422800**	Rear Panel			EMX5000-20 U,V			
*	50	**V8422900**	Rear Panel			EMX5000-20 H,B,W,K			
*	50	**V8423000**	Rear Panel			EMX5000-20 A			
*	50	**V8421000**	Rear Panel			EMX5000-12 J			
*	50	**V8421200**	Rear Panel			EMX5000-12 U,V			
*	50	**V8421300**	Rear Panel			EMX5000-12 H,B,W,K			
*	50	**V8421400**	Rear Panel			EMX5000-12 A			
	60	**EP600230**	Bind Head Tapping Screw-B	3.0X6 MFZN2BL		EMX5000-20 J,U,V,H,B,W,K		11	01
	60	**EP600230**	Bind Head Tapping Screw-B	3.0X6 MFZN2BL		EMX5000-20 A		10	01
	60	**EP600230**	Bind Head Tapping Screw-B	3.0X6 MFZN2BL		EMX5000-12		10	01
	70	**VQ074600**	Bind Head Tapping Screw-B	3.0X12 MFZN2BL				2	01
	80	**VN413300**	Bonding Tapping Screw-B	3.0X8 MFZN2BL					01
	85	**V9568800**	Flat Fillister H.Tapping Screw	#B (+) 3.0X8 MFZN2BL				4	01
	90	**VU859000**	Power Switch Knob			POWER SW			01
	100	**VU859100**	Escutcheon, Power Switch						02
*	110	**V8490400**	Connector Guard					2	
	120	**EP600230**	Bind Head Tapping Screw-B	3.0X6 MFZN2BL				4	01
	160	**EP600230**	Bind Head Tapping Screw-B	3.0X6 MFZN2BL		EMX5000-20		8	01
	160	**EP600230**	Bind Head Tapping Screw-B	3.0X6 MFZN2BL		EMX5000-12		15	01
	170	**VR779900**	Bonding Tapping Screw-B	4.0X8 MFZN2BL		EMX5000-20		7	01
	170	**VR779900**	Bonding Tapping Screw-B	4.0X8 MFZN2BL		EMX5000-12		6	01
	180	--	Label			U,V	(VA03930)		03
			BOTTOM ASSEMBLY			EMX5000-20			
		--	Bottom Assembly			EMX5000-20 J	(V849400)		
		--	Bottom Assembly			EMX5000-20 U,V	(V849410)		
		--	Bottom Assembly			EMX5000-20 H,B,W,K	(V849420)		
		--	Bottom Assembly			EMX5000-20 A	(V849430)		
		--	Bottom Assembly			EMX5000-12 J	(V848310)		
		--	Bottom Assembly			EMX5000-12 U,V	(V848340)		
		--	Bottom Assembly			EMX5000-12 H,B,W,K	(V848350)		
		--	Bottom Assembly			EMX5000-12 A	(V848360)		
*		**V8502000**	Connector Assembly	24185&24185 10P					
	B10	--	Heat Sink				(V842330)		
*	B20	**V8269600**	Circuit Board	PWR					
*	B30	**V8424400**	Insulation Sheet					2	
	B40	**VV086500**	Support	H=7.4 B=5.5				4	01
*	B45	**V9140500**	Support	H=30 B=5.5				2	
	B50	**EG330290**	Bind Head Screw	SP 3.0X8 MFZN2Y				4	01
	B60	**VJ470900**	Pan Head Screw	SPK 3.0X12 MFZN2Y				34	
*	B65	**V8420700**	Bottom Chassis			EMX5000-20			
*	B65	**V8420600**	Bottom Chassis			EMX5000-12			

*: New Parts

RANK: Japan only

	REF NO.	PART NO.	DESCRIPTION		REMARKS	QTY	RANK
*	B70a	AAX33190	Circuit Board	SMPS 1/2	J (V826930,X0627B0)		
*	B70a	AAX33200	Circuit Board	SMPS 1/2	U,V (V826940,X0627B0)		
*	B70a	AAX33210	Circuit Board	SMPS 1/2	H,B,W,K (V826950,X0627B0)		
*	B70a	AAX71680	Circuit Board	SMPS 1/2	A (X848520,X0627B0)		
*	B70b	AAX74520	Circuit Board	SMPS 2/2	J (V826930,X0627B0)		
*	B70b	AAX74530	Circuit Board	SMPS 2/2	U,V (V826940,X0627B0)		
*	B70b	AAX33230	Circuit Board	SMPS 2/2	H,B,W,K (V826950,X0627B0)		
*	B70b	AAX33250	Circuit Board	SMPS 2/2	A (V848520,X0627B0)		
	B80	--	Switching Board Holder		(V842770)		
	B90	EP600230	Bind Head Tapping Screw-B	3.0X6 MFZN2BL		13	01
	B100	V6024100	Fan	3110GL-B5W-B50-H01			08
	B110	--	Fan Shield		(V842450)		
	B115	EP600230	Bind Head Tapping Screw-B	3.0X6 MFZN2BL		4	01
	B120	EP600240	Bind Head Tapping Screw-B	4.0X10 MFZN2BL	DC FAN	6	01
*	B130	V8424600	Angle Bracket	RIGHT			
*	B140	V8424700	Angle Bracket	LEFT			
*	B150	V8424900	Handle		EMX5000-20		
*	B150	V8424800	Handle		EMX5000-12		
	B160	EP600240	Bind Head Tapping Screw-B	4.0X10 MFZN2BL		4	01
	B170	EP600230	Bind Head Tapping Screw-B	3.0X6 MFZN2BL		2	01
	B180	VV085600	Leg			4	01
	B190	VR138400	Bind Head Tapping Screw-B	4.0X12 MFZN2BL		4	01
	B200	V7394400	Screw Cover		EMX5000-20	2	
	B200	V7394400	Screw Cover		EMX5000-12	5	
	B210	EG340290	Bind Head Screw	A4.0X6 MFZN2BL			01
*	B220	V8490500	Handle Bracket			2	
	B230	EP600230	Bind Head Tapping Screw-B	3.0X6 MFZN2BL		12	01
	B240	V8291500	Coil	4.4mH	J,H,B,W,A,K		
*	B240	V9094700	Coil	5.4mH	U,V		
	B250	EP600230	Bind Head Tapping Screw-B	3.0X6 MFZN2BL		2	01
	B260	--	AC Shield		(V842710)		
	B270	V8098800	Angle Bracket, AC Inlet				01
	B280	--	Transformer Cover		(V765040)		
			PANEL ASSEMBLY				
		--	Panel Assembly		EMX5000-20 (V849390)		
		--	Panel Assembly		EMX5000-12 (V848240)		
*		MFA12060	Card Cable	12P 60MM P=1.0	EMX5000-20	4	01
*		MFA12060	Card Cable	12P 60mm P=1.0	EMX5000-12	2	01
*		V8502500	Connector Assembly	24185&2426 15P370L			
*		V8502600	Connector Assembly	24185&2426 2P 400L			
		--	FFC Cable	BNCDP=1.25K-35-110	(V910530)		
*	P10	V8420500	Control Panel		EMX5000-20		
*	P10	V8420400	Control Panel		EMX5000-12		
*	P20	V8427300	LED Cover				
*	P30	V8267400	Circuit Board	IN8			
*	P35	V9093100	Circuit Board	IN16	EMX5000-20		
	P36	--	Angle Bracket	SLIDE VR	EMX5000-20 (V914040)	3	
	P36	--	Angle Bracket	SLIDE VR	EMX5000-12 (V914040)	2	
*	P37	V9285700	Bind Head Screw	2.0X4 MFZN2Y SP	EMX5000-20	24	
*	P37	V9285700	Bind Head Screw	2.0X4 MFZN2Y SP	EMX5000-12	16	
*	P38	V9156000	Screw	3X6 MFZNBL	EMX5000-20	9	
*	P38	V9156000	Screw	3X6 MFZNBL	EMX5000-12	6	
	P39	--	LED Spacer		EMX5000-20 (V929180)	2	
	P39	--	LED Spacer		EMX5000-12 (V929180)	1	
*	P40	V8267500	Circuit Board	MAS			
	P50	V3291600	PCB Support	NEW NIFCO	EMX5000-20	29	01
	P50	V3291600	PCB Support	NEW NIFCO	EMX5000-12	20	01
	P60	V3289800	Screw	3X25 MFZNBL	EMX5000-20	29	01
	P60	V3289800	Screw	3X25 MFZNBL	EMX5000-12	20	01
	P70	VN413300	Bonding Tapping Screw-B	3.0X8 MFZN2BL	EMX5000-20	36	01
	P70	VN413300	Bonding Tapping Screw-B	3.0X8 MFZN2BL	EMX5000-12	20	01
	P80	--	Shield Sheet	MAIN	(V842320)		
	P80a	--	Shield Sheet	SUB V	(V928030)		
	P80b	--	Shield Sheet	SUB H	(V928040)		
	P90	EP600230	Bind Head Tapping Screw-B	3.0X6 MFZN2BL		6	01
	P100	V6225600	Knob	L-GRAY/M-GRAY	EMX5000-20 GAIN(CH1-16,17/18,19/20), EFF1(CH1-16,17/18,19/20), EFF2(CH1-16,17/18,19/20),	57	01

*: New Parts

RANK: Japan only

	REF NO.	PART NO.	DESCRIPTION			REMARKS	QTY	RANK
						PARAMETER (EFFECT1 RTN,EFFECT2 RTN) PHONES		
	P100	**V6225600**	Knob	L-GRAY/M-GRAY		EMX5000-12 GAIN(CH1-12),EFF1(CH1-12),	33	01
						EFF2(CH1-12),PARAMETER (EFFECT1 RTN,EFFECT2 RTN), PHONES)		
	P110	**V6225300**	Knob	GREEN/M-GRAY		EMX5000-20 HIGH(CH1-16,17/18,19/20),	72	01
						MID-f(CH1-16), MID(CH1-16,17/18,19/20), LOW(CH1-16,17/18,19/20)		
	P110	**V6225300**	Knob	GREEN/M-GRAY		EMX5000-12 HIGH(CH1-12),MID-f(CH1-8)	38	01 01
	P120	**V6225400**	Knob	BLUE/M-GRAY		MID(CH1-12),LOW(CH1-12) EMX5000-20 AUX1-2(CH1-16,17/18,19/20, EFFECT1 RTN,EFFECT2 RTN, ST SUB IN1,ST SUB IN2)	44	01
	P120	**V6225400**	Knob	BLUE/M-GRAY		EMX5000-12 AUX1-2(CH1-12,EFFECT1 RTN, EFFECT2 RTN,ST SUB IN1/ST SUB IN2)	28	01 01
	P130	**V6225500**	Knob	RED/M-GRAY		EMX5000-20 IN1	22	01
						PAN(CH1-16,17/18,19/20), ST(ST SUB IN1,ST SUB IN2, 2TR IN),ST SU OUT		
	P130	**V6225500**	Knob	RED/M-GRAY		EMX5000-12	14	01
						PAN(CH1-12),ST(ST SUB IN1 /ST SUB IN2/2TR IN),ST SU OUT		
	P140	**V6225700**	Knob	L-GRAY/D-GRAY		PROGRAM(EFFCT1,EFFCT2)	2	01
	P150	**V2947000**	Fader Knob	BLACK/N-GRAY		EMX5000-20 FADER(CH1-20)	18	01
	P150	**V2947000**	Fader Knob	BLACK/N-GRAY		EMX5000-12 FADER(CH1-12)	10	01
	P160	**V6623300**	Fader Knob	D-RED/CD-GRAY		FADER(EFFECT1 RTN,EFFECT2 RTN,AUX1,AUX2)	4	01
	P170	**V7369500**	Fader Knob	N-GRAY/BLACK		FADER(MONO OUT)		01
	P180	**V6623400**	Fader Knob	N-GRAY/D-RED		FADER(ST OUT)		01
	P190	**--**	Label			(V385110)		
*	P210	**AAX33240**	Circuit Board	DSP-SPX		(V826730,X2259A0)		
	P220	**EP600230**	Bind Head Tapping Screw-B	3.0X6 MFZN2BL			4	01
*	P230	**V8273100**	Mute Guard					
	P240	**VZ765100**	Cord Binder	TS-0708 KSS				02
			ACCESSORIES			EMX5000-20/12		
⚠		**V7240300**	AC Cord	J VCTF 0.75X3		J		
⚠		**V6284300**	AC Cord	UC SJT#18X3		U,V		05
⚠		**V6284400**	AC Cord	E H05VV-FX3 0.75		H,W,B,K		06
⚠		**V6283900**	AC Cord	BS H05VV-F3X0.75		B		08

✻: New Parts

RANK: Japan only

ELECTRICAL PARTS

	REF NO.	PART NO.	DESCRIPTION			REMARKS	QTY	RANK
			ELECTORICAL PARTS					
*		AAX33240	Circuit Board	DSP-SPX PRESTO		(V826730,X2259B0)		
*		V8267400	Circuit Board	IN8		(X0655B0)		
*		V9093100	Cirsuit Board	IN16		EMX5000-20 (X0655B0)		
*		V8267500	Circuit Board	MAS		(X0656B0)		
*		V8269600	Circuit Board	PWR		(X0626B0)		
*		AAX33190	Circuit Board	SMPS 1/2		J (V826930,X0627B0)		
*		AAX33200	Circuit Board	SMPS 1/2		U,V (V826940,X0627B0)		
*		AAX33210	Circuit Board	SMPS 1/2		H,B,W,K (V826950,X0627B0)		
*		AAX71680	Circuit Board	SMPS 1/2		A (X848520,X0627B0)		
*		AAX74520	Circuit Board	SMPS 2/2		J (V826930,X0627B0)		
*		AAX74530	Circuit Board	SMPS 2/2		U,V (V826940,X0627B0)		
*		AAX33230	Circuit Board	SMPS 2/2		H,B,W,K (V826950,X0627B0)		
*		AAX33250	Circuit Board	SMPS 2/2		A (V848520,X0627B0)		
*		AAX33240	Circuit Board	DSP-SPX		(V826730,X2259B0)		
	C101	UX145100	Ceramic Capacitor (Chip)	0.1000 25V Z				01
	C102	UX145100	Ceramic Capacitor (Chip)	0.1000 25V Z				01
	C103	UR847470	Electrolytic Cap.	47.00 25.0V				01
	C104	UX145100	Ceramic Capacitor (Chip)	0.1000 25V Z				01
	-108	UX145100	Ceramic Capacitor (Chip)	0.1000 25V Z				01
	C109	UA954470	Mylar Capacitor	0.0470 50V J				01
	C110	UR847470	Electrolytic Cap.	47.00 25.0V				01
	C111	UR847470	Electrolytic Cap.	47.00 25.0V				01
	C113	UR838100	Electrolytic Cap.	100.00 16.0V				01
	C114	UR838100	Electrolytic Cap.	100.00 16.0V				01
	C116	UX145100	Ceramic Capacitor (Chip)	0.1000 25V Z				01
	C117	UX145100	Ceramic Capacitor (Chip)	0.1000 25V Z				01
	C119	UX145100	Ceramic Capacitor (Chip)	0.1000 25V Z				01
	C120	UX062100	Ceramic Capacitor (Chip)	100P 50V J				01
	C121	UX064100	Ceramic Capacitor (Chip)	0.0100 50V K				01
	C122	UX064100	Ceramic Capacitor (Chip)	0.0100 50V K				01
	-135	UX064100	Ceramic Capacitor (Chip)	0.0100 50V K				01
	C136	UR847100	Electrolytic Cap.	10.00 25.0V				01
	C137	UX145100	Ceramic Capacitor (Chip)	0.1000 25V Z				01
	C138	UX061220	Ceramic Capacitor (Chip)	22P 50V J				01
	C139	UX061220	Ceramic Capacitor (Chip)	22P 50V J				01
	C140	UR847100	Electrolytic Cap.	10.00 25.0V				01
	-143	UR847100	Electrolytic Cap.	10.00 25.0V				01
	C144	UX062100	Ceramic Capacitor (Chip)	100P 50V J				01
	C145	UX145100	Ceramic Capacitor (Chip)	0.1000 25V Z				01
	C146	UX062100	Ceramic Capacitor (Chip)	100P 50V J				01
	C147	UX145100	Ceramic Capacitor (Chip)	0.1000 25V Z				01
	C148	UX062100	Ceramic Capacitor (Chip)	100P 50V J				01
	C149	UX062100	Ceramic Capacitor (Chip)	100P 50V J				01
	C150	UA953150	Mylar Capacitor	1500P 50V J				01
	C151	UA953150	Mylar Capacitor	1500P 50V J				01
	C152	UR866100	Electrolytic Cap.	1.00 50.0V				01
	C153	UR847470	Electrolytic Cap.	47.00 25.0V				01
	C154	UR847470	Electrolytic Cap.	47.00 25.0V				01
	C155	UX061470	Ceramic Capacitor (Chip)	47P 50V J				
	C156	UX061470	Ceramic Capacitor (Chip)	47P 50V J				
	C157	UX062100	Ceramic Capacitor (Chip)	100P 50V J				01
	C158	UX062100	Ceramic Capacitor (Chip)	100P 50V J				01
	C159	UR847100	Electrolytic Cap.	10.00 25.0V				01
	-161	UR847100	Electrolytic Cap.	10.00 25.0V				01
	C162	UX145100	Ceramic Capacitor (Chip)	0.1000 25V Z				01
	-164	UX145100	Ceramic Capacitor (Chip)	0.1000 25V Z				01
	C165	UR847100	Electrolytic Cap.	10.00 25.0V				01
	C166	UR847100	Electrolytic Cap.	10.00 25.0V				01
	C167	UX145100	Ceramic Capacitor (Chip)	0.1000 25V Z				01
	-169	UX145100	Ceramic Capacitor (Chip)	0.1000 25V Z				01
	C170	UR838100	Electrolytic Cap.	100.00 16.0V				01
	C171	UX145100	Ceramic Capacitor (Chip)	0.1000 25V Z				01
	-174	UX145100	Ceramic Capacitor (Chip)	0.1000 25V Z				01
	C175	UR838100	Electrolytic Cap.	100.00 16.0V				01
	C176	UX145100	Ceramic Capacitor (Chip)	0.1000 25V Z				01
	-185	UX145100	Ceramic Capacitor (Chip)	0.1000 25V Z				01
	C187	UX145100	Ceramic Capacitor (Chip)	0.1000 25V Z				01
	C188	UX145100	Ceramic Capacitor (Chip)	0.1000 25V Z				01

*: New Parts

RANK: Japan only

	REF NO.	PART NO.	DESCRIPTION			REMARKS	QTY	RANK
	C189	**UR838100**	Electrolytic Cap.	100.00 16.0V				01
	C190	**UX145100**	Ceramic Capacitor (Chip)	0.1000 25V Z				01
	-200	**UX145100**	Ceramic Capacitor (Chip)	0.1000 25V Z				01
	C201	**UX063100**	Ceramic Capacitor (Chip)	1000P 50V K				01
	C202	**UX063100**	Ceramic Capacitor (Chip)	1000P 50V K				01
	C203	**UR866100**	Electrolytic Cap.	1.00 50.0V				01
	C204	**UR866100**	Electrolytic Cap.	1.00 50.0V				01
	C205	**UR847100**	Electrolytic Cap.	10.00 25.0V				01
	C206	**UR847100**	Electrolytic Cap.	10.00 25.0V				01
	C301	**UX064100**	Ceramic Capacitor (Chip)	0.0100 50V K				01
	-309	**UX145100**	Ceramic Capacitor (Chip)	0.1000 25V Z				01
	C340	**UR847100**	Electrolytic Cap.	10.00 25.0V				01
	-343	**UR847100**	Electrolytic Cap.	10.00 25.0V				01
	C344	**UX062100**	Ceramic Capacitor (Chip)	100P 50V J				01
	C345	**UX145100**	Ceramic Capacitor (Chip)	0.1000 25V Z				01
	C346	**UX062100**	Ceramic Capacitor (Chip)	100P 50V J				01
	C347	**UX145100**	Ceramic Capacitor (Chip)	0.1000 25V Z				01
	C348	**UX062100**	Ceramic Capacitor (Chip)	100P 50V J				01
	C349	**UX062100**	Ceramic Capacitor (Chip)	100P 50V J				01
	C350	**UA953150**	Mylar Capacitor	1500P 50V J				01
	C351	**UA953150**	Mylar Capacitor	1500P 50V J				01
	C353	**UR847470**	Electrolytic Cap.	47.00 25.0V				01
	C354	**UR847470**	Electrolytic Cap.	47.00 25.0V				01
	C355	**UX061470**	Ceramic Capacitor (Chip)	47P 50V J				
	C356	**UX061470**	Ceramic Capacitor (Chip)	47P 50V J				
	C357	**UX062100**	Ceramic Capacitor (Chip)	100P 50V J				01
	C358	**UX062100**	Ceramic Capacitor (Chip)	100P 50V J				01
	C359	**UR847100**	Electrolytic Cap.	10.00 25.0V				01
	-361	**UR847100**	Electrolytic Cap.	10.00 25.0V				01
	C362	**UX145100**	Ceramic Capacitor (Chip)	0.1000 25V Z				01
	-364	**UX145100**	Ceramic Capacitor (Chip)	0.1000 25V Z				01
	C365	**UR847100**	Electrolytic Cap.	10.00 25.0V				01
	C366	**UR847100**	Electrolytic Cap.	10.00 25.0V				01
	C367	**UX145100**	Ceramic Capacitor (Chip)	0.1000 25V Z				01
	CN101	**VQ046400**	Connector , FFC	52044 35P SE				01
	CN104	**VV066500**	Connector Base Post	M2426XX 5P TE				01
	EM101	**VV056900**	Noise Filter	ZJSR5101-223TA				01
	-105	**VV056900**	Noise Filter	ZJSR5101-223TA				01
	IC101	**XU965A00**	IC	UPC29M33T-E1		RAGULATOR +3.3V		03
	IC102	**XY650A00**	IC	PST595CMT		SYSTEM RESET		03
	IC103	**XG948E00**	IC	YM3436DK		DIR2		11
	IC104	**XZ110A00**	IC	74HCU04DT		INVERTER		01
	IC105	**XJ553A00**	IC	NJM2068MD-T1		OP AMP		02
	-107	**XJ553A00**	IC	NJM2068MD-T1		OP AMP		02
	IC108	**XW008A00**	IC	AK4522VF-E2		CONVERTER		07
*	IC109	**X2416A00**	IC	M30622MCA-XXXFP		CPU		08
	IC110	**XT160A00**	IC	93LC56T-I/SN		EP-ROM 2K		03
	IC111	**XZ108A00**	IC	74HC08DT		AND		01
	IC112	**XV988A00**	IC	YSS910-S		DSP6		10
	IC113	**XT810B00**	IC	MSM514260E-60TS-K		ROM 4M		07
	IC114	**XT810B00**	IC	MSM514260E-60TS-K		ROM 4M		07
	IC305	**XJ553A00**	IC	NJM2068MD-T1		OP AMP		02
	-307	**XJ553A00**	IC	NJM2068MD-T1		OP AMP		02
	IC308	**XW008A00**	IC	AK4522VF-E2		CONVERTER		07
	L101	**GE300670**	Ferrite Bead	BL02RN2-R62T4				02
	-107	**GE300670**	Ferrite Bead	BL02RN2-R62T4				02
	L110	**V3063400**	Chip Inductance	BLM18BD601SN1D				01
	-140	**V3063400**	Chip Inductance	BLM18BD601SN1D				01
	L302	**GE300670**	Ferrite Bead	BL02RN2-R62T4				02
	L330	**V3063400**	Chip Inductance	BLM18BD601SN1D				01
	-332	**V3063400**	Chip Inductance	BLM18BD601SN1D				01
	L339	**V3063400**	Chip Inductance	BLM18BD601SN1D				01
	L340	**V3063400**	Chip Inductance	BLM18BD601SN1D				01
	Q101	**VV655000**	Digital Transistor	DTA114EKA TP				01
	Q102	**VV655400**	Digital Transistor	DTC114EKA TP				01
	Q103	**VD303700**	Transistor	2SC3326 A,B TE85R				01
	Q104	**VD303700**	Transistor	2SC3326 A,B TE85R				01
	Q105	**VV655000**	Digital Transistor	DTA114EKA TP				01
	-107	**VV655000**	Digital Transistor	DTA114EKA TP				01
	Q303	**VD303700**	Transistor	2SC3326 A,B TE85R				01

*: New Parts

RANK: Japan only

	REF NO.	PART NO.	DESCRIPTION			REMARKS	QTY	RANK
	Q304	**VD303700**	Transistor	2SC3326 A,B TE85R				01
	R101	**RG000000**	Carbon Resistor (chip)	0 0.1 J				
	R102	**RG000000**	Carbon Resistor (chip)	0 0.1 J				
	R107	**RG006330**	Carbon Resistor (chip)	3.3K 0.1 J				
	R108	**RG005470**	Carbon Resistor (chip)	470 0.1 J				
	R109	**RG005100**	Carbon Resistor (chip)	100 0.1 J				
	R111	**RG009100**	Carbon Resistor (chip)	1.0M 0.1 J				
	R112	**RG007100**	Carbon Resistor (chip)	10K 0.1 J				
	-124	**RG007100**	Carbon Resistor (chip)	10K 0.1 J				
	R125	**RG006100**	Carbon Resistor (chip)	1.0K 0.1 J				
	-134	**RG006100**	Carbon Resistor (chip)	1.0K 0.1 J				
	R135	**RG004100**	Carbon Resistor (chip)	10 0.1 J				
	R136	**RG006100**	Carbon Resistor (chip)	1.0K 0.1 J				
	-139	**RG006100**	Carbon Resistor (chip)	1.0K 0.1 J				
	R141	**RG009100**	Carbon Resistor (chip)	1.0M 0.1 J				
	R142	**RG005100**	Carbon Resistor (chip)	100 0.1 J				
	R143	**RG007220**	Carbon Resistor (chip)	22K 0.1 J				
	R144	**RG007220**	Carbon Resistor (chip)	22K 0.1 J				
	R145	**RG006470**	Carbon Resistor (chip)	4.7K 0.1 J				
	R146	**RG004330**	Carbon Resistor (chip)	33 0.1 J				
	R147	**RG006470**	Carbon Resistor (chip)	4.7K 0.1 J				
	R148	**RG006470**	Carbon Resistor (chip)	4.7K 0.1 J				
	R149	**RG004330**	Carbon Resistor (chip)	33 0.1 J				
	R150	**RG006470**	Carbon Resistor (chip)	4.7K 0.1 J				
	R151	**RG006330**	Carbon Resistor (chip)	3.3K 0.1 J				
	R152	**RG006330**	Carbon Resistor (chip)	3.3K 0.1 J				
	R153	**RG006470**	Carbon Resistor (chip)	4.7K 0.1 J				
	-156	**RG006470**	Carbon Resistor (chip)	4.7K 0.1 J				
*	R157	**RG005330**	Carbon Resistor (chip)	330 0.1 J				
*	-160	**RG005330**	Carbon Resistor (chip)	330 0.1 J				
	R161	**RG007100**	Carbon Resistor (chip)	10K 0.1 J				
	R162	**RG007100**	Carbon Resistor (chip)	10K 0.1 J				
	R163	**RG008100**	Carbon Resistor (chip)	100K 0.1 J				
	-166	**RG008100**	Carbon Resistor (chip)	100K 0.1 J				
	R167	**RG006100**	Carbon Resistor (chip)	1.0K 0.1 J				
	-169	**RG006100**	Carbon Resistor (chip)	1.0K 0.1 J				
	R170	**RG007100**	Carbon Resistor (chip)	10K 0.1 J				
	R171	**RG007100**	Carbon Resistor (chip)	10K 0.1 J				
*	R172	**RG006120**	Carbon Resistor (chip)	1.2K 0.1 J				
*	R173	**RG006120**	Carbon Resistor (chip)	1.2K 0.1 J				
	R174	**RG007100**	Carbon Resistor (chip)	10K 0.1 J				
*	R175	**RG006120**	Carbon Resistor (chip)	1.2K 0.1 J				
*	R176	**RG006120**	Carbon Resistor (chip)	1.2K 0.1 J				
	R178	**RG203470**	Carbon Resistor (chip)	4.7 1/4 J				
	R179	**RG007100**	Carbon Resistor (chip)	10K 0.1 J				
	-181	**RG007100**	Carbon Resistor (chip)	10K 0.1 J				
	R183	**RG007100**	Carbon Resistor (chip)	10K 0.1 J				
	R186	**RG006560**	Carbon Resistor (chip)	5.6K 0.1 J				
	R187	**RG007100**	Carbon Resistor (chip)	10K 0.1 J				
	-189	**RG007100**	Carbon Resistor (chip)	10K 0.1 J				
	R190	**RG009100**	Carbon Resistor (chip)	1.0M 0.1 J				
	R191	**RG000000**	Carbon Resistor (chip)	0 0.1 J				
	R192	**RG007100**	Carbon Resistor (chip)	10K 0.1 J				
	R193	**RG005100**	Carbon Resistor (chip)	100 0.1 J				
	R194	**RG005100**	Carbon Resistor (chip)	100 0.1 J				
	R195	**RG007100**	Carbon Resistor (chip)	10K 0.1 J				
	R196	**RG005100**	Carbon Resistor (chip)	100 0.1 J				
	R201	**RG007100**	Carbon Resistor (chip)	10K 0.1 J				
	-234	**RG007100**	Carbon Resistor (chip)	10K 0.1 J				
	R237	**RG000000**	Carbon Resistor (chip)	0 0.1 J				
	R301	**RG007100**	Carbon Resistor (chip)	10K 0.1 J				
	R302	**RG004100**	Carbon Resistor (chip)	10 0.1 J				
	R303	**RG006100**	Carbon Resistor (chip)	1.0K 0.1 J				
	R304	**RG006100**	Carbon Resistor (chip)	1.0K 0.1 J				
	R305	**RG000000**	Carbon Resistor (chip)	0 0.1 J				
	-308	**RG000000**	Carbon Resistor (chip)	0 0.1 J				
	R343	**RG007220**	Carbon Resistor (chip)	22K 0.1 J				
	R344	**RG007220**	Carbon Resistor (chip)	22K 0.1 J				
	R345	**RG006470**	Carbon Resistor (chip)	4.7K 0.1 J				
	R346	**RG004330**	Carbon Resistor (chip)	33 0.1 J				

*: New Parts

RANK: Japan only

	REF NO.	PART NO.	DESCRIPTION			REMARKS	QTY	RANK
	R347	**RG006470**	Carbon Resistor (chip)	4.7K 0.1 J				
	R348	**RG006470**	Carbon Resistor (chip)	4.7K 0.1 J				
	R349	**RG004330**	Carbon Resistor (chip)	33 0.1 J				
	R350	**RG006470**	Carbon Resistor (chip)	4.7K 0.1 J				
	R351	**RG006330**	Carbon Resistor (chip)	3.3K 0.1 J				
	R352	**RG006330**	Carbon Resistor (chip)	3.3K 0.1 J				
	R353	**RG006470**	Carbon Resistor (chip)	4.7K 0.1 J				
	-356	**RG006470**	Carbon Resistor (chip)	4.7K 0.1 J				
*	R357	**RG005330**	Carbon Resistor (chip)	330 0.1 J				
*	-360	**RG005330**	Carbon Resistor (chip)	330 0.1 J				
	R361	**RG007100**	Carbon Resistor (chip)	10K 0.1 J				
	R362	**RG007100**	Carbon Resistor (chip)	10K 0.1 J				
	R363	**RG008100**	Carbon Resistor (chip)	100K 0.1 J				
	-366	**RG008100**	Carbon Resistor (chip)	100K 0.1 J				
	R368	**RG006100**	Carbon Resistor (chip)	1.0K 0.1 J				
	R369	**RG006100**	Carbon Resistor (chip)	1.0K 0.1 J				
	R370	**RG007100**	Carbon Resistor (chip)	10K 0.1 J				
	R371	**RG007100**	Carbon Resistor (chip)	10K 0.1 J				
*	R372	**RG006120**	Carbon Resistor (chip)	1.2K 0.1 J				
*	R373	**RG006120**	Carbon Resistor (chip)	1.2K 0.1 J				
*	R375	**RG006120**	Carbon Resistor (chip)	1.2K 0.1 J				
*	R376	**RG006120**	Carbon Resistor (chip)	1.2K 0.1 J				
	R378	**RG203470**	Carbon Resistor (chip)	4.7 1/4 J				
	X101	**VY891500**	Quartz Crystal Unit	12.288 SMD-49				03
	X102	**V3811500**	Ceramic Resonator	16.00M CSTCV16.0				01
	X103	**V3743900**	Ceramic Resonator	30.00M CSTCV30M0				02
*		**V8267400**	Circuit Board	IN8		(X0655B0)		
		V4467500	Button	CD-GRAY/WHITE		PLF(CH1-8),AUX1(CH1-8),AU	40	01
						X2(CH1-8),GAIN 0dB(CH1-8)	40	01
						GAIN 26dB(CH1-8)	40	01
		VV307300	LED Spacer				25	01
		VZ968600	Button	NO.947 CD-GRAY		CH ON(CH1-8)	8	01
		--	Jumper Wire	0.60		(VV29140)	319	01
		--	Jumper Wire	0.60 TP		(V829020)	21	
	C101	**VV488800**	Electrolytic Cap.-LLM	10.00 50.0V				01
	C102	**VV488800**	Electrolytic Cap.-LLM	10.00 50.0V				01
	C103	**UR847100**	Electrolytic Cap.	10.00 25.0V				01
	C104	**UR847100**	Electrolytic Cap.	10.00 25.0V				01
*	C105	**UX062820**	Ceramic Capacitor (Chip)	820P 50V K				
*	-107	**UX062820**	Ceramic Capacitor (Chip)	820P 50V K				
	C108	**UX061100**	Ceramic Capacitor (Chip)	10P 50V D				01
	C109	**UR828470**	Electrolytic Cap.	470.00 10.0V				01
*	C110	**UX062820**	Ceramic Capacitor (Chip)	820P 50V K				
	C111	**UX061100**	Ceramic Capacitor (Chip)	10P 50V D				01
	C112	**UX062470**	Ceramic Capacitor (Chip)	470P 50V J				
	C113	**UX061330**	Ceramic Capacitor (Chip)	33P 50V J				
	C114	**UR847100**	Electrolytic Cap.	10.00 25.0V				01
	C115	**VZ597300**	Mylar Capacitor	0.091 50V J				01
	C116	**VZ597300**	Mylar Capacitor	0.091 50V J				01
	C117	**UX062100**	Ceramic Capacitor (Chip)	100P 50V J				01
	C118	**UR847100**	Electrolytic Cap.	10.00 25.0V				01
	C119	**UR847100**	Electrolytic Cap.	10.00 25.0V				01
	C120	**UA954390**	Mylar Capacitor	0.0390 50V J				01
	C121	**VV190000**	Mylar Capacitor	820P 50V J				01
	C122	**UX061470**	Ceramic Capacitor (Chip)	47P 50V J				
	C123	**UX062100**	Ceramic Capacitor (Chip)	100P 50V J				01
	C124	**UA953390**	Mylar Capacitor	3900P 50V J				01
	C125	**UX062100**	Ceramic Capacitor (Chip)	100P 50V J				01
	C126	**UA954100**	Mylar Capacitor	0.0100 50V J				01
	C127	**UX061220**	Ceramic Capacitor (Chip)	22P 50V J				01
	C128	**UR847470**	Electrolytic Cap.	47.00 25.0V				01
	C129	**UR847100**	Electrolytic Cap.	10.00 25.0V				01
	C130	**UX063100**	Ceramic Capacitor (Chip)	1000P 50V K				01
	C131	**UR866470**	Electrolytic Cap.	4.70 50.0V				01
	C132	**UX062100**	Ceramic Capacitor (Chip)	100P 50V J				01
	-134	**UX062100**	Ceramic Capacitor (Chip)	100P 50V J				01
	C135	**UR847470**	Electrolytic Cap.	47.00 25.0V				01
	C136	**UR866470**	Electrolytic Cap.	4.70 50.0V				01
	C137	**UR847100**	Electrolytic Cap.	10.00 25.0V				01

❇: New Parts

RANK: Japan only

	REF NO.	PART NO.	DESCRIPTION			REMARKS	QTY	RANK
	C138	**UX062100**	Ceramic Capacitor (Chip)	100P 50V J				01
	C139	**UX062100**	Ceramic Capacitor (Chip)	100P 50V J				01
	C140	**UX061470**	Ceramic Capacitor (Chip)	47P 50V J				
	C141	**UR847470**	Electrolytic Cap.	47.00 25.0V				01
	C142	**UR877100**	Electrolytic Cap.	10.00 63.0V				01
	C143	**UX064100**	Ceramic Capacitor (Chip)	0.0100 50V K				01
	-156	**UX064100**	Ceramic Capacitor (Chip)	0.0100 50V K				01
	C201	**VV488800**	Electrolytic Cap.-LLM	10.00 50.0V				01
	C202	**VV488800**	Electrolytic Cap.-LLM	10.00 50.0V				01
	C203	**UR847100**	Electrolytic Cap.	10.00 25.0V				01
	C204	**UR847100**	Electrolytic Cap.	10.00 25.0V				01
*	C205	**UX062820**	Ceramic Capacitor (Chip)	820P 50V K				
*	-207	**UX062820**	Ceramic Capacitor (Chip)	820P 50V K				
	C208	**UX061100**	Ceramic Capacitor (Chip)	10P 50V D				01
	C209	**UR828470**	Electrolytic Cap.	470.00 10.0V				01
*	C210	**UX062820**	Ceramic Capacitor (Chip)	820P 50V K				
	C211	**UX061100**	Ceramic Capacitor (Chip)	10P 50V D				01
	C212	**UX062470**	Ceramic Capacitor (Chip)	470P 50V J				
	C213	**UX061330**	Ceramic Capacitor (Chip)	33P 50V J				
	C214	**UR847100**	Electrolytic Cap.	10.00 25.0V				01
	C215	**VZ597300**	Mylar Capacitor	0.091 50V J				01
	C216	**VZ597300**	Mylar Capacitor	0.091 50V J				01
	C217	**UX062100**	Ceramic Capacitor (Chip)	100P 50V J				01
	C218	**UR847100**	Electrolytic Cap.	10.00 25.0V				01
	C219	**UR847100**	Electrolytic Cap.	10.00 25.0V				01
	C220	**UA954390**	Mylar Capacitor	0.0390 50V J				01
	C221	**VV190000**	Mylar Capacitor	820P 50V J				01
	C222	**UX061470**	Ceramic Capacitor (Chip)	47P 50V J				
	C223	**UX062100**	Ceramic Capacitor (Chip)	100P 50V J				01
	C224	**UA953390**	Mylar Capacitor	3900P 50V J				01
	C225	**UX062100**	Ceramic Capacitor (Chip)	100P 50V J				01
	C226	**UA954100**	Mylar Capacitor	0.0100 50V J				01
	C227	**UX061220**	Ceramic Capacitor (Chip)	22P 50V J				01
	C228	**UR847470**	Electrolytic Cap.	47.00 25.0V				01
	C229	**UR847100**	Electrolytic Cap.	10.00 25.0V				01
	C230	**UX063100**	Ceramic Capacitor (Chip)	1000P 50V K				01
	C231	**UR866470**	Electrolytic Cap.	4.70 50.0V				01
	C232	**UX062100**	Ceramic Capacitor (Chip)	100P 50V J				01
	-234	**UX062100**	Ceramic Capacitor (Chip)	100P 50V J				01
	C235	**UR847470**	Electrolytic Cap.	47.00 25.0V				01
	C236	**UR866470**	Electrolytic Cap.	4.70 50.0V				01
	C237	**UR847100**	Electrolytic Cap.	10.00 25.0V				01
	C238	**UX062100**	Ceramic Capacitor (Chip)	100P 50V J				01
	C239	**UX062100**	Ceramic Capacitor (Chip)	100P 50V J				01
	C240	**UX061470**	Ceramic Capacitor (Chip)	47P 50V J				
	C241	**UR847470**	Electrolytic Cap.	47.00 25.0V				01
	C242	**UX064100**	Ceramic Capacitor (Chip)	0.0100 50V K				01
	C243	**UX064100**	Ceramic Capacitor (Chip)	0.0100 50V K				01
	C301	**VV488800**	Electrolytic Cap.-LLM	10.00 50.0V				01
	C302	**VV488800**	Electrolytic Cap.-LLM	10.00 50.0V				01
	C303	**UR847100**	Electrolytic Cap.	10.00 25.0V				01
	C304	**UR847100**	Electrolytic Cap.	10.00 25.0V				01
*	C305	**UX062820**	Ceramic Capacitor (Chip)	820P 50V K				
*	-307	**UX062820**	Ceramic Capacitor (Chip)	820P 50V K				
	C308	**UX061100**	Ceramic Capacitor (Chip)	10P 50V D				01
	C309	**UR828470**	Electrolytic Cap.	470.00 10.0V				01
*	C310	**UX062820**	Ceramic Capacitor (Chip)	820P 50V K				
	C311	**UX061100**	Ceramic Capacitor (Chip)	10P 50V D				01
	C312	**UX062470**	Ceramic Capacitor (Chip)	470P 50V J				
	C313	**UX061330**	Ceramic Capacitor (Chip)	33P 50V J				
	C314	**UR847100**	Electrolytic Cap.	10.00 25.0V				01
	C315	**VZ597300**	Mylar Capacitor	0.091 50V J				01
	C316	**VZ597300**	Mylar Capacitor	0.091 50V J				01
	C317	**UX062100**	Ceramic Capacitor (Chip)	100P 50V J				01
	C318	**UR847100**	Electrolytic Cap.	10.00 25.0V				01
	C319	**UR847100**	Electrolytic Cap.	10.00 25.0V				01
	C320	**UA954390**	Mylar Capacitor	0.0390 50V J				01
	C321	**VV190000**	Mylar Capacitor	820P 50V J				01
	C322	**UX061470**	Ceramic Capacitor (Chip)	47P 50V J				
	C323	**UX062100**	Ceramic Capacitor (Chip)	100P 50V J				01

*: New Parts

RANK: Japan only

	REF NO.	PART NO.	DESCRIPTION			REMARKS	QTY	RANK
	C324	**UA953390**	Mylar Capacitor	3900P 50V J				01
	C325	**UX062100**	Ceramic Capacitor (Chip)	100P 50V J				01
	C326	**UA954100**	Mylar Capacitor	0.0100 50V J				01
	C327	**UX061220**	Ceramic Capacitor (Chip)	22P 50V J				01
	C328	**UR847470**	Electrolytic Cap.	47.00 25.0V				01
	C329	**UR847100**	Electrolytic Cap.	10.00 25.0V				01
	C330	**UX063100**	Ceramic Capacitor (Chip)	1000P 50V K				01
	C331	**UR866470**	Electrolytic Cap.	4.70 50.0V				01
	C332	**UX062100**	Ceramic Capacitor (Chip)	100P 50V J				01
	C333	**UX062100**	Ceramic Capacitor (Chip)	100P 50V J				01
	C334	**UX062100**	Ceramic Capacitor (Chip)	100P 50V J				01
	C335	**UR847470**	Electrolytic Cap.	47.00 25.0V				01
	C336	**UR866470**	Electrolytic Cap.	4.70 50.0V				01
	C337	**UR847100**	Electrolytic Cap.	10.00 25.0V				01
	C338	**UX062100**	Ceramic Capacitor (Chip)	100P 50V J				01
	C339	**UX062100**	Ceramic Capacitor (Chip)	100P 50V J				01
	C340	**UX061470**	Ceramic Capacitor (Chip)	47P 50V J				
	C341	**UR847470**	Electrolytic Cap.	47.00 25.0V				01
	C342	**UX064100**	Ceramic Capacitor (Chip)	0.0100 50V K				01
	-355	**UX064100**	Ceramic Capacitor (Chip)	0.0100 50V K				01
	C401	**VV488800**	Electrolytic Cap.-LLM	10.00 50.0V				01
	C402	**VV488800**	Electrolytic Cap.-LLM	10.00 50.0V				01
	C403	**UR847100**	Electrolytic Cap.	10.00 25.0V				01
	C404	**UR847100**	Electrolytic Cap.	10.00 25.0V				01
*	C405	**UX062820**	Ceramic Capacitor (Chip)	820P 50V K				
*	-407	**UX062820**	Ceramic Capacitor (Chip)	820P 50V K				
	C408	**UX061100**	Ceramic Capacitor (Chip)	10P 50V D				01
	C409	**UR828470**	Electrolytic Cap.	470.00 10.0V				01
*	C410	**UX062820**	Ceramic Capacitor (Chip)	820P 50V K				
	C411	**UX061100**	Ceramic Capacitor (Chip)	10P 50V D				01
	C412	**UX062470**	Ceramic Capacitor (Chip)	470P 50V J				
	C413	**UX061330**	Ceramic Capacitor (Chip)	33P 50V J				
	C414	**UR847100**	Electrolytic Cap.	10.00 25.0V				01
	C415	**VZ597300**	Mylar Capacitor	0.091 50V J				01
	C416	**VZ597300**	Mylar Capacitor	0.091 50V J				01
	C417	**UX062100**	Ceramic Capacitor (Chip)	100P 50V J				01
	C418	**UR847100**	Electrolytic Cap.	10.00 25.0V				01
	C419	**UR847100**	Electrolytic Cap.	10.00 25.0V				01
	C420	**UA954390**	Mylar Capacitor	0.0390 50V J				01
	C421	**VV190000**	Mylar Capacitor	820P 50V J				01
	C422	**UX061470**	Ceramic Capacitor (Chip)	47P 50V J				
	C423	**UX062100**	Ceramic Capacitor (Chip)	100P 50V J				01
	C424	**UA953390**	Mylar Capacitor	3900P 50V J				01
	C425	**UX062100**	Ceramic Capacitor (Chip)	100P 50V J				01
	C426	**UA954100**	Mylar Capacitor	0.0100 50V J				01
	C427	**UX061220**	Ceramic Capacitor (Chip)	22P 50V J				01
	C428	**UR847470**	Electrolytic Cap.	47.00 25.0V				01
	C429	**UR847100**	Electrolytic Cap.	10.00 25.0V				01
	C430	**UX063100**	Ceramic Capacitor (Chip)	1000P 50V K				01
	C431	**UR866470**	Electrolytic Cap.	4.70 50.0V				01
	C432	**UX062100**	Ceramic Capacitor (Chip)	100P 50V J				01
	C433	**UX062100**	Ceramic Capacitor (Chip)	100P 50V J				01
	C434	**UX062100**	Ceramic Capacitor (Chip)	100P 50V J				01
	C435	**UR847470**	Electrolytic Cap.	47.00 25.0V				01
	C436	**UR866470**	Electrolytic Cap.	4.70 50.0V				01
	C437	**UR847100**	Electrolytic Cap.	10.00 25.0V				01
	C438	**UX062100**	Ceramic Capacitor (Chip)	100P 50V J				01
	C439	**UX062100**	Ceramic Capacitor (Chip)	100P 50V J				01
	C440	**UX061470**	Ceramic Capacitor (Chip)	47P 50V J				
	C441	**UR847470**	Electrolytic Cap.	47.00 25.0V				01
	C442	**UX064100**	Ceramic Capacitor (Chip)	0.0100 50V K				01
	C443	**UX064100**	Ceramic Capacitor (Chip)	0.0100 50V K				01
	C501	**VV488800**	Electrolytic Cap.-LLM	10.00 50.0V				01
	C502	**VV488800**	Electrolytic Cap.-LLM	10.00 50.0V				01
	C503	**UR847100**	Electrolytic Cap.	10.00 25.0V				01
	C504	**UR847100**	Electrolytic Cap.	10.00 25.0V				01
*	C505	**UX062820**	Ceramic Capacitor (Chip)	820P 50V K				
*	-507	**UX062820**	Ceramic Capacitor (Chip)	820P 50V K				
	C508	**UX061100**	Ceramic Capacitor (Chip)	10P 50V D				01
	C509	**UR828470**	Electrolytic Cap.	470.00 10.0V				01

✻: New Parts

RANK: Japan only

	REF NO.	PART NO.	DESCRIPTION			REMARKS	QTY	RANK
*	C510	**UX062820**	Ceramic Capacitor (Chip)	820P 50V K				
	C511	**UX061100**	Ceramic Capacitor (Chip)	10P 50V D				01
	C512	**UX062470**	Ceramic Capacitor (Chip)	470P 50V J				
	C513	**UX061330**	Ceramic Capacitor (Chip)	33P 50V J				
	C514	**UR847100**	Electrolytic Cap.	10.00 25.0V				01
	C515	**VZ597300**	Mylar Capacitor	0.091 50V J				01
	C516	**VZ597300**	Mylar Capacitor	0.091 50V J				01
	C517	**UX062100**	Ceramic Capacitor (Chip)	100P 50V J				01
	C518	**UR847100**	Electrolytic Cap.	10.00 25.0V				01
	C519	**UR847100**	Electrolytic Cap.	10.00 25.0V				01
	C520	**UA954390**	Mylar Capacitor	0.0390 50V J				01
	C521	**VV190000**	Mylar Capacitor	820P 50V J				01
	C522	**UX061470**	Ceramic Capacitor (Chip)	47P 50V J				
	C523	**UX062100**	Ceramic Capacitor (Chip)	100P 50V J				01
	C524	**UA953390**	Mylar Capacitor	3900P 50V J				01
	C525	**UX062100**	Ceramic Capacitor (Chip)	100P 50V J				01
	C526	**UA954100**	Mylar Capacitor	0.0100 50V J				01
	C527	**UX061220**	Ceramic Capacitor (Chip)	22P 50V J				01
	C528	**UR847470**	Electrolytic Cap.	47.00 25.0V				01
	C529	**UR847100**	Electrolytic Cap.	10.00 25.0V				01
	C530	**UX063100**	Ceramic Capacitor (Chip)	1000P 50V K				01
	C531	**UR866470**	Electrolytic Cap.	4.70 50.0V				01
	C532	**UX062100**	Ceramic Capacitor (Chip)	100P 50V J				01
	C533	**UX062100**	Ceramic Capacitor (Chip)	100P 50V J				01
	C534	**UX062100**	Ceramic Capacitor (Chip)	100P 50V J				01
	C535	**UR847470**	Electrolytic Cap.	47.00 25.0V				01
	C536	**UR866470**	Electrolytic Cap.	4.70 50.0V				01
	C537	**UR847100**	Electrolytic Cap.	10.00 25.0V				01
	C538	**UX062100**	Ceramic Capacitor (Chip)	100P 50V J				01
	C539	**UX062100**	Ceramic Capacitor (Chip)	100P 50V J				01
	C540	**UX061470**	Ceramic Capacitor (Chip)	47P 50V J				
	C541	**UR847470**	Electrolytic Cap.	47.00 25.0V				01
	C542	**UR877100**	Electrolytic Cap.	10.00 63.0V				01
	C543	**UX064100**	Ceramic Capacitor (Chip)	0.0100 50V K				01
	-556	**UX064100**	Ceramic Capacitor (Chip)	0.0100 50V K				01
	C601	**VV488800**	Electrolytic Cap.-LLM	10.00 50.0V				01
	C602	**VV488800**	Electrolytic Cap.-LLM	10.00 50.0V				01
	C603	**UR847100**	Electrolytic Cap.	10.00 25.0V				01
	C604	**UR847100**	Electrolytic Cap.	10.00 25.0V				01
*	C605	**UX062820**	Ceramic Capacitor (Chip)	820P 50V K				
*	-607	**UX062820**	Ceramic Capacitor (Chip)	820P 50V K				
	C608	**UX061100**	Ceramic Capacitor (Chip)	10P 50V D				01
	C609	**UR828470**	Electrolytic Cap.	470.00 10.0V				01
*	C610	**UX062820**	Ceramic Capacitor (Chip)	820P 50V K				
	C611	**UX061100**	Ceramic Capacitor (Chip)	10P 50V D				01
	C612	**UX062470**	Ceramic Capacitor (Chip)	470P 50V J				
	C613	**UX061330**	Ceramic Capacitor (Chip)	33P 50V J				
	C614	**UR847100**	Electrolytic Cap.	10.00 25.0V				01
	C615	**VZ597300**	Mylar Capacitor	0.091 50V J				01
	C616	**VZ597300**	Mylar Capacitor	0.091 50V J				01
	C617	**UX062100**	Ceramic Capacitor (Chip)	100P 50V J				01
	C618	**UR847100**	Electrolytic Cap.	10.00 25.0V				01
	C619	**UR847100**	Electrolytic Cap.	10.00 25.0V				01
	C620	**UA954390**	Mylar Capacitor	0.0390 50V J				01
	C621	**VV190000**	Mylar Capacitor	820P 50V J				01
	C622	**UX061470**	Ceramic Capacitor (Chip)	47P 50V J				
	C623	**UX062100**	Ceramic Capacitor (Chip)	100P 50V J				01
	C624	**UA953390**	Mylar Capacitor	3900P 50V J				01
	C625	**UX062100**	Ceramic Capacitor (Chip)	100P 50V J				01
	C626	**UA954100**	Mylar Capacitor	0.0100 50V J				01
	C627	**UX061220**	Ceramic Capacitor (Chip)	22P 50V J				01
	C628	**UR847470**	Electrolytic Cap.	47.00 25.0V				01
	C629	**UR847100**	Electrolytic Cap.	10.00 25.0V				01
	C630	**UX063100**	Ceramic Capacitor (Chip)	1000P 50V K				01
	C631	**UR866470**	Electrolytic Cap.	4.70 50.0V				01
	C632	**UX062100**	Ceramic Capacitor (Chip)	100P 50V J				01
	-634	**UX062100**	Ceramic Capacitor (Chip)	100P 50V J				01
	C635	**UR847470**	Electrolytic Cap.	47.00 25.0V				01
	C636	**UR866470**	Electrolytic Cap.	4.70 50.0V				01
	C637	**UR847100**	Electrolytic Cap.	10.00 25.0V				01

*: New Parts

RANK: Japan only

	REF NO.	PART NO.	DESCRIPTION			REMARKS	QTY	RANK
	C638	**UX062100**	Ceramic Capacitor (Chip)	100P 50V J				01
	C639	**UX062100**	Ceramic Capacitor (Chip)	100P 50V J				01
	C640	**UX061470**	Ceramic Capacitor (Chip)	47P 50V J				
	C641	**UR847470**	Electrolytic Cap.	47.00 25.0V				01
	C642	**UX064100**	Ceramic Capacitor (Chip)	0.0100 50V K				01
	C643	**UX064100**	Ceramic Capacitor (Chip)	0.0100 50V K				01
	C701	**VV488800**	Electrolytic Cap.-LLM	10.00 50.0V				01
	C702	**VV488800**	Electrolytic Cap.-LLM	10.00 50.0V				01
	C703	**UR847100**	Electrolytic Cap.	10.00 25.0V				01
	C704	**UR847100**	Electrolytic Cap.	10.00 25.0V				01
*	C705	**UX062820**	Ceramic Capacitor (Chip)	820P 50V K				
*	C706	**UX062820**	Ceramic Capacitor (Chip)	820P 50V K				
*	C707	**UX062820**	Ceramic Capacitor (Chip)	820P 50V K				
	C708	**UX061100**	Ceramic Capacitor (Chip)	10P 50V D				01
	C709	**UR828470**	Electrolytic Cap.	470.00 10.0V				01
*	C710	**UX062820**	Ceramic Capacitor (Chip)	820P 50V K				
	C711	**UX061100**	Ceramic Capacitor (Chip)	10P 50V D				01
	C712	**UX062470**	Ceramic Capacitor (Chip)	470P 50V J				
	C713	**UX061330**	Ceramic Capacitor (Chip)	33P 50V J				
	C714	**UR847100**	Electrolytic Cap.	10.00 25.0V				01
	C715	**VZ597300**	Mylar Capacitor	0.091 50V J				01
	C716	**VZ597300**	Mylar Capacitor	0.091 50V J				01
	C717	**UX062100**	Ceramic Capacitor (Chip)	100P 50V J				01
	C718	**UR847100**	Electrolytic Cap.	10.00 25.0V				01
	C719	**UR847100**	Electrolytic Cap.	10.00 25.0V				01
	C720	**UA954390**	Mylar Capacitor	0.0390 50V J				01
	C721	**VV190000**	Mylar Capacitor	820P 50V J				01
	C722	**UX061470**	Ceramic Capacitor (Chip)	47P 50V J				
	C723	**UX062100**	Ceramic Capacitor (Chip)	100P 50V J				01
	C724	**UA953390**	Mylar Capacitor	3900P 50V J				01
	C725	**UX062100**	Ceramic Capacitor (Chip)	100P 50V J				01
	C726	**UA954100**	Mylar Capacitor	0.0100 50V J				01
	C727	**UX061220**	Ceramic Capacitor (Chip)	22P 50V J				01
	C728	**UR847470**	Electrolytic Cap.	47.00 25.0V				01
	C729	**UR847100**	Electrolytic Cap.	10.00 25.0V				01
	C730	**UX063100**	Ceramic Capacitor (Chip)	1000P 50V K				01
	C731	**UR866470**	Electrolytic Cap.	4.70 50.0V				01
	C732	**UX062100**	Ceramic Capacitor (Chip)	100P 50V J				01
	-734	**UX062100**	Ceramic Capacitor (Chip)	100P 50V J				01
	C735	**UR847470**	Electrolytic Cap.	47.00 25.0V				01
	C736	**UR866470**	Electrolytic Cap.	4.70 50.0V				01
	C737	**UR847100**	Electrolytic Cap.	10.00 25.0V				01
	C738	**UX062100**	Ceramic Capacitor (Chip)	100P 50V J				01
	C739	**UX062100**	Ceramic Capacitor (Chip)	100P 50V J				01
	C740	**UX061470**	Ceramic Capacitor (Chip)	47P 50V J				
	C741	**UR847470**	Electrolytic Cap.	47.00 25.0V				01
	C742	**UX064100**	Ceramic Capacitor (Chip)	0.0100 50V K				01
	-755	**UX064100**	Ceramic Capacitor (Chip)	0.0100 50V K				01
	C801	**VV488800**	Electrolytic Cap.-LLM	10.00 50.0V				01
	C802	**VV488800**	Electrolytic Cap.-LLM	10.00 50.0V				01
	C803	**UR847100**	Electrolytic Cap.	10.00 25.0V				01
	C804	**UR847100**	Electrolytic Cap.	10.00 25.0V				01
*	C805	**UX062820**	Ceramic Capacitor (Chip)	820P 50V K				
*	-807	**UX062820**	Ceramic Capacitor (Chip)	820P 50V K				
	C808	**UX061100**	Ceramic Capacitor (Chip)	10P 50V D				01
	C809	**UR828470**	Electrolytic Cap.	470.00 10.0V				01
*	C810	**UX062820**	Ceramic Capacitor (Chip)	820P 50V K				
	C811	**UX061100**	Ceramic Capacitor (Chip)	10P 50V D				01
	C812	**UX062470**	Ceramic Capacitor (Chip)	470P 50V J				
	C813	**UX061330**	Ceramic Capacitor (Chip)	33P 50V J				
	C814	**UR847100**	Electrolytic Cap.	10.00 25.0V				01
	C815	**VZ597300**	Mylar Capacitor	0.091 50V J				01
	C816	**VZ597300**	Mylar Capacitor	0.091 50V J				01
	C817	**UX062100**	Ceramic Capacitor (Chip)	100P 50V J				01
	C818	**UR847100**	Electrolytic Cap.	10.00 25.0V				01
	C819	**UR847100**	Electrolytic Cap.	10.00 25.0V				01
	C820	**UA954390**	Mylar Capacitor	0.0390 50V J				01
	C821	**VV190000**	Mylar Capacitor	820P 50V J				01
	C822	**UX061470**	Ceramic Capacitor (Chip)	47P 50V J				
	C823	**UX062100**	Ceramic Capacitor (Chip)	100P 50V J				01

*: New Parts

RANK: Japan only

REF NO.	PART NO.	DESCRIPTION			REMARKS	QTY	RANK
C824	**UA953390**	Mylar Capacitor	3900P 50V J				01
C825	**UX062100**	Ceramic Capacitor (Chip)	100P 50V J				01
C826	**UA954100**	Mylar Capacitor	0.0100 50V J				01
C827	**UX061220**	Ceramic Capacitor (Chip)	22P 50V J				01
C828	**UR847470**	Electrolytic Cap.	47.00 25.0V				01
C829	**UR847100**	Electrolytic Cap.	10.00 25.0V				01
C830	**UX063100**	Ceramic Capacitor (Chip)	1000P 50V K				01
C831	**UR866470**	Electrolytic Cap.	4.70 50.0V				01
C832	**UX062100**	Ceramic Capacitor (Chip)	100P 50V J				01
-834	**UX062100**	Ceramic Capacitor (Chip)	100P 50V J				01
C835	**UR847470**	Electrolytic Cap.	47.00 25.0V				01
C836	**UR866470**	Electrolytic Cap.	4.70 50.0V				01
C837	**UR847100**	Electrolytic Cap.	10.00 25.0V				01
C838	**UX062100**	Ceramic Capacitor (Chip)	100P 50V J				01
C839	**UX062100**	Ceramic Capacitor (Chip)	100P 50V J				01
C840	**UX061470**	Ceramic Capacitor (Chip)	47P 50V J				
C841	**UR847470**	Electrolytic Cap.	47.00 25.0V				01
C842	**UX064100**	Ceramic Capacitor (Chip)	0.0100 50V K				01
C843	**UX064100**	Ceramic Capacitor (Chip)	0.0100 50V K				01
CN903	**V2156500**	FMN Connector	FMN 12P TE				03
CN904	**V2156500**	FMN Connector	FMN 12P TE				03
D101	**VT332900**	Diode	1SS355 TE-17				01
D102	**VT332900**	Diode	1SS355 TE-17				01
D201	**VT332900**	Diode	1SS355 TE-17				01
D202	**VT332900**	Diode	1SS355 TE-17				01
D301	**VT332900**	Diode	1SS355 TE-17				01
D302	**VT332900**	Diode	1SS355 TE-17				01
D401	**VT332900**	Diode	1SS355 TE-17				01
D402	**VT332900**	Diode	1SS355 TE-17				01
D501	**VT332900**	Diode	1SS355 TE-17				01
D502	**VT332900**	Diode	1SS355 TE-17				01
D601	**VT332900**	Diode	1SS355 TE-17				01
D602	**VT332900**	Diode	1SS355 TE-17				01
D701	**VT332900**	Diode	1SS355 TE-17				01
D702	**VT332900**	Diode	1SS355 TE-17				01
D801	**VT332900**	Diode	1SS355 TE-17				01
D802	**VT332900**	Diode	1SS355 TE-17				01
IC101	**XJ553A00**	IC	NJM2068MD-T1		OP AMP		02
-105	**XJ553A00**	IC	NJM2068MD-T1		OP AMP		02
IC106	**IG103520**	IC	NJM4558M(T1)		OP AMP		03
IC107	**XJ553A00**	IC	NJM2068MD-T1		OP AMP		02
IC201	**XJ553A00**	IC	NJM2068MD-T1		OP AMP		02
IC301	**XJ553A00**	IC	NJM2068MD-T1		OP AMP		02
-305	**XJ553A00**	IC	NJM2068MD-T1		OP AMP		02
IC306	**IG103520**	IC	NJM4558M(T1)		OP AMP		03
IC307	**XJ553A00**	IC	NJM2068MD-T1		OP AMP		02
IC401	**XJ553A00**	IC	NJM2068MD-T1		OP AMP		02
IC501	**XJ553A00**	IC	NJM2068MD-T1		OP AMP		02
-505	**XJ553A00**	IC	NJM2068MD-T1		OP AMP		02
IC506	**IG103520**	IC	NJM4558M(T1)		OP AMP		03
IC507	**XJ553A00**	IC	NJM2068MD-T1		OP AMP		02
IC601	**XJ553A00**	IC	NJM2068MD-T1		OP AMP		02
IC701	**XJ553A00**	IC	NJM2068MD-T1		OP AMP		02
-705	**XJ553A00**	IC	NJM2068MD-T1		OP AMP		02
IC706	**IG103520**	IC	NJM4558M(T1)		OP AMP		03
IC707	**XJ553A00**	IC	NJM2068MD-T1		OP AMP		02
IC801	**XJ553A00**	IC	NJM2068MD-T1		OP AMP		02
JK101	**V6127200**	XLM Connector	JACK JY-5042		INPUT A (CH1)		03
JK102	**V3939200**	Phone Jack	JY6351J-46-250 2SW		INPUT B (CH1)		02
JK103	**V2886000**	Phone Jack	JY-6351J-06-340		INSERT (CH1)		02
JK201	**V6127200**	XLM Connector	JACK JY-5042		INPUT A (CH2)		03
JK202	**V3939200**	Phone Jack	JY6351J-46-250 2SW		INPUT B (CH2)		02
JK203	**V2886000**	Phone Jack	JY-6351J-06-340		INSERT (CH2)		02
JK301	**V6127200**	XLM Connector	JACK JY-5042		INPUT A (CH3)		03
JK302	**V3939200**	Phone Jack	JY6351J-46-250 2SW		INPUT B (CH3)		02
JK303	**V2886000**	Phone Jack	JY-6351J-06-340		INSERT (CH3)		02
JK401	**V6127200**	XLM Connector	JACK JY-5042		INPUT A (CH4)		03
JK402	**V3939200**	Phone Jack	JY6351J-46-250 2SW		INPUT B (CH4)		02
JK403	**V2886000**	Phone Jack	JY-6351J-06-340		INSERT (CH4)		02
JK501	**V6127200**	XLM Connector	JACK JY-5042		INPUT A (CH5)		03

✻: New Parts

RANK: Japan only

	REF NO.	PART NO.	DESCRIPTION			REMARKS	QTY	RANK
	JK502	**V3939200**	Phone Jack	JY6351J-46-250 2SW		INPUT B (CH5)		02
	JK503	**V2886000**	Phone Jack	JY-6351J-06-340		INSERT (CH5)		02
	JK601	**V6127200**	XLM Connector	JACK JY-5042		INPUT A (CH6)		03
	JK602	**V3939200**	Phone Jack	JY6351J-46-250 2SW		INPUT B (CH6)		02
	JK603	**V2886000**	Phone Jack	JY-6351J-06-340		INSERT (CH6)		02
	JK701	**V6127200**	XLM Connector	JACK JY-5042		INPUT A (CH7)		03
	JK702	**V3939200**	Phone Jack	JY6351J-46-250 2SW		INPUT B (CH7)		02
	JK703	**V2886000**	Phone Jack	JY-6351J-06-340		INSERT (CH7)		02
	JK801	**V6127200**	XLM Connector	JACK JY-5042		INPUT A (CH8)		03
	JK802	**V3939200**	Phone Jack	JY6351J-46-250 2SW		INPUT B (CH8)		02
	JK803	**V2886000**	Phone Jack	JY-6351J-06-340		INSERT (CH8)		02
*	LD101	**V8840400**	LED	L34YD-TNB5/13.6 YE		ON(CH1)		01
*	LD102	**V8840100**	LED	L34HD-TNB5/13.6 RE		PEAK(CH1)		01
*	LD103	**V8840200**	LED	L34GD-TNB5/13.6 GR		SIGNAL(CH1)		01
*	LD201	**V8840400**	LED	L34YD-TNB5/13.6 YE		ON(CH2)		01
*	LD202	**V8840100**	LED	L34HD-TNB5/13.6 RE		PEAK(CH2)		01
*	LD203	**V8840200**	LED	L34GD-TNB5/13.6 GR		SIGNAL(CH2)		01
*	LD301	**V8840400**	LED	L34YD-TNB5/13.6 YE		ON(CH3)		01
*	LD302	**V8840100**	LED	L34HD-TNB5/13.6 RE		PEAK(CH3)		01
*	LD303	**V8840200**	LED	L34GD-TNB5/13.6 GR		SIGNAL(CH3)		01
*	LD401	**V8840400**	LED	L34YD-TNB5/13.6 YE		ON(CH4)		01
*	LD402	**V8840100**	LED	L34HD-TNB5/13.6 RE		PEAK(CH4)		01
*	LD403	**V8840200**	LED	L34GD-TNB5/13.6 GR		SIGNAL(CH4)		01
*	LD501	**V8840400**	LED	L34YD-TNB5/13.6 YE		ON(CH5)		01
*	LD502	**V8840100**	LED	L34HD-TNB5/13.6 RE		PEAK(CH5)		01
*	LD503	**V8840200**	LED	L34GD-TNB5/13.6 GR		SIGNAL(CH5)		01
*	LD601	**V8840400**	LED	L34YD-TNB5/13.6 YE		ON(CH6)		01
*	LD602	**V8840100**	LED	L34HD-TNB5/13.6 RE		PEAK(CH6)		01
*	LD603	**V8840200**	LED	L34GD-TNB5/13.6 GR		SIGNAL(CH6)		01
*	LD701	**V8840400**	LED	L34YD-TNB5/13.6 YE		ON(CH7)		01
*	LD702	**V8840100**	LED	L34HD-TNB5/13.6 RE		PEAK(CH7)		01
*	LD703	**V8840200**	LED	L34GD-TNB5/13.6 GR		SIGNAL(CH7)		01
*	LD801	**V8840400**	LED	L34YD-TNB5/13.6 YE		ON(CH8)		01
*	LD802	**V8840100**	LED	L34HD-TNB5/13.6 RE		PEAK(CH8)		01
*	LD803	**V8840200**	LED	L34GD-TNB5/13.6 GR		SIGNAL(CH8)		01
*	LD901	**V8840100**	LED	L34HD-TNB5/13.6 RE		PHANTOM		01
*	Q101	**V7421700**	Transistor (chip)	2SC2SC3324 GR,BL				01
*	Q102	**V7421700**	Transistor (chip)	2SC2SC3324 GR,BL				01
*	Q103	**V7421800**	Transistor	2SA2SA1312 GR,BL				01
	Q104	**VV556400**	Transistor	2SC2412K Q,R,S				01
*	Q201	**V7421700**	Transistor (chip)	2SC2SC3324 GR,BL				01
*	Q202	**V7421700**	Transistor (chip)	2SC2SC3324 GR,BL				01
*	Q203	**V7421800**	Transistor	2SA2SA1312 GR,BL				01
	Q204	**VV556400**	Transistor	2SC2412K Q,R,S				01
*	Q301	**V7421700**	Transistor (chip)	2SC2SC3324 GR,BL				01
*	Q302	**V7421700**	Transistor (chip)	2SC2SC3324 GR,BL				01
*	Q303	**V7421800**	Transistor	2SA2SA1312 GR,BL				01
	Q304	**VV556400**	Transistor	2SC2412K Q,R,S				01
*	Q401	**V7421700**	Transistor (chip)	2SC2SC3324 GR,BL				01
*	Q402	**V7421700**	Transistor (chip)	2SC2SC3324 GR,BL				01
*	Q403	**V7421800**	Transistor	2SA2SA1312 GR,BL				01
	Q404	**VV556400**	Transistor	2SC2412K Q,R,S				01
	Q405	**VV556400**	Transistor	2SC2412K Q,R,S				01
*	Q501	**V7421700**	Transistor (chip)	2SC2SC3324 GR,BL				01
*	Q502	**V7421700**	Transistor (chip)	2SC2SC3324 GR,BL				01
*	Q503	**V7421800**	Transistor	2SA2SA1312 GR,BL				01
	Q504	**VV556400**	Transistor	2SC2412K Q,R,S				01
*	Q601	**V7421700**	Transistor (chip)	2SC2SC3324 GR,BL				01
*	Q602	**V7421700**	Transistor (chip)	2SC2SC3324 GR,BL				01
*	Q603	**V7421800**	Transistor	2SA2SA1312 GR,BL				01
	Q604	**VV556400**	Transistor	2SC2412K Q,R,S				01
*	Q701	**V7421700**	Transistor (chip)	2SC2SC3324 GR,BL				01
*	Q702	**V7421700**	Transistor (chip)	2SC2SC3324 GR,BL				01
*	Q703	**V7421800**	Transistor	2SA2SA1312 GR,BL				01
	Q704	**VV556400**	Transistor	2SC2412K Q,R,S				01
*	Q801	**V7421700**	Transistor (chip)	2SC2SC3324 GR,BL				01
*	Q802	**V7421700**	Transistor (chip)	2SC2SC3324 GR,BL				01
*	Q803	**V7421800**	Transistor	2SA2SA1312 GR,BL				01
	Q804	**VV556400**	Transistor	2SC2412K Q,R,S				01
	Q805	**VV556400**	Transistor	2SC2412K Q,R,S				01

✻: New Parts

RANK: Japan only

	REF NO.	PART NO.	DESCRIPTION			REMARKS	QTY	RANK
*	R101	**RG005180**	Carbon Resistor (chip)	180 0.1 J				
	R102	**VV065300**	Metal Film Resistor	6.8K 1/4 F				01
	R103	**VV065300**	Metal Film Resistor	6.8K 1/4 F				01
*	R104	**RF358100**	Carbon Resistor (chip)	100.0K : D 1608				01
*	R105	**RF358100**	Carbon Resistor (chip)	100.0K : D 1608				01
	R106	**RG007100**	Carbon Resistor (chip)	10K 0.1 J				
	R107	**RF357100**	Carbon Resistor (chip)	10.0K : D 1608				01
*	R108	**RF356110**	Carbon Resistor (chip)	1.1K : D 1608				
	R109	**RF357100**	Carbon Resistor (chip)	10.0K : D 1608				01
*	R110	**RF358100**	Carbon Resistor (chip)	100.0K : D 1608				01
*	R111	**RF358100**	Carbon Resistor (chip)	100.0K : D 1608				01
	R112	**RG007220**	Carbon Resistor (chip)	22K 0.1 J				
	R113	**RG006470**	Carbon Resistor (chip)	4.7K 0.1 J				
*	R114	**RF358100**	Carbon Resistor (chip)	100.0K : D 1608				01
*	R115	**RF358100**	Carbon Resistor (chip)	100.0K : D 1608				01
	R116	**RG004100**	Carbon Resistor (chip)	10 0.1 J				
*	R117	**RF356220**	Carbon Resistor (chip)	2.2K : D 1608				01
*	R118	**RF356820**	Carbon Resistor (chip)	8.2K : D 1608				
*	R119	**RF354200**	Carbon Resistor (chip)	20.0 : D 1608				01
*	R120	**RF357240**	Carbon Resistor (chip)	24.0K : D 1608				
*	R121	**RF356220**	Carbon Resistor (chip)	2.2K : D 1608				01
*	R122	**RF356820**	Carbon Resistor (chip)	8.2K : D 1608				
*	R123	**RF357240**	Carbon Resistor (chip)	24.0K : D 1608				
	R124	**RG004100**	Carbon Resistor (chip)	10 0.1 J				
*	R125	**RF356470**	Carbon Resistor (chip)	4.7K : D 1608				01
*	R126	**RF356470**	Carbon Resistor (chip)	4.7K : D 1608				01
	R127	**RG008220**	Carbon Resistor (chip)	220K 0.1 J				
*	R128	**RG007150**	Carbon Resistor (chip)	15K 0.1 J				
	R129	**RG007300**	Carbon Resistor (chip)	30K 0.1 J				
	R130	**RG004100**	Carbon Resistor (chip)	10 0.1 J				
	R131	**RG008220**	Carbon Resistor (chip)	220K 0.1 J				
	R132	**RG008220**	Carbon Resistor (chip)	220K 0.1 J				
	R133	**RG007100**	Carbon Resistor (chip)	10K 0.1 J				
	R134	**RG006470**	Carbon Resistor (chip)	4.7K 0.1 J				
	R135	**RG007330**	Carbon Resistor (chip)	33K 0.1 J				
	R136	**RG007100**	Carbon Resistor (chip)	10K 0.1 J				
	R137	**RG006560**	Carbon Resistor (chip)	5.6K 0.1 J				
	R138	**RG006470**	Carbon Resistor (chip)	4.7K 0.1 J				
	R139	**RG006820**	Carbon Resistor (chip)	8.2K 0.1 J				
	R140	**RG006470**	Carbon Resistor (chip)	4.7K 0.1 J				
	R141	**RG006820**	Carbon Resistor (chip)	8.2K 0.1 J				
	R142	**RG004100**	Carbon Resistor (chip)	10 0.1 J				
	R143	**RG008220**	Carbon Resistor (chip)	220K 0.1 J				
	R144	**RG006560**	Carbon Resistor (chip)	5.6K 0.1 J				
	-146	**RG006560**	Carbon Resistor (chip)	5.6K 0.1 J				
	R147	**RG007560**	Carbon Resistor (chip)	56K 0.1 J				
	R148	**RG007330**	Carbon Resistor (chip)	33K 0.1 J				
	R149	**RG006560**	Carbon Resistor (chip)	5.6K 0.1 J				
	R150	**RG008220**	Carbon Resistor (chip)	220K 0.1 J				
	R151	**RG005220**	Carbon Resistor (chip)	220 0.1 J				
	R152	**RG007120**	Carbon Resistor (chip)	12K 0.1 J				
	R153	**RG006330**	Carbon Resistor (chip)	3.3K 0.1 J				
	R154	**RG007330**	Carbon Resistor (chip)	33K 0.1 J				
	R155	**RG008100**	Carbon Resistor (chip)	100K 0.1 J				
	R156	**RG005220**	Carbon Resistor (chip)	220 0.1 J				
*	R157	**RG206220**	Carbon Resistor (chip)	2.2K 1/4 J				
	R158	**RG007180**	Carbon Resistor (chip)	18K 0.1 J				
	R159	**RG005220**	Carbon Resistor (chip)	220 0.1 J				
	R160	**RG006470**	Carbon Resistor (chip)	4.7K 0.1 J				
	R161	**RG007100**	Carbon Resistor (chip)	10K 0.1 J				
	R162	**RG004100**	Carbon Resistor (chip)	10 0.1 J				
	R163	**RG008220**	Carbon Resistor (chip)	220K 0.1 J				
	R164	**RG007180**	Carbon Resistor (chip)	18K 0.1 J				
	-169	**RG007180**	Carbon Resistor (chip)	18K 0.1 J				
*	R170	**RG007360**	Carbon Resistor (chip)	36K 0.1 J				
*	R171	**RG007360**	Carbon Resistor (chip)	36K 0.1 J				
	R172	**RG008100**	Carbon Resistor (chip)	100K 0.1 J				
	R173	**VV276800**	Flame Proof C. Resistor	100 1/4 J				01
*	R201	**RG005180**	Carbon Resistor (chip)	180 0.1 J				
	R202	**VV065300**	Metal Film Resistor	6.8K 1/4 F				01

✻: New Parts

RANK: Japan only

	REF NO.	PART NO.	DESCRIPTION			REMARKS	QTY	RANK
	R203	**VV065300**	Metal Film Resistor	6.8K 1/4 F				01
*	R204	**RF358100**	Carbon Resistor (chip)	100.0K : D 1608				01
*	R205	**RF358100**	Carbon Resistor (chip)	100.0K : D 1608				01
	R206	**RG007100**	Carbon Resistor (chip)	10K 0.1 J				
	R207	**RF357100**	Carbon Resistor (chip)	10.0K : D 1608				01
*	R208	**RF356110**	Carbon Resistor (chip)	1.1K : D 1608				
	R209	**RF357100**	Carbon Resistor (chip)	10.0K : D 1608				01
*	R210	**RF358100**	Carbon Resistor (chip)	100.0K : D 1608				01
*	R211	**RF358100**	Carbon Resistor (chip)	100.0K : D 1608				01
	R212	**RG007220**	Carbon Resistor (chip)	22K 0.1 J				
	R213	**RG006470**	Carbon Resistor (chip)	4.7K 0.1 J				
*	R214	**RF358100**	Carbon Resistor (chip)	100.0K : D 1608				01
*	R215	**RF358100**	Carbon Resistor (chip)	100.0K : D 1608				01
	R216	**RG004100**	Carbon Resistor (chip)	10 0.1 J				
*	R217	**RF356220**	Carbon Resistor (chip)	2.2K : D 1608				01
*	R218	**RF356820**	Carbon Resistor (chip)	8.2K : D 1608				
*	R219	**RF354200**	Carbon Resistor (chip)	20.0 : D 1608				01
*	R220	**RF357240**	Carbon Resistor (chip)	24.0K : D 1608				
*	R221	**RF356220**	Carbon Resistor (chip)	2.2K : D 1608				01
*	R222	**RF356820**	Carbon Resistor (chip)	8.2K : D 1608				
*	R223	**RF357240**	Carbon Resistor (chip)	24.0K : D 1608				
	R224	**RG004100**	Carbon Resistor (chip)	10 0.1 J				
*	R225	**RF356470**	Carbon Resistor (chip)	4.7K : D 1608				01
*	R226	**RF356470**	Carbon Resistor (chip)	4.7K : D 1608				01
	R227	**RG008220**	Carbon Resistor (chip)	220K 0.1 J				
*	R228	**RG007150**	Carbon Resistor (chip)	15K 0.1 J				
	R229	**RG007300**	Carbon Resistor (chip)	30K 0.1 J				
	R230	**RG004100**	Carbon Resistor (chip)	10 0.1 J				
	R231	**RG008220**	Carbon Resistor (chip)	220K 0.1 J				
	R232	**RG008220**	Carbon Resistor (chip)	220K 0.1 J				
	R233	**RG007100**	Carbon Resistor (chip)	10K 0.1 J				
	R234	**RG006470**	Carbon Resistor (chip)	4.7K 0.1 J				
	R235	**RG007330**	Carbon Resistor (chip)	33K 0.1 J				
	R236	**RG007100**	Carbon Resistor (chip)	10K 0.1 J				
	R237	**RG006560**	Carbon Resistor (chip)	5.6K 0.1 J				
	R238	**RG006470**	Carbon Resistor (chip)	4.7K 0.1 J				
	R239	**RG006820**	Carbon Resistor (chip)	8.2K 0.1 J				
	R240	**RG006470**	Carbon Resistor (chip)	4.7K 0.1 J				
	R241	**RG006820**	Carbon Resistor (chip)	8.2K 0.1 J				
	R242	**RG004100**	Carbon Resistor (chip)	10 0.1 J				
	R243	**RG008220**	Carbon Resistor (chip)	220K 0.1 J				
	R244	**RG006560**	Carbon Resistor (chip)	5.6K 0.1 J				
	-246	**RG006560**	Carbon Resistor (chip)	5.6K 0.1 J				
	R247	**RG007560**	Carbon Resistor (chip)	56K 0.1 J				
	R248	**RG007330**	Carbon Resistor (chip)	33K 0.1 J				
	R249	**RG006560**	Carbon Resistor (chip)	5.6K 0.1 J				
	R250	**RG008220**	Carbon Resistor (chip)	220K 0.1 J				
	R251	**RG005220**	Carbon Resistor (chip)	220 0.1 J				
	R252	**RG007120**	Carbon Resistor (chip)	12K 0.1 J				
	R253	**RG006330**	Carbon Resistor (chip)	3.3K 0.1 J				
	R254	**RG007330**	Carbon Resistor (chip)	33K 0.1 J				
	R255	**RG008100**	Carbon Resistor (chip)	100K 0.1 J				
	R256	**RG005220**	Carbon Resistor (chip)	220 0.1 J				
*	R257	**RG206220**	Carbon Resistor (chip)	2.2K 1/4 J				
	R258	**RG007180**	Carbon Resistor (chip)	18K 0.1 J				
	R259	**RG005220**	Carbon Resistor (chip)	220 0.1 J				
	R260	**RG006470**	Carbon Resistor (chip)	4.7K 0.1 J				
	R261	**RG007100**	Carbon Resistor (chip)	10K 0.1 J				
	R262	**RG004100**	Carbon Resistor (chip)	10 0.1 J				
	R263	**RG008220**	Carbon Resistor (chip)	220K 0.1 J				
	R264	**RG007180**	Carbon Resistor (chip)	18K 0.1 J				
	-269	**RG007180**	Carbon Resistor (chip)	18K 0.1 J				
*	R270	**RG007360**	Carbon Resistor (chip)	36K 0.1 J				
*	R271	**RG007360**	Carbon Resistor (chip)	36K 0.1 J				
*	R301	**RG005180**	Carbon Resistor (chip)	180 0.1 J				
	R302	**VV065300**	Metal Film Resistor	6.8K 1/4 F				01
	R303	**VV065300**	Metal Film Resistor	6.8K 1/4 F				01
*	R304	**RF358100**	Carbon Resistor (chip)	100.0K : D 1608				01
*	R305	**RF358100**	Carbon Resistor (chip)	100.0K : D 1608				01
	R306	**RG007100**	Carbon Resistor (chip)	10K 0.1 J				

❇: New Parts

RANK: Japan only

	REF NO.	PART NO.	DESCRIPTION			REMARKS	QTY	RANK
	R307	**RF357100**	Carbon Resistor (chip)	10.0K : D 1608				01
*	R308	**RF356110**	Carbon Resistor (chip)	1.1K : D 1608				
	R309	**RF357100**	Carbon Resistor (chip)	10.0K : D 1608				01
*	R310	**RF358100**	Carbon Resistor (chip)	100.0K : D 1608				01
*	R311	**RF358100**	Carbon Resistor (chip)	100.0K : D 1608				01
	R312	**RG007220**	Carbon Resistor (chip)	22K 0.1 J				
	R313	**RG006470**	Carbon Resistor (chip)	4.7K 0.1 J				
*	R314	**RF358100**	Carbon Resistor (chip)	100.0K : D 1608				01
*	R315	**RF358100**	Carbon Resistor (chip)	100.0K : D 1608				01
	R316	**RG004100**	Carbon Resistor (chip)	10 0.1 J				
*	R317	**RF356220**	Carbon Resistor (chip)	2.2K : D 1608				01
*	R318	**RF356820**	Carbon Resistor (chip)	8.2K : D 1608				
*	R319	**RF354200**	Carbon Resistor (chip)	20.0 : D 1608				01
*	R320	**RF357240**	Carbon Resistor (chip)	24.0K : D 1608				
*	R321	**RF356220**	Carbon Resistor (chip)	2.2K : D 1608				01
*	R322	**RF356820**	Carbon Resistor (chip)	8.2K : D 1608				
*	R323	**RF357240**	Carbon Resistor (chip)	24.0K : D 1608				
	R324	**RG004100**	Carbon Resistor (chip)	10 0.1 J				
*	R325	**RF356470**	Carbon Resistor (chip)	4.7K : D 1608				01
*	R326	**RF356470**	Carbon Resistor (chip)	4.7K : D 1608				01
	R327	**RG008220**	Carbon Resistor (chip)	220K 0.1 J				
*	R328	**RG007150**	Carbon Resistor (chip)	15K 0.1 J				
	R329	**RG007300**	Carbon Resistor (chip)	30K 0.1 J				
	R330	**RG004100**	Carbon Resistor (chip)	10 0.1 J				
	R331	**RG008220**	Carbon Resistor (chip)	220K 0.1 J				
	R332	**RG008220**	Carbon Resistor (chip)	220K 0.1 J				
	R333	**RG007100**	Carbon Resistor (chip)	10K 0.1 J				
	R334	**RG006470**	Carbon Resistor (chip)	4.7K 0.1 J				
	R335	**RG007330**	Carbon Resistor (chip)	33K 0.1 J				
	R336	**RG007100**	Carbon Resistor (chip)	10K 0.1 J				
	R337	**RG006560**	Carbon Resistor (chip)	5.6K 0.1 J				
	R338	**RG006470**	Carbon Resistor (chip)	4.7K 0.1 J				
	R339	**RG006820**	Carbon Resistor (chip)	8.2K 0.1 J				
	R340	**RG006470**	Carbon Resistor (chip)	4.7K 0.1 J				
	R341	**RG006820**	Carbon Resistor (chip)	8.2K 0.1 J				
	R342	**RG004100**	Carbon Resistor (chip)	10 0.1 J				
	R343	**RG008220**	Carbon Resistor (chip)	220K 0.1 J				
	R344	**RG006560**	Carbon Resistor (chip)	5.6K 0.1 J				
	-346	**RG006560**	Carbon Resistor (chip)	5.6K 0.1 J				
	R347	**RG007560**	Carbon Resistor (chip)	56K 0.1 J				
	R348	**RG007330**	Carbon Resistor (chip)	33K 0.1 J				
	R349	**RG006560**	Carbon Resistor (chip)	5.6K 0.1 J				
	R350	**RG008220**	Carbon Resistor (chip)	220K 0.1 J				
	R351	**RG005220**	Carbon Resistor (chip)	220 0.1 J				
	R352	**RG007120**	Carbon Resistor (chip)	12K 0.1 J				
	R353	**RG006330**	Carbon Resistor (chip)	3.3K 0.1 J				
	R354	**RG007330**	Carbon Resistor (chip)	33K 0.1 J				
	R355	**RG008100**	Carbon Resistor (chip)	100K 0.1 J				
	R356	**RG005220**	Carbon Resistor (chip)	220 0.1 J				
*	R357	**RG206220**	Carbon Resistor (chip)	2.2K 1/4 J				
	R358	**RG007180**	Carbon Resistor (chip)	18K 0.1 J				
	R359	**RG005220**	Carbon Resistor (chip)	220 0.1 J				
	R360	**RG006470**	Carbon Resistor (chip)	4.7K 0.1 J				
	R361	**RG007100**	Carbon Resistor (chip)	10K 0.1 J				
	R362	**RG004100**	Carbon Resistor (chip)	10 0.1 J				
	R363	**RG008220**	Carbon Resistor (chip)	220K 0.1 J				
	R364	**RG007180**	Carbon Resistor (chip)	18K 0.1 J				
	-369	**RG007180**	Carbon Resistor (chip)	18K 0.1 J				
*	R370	**RG007360**	Carbon Resistor (chip)	36K 0.1 J				
*	R371	**RG007360**	Carbon Resistor (chip)	36K 0.1 J				
*	R401	**RG005180**	Carbon Resistor (chip)	180 0.1 J				
	R402	**VV065300**	Metal Film Resistor	6.8K 1/4 F				01
	R403	**VV065300**	Metal Film Resistor	6.8K 1/4 F				01
*	R404	**RF358100**	Carbon Resistor (chip)	100.0K : D 1608				01
*	R405	**RF358100**	Carbon Resistor (chip)	100.0K : D 1608				01
	R406	**RG007100**	Carbon Resistor (chip)	10K 0.1 J				
	R407	**RF357100**	Carbon Resistor (chip)	10.0K : D 1608				01
*	R408	**RF356110**	Carbon Resistor (chip)	1.1K : D 1608				
	R409	**RF357100**	Carbon Resistor (chip)	10.0K : D 1608				01
*	R410	**RF358100**	Carbon Resistor (chip)	100.0K : D 1608				01

*: New Parts

RANK: Japan only

	REF NO.	PART NO.	DESCRIPTION			REMARKS	QTY	RANK
*	R411	**RF358100**	Carbon Resistor (chip)	100.0K : D 1608				01
	R412	**RG007220**	Carbon Resistor (chip)	22K 0.1 J				
	R413	**RG006470**	Carbon Resistor (chip)	4.7K 0.1 J				
*	R414	**RF358100**	Carbon Resistor (chip)	100.0K : D 1608				01
*	R415	**RF358100**	Carbon Resistor (chip)	100.0K : D 1608				01
	R416	**RG004100**	Carbon Resistor (chip)	10 0.1 J				
*	R417	**RF356220**	Carbon Resistor (chip)	2.2K : D 1608				01
*	R418	**RF356820**	Carbon Resistor (chip)	8.2K : D 1608				
*	R419	**RF354200**	Carbon Resistor (chip)	20.0 : D 1608				01
*	R420	**RF357240**	Carbon Resistor (chip)	24.0K : D 1608				
*	R421	**RF356220**	Carbon Resistor (chip)	2.2K : D 1608				01
*	R422	**RF356820**	Carbon Resistor (chip)	8.2K : D 1608				
*	R423	**RF357240**	Carbon Resistor (chip)	24.0K : D 1608				
	R424	**RG004100**	Carbon Resistor (chip)	10 0.1 J				
*	R425	**RF356470**	Carbon Resistor (chip)	4.7K : D 1608				01
*	R426	**RF356470**	Carbon Resistor (chip)	4.7K : D 1608				01
	R427	**RG008220**	Carbon Resistor (chip)	220K 0.1 J				
*	R428	**RG007150**	Carbon Resistor (chip)	15K 0.1 J				
	R429	**RG007300**	Carbon Resistor (chip)	30K 0.1 J				
	R430	**RG004100**	Carbon Resistor (chip)	10 0.1 J				
	R431	**RG008220**	Carbon Resistor (chip)	220K 0.1 J				
	R432	**RG008220**	Carbon Resistor (chip)	220K 0.1 J				
	R433	**RG007100**	Carbon Resistor (chip)	10K 0.1 J				
	R434	**RG006470**	Carbon Resistor (chip)	4.7K 0.1 J				
	R435	**RG007330**	Carbon Resistor (chip)	33K 0.1 J				
	R436	**RG007100**	Carbon Resistor (chip)	10K 0.1 J				
	R437	**RG006560**	Carbon Resistor (chip)	5.6K 0.1 J				
	R438	**RG006470**	Carbon Resistor (chip)	4.7K 0.1 J				
	R439	**RG006820**	Carbon Resistor (chip)	8.2K 0.1 J				
	R440	**RG006470**	Carbon Resistor (chip)	4.7K 0.1 J				
	R441	**RG006820**	Carbon Resistor (chip)	8.2K 0.1 J				
	R442	**RG004100**	Carbon Resistor (chip)	10 0.1 J				
	R443	**RG008220**	Carbon Resistor (chip)	220K 0.1 J				
	R444	**RG006560**	Carbon Resistor (chip)	5.6K 0.1 J				
	-446	**RG006560**	Carbon Resistor (chip)	5.6K 0.1 J				
	R447	**RG007560**	Carbon Resistor (chip)	56K 0.1 J				
	R448	**RG007330**	Carbon Resistor (chip)	33K 0.1 J				
	R449	**RG006560**	Carbon Resistor (chip)	5.6K 0.1 J				
	R450	**RG008220**	Carbon Resistor (chip)	220K 0.1 J				
	R451	**RG005220**	Carbon Resistor (chip)	220 0.1 J				
	R452	**RG007120**	Carbon Resistor (chip)	12K 0.1 J				
	R453	**RG006330**	Carbon Resistor (chip)	3.3K 0.1 J				
	R454	**RG007330**	Carbon Resistor (chip)	33K 0.1 J				
	R455	**RG008100**	Carbon Resistor (chip)	100K 0.1 J				
	R456	**RG005220**	Carbon Resistor (chip)	220 0.1 J				
*	R457	**RG206220**	Carbon Resistor (chip)	2.2K 1/4 J				
	R458	**RG007180**	Carbon Resistor (chip)	18K 0.1 J				
	R459	**RG005220**	Carbon Resistor (chip)	220 0.1 J				
	R460	**RG006470**	Carbon Resistor (chip)	4.7K 0.1 J				
	R461	**RG007100**	Carbon Resistor (chip)	10K 0.1 J				
	R462	**RG004100**	Carbon Resistor (chip)	10 0.1 J				
	R463	**RG008220**	Carbon Resistor (chip)	220K 0.1 J				
	R464	**RG007180**	Carbon Resistor (chip)	18K 0.1 J				
	-469	**RG007180**	Carbon Resistor (chip)	18K 0.1 J				
*	R470	**RG007360**	Carbon Resistor (chip)	36K 0.1 J				
*	R471	**RG007360**	Carbon Resistor (chip)	36K 0.1 J				
	R472	**RG007120**	Carbon Resistor (chip)	12K 0.1 J				
	R473	**RG006150**	Carbon Resistor (chip)	1.5K 0.1 J				
	R474	**RG205100**	Carbon Resistor (chip)	100 1/4 J				
*	R501	**RG005180**	Carbon Resistor (chip)	180 0.1 J				
	R502	**VV065300**	Metal Film Resistor	6.8K 1/4 F				01
	R503	**VV065300**	Metal Film Resistor	6.8K 1/4 F				01
*	R504	**RF358100**	Carbon Resistor (chip)	100.0K : D 1608				01
*	R505	**RF358100**	Carbon Resistor (chip)	100.0K : D 1608				01
	R506	**RG007100**	Carbon Resistor (chip)	10K 0.1 J				
	R507	**RF357100**	Carbon Resistor (chip)	10.0K : D 1608				01
*	R508	**RF356110**	Carbon Resistor (chip)	1.1K : D 1608				
	R509	**RF357100**	Carbon Resistor (chip)	10.0K : D 1608				01
*	R510	**RF358100**	Carbon Resistor (chip)	100.0K : D 1608				01
*	R511	**RF358100**	Carbon Resistor (chip)	100.0K : D 1608				01

❇: New Parts

RANK: Japan only

	REF NO.	PART NO.	DESCRIPTION			REMARKS	QTY	RANK
	R512	**RG007220**	Carbon Resistor (chip)	22K 0.1 J				
	R513	**RG006470**	Carbon Resistor (chip)	4.7K 0.1 J				
*	R514	**RF358100**	Carbon Resistor (chip)	100.0K : D 1608				01
*	R515	**RF358100**	Carbon Resistor (chip)	100.0K : D 1608				01
	R516	**RG004100**	Carbon Resistor (chip)	10 0.1 J				
*	R517	**RF356220**	Carbon Resistor (chip)	2.2K : D 1608				01
*	R518	**RF356820**	Carbon Resistor (chip)	8.2K : D 1608				
*	R519	**RF354200**	Carbon Resistor (chip)	20.0 : D 1608				01
*	R520	**RF357240**	Carbon Resistor (chip)	24.0K : D 1608				
*	R521	**RF356220**	Carbon Resistor (chip)	2.2K : D 1608				01
*	R522	**RF356820**	Carbon Resistor (chip)	8.2K : D 1608				
*	R523	**RF357240**	Carbon Resistor (chip)	24.0K : D 1608				
	R524	**RG004100**	Carbon Resistor (chip)	10 0.1 J				
*	R525	**RF356470**	Carbon Resistor (chip)	4.7K : D 1608				01
*	R526	**RF356470**	Carbon Resistor (chip)	4.7K : D 1608				01
	R527	**RG008220**	Carbon Resistor (chip)	220K 0.1 J				
*	R528	**RG007150**	Carbon Resistor (chip)	15K 0.1 J				
	R529	**RG007300**	Carbon Resistor (chip)	30K 0.1 J				
	R530	**RG004100**	Carbon Resistor (chip)	10 0.1 J				
	R531	**RG008220**	Carbon Resistor (chip)	220K 0.1 J				
	R532	**RG008220**	Carbon Resistor (chip)	220K 0.1 J				
	R533	**RG007100**	Carbon Resistor (chip)	10K 0.1 J				
	R534	**RG006470**	Carbon Resistor (chip)	4.7K 0.1 J				
	R535	**RG007330**	Carbon Resistor (chip)	33K 0.1 J				
	R536	**RG007100**	Carbon Resistor (chip)	10K 0.1 J				
	R537	**RG006560**	Carbon Resistor (chip)	5.6K 0.1 J				
	R538	**RG006470**	Carbon Resistor (chip)	4.7K 0.1 J				
	R539	**RG006820**	Carbon Resistor (chip)	8.2K 0.1 J				
	R540	**RG006470**	Carbon Resistor (chip)	4.7K 0.1 J				
	R541	**RG006820**	Carbon Resistor (chip)	8.2K 0.1 J				
	R542	**RG004100**	Carbon Resistor (chip)	10 0.1 J				
	R543	**RG008220**	Carbon Resistor (chip)	220K 0.1 J				
	R544	**RG006560**	Carbon Resistor (chip)	5.6K 0.1 J				
	-546	**RG006560**	Carbon Resistor (chip)	5.6K 0.1 J				
	R547	**RG007560**	Carbon Resistor (chip)	56K 0.1 J				
	R548	**RG007330**	Carbon Resistor (chip)	33K 0.1 J				
	R549	**RG006560**	Carbon Resistor (chip)	5.6K 0.1 J				
	R550	**RG008220**	Carbon Resistor (chip)	220K 0.1 J				
	R551	**RG005220**	Carbon Resistor (chip)	220 0.1 J				
	R552	**RG007120**	Carbon Resistor (chip)	12K 0.1 J				
	R553	**RG006330**	Carbon Resistor (chip)	3.3K 0.1 J				
	R554	**RG007330**	Carbon Resistor (chip)	33K 0.1 J				
	R555	**RG008100**	Carbon Resistor (chip)	100K 0.1 J				
	R556	**RG005220**	Carbon Resistor (chip)	220 0.1 J				
*	R557	**RG206220**	Carbon Resistor (chip)	2.2K 1/4 J				
	R558	**RG007180**	Carbon Resistor (chip)	18K 0.1 J				
	R559	**RG005220**	Carbon Resistor (chip)	220 0.1 J				
	R560	**RG006470**	Carbon Resistor (chip)	4.7K 0.1 J				
	R561	**RG007100**	Carbon Resistor (chip)	10K 0.1 J				
	R562	**RG004100**	Carbon Resistor (chip)	10 0.1 J				
	R563	**RG008220**	Carbon Resistor (chip)	220K 0.1 J				
	R564	**RG007180**	Carbon Resistor (chip)	18K 0.1 J				
	-569	**RG007180**	Carbon Resistor (chip)	18K 0.1 J				
*	R570	**RG007360**	Carbon Resistor (chip)	36K 0.1 J				
*	R571	**RG007360**	Carbon Resistor (chip)	36K 0.1 J				
	R572	**RG008100**	Carbon Resistor (chip)	100K 0.1 J				
	R573	**VV276800**	Flame Proof C. Resistor	100 1/4 J				01
*	R601	**RG005180**	Carbon Resistor (chip)	180 0.1 J				
	R602	**VV065300**	Metal Film Resistor	6.8K 1/4 F				01
	R603	**VV065300**	Metal Film Resistor	6.8K 1/4 F				01
*	R604	**RF358100**	Carbon Resistor (chip)	100.0K : D 1608				01
*	R605	**RF358100**	Carbon Resistor (chip)	100.0K : D 1608				01
	R606	**RG007100**	Carbon Resistor (chip)	10K 0.1 J				
	R607	**RF357100**	Carbon Resistor (chip)	10.0K : D 1608				01
*	R608	**RF356110**	Carbon Resistor (chip)	1.1K : D 1608				
	R609	**RF357100**	Carbon Resistor (chip)	10.0K : D 1608				01
*	R610	**RF358100**	Carbon Resistor (chip)	100.0K : D 1608				01
*	R611	**RF358100**	Carbon Resistor (chip)	100.0K : D 1608				01
	R612	**RG007220**	Carbon Resistor (chip)	22K 0.1 J				
	R613	**RG006470**	Carbon Resistor (chip)	4.7K 0.1 J				

*: New Parts

RANK: Japan only

	REF NO.	PART NO.	DESCRIPTION			REMARKS	QTY	RANK
*	R614	**RF358100**	Carbon Resistor (chip)	100.0K : D 1608				01
*	R615	**RF358100**	Carbon Resistor (chip)	100.0K : D 1608				01
	R616	**RG004100**	Carbon Resistor (chip)	10 0.1 J				
*	R617	**RF356220**	Carbon Resistor (chip)	2.2K : D 1608				01
*	R618	**RF356820**	Carbon Resistor (chip)	8.2K : D 1608				
*	R619	**RF354200**	Carbon Resistor (chip)	20.0 : D 1608				01
*	R620	**RF357240**	Carbon Resistor (chip)	24.0K : D 1608				
*	R621	**RF356220**	Carbon Resistor (chip)	2.2K : D 1608				01
*	R622	**RF356820**	Carbon Resistor (chip)	8.2K : D 1608				
*	R623	**RF357240**	Carbon Resistor (chip)	24.0K : D 1608				
	R624	**RG004100**	Carbon Resistor (chip)	10 0.1 J				
*	R625	**RF356470**	Carbon Resistor (chip)	4.7K : D 1608				01
*	R626	**RF356470**	Carbon Resistor (chip)	4.7K : D 1608				01
	R627	**RG008220**	Carbon Resistor (chip)	220K 0.1 J				
*	R628	**RG007150**	Carbon Resistor (chip)	15K 0.1 J				
	R629	**RG007300**	Carbon Resistor (chip)	30K 0.1 J				
	R630	**RG004100**	Carbon Resistor (chip)	10 0.1 J				
	R631	**RG008220**	Carbon Resistor (chip)	220K 0.1 J				
	R632	**RG008220**	Carbon Resistor (chip)	220K 0.1 J				
	R633	**RG007100**	Carbon Resistor (chip)	10K 0.1 J				
	R634	**RG006470**	Carbon Resistor (chip)	4.7K 0.1 J				
	R635	**RG007330**	Carbon Resistor (chip)	33K 0.1 J				
	R636	**RG007100**	Carbon Resistor (chip)	10K 0.1 J				
	R637	**RG006560**	Carbon Resistor (chip)	5.6K 0.1 J				
	R638	**RG006470**	Carbon Resistor (chip)	4.7K 0.1 J				
	R639	**RG006820**	Carbon Resistor (chip)	8.2K 0.1 J				
	R640	**RG006470**	Carbon Resistor (chip)	4.7K 0.1 J				
	R641	**RG006820**	Carbon Resistor (chip)	8.2K 0.1 J				
	R642	**RG004100**	Carbon Resistor (chip)	10 0.1 J				
	R643	**RG008220**	Carbon Resistor (chip)	220K 0.1 J				
	R644	**RG006560**	Carbon Resistor (chip)	5.6K 0.1 J				
	-646	**RG006560**	Carbon Resistor (chip)	5.6K 0.1 J				
	R647	**RG007560**	Carbon Resistor (chip)	56K 0.1 J				
	R648	**RG007330**	Carbon Resistor (chip)	33K 0.1 J				
	R649	**RG006560**	Carbon Resistor (chip)	5.6K 0.1 J				
	R650	**RG008220**	Carbon Resistor (chip)	220K 0.1 J				
	R651	**RG005220**	Carbon Resistor (chip)	220 0.1 J				
	R652	**RG007120**	Carbon Resistor (chip)	12K 0.1 J				
	R653	**RG006330**	Carbon Resistor (chip)	3.3K 0.1 J				
	R654	**RG007330**	Carbon Resistor (chip)	33K 0.1 J				
	R655	**RG008100**	Carbon Resistor (chip)	100K 0.1 J				
	R656	**RG005220**	Carbon Resistor (chip)	220 0.1 J				
*	R657	**RG206220**	Carbon Resistor (chip)	2.2K 1/4 J				
	R658	**RG007180**	Carbon Resistor (chip)	18K 0.1 J				
	R659	**RG005220**	Carbon Resistor (chip)	220 0.1 J				
	R660	**RG006470**	Carbon Resistor (chip)	4.7K 0.1 J				
	R661	**RG007100**	Carbon Resistor (chip)	10K 0.1 J				
	R662	**RG004100**	Carbon Resistor (chip)	10 0.1 J				
	R663	**RG008220**	Carbon Resistor (chip)	220K 0.1 J				
	R664	**RG007180**	Carbon Resistor (chip)	18K 0.1 J				
	-669	**RG007180**	Carbon Resistor (chip)	18K 0.1 J				
*	R670	**RG007360**	Carbon Resistor (chip)	36K 0.1 J				
*	R671	**RG007360**	Carbon Resistor (chip)	36K 0.1 J				
*	R701	**RG005180**	Carbon Resistor (chip)	180 0.1 J				
	R702	**VV065300**	Metal Film Resistor	6.8K 1/4 F				01
	R703	**VV065300**	Metal Film Resistor	6.8K 1/4 F				01
*	R704	**RF358100**	Carbon Resistor (chip)	100.0K : D 1608				01
*	R705	**RF358100**	Carbon Resistor (chip)	100.0K : D 1608				01
	R706	**RG007100**	Carbon Resistor (chip)	10K 0.1 J				
	R707	**RF357100**	Carbon Resistor (chip)	10.0K : D 1608				01
*	R708	**RF356110**	Carbon Resistor (chip)	1.1K : D 1608				
	R709	**RF357100**	Carbon Resistor (chip)	10.0K : D 1608				01
*	R710	**RF358100**	Carbon Resistor (chip)	100.0K : D 1608				01
*	R711	**RF358100**	Carbon Resistor (chip)	100.0K : D 1608				01
	R712	**RG007220**	Carbon Resistor (chip)	22K 0.1 J				
	R713	**RG006470**	Carbon Resistor (chip)	4.7K 0.1 J				
*	R714	**RF358100**	Carbon Resistor (chip)	100.0K : D 1608				01
*	R715	**RF358100**	Carbon Resistor (chip)	100.0K : D 1608				01
	R716	**RG004100**	Carbon Resistor (chip)	10 0.1 J				
*	R717	**RF356220**	Carbon Resistor (chip)	2.2K : D 1608				01

✻: New Parts

RANK: Japan only

	REF NO.	PART NO.	DESCRIPTION			REMARKS	QTY	RANK
*	R718	**RF356820**	Carbon Resistor (chip)	8.2K : D 1608				
*	R719	**RF354200**	Carbon Resistor (chip)	20.0 : D 1608				01
*	R720	**RF357240**	Carbon Resistor (chip)	24.0K : D 1608				
*	R721	**RF356220**	Carbon Resistor (chip)	2.2K : D 1608				01
*	R722	**RF356820**	Carbon Resistor (chip)	8.2K : D 1608				
*	R723	**RF357240**	Carbon Resistor (chip)	24.0K : D 1608				
	R724	**RG004100**	Carbon Resistor (chip)	10 0.1 J				
*	R725	**RF356470**	Carbon Resistor (chip)	4.7K : D 1608				01
*	R726	**RF356470**	Carbon Resistor (chip)	4.7K : D 1608				01
	R727	**RG008220**	Carbon Resistor (chip)	220K 0.1 J				
*	R728	**RG007150**	Carbon Resistor (chip)	15K 0.1 J				
	R729	**RG007300**	Carbon Resistor (chip)	30K 0.1 J				
	R730	**RG004100**	Carbon Resistor (chip)	10 0.1 J				
	R731	**RG008220**	Carbon Resistor (chip)	220K 0.1 J				
	R732	**RG008220**	Carbon Resistor (chip)	220K 0.1 J				
	R733	**RG007100**	Carbon Resistor (chip)	10K 0.1 J				
	R734	**RG006470**	Carbon Resistor (chip)	4.7K 0.1 J				
	R735	**RG007330**	Carbon Resistor (chip)	33K 0.1 J				
	R736	**RG007100**	Carbon Resistor (chip)	10K 0.1 J				
	R737	**RG006560**	Carbon Resistor (chip)	5.6K 0.1 J				
	R738	**RG006470**	Carbon Resistor (chip)	4.7K 0.1 J				
	R739	**RG006820**	Carbon Resistor (chip)	8.2K 0.1 J				
	R740	**RG006470**	Carbon Resistor (chip)	4.7K 0.1 J				
	R741	**RG006820**	Carbon Resistor (chip)	8.2K 0.1 J				
	R742	**RG004100**	Carbon Resistor (chip)	10 0.1 J				
	R743	**RG008220**	Carbon Resistor (chip)	220K 0.1 J				
	R744	**RG006560**	Carbon Resistor (chip)	5.6K 0.1 J				
	-746	**RG006560**	Carbon Resistor (chip)	5.6K 0.1 J				
	R747	**RG007560**	Carbon Resistor (chip)	56K 0.1 J				
	R748	**RG007330**	Carbon Resistor (chip)	33K 0.1 J				
	R749	**RG006560**	Carbon Resistor (chip)	5.6K 0.1 J				
	R750	**RG008220**	Carbon Resistor (chip)	220K 0.1 J				
	R751	**RG005220**	Carbon Resistor (chip)	220 0.1 J				
	R752	**RG007120**	Carbon Resistor (chip)	12K 0.1 J				
	R753	**RG006330**	Carbon Resistor (chip)	3.3K 0.1 J				
	R754	**RG007330**	Carbon Resistor (chip)	33K 0.1 J				
	R755	**RG008100**	Carbon Resistor (chip)	100K 0.1 J				
	R756	**RG005220**	Carbon Resistor (chip)	220 0.1 J				
*	R757	**RG206220**	Carbon Resistor (chip)	2.2K 1/4 J				
	R758	**RG007180**	Carbon Resistor (chip)	18K 0.1 J				
	R759	**RG005220**	Carbon Resistor (chip)	220 0.1 J				
	R760	**RG006470**	Carbon Resistor (chip)	4.7K 0.1 J				
	R761	**RG007100**	Carbon Resistor (chip)	10K 0.1 J				
	R762	**RG004100**	Carbon Resistor (chip)	10 0.1 J				
	R763	**RG008220**	Carbon Resistor (chip)	220K 0.1 J				
	R764	**RG007180**	Carbon Resistor (chip)	18K 0.1 J				
	-769	**RG007180**	Carbon Resistor (chip)	18K 0.1 J				
*	R770	**RG007360**	Carbon Resistor (chip)	36K 0.1 J				
*	R771	**RG007360**	Carbon Resistor (chip)	36K 0.1 J				
*	R801	**RG005180**	Carbon Resistor (chip)	180 0.1 J				
	R802	**VV065300**	Metal Film Resistor	6.8K 1/4 F				01
	R803	**VV065300**	Metal Film Resistor	6.8K 1/4 F				01
*	R804	**RF358100**	Carbon Resistor (chip)	100.0K : D 1608				01
*	R805	**RF358100**	Carbon Resistor (chip)	100.0K : D 1608				01
	R806	**RG007100**	Carbon Resistor (chip)	10K 0.1 J				
	R807	**RF357100**	Carbon Resistor (chip)	10.0K : D 1608				01
*	R808	**RF356110**	Carbon Resistor (chip)	1.1K : D 1608				
	R809	**RF357100**	Carbon Resistor (chip)	10.0K : D 1608				01
*	R810	**RF358100**	Carbon Resistor (chip)	100.0K : D 1608				01
*	R811	**RF358100**	Carbon Resistor (chip)	100.0K : D 1608				01
	R812	**RG007220**	Carbon Resistor (chip)	22K 0.1 J				
	R813	**RG006470**	Carbon Resistor (chip)	4.7K 0.1 J				
*	R814	**RF358100**	Carbon Resistor (chip)	100.0K : D 1608				01
*	R815	**RF358100**	Carbon Resistor (chip)	100.0K : D 1608				01
	R816	**RG004100**	Carbon Resistor (chip)	10 0.1 J				
*	R817	**RF356220**	Carbon Resistor (chip)	2.2K : D 1608				01
*	R818	**RF356820**	Carbon Resistor (chip)	8.2K : D 1608				
*	R819	**RF354200**	Carbon Resistor (chip)	20.0 : D 1608				01
*	R820	**RF357240**	Carbon Resistor (chip)	24.0K : D 1608				
*	R821	**RF356220**	Carbon Resistor (chip)	2.2K : D 1608				01

*: New Parts

RANK: Japan only

	REF NO.	PART NO.	DESCRIPTION			REMARKS	QTY	RANK
*	R822	**RF356820**	Carbon Resistor (chip)	8.2K : D 1608				
*	R823	**RF357240**	Carbon Resistor (chip)	24.0K : D 1608				
	R824	**RG004100**	Carbon Resistor (chip)	10 0.1 J				
*	R825	**RF356470**	Carbon Resistor (chip)	4.7K : D 1608				01
*	R826	**RF356470**	Carbon Resistor (chip)	4.7K : D 1608				01
	R827	**RG008220**	Carbon Resistor (chip)	220K 0.1 J				
*	R828	**RG007150**	Carbon Resistor (chip)	15K 0.1 J				
	R829	**RG007300**	Carbon Resistor (chip)	30K 0.1 J				
	R830	**RG004100**	Carbon Resistor (chip)	10 0.1 J				
	R831	**RG008220**	Carbon Resistor (chip)	220K 0.1 J				
	R832	**RG008220**	Carbon Resistor (chip)	220K 0.1 J				
	R833	**RG007100**	Carbon Resistor (chip)	10K 0.1 J				
	R834	**RG006470**	Carbon Resistor (chip)	4.7K 0.1 J				
	R835	**RG007330**	Carbon Resistor (chip)	33K 0.1 J				
	R836	**RG007100**	Carbon Resistor (chip)	10K 0.1 J				
	R837	**RG006560**	Carbon Resistor (chip)	5.6K 0.1 J				
	R838	**RG006470**	Carbon Resistor (chip)	4.7K 0.1 J				
	R839	**RG006820**	Carbon Resistor (chip)	8.2K 0.1 J				
	R840	**RG006470**	Carbon Resistor (chip)	4.7K 0.1 J				
	R841	**RG006820**	Carbon Resistor (chip)	8.2K 0.1 J				
	R842	**RG004100**	Carbon Resistor (chip)	10 0.1 J				
	R843	**RG008220**	Carbon Resistor (chip)	220K 0.1 J				
	R844	**RG006560**	Carbon Resistor (chip)	5.6K 0.1 J				
	-846	**RG006560**	Carbon Resistor (chip)	5.6K 0.1 J				
	R847	**RG007560**	Carbon Resistor (chip)	56K 0.1 J				
	R848	**RG007330**	Carbon Resistor (chip)	33K 0.1 J				
	R849	**RG006560**	Carbon Resistor (chip)	5.6K 0.1 J				
	R850	**RG008220**	Carbon Resistor (chip)	220K 0.1 J				
	R851	**RG005220**	Carbon Resistor (chip)	220 0.1 J				
	R852	**RG007120**	Carbon Resistor (chip)	12K 0.1 J				
	R853	**RG006330**	Carbon Resistor (chip)	3.3K 0.1 J				
	R854	**RG007330**	Carbon Resistor (chip)	33K 0.1 J				
	R855	**RG008100**	Carbon Resistor (chip)	100K 0.1 J				
	R856	**RG005220**	Carbon Resistor (chip)	220 0.1 J				
*	R857	**RG206220**	Carbon Resistor (chip)	2.2K 1/4 J				
	R858	**RG007180**	Carbon Resistor (chip)	18K 0.1 J				
	R859	**RG005220**	Carbon Resistor (chip)	220 0.1 J				
	R860	**RG006470**	Carbon Resistor (chip)	4.7K 0.1 J				
	R861	**RG007100**	Carbon Resistor (chip)	10K 0.1 J				
	R862	**RG004100**	Carbon Resistor (chip)	10 0.1 J				
	R863	**RG008220**	Carbon Resistor (chip)	220K 0.1 J				
	R864	**RG007180**	Carbon Resistor (chip)	18K 0.1 J				
	-869	**RG007180**	Carbon Resistor (chip)	18K 0.1 J				
*	R870	**RG007360**	Carbon Resistor (chip)	36K 0.1 J				
*	R871	**RG007360**	Carbon Resistor (chip)	36K 0.1 J				
	R872	**RG007120**	Carbon Resistor (chip)	12K 0.1 J				
	R873	**RG006150**	Carbon Resistor (chip)	1.5K 0.1 J				
	R874	**RG205100**	Carbon Resistor (chip)	100 1/4 J				
*	R901	**RG206270**	Carbon Resistor (chip)	2.7K 1/4 J				
	RJ01	**RG000000**	Carbon Resistor (chip)	0 0.1 J				
	-15	**RG000000**	Carbon Resistor (chip)	0 0.1 J				
	SW101	**V6962600**	Push Switch			26dB(CH1)		02
	SW102	**V6962600**	Push Switch			/$\overline{80}$ (CH1)		02
	SW103	**V6962600**	Push Switch			CH ON(CH1)		02
	SW104	**V6962600**	Push Switch			AUX1 POST(CH1)		02
	SW105	**V6962600**	Push Switch			AUX2 POST(CH1)		02
	SW106	**V6962600**	Push Switch			PFL(CH1)		02
	SW201	**V6962600**	Push Switch			26dB(CH2)		02
	SW202	**V6962600**	Push Switch			/$\overline{80}$ (CH2)		02
	SW203	**V6962600**	Push Switch			CH ON(CH2)		02
	SW204	**V6962600**	Push Switch			AUX1 POST(CH2)		02
	SW205	**V6962600**	Push Switch			AUX2 POST(CH2)		02
	SW206	**V6962600**	Push Switch			PFL(CH2)		02
	SW301	**V6962600**	Push Switch			26dB(CH3)		02
	SW302	**V6962600**	Push Switch			/$\overline{80}$ (CH3)		02
	SW303	**V6962600**	Push Switch			CH ON(CH3)		02
	SW304	**V6962600**	Push Switch			AUX1 POST(CH3)		02
	SW305	**V6962600**	Push Switch			AUX2 POST(CH3)		02
	SW306	**V6962600**	Push Switch			PFL(CH3)		02
	SW401	**V6962600**	Push Switch			26dB(CH4)		02

✻: New Parts

RANK: Japan only

REF NO.	PART NO.	DESCRIPTION			REMARKS	QTY	RANK
SW402	**V6962600**	Push Switch			/80 (CH4)		02
SW403	**V6962600**	Push Switch			CH ON(CH4)		02
SW404	**V6962600**	Push Switch			AUX1 POST(CH4)		02
SW405	**V6962600**	Push Switch			AUX2 POST(CH4)		02
SW406	**V6962600**	Push Switch			PFL(CH4)		02
SW501	**V6962600**	Push Switch			26dB(CH5)		02
SW502	**V6962600**	Push Switch			/80 (CH5)		02
SW503	**V6962600**	Push Switch			CH ON(CH5)		02
SW504	**V6962600**	Push Switch			AUX1 POST(CH5)		02
SW505	**V6962600**	Push Switch			AUX2 POST(CH5)		02
SW506	**V6962600**	Push Switch			PFL(CH5)		02
SW601	**V6962600**	Push Switch			26dB(CH6)		02
SW602	**V6962600**	Push Switch			/80 (CH6)		02
SW603	**V6962600**	Push Switch			CH ON(CH6)		02
SW604	**V6962600**	Push Switch			AUX1 POST(CH6)		02
SW605	**V6962600**	Push Switch			AUX2 POST(CH6)		02
SW606	**V6962600**	Push Switch			PFL(CH6)		02
SW701	**V6962600**	Push Switch			26dB(CH7)		02
SW702	**V6962600**	Push Switch			/80 (CH7)		02
SW703	**V6962600**	Push Switch			CH ON(CH7)		02
SW704	**V6962600**	Push Switch			AUX1 POST(CH7)		02
SW705	**V6962600**	Push Switch			AUX2 POST(CH7)		02
SW706	**V6962600**	Push Switch			PFL(CH7)		02
SW801	**V6962600**	Push Switch			26dB(CH8)		02
SW802	**V6962600**	Push Switch			/80 (CH8)		02
SW803	**V6962600**	Push Switch			CH ON(CH8)		02
SW804	**V6962600**	Push Switch			AUX1 POST(CH8)		02
SW805	**V6962600**	Push Switch			AUX2 POST(CH8)		02
SW806	**V6962600**	Push Switch			PFL(CH8)		02
SW901	**V2802400**	Slide Switch	SS001-P022BQB-PA14		PHANTOM ON/OFF		03
* VR101	**V8393200**	Rotary Variable Resistor	RD 5.0K XV09213P		GAIN(CH1)		
* VR102	**V8264700**	Rotary Variable Resistor	B 50.0K XV09213P		LOW(CH1)		01
* VR103	**V8264700**	Rotary Variable Resistor	B 50.0K XV09213P		HIGH(CH1)		01
VR104	**VZ611200**	Rotary Variable Resistor	C 100K RK12L123		MID-f(CH1)		05
* VR105	**V8393300**	Rotary Variable Resistor	W 20.0K XV09213P		MID(CH1)		
VR106	**VU804100**	Slide Variable Resistor	RS6011YG6036-10KA		FADER(CH1)		04
VR107	**VZ610800**	Rotary Variable Resistor	AC 20K RK12L123		PAN(CH1)		03
* VR108	**V8264600**	Rotary Variable Resistor	A 20.0K XV09213P		AUX1(CH1)		01
* VR109	**V8264600**	Rotary Variable Resistor	A 20.0K XV09213P		AUX2(CH1)		01
* VR110	**V8264600**	Rotary Variable Resistor	A 20.0K XV09213P		EFFECT1(CH1)		01
* VR111	**V8264600**	Rotary Variable Resistor	A 20.0K XV09213P		EFFECT2(CH1)		01
* VR201	**V8393200**	Rotary Variable Resistor	RD 5.0K XV09213P		GAIN(CH2)		
* VR202	**V8264700**	Rotary Variable Resistor	B 50.0K XV09213P		LOW(CH2)		01
* VR203	**V8264700**	Rotary Variable Resistor	B 50.0K XV09213P		HIGH(CH2)		01
VR204	**VZ611200**	Rotary Variable Resistor	C 100K RK12L123		MID-f(CH2)		05
* VR205	**V8393300**	Rotary Variable Resistor	W 20.0K XV09213P		MID(CH2)		
VR206	**VU804100**	Slide Variable Resistor	RS6011YG6036-10KA		FADER(CH2)		04
VR207	**VZ610800**	Rotary Variable Resistor	AC 20K RK12L123		PAN(CH2)		03
* VR208	**V8264600**	Rotary Variable Resistor	A 20.0K XV09213P		AUX1(CH2)		01
* VR209	**V8264600**	Rotary Variable Resistor	A 20.0K XV09213P		AUX2(CH2)		01
* VR210	**V8264600**	Rotary Variable Resistor	A 20.0K XV09213P		EFFECT1(CH2)		01
* VR211	**V8264600**	Rotary Variable Resistor	A 20.0K XV09213P		EFFECT2(CH2)		01
* VR301	**V8393200**	Rotary Variable Resistor	RD 5.0K XV09213P		GAIN(CH3)		
* VR302	**V8264700**	Rotary Variable Resistor	B 50.0K XV09213P		LOW(CH3)		01
* VR303	**V8264700**	Rotary Variable Resistor	B 50.0K XV09213P		HIGH(CH3)		01
VR304	**VZ611200**	Rotary Variable Resistor	C 100K RK12L123		MID-f(CH3)		05
* VR305	**V8393300**	Rotary Variable Resistor	W 20.0K XV09213P		MID(CH3)		
VR306	**VU804100**	Slide Variable Resistor	RS6011YG6036-10KA		FADER(CH3)		04
VR307	**VZ610800**	Rotary Variable Resistor	AC 20K RK12L123		PAN(CH3)		03
* VR308	**V8264600**	Rotary Variable Resistor	A 20.0K XV09213P		AUX1(CH3)		01
* VR309	**V8264600**	Rotary Variable Resistor	A 20.0K XV09213P		AUX2(CH3)		01
* VR310	**V8264600**	Rotary Variable Resistor	A 20.0K XV09213P		EFFECT1(CH3)		01
* VR311	**V8264600**	Rotary Variable Resistor	A 20.0K XV09213P		EFFECT2(CH3)		01
* VR401	**V8393200**	Rotary Variable Resistor	RD 5.0K XV09213P		GAIN(CH4)		
* VR402	**V8264700**	Rotary Variable Resistor	B 50.0K XV09213P		LOW(CH4)		01
* VR403	**V8264700**	Rotary Variable Resistor	B 50.0K XV09213P		HIGH(CH4)		01
VR404	**VZ611200**	Rotary Variable Resistor	C 100K RK12L123		MID-f(CH4)		05
* VR405	**V8393300**	Rotary Variable Resistor	W 20.0K XV09213P		MID(CH4)		
VR406	**VU804100**	Slide Variable Resistor	RS6011YG6036-10KA		FADER(CH4)		04
VR407	**VZ610800**	Rotary Variable Resistor	AC 20K RK12L123		PAN(CH4)		03

*: New Parts

RANK: Japan only

	REF NO.	PART NO.	DESCRIPTION			REMARKS	QTY	RANK
*	VR408	**V8264600**	Rotary Variable Resistor	A 20.0K XV09213P		AUX1(CH4)		01
*	VR409	**V8264600**	Rotary Variable Resistor	A 20.0K XV09213P		AUX2(CH4)		01
*	VR410	**V8264600**	Rotary Variable Resistor	A 20.0K XV09213P		EFFECT1(CH4)		01
*	VR411	**V8264600**	Rotary Variable Resistor	A 20.0K XV09213P		EFFECT2(CH4)		01
*	VR501	**V8393200**	Rotary Variable Resistor	RD 5.0K XV09213P		GAIN(CH5)		
*	VR502	**V8264700**	Rotary Variable Resistor	B 50.0K XV09213P		LOW(CH5)		01
*	VR503	**V8264700**	Rotary Variable Resistor	B 50.0K XV09213P		HIGH(CH5)		01
	VR504	**VZ611200**	Rotary Variable Resistor	C 100K RK12L123		MID-f(CH5)		05
*	VR505	**V8393300**	Rotary Variable Resistor	W 20.0K XV09213P		MID(CH5)		
	VR506	**VU804100**	Slide Variable Resistor	RS6011YG6036-10KA		FADER(CH5)		04
	VR507	**VZ610800**	Rotary Variable Resistor	AC 20K RK12L123		PAN(CH5)		03
*	VR508	**V8264600**	Rotary Variable Resistor	A 20.0K XV09213P		AUX1(CH5)		01
*	VR509	**V8264600**	Rotary Variable Resistor	A 20.0K XV09213P		AUX2(CH5)		01
*	VR510	**V8264600**	Rotary Variable Resistor	A 20.0K XV09213P		EFFECT1(CH5)		01
*	VR511	**V8264600**	Rotary Variable Resistor	A 20.0K XV09213P		EFFECT2(CH5)		01
*	VR601	**V8393200**	Rotary Variable Resistor	RD 5.0K XV09213P		GAIN(CH6)		
*	VR602	**V8264700**	Rotary Variable Resistor	B 50.0K XV09213P		LOW(CH6)		01
*	VR603	**V8264700**	Rotary Variable Resistor	B 50.0K XV09213P		HIGH(CH6)		01
	VR604	**VZ611200**	Rotary Variable Resistor	C 100K RK12L123		MID-f(CH6)		05
*	VR605	**V8393300**	Rotary Variable Resistor	W 20.0K XV09213P		MID(CH6)		
	VR606	**VU804100**	Slide Variable Resistor	RS6011YG6036-10KA		FADER(CH6)		04
	VR607	**VZ610800**	Rotary Variable Resistor	AC 20K RK12L123		PAN(CH6)		03
*	VR608	**V8264600**	Rotary Variable Resistor	A 20.0K XV09213P		AUX1(CH6)		01
*	VR609	**V8264600**	Rotary Variable Resistor	A 20.0K XV09213P		AUX2(CH6)		01
*	VR610	**V8264600**	Rotary Variable Resistor	A 20.0K XV09213P		EFFECT1(CH6)		01
*	VR611	**V8264600**	Rotary Variable Resistor	A 20.0K XV09213P		EFFECT2(CH6)		01
*	VR701	**V8393200**	Rotary Variable Resistor	RD 5.0K XV09213P		GAIN(CH7)		
*	VR702	**V8264700**	Rotary Variable Resistor	B 50.0K XV09213P		LOW(CH7)		01
*	VR703	**V8264700**	Rotary Variable Resistor	B 50.0K XV09213P		HIGH(CH7)		01
	VR704	**VZ611200**	Rotary Variable Resistor	C 100K RK12L123		MID-f(CH7)		05
*	VR705	**V8393300**	Rotary Variable Resistor	W 20.0K XV09213P		MID(CH7)		
	VR706	**VU804100**	Slide Variable Resistor	RS6011YG6036-10KA		FADER(CH7)		04
	VR707	**VZ610800**	Rotary Variable Resistor	AC 20K RK12L123		PAN(CH7)		03
*	VR708	**V8264600**	Rotary Variable Resistor	A 20.0K XV09213P		AUX1(CH7)		01
*	VR709	**V8264600**	Rotary Variable Resistor	A 20.0K XV09213P		AUX2(CH7)		01
*	VR710	**V8264600**	Rotary Variable Resistor	A 20.0K XV09213P		EFFECT1(CH7)		01
*	VR711	**V8264600**	Rotary Variable Resistor	A 20.0K XV09213P		EFFECT2(CH7)		01
*	VR801	**V8393200**	Rotary Variable Resistor	RD 5.0K XV09213P		GAIN(CH8)		
*	VR802	**V8264700**	Rotary Variable Resistor	B 50.0K XV09213P		LOW(CH8)		01
*	VR803	**V8264700**	Rotary Variable Resistor	B 50.0K XV09213P		HIGH(CH8)		01
	VR804	**VZ611200**	Rotary Variable Resistor	C 100K RK12L123		MID-f(CH8)		05
*	VR805	**V8393300**	Rotary Variable Resistor	W 20.0K XV09213P		MID(CH8)		
	VR806	**VU804100**	Slide Variable Resistor	RS6011YG6036-10KA		FADER(CH8)		04
	VR807	**VZ610800**	Rotary Variable Resistor	AC 20K RK12L123		PAN(CH8)		03
*	VR808	**V8264600**	Rotary Variable Resistor	A 20.0K XV09213P		AUX1(CH8)		01
*	VR809	**V8264600**	Rotary Variable Resistor	A 20.0K XV09213P		AUX2(CH8)		01
*	VR810	**V8264600**	Rotary Variable Resistor	A 20.0K XV09213P		EFFECT1(CH8)		01
*	VR811	**V8264600**	Rotary Variable Resistor	A 20.0K XV09213P		EFFECT2(CH8)		01
	ZD101	**VU171800**	Zener Diode	UDZ 4.7BTE-17 4.7V				01
	ZD201	**VU171800**	Zener Diode	UDZ 4.7BTE-17 4.7V				01
	ZD301	**VU171800**	Zener Diode	UDZ 4.7BTE-17 4.7V				01
	ZD401	**VU171800**	Zener Diode	UDZ 4.7BTE-17 4.7V				01
	ZD501	**VU171800**	Zener Diode	UDZ 4.7BTE-17 4.7V				01
	ZD601	**VU171800**	Zener Diode	UDZ 4.7BTE-17 4.7V				01
	ZD701	**VU171800**	Zener Diode	UDZ 4.7BTE-17 4.7V				01
	ZD801	**VU171800**	Zener Diode	UDZ 4.7BTE-17 4.7V				01
*		**V9093100**	Cirsuit Board	IN16		EMX5000-20 (X0655B0)		
		V4467500	Button	CD-GRAY/WHITE		PLF(CH9-16),AUX1(CH9-16)	40	01
						AUX2(CH9-16),GAIN 0dB(CH9	40	01
						-16),GAIN 26dB(CH9-16)	40	01
		VV307300	LED Spacer				25	01
		VZ968600	Button	NO.947 CD-GRAY		CH ON(CH9-16)	8	01
		--	Jumper Wire	0.60		(VV29140)	319	01
		--	Jumper Wire	0.60 TP		(V829020)	21	
	C101	**VV488800**	Electrolytic Cap.-LLM	10.00 50.0V				01
	C102	**VV488800**	Electrolytic Cap.-LLM	10.00 50.0V				01
	C103	**UR847100**	Electrolytic Cap.	10.00 25.0V				01
	C104	**UR847100**	Electrolytic Cap.	10.00 25.0V				01
*	C105	**UX062820**	Ceramic Capacitor (Chip)	820P 50V K				

✻: New Parts

RANK: Japan only

	REF NO.	PART NO.	DESCRIPTION			REMARKS	QTY	RANK
*	-107	**UX062820**	Ceramic Capacitor (Chip)	820P 50V K				
	C108	**UX061100**	Ceramic Capacitor (Chip)	10P 50V D				01
	C109	**UR828470**	Electrolytic Cap.	470.00 10.0V				01
*	C110	**UX062820**	Ceramic Capacitor (Chip)	820P 50V K				
	C111	**UX061100**	Ceramic Capacitor (Chip)	10P 50V D				01
	C112	**UX062470**	Ceramic Capacitor (Chip)	470P 50V J				
	C113	**UX061330**	Ceramic Capacitor (Chip)	33P 50V J				
	C114	**UR847100**	Electrolytic Cap.	10.00 25.0V				01
	C115	**VZ597300**	Mylar Capacitor	0.091 50V J				01
	C116	**VZ597300**	Mylar Capacitor	0.091 50V J				01
	C117	**UX062100**	Ceramic Capacitor (Chip)	100P 50V J				01
	C118	**UR847100**	Electrolytic Cap.	10.00 25.0V				01
	C119	**UR847100**	Electrolytic Cap.	10.00 25.0V				01
	C120	**UA954390**	Mylar Capacitor	0.0390 50V J				01
	C121	**VV190000**	Mylar Capacitor	820P 50V J				01
	C122	**UX061470**	Ceramic Capacitor (Chip)	47P 50V J				
	C123	**UX062100**	Ceramic Capacitor (Chip)	100P 50V J				01
	C124	**UA953390**	Mylar Capacitor	3900P 50V J				01
	C125	**UX062100**	Ceramic Capacitor (Chip)	100P 50V J				01
	C126	**UA954100**	Mylar Capacitor	0.0100 50V J				01
	C127	**UX061220**	Ceramic Capacitor (Chip)	22P 50V J				01
	C128	**UR847470**	Electrolytic Cap.	47.00 25.0V				01
	C129	**UR847100**	Electrolytic Cap.	10.00 25.0V				01
	C130	**UX063100**	Ceramic Capacitor (Chip)	1000P 50V K				01
	C131	**UR866470**	Electrolytic Cap.	4.70 50.0V				01
	C132	**UX062100**	Ceramic Capacitor (Chip)	100P 50V J				01
	-134	**UX062100**	Ceramic Capacitor (Chip)	100P 50V J				01
	C135	**UR847470**	Electrolytic Cap.	47.00 25.0V				01
	C136	**UR866470**	Electrolytic Cap.	4.70 50.0V				01
	C137	**UR847100**	Electrolytic Cap.	10.00 25.0V				01
	C138	**UX062100**	Ceramic Capacitor (Chip)	100P 50V J				01
	C139	**UX062100**	Ceramic Capacitor (Chip)	100P 50V J				01
	C140	**UX061470**	Ceramic Capacitor (Chip)	47P 50V J				
	C141	**UR847470**	Electrolytic Cap.	47.00 25.0V				01
	C142	**UR877100**	Electrolytic Cap.	10.00 63.0V				01
	C143	**UX064100**	Ceramic Capacitor (Chip)	0.0100 50V K				01
	-156	**UX064100**	Ceramic Capacitor (Chip)	0.0100 50V K				01
	C201	**VV488800**	Electrolytic Cap.-LLM	10.00 50.0V				01
	C202	**VV488800**	Electrolytic Cap.-LLM	10.00 50.0V				01
	C203	**UR847100**	Electrolytic Cap.	10.00 25.0V				01
	C204	**UR847100**	Electrolytic Cap.	10.00 25.0V				01
*	C205	**UX062820**	Ceramic Capacitor (Chip)	820P 50V K				
*	-207	**UX062820**	Ceramic Capacitor (Chip)	820P 50V K				
	C208	**UX061100**	Ceramic Capacitor (Chip)	10P 50V D				01
	C209	**UR828470**	Electrolytic Cap.	470.00 10.0V				01
*	C210	**UX062820**	Ceramic Capacitor (Chip)	820P 50V K				
	C211	**UX061100**	Ceramic Capacitor (Chip)	10P 50V D				01
	C212	**UX062470**	Ceramic Capacitor (Chip)	470P 50V J				
	C213	**UX061330**	Ceramic Capacitor (Chip)	33P 50V J				
	C214	**UR847100**	Electrolytic Cap.	10.00 25.0V				01
	C215	**VZ597300**	Mylar Capacitor	0.091 50V J				01
	C216	**VZ597300**	Mylar Capacitor	0.091 50V J				01
	C217	**UX062100**	Ceramic Capacitor (Chip)	100P 50V J				01
	C218	**UR847100**	Electrolytic Cap.	10.00 25.0V				01
	C219	**UR847100**	Electrolytic Cap.	10.00 25.0V				01
	C220	**UA954390**	Mylar Capacitor	0.0390 50V J				01
	C221	**VV190000**	Mylar Capacitor	820P 50V J				01
	C222	**UX061470**	Ceramic Capacitor (Chip)	47P 50V J				
	C223	**UX062100**	Ceramic Capacitor (Chip)	100P 50V J				01
	C224	**UA953390**	Mylar Capacitor	3900P 50V J				01
	C225	**UX062100**	Ceramic Capacitor (Chip)	100P 50V J				01
	C226	**UA954100**	Mylar Capacitor	0.0100 50V J				01
	C227	**UX061220**	Ceramic Capacitor (Chip)	22P 50V J				01
	C228	**UR847470**	Electrolytic Cap.	47.00 25.0V				01
	C229	**UR847100**	Electrolytic Cap.	10.00 25.0V				01
	C230	**UX063100**	Ceramic Capacitor (Chip)	1000P 50V K				01
	C231	**UR866470**	Electrolytic Cap.	4.70 50.0V				01
	C232	**UX062100**	Ceramic Capacitor (Chip)	100P 50V J				01
	-234	**UX062100**	Ceramic Capacitor (Chip)	100P 50V J				01
	C235	**UR847470**	Electrolytic Cap.	47.00 25.0V				01

*: New Parts

RANK: Japan only

	REF NO.	PART NO.	DESCRIPTION			REMARKS	QTY	RANK
	C236	**UR866470**	Electrolytic Cap.	4.70 50.0V				01
	C237	**UR847100**	Electrolytic Cap.	10.00 25.0V				01
	C238	**UX062100**	Ceramic Capacitor (Chip)	100P 50V J				01
	C239	**UX062100**	Ceramic Capacitor (Chip)	100P 50V J				01
	C240	**UX061470**	Ceramic Capacitor (Chip)	47P 50V J				
	C241	**UR847470**	Electrolytic Cap.	47.00 25.0V				01
	C242	**UX064100**	Ceramic Capacitor (Chip)	0.0100 50V K				01
	C243	**UX064100**	Ceramic Capacitor (Chip)	0.0100 50V K				01
	C301	**VV488800**	Electrolytic Cap.-LLM	10.00 50.0V				01
	C302	**VV488800**	Electrolytic Cap.-LLM	10.00 50.0V				01
	C303	**UR847100**	Electrolytic Cap.	10.00 25.0V				01
	C304	**UR847100**	Electrolytic Cap.	10.00 25.0V				01
*	C305	**UX062820**	Ceramic Capacitor (Chip)	820P 50V K				
*	-307	**UX062820**	Ceramic Capacitor (Chip)	820P 50V K				
	C308	**UX061100**	Ceramic Capacitor (Chip)	10P 50V D				01
	C309	**UR828470**	Electrolytic Cap.	470.00 10.0V				01
*	C310	**UX062820**	Ceramic Capacitor (Chip)	820P 50V K				
	C311	**UX061100**	Ceramic Capacitor (Chip)	10P 50V D				01
	C312	**UX062470**	Ceramic Capacitor (Chip)	470P 50V J				
	C313	**UX061330**	Ceramic Capacitor (Chip)	33P 50V J				
	C314	**UR847100**	Electrolytic Cap.	10.00 25.0V				01
	C315	**VZ597300**	Mylar Capacitor	0.091 50V J				01
	C316	**VZ597300**	Mylar Capacitor	0.091 50V J				01
	C317	**UX062100**	Ceramic Capacitor (Chip)	100P 50V J				01
	C318	**UR847100**	Electrolytic Cap.	10.00 25.0V				01
	C319	**UR847100**	Electrolytic Cap.	10.00 25.0V				01
	C320	**UA954390**	Mylar Capacitor	0.0390 50V J				01
	C321	**VV190000**	Mylar Capacitor	820P 50V J				01
	C322	**UX061470**	Ceramic Capacitor (Chip)	47P 50V J				
	C323	**UX062100**	Ceramic Capacitor (Chip)	100P 50V J				01
	C324	**UA953390**	Mylar Capacitor	3900P 50V J				01
	C325	**UX062100**	Ceramic Capacitor (Chip)	100P 50V J				01
	C326	**UA954100**	Mylar Capacitor	0.0100 50V J				01
	C327	**UX061220**	Ceramic Capacitor (Chip)	22P 50V J				01
	C328	**UR847470**	Electrolytic Cap.	47.00 25.0V				01
	C329	**UR847100**	Electrolytic Cap.	10.00 25.0V				01
	C330	**UX063100**	Ceramic Capacitor (Chip)	1000P 50V K				01
	C331	**UR866470**	Electrolytic Cap.	4.70 50.0V				01
	C332	**UX062100**	Ceramic Capacitor (Chip)	100P 50V J				01
	-334	**UX062100**	Ceramic Capacitor (Chip)	100P 50V J				01
	C335	**UR847470**	Electrolytic Cap.	47.00 25.0V				01
	C336	**UR866470**	Electrolytic Cap.	4.70 50.0V				01
	C337	**UR847100**	Electrolytic Cap.	10.00 25.0V				01
	C338	**UX062100**	Ceramic Capacitor (Chip)	100P 50V J				01
	C339	**UX062100**	Ceramic Capacitor (Chip)	100P 50V J				01
	C340	**UX061470**	Ceramic Capacitor (Chip)	47P 50V J				
	C341	**UR847470**	Electrolytic Cap.	47.00 25.0V				01
	C342	**UX064100**	Ceramic Capacitor (Chip)	0.0100 50V K				01
	-355	**UX064100**	Ceramic Capacitor (Chip)	0.0100 50V K				01
	C401	**VV488800**	Electrolytic Cap.-LLM	10.00 50.0V				01
	C402	**VV488800**	Electrolytic Cap.-LLM	10.00 50.0V				01
	C403	**UR847100**	Electrolytic Cap.	10.00 25.0V				01
	C404	**UR847100**	Electrolytic Cap.	10.00 25.0V				01
*	C405	**UX062820**	Ceramic Capacitor (Chip)	820P 50V K				
*	-407	**UX062820**	Ceramic Capacitor (Chip)	820P 50V K				
	C408	**UX061100**	Ceramic Capacitor (Chip)	10P 50V D				01
	C409	**UR828470**	Electrolytic Cap.	470.00 10.0V				01
*	C410	**UX062820**	Ceramic Capacitor (Chip)	820P 50V K				
	C411	**UX061100**	Ceramic Capacitor (Chip)	10P 50V D				01
	C412	**UX062470**	Ceramic Capacitor (Chip)	470P 50V J				
	C413	**UX061330**	Ceramic Capacitor (Chip)	33P 50V J				
	C414	**UR847100**	Electrolytic Cap.	10.00 25.0V				01
	C415	**VZ597300**	Mylar Capacitor	0.091 50V J				01
	C416	**VZ597300**	Mylar Capacitor	0.091 50V J				01
	C417	**UX062100**	Ceramic Capacitor (Chip)	100P 50V J				01
	C418	**UR847100**	Electrolytic Cap.	10.00 25.0V				01
	C419	**UR847100**	Electrolytic Cap.	10.00 25.0V				01
	C420	**UA954390**	Mylar Capacitor	0.0390 50V J				01
	C421	**VV190000**	Mylar Capacitor	820P 50V J				01
	C422	**UX061470**	Ceramic Capacitor (Chip)	47P 50V J				

❇: New Parts

RANK: Japan only

	REF NO.	PART NO.	DESCRIPTION			REMARKS	QTY	RANK
	C423	**UX062100**	Ceramic Capacitor (Chip)	100P 50V J				01
	C424	**UA953390**	Mylar Capacitor	3900P 50V J				01
	C425	**UX062100**	Ceramic Capacitor (Chip)	100P 50V J				01
	C426	**UA954100**	Mylar Capacitor	0.0100 50V J				01
	C427	**UX061220**	Ceramic Capacitor (Chip)	22P 50V J				01
	C428	**UR847470**	Electrolytic Cap.	47.00 25.0V				01
	C429	**UR847100**	Electrolytic Cap.	10.00 25.0V				01
	C430	**UX063100**	Ceramic Capacitor (Chip)	1000P 50V K				01
	C431	**UR866470**	Electrolytic Cap.	4.70 50.0V				01
	C432	**UX062100**	Ceramic Capacitor (Chip)	100P 50V J				01
	-434	**UX062100**	Ceramic Capacitor (Chip)	100P 50V J				01
	C435	**UR847470**	Electrolytic Cap.	47.00 25.0V				01
	C436	**UR866470**	Electrolytic Cap.	4.70 50.0V				01
	C437	**UR847100**	Electrolytic Cap.	10.00 25.0V				01
	C438	**UX062100**	Ceramic Capacitor (Chip)	100P 50V J				01
	C439	**UX062100**	Ceramic Capacitor (Chip)	100P 50V J				01
	C440	**UX061470**	Ceramic Capacitor (Chip)	47P 50V J				
	C441	**UR847470**	Electrolytic Cap.	47.00 25.0V				01
	C442	**UX064100**	Ceramic Capacitor (Chip)	0.0100 50V K				01
	C443	**UX064100**	Ceramic Capacitor (Chip)	0.0100 50V K				01
	C501	**VV488800**	Electrolytic Cap.-LLM	10.00 50.0V				01
	C502	**VV488800**	Electrolytic Cap.-LLM	10.00 50.0V				01
	C503	**UR847100**	Electrolytic Cap.	10.00 25.0V				01
	C504	**UR847100**	Electrolytic Cap.	10.00 25.0V				01
*	C505	**UX062820**	Ceramic Capacitor (Chip)	820P 50V K				
*	-507	**UX062820**	Ceramic Capacitor (Chip)	820P 50V K				
	C508	**UX061100**	Ceramic Capacitor (Chip)	10P 50V D				01
	C509	**UR828470**	Electrolytic Cap.	470.00 10.0V				01
*	C510	**UX062820**	Ceramic Capacitor (Chip)	820P 50V K				
	C511	**UX061100**	Ceramic Capacitor (Chip)	10P 50V D				01
	C512	**UX062470**	Ceramic Capacitor (Chip)	470P 50V J				
	C513	**UX061330**	Ceramic Capacitor (Chip)	33P 50V J				
	C514	**UR847100**	Electrolytic Cap.	10.00 25.0V				01
	C515	**VZ597300**	Mylar Capacitor	0.091 50V J				01
	C516	**VZ597300**	Mylar Capacitor	0.091 50V J				01
	C517	**UX062100**	Ceramic Capacitor (Chip)	100P 50V J				01
	C518	**UR847100**	Electrolytic Cap.	10.00 25.0V				01
	C519	**UR847100**	Electrolytic Cap.	10.00 25.0V				01
	C520	**UA954390**	Mylar Capacitor	0.0390 50V J				01
	C521	**VV190000**	Mylar Capacitor	820P 50V J				01
	C522	**UX061470**	Ceramic Capacitor (Chip)	47P 50V J				
	C523	**UX062100**	Ceramic Capacitor (Chip)	100P 50V J				01
	C524	**UA953390**	Mylar Capacitor	3900P 50V J				01
	C525	**UX062100**	Ceramic Capacitor (Chip)	100P 50V J				01
	C526	**UA954100**	Mylar Capacitor	0.0100 50V J				01
	C527	**UX061220**	Ceramic Capacitor (Chip)	22P 50V J				01
	C528	**UR847470**	Electrolytic Cap.	47.00 25.0V				01
	C529	**UR847100**	Electrolytic Cap.	10.00 25.0V				01
	C530	**UX063100**	Ceramic Capacitor (Chip)	1000P 50V K				01
	C531	**UR866470**	Electrolytic Cap.	4.70 50.0V				01
	C532	**UX062100**	Ceramic Capacitor (Chip)	100P 50V J				01
	-534	**UX062100**	Ceramic Capacitor (Chip)	100P 50V J				01
	C535	**UR847470**	Electrolytic Cap.	47.00 25.0V				01
	C536	**UR866470**	Electrolytic Cap.	4.70 50.0V				01
	C537	**UR847100**	Electrolytic Cap.	10.00 25.0V				01
	C538	**UX062100**	Ceramic Capacitor (Chip)	100P 50V J				01
	C539	**UX062100**	Ceramic Capacitor (Chip)	100P 50V J				01
	C540	**UX061470**	Ceramic Capacitor (Chip)	47P 50V J				
	C541	**UR847470**	Electrolytic Cap.	47.00 25.0V				01
	C542	**UR877100**	Electrolytic Cap.	10.00 63.0V				01
	C543	**UX064100**	Ceramic Capacitor (Chip)	0.0100 50V K				01
	-556	**UX064100**	Ceramic Capacitor (Chip)	0.0100 50V K				01
	C601	**VV488800**	Electrolytic Cap.-LLM	10.00 50.0V				01
	C602	**VV488800**	Electrolytic Cap.-LLM	10.00 50.0V				01
	C603	**UR847100**	Electrolytic Cap.	10.00 25.0V				01
	C604	**UR847100**	Electrolytic Cap.	10.00 25.0V				01
*	C605	**UX062820**	Ceramic Capacitor (Chip)	820P 50V K				
*	-607	**UX062820**	Ceramic Capacitor (Chip)	820P 50V K				
	C608	**UX061100**	Ceramic Capacitor (Chip)	10P 50V D				01
	C609	**UR828470**	Electrolytic Cap.	470.00 10.0V				01

✻: New Parts

RANK: Japan only

	REF NO.	PART NO.	DESCRIPTION			REMARKS	QTY	RANK
*	C610	**UX062820**	Ceramic Capacitor (Chip)	820P 50V K				
	C611	**UX061100**	Ceramic Capacitor (Chip)	10P 50V D				01
	C612	**UX062470**	Ceramic Capacitor (Chip)	470P 50V J				
	C613	**UX061330**	Ceramic Capacitor (Chip)	33P 50V J				
	C614	**UR847100**	Electrolytic Cap.	10.00 25.0V				01
	C615	**VZ597300**	Mylar Capacitor	0.091 50V J				01
	C616	**VZ597300**	Mylar Capacitor	0.091 50V J				01
	C617	**UX062100**	Ceramic Capacitor (Chip)	100P 50V J				01
	C618	**UR847100**	Electrolytic Cap.	10.00 25.0V				01
	C619	**UR847100**	Electrolytic Cap.	10.00 25.0V				01
	C620	**UA954390**	Mylar Capacitor	0.0390 50V J				01
	C621	**VV190000**	Mylar Capacitor	820P 50V J				01
	C622	**UX061470**	Ceramic Capacitor (Chip)	47P 50V J				
	C623	**UX062100**	Ceramic Capacitor (Chip)	100P 50V J				01
	C624	**UA953390**	Mylar Capacitor	3900P 50V J				01
	C625	**UX062100**	Ceramic Capacitor (Chip)	100P 50V J				01
	C626	**UA954100**	Mylar Capacitor	0.0100 50V J				01
	C627	**UX061220**	Ceramic Capacitor (Chip)	22P 50V J				01
	C628	**UR847470**	Electrolytic Cap.	47.00 25.0V				01
	C629	**UR847100**	Electrolytic Cap.	10.00 25.0V				01
	C630	**UX063100**	Ceramic Capacitor (Chip)	1000P 50V K				01
	C631	**UR866470**	Electrolytic Cap.	4.70 50.0V				01
	C632	**UX062100**	Ceramic Capacitor (Chip)	100P 50V J				01
	-634	**UX062100**	Ceramic Capacitor (Chip)	100P 50V J				01
	C635	**UR847470**	Electrolytic Cap.	47.00 25.0V				01
	C636	**UR866470**	Electrolytic Cap.	4.70 50.0V				01
	C637	**UR847100**	Electrolytic Cap.	10.00 25.0V				01
	C638	**UX062100**	Ceramic Capacitor (Chip)	100P 50V J				01
	C639	**UX062100**	Ceramic Capacitor (Chip)	100P 50V J				01
	C640	**UX061470**	Ceramic Capacitor (Chip)	47P 50V J				
	C641	**UR847470**	Electrolytic Cap.	47.00 25.0V				01
	C642	**UX064100**	Ceramic Capacitor (Chip)	0.0100 50V K				01
	C643	**UX064100**	Ceramic Capacitor (Chip)	0.0100 50V K				01
	C701	**VV488800**	Electrolytic Cap.-LLM	10.00 50.0V				01
	C702	**VV488800**	Electrolytic Cap.-LLM	10.00 50.0V				01
	C703	**UR847100**	Electrolytic Cap.	10.00 25.0V				01
	C704	**UR847100**	Electrolytic Cap.	10.00 25.0V				01
*	C705	**UX062820**	Ceramic Capacitor (Chip)	820P 50V K				
*	-707	**UX062820**	Ceramic Capacitor (Chip)	820P 50V K				
	C708	**UX061100**	Ceramic Capacitor (Chip)	10P 50V D				01
	C709	**UR828470**	Electrolytic Cap.	470.00 10.0V				01
*	C710	**UX062820**	Ceramic Capacitor (Chip)	820P 50V K				
	C711	**UX061100**	Ceramic Capacitor (Chip)	10P 50V D				01
	C712	**UX062470**	Ceramic Capacitor (Chip)	470P 50V J				
	C713	**UX061330**	Ceramic Capacitor (Chip)	33P 50V J				
	C714	**UR847100**	Electrolytic Cap.	10.00 25.0V				01
	C715	**VZ597300**	Mylar Capacitor	0.091 50V J				01
	C716	**VZ597300**	Mylar Capacitor	0.091 50V J				01
	C717	**UX062100**	Ceramic Capacitor (Chip)	100P 50V J				01
	C718	**UR847100**	Electrolytic Cap.	10.00 25.0V				01
	C719	**UR847100**	Electrolytic Cap.	10.00 25.0V				01
	C720	**UA954390**	Mylar Capacitor	0.0390 50V J				01
	C721	**VV190000**	Mylar Capacitor	820P 50V J				01
	C722	**UX061470**	Ceramic Capacitor (Chip)	47P 50V J				
	C723	**UX062100**	Ceramic Capacitor (Chip)	100P 50V J				01
	C724	**UA953390**	Mylar Capacitor	3900P 50V J				01
	C725	**UX062100**	Ceramic Capacitor (Chip)	100P 50V J				01
	C726	**UA954100**	Mylar Capacitor	0.0100 50V J				01
	C727	**UX061220**	Ceramic Capacitor (Chip)	22P 50V J				01
	C728	**UR847470**	Electrolytic Cap.	47.00 25.0V				01
	C729	**UR847100**	Electrolytic Cap.	10.00 25.0V				01
	C730	**UX063100**	Ceramic Capacitor (Chip)	1000P 50V K				01
	C731	**UR866470**	Electrolytic Cap.	4.70 50.0V				01
	C732	**UX062100**	Ceramic Capacitor (Chip)	100P 50V J				01
	-734	**UX062100**	Ceramic Capacitor (Chip)	100P 50V J				01
	C735	**UR847470**	Electrolytic Cap.	47.00 25.0V				01
	C736	**UR866470**	Electrolytic Cap.	4.70 50.0V				01
	C737	**UR847100**	Electrolytic Cap.	10.00 25.0V				01
	C738	**UX062100**	Ceramic Capacitor (Chip)	100P 50V J				01
	C739	**UX062100**	Ceramic Capacitor (Chip)	100P 50V J				01

❇: New Parts

RANK: Japan only

	REF NO.	PART NO.	DESCRIPTION			REMARKS	QTY	RANK
	C740	**UX061470**	Ceramic Capacitor (Chip)	47P 50V J				
	C741	**UR847470**	Electrolytic Cap.	47.00 25.0V				01
	C742	**UX064100**	Ceramic Capacitor (Chip)	0.0100 50V K				01
	-755	**UX064100**	Ceramic Capacitor (Chip)	0.0100 50V K				01
	C801	**VV488800**	Electrolytic Cap.-LLM	10.00 50.0V				01
	C802	**VV488800**	Electrolytic Cap.-LLM	10.00 50.0V				01
	C803	**UR847100**	Electrolytic Cap.	10.00 25.0V				01
	C804	**UR847100**	Electrolytic Cap.	10.00 25.0V				01
*	C805	**UX062820**	Ceramic Capacitor (Chip)	820P 50V K				
*	-807	**UX062820**	Ceramic Capacitor (Chip)	820P 50V K				
	C808	**UX061100**	Ceramic Capacitor (Chip)	10P 50V D				01
	C809	**UR828470**	Electrolytic Cap.	470.00 10.0V				01
*	C810	**UX062820**	Ceramic Capacitor (Chip)	820P 50V K				
	C811	**UX061100**	Ceramic Capacitor (Chip)	10P 50V D				01
	C812	**UX062470**	Ceramic Capacitor (Chip)	470P 50V J				
	C813	**UX061330**	Ceramic Capacitor (Chip)	33P 50V J				
	C814	**UR847100**	Electrolytic Cap.	10.00 25.0V				01
	C815	**VZ597300**	Mylar Capacitor	0.091 50V J				01
	C816	**VZ597300**	Mylar Capacitor	0.091 50V J				01
	C817	**UX062100**	Ceramic Capacitor (Chip)	100P 50V J				01
	C818	**UR847100**	Electrolytic Cap.	10.00 25.0V				01
	C819	**UR847100**	Electrolytic Cap.	10.00 25.0V				01
	C820	**UA954390**	Mylar Capacitor	0.0390 50V J				01
	C821	**VV190000**	Mylar Capacitor	820P 50V J				01
	C822	**UX061470**	Ceramic Capacitor (Chip)	47P 50V J				
	C823	**UX062100**	Ceramic Capacitor (Chip)	100P 50V J				01
	C824	**UA953390**	Mylar Capacitor	3900P 50V J				01
	C825	**UX062100**	Ceramic Capacitor (Chip)	100P 50V J				01
	C826	**UA954100**	Mylar Capacitor	0.0100 50V J				01
	C827	**UX061220**	Ceramic Capacitor (Chip)	22P 50V J				01
	C828	**UR847470**	Electrolytic Cap.	47.00 25.0V				01
	C829	**UR847100**	Electrolytic Cap.	10.00 25.0V				01
	C830	**UX063100**	Ceramic Capacitor (Chip)	1000P 50V K				01
	C831	**UR866470**	Electrolytic Cap.	4.70 50.0V				01
	C832	**UX062100**	Ceramic Capacitor (Chip)	100P 50V J				01
	-834	**UX062100**	Ceramic Capacitor (Chip)	100P 50V J				01
	C835	**UR847470**	Electrolytic Cap.	47.00 25.0V				01
	C836	**UR866470**	Electrolytic Cap.	4.70 50.0V				01
	C837	**UR847100**	Electrolytic Cap.	10.00 25.0V				01
	C838	**UX062100**	Ceramic Capacitor (Chip)	100P 50V J				01
	C839	**UX062100**	Ceramic Capacitor (Chip)	100P 50V J				01
	C840	**UX061470**	Ceramic Capacitor (Chip)	47P 50V J				
	C841	**UR847470**	Electrolytic Cap.	47.00 25.0V				01
	C842	**UX064100**	Ceramic Capacitor (Chip)	0.0100 50V K				01
	C843	**UX064100**	Ceramic Capacitor (Chip)	0.0100 50V K				01
	CN901	**V2156500**	FMN Connector	FMN 12P TE				03
	-904	**V2156500**	FMN Connector	FMN 12P TE				03
	D101	**VT332900**	Diode	1SS355 TE-17				01
	D102	**VT332900**	Diode	1SS355 TE-17				01
	D201	**VT332900**	Diode	1SS355 TE-17				01
	D202	**VT332900**	Diode	1SS355 TE-17				01
	D301	**VT332900**	Diode	1SS355 TE-17				01
	D302	**VT332900**	Diode	1SS355 TE-17				01
	D401	**VT332900**	Diode	1SS355 TE-17				01
	D402	**VT332900**	Diode	1SS355 TE-17				01
	D501	**VT332900**	Diode	1SS355 TE-17				01
	D502	**VT332900**	Diode	1SS355 TE-17				01
	D601	**VT332900**	Diode	1SS355 TE-17				01
	D602	**VT332900**	Diode	1SS355 TE-17				01
	D701	**VT332900**	Diode	1SS355 TE-17				01
	D702	**VT332900**	Diode	1SS355 TE-17				01
	D801	**VT332900**	Diode	1SS355 TE-17				01
	D802	**VT332900**	Diode	1SS355 TE-17				01
	IC101	**XJ553A00**	IC	NJM2068MD-T1		OP AMP		02
	-105	**XJ553A00**	IC	NJM2068MD-T1		OP AMP		02
	IC106	**IG103520**	IC	NJM4558M(T1)		OP AMP		03
	IC107	**XJ553A00**	IC	NJM2068MD-T1		OP AMP		02
	IC201	**XJ553A00**	IC	NJM2068MD-T1		OP AMP		02
	IC301	**XJ553A00**	IC	NJM2068MD-T1		OP AMP		02
	-305	**XJ553A00**	IC	NJM2068MD-T1		OP AMP		02

*: New Parts

RANK: Japan only

	REF NO.	PART NO.	DESCRIPTION			REMARKS	QTY	RANK
	IC306	**IG103520**	IC	NJM4558M(T1)		OP AMP		03
	IC307	**XJ553A00**	IC	NJM2068MD-T1		OP AMP		02
	IC401	**XJ553A00**	IC	NJM2068MD-T1		OP AMP		02
	IC501	**XJ553A00**	IC	NJM2068MD-T1		OP AMP		02
	-505	**XJ553A00**	IC	NJM2068MD-T1		OP AMP		02
	IC506	**IG103520**	IC	NJM4558M(T1)		OP AMP		03
	IC507	**XJ553A00**	IC	NJM2068MD-T1		OP AMP		02
	IC601	**XJ553A00**	IC	NJM2068MD-T1		OP AMP		02
	IC701	**XJ553A00**	IC	NJM2068MD-T1		OP AMP		02
	-705	**XJ553A00**	IC	NJM2068MD-T1		OP AMP		02
	IC706	**IG103520**	IC	NJM4558M(T1)		OP AMP		03
	IC707	**XJ553A00**	IC	NJM2068MD-T1		OP AMP		02
	IC801	**XJ553A00**	IC	NJM2068MD-T1		OP AMP		02
	JK101	**V6127200**	XLM Connector	JACK JY-5042		INPUT A(CH9)		03
	JK102	**V3939200**	Phone Jack	JY6351J-46-250 2SW		INPUT B(CH9)		02
	JK103	**V2886000**	Phone Jack	JY-6351J-06-340		INSERT(CH9)		02
	JK201	**V6127200**	XLM Connector	JACK JY-5042		INPUT A(CH10)		03
	JK202	**V3939200**	Phone Jack	JY6351J-46-250 2SW		INPUT B(CH10)		02
	JK203	**V2886000**	Phone Jack	JY-6351J-06-340		INSERT(CH10)		02
	JK301	**V6127200**	XLM Connector	JACK JY-5042		INPUT A(CH11)		03
	JK302	**V3939200**	Phone Jack	JY6351J-46-250 2SW		INPUT B(CH11)		02
	JK303	**V2886000**	Phone Jack	JY-6351J-06-340		INSERT(CH11)		02
	JK401	**V6127200**	XLM Connector	JACK JY-5042		INPUT A(CH12)		03
	JK402	**V3939200**	Phone Jack	JY6351J-46-250 2SW		INPUT B(CH412)		02
	JK403	**V2886000**	Phone Jack	JY-6351J-06-340		INSERT(CH12)		02
	JK501	**V6127200**	XLM Connector	JACK JY-5042		INPUT A(CH13)		03
	JK502	**V3939200**	Phone Jack	JY6351J-46-250 2SW		INPUT B(CH13)		02
	JK503	**V2886000**	Phone Jack	JY-6351J-06-340		INSERT(CH13)		02
	JK601	**V6127200**	XLM Connector	JACK JY-5042		INPUT A(CH14)		03
	JK602	**V3939200**	Phone Jack	JY6351J-46-250 2SW		INPUT B(CH14)		02
	JK603	**V2886000**	Phone Jack	JY-6351J-06-340		INSERT(CH14)		02
	JK701	**V6127200**	XLM Connector	JACK JY-5042		INPUT A(CH15)		03
	JK702	**V3939200**	Phone Jack	JY6351J-46-250 2SW		INPUT B(CH15)		02
	JK703	**V2886000**	Phone Jack	JY-6351J-06-340		INSERT(CH15)		02
	JK801	**V6127200**	XLM Connector	JACK JY-5042		INPUT A(CH16)		03
	JK802	**V3939200**	Phone Jack	JY6351J-46-250 2SW		INPUT B(CH16)		02
	JK803	**V2886000**	Phone Jack	JY-6351J-06-340		INSERT(CH16)		02
*	LD101	**V8840400**	LED	L34YD-TNB5/13.6 YE		ON(CH9)		01
*	LD102	**V8840100**	LED	L34HD-TNB5/13.6 RE		PEAK(CH9)		01
*	LD103	**V8840200**	LED	L34GD-TNB5/13.6 GR		SIGNAL(CH9)		01
*	LD201	**V8840400**	LED	L34YD-TNB5/13.6 YE		ON(CH10)		01
*	LD202	**V8840100**	LED	L34HD-TNB5/13.6 RE		PEAK(CH10)		01
*	LD203	**V8840200**	LED	L34GD-TNB5/13.6 GR		SIGNAL(CH10)		01
*	LD301	**V8840400**	LED	L34YD-TNB5/13.6 YE		ON(CH11)		01
*	LD302	**V8840100**	LED	L34HD-TNB5/13.6 RE		PEAK(CH11)		01
*	LD303	**V8840200**	LED	L34GD-TNB5/13.6 GR		SIGNAL(CH11)		01
*	LD401	**V8840400**	LED	L34YD-TNB5/13.6 YE		ON(CH12)		01
*	LD402	**V8840100**	LED	L34HD-TNB5/13.6 RE		PEAK(CH12)		01
*	LD403	**V8840200**	LED	L34GD-TNB5/13.6 GR		SIGNAL(CH12)		01
*	LD501	**V8840400**	LED	L34YD-TNB5/13.6 YE		ON(CH13)		01
*	LD502	**V8840100**	LED	L34HD-TNB5/13.6 RE		PEAK(CH13)		01
*	LD503	**V8840200**	LED	L34GD-TNB5/13.6 GR		SIGNAL(CH13)		01
*	LD601	**V8840400**	LED	L34YD-TNB5/13.6 YE		ON(CH14)		01
*	LD602	**V8840100**	LED	L34HD-TNB5/13.6 RE		PEAK(CH14)		01
*	LD603	**V8840200**	LED	L34GD-TNB5/13.6 GR		SIGNAL(CH14)		01
*	LD701	**V8840400**	LED	L34YD-TNB5/13.6 YE		ON(CH15)		01
*	LD702	**V8840100**	LED	L34HD-TNB5/13.6 RE		PEAK(CH15)		01
*	LD703	**V8840200**	LED	L34GD-TNB5/13.6 GR		SIGNAL(CH15)		01
*	LD801	**V8840400**	LED	L34YD-TNB5/13.6 YE		ON(CH16)		01
*	LD802	**V8840100**	LED	L34HD-TNB5/13.6 RE		PEAK(CH16)		01
*	LD803	**V8840200**	LED	L34GD-TNB5/13.6 GR		SIGNAL(CH16)		01
*	LD901	**V8840100**	LED	L34HD-TNB5/13.6 RE		PHANTOM		01
*	Q101	**V7421700**	Transistor (chip)	2SC2SC3324 GR,BL				01
*	Q102	**V7421700**	Transistor (chip)	2SC2SC3324 GR,BL				01
*	Q103	**V7421800**	Transistor	2SA2SA1312 GR,BL				01
	Q104	**VV556400**	Transistor	2SC2412K Q,R,S				01
*	Q201	**V7421700**	Transistor (chip)	2SC2SC3324 GR,BL				01
*	Q202	**V7421700**	Transistor (chip)	2SC2SC3324 GR,BL				01
*	Q203	**V7421800**	Transistor	2SA2SA1312 GR,BL				01
	Q204	**VV556400**	Transistor	2SC2412K Q,R,S				01

✻: New Parts

RANK: Japan only

	REF NO.	PART NO.	DESCRIPTION			REMARKS	QTY	RANK
*	Q301	**V7421700**	Transistor (chip)	2SC2SC3324 GR,BL				01
*	Q302	**V7421700**	Transistor (chip)	2SC2SC3324 GR,BL				01
*	Q303	**V7421800**	Transistor	2SA2SA1312 GR,BL				01
	Q304	**VV556400**	Transistor	"2SC2412K Q,R,S "				01
*	Q401	**V7421700**	Transistor (chip)	"2SC2SC3324 GR,BL "				01
*	Q402	**V7421700**	Transistor (chip)	"2SC2SC3324 GR,BL "				01
*	Q403	**V7421800**	Transistor	"2SA2SA1312 GR,BL "				01
	Q404	**VV556400**	Transistor	"2SC2412K Q,R,S "				01
	Q405	**VV556400**	Transistor	"2SC2412K Q,R,S "				01
*	Q501	**V7421700**	Transistor (chip)	"2SC2SC3324 GR,BL "				01
*	Q502	**V7421700**	Transistor (chip)	"2SC2SC3324 GR,BL "				01
*	Q503	**V7421800**	Transistor	"2SA2SA1312 GR,BL "				01
	Q504	**VV556400**	Transistor	"2SC2412K Q,R,S "				01
*	Q601	**V7421700**	Transistor (chip)	"2SC2SC3324 GR,BL "				01
*	Q602	**V7421700**	Transistor (chip)	"2SC2SC3324 GR,BL "				01
*	Q603	**V7421800**	Transistor	"2SA2SA1312 GR,BL "				01
	Q604	**VV556400**	Transistor	"2SC2412K Q,R,S "				01
*	Q701	**V7421700**	Transistor (chip)	"2SC2SC3324 GR,BL "				01
*	Q702	**V7421700**	Transistor (chip)	"2SC2SC3324 GR,BL "				01
*	Q703	**V7421800**	Transistor	"2SA2SA1312 GR,BL "				01
	Q704	**VV556400**	Transistor	"2SC2412K Q,R,S "				01
*	Q801	**V7421700**	Transistor (chip)	"2SC2SC3324 GR,BL "				01
*	Q802	**V7421700**	Transistor (chip)	"2SC2SC3324 GR,BL "				01
*	Q803	**V7421800**	Transistor	"2SA2SA1312 GR,BL "				01
	Q804	**VV556400**	Transistor	"2SC2412K Q,R,S "				01
	Q805	**VV556400**	Transistor	"2SC2412K Q,R,S "				01
*	R101	**RG005180**	Carbon Resistor (chip)	180 0.1 J				
	R102	**VV065300**	Metal Film Resistor	6.8K 1/4 F				01
	R103	**VV065300**	Metal Film Resistor	6.8K 1/4 F				01
*	R104	**RF358100**	Carbon Resistor (chip)	100.0K : D 1608				01
*	R105	**RF358100**	Carbon Resistor (chip)	100.0K : D 1608				01
	R106	**RG007100**	Carbon Resistor (chip)	10K 0.1 J				
	R107	**RF357100**	Carbon Resistor (chip)	10.0K : D 1608				01
*	R108	**RF356110**	Carbon Resistor (chip)	1.1K : D 1608				
	R109	**RF357100**	Carbon Resistor (chip)	10.0K : D 1608				01
*	R110	**RF358100**	Carbon Resistor (chip)	100.0K : D 1608				01
*	R111	**RF358100**	Carbon Resistor (chip)	100.0K : D 1608				01
	R112	**RG007220**	Carbon Resistor (chip)	22K 0.1 J				
	R113	**RG006470**	Carbon Resistor (chip)	4.7K 0.1 J				
*	R114	**RF358100**	Carbon Resistor (chip)	100.0K : D 1608				01
*	R115	**RF358100**	Carbon Resistor (chip)	100.0K : D 1608				01
	R116	**RG004100**	Carbon Resistor (chip)	10 0.1 J				
*	R117	**RF356220**	Carbon Resistor (chip)	2.2K : D 1608				01
*	R118	**RF356820**	Carbon Resistor (chip)	8.2K : D 1608				
*	R119	**RF354200**	Carbon Resistor (chip)	20.0 : D 1608				01
*	R120	**RF357240**	Carbon Resistor (chip)	24.0K : D 1608				
*	R121	**RF356220**	Carbon Resistor (chip)	2.2K : D 1608				01
*	R122	**RF356820**	Carbon Resistor (chip)	8.2K : D 1608				
*	R123	**RF357240**	Carbon Resistor (chip)	24.0K : D 1608				
	R124	**RG004100**	Carbon Resistor (chip)	10 0.1 J				
*	R125	**RF356470**	Carbon Resistor (chip)	4.7K : D 1608				01
*	R126	**RF356470**	Carbon Resistor (chip)	4.7K : D 1608				01
	R127	**RG008220**	Carbon Resistor (chip)	220K 0.1 J				
*	R128	**RG007150**	Carbon Resistor (chip)	15K 0.1 J				
	R129	**RG007300**	Carbon Resistor (chip)	30K 0.1 J				
	R130	**RG004100**	Carbon Resistor (chip)	10 0.1 J				
	R131	**RG008220**	Carbon Resistor (chip)	220K 0.1 J				
	R132	**RG008220**	Carbon Resistor (chip)	220K 0.1 J				
	R133	**RG007100**	Carbon Resistor (chip)	10K 0.1 J				
	R134	**RG006470**	Carbon Resistor (chip)	4.7K 0.1 J				
	R135	**RG007330**	Carbon Resistor (chip)	33K 0.1 J				
	R136	**RG007100**	Carbon Resistor (chip)	10K 0.1 J				
	R137	**RG006560**	Carbon Resistor (chip)	5.6K 0.1 J				
	R138	**RG006470**	Carbon Resistor (chip)	4.7K 0.1 J				
	R139	**RG006820**	Carbon Resistor (chip)	8.2K 0.1 J				
	R140	**RG006470**	Carbon Resistor (chip)	4.7K 0.1 J				
	R141	**RG006820**	Carbon Resistor (chip)	8.2K 0.1 J				
	R142	**RG004100**	Carbon Resistor (chip)	10 0.1 J				
	R143	**RG008220**	Carbon Resistor (chip)	220K 0.1 J				
	R144	**RG006560**	Carbon Resistor (chip)	5.6K 0.1 J				

*: New Parts

RANK: Japan only

	REF NO.	PART NO.	DESCRIPTION			REMARKS	QTY	RANK
	-146	**RG006560**	Carbon Resistor (chip)	5.6K 0.1 J				
	R147	**RG007560**	Carbon Resistor (chip)	56K 0.1 J				
	R148	**RG007330**	Carbon Resistor (chip)	33K 0.1 J				
	R149	**RG006560**	Carbon Resistor (chip)	5.6K 0.1 J				
	R150	**RG008220**	Carbon Resistor (chip)	220K 0.1 J				
	R151	**RG005220**	Carbon Resistor (chip)	220 0.1 J				
	R152	**RG007120**	Carbon Resistor (chip)	12K 0.1 J				
	R153	**RG006330**	Carbon Resistor (chip)	3.3K 0.1 J				
	R154	**RG007330**	Carbon Resistor (chip)	33K 0.1 J				
	R155	**RG008100**	Carbon Resistor (chip)	100K 0.1 J				
	R156	**RG005220**	Carbon Resistor (chip)	220 0.1 J				
*	R157	**RG206220**	Carbon Resistor (chip)	2.2K 1/4 J				
	R158	**RG007180**	Carbon Resistor (chip)	18K 0.1 J				
	R159	**RG005220**	Carbon Resistor (chip)	220 0.1 J				
	R160	**RG006470**	Carbon Resistor (chip)	4.7K 0.1 J				
	R161	**RG007100**	Carbon Resistor (chip)	10K 0.1 J				
	R162	**RG004100**	Carbon Resistor (chip)	10 0.1 J				
	R163	**RG008220**	Carbon Resistor (chip)	220K 0.1 J				
	R164	**RG007180**	Carbon Resistor (chip)	18K 0.1 J				
	-169	**RG007180**	Carbon Resistor (chip)	18K 0.1 J				
*	R170	**RG007360**	Carbon Resistor (chip)	36K 0.1 J				
*	R171	**RG007360**	Carbon Resistor (chip)	36K 0.1 J				
	R172	**RG008100**	Carbon Resistor (chip)	100K 0.1 J				
	R173	**VV276800**	Flame Proof C. Resistor	100 1/4 J				01
*	R201	**RG005180**	Carbon Resistor (chip)	180 0.1 J				
	R202	**VV065300**	Metal Film Resistor	6.8K 1/4 F				01
	R203	**VV065300**	Metal Film Resistor	6.8K 1/4 F				01
*	R204	**RF358100**	Carbon Resistor (chip)	100.0K : D 1608				01
*	R205	**RF358100**	Carbon Resistor (chip)	100.0K : D 1608				01
	R206	**RG007100**	Carbon Resistor (chip)	10K 0.1 J				
	R207	**RF357100**	Carbon Resistor (chip)	10.0K : D 1608				01
*	R208	**RF356110**	Carbon Resistor (chip)	1.1K : D 1608				
	R209	**RF357100**	Carbon Resistor (chip)	10.0K : D 1608				01
*	R210	**RF358100**	Carbon Resistor (chip)	100.0K : D 1608				01
*	R211	**RF358100**	Carbon Resistor (chip)	100.0K : D 1608				01
	R212	**RG007220**	Carbon Resistor (chip)	22K 0.1 J				
	R213	**RG006470**	Carbon Resistor (chip)	4.7K 0.1 J				
*	R214	**RF358100**	Carbon Resistor (chip)	100.0K : D 1608				01
*	R215	**RF358100**	Carbon Resistor (chip)	100.0K : D 1608				01
	R216	**RG004100**	Carbon Resistor (chip)	10 0.1 J				
*	R217	**RF356220**	Carbon Resistor (chip)	2.2K : D 1608				01
*	R218	**RF356820**	Carbon Resistor (chip)	8.2K : D 1608				
*	R219	**RF354200**	Carbon Resistor (chip)	20.0 : D 1608				01
*	R220	**RF357240**	Carbon Resistor (chip)	24.0K : D 1608				
*	R221	**RF356220**	Carbon Resistor (chip)	2.2K : D 1608				01
*	R222	**RF356820**	Carbon Resistor (chip)	8.2K : D 1608				
*	R223	**RF357240**	Carbon Resistor (chip)	24.0K : D 1608				
	R224	**RG004100**	Carbon Resistor (chip)	10 0.1 J				
*	R225	**RF356470**	Carbon Resistor (chip)	4.7K : D 1608				01
*	R226	**RF356470**	Carbon Resistor (chip)	4.7K : D 1608				01
	R227	**RG008220**	Carbon Resistor (chip)	220K 0.1 J				
*	R228	**RG007150**	Carbon Resistor (chip)	15K 0.1 J				
	R229	**RG007300**	Carbon Resistor (chip)	30K 0.1 J				
	R230	**RG004100**	Carbon Resistor (chip)	10 0.1 J				
	R231	**RG008220**	Carbon Resistor (chip)	220K 0.1 J				
	R232	**RG008220**	Carbon Resistor (chip)	220K 0.1 J				
	R233	**RG007100**	Carbon Resistor (chip)	10K 0.1 J				
	R234	**RG006470**	Carbon Resistor (chip)	4.7K 0.1 J				
	R235	**RG007330**	Carbon Resistor (chip)	33K 0.1 J				
	R236	**RG007100**	Carbon Resistor (chip)	10K 0.1 J				
	R237	**RG006560**	Carbon Resistor (chip)	5.6K 0.1 J				
	R238	**RG006470**	Carbon Resistor (chip)	4.7K 0.1 J				
	R239	**RG006820**	Carbon Resistor (chip)	8.2K 0.1 J				
	R240	**RG006470**	Carbon Resistor (chip)	4.7K 0.1 J				
	R241	**RG006820**	Carbon Resistor (chip)	8.2K 0.1 J				
	R242	**RG004100**	Carbon Resistor (chip)	10 0.1 J				
	R243	**RG008220**	Carbon Resistor (chip)	220K 0.1 J				
	R244	**RG006560**	Carbon Resistor (chip)	5.6K 0.1 J				
	-246	**RG006560**	Carbon Resistor (chip)	5.6K 0.1 J				
	R247	**RG007560**	Carbon Resistor (chip)	56K 0.1 J				

✻: New Parts

RANK: Japan only

	REF NO.	PART NO.	DESCRIPTION			REMARKS	QTY	RANK
	R248	**RG007330**	Carbon Resistor (chip)	33K 0.1 J				
	R249	**RG006560**	Carbon Resistor (chip)	5.6K 0.1 J				
	R250	**RG008220**	Carbon Resistor (chip)	220K 0.1 J				
	R251	**RG005220**	Carbon Resistor (chip)	220 0.1 J				
	R252	**RG007120**	Carbon Resistor (chip)	12K 0.1 J				
	R253	**RG006330**	Carbon Resistor (chip)	3.3K 0.1 J				
	R254	**RG007330**	Carbon Resistor (chip)	33K 0.1 J				
	R255	**RG008100**	Carbon Resistor (chip)	100K 0.1 J				
	R256	**RG005220**	Carbon Resistor (chip)	220 0.1 J				
*	R257	**RG206220**	Carbon Resistor (chip)	2.2K 1/4 J				
	R258	**RG007180**	Carbon Resistor (chip)	18K 0.1 J				
	R259	**RG005220**	Carbon Resistor (chip)	220 0.1 J				
	R260	**RG006470**	Carbon Resistor (chip)	4.7K 0.1 J				
	R261	**RG007100**	Carbon Resistor (chip)	10K 0.1 J				
	R262	**RG004100**	Carbon Resistor (chip)	10 0.1 J				
	R263	**RG008220**	Carbon Resistor (chip)	220K 0.1 J				
	R264	**RG007180**	Carbon Resistor (chip)	18K 0.1 J				
	-269	**RG007180**	Carbon Resistor (chip)	18K 0.1 J				
*	R270	**RG007360**	Carbon Resistor (chip)	36K 0.1 J				
*	R271	**RG007360**	Carbon Resistor (chip)	36K 0.1 J				
*	R301	**RG005180**	Carbon Resistor (chip)	180 0.1 J				
	R302	**VV065300**	Metal Film Resistor	6.8K 1/4 F				01
	R303	**VV065300**	Metal Film Resistor	6.8K 1/4 F				01
*	R304	**RF358100**	Carbon Resistor (chip)	100.0K : D 1608				01
*	R305	**RF358100**	Carbon Resistor (chip)	100.0K : D 1608				01
	R306	**RG007100**	Carbon Resistor (chip)	10K 0.1 J				
	R307	**RF357100**	Carbon Resistor (chip)	10.0K : D 1608				01
*	R308	**RF356110**	Carbon Resistor (chip)	1.1K : D 1608				
	R309	**RF357100**	Carbon Resistor (chip)	10.0K : D 1608				01
*	R310	**RF358100**	Carbon Resistor (chip)	100.0K : D 1608				01
*	R311	**RF358100**	Carbon Resistor (chip)	100.0K : D 1608				01
	R312	**RG007220**	Carbon Resistor (chip)	22K 0.1 J				
	R313	**RG006470**	Carbon Resistor (chip)	4.7K 0.1 J				
*	R314	**RF358100**	Carbon Resistor (chip)	100.0K : D 1608				01
*	R315	**RF358100**	Carbon Resistor (chip)	100.0K : D 1608				01
	R316	**RG004100**	Carbon Resistor (chip)	10 0.1 J				
*	R317	**RF356220**	Carbon Resistor (chip)	2.2K : D 1608				01
*	R318	**RF356820**	Carbon Resistor (chip)	8.2K : D 1608				
*	R319	**RF354200**	Carbon Resistor (chip)	20.0 : D 1608				01
*	R320	**RF357240**	Carbon Resistor (chip)	24.0K : D 1608				
*	R321	**RF356220**	Carbon Resistor (chip)	2.2K : D 1608				01
*	R322	**RF356820**	Carbon Resistor (chip)	8.2K : D 1608				
*	R323	**RF357240**	Carbon Resistor (chip)	24.0K : D 1608				
	R324	**RG004100**	Carbon Resistor (chip)	10 0.1 J				
*	R325	**RF356470**	Carbon Resistor (chip)	4.7K : D 1608				01
*	R326	**RF356470**	Carbon Resistor (chip)	4.7K : D 1608				01
	R327	**RG008220**	Carbon Resistor (chip)	220K 0.1 J				
*	R328	**RG007150**	Carbon Resistor (chip)	15K 0.1 J				
	R329	**RG007300**	Carbon Resistor (chip)	30K 0.1 J				
	R330	**RG004100**	Carbon Resistor (chip)	10 0.1 J				
	R331	**RG008220**	Carbon Resistor (chip)	220K 0.1 J				
	R332	**RG008220**	Carbon Resistor (chip)	220K 0.1 J				
	R333	**RG007100**	Carbon Resistor (chip)	10K 0.1 J				
	R334	**RG006470**	Carbon Resistor (chip)	4.7K 0.1 J				
	R335	**RG007330**	Carbon Resistor (chip)	33K 0.1 J				
	R336	**RG007100**	Carbon Resistor (chip)	10K 0.1 J				
	R337	**RG006560**	Carbon Resistor (chip)	5.6K 0.1 J				
	R338	**RG006470**	Carbon Resistor (chip)	4.7K 0.1 J				
	R339	**RG006820**	Carbon Resistor (chip)	8.2K 0.1 J				
	R340	**RG006470**	Carbon Resistor (chip)	4.7K 0.1 J				
	R341	**RG006820**	Carbon Resistor (chip)	8.2K 0.1 J				
	R342	**RG004100**	Carbon Resistor (chip)	10 0.1 J				
	R343	**RG008220**	Carbon Resistor (chip)	220K 0.1 J				
	R344	**RG006560**	Carbon Resistor (chip)	5.6K 0.1 J				
	-346	**RG006560**	Carbon Resistor (chip)	5.6K 0.1 J				
	R347	**RG007560**	Carbon Resistor (chip)	56K 0.1 J				
	R348	**RG007330**	Carbon Resistor (chip)	33K 0.1 J				
	R349	**RG006560**	Carbon Resistor (chip)	5.6K 0.1 J				
	R350	**RG008220**	Carbon Resistor (chip)	220K 0.1 J				
	R351	**RG005220**	Carbon Resistor (chip)	220 0.1 J				

*: New Parts

RANK: Japan only

	REF NO.	PART NO.	DESCRIPTION			REMARKS	QTY	RANK
	R352	**RG007120**	Carbon Resistor (chip)	12K 0.1 J				
	R353	**RG006330**	Carbon Resistor (chip)	3.3K 0.1 J				
	R354	**RG007330**	Carbon Resistor (chip)	33K 0.1 J				
	R355	**RG008100**	Carbon Resistor (chip)	100K 0.1 J				
	R356	**RG005220**	Carbon Resistor (chip)	220 0.1 J				
*	R357	**RG206220**	Carbon Resistor (chip)	2.2K 1/4 J				
	R358	**RG007180**	Carbon Resistor (chip)	18K 0.1 J				
	R359	**RG005220**	Carbon Resistor (chip)	220 0.1 J				
	R360	**RG006470**	Carbon Resistor (chip)	4.7K 0.1 J				
	R361	**RG007100**	Carbon Resistor (chip)	10K 0.1 J				
	R362	**RG004100**	Carbon Resistor (chip)	10 0.1 J				
	R363	**RG008220**	Carbon Resistor (chip)	220K 0.1 J				
	R364	**RG007180**	Carbon Resistor (chip)	18K 0.1 J				
	-369	**RG007180**	Carbon Resistor (chip)	18K 0.1 J				
*	R370	**RG007360**	Carbon Resistor (chip)	36K 0.1 J				
*	R371	**RG007360**	Carbon Resistor (chip)	36K 0.1 J				
*	R401	**RG005180**	Carbon Resistor (chip)	180 0.1 J				
	R402	**VV065300**	Metal Film Resistor	6.8K 1/4 F				01
	R403	**VV065300**	Metal Film Resistor	6.8K 1/4 F				01
*	R404	**RF358100**	Carbon Resistor (chip)	100.0K : D 1608				01
*	R405	**RF358100**	Carbon Resistor (chip)	100.0K : D 1608				01
	R406	**RG007100**	Carbon Resistor (chip)	10K 0.1 J				
	R407	**RF357100**	Carbon Resistor (chip)	10.0K : D 1608				01
*	R408	**RF356110**	Carbon Resistor (chip)	1.1K : D 1608				
	R409	**RF357100**	Carbon Resistor (chip)	10.0K : D 1608				01
*	R410	**RF358100**	Carbon Resistor (chip)	100.0K : D 1608				01
*	R411	**RF358100**	Carbon Resistor (chip)	100.0K : D 1608				01
	R412	**RG007220**	Carbon Resistor (chip)	22K 0.1 J				
	R413	**RG006470**	Carbon Resistor (chip)	4.7K 0.1 J				
*	R414	**RF358100**	Carbon Resistor (chip)	100.0K : D 1608				01
*	R415	**RF358100**	Carbon Resistor (chip)	100.0K : D 1608				01
	R416	**RG004100**	Carbon Resistor (chip)	10 0.1 J				
*	R417	**RF356220**	Carbon Resistor (chip)	2.2K : D 1608				01
*	R418	**RF356820**	Carbon Resistor (chip)	8.2K : D 1608				
*	R419	**RF354200**	Carbon Resistor (chip)	20.0 : D 1608				01
*	R420	**RF357240**	Carbon Resistor (chip)	24.0K : D 1608				
*	R421	**RF356220**	Carbon Resistor (chip)	2.2K : D 1608				01
*	R422	**RF356820**	Carbon Resistor (chip)	8.2K : D 1608				
*	R423	**RF357240**	Carbon Resistor (chip)	24.0K : D 1608				
	R424	**RG004100**	Carbon Resistor (chip)	10 0.1 J				
*	R425	**RF356470**	Carbon Resistor (chip)	4.7K : D 1608				01
*	R426	**RF356470**	Carbon Resistor (chip)	4.7K : D 1608				01
	R427	**RG008220**	Carbon Resistor (chip)	220K 0.1 J				
*	R428	**RG007150**	Carbon Resistor (chip)	15K 0.1 J				
	R429	**RG007300**	Carbon Resistor (chip)	30K 0.1 J				
	R430	**RG004100**	Carbon Resistor (chip)	10 0.1 J				
	R431	**RG008220**	Carbon Resistor (chip)	220K 0.1 J				
	R432	**RG008220**	Carbon Resistor (chip)	220K 0.1 J				
	R433	**RG007100**	Carbon Resistor (chip)	10K 0.1 J				
	R434	**RG006470**	Carbon Resistor (chip)	4.7K 0.1 J				
	R435	**RG007330**	Carbon Resistor (chip)	33K 0.1 J				
	R436	**RG007100**	Carbon Resistor (chip)	10K 0.1 J				
	R437	**RG006560**	Carbon Resistor (chip)	5.6K 0.1 J				
	R438	**RG006470**	Carbon Resistor (chip)	4.7K 0.1 J				
	R439	**RG006820**	Carbon Resistor (chip)	8.2K 0.1 J				
	R440	**RG006470**	Carbon Resistor (chip)	4.7K 0.1 J				
	R441	**RG006820**	Carbon Resistor (chip)	8.2K 0.1 J				
	R442	**RG004100**	Carbon Resistor (chip)	10 0.1 J				
	R443	**RG008220**	Carbon Resistor (chip)	220K 0.1 J				
	R444	**RG006560**	Carbon Resistor (chip)	5.6K 0.1 J				
	-446	**RG006560**	Carbon Resistor (chip)	5.6K 0.1 J				
	R447	**RG007560**	Carbon Resistor (chip)	56K 0.1 J				
	R448	**RG007330**	Carbon Resistor (chip)	33K 0.1 J				
	R449	**RG006560**	Carbon Resistor (chip)	5.6K 0.1 J				
	R450	**RG008220**	Carbon Resistor (chip)	220K 0.1 J				
	R451	**RG005220**	Carbon Resistor (chip)	220 0.1 J				
	R452	**RG007120**	Carbon Resistor (chip)	12K 0.1 J				
	R453	**RG006330**	Carbon Resistor (chip)	3.3K 0.1 J				
	R454	**RG007330**	Carbon Resistor (chip)	33K 0.1 J				
	R455	**RG008100**	Carbon Resistor (chip)	100K 0.1 J				

*: New Parts

RANK: Japan only

	REF NO.	PART NO.	DESCRIPTION			REMARKS	QTY	RANK
	R456	**RG005220**	Carbon Resistor (chip)	220 0.1 J				
*	R457	**RG206220**	Carbon Resistor (chip)	2.2K 1/4 J				
	R458	**RG007180**	Carbon Resistor (chip)	18K 0.1 J				
	R459	**RG005220**	Carbon Resistor (chip)	220 0.1 J				
	R460	**RG006470**	Carbon Resistor (chip)	4.7K 0.1 J				
	R461	**RG007100**	Carbon Resistor (chip)	10K 0.1 J				
	R462	**RG004100**	Carbon Resistor (chip)	10 0.1 J				
	R463	**RG008220**	Carbon Resistor (chip)	220K 0.1 J				
	R464	**RG007180**	Carbon Resistor (chip)	18K 0.1 J				
	-469	**RG007180**	Carbon Resistor (chip)	18K 0.1 J				
*	R470	**RG007360**	Carbon Resistor (chip)	36K 0.1 J				
*	R471	**RG007360**	Carbon Resistor (chip)	36K 0.1 J				
	R472	**RG007120**	Carbon Resistor (chip)	12K 0.1 J				
	R473	**RG006150**	Carbon Resistor (chip)	1.5K 0.1 J				
	R474	**RG205100**	Carbon Resistor (chip)	100 1/4 J				
*	R501	**RG005180**	Carbon Resistor (chip)	180 0.1 J				
	R502	**VV065300**	Metal Film Resistor	6.8K 1/4 F				01
	R503	**VV065300**	Metal Film Resistor	6.8K 1/4 F				01
*	R504	**RF358100**	Carbon Resistor (chip)	100.0K : D 1608				01
*	R505	**RF358100**	Carbon Resistor (chip)	100.0K : D 1608				01
	R506	**RG007100**	Carbon Resistor (chip)	10K 0.1 J				
	R507	**RF357100**	Carbon Resistor (chip)	10.0K : D 1608				01
*	R508	**RF356110**	Carbon Resistor (chip)	1.1K : D 1608				
	R509	**RF357100**	Carbon Resistor (chip)	10.0K : D 1608				01
*	R510	**RF358100**	Carbon Resistor (chip)	100.0K : D 1608				01
*	R511	**RF358100**	Carbon Resistor (chip)	100.0K : D 1608				01
	R512	**RG007220**	Carbon Resistor (chip)	22K 0.1 J				
	R513	**RG006470**	Carbon Resistor (chip)	4.7K 0.1 J				
*	R514	**RF358100**	Carbon Resistor (chip)	100.0K : D 1608				01
*	R515	**RF358100**	Carbon Resistor (chip)	100.0K : D 1608				01
	R516	**RG004100**	Carbon Resistor (chip)	10 0.1 J				
*	R517	**RF356220**	Carbon Resistor (chip)	2.2K : D 1608				01
*	R518	**RF356820**	Carbon Resistor (chip)	8.2K : D 1608				
*	R519	**RF354200**	Carbon Resistor (chip)	20.0 : D 1608				01
*	R520	**RF357240**	Carbon Resistor (chip)	24.0K : D 1608				
*	R521	**RF356220**	Carbon Resistor (chip)	2.2K : D 1608				01
*	R522	**RF356820**	Carbon Resistor (chip)	8.2K : D 1608				
*	R523	**RF357240**	Carbon Resistor (chip)	24.0K : D 1608				
	R524	**RG004100**	Carbon Resistor (chip)	10 0.1 J				
*	R525	**RF356470**	Carbon Resistor (chip)	4.7K : D 1608				01
*	R526	**RF356470**	Carbon Resistor (chip)	4.7K : D 1608				01
	R527	**RG008220**	Carbon Resistor (chip)	220K 0.1 J				
*	R528	**RG007150**	Carbon Resistor (chip)	15K 0.1 J				
	R529	**RG007300**	Carbon Resistor (chip)	30K 0.1 J				
	R530	**RG004100**	Carbon Resistor (chip)	10 0.1 J				
	R531	**RG008220**	Carbon Resistor (chip)	220K 0.1 J				
	R532	**RG008220**	Carbon Resistor (chip)	220K 0.1 J				
	R533	**RG007100**	Carbon Resistor (chip)	10K 0.1 J				
	R534	**RG006470**	Carbon Resistor (chip)	4.7K 0.1 J				
	R535	**RG007330**	Carbon Resistor (chip)	33K 0.1 J				
	R536	**RG007100**	Carbon Resistor (chip)	10K 0.1 J				
	R537	**RG006560**	Carbon Resistor (chip)	5.6K 0.1 J				
	R538	**RG006470**	Carbon Resistor (chip)	4.7K 0.1 J				
	R539	**RG006820**	Carbon Resistor (chip)	8.2K 0.1 J				
	R540	**RG006470**	Carbon Resistor (chip)	4.7K 0.1 J				
	R541	**RG006820**	Carbon Resistor (chip)	8.2K 0.1 J				
	R542	**RG004100**	Carbon Resistor (chip)	10 0.1 J				
	R543	**RG008220**	Carbon Resistor (chip)	220K 0.1 J				
	R544	**RG006560**	Carbon Resistor (chip)	5.6K 0.1 J				
	-546	**RG006560**	Carbon Resistor (chip)	5.6K 0.1 J				
	R547	**RG007560**	Carbon Resistor (chip)	56K 0.1 J				
	R548	**RG007330**	Carbon Resistor (chip)	33K 0.1 J				
	R549	**RG006560**	Carbon Resistor (chip)	5.6K 0.1 J				
	R550	**RG008220**	Carbon Resistor (chip)	220K 0.1 J				
	R551	**RG005220**	Carbon Resistor (chip)	220 0.1 J				
	R552	**RG007120**	Carbon Resistor (chip)	12K 0.1 J				
	R553	**RG006330**	Carbon Resistor (chip)	3.3K 0.1 J				
	R554	**RG007330**	Carbon Resistor (chip)	33K 0.1 J				
	R555	**RG008100**	Carbon Resistor (chip)	100K 0.1 J				
	R556	**RG005220**	Carbon Resistor (chip)	220 0.1 J				

*: New Parts

RANK: Japan only

	REF NO.	PART NO.	DESCRIPTION			REMARKS	QTY	RANK
*	R557	**RG206220**	Carbon Resistor (chip)	2.2K 1/4 J				
	R558	**RG007180**	Carbon Resistor (chip)	18K 0.1 J				
	R559	**RG005220**	Carbon Resistor (chip)	220 0.1 J				
	R560	**RG006470**	Carbon Resistor (chip)	4.7K 0.1 J				
	R561	**RG007100**	Carbon Resistor (chip)	10K 0.1 J				
	R562	**RG004100**	Carbon Resistor (chip)	10 0.1 J				
	R563	**RG008220**	Carbon Resistor (chip)	220K 0.1 J				
	R564	**RG007180**	Carbon Resistor (chip)	18K 0.1 J				
	-569	**RG007180**	Carbon Resistor (chip)	18K 0.1 J				
*	R570	**RG007360**	Carbon Resistor (chip)	36K 0.1 J				
*	R571	**RG007360**	Carbon Resistor (chip)	36K 0.1 J				
	R572	**RG008100**	Carbon Resistor (chip)	100K 0.1 J				
	R573	**VV276800**	Flame Proof C. Resistor	100 1/4 J				01
*	R601	**RG005180**	Carbon Resistor (chip)	180 0.1 J				
	R602	**VV065300**	Metal Film Resistor	6.8K 1/4 F				01
	R603	**VV065300**	Metal Film Resistor	6.8K 1/4 F				01
*	R604	**RF358100**	Carbon Resistor (chip)	100.0K : D 1608				01
*	R605	**RF358100**	Carbon Resistor (chip)	100.0K : D 1608				01
	R606	**RG007100**	Carbon Resistor (chip)	10K 0.1 J				
	R607	**RF357100**	Carbon Resistor (chip)	10.0K : D 1608				01
*	R608	**RF356110**	Carbon Resistor (chip)	1.1K : D 1608				
	R609	**RF357100**	Carbon Resistor (chip)	10.0K : D 1608				01
*	R610	**RF358100**	Carbon Resistor (chip)	100.0K : D 1608				01
*	R611	**RF358100**	Carbon Resistor (chip)	100.0K : D 1608				01
	R612	**RG007220**	Carbon Resistor (chip)	22K 0.1 J				
	R613	**RG006470**	Carbon Resistor (chip)	4.7K 0.1 J				
*	R614	**RF358100**	Carbon Resistor (chip)	100.0K : D 1608				01
*	R615	**RF358100**	Carbon Resistor (chip)	100.0K : D 1608				01
*	R616	**RG004100**	Carbon Resistor (chip)	10 0.1 J				
*	R617	**RF356220**	Carbon Resistor (chip)	2.2K : D 1608				01
*	R618	**RF356820**	Carbon Resistor (chip)	8.2K : D 1608				
*	R619	**RF354200**	Carbon Resistor (chip)	20.0 : D 1608				01
*	R620	**RF357240**	Carbon Resistor (chip)	24.0K : D 1608				
*	R621	**RF356220**	Carbon Resistor (chip)	2.2K : D 1608				01
*	R622	**RF356820**	Carbon Resistor (chip)	8.2K : D 1608				
*	R623	**RF357240**	Carbon Resistor (chip)	24.0K : D 1608				
	R624	**RG004100**	Carbon Resistor (chip)	10 0.1 J				
*	R625	**RF356470**	Carbon Resistor (chip)	4.7K : D 1608				01
*	R626	**RF356470**	Carbon Resistor (chip)	4.7K : D 1608				01
	R627	**RG008220**	Carbon Resistor (chip)	220K 0.1 J				
*	R628	**RG007150**	Carbon Resistor (chip)	15K 0.1 J				
	R629	**RG007300**	Carbon Resistor (chip)	30K 0.1 J				
	R630	**RG004100**	Carbon Resistor (chip)	10 0.1 J				
	R631	**RG008220**	Carbon Resistor (chip)	220K 0.1 J				
	R632	**RG008220**	Carbon Resistor (chip)	220K 0.1 J				
	R633	**RG007100**	Carbon Resistor (chip)	10K 0.1 J				
	R634	**RG006470**	Carbon Resistor (chip)	4.7K 0.1 J				
	R635	**RG007330**	Carbon Resistor (chip)	33K 0.1 J				
	R636	**RG007100**	Carbon Resistor (chip)	10K 0.1 J				
	R637	**RG006560**	Carbon Resistor (chip)	5.6K 0.1 J				
	R638	**RG006470**	Carbon Resistor (chip)	4.7K 0.1 J				
	R639	**RG006820**	Carbon Resistor (chip)	8.2K 0.1 J				
	R640	**RG006470**	Carbon Resistor (chip)	4.7K 0.1 J				
	R641	**RG006820**	Carbon Resistor (chip)	8.2K 0.1 J				
	R642	**RG004100**	Carbon Resistor (chip)	10 0.1 J				
	R643	**RG008220**	Carbon Resistor (chip)	220K 0.1 J				
	R644	**RG006560**	Carbon Resistor (chip)	5.6K 0.1 J				
	-646	**RG006560**	Carbon Resistor (chip)	5.6K 0.1 J				
	R647	**RG007560**	Carbon Resistor (chip)	56K 0.1 J				
	R648	**RG007330**	Carbon Resistor (chip)	33K 0.1 J				
	R649	**RG006560**	Carbon Resistor (chip)	5.6K 0.1 J				
	R650	**RG008220**	Carbon Resistor (chip)	220K 0.1 J				
	R651	**RG005220**	Carbon Resistor (chip)	220 0.1 J				
	R652	**RG007120**	Carbon Resistor (chip)	12K 0.1 J				
	R653	**RG006330**	Carbon Resistor (chip)	3.3K 0.1 J				
	R654	**RG007330**	Carbon Resistor (chip)	33K 0.1 J				
	R655	**RG008100**	Carbon Resistor (chip)	100K 0.1 J				
	R656	**RG005220**	Carbon Resistor (chip)	220 0.1 J				
*	R657	**RG206220**	Carbon Resistor (chip)	2.2K 1/4 J				
	R658	**RG007180**	Carbon Resistor (chip)	18K 0.1 J				

❇: New Parts

RANK: Japan only

	REF NO.	PART NO.	DESCRIPTION			REMARKS	QTY	RANK
	R659	**RG005220**	Carbon Resistor (chip)	220 0.1 J				
	R660	**RG006470**	Carbon Resistor (chip)	4.7K 0.1 J				
	R661	**RG007100**	Carbon Resistor (chip)	10K 0.1 J				
	R662	**RG004100**	Carbon Resistor (chip)	10 0.1 J				
	R663	**RG008220**	Carbon Resistor (chip)	220K 0.1 J				
	R664	**RG007180**	Carbon Resistor (chip)	18K 0.1 J				
	-669	**RG007180**	Carbon Resistor (chip)	18K 0.1 J				
*	R670	**RG007360**	Carbon Resistor (chip)	36K 0.1 J				
*	R671	**RG007360**	Carbon Resistor (chip)	36K 0.1 J				
*	R701	**RG005180**	Carbon Resistor (chip)	180 0.1 J				
	R702	**VV065300**	Metal Film Resistor	6.8K 1/4 F				01
	R703	**VV065300**	Metal Film Resistor	6.8K 1/4 F				01
*	R704	**RF358100**	Carbon Resistor (chip)	100.0K : D 1608				01
*	R705	**RF358100**	Carbon Resistor (chip)	100.0K : D 1608				01
	R706	**RG007100**	Carbon Resistor (chip)	10K 0.1 J				
	R707	**RF357100**	Carbon Resistor (chip)	10.0K : D 1608				01
*	R708	**RF356110**	Carbon Resistor (chip)	1.1K : D 1608				
	R709	**RF357100**	Carbon Resistor (chip)	10.0K : D 1608				01
*	R710	**RF358100**	Carbon Resistor (chip)	100.0K : D 1608				01
*	R711	**RF358100**	Carbon Resistor (chip)	100.0K : D 1608				01
	R712	**RG007220**	Carbon Resistor (chip)	22K 0.1 J				
	R713	**RG006470**	Carbon Resistor (chip)	4.7K 0.1 J				
*	R714	**RF358100**	Carbon Resistor (chip)	100.0K : D 1608				01
*	R715	**RF358100**	Carbon Resistor (chip)	100.0K : D 1608				01
	R716	**RG004100**	Carbon Resistor (chip)	10 0.1 J				
*	R717	**RF356220**	Carbon Resistor (chip)	2.2K : D 1608				01
*	R718	**RF356820**	Carbon Resistor (chip)	8.2K : D 1608				
*	R719	**RF354200**	Carbon Resistor (chip)	20.0 : D 1608				01
*	R720	**RF357240**	Carbon Resistor (chip)	24.0K : D 1608				
*	R721	**RF356220**	Carbon Resistor (chip)	2.2K : D 1608				01
*	R722	**RF356820**	Carbon Resistor (chip)	8.2K : D 1608				
*	R723	**RF357240**	Carbon Resistor (chip)	24.0K : D 1608				
	R724	**RG004100**	Carbon Resistor (chip)	10 0.1 J				
*	R725	**RF356470**	Carbon Resistor (chip)	4.7K : D 1608				01
*	R726	**RF356470**	Carbon Resistor (chip)	4.7K : D 1608				01
	R727	**RG008220**	Carbon Resistor (chip)	220K 0.1 J				
*	R728	**RG007150**	Carbon Resistor (chip)	15K 0.1 J				
	R729	**RG007300**	Carbon Resistor (chip)	30K 0.1 J				
	R730	**RG004100**	Carbon Resistor (chip)	10 0.1 J				
	R731	**RG008220**	Carbon Resistor (chip)	220K 0.1 J				
	R732	**RG008220**	Carbon Resistor (chip)	220K 0.1 J				
	R733	**RG007100**	Carbon Resistor (chip)	10K 0.1 J				
	R734	**RG006470**	Carbon Resistor (chip)	4.7K 0.1 J				
	R735	**RG007330**	Carbon Resistor (chip)	33K 0.1 J				
	R736	**RG007100**	Carbon Resistor (chip)	10K 0.1 J				
	R737	**RG006560**	Carbon Resistor (chip)	5.6K 0.1 J				
	R738	**RG006470**	Carbon Resistor (chip)	4.7K 0.1 J				
	R739	**RG006820**	Carbon Resistor (chip)	8.2K 0.1 J				
	R740	**RG006470**	Carbon Resistor (chip)	4.7K 0.1 J				
	R741	**RG006820**	Carbon Resistor (chip)	8.2K 0.1 J				
	R742	**RG004100**	Carbon Resistor (chip)	10 0.1 J				
	R743	**RG008220**	Carbon Resistor (chip)	220K 0.1 J				
	R744	**RG006560**	Carbon Resistor (chip)	5.6K 0.1 J				
	-746	**RG006560**	Carbon Resistor (chip)	5.6K 0.1 J				
	R747	**RG007560**	Carbon Resistor (chip)	56K 0.1 J				
	R748	**RG007330**	Carbon Resistor (chip)	33K 0.1 J				
	R749	**RG006560**	Carbon Resistor (chip)	5.6K 0.1 J				
	R750	**RG008220**	Carbon Resistor (chip)	220K 0.1 J				
	R751	**RG005220**	Carbon Resistor (chip)	220 0.1 J				
	R752	**RG007120**	Carbon Resistor (chip)	12K 0.1 J				
	R753	**RG006330**	Carbon Resistor (chip)	3.3K 0.1 J				
	R754	**RG007330**	Carbon Resistor (chip)	33K 0.1 J				
	R755	**RG008100**	Carbon Resistor (chip)	100K 0.1 J				
	R756	**RG005220**	Carbon Resistor (chip)	220 0.1 J				
*	R757	**RG206220**	Carbon Resistor (chip)	2.2K 1/4 J				
	R758	**RG007180**	Carbon Resistor (chip)	18K 0.1 J				
	R759	**RG005220**	Carbon Resistor (chip)	220 0.1 J				
	R760	**RG006470**	Carbon Resistor (chip)	4.7K 0.1 J				
	R761	**RG007100**	Carbon Resistor (chip)	10K 0.1 J				
	R762	**RG004100**	Carbon Resistor (chip)	10 0.1 J				

*: New Parts

RANK: Japan only

	REF NO.	PART NO.	DESCRIPTION			REMARKS	QTY	RANK
	R763	**RG008220**	Carbon Resistor (chip)	220K 0.1 J				
	R764	**RG007180**	Carbon Resistor (chip)	18K 0.1 J				
	-769	**RG007180**	Carbon Resistor (chip)	18K 0.1 J				
*	R770	**RG007360**	Carbon Resistor (chip)	36K 0.1 J				
*	R771	**RG007360**	Carbon Resistor (chip)	36K 0.1 J				
*	R801	**RG005180**	Carbon Resistor (chip)	180 0.1 J				
	R802	**VV065300**	Metal Film Resistor	6.8K 1/4 F				01
	R803	**VV065300**	Metal Film Resistor	6.8K 1/4 F				01
*	R804	**RF358100**	Carbon Resistor (chip)	100.0K : D 1608				01
*	R805	**RF358100**	Carbon Resistor (chip)	100.0K : D 1608				01
	R806	**RG007100**	Carbon Resistor (chip)	10K 0.1 J				
	R807	**RF357100**	Carbon Resistor (chip)	10.0K : D 1608				01
*	R808	**RF356110**	Carbon Resistor (chip)	1.1K : D 1608				
	R809	**RF357100**	Carbon Resistor (chip)	10.0K : D 1608				01
*	R810	**RF358100**	Carbon Resistor (chip)	100.0K : D 1608				01
*	R811	**RF358100**	Carbon Resistor (chip)	100.0K : D 1608				01
	R812	**RG007220**	Carbon Resistor (chip)	22K 0.1 J				
	R813	**RG006470**	Carbon Resistor (chip)	4.7K 0.1 J				
*	R814	**RF358100**	Carbon Resistor (chip)	100.0K : D 1608				01
*	R815	**RF358100**	Carbon Resistor (chip)	100.0K : D 1608				01
	R816	**RG004100**	Carbon Resistor (chip)	10 0.1 J				
*	R817	**RF356220**	Carbon Resistor (chip)	2.2K : D 1608				01
*	R818	**RF356820**	Carbon Resistor (chip)	8.2K : D 1608				
*	R819	**RF354200**	Carbon Resistor (chip)	20.0 : D 1608				01
*	R820	**RF357240**	Carbon Resistor (chip)	24.0K : D 1608				
*	R821	**RF356220**	Carbon Resistor (chip)	2.2K : D 1608				01
*	R822	**RF356820**	Carbon Resistor (chip)	8.2K : D 1608				
*	R823	**RF357240**	Carbon Resistor (chip)	24.0K : D 1608				
	R824	**RG004100**	Carbon Resistor (chip)	10 0.1 J				
*	R825	**RF356470**	Carbon Resistor (chip)	4.7K : D 1608				01
*	R826	**RF356470**	Carbon Resistor (chip)	4.7K : D 1608				01
	R827	**RG008220**	Carbon Resistor (chip)	220K 0.1 J				
*	R828	**RG007150**	Carbon Resistor (chip)	15K 0.1 J				
	R829	**RG007300**	Carbon Resistor (chip)	30K 0.1 J				
	R830	**RG004100**	Carbon Resistor (chip)	10 0.1 J				
	R831	**RG008220**	Carbon Resistor (chip)	220K 0.1 J				
	R832	**RG008220**	Carbon Resistor (chip)	220K 0.1 J				
	R833	**RG007100**	Carbon Resistor (chip)	10K 0.1 J				
	R834	**RG006470**	Carbon Resistor (chip)	4.7K 0.1 J				
	R835	**RG007330**	Carbon Resistor (chip)	33K 0.1 J				
	R836	**RG007100**	Carbon Resistor (chip)	10K 0.1 J				
	R837	**RG006560**	Carbon Resistor (chip)	5.6K 0.1 J				
	R838	**RG006470**	Carbon Resistor (chip)	4.7K 0.1 J				
	R839	**RG006820**	Carbon Resistor (chip)	8.2K 0.1 J				
	R840	**RG006470**	Carbon Resistor (chip)	4.7K 0.1 J				
	R841	**RG006820**	Carbon Resistor (chip)	8.2K 0.1 J				
	R842	**RG004100**	Carbon Resistor (chip)	10 0.1 J				
	R843	**RG008220**	Carbon Resistor (chip)	220K 0.1 J				
	R844	**RG006560**	Carbon Resistor (chip)	5.6K 0.1 J				
	-846	**RG006560**	Carbon Resistor (chip)	5.6K 0.1 J				
	R847	**RG007560**	Carbon Resistor (chip)	56K 0.1 J				
	R848	**RG007330**	Carbon Resistor (chip)	33K 0.1 J				
	R849	**RG006560**	Carbon Resistor (chip)	5.6K 0.1 J				
	R850	**RG008220**	Carbon Resistor (chip)	220K 0.1 J				
	R851	**RG005220**	Carbon Resistor (chip)	220 0.1 J				
	R852	**RG007120**	Carbon Resistor (chip)	12K 0.1 J				
	R853	**RG006330**	Carbon Resistor (chip)	3.3K 0.1 J				
	R854	**RG007330**	Carbon Resistor (chip)	33K 0.1 J				
	R855	**RG008100**	Carbon Resistor (chip)	100K 0.1 J				
	R856	**RG005220**	Carbon Resistor (chip)	220 0.1 J				
*	R857	**RG206220**	Carbon Resistor (chip)	2.2K 1/4 J				
	R858	**RG007180**	Carbon Resistor (chip)	18K 0.1 J				
	R859	**RG005220**	Carbon Resistor (chip)	220 0.1 J				
	R860	**RG006470**	Carbon Resistor (chip)	4.7K 0.1 J				
	R861	**RG007100**	Carbon Resistor (chip)	10K 0.1 J				
	R862	**RG004100**	Carbon Resistor (chip)	10 0.1 J				
	R863	**RG008220**	Carbon Resistor (chip)	220K 0.1 J				
	R864	**RG007180**	Carbon Resistor (chip)	18K 0.1 J				
	-869	**RG007180**	Carbon Resistor (chip)	18K 0.1 J				
*	R870	**RG007360**	Carbon Resistor (chip)	36K 0.1 J				

❇: New Parts

RANK: Japan only

	REF NO.	PART NO.	DESCRIPTION			REMARKS	QTY	RANK
*	R871	**RG007360**	Carbon Resistor (chip)	36K 0.1 J				
	R872	**RG007120**	Carbon Resistor (chip)	12K 0.1 J				
	R873	**RG006150**	Carbon Resistor (chip)	1.5K 0.1 J				
	R874	**RG205100**	Carbon Resistor (chip)	100 1/4 J				
*	R901	**RG206270**	Carbon Resistor (chip)	2.7K 1/4 J				
	RJ01	**RG000000**	Carbon Resistor (chip)	0 0.1 J				
	-15	**RG000000**	Carbon Resistor (chip)	0 0.1 J				
	SW101	**V6962600**	Push Switch			26dB(CH9)		02
	SW102	**V6962600**	Push Switch			/80 (CH9)		02
	SW103	**V6962600**	Push Switch			CH ON(CH9)		02
	SW104	**V6962600**	Push Switch			AUX1 POST(CH9)		02
	SW105	**V6962600**	Push Switch			AUX2 POST(CH9)		02
	SW106	**V6962600**	Push Switch			PFL(CH9)		02
	SW201	**V6962600**	Push Switch			26dB(CH10)		02
	SW202	**V6962600**	Push Switch			/80 (CH10)		02
	SW203	**V6962600**	Push Switch			CH ON(CH10)		02
	SW204	**V6962600**	Push Switch			AUX1 POST(CH10)		02
	SW205	**V6962600**	Push Switch			AUX2 POST(CH10)		02
	SW206	**V6962600**	Push Switch			PFL(CH10)		02
	SW301	**V6962600**	Push Switch			26dB(CH11)		02
	SW302	**V6962600**	Push Switch			/80 (CH11)		02
	SW303	**V6962600**	Push Switch			CH ON(CH11)		02
	SW304	**V6962600**	Push Switch			AUX1 POST(CH11)		02
	SW305	**V6962600**	Push Switch			AUX2 POST(CH11)		02
	SW306	**V6962600**	Push Switch			PFL(CH11)		02
	SW401	**V6962600**	Push Switch			26dB(CH12)		02
	SW402	**V6962600**	Push Switch			/80 (CH12)		02
	SW403	**V6962600**	Push Switch			CH ON(CH12)		02
	SW404	**V6962600**	Push Switch			AUX1 POST(CH12)		02
	SW405	**V6962600**	Push Switch			AUX2 POST(CH12)		02
	SW406	**V6962600**	Push Switch			PFL(CH13)		02
	SW501	**V6962600**	Push Switch			26dB(CH13)		02
	SW502	**V6962600**	Push Switch			/80 (CH13)		02
	SW503	**V6962600**	Push Switch			CH ON(CH13)		02
	SW504	**V6962600**	Push Switch			AUX1 POST(CH13)		02
	SW505	**V6962600**	Push Switch			AUX2 POST(CH13)		02
	SW506	**V6962600**	Push Switch			PFL(CH5,14)		02
	SW601	**V6962600**	Push Switch			26dB(CH14)		02
	SW602	**V6962600**	Push Switch			/80 (CH14)		02
	SW603	**V6962600**	Push Switch			CH ON(CH14)		02
	SW604	**V6962600**	Push Switch			AUX1 POST(CH14)		02
	SW605	**V6962600**	Push Switch			AUX2 POST(CH14)		02
	SW606	**V6962600**	Push Switch			PFL(CH614)		02
	SW701	**V6962600**	Push Switch			26dB(CH15)		02
	SW702	**V6962600**	Push Switch			/80 (CH15)		02
	SW703	**V6962600**	Push Switch			CH ON(CH15)		02
	SW704	**V6962600**	Push Switch			AUX1 POST(CH15)		02
	SW705	**V6962600**	Push Switch			AUX2 POST(CH15)		02
	SW706	**V6962600**	Push Switch			PFL(CH15)		02
	SW801	**V6962600**	Push Switch			26dB(CH16)		02
	SW802	**V6962600**	Push Switch			/80 (CH16)		02
	SW803	**V6962600**	Push Switch			CH ON(CH16)		02
	SW804	**V6962600**	Push Switch			AUX1 POST(CH16)		02
	SW805	**V6962600**	Push Switch			AUX2 POST(CH16)		02
	SW806	**V6962600**	Push Switch			PFL(CH16)		02
	SW901	**V2802400**	Slide Switch	SS001-P022BQB-PA14		PHANTOM ON/OFF		03
*	VR101	**V8393200**	Rotary Variable Resistor	RD 5.0K XV09213P		GAIN(CH9)		
*	VR102	**V8264700**	Rotary Variable Resistor	B 50.0K XV09213P		LOW(CH9)		01
*	VR103	**V8264700**	Rotary Variable Resistor	B 50.0K XV09213P		HIGH(CH9)		01
	VR104	**VZ611200**	Rotary Variable Resistor	C 100K RK12L123		MID-f(CH9)		05
*	VR105	**V8393300**	Rotary Variable Resistor	W 20.0K XV09213P		MID(CH9)		
	VR106	**VU804100**	Slide Variable Resistor	RS6011YG6036-10KA		FADER(CH9)		04
	VR107	**VZ610800**	Rotary Variable Resistor	AC 20K RK12L123		PAN(CH9)		03
*	VR108	**V8264600**	Rotary Variable Resistor	A 20.0K XV09213P		AUX1(CH9)		01
*	VR109	**V8264600**	Rotary Variable Resistor	A 20.0K XV09213P		AUX2(CH9)		01
*	VR110	**V8264600**	Rotary Variable Resistor	A 20.0K XV09213P		EFFECT1(CH9)		01
*	VR111	**V8264600**	Rotary Variable Resistor	A 20.0K XV09213P		EFFECT2(CH9)		01
*	VR201	**V8393200**	Rotary Variable Resistor	RD 5.0K XV09213P		GAIN(CH10)		
*	VR202	**V8264700**	Rotary Variable Resistor	B 50.0K XV09213P		LOW(CH10)		01
*	VR203	**V8264700**	Rotary Variable Resistor	B 50.0K XV09213P		HIGH(CH10)		01

*: New Parts

RANK: Japan only

	REF NO.	PART NO.	DESCRIPTION			REMARKS	QTY	RANK
	VR204	**VZ611200**	Rotary Variable Resistor	C 100K RK12L123		MID-f(CH10)		05
*	VR205	**V8393300**	Rotary Variable Resistor	W 20.0K XV09213P		MID(CH10)		
	VR206	**VU804100**	Slide Variable Resistor	RS6011YG6036-10KA		FADER(CH10)		04
	VR207	**VZ610800**	Rotary Variable Resistor	AC 20K RK12L123		PAN(CH10)		03
*	VR208	**V8264600**	Rotary Variable Resistor	A 20.0K XV09213P		AUX1(CH10)		01
*	VR209	**V8264600**	Rotary Variable Resistor	A 20.0K XV09213P		AUX2(CH10)		01
*	VR210	**V8264600**	Rotary Variable Resistor	A 20.0K XV09213P		EFFECT1(CH10)		01
*	VR211	**V8264600**	Rotary Variable Resistor	A 20.0K XV09213P		EFFECT2(CH10)		01
*	VR301	**V8393200**	Rotary Variable Resistor	RD 5.0K XV09213P		GAIN(CH11)		
*	VR302	**V8264700**	Rotary Variable Resistor	B 50.0K XV09213P		LOW(CH11)		01
*	VR303	**V8264700**	Rotary Variable Resistor	B 50.0K XV09213P		HIGH(CH11)		01
	VR304	**VZ611200**	Rotary Variable Resistor	C 100K RK12L123		MID-f(CH11)		05
*	VR305	**V8393300**	Rotary Variable Resistor	W 20.0K XV09213P		MID(CH11)		
	VR306	**VU804100**	Slide Variable Resistor	RS6011YG6036-10KA		FADER(CH11)		04
	VR307	**VZ610800**	Rotary Variable Resistor	AC 20K RK12L123		PAN(CH11)		03
*	VR308	**V8264600**	Rotary Variable Resistor	A 20.0K XV09213P		AUX1(CH11)		01
*	VR309	**V8264600**	Rotary Variable Resistor	A 20.0K XV09213P		AUX2(CH11)		01
*	VR310	**V8264600**	Rotary Variable Resistor	A 20.0K XV09213P		EFFECT1(CH11)		01
*	VR311	**V8264600**	Rotary Variable Resistor	A 20.0K XV09213P		EFFECT2(CH11)		01
*	VR401	**V8393200**	Rotary Variable Resistor	RD 5.0K XV09213P		GAIN(CH12)		
*	VR402	**V8264700**	Rotary Variable Resistor	B 50.0K XV09213P		LOW(CH12)		01
*	VR403	**V8264700**	Rotary Variable Resistor	B 50.0K XV09213P		HIGH(CH12)		01
	VR404	**VZ611200**	Rotary Variable Resistor	C 100K RK12L123		MID-f(CH12)		05
*	VR405	**V8393300**	Rotary Variable Resistor	W 20.0K XV09213P		MID(CH12)		
	VR406	**VU804100**	Slide Variable Resistor	RS6011YG6036-10KA		FADER(CH12)		04
	VR407	**VZ610800**	Rotary Variable Resistor	AC 20K RK12L123		PAN(CH12)		03
*	VR408	**V8264600**	Rotary Variable Resistor	A 20.0K XV09213P		AUX1(CH12)		01
*	VR409	**V8264600**	Rotary Variable Resistor	A 20.0K XV09213P		AUX2(CH12)		01
*	VR410	**V8264600**	Rotary Variable Resistor	A 20.0K XV09213P		EFFECT1(CH12)		01
*	VR411	**V8264600**	Rotary Variable Resistor	A 20.0K XV09213P		EFFECT2(CH12)		01
*	VR501	**V8393200**	Rotary Variable Resistor	RD 5.0K XV09213P		GAIN(CH13)		
*	VR502	**V8264700**	Rotary Variable Resistor	B 50.0K XV09213P		LOW(CH13)		01
*	VR503	**V8264700**	Rotary Variable Resistor	B 50.0K XV09213P		HIGH(CH13)		01
	VR504	**VZ611200**	Rotary Variable Resistor	C 100K RK12L123		MID-f(CH13)		05
*	VR505	**V8393300**	Rotary Variable Resistor	W 20.0K XV09213P		MID(CH13)		
	VR506	**VU804100**	Slide Variable Resistor	RS6011YG6036-10KA		FADER(CH13)		04
	VR507	**VZ610800**	Rotary Variable Resistor	AC 20K RK12L123		PAN(CH13)		03
*	VR508	**V8264600**	Rotary Variable Resistor	A 20.0K XV09213P		AUX1(CH13)		01
*	VR509	**V8264600**	Rotary Variable Resistor	A 20.0K XV09213P		AUX2(CH13)		01
*	VR510	**V8264600**	Rotary Variable Resistor	A 20.0K XV09213P		EFFECT1(CH13)		01
*	VR511	**V8264600**	Rotary Variable Resistor	A 20.0K XV09213P		EFFECT2(CH13)		01
*	VR601	**V8393200**	Rotary Variable Resistor	RD 5.0K XV09213P		GAIN(CH14)		
*	VR602	**V8264700**	Rotary Variable Resistor	B 50.0K XV09213P		LOW(CH14)		01
*	VR603	**V8264700**	Rotary Variable Resistor	B 50.0K XV09213P		HIGH(CH14)		01
	VR604	**VZ611200**	Rotary Variable Resistor	C 100K RK12L123		MID-f(CH14)		05
*	VR605	**V8393300**	Rotary Variable Resistor	W 20.0K XV09213P		MID(CH14)		
	VR606	**VU804100**	Slide Variable Resistor	RS6011YG6036-10KA		FADER(CH14)		04
	VR607	**VZ610800**	Rotary Variable Resistor	AC 20K RK12L123		PAN(CH14)		03
*	VR608	**V8264600**	Rotary Variable Resistor	A 20.0K XV09213P		AUX1(CH14)		01
*	VR609	**V8264600**	Rotary Variable Resistor	A 20.0K XV09213P		AUX2(CH14)		01
*	VR610	**V8264600**	Rotary Variable Resistor	A 20.0K XV09213P		EFFECT1(CH14)		01
*	VR611	**V8264600**	Rotary Variable Resistor	A 20.0K XV09213P		EFFECT2(CH14)		01
*	VR701	**V8393200**	Rotary Variable Resistor	RD 5.0K XV09213P		GAIN(CH15)		
*	VR702	**V8264700**	Rotary Variable Resistor	B 50.0K XV09213P		LOW(CH15)		01
*	VR703	**V8264700**	Rotary Variable Resistor	B 50.0K XV09213P		HIGH(CH15)		01
	VR704	**VZ611200**	Rotary Variable Resistor	C 100K RK12L123		MID-f(CH15)		05
*	VR705	**V8393300**	Rotary Variable Resistor	W 20.0K XV09213P		MID(CH15)		
	VR706	**VU804100**	Slide Variable Resistor	RS6011YG6036-10KA		FADER(CH15)		04
	VR707	**VZ610800**	Rotary Variable Resistor	AC 20K RK12L123		PAN(CH15)		03
*	VR708	**V8264600**	Rotary Variable Resistor	A 20.0K XV09213P		AUX1(CH15)		01
*	VR709	**V8264600**	Rotary Variable Resistor	A 20.0K XV09213P		AUX2(CH15)		01
*	VR710	**V8264600**	Rotary Variable Resistor	A 20.0K XV09213P		EFFECT1(CH15)		01
*	VR711	**V8264600**	Rotary Variable Resistor	A 20.0K XV09213P		EFFECT2(CH15)		01
*	VR801	**V8393200**	Rotary Variable Resistor	RD 5.0K XV09213P		GAIN(CH16)		
*	VR802	**V8264700**	Rotary Variable Resistor	B 50.0K XV09213P		LOW(CH16)		01
*	VR803	**V8264700**	Rotary Variable Resistor	B 50.0K XV09213P		HIGH(CH16)		01
	VR804	**VZ611200**	Rotary Variable Resistor	C 100K RK12L123		MID-f(CH16)		05
*	VR805	**V8393300**	Rotary Variable Resistor	W 20.0K XV09213P		MID(CH16)		
	VR806	**VU804100**	Slide Variable Resistor	RS6011YG6036-10KA		FADER(CH16)		04
	VR807	**VZ610800**	Rotary Variable Resistor	AC 20K RK12L123		PAN(CH16)		03

✻: New Parts

RANK: Japan only

	REF NO.	PART NO.	DESCRIPTION			REMARKS	QTY	RANK
*	VR808	**V8264600**	Rotary Variable Resistor	A 20.0K XV09213P		AUX1(CH16)		01
*	VR809	**V8264600**	Rotary Variable Resistor	A 20.0K XV09213P		AUX2(CH16)		01
*	VR810	**V8264600**	Rotary Variable Resistor	A 20.0K XV09213P		EFFECT1(CH16)		01
*	VR811	**V8264600**	Rotary Variable Resistor	A 20.0K XV09213P		EFFECT2(CH16)		01
	ZD101	**VU171800**	Zener Diode	UDZ 4.7BTE-17 4.7V				01
	ZD201	**VU171800**	Zener Diode	UDZ 4.7BTE-17 4.7V				01
	ZD301	**VU171800**	Zener Diode	UDZ 4.7BTE-17 4.7V				01
	ZD401	**VU171800**	Zener Diode	UDZ 4.7BTE-17 4.7V				01
	ZD501	**VU171800**	Zener Diode	UDZ 4.7BTE-17 4.7V				01
	ZD601	**VU171800**	Zener Diode	UDZ 4.7BTE-17 4.7V				01
	ZD701	**VU171800**	Zener Diode	UDZ 4.7BTE-17 4.7V				01
	ZD801	**VU171800**	Zener Diode	UDZ 4.7BTE-17 4.7V				01
*		**V8267500**	Circuit Board	MAS		EMX5000-20 (X0656B0)		
		V4467500	Button	CD-GRAY/WHITE		AUX1(CH17/18,19/20), AUX2 (CH17/18,19/20), PFL(CH17 /18,19/20, EFFECT1, EFFEC T2, ST SUB IN1, ST SUB IN 2, 2TR IN, ST OUT), AFL(A UX1, AUX2, MONO OUT, ST O UT), ST GRAPHIC EQUALIZER	17	01
		VV307300	LED Spacer				15	01
		VZ968600	Button	NO.947 CD-GRAY		CH ON(CH17/18, 19/20, EFF ECT1, EFFECT2, TAP, STAND BY)	6	01
		V8454100	LED Holder				2	
		--	Jumper Wire	0.60		(VV29140)	343	01
		--	Jumper Wire	0.60 TP		(V829020)	65	
	C101	**UR847100**	Electrolytic Cap.	10.00 25.0V				01
	C102	**UR847100**	Electrolytic Cap.	10.00 25.0V				01
*	C103	**UX062330**	Ceramic Capacitor (Chip)	330P 50V J				
*	C104	**UX062330**	Ceramic Capacitor (Chip)	330P 50V J				
	C105	**UX062100**	Ceramic Capacitor (Chip)	100P 50V J				01
	C106	**UX062100**	Ceramic Capacitor (Chip)	100P 50V J				01
	C107	**UR828470**	Electrolytic Cap.	470.00 10.0V				01
	C108	**UR828470**	Electrolytic Cap.	470.00 10.0V				01
*	C109	**UX062330**	Ceramic Capacitor (Chip)	330P 50V J				
*	C110	**UX062330**	Ceramic Capacitor (Chip)	330P 50V J				
	C111	**UX061470**	Ceramic Capacitor (Chip)	47P 50V J				
	C112	**UX061470**	Ceramic Capacitor (Chip)	47P 50V J				
	C113	**UR847100**	Electrolytic Cap.	10.00 25.0V				01
	C114	**UR847100**	Electrolytic Cap.	10.00 25.0V				01
	C115	**UA954100**	Mylar Capacitor	0.0100 50V J				01
	C116	**UA954120**	Mylar Capacitor	0.0120 50V J				
	C117	**UA954150**	Mylar Capacitor	0.0150 50V J				01
	C118	**UA954100**	Mylar Capacitor	0.0100 50V J				01
	C119	**UA954120**	Mylar Capacitor	0.0120 50V J				
	C120	**UA953390**	Mylar Capacitor	3900P 50V J				01
	C121	**UA954150**	Mylar Capacitor	0.0150 50V J				01
	C122	**UA953390**	Mylar Capacitor	3900P 50V J				01
*	C123	**UX061270**	Ceramic Capacitor (Chip)	27P 50V J				
	C124	**UX062100**	Ceramic Capacitor (Chip)	100P 50V J				01
*	C125	**UX061270**	Ceramic Capacitor (Chip)	27P 50V J				
	C126	**UX062100**	Ceramic Capacitor (Chip)	100P 50V J				01
	C127	**UR847470**	Electrolytic Cap.	47.00 25.0V				01
	C128	**UR847470**	Electrolytic Cap.	47.00 25.0V				01
	C130	**UR866470**	Electrolytic Cap.	4.70 50.0V				01
	C131	**UX063100**	Ceramic Capacitor (Chip)	1000P 50V K				01
	C132	**UR847100**	Electrolytic Cap.	10.00 25.0V				01
	C133	**UR847100**	Electrolytic Cap.	10.00 25.0V				01
	C134	**UX062100**	Ceramic Capacitor (Chip)	100P 50V J				01
	-137	**UX062100**	Ceramic Capacitor (Chip)	100P 50V J				01
	C138	**UX061470**	Ceramic Capacitor (Chip)	47P 50V J				
	C139	**UX061470**	Ceramic Capacitor (Chip)	47P 50V J				
	C140	**UR847470**	Electrolytic Cap.	47.00 25.0V				01
	C141	**UR847470**	Electrolytic Cap.	47.00 25.0V				01
	C142	**UX064100**	Ceramic Capacitor (Chip)	0.0100 50V K				01
	-151	**UX064100**	Ceramic Capacitor (Chip)	0.0100 50V K				01
	C201	**UR847100**	Electrolytic Cap.	10.00 25.0V				01
	C202	**UR847100**	Electrolytic Cap.	10.00 25.0V				01

✻: New Parts

RANK: Japan only

	REF NO.	PART NO.	DESCRIPTION			REMARKS	QTY	RANK
*	C203	**UX062330**	Ceramic Capacitor (Chip)	330P 50V J				
*	C204	**UX062330**	Ceramic Capacitor (Chip)	330P 50V J				
	C205	**UX062100**	Ceramic Capacitor (Chip)	100P 50V J				01
	C206	**UX062100**	Ceramic Capacitor (Chip)	100P 50V J				01
	C207	**UR828470**	Electrolytic Cap.	470.00 10.0V				01
	C208	**UR828470**	Electrolytic Cap.	470.00 10.0V				01
*	C209	**UX062330**	Ceramic Capacitor (Chip)	330P 50V J				
*	C210	**UX062330**	Ceramic Capacitor (Chip)	330P 50V J				
	C211	**UX061470**	Ceramic Capacitor (Chip)	47P 50V J				
	C212	**UX061470**	Ceramic Capacitor (Chip)	47P 50V J				
	C213	**UR847100**	Electrolytic Cap.	10.00 25.0V				01
	C214	**UR847100**	Electrolytic Cap.	10.00 25.0V				01
	C215	**UA954100**	Mylar Capacitor	0.0100 50V J				01
	C216	**UA954120**	Mylar Capacitor	0.0120 50V J				
	C217	**UA954150**	Mylar Capacitor	0.0150 50V J				01
	C218	**UA954100**	Mylar Capacitor	0.0100 50V J				01
	C219	**UA954120**	Mylar Capacitor	0.0120 50V J				
	C220	**UA953390**	Mylar Capacitor	3900P 50V J				01
	C221	**UA954150**	Mylar Capacitor	0.0150 50V J				01
	C222	**UA953390**	Mylar Capacitor	3900P 50V J				01
*	C223	**UX061270**	Ceramic Capacitor (Chip)	27P 50V J				
	C224	**UX062100**	Ceramic Capacitor (Chip)	100P 50V J				01
*	C225	**UX061270**	Ceramic Capacitor (Chip)	27P 50V J				
	C226	**UX062100**	Ceramic Capacitor (Chip)	100P 50V J				01
	C227	**UR847470**	Electrolytic Cap.	47.00 25.0V				01
	C228	**UR847470**	Electrolytic Cap.	47.00 25.0V				01
	C230	**UR866470**	Electrolytic Cap.	4.70 50.0V				01
	C231	**UX063100**	Ceramic Capacitor (Chip)	1000P 50V K				01
	C232	**UR847100**	Electrolytic Cap.	10.00 25.0V				01
	C233	**UR847100**	Electrolytic Cap.	10.00 25.0V				01
	C234	**UX062100**	Ceramic Capacitor (Chip)	100P 50V J				01
	-237	**UX062100**	Ceramic Capacitor (Chip)	100P 50V J				01
	C238	**UX061470**	Ceramic Capacitor (Chip)	47P 50V J				
	C239	**UX061470**	Ceramic Capacitor (Chip)	47P 50V J				
	C240	**UR847470**	Electrolytic Cap.	47.00 25.0V				01
	C241	**UR847470**	Electrolytic Cap.	47.00 25.0V				01
	C242	**UX064100**	Ceramic Capacitor (Chip)	0.0100 50V K				01
	-249	**UX064100**	Ceramic Capacitor (Chip)	0.0100 50V K				01
	C301	**UX064100**	Ceramic Capacitor (Chip)	0.0100 50V K				01
	C302	**UR866220**	Electrolytic Cap.	2.20 50.0V				01
	C303	**UR866330**	Electrolytic Cap.	3.30 50.0V				01
	C304	**UX064100**	Ceramic Capacitor (Chip)	0.0100 50V K				01
	-306	**UX064100**	Ceramic Capacitor (Chip)	0.0100 50V K				01
	C307	**UR867470**	Electrolytic Cap.	47.00 50.0V				01
	C308	**UX064100**	Ceramic Capacitor (Chip)	0.0100 50V K				01
	C309	**UR867470**	Electrolytic Cap.	47.00 50.0V				01
	-311	**UR867470**	Electrolytic Cap.	47.00 50.0V				01
	C312	**UX064100**	Ceramic Capacitor (Chip)	0.0100 50V K				01
	C313	**UR867470**	Electrolytic Cap.	47.00 50.0V				01
	C314	**UR867470**	Electrolytic Cap.	47.00 50.0V				01
	C317	**UX062220**	Ceramic Capacitor (Chip)	220P 50V J				01
	-322	**UX062220**	Ceramic Capacitor (Chip)	220P 50V J				01
	C323	**UX064100**	Ceramic Capacitor (Chip)	0.0100 50V K				01
	C324	**UX061470**	Ceramic Capacitor (Chip)	47P 50V J				
	C325	**UX061470**	Ceramic Capacitor (Chip)	47P 50V J				
	C326	**UX061220**	Ceramic Capacitor (Chip)	22P 50V J				01
	-329	**UX061220**	Ceramic Capacitor (Chip)	22P 50V J				01
	C330	**UX064100**	Ceramic Capacitor (Chip)	0.0100 50V K				01
	C331	**UX064100**	Ceramic Capacitor (Chip)	0.0100 50V K				01
	C332	**UX062220**	Ceramic Capacitor (Chip)	220P 50V J				01
	-337	**UX062220**	Ceramic Capacitor (Chip)	220P 50V J				01
	C338	**UX061470**	Ceramic Capacitor (Chip)	47P 50V J				
	C339	**UX064100**	Ceramic Capacitor (Chip)	0.0100 50V K				01
	C340	**UX061470**	Ceramic Capacitor (Chip)	47P 50V J				
	C341	**UX061220**	Ceramic Capacitor (Chip)	22P 50V J				01
	C342	**UX061220**	Ceramic Capacitor (Chip)	22P 50V J				01
	C343	**UX061680**	Ceramic Capacitor (Chip)	68P 50V J				01
	C344	**UX061680**	Ceramic Capacitor (Chip)	68P 50V J				01
	C345	**UX064100**	Ceramic Capacitor (Chip)	0.0100 50V K				01
	-351	**UX064100**	Ceramic Capacitor (Chip)	0.0100 50V K				01

❇: New Parts

RANK: Japan only

	REF NO.	PART NO.	DESCRIPTION			REMARKS	QTY	RANK
	C352	**UX062220**	Ceramic Capacitor (Chip)	220P 50V J				01
	-357	**UX062220**	Ceramic Capacitor (Chip)	220P 50V J				01
	C358	**UX064100**	Ceramic Capacitor (Chip)	0.0100 50V K				01
	C359	**UX061220**	Ceramic Capacitor (Chip)	22P 50V J				01
	-364	**UX061220**	Ceramic Capacitor (Chip)	22P 50V J				01
	C365	**UX064100**	Ceramic Capacitor (Chip)	0.0100 50V K				01
	C366	**UX064100**	Ceramic Capacitor (Chip)	0.0100 50V K				01
	C367	**UX062100**	Ceramic Capacitor (Chip)	100P 50V J				01
	C368	**UX062100**	Ceramic Capacitor (Chip)	100P 50V J				01
	C369	**UX064100**	Ceramic Capacitor (Chip)	0.0100 50V K				01
	C370	**UX061680**	Ceramic Capacitor (Chip)	68P 50V J				01
	C371	**UX061680**	Ceramic Capacitor (Chip)	68P 50V J				01
	C372	**UX064100**	Ceramic Capacitor (Chip)	0.0100 50V K				01
	C373	**UR847470**	Electrolytic Cap.	47.00 25.0V				01
	C374	**UR847470**	Electrolytic Cap.	47.00 25.0V				01
	C375	**UR847100**	Electrolytic Cap.	10.00 25.0V				01
	-378	**UR847100**	Electrolytic Cap.	10.00 25.0V				01
	C379	**UX064100**	Ceramic Capacitor (Chip)	0.0100 50V K				01
	C380	**UR847100**	Electrolytic Cap.	10.00 25.0V				01
	C381	**UR847100**	Electrolytic Cap.	10.00 25.0V				01
	C382	**UX064100**	Ceramic Capacitor (Chip)	0.0100 50V K				01
	-385	**UX064100**	Ceramic Capacitor (Chip)	0.0100 50V K				01
*	C386	**VV064600**	Monolithic Mylar Capacitor	1.5 50V J				
	C387	**UA655820**	Mylar Capacitor	0.8200 50V J				01
	C388	**UA655470**	Mylar Capacitor	0.4700 50V J				01
	C389	**UA655220**	Mylar Capacitor	0.2200 50V J				01
	C390	**V5868900**	Mylar Capacitor	0.1 50V J				
	C391	**UA954470**	Mylar Capacitor	0.0470 50V J				01
	C392	**UA954270**	Mylar Capacitor	0.0270 50V J				01
	C393	**UA954120**	Mylar Capacitor	0.0120 50V J				
	C394	**UA953680**	Mylar Capacitor	6800P 50V J				01
*	C395	**VV064600**	Monolithic Mylar Capacitor	1.5 50V J				
	C396	**UA655820**	Mylar Capacitor	0.8200 50V J				01
	C397	**UA655470**	Mylar Capacitor	0.4700 50V J				01
	C398	**UA655220**	Mylar Capacitor	0.2200 50V J				01
	C399	**V5868900**	Mylar Capacitor	0.1 50V J				
	C400	**UA954470**	Mylar Capacitor	0.0470 50V J				01
	C401	**UA954270**	Mylar Capacitor	0.0270 50V J				01
	C402	**UA954120**	Mylar Capacitor	0.0120 50V J				
	C403	**UA953680**	Mylar Capacitor	6800P 50V J				01
	C404	**UX064100**	Ceramic Capacitor (Chip)	0.0100 50V K				01
	C405	**UA655150**	Mylar Capacitor	0.1500 50V J				01
	C406	**UA954820**	Mylar Capacitor	0.0820 50V J				01
	C407	**UA954390**	Mylar Capacitor	0.0390 50V J				01
	C408	**UA954180**	Mylar Capacitor	0.0180 50V J				01
	C409	**UA954100**	Mylar Capacitor	0.0100 50V J				01
	C410	**UA953470**	Mylar Capacitor	4700P 50V J				01
	C411	**UA953220**	Mylar Capacitor	2200P 50V J				01
	C412	**UA953120**	Mylar Capacitor	1200P 50V J				01
*	C413	**V8507200**	Mylar Capacitor	680P 50V J				
	C414	**UA655150**	Mylar Capacitor	0.1500 50V J				01
	C415	**UA954820**	Mylar Capacitor	0.0820 50V J				01
	C416	**UA954390**	Mylar Capacitor	0.0390 50V J				01
	C417	**UA954180**	Mylar Capacitor	0.0180 50V J				01
	C418	**UA954100**	Mylar Capacitor	0.0100 50V J				01
	C419	**UA953470**	Mylar Capacitor	4700P 50V J				01
	C420	**UA953220**	Mylar Capacitor	2200P 50V J				01
	C421	**UA953120**	Mylar Capacitor	1200P 50V J				01
*	C422	**V8507200**	Mylar Capacitor	680P 50V J				
	C423	**UX064100**	Ceramic Capacitor (Chip)	0.0100 50V K				01
	-428	**UX064100**	Ceramic Capacitor (Chip)	0.0100 50V K				01
	C429	**UX062470**	Ceramic Capacitor (Chip)	470P 50V J				
	C430	**UX062470**	Ceramic Capacitor (Chip)	470P 50V J				
	C431	**UX064100**	Ceramic Capacitor (Chip)	0.0100 50V K				01
	C432	**UR847470**	Electrolytic Cap.	47.00 25.0V				01
	C433	**UR847470**	Electrolytic Cap.	47.00 25.0V				01
	C434	**UX064100**	Ceramic Capacitor (Chip)	0.0100 50V K				01
	-438	**UX064100**	Ceramic Capacitor (Chip)	0.0100 50V K				01
	C439	**UX063100**	Ceramic Capacitor (Chip)	1000P 50V K				01
	-441	**UX063100**	Ceramic Capacitor (Chip)	1000P 50V K				01

*: New Parts

RANK: Japan only

REF NO.	PART NO.	DESCRIPTION			REMARKS	QTY	RANK
C442	**UR847100**	Electrolytic Cap.	10.00 25.0V				01
-446	**UR847100**	Electrolytic Cap.	10.00 25.0V				01
C447	**UX062100**	Ceramic Capacitor (Chip)	100P 50V J				01
-450	**UX062100**	Ceramic Capacitor (Chip)	100P 50V J				01
C451	**UR847100**	Electrolytic Cap.	10.00 25.0V				01
-453	**UR847100**	Electrolytic Cap.	10.00 25.0V				01
C454	**UX062100**	Ceramic Capacitor (Chip)	100P 50V J				01
-463	**UX062100**	Ceramic Capacitor (Chip)	100P 50V J				01
C464	**UX061680**	Ceramic Capacitor (Chip)	68P 50V J				01
-467	**UX061680**	Ceramic Capacitor (Chip)	68P 50V J				01
C468	**UX061470**	Ceramic Capacitor (Chip)	47P 50V J				
C469	**UX061100**	Ceramic Capacitor (Chip)	10P 50V D				01
C472	**UX061220**	Ceramic Capacitor (Chip)	22P 50V J				01
C473	**UX061220**	Ceramic Capacitor (Chip)	22P 50V J				01
C474	**UR848100**	Electrolytic Cap.	100.00 25.0V				01
-477	**UR848100**	Electrolytic Cap.	100.00 25.0V				01
C478	**UR847100**	Electrolytic Cap.	10.00 25.0V				01
C479	**UR848100**	Electrolytic Cap.	100.00 25.0V				01
-483	**UR848100**	Electrolytic Cap.	100.00 25.0V				01
C484	**UA655270**	Mylar Capacitor	0.2700 50V J				01
C485	**UA954820**	Mylar Capacitor	0.0820 50V J				01
C486	**UR847100**	Electrolytic Cap.	10.00 25.0V				01
C501	**UR847100**	Electrolytic Cap.	10.00 25.0V				01
-506	**UR847100**	Electrolytic Cap.	10.00 25.0V				01
C507	**UX062100**	Ceramic Capacitor (Chip)	100P 50V J				01
-518	**UX062100**	Ceramic Capacitor (Chip)	100P 50V J				01
C519	**UX061680**	Ceramic Capacitor (Chip)	68P 50V J				01
C520	**UX061680**	Ceramic Capacitor (Chip)	68P 50V J				01
C521	**UR847470**	Electrolytic Cap.	47.00 25.0V				01
-524	**UR847470**	Electrolytic Cap.	47.00 25.0V				01
C525	**UR847100**	Electrolytic Cap.	10.00 25.0V				01
C526	**UR847100**	Electrolytic Cap.	10.00 25.0V				01
C527	**UX064100**	Ceramic Capacitor (Chip)	0.0100 50V K				01
C528	**UX064100**	Ceramic Capacitor (Chip)	0.0100 50V K				01
C529	**UX062220**	Ceramic Capacitor (Chip)	220P 50V J				01
C530	**UX062220**	Ceramic Capacitor (Chip)	220P 50V J				01
C531	**UX064100**	Ceramic Capacitor (Chip)	0.0100 50V K				01
C532	**UX061220**	Ceramic Capacitor (Chip)	22P 50V J				01
C533	**UX061220**	Ceramic Capacitor (Chip)	22P 50V J				01
C534	**UX063100**	Ceramic Capacitor (Chip)	1000P 50V K				01
C535	**UX064100**	Ceramic Capacitor (Chip)	0.0100 50V K				01
C536	**UR847100**	Electrolytic Cap.	10.00 25.0V				01
C537	**UR847100**	Electrolytic Cap.	10.00 25.0V				01
C538	**UX064100**	Ceramic Capacitor (Chip)	0.0100 50V K				01
C539	**UX064100**	Ceramic Capacitor (Chip)	0.0100 50V K				01
C540	**UR847100**	Electrolytic Cap.	10.00 25.0V				01
C541	**UR847100**	Electrolytic Cap.	10.00 25.0V				01
C542	**UX064100**	Ceramic Capacitor (Chip)	0.0100 50V K				01
C543	**UX064100**	Ceramic Capacitor (Chip)	0.0100 50V K				01
C544	**UX061100**	Ceramic Capacitor (Chip)	10P 50V D				01
C545	**UX061100**	Ceramic Capacitor (Chip)	10P 50V D				01
C546	**UX064100**	Ceramic Capacitor (Chip)	0.0100 50V K				01
C547	**UR848100**	Electrolytic Cap.	100.00 25.0V				01
C548	**UR848100**	Electrolytic Cap.	100.00 25.0V				01
C549	**UX064100**	Ceramic Capacitor (Chip)	0.0100 50V K				01
C550	**UX063100**	Ceramic Capacitor (Chip)	1000P 50V K				01
C551	**UX063100**	Ceramic Capacitor (Chip)	1000P 50V K				01
C552	**UR838100**	Electrolytic Cap.	100.00 16.0V				01
C553	**UR838100**	Electrolytic Cap.	100.00 16.0V				01
C601	**UR866470**	Electrolytic Cap.	4.70 50.0V				01
C602	**UA954470**	Mylar Capacitor	0.0470 50V J				01
C603	**UR866470**	Electrolytic Cap.	4.70 50.0V				01
C604	**UR866100**	Electrolytic Cap.	1.00 50.0V				01
C605	**UX064100**	Ceramic Capacitor (Chip)	0.0100 50V K				01
C606	**UX064100**	Ceramic Capacitor (Chip)	0.0100 50V K				01
C607	**UX062100**	Ceramic Capacitor (Chip)	100P 50V J				01
C608	**UX064100**	Ceramic Capacitor (Chip)	0.0100 50V K				01
C609	**UR866470**	Electrolytic Cap.	4.70 50.0V				01
C610	**UX061470**	Ceramic Capacitor (Chip)	47P 50V J				
C611	**UX064100**	Ceramic Capacitor (Chip)	0.0100 50V K				01

❇: New Parts

RANK: Japan only

REF NO.	PART NO.	DESCRIPTION			REMARKS	QTY	RANK
C612	**UR847100**	Electrolytic Cap.	10.00 25.0V				01
C613	**UX064100**	Ceramic Capacitor (Chip)	0.0100 50V K				01
-616	**UX064100**	Ceramic Capacitor (Chip)	0.0100 50V K				01
C617	**UA655120**	Mylar Capacitor	0.1200 50V J				01
C618	**UA655120**	Mylar Capacitor	0.1200 50V J				01
C619	**UR866470**	Electrolytic Cap.	4.70 50.0V				01
C620	**UA655120**	Mylar Capacitor	0.1200 50V J				01
C621	**UA655120**	Mylar Capacitor	0.1200 50V J				01
C622	**UA954470**	Mylar Capacitor	0.0470 50V J				01
C623	**UR866470**	Electrolytic Cap.	4.70 50.0V				01
C624	**UR866100**	Electrolytic Cap.	1.00 50.0V				01
C625	**UR866470**	Electrolytic Cap.	4.70 50.0V				01
C626	**UR828470**	Electrolytic Cap.	470.00 10.0V				01
C627	**UR828470**	Electrolytic Cap.	470.00 10.0V				01
C628	**UX062100**	Ceramic Capacitor (Chip)	100P 50V J				01
C629	**UX064100**	Ceramic Capacitor (Chip)	0.0100 50V K				01
C630	**UX062100**	Ceramic Capacitor (Chip)	100P 50V J				01
C631	**UX064100**	Ceramic Capacitor (Chip)	0.0100 50V K				01
C632	**UX062220**	Ceramic Capacitor (Chip)	220P 50V J				01
C633	**UX062220**	Ceramic Capacitor (Chip)	220P 50V J				01
C634	**UX063100**	Ceramic Capacitor (Chip)	1000P 50V K				01
C635	**UX063100**	Ceramic Capacitor (Chip)	1000P 50V K				01
C636	**UX062470**	Ceramic Capacitor (Chip)	470P 50V J				
C637	**UX062470**	Ceramic Capacitor (Chip)	470P 50V J				
C638	**UR847100**	Electrolytic Cap.	10.00 25.0V				01
C639	**UR847100**	Electrolytic Cap.	10.00 25.0V				01
C640	**UR866100**	Electrolytic Cap.	1.00 50.0V				01
C641	**UR866100**	Electrolytic Cap.	1.00 50.0V				01
C642	**UX064100**	Ceramic Capacitor (Chip)	0.0100 50V K				01
C643	**UR847470**	Electrolytic Cap.	47.00 25.0V				01
C644	**UR847470**	Electrolytic Cap.	47.00 25.0V				01
C701	**UR847100**	Electrolytic Cap.	10.00 25.0V				01
-704	**UR847100**	Electrolytic Cap.	10.00 25.0V				01
C705	**UX062100**	Ceramic Capacitor (Chip)	100P 50V J				01
-708	**UX062100**	Ceramic Capacitor (Chip)	100P 50V J				01
C709	**UX061100**	Ceramic Capacitor (Chip)	10P 50V D				01
-712	**UX061100**	Ceramic Capacitor (Chip)	10P 50V D				01
C713	**UX064100**	Ceramic Capacitor (Chip)	0.0100 50V K				01
-716	**UX064100**	Ceramic Capacitor (Chip)	0.0100 50V K				01
CN501	**VQ048400**	Connector, FFC	52045 35P TE				01
CN601	**VV067500**	Connector Base Post	M2426XX 15P TE				01
CN602	**VV066200**	Connector Base Post	M2426XX 2P TE				01
CN603	**V2156500**	FMN Connector	FMN 12P TE				03
CN604	**V2156500**	FMN Connector	FMN 12P TE				03
D101	**VT332900**	Diode	1SS355 TE-17				01
-104	**VT332900**	Diode	1SS355 TE-17				01
D201	**VT332900**	Diode	1SS355 TE-17				01
-204	**VT332900**	Diode	1SS355 TE-17				01
D301	**VT332900**	Diode	1SS355 TE-17				01
D302	**VT332900**	Diode	1SS355 TE-17				01
D601	**VT332900**	Diode	1SS355 TE-17				01
D602	**VT332900**	Diode	1SS355 TE-17				01
EC501	**VZ303900**	Rotary Encoder	SDB161PVB		PROGRAM EFFECT2		06
EC502	**VZ303900**	Rotary Encoder	SDB161PVB		PROGRAM EFFECT1		06
EM501	**VV056900**	Noise Filter	ZJSR5101-223TA				01
-504	**VV056900**	Noise Filter	ZJSR5101-223TA				01
IC101	**XJ553A00**	IC	NJM2068MD-T1		OP AMP		02
-104	**XJ553A00**	IC	NJM2068MD-T1		OP AMP		02
IC105	**IG103520**	IC	NJM4558M(T1)		OP AMP		03
IC201	**XJ553A00**	IC	NJM2068MD-T1		OP AMP		02
-204	**XJ553A00**	IC	NJM2068MD-T1		OP AMP		02
IC301	**XJ553A00**	IC	NJM2068MD-T1		OP AMP		02
-303	**XJ553A00**	IC	NJM2068MD-T1		OP AMP		02
IC305	**XJ553A00**	IC	NJM2068MD-T1		OP AMP		02
-310	**XJ553A00**	IC	NJM2068MD-T1		OP AMP		02
IC311	**XM560A00**	IC	NJM2060M(TE2)OP		OP AMP		02
-315	**XM560A00**	IC	NJM2060M(TE2)OP		OP AMP		02
IC316	**XT157A00**	IC	NJM4580ED		OP AMP		02
IC317	**XT157A00**	IC	NJM4580ED		OP AMP		02
IC318	**XJ553A00**	IC	NJM2068MD-T1		OP AMP		02

✻: New Parts

RANK: Japan only

	REF NO.	PART NO.	DESCRIPTION			REMARKS	QTY	RANK
	IC319	**XT157A00**	IC	NJM4580ED		OP AMP		02
	-321	**XT157A00**	IC	NJM4580ED		OP AMP		02
	IC501	**XJ553A00**	IC	NJM2068MD-T1		OP AMP		02
	-504	**XJ553A00**	IC	NJM2068MD-T1		OP AMP		02
	IC505	**XP844A00**	IC	NJM4556AL		OP AMP		02
	IC601	**XT547A00**	IC	LB1412M		LED DRIVER		04
	IC602	**XT547A00**	IC	LB1412M		LED DRIVER		04
	IC603	**XJ553A00**	IC	NJM2068MD-T1		OP AMP		02
	IC604	**XJ553A00**	IC	NJM2068MD-T1		OP AMP		02
	IC605	**IG103520**	IC	NJM4558M(T1)		OP AMP		03
	IC606	**IG103520**	IC	NJM4558M(T1)		OP AMP		03
	IC701	**XJ553A00**	IC	NJM2068MD-T1		OP AMP		02
	IC702	**XJ553A00**	IC	NJM2068MD-T1		OP AMP		02
	JK101	**V2886000**	Phone Jack	JY-6351J-06-340		CH17L		02
	JK102	**V2886000**	Phone Jack	JY-6351J-06-340		CH18R		02
	JK103	**V4807700**	Pin Jack	RJ-1130A-09-0320A		LINE 17L/18R/19L/20R		03
	JK201	**V2886000**	Phone Jack	JY-6351J-06-340		CH19L		02
	JK202	**V2886000**	Phone Jack	JY-6351J-06-340		CH20R		02
	JK301	**V2886000**	Phone Jack	JY-6351J-06-340		ST SUB OUT L		02
	JK302	**V2886000**	Phone Jack	JY-6351J-06-340		ST SUB OUT R		02
	JK303	**V2886000**	Phone Jack	JY-6351J-06-340		ST OUT L		02
	JK304	**V2886000**	Phone Jack	JY-6351J-06-340		ST OUT R		02
	JK305	**V2886000**	Phone Jack	JY-6351J-06-340		MONO OUT		02
	JK306	**V2886000**	Phone Jack	JY-6351J-06-340		AUX SEND1		02
	JK307	**V2886000**	Phone Jack	JY-6351J-06-340		AUX SEND2		02
	JK308	**V2886000**	Phone Jack	JY-6351J-06-340		EFFECT SEND1		02
	JK309	**V2886000**	Phone Jack	JY-6351J-06-340		EFFECT SEND2		02
	JK501	**V2886000**	Phone Jack	JY-6351J-06-340		ST SUB IN1 L		02
	JK502	**V2886000**	Phone Jack	JY-6351J-06-340		ST SUB IN1 R		02
	JK503	**V2886000**	Phone Jack	JY-6351J-06-340		ST SUB IN2 L		02
	JK504	**V2886000**	Phone Jack	JY-6351J-06-340		ST SUB IN2 R		02
	JK505	**V4807700**	Pin Jack	RJ-1130A-09-0320A		2TR IN/REC OUT		03
	JK506	**V2886000**	Phone Jack	JY-6351J-06-340		EFFECT ON/OFF		02
	JK507	**V2886000**	Phone Jack	JY-6351J-06-340		TAP		02
	JK508	**V2886000**	Phone Jack	JY-6351J-06-340		PHONES		02
	JK601	**V2886000**	Phone Jack	JY-6351J-06-340		P.AMP IN A		02
	JK602	**V2886000**	Phone Jack	JY-6351J-06-340		P.AMP IN B		02
	JK603	**V6127200**	XLM Connector	JACK JY-5042		LAMP		03
*	LD101	**V8840100**	LED	L34HD-TNB5/13.6 RE		PEAK(CH17/18)		01
*	LD102	**V8840200**	LED	L34GD-TNB5/13.6 GR		SIGNAL(CH17/18)		01
*	LD103	**V8840400**	LED	L34YD-TNB5/13.6 YE		CH ON(CH17/18)		01
*	LD201	**V8840100**	LED	L34HD-TNB5/13.6 RE		PEAK(CH19/20)		01
*	LD202	**V8840200**	LED	L34GD-TNB5/13.6 GR		SIGNAL(CH19/20)		01
*	LD203	**V8840400**	LED	L34YD-TNB5/13.6 YE		CH ON(CH19/20)		01
*	LD301	**V8840100**	LED	L34HD-TNB5/13.6 RE		STAND-BY		01
*	LD302	**V8840400**	LED	L34YD-TNB5/13.6 YE		ST GRAPHIC EQUALIZER		01
*	LD501	**V8840400**	LED	L34YD-TNB5/13.6 YE		EFFECT1 ON/OFF		01
*	LD502	**V8840200**	LED	L34GD-TNB5/13.6 GR		TAP		01
*	LD503	**V8840400**	LED	L34YD-TNB5/13.6 YE		EFFECT2 ON/OFF		01
*	LD601	**V8840600**	LED	L513HDTTNB5/5.5 RE		PEAK L		
*	LD602	**V8840900**	LED	L513YDTTNB5/5.5 YE		ST L(+8,+5,+3,+1,0)		
*	-606	**V8840900**	LED	L513YDTTNB5/5.5 YE				
*	LD607	**V8840700**	LED	L513GDTTNB5/5.5 GR		ST L(-1,-3,-5,-7,-10,-15,		
*	-613	**V8840700**	LED	L513GDTTNB5/5.5 GR		-20)		
*	LD614	**V8840400**	LED	L34YD-TNB5/13.6 YE		YAMAHA SPEAKER PROCESSING		01
*	LD615	**V8840600**	LED	L513HDTTNB5/5.5 RE		PEAK R		
*	LD616	**V8840900**	LED	L513YDTTNB5/5.5 YE		ST R(+8,+5,+3,+1,0)		
*	-620	**V8840900**	LED	L513YDTTNB5/5.5 YE				
*	LD621	**V8840700**	LED	L513GDTTNB5/5.5 GR		ST R(-1,-3,-5,-7,-10,-15,		
*	-627	**V8840700**	LED	L513GDTTNB5/5.5 GR		-20)		
*	LD628	**V8840100**	LED	L34HD-TNB5/13.6 RE		LIMITER A		01
*	LD629	**V8840100**	LED	L34HD-TNB5/13.6 RE		LIMITER B		01
*	LD630	**V8840200**	LED	L34GD-TNB5/13.6 GR		POWER		01
*	Q101	**V7421800**	Transistor	2SA2SA1312 GR,BL				01
	Q102	**VV556400**	Transistor	2SC2412K Q,R,S				01
*	Q201	**V7421800**	Transistor	2SA2SA1312 GR,BL				01
	Q202	**VV556400**	Transistor	2SC2412K Q,R,S				01
*	Q301	**V7421800**	Transistor	2SA2SA1312 GR,BL				01
*	Q302	**V7421800**	Transistor	2SA2SA1312 GR,BL				01
*	Q303	**V7421700**	Transistor (chip)	2SC2SC3324 GR,BL				01

✻: New Parts

RANK: Japan only

	REF NO.	PART NO.	DESCRIPTION			REMARKS	QTY	RANK
*	-308	**V7421700**	Transistor (chip)	2SC2SC3324 GR,BL				01
	Q501	**VV655400**	Digital Transistor	DTC114EKA TP				01
	-503	**VV655400**	Digital Transistor	DTC114EKA TP				01
	Q601	**VV556400**	Transistor	2SC2412K Q,R,S				01
*	Q602	**V7421800**	Transistor	2SA2SA1312 GR,BL				01
	Q603	**VV556400**	Transistor	2SC2412K Q,R,S				01
*	Q604	**V7421800**	Transistor	2SA2SA1312 GR,BL				01
*	-607	**V7421800**	Transistor	2SA2SA1312 GR,BL				01
	Q608	**VV556400**	Transistor	2SC2412K Q,R,S				01
*	Q609	**V7421800**	Transistor	2SA2SA1312 GR,BL				01
	Q610	**VV556400**	Transistor	2SC2412K Q,R,S				01
	-612	**VV556400**	Transistor	2SC2412K Q,R,S				01
	Q613	**VV655400**	Digital Transistor	DTC114EKA TP				01
	-616	**VV655400**	Digital Transistor	DTC114EKA TP				01
	Q617	**VV556400**	Transistor	2SC2412K Q,R,S				01
	Q618	**VV556400**	Transistor	2SC2412K Q,R,S				01
	Q619	**VV655000**	Digital Transistor	DTA114EKA TP				01
	Q620	**VV655000**	Digital Transistor	DTA114EKA TP				01
	R101	**RG008100**	Carbon Resistor (chip)	100K 0.1 J				
	R102	**RG008100**	Carbon Resistor (chip)	100K 0.1 J				
	R103	**RG007100**	Carbon Resistor (chip)	10K 0.1 J				
	R104	**RG007100**	Carbon Resistor (chip)	10K 0.1 J				
	R105	**RG006470**	Carbon Resistor (chip)	4.7K 0.1 J				
	R106	**RG006470**	Carbon Resistor (chip)	4.7K 0.1 J				
	R107	**RG005220**	Carbon Resistor (chip)	220 0.1 J				
	R108	**RG005220**	Carbon Resistor (chip)	220 0.1 J				
*	R109	**RG005120**	Carbon Resistor (chip)	120 0.1 J				
*	R110	**RG005120**	Carbon Resistor (chip)	120 0.1 J				
*	R111	**RG007200**	Carbon Resistor (chip)	20K 0.1 J				
*	R112	**RG007200**	Carbon Resistor (chip)	20K 0.1 J				
	R113	**RG007100**	Carbon Resistor (chip)	10K 0.1 J				
	R114	**RG005680**	Carbon Resistor (chip)	680 0.1 J				
	R115	**RG006270**	Carbon Resistor (chip)	2.7K 0.1 J				
	R116	**RG007100**	Carbon Resistor (chip)	10K 0.1 J				
	R117	**RG005680**	Carbon Resistor (chip)	680 0.1 J				
	R118	**RG006270**	Carbon Resistor (chip)	2.7K 0.1 J				
	R119	**RG007100**	Carbon Resistor (chip)	10K 0.1 J				
	R120	**RG007100**	Carbon Resistor (chip)	10K 0.1 J				
	R121	**RG006270**	Carbon Resistor (chip)	2.7K 0.1 J				
	R122	**RG007100**	Carbon Resistor (chip)	10K 0.1 J				
	R123	**RG005680**	Carbon Resistor (chip)	680 0.1 J				
	R124	**RG006270**	Carbon Resistor (chip)	2.7K 0.1 J				
	R125	**RG006270**	Carbon Resistor (chip)	2.7K 0.1 J				
	R126	**RG007100**	Carbon Resistor (chip)	10K 0.1 J				
	R127	**RG005680**	Carbon Resistor (chip)	680 0.1 J				
	R128	**RG006270**	Carbon Resistor (chip)	2.7K 0.1 J				
	R129	**RG004100**	Carbon Resistor (chip)	10 0.1 J				
	R130	**RG004100**	Carbon Resistor (chip)	10 0.1 J				
	R131	**RG007560**	Carbon Resistor (chip)	56K 0.1 J				
	R132	**RG007330**	Carbon Resistor (chip)	33K 0.1 J				
	R133	**RG008220**	Carbon Resistor (chip)	220K 0.1 J				
	R134	**RG005220**	Carbon Resistor (chip)	220 0.1 J				
	R135	**RG007120**	Carbon Resistor (chip)	12K 0.1 J				
	R136	**RG006330**	Carbon Resistor (chip)	3.3K 0.1 J				
	R137	**RG007330**	Carbon Resistor (chip)	33K 0.1 J				
	R138	**RG008100**	Carbon Resistor (chip)	100K 0.1 J				
*	R139	**RG206220**	Carbon Resistor (chip)	2.2K 1/4 J				
*	R140	**RG206270**	Carbon Resistor (chip)	2.7K 1/4 J				
	R141	**RG005220**	Carbon Resistor (chip)	220 0.1 J				
	R142	**RG005220**	Carbon Resistor (chip)	220 0.1 J				
	R143	**RG007180**	Carbon Resistor (chip)	18K 0.1 J				
	R144	**RG007180**	Carbon Resistor (chip)	18K 0.1 J				
	R145	**RG005220**	Carbon Resistor (chip)	220 0.1 J				
	R146	**RG005220**	Carbon Resistor (chip)	220 0.1 J				
	R147	**RG006470**	Carbon Resistor (chip)	4.7K 0.1 J				
	R148	**RG006470**	Carbon Resistor (chip)	4.7K 0.1 J				
	R149	**RG007100**	Carbon Resistor (chip)	10K 0.1 J				
	R150	**RG007100**	Carbon Resistor (chip)	10K 0.1 J				
	R151	**RG004100**	Carbon Resistor (chip)	10 0.1 J				
	R152	**RG004100**	Carbon Resistor (chip)	10 0.1 J				

✻: New Parts

RANK: Japan only

	REF NO.	PART NO.	DESCRIPTION			REMARKS	QTY	RANK
	R153	**RG008220**	Carbon Resistor (chip)	220K 0.1 J				
	R154	**RG008220**	Carbon Resistor (chip)	220K 0.1 J				
	R155	**RG007180**	Carbon Resistor (chip)	18K 0.1 J				
	R156	**RG007180**	Carbon Resistor (chip)	18K 0.1 J				
	R157	**RG007270**	Carbon Resistor (chip)	27K 0.1 J				
	-164	**RG007270**	Carbon Resistor (chip)	27K 0.1 J				
*	R165	**RG007360**	Carbon Resistor (chip)	36K 0.1 J				
*	R166	**RG007360**	Carbon Resistor (chip)	36K 0.1 J				
	R201	**RG008100**	Carbon Resistor (chip)	100K 0.1 J				
	R202	**RG008100**	Carbon Resistor (chip)	100K 0.1 J				
	R203	**RG007100**	Carbon Resistor (chip)	10K 0.1 J				
	R204	**RG007100**	Carbon Resistor (chip)	10K 0.1 J				
	R205	**RG006470**	Carbon Resistor (chip)	4.7K 0.1 J				
	R206	**RG006470**	Carbon Resistor (chip)	4.7K 0.1 J				
	R207	**RG005220**	Carbon Resistor (chip)	220 0.1 J				
	R208	**RG005220**	Carbon Resistor (chip)	220 0.1 J				
*	R209	**RG005120**	Carbon Resistor (chip)	120 0.1 J				
*	R210	**RG005120**	Carbon Resistor (chip)	120 0.1 J				
*	R211	**RG007200**	Carbon Resistor (chip)	20K 0.1 J				
*	R212	**RG007200**	Carbon Resistor (chip)	20K 0.1 J				
	R213	**RG007100**	Carbon Resistor (chip)	10K 0.1 J				
	R214	**RG005680**	Carbon Resistor (chip)	680 0.1 J				
	R215	**RG006270**	Carbon Resistor (chip)	2.7K 0.1 J				
	R216	**RG007100**	Carbon Resistor (chip)	10K 0.1 J				
	R217	**RG005680**	Carbon Resistor (chip)	680 0.1 J				
	R218	**RG006270**	Carbon Resistor (chip)	2.7K 0.1 J				
	R219	**RG007100**	Carbon Resistor (chip)	10K 0.1 J				
	R220	**RG007100**	Carbon Resistor (chip)	10K 0.1 J				
	R221	**RG006270**	Carbon Resistor (chip)	2.7K 0.1 J				
	R222	**RG007100**	Carbon Resistor (chip)	10K 0.1 J				
	R223	**RG005680**	Carbon Resistor (chip)	680 0.1 J				
	R224	**RG006270**	Carbon Resistor (chip)	2.7K 0.1 J				
	R225	**RG006270**	Carbon Resistor (chip)	2.7K 0.1 J				
	R226	**RG007100**	Carbon Resistor (chip)	10K 0.1 J				
	R227	**RG005680**	Carbon Resistor (chip)	680 0.1 J				
	R228	**RG006270**	Carbon Resistor (chip)	2.7K 0.1 J				
	R229	**RG004100**	Carbon Resistor (chip)	10 0.1 J				
	R230	**RG004100**	Carbon Resistor (chip)	10 0.1 J				
	R231	**RG007560**	Carbon Resistor (chip)	56K 0.1 J				
	R232	**RG007330**	Carbon Resistor (chip)	33K 0.1 J				
	R233	**RG008220**	Carbon Resistor (chip)	220K 0.1 J				
	R234	**RG005220**	Carbon Resistor (chip)	220 0.1 J				
	R235	**RG007120**	Carbon Resistor (chip)	12K 0.1 J				
	R236	**RG006330**	Carbon Resistor (chip)	3.3K 0.1 J				
	R237	**RG007330**	Carbon Resistor (chip)	33K 0.1 J				
	R238	**RG008100**	Carbon Resistor (chip)	100K 0.1 J				
*	R239	**RG206220**	Carbon Resistor (chip)	2.2K 1/4 J				
*	R240	**RG206270**	Carbon Resistor (chip)	2.7K 1/4 J				
	R241	**RG005220**	Carbon Resistor (chip)	220 0.1 J				
	R242	**RG005220**	Carbon Resistor (chip)	220 0.1 J				
	R243	**RG007180**	Carbon Resistor (chip)	18K 0.1 J				
	R244	**RG007180**	Carbon Resistor (chip)	18K 0.1 J				
	R245	**RG005220**	Carbon Resistor (chip)	220 0.1 J				
	R246	**RG005220**	Carbon Resistor (chip)	220 0.1 J				
	R247	**RG006470**	Carbon Resistor (chip)	4.7K 0.1 J				
	R248	**RG006470**	Carbon Resistor (chip)	4.7K 0.1 J				
	R249	**RG007100**	Carbon Resistor (chip)	10K 0.1 J				
	R250	**RG007100**	Carbon Resistor (chip)	10K 0.1 J				
	R251	**RG004100**	Carbon Resistor (chip)	10 0.1 J				
	R252	**RG004100**	Carbon Resistor (chip)	10 0.1 J				
	R253	**RG008220**	Carbon Resistor (chip)	220K 0.1 J				
	R254	**RG008220**	Carbon Resistor (chip)	220K 0.1 J				
	R255	**RG007180**	Carbon Resistor (chip)	18K 0.1 J				
	R256	**RG007180**	Carbon Resistor (chip)	18K 0.1 J				
	R257	**RG007270**	Carbon Resistor (chip)	27K 0.1 J				
	-264	**RG007270**	Carbon Resistor (chip)	27K 0.1 J				
*	R265	**RG007360**	Carbon Resistor (chip)	36K 0.1 J				
*	R266	**RG007360**	Carbon Resistor (chip)	36K 0.1 J				
	R301	**RG008150**	Carbon Resistor (chip)	150K 0.1 J				
*	R302	**RG007150**	Carbon Resistor (chip)	15K 0.1 J				

❇: New Parts

RANK: Japan only

	REF NO.	PART NO.	DESCRIPTION			REMARKS	QTY	RANK
	R303	**RG008100**	Carbon Resistor (chip)	100K 0.1 J				
*	R304	**RG206270**	Carbon Resistor (chip)	2.7K 1/4 J				
*	R305	**RG007200**	Carbon Resistor (chip)	20K 0.1 J				
	R306	**RG007100**	Carbon Resistor (chip)	10K 0.1 J				
	-311	**RG007100**	Carbon Resistor (chip)	10K 0.1 J				
	R312	**RG007180**	Carbon Resistor (chip)	18K 0.1 J				
	R313	**RG007180**	Carbon Resistor (chip)	18K 0.1 J				
*	R314	**RG007360**	Carbon Resistor (chip)	36K 0.1 J				
*	-321	**RG007360**	Carbon Resistor (chip)	36K 0.1 J				
	R322	**RG007100**	Carbon Resistor (chip)	10K 0.1 J				
	R323	**RG007100**	Carbon Resistor (chip)	10K 0.1 J				
	R324	**RG007180**	Carbon Resistor (chip)	18K 0.1 J				
	R325	**RG007180**	Carbon Resistor (chip)	18K 0.1 J				
*	R326	**RG007360**	Carbon Resistor (chip)	36K 0.1 J				
*	R327	**RG007360**	Carbon Resistor (chip)	36K 0.1 J				
	R328	**RG007100**	Carbon Resistor (chip)	10K 0.1 J				
	R329	**RG007100**	Carbon Resistor (chip)	10K 0.1 J				
	R330	**RG007240**	Carbon Resistor (chip)	24K 0.1 J				
	-335	**RG007240**	Carbon Resistor (chip)	24K 0.1 J				
	R336	**RG007120**	Carbon Resistor (chip)	12K 0.1 J				
	-339	**RG007120**	Carbon Resistor (chip)	12K 0.1 J				
	R340	**RG005220**	Carbon Resistor (chip)	220 0.1 J				
	R341	**RG005220**	Carbon Resistor (chip)	220 0.1 J				
	R344	**RG007120**	Carbon Resistor (chip)	12K 0.1 J				
	R345	**RG007120**	Carbon Resistor (chip)	12K 0.1 J				
*	R346	**RG007360**	Carbon Resistor (chip)	36K 0.1 J				
*	-348	**RG007360**	Carbon Resistor (chip)	36K 0.1 J				
	R349	**RG007180**	Carbon Resistor (chip)	18K 0.1 J				
	R350	**RG007180**	Carbon Resistor (chip)	18K 0.1 J				
*	R351	**RG007360**	Carbon Resistor (chip)	36K 0.1 J				
	R352	**RG007180**	Carbon Resistor (chip)	18K 0.1 J				
	R353	**RG007180**	Carbon Resistor (chip)	18K 0.1 J				
	R354	**RG005220**	Carbon Resistor (chip)	220 0.1 J				
	R355	**RG005220**	Carbon Resistor (chip)	220 0.1 J				
	R356	**RG004100**	Carbon Resistor (chip)	10 0.1 J				
	R357	**RG004100**	Carbon Resistor (chip)	10 0.1 J				
	R358	**RG006330**	Carbon Resistor (chip)	3.3K 0.1 J				
	R359	**RG006330**	Carbon Resistor (chip)	3.3K 0.1 J				
	R360	**RG005560**	Carbon Resistor (chip)	560 0.1 J				
	-377	**RG005560**	Carbon Resistor (chip)	560 0.1 J				
	R378	**RG007470**	Carbon Resistor (chip)	47K 0.1 J				
	-397	**RG007470**	Carbon Resistor (chip)	47K 0.1 J				
	R398	**RG006330**	Carbon Resistor (chip)	3.3K 0.1 J				
	R399	**RG006330**	Carbon Resistor (chip)	3.3K 0.1 J				
	R400	**RG008100**	Carbon Resistor (chip)	100K 0.1 J				
	R401	**RG008100**	Carbon Resistor (chip)	100K 0.1 J				
*	R402	**RG206270**	Carbon Resistor (chip)	2.7K 1/4 J				
	R403	**RG007680**	Carbon Resistor (chip)	68K 0.1 J				
	-408	**RG007680**	Carbon Resistor (chip)	68K 0.1 J				
*	R409	**RG007360**	Carbon Resistor (chip)	36K 0.1 J				
*	R410	**RG007360**	Carbon Resistor (chip)	36K 0.1 J				
	R411	**RG007680**	Carbon Resistor (chip)	68K 0.1 J				
	R412	**RG007680**	Carbon Resistor (chip)	68K 0.1 J				
	R413	**RG007270**	Carbon Resistor (chip)	27K 0.1 J				
	R414	**RG007270**	Carbon Resistor (chip)	27K 0.1 J				
	R415	**RG005220**	Carbon Resistor (chip)	220 0.1 J				
	-418	**RG005220**	Carbon Resistor (chip)	220 0.1 J				
	R419	**RG007180**	Carbon Resistor (chip)	18K 0.1 J				
	-422	**RG007180**	Carbon Resistor (chip)	18K 0.1 J				
	R423	**RG005220**	Carbon Resistor (chip)	220 0.1 J				
	-426	**RG005220**	Carbon Resistor (chip)	220 0.1 J				
	R427	**RG007180**	Carbon Resistor (chip)	18K 0.1 J				
	R428	**RG006220**	Carbon Resistor (chip)	2.2K 0.1 J				
	R429	**RG006220**	Carbon Resistor (chip)	2.2K 0.1 J				
	R430	**RG007180**	Carbon Resistor (chip)	18K 0.1 J				
	R431	**RG007180**	Carbon Resistor (chip)	18K 0.1 J				
	R432	**RG006430**	Carbon Resistor (chip)	4.3K 0.1 J				
	R433	**RG006430**	Carbon Resistor (chip)	4.3K 0.1 J				
	R434	**RG006220**	Carbon Resistor (chip)	2.2K 0.1 J				
	R435	**RG006220**	Carbon Resistor (chip)	2.2K 0.1 J				

*: New Parts

RANK: Japan only

	REF NO.	PART NO.	DESCRIPTION			REMARKS	QTY	RANK
	R436	**RG007100**	Carbon Resistor (chip)	10K 0.1 J				
	-439	**RG007100**	Carbon Resistor (chip)	10K 0.1 J				
	R440	**RG007180**	Carbon Resistor (chip)	18K 0.1 J				
	R441	**RG008100**	Carbon Resistor (chip)	100K 0.1 J				
	R442	**RG007100**	Carbon Resistor (chip)	10K 0.1 J				
	R443	**RG007100**	Carbon Resistor (chip)	10K 0.1 J				
	R444	**RG007680**	Carbon Resistor (chip)	68K 0.1 J				
	R445	**RG007680**	Carbon Resistor (chip)	68K 0.1 J				
	R446	**RG007100**	Carbon Resistor (chip)	10K 0.1 J				
	-454	**RG007100**	Carbon Resistor (chip)	10K 0.1 J				
	R455	**RG004750**	Carbon Resistor (chip)	75 0.1 J				
	-472	**RG004750**	Carbon Resistor (chip)	75 0.1 J				
	R473	**RF357100**	Carbon Resistor (chip)	10.0K : D 1608				01
*	R474	**RF356680**	Carbon Resistor (chip)	6.8K : D 1608				01
*	R475	**RF356680**	Carbon Resistor (chip)	6.8K : D 1608				01
	R476	**RF357100**	Carbon Resistor (chip)	10.0K : D 1608				01
	R501	**RG006150**	Carbon Resistor (chip)	1.5K 0.1 J				
	R502	**RG006150**	Carbon Resistor (chip)	1.5K 0.1 J				
*	R503	**RG006120**	Carbon Resistor (chip)	1.2K 0.1 J				
*	R504	**RG006120**	Carbon Resistor (chip)	1.2K 0.1 J				
*	R505	**RG008120**	Carbon Resistor (chip)	120K 0.1 J				
*	R506	**RG008120**	Carbon Resistor (chip)	120K 0.1 J				
	R507	**RG006330**	Carbon Resistor (chip)	3.3K 0.1 J				
	-510	**RG006330**	Carbon Resistor (chip)	3.3K 0.1 J				
	R511	**RG005220**	Carbon Resistor (chip)	220 0.1 J				
	R512	**RG005220**	Carbon Resistor (chip)	220 0.1 J				
	R513	**RG006680**	Carbon Resistor (chip)	6.8K 0.1 J				
	-516	**RG006680**	Carbon Resistor (chip)	6.8K 0.1 J				
	R517	**RG007120**	Carbon Resistor (chip)	12K 0.1 J				
	R518	**RG007120**	Carbon Resistor (chip)	12K 0.1 J				
	R519	**RG005220**	Carbon Resistor (chip)	220 0.1 J				
	-524	**RG005220**	Carbon Resistor (chip)	220 0.1 J				
	R525	**RG006680**	Carbon Resistor (chip)	6.8K 0.1 J				
	R526	**RG006680**	Carbon Resistor (chip)	6.8K 0.1 J				
	R527	**RG007100**	Carbon Resistor (chip)	10K 0.1 J				
	R528	**RG007100**	Carbon Resistor (chip)	10K 0.1 J				
	R529	**RG004100**	Carbon Resistor (chip)	10 0.1 J				
	-534	**RG004100**	Carbon Resistor (chip)	10 0.1 J				
	R535	**RG006910**	Carbon Resistor (chip)	9.1K 0.1 J				
	R536	**RG006910**	Carbon Resistor (chip)	9.1K 0.1 J				
	R537	**RG007270**	Carbon Resistor (chip)	27K 0.1 J				
	-540	**RG007270**	Carbon Resistor (chip)	27K 0.1 J				
*	R541	**RG007360**	Carbon Resistor (chip)	36K 0.1 J				
*	R542	**RG007360**	Carbon Resistor (chip)	36K 0.1 J				
	R543	**RG006910**	Carbon Resistor (chip)	9.1K 0.1 J				
	R544	**RG006910**	Carbon Resistor (chip)	9.1K 0.1 J				
	R545	**RG007270**	Carbon Resistor (chip)	27K 0.1 J				
	-548	**RG007270**	Carbon Resistor (chip)	27K 0.1 J				
*	R549	**RG007360**	Carbon Resistor (chip)	36K 0.1 J				
*	R550	**RG007360**	Carbon Resistor (chip)	36K 0.1 J				
	R551	**RG006910**	Carbon Resistor (chip)	9.1K 0.1 J				
	R552	**RG006910**	Carbon Resistor (chip)	9.1K 0.1 J				
*	R553	**RG007360**	Carbon Resistor (chip)	36K 0.1 J				
*	R554	**RG007360**	Carbon Resistor (chip)	36K 0.1 J				
	R555	**RG007180**	Carbon Resistor (chip)	18K 0.1 J				
	R556	**RG007180**	Carbon Resistor (chip)	18K 0.1 J				
	R557	**RG007270**	Carbon Resistor (chip)	27K 0.1 J				
	-560	**RG007270**	Carbon Resistor (chip)	27K 0.1 J				
*	R561	**RG007360**	Carbon Resistor (chip)	36K 0.1 J				
*	R562	**RG007360**	Carbon Resistor (chip)	36K 0.1 J				
	R563	**RG007180**	Carbon Resistor (chip)	18K 0.1 J				
	R564	**RG007180**	Carbon Resistor (chip)	18K 0.1 J				
	R565	**RG007270**	Carbon Resistor (chip)	27K 0.1 J				
	-568	**RG007270**	Carbon Resistor (chip)	27K 0.1 J				
*	R569	**RG007360**	Carbon Resistor (chip)	36K 0.1 J				
*	-572	**RG007360**	Carbon Resistor (chip)	36K 0.1 J				
	R573	**RG007180**	Carbon Resistor (chip)	18K 0.1 J				
	R574	**RG007180**	Carbon Resistor (chip)	18K 0.1 J				
	R575	**RG008180**	Carbon Resistor (chip)	180K 0.1 J				
	R576	**RG008180**	Carbon Resistor (chip)	180K 0.1 J				

✻: New Parts

RANK: Japan only

	REF NO.	PART NO.	DESCRIPTION			REMARKS	QTY	RANK
	R577	**RG005220**	Carbon Resistor (chip)	220 0.1 J				
	R578	**RG005220**	Carbon Resistor (chip)	220 0.1 J				
	-580	**RG005220**	Carbon Resistor (chip)	220 0.1 J				
	R581	**RG008100**	Carbon Resistor (chip)	100K 0.1 J				
	R582	**RG008100**	Carbon Resistor (chip)	100K 0.1 J				
	R583	**RG205330**	Carbon Resistor (chip)	330 1/4 J				
	-585	**RG205330**	Carbon Resistor (chip)	330 1/4 J				
	R601	**RG008100**	Carbon Resistor (chip)	100K 0.1 J				
	-603	**RG008100**	Carbon Resistor (chip)	100K 0.1 J				
	R604	**RG006820**	Carbon Resistor (chip)	8.2K 0.1 J				
	R606	**RG006470**	Carbon Resistor (chip)	4.7K 0.1 J				
	R607	**RG008100**	Carbon Resistor (chip)	100K 0.1 J				
	R608	**RG007470**	Carbon Resistor (chip)	47K 0.1 J				
	R609	**RG006330**	Carbon Resistor (chip)	3.3K 0.1 J				
	R610	**RG007470**	Carbon Resistor (chip)	47K 0.1 J				
	R611	**RG007100**	Carbon Resistor (chip)	10K 0.1 J				
	R612	**RG007100**	Carbon Resistor (chip)	10K 0.1 J				
	R613	**RG006680**	Carbon Resistor (chip)	6.8K 0.1 J				
*	R614	**RG206220**	Carbon Resistor (chip)	2.2K 1/4 J				
*	-618	**RG206220**	Carbon Resistor (chip)	2.2K 1/4 J				
	R619	**RG008100**	Carbon Resistor (chip)	100K 0.1 J				
*	R620	**RF356390**	Carbon Resistor (chip)	3.9K : D 1608				
*	R621	**RF356390**	Carbon Resistor (chip)	3.9K : D 1608				
	R622	**RG008100**	Carbon Resistor (chip)	100K 0.1 J				
	-624	**RG008100**	Carbon Resistor (chip)	100K 0.1 J				
	R625	**RG006820**	Carbon Resistor (chip)	8.2K 0.1 J				
*	R626	**RF357820**	Carbon Resistor (chip)	82.0K : D 1608				01
*	R627	**RF357820**	Carbon Resistor (chip)	82.0K : D 1608				01
	R629	**RG006470**	Carbon Resistor (chip)	4.7K 0.1 J				
	R630	**RG008100**	Carbon Resistor (chip)	100K 0.1 J				
*	R631	**RG206270**	Carbon Resistor (chip)	2.7K 1/4 J				
	R632	**RG007470**	Carbon Resistor (chip)	47K 0.1 J				
	R633	**RG006330**	Carbon Resistor (chip)	3.3K 0.1 J				
	R634	**RG007470**	Carbon Resistor (chip)	47K 0.1 J				
*	R635	**RG004180**	Carbon Resistor (chip)	18 0.1 J				
*	R636	**RG004180**	Carbon Resistor (chip)	18 0.1 J				
	R637	**RG006680**	Carbon Resistor (chip)	6.8K 0.1 J				
*	R638	**RG206220**	Carbon Resistor (chip)	2.2K 1/4 J				
*	-642	**RG206220**	Carbon Resistor (chip)	2.2K 1/4 J				
*	-643	**RG006220**	Carbon Resistor (chip)	2.2K 0.1 J				
	R644	**RG007100**	Carbon Resistor (chip)	10K 0.1 J				
	R645	**RG006220**	Carbon Resistor (chip)	2.2K 0.1 J				
	R646	**RG007100**	Carbon Resistor (chip)	10K 0.1 J				
	-648	**RG007100**	Carbon Resistor (chip)	10K 0.1 J				
*	R649	**RF357360**	Carbon Resistor (chip)	36.0K : D 1608				
*	R650	**RF357360**	Carbon Resistor (chip)	36.0K : D 1608				
	R651	**RG004680**	Carbon Resistor (chip)	68 0.1 J				
	R652	**RG004680**	Carbon Resistor (chip)	68 0.1 J				
	R653	**RG007180**	Carbon Resistor (chip)	18K 0.1 J				
	R654	**RG007180**	Carbon Resistor (chip)	18K 0.1 J				
	R655	**RG007560**	Carbon Resistor (chip)	56K 0.1 J				
	R656	**RG007560**	Carbon Resistor (chip)	56K 0.1 J				
*	R657	**RG206150**	Carbon Resistor (chip)	1.5K 1/4 J				
*	R658	**RG206150**	Carbon Resistor (chip)	1.5K 1/4 J				
	R659	**RG007180**	Carbon Resistor (chip)	18K 0.1 J				
	R660	**RG007180**	Carbon Resistor (chip)	18K 0.1 J				
	R661	**RG007120**	Carbon Resistor (chip)	12K 0.1 J				
	-663	**RG007120**	Carbon Resistor (chip)	12K 0.1 J				
	R664	**RG007560**	Carbon Resistor (chip)	56K 0.1 J				
	R665	**RG007120**	Carbon Resistor (chip)	12K 0.1 J				
	R666	**RG007560**	Carbon Resistor (chip)	56K 0.1 J				
	R667	**RG004680**	Carbon Resistor (chip)	68 0.1 J				
	R668	**RG004680**	Carbon Resistor (chip)	68 0.1 J				
	R669	**RG007270**	Carbon Resistor (chip)	27K 0.1 J				
	R670	**RG007220**	Carbon Resistor (chip)	22K 0.1 J				
	R671	**RG007300**	Carbon Resistor (chip)	30K 0.1 J				
	R672	**RG007270**	Carbon Resistor (chip)	27K 0.1 J				
	R673	**RG007220**	Carbon Resistor (chip)	22K 0.1 J				
	R674	**RG007300**	Carbon Resistor (chip)	30K 0.1 J				
*	R675	**RG005330**	Carbon Resistor (chip)	330 0.1 J				

*: New Parts

RANK: Japan only

	REF NO.	PART NO.	DESCRIPTION			REMARKS	QTY	RANK
	R676	**RG007470**	Carbon Resistor (chip)	47K 0.1 J				
*	R677	**RG005330**	Carbon Resistor (chip)	330 0.1 J				
	R678	**RG007470**	Carbon Resistor (chip)	47K 0.1 J				
	R679	**RG007270**	Carbon Resistor (chip)	27K 0.1 J				
	R680	**RG007270**	Carbon Resistor (chip)	27K 0.1 J				
*	R681	**RG007390**	Carbon Resistor (chip)	39K 0.1 J				
*	R682	**RG007390**	Carbon Resistor (chip)	39K 0.1 J				
	R683	**RG008390**	Carbon Resistor (chip)	390K 0.1 J				
	-686	**RG008390**	Carbon Resistor (chip)	390K 0.1 J				
	R687	**RG007820**	Carbon Resistor (chip)	82K 0.1 J				
	R688	**RG007820**	Carbon Resistor (chip)	82K 0.1 J				
	R689	**RG007220**	Carbon Resistor (chip)	22K 0.1 J				
	R690	**RG007220**	Carbon Resistor (chip)	22K 0.1 J				
	R691	**RG005220**	Carbon Resistor (chip)	220 0.1 J				
	R692	**RG005220**	Carbon Resistor (chip)	220 0.1 J				
*	R693	**RG008330**	Carbon Resistor (chip)	330K 0.1 J				
*	R694	**RG008330**	Carbon Resistor (chip)	330K 0.1 J				
*	R695	**RG206270**	Carbon Resistor (chip)	2.7K 1/4 J				
	R701	**RG007560**	Carbon Resistor (chip)	56K 0.1 J				
	-704	**RG007560**	Carbon Resistor (chip)	56K 0.1 J				
*	R705	**RG007360**	Carbon Resistor (chip)	36K 0.1 J				
*	-708	**RG007360**	Carbon Resistor (chip)	36K 0.1 J				
	RJ01	**RG000000**	Carbon Resistor (chip)	0 0.1 J				
	-20	**RG000000**	Carbon Resistor (chip)	0 0.1 J				
	SW101	**V6962600**	Push Switch			AUX1(CH17/18)		02
	SW102	**V6962600**	Push Switch			AUX2(CH17/18)		02
	SW103	**V6962600**	Push Switch			PFL(CH17/18)		02
	SW104	**VZ251800**	Push Switch	ESB68149		CH ON/OFF(CH17/18)		03
	SW201	**V6962600**	Push Switch			AUX1(CH19/20)		02
	SW202	**V6962600**	Push Switch			AUX2(CH19/20)		02
	SW203	**V6962600**	Push Switch			PFL(CH19/20)		02
	SW204	**VZ251800**	Push Switch	ESB68149		CH ON/OFF(CH19/20)		03
	SW301	**V6962600**	Push Switch			STAND-BY		02
	SW302	**VZ251800**	Push Switch	ESB68149		ST GRAPHIC EQUALIZER		03
	SW303	**V6962600**	Push Switch			PFL(ST OUT)		02
	SW304	**V6962600**	Push Switch			AFL(ST OUT)		02
	SW305	**V6962600**	Push Switch			AFL(MONO OUT)		02
	SW306	**V6962600**	Push Switch			AFL(AUX1)		02
	SW307	**V6962600**	Push Switch			AFL(AUX2)		02
	SW308	**VV051500**	Slide Switch	SSSU012NB1-YL		LPF ON/OFF(MONO OUT)		02
	SW501	**V6962600**	Push Switch			PFL(ST SUB IN1)		02
	SW502	**V6962600**	Push Switch			PFL(ST SUB IN2)		02
	SW503	**V6962600**	Push Switch			PFL(2TR IN)		02
	SW504	**V6962600**	Push Switch			PFL(EFFECT1 RTN)		02
	SW505	**V6962600**	Push Switch			PFL(EFFECT2 RTN)		02
	SW506	**V3835200**	Push Switch			TAP		01
	SW507	**V3835200**	Push Switch			EFFECT2 ON/OFF		01
	SW508	**V3835200**	Push Switch			EFFECT1 ON/OFF		01
*	SW601	**V8059600**	Slide Switch	SS001P244OJcPA6		LIMITER		
*	SW602	**V8058000**	Slide Switch	SS001P242BPcA6		YAMAHA SPEAKER PROCESSING		03
*	SW603	**V8059400**	Slide Switch	SS001P243OHcPA6		POWER 500W/300W/100W		03
	VR101	**VZ611000**	Rotary Variable Resistor	C 20K RK12L123		GAIN(CH17/18)		05
	VR102	**VZ611100**	Rotary Variable Resistor	B 50K RK12L123		LOW(CH17/18)		05
	VR103	**VZ611100**	Rotary Variable Resistor	B 50K RK12L123		MID(CH17/18)		05
	VR104	**VZ611100**	Rotary Variable Resistor	B 50K RK12L123		HIGH(CH17/18)		05
	VR105	**VU804200**	Slide Variable Resistor	RS60112G6039-10KA2		FADER(CH17/18)		04
	VR106	**VZ610800**	Rotary Variable Resistor	AC 20K RK12L123		BAL(CH17/18)		03
	VR107	**VZ610900**	Rotary Variable Resistor	A 20K RK12L12C		AUX1(CH17/18)		02
	VR108	**VZ610900**	Rotary Variable Resistor	A 20K RK12L12C		AUX2(CH17/18)		02
	VR109	**VZ610900**	Rotary Variable Resistor	A 20K RK12L12C		EFFECT1(CH17/18)		02
	VR110	**VZ610900**	Rotary Variable Resistor	A 20K RK12L12C		EFFECT2(CH17/18)		02
	VR201	**VZ611000**	Rotary Variable Resistor	C 20K RK12L123		GAIN(CH19/20)		05
	VR202	**VZ611100**	Rotary Variable Resistor	B 50K RK12L123		LOW(CH19/20)		05
	VR203	**VZ611100**	Rotary Variable Resistor	B 50K RK12L123		MID(CH19/20)		05
	VR204	**VZ611100**	Rotary Variable Resistor	B 50K RK12L123		HIGH(CH19/20)		05
	VR205	**VU804200**	Slide Variable Resistor	RS60112G6039-10KA2		FADER(CH19/20)		04
	VR206	**VZ610800**	Rotary Variable Resistor	AC 20K RK12L123		BAL(CH19/20)		03
	VR207	**VZ610900**	Rotary Variable Resistor	A 20K RK12L12C		AUX1(CH19/20)		02
	VR208	**VZ610900**	Rotary Variable Resistor	A 20K RK12L12C		AUX2(CH19/20)		02
	VR209	**VZ610900**	Rotary Variable Resistor	A 20K RK12L12C		EFFECT1(CH19/20)		02

*: New Parts

RANK: Japan only

	REF NO.	PART NO.	DESCRIPTION			REMARKS	QTY	RANK
	VR210	**VZ610900**	Rotary Variable Resistor	A 20K RK12L12C		EFFECT2(CH19/20)		02
	VR301	**VU804300**	Slide Variable Resistor	W 20.0K RS20H12		ST GRAPHIC EQUALIZER(63/1		03
	-309	**VU804300**	Slide Variable Resistor	W 20.0K RS20H12		25/250/500/1K/2K/4K/8K/16K)		03
	VR310	**VZ610900**	Rotary Variable Resistor	A 20K RK12L12C		ST SUB OUT		02
	VR311	**VU804200**	Slide Variable Resistor	RS60112G6039-10KA2		FADER(ST OUT)		04
	VR312	**VU804100**	Slide Variable Resistor	RS6011YG6036-10KA		FADER(MONO OUT)		04
	VR313	**VU804100**	Slide Variable Resistor	RS6011YG6036-10KA		FADER(AUX1)		04
	VR314	**VU804100**	Slide Variable Resistor	RS6011YG6036-10KA		FADER(AUX2)		04
*	VR315	**V8539700**	Rotary Variable Resistor	C 20K RK14K123		LPF(MONO OUT)		
	VR501	**VZ610900**	Rotary Variable Resistor	A 20K RK12L12C		ST SUB IN1(ST)		02
	VR502	**VZ610900**	Rotary Variable Resistor	A 20K RK12L12C		ST SUB IN1(AUX1)		02
	VR503	**VZ610900**	Rotary Variable Resistor	A 20K RK12L12C		ST SUB IN1(AUX2)		02
	VR504	**VZ610900**	Rotary Variable Resistor	A 20K RK12L12C		ST SUB IN2(ST)		02
	VR505	**VZ610900**	Rotary Variable Resistor	A 20K RK12L12C		ST SUB IN2(AUX1)		02
	VR506	**VZ610900**	Rotary Variable Resistor	A 20K RK12L12C		ST SUB IN2(AUX2)		02
	VR507	**VZ610900**	Rotary Variable Resistor	A 20K RK12L12C		2TR IN		02
	VR508	**VU804200**	Slide Variable Resistor	RS60112G6039-10KA2		FADER(EFFECT2 RTN)		04
	VR509	**VZ610900**	Rotary Variable Resistor	A 20K RK12L12C		EFFECT1(AUX1)		02
	VR510	**VZ610900**	Rotary Variable Resistor	A 20K RK12L12C		EFFECT1(AUX2)		02
	VR511	**VU804200**	Slide Variable Resistor	RS60112G6039-10KA2		FADER(EFFECT1 RTN)		04
	VR512	**VZ610900**	Rotary Variable Resistor	A 20K RK12L12C		EFFECT2(AUX1)		02
	VR513	**VZ610900**	Rotary Variable Resistor	A 20K RK12L12C		EFFECT2(AUX2)		02
*	VR514	**V8287400**	Rotary Variable Resistor	B 5.0s XV09213P		EFFECT2 PARAMETER		01
	VR515	**VZ610900**	Rotary Variable Resistor	A 20K RK12L12C		PHONES		02
*	VR516	**V8287400**	Rotary Variable Resistor	B 5.0s XV09213P		EFFECT1 PARAMETER		01
	ZD101	**VU171800**	Zener Diode	UDZ 4.7BTE-17 4.7V				01
	ZD201	**VU171800**	Zener Diode	UDZ 4.7BTE-17 4.7V				01
		V8269600	Circuit Board	PWR		(X0626B0)		
		--	Jumper Wire	0.60		(VV29140)	113	01
		--	Jumper Wire	0.60 TP		(V829020)	69	
	C101	**VZ004000**	Electrolytic Cap.-SK	2.2 200.0V				01
	C102	**VZ004000**	Electrolytic Cap.-SK	2.2 200.0V				01
	C103	**UR838100**	Electrolytic Cap.	100.00 16.0V				01
	C104	**FU451680**	Mica Capacitor	68P 500V J				01
	C105	**FU451820**	Mica Capacitor	82P 500V J				01
	C106	**VZ004000**	Electrolytic Cap.-SK	2.2 200.0V				01
	C107	**VZ004000**	Electrolytic Cap.-SK	2.2 200.0V				01
	C108	**UR838100**	Electrolytic Cap.	100.00 16.0V				01
	C109	**FU451680**	Mica Capacitor	68P 500V J				01
	C110	**FU451820**	Mica Capacitor	82P 500V J				01
	C111	**UR877100**	Electrolytic Cap.	10.00 63.0V				01
	C112	**UR877100**	Electrolytic Cap.	10.00 63.0V				01
	C113	**VZ354000**	Ceramic Capacitor-F	0.0100 50V Z				01
	C114	**VZ353900**	Ceramic Cap.-B	1000P 50V K				01
	C115	**VZ353900**	Ceramic Cap.-B	1000P 50V K				01
	C116	**UA953220**	Mylar Capacitor	2200P 50V J				01
	C117	**V4567500**	Ceramic Capacitor-SL	10P 500V K				
	C118	**V4567500**	Ceramic Capacitor-SL	10P 500V K				
	C119	**UR877100**	Electrolytic Cap.	10.00 63.0V				01
	C120	**UR877100**	Electrolytic Cap.	10.00 63.0V				01
	C121	**VZ354000**	Ceramic Capacitor-F	0.0100 50V Z				01
	C122	**V4567500**	Ceramic Capacitor-SL	10P 500V K				
	C123	**V4567500**	Ceramic Capacitor-SL	10P 500V K				
	C124	**VZ353900**	Ceramic Cap.-B	1000P 50V K				01
	C125	**VZ353900**	Ceramic Cap.-B	1000P 50V K				01
	C126	**UA953220**	Mylar Capacitor	2200P 50V J				01
	C127	**VZ004000**	Electrolytic Cap.-SK	2.2 200.0V				01
	C128	**VZ004000**	Electrolytic Cap.-SK	2.2 200.0V				01
	C129	**V3280500**	Ceramic Capacitor-B	100P 500 K				01
	C130	**V3280500**	Ceramic Capacitor-B	100P 500 K				01
	C131	**VV082200**	Mylar Capacitor	3.3000 100V M				03
	C132	**VV082200**	Mylar Capacitor	3.3000 100V M				03
	C133	**VZ004000**	Electrolytic Cap.-SK	2.2 200.0V				01
	C134	**VZ004000**	Electrolytic Cap.-SK	2.2 200.0V				01
	C135	**VZ354300**	Ceramic Capacitor-E	0.0022 500 M				01
	C136	**VZ354300**	Ceramic Capacitor-E	0.0022 500 M				01
	C137	**VZ003800**	Electrolytic Cap.-SK	100.0 160.0V				02
	C138	**VZ003800**	Electrolytic Cap.-SK	100.0 160.0V				02
	C139	**VZ354600**	Monolithic Ceramic Cap.	0.10 50V Z				01

*: New Parts

RANK: Japan only

REF NO.	PART NO.	DESCRIPTION			REMARKS	QTY	RANK
C140	**VZ354600**	Monolithic Ceramic Cap.	0.10 50V Z				01
C143	**VZ354600**	Monolithic Ceramic Cap.	0.10 50V Z				01
C144	**VZ354600**	Monolithic Ceramic Cap.	0.10 50V Z				01
C146	**UR828470**	Electrolytic Cap.	470.00 10.0V				01
C147	**UR857470**	Electrolytic Cap.	47.00 35.0V				01
C148	**UR877100**	Electrolytic Cap.	10.00 63.0V				01
-153	**UR877100**	Electrolytic Cap.	10.00 63.0V				01
C154	**UR896470**	Electrolytic Cap.	4.7 100.0V				
C155	**UR877100**	Electrolytic Cap.	10.00 63.0V				01
-157	**UR877100**	Electrolytic Cap.	10.00 63.0V				01
C158	**UR896470**	Electrolytic Cap.	4.7 100.0V				
C159	**UR877100**	Electrolytic Cap.	10.00 63.0V				01
C160	**UR877100**	Electrolytic Cap.	10.00 63.0V				01
C161	**UR896470**	Electrolytic Cap.	4.7 100.0V				
C162	**UR866100**	Electrolytic Cap.	1.00 50.0V				01
C163	**UA953220**	Mylar Capacitor	2200P 50V J				01
C164	**UA953220**	Mylar Capacitor	2200P 50V J				01
CN101	**V3765300**	Connector Base Post	M24185XX 15 TE				
CN102	**LB932030**	Base Post Connector	VH- 3P TE				01
* CN103	**V3764800**	Connector Base Post	M24185XX 10P TE				
CN104	**VV066200**	Connector Base Post	M2426XX 2P TE				01
CN105	**V3764000**	Connector Base Post	M24185XX 2P TE				
D101	**VD631600**	Diode	1SS133,176,HSS104				01
-108	**VD631600**	Diode	1SS133,176,HSS104				01
D109	**VG437700**	Zener Diode	MTZ J 5.6B 5.6V				01
D110	**VG437700**	Zener Diode	MTZ J 5.6B 5.6V				01
D111	**VQ469600**	Diode	HSS82				01
D112	**VD631600**	Diode	1SS133,176,HSS104				01
D113	**VD631600**	Diode	1SS133,176,HSS104				01
D114	**VQ469600**	Diode	HSS82				01
-117	**VQ469600**	Diode	HSS82				01
D118	**VN478200**	Diode	D1NL20U				01
D119	**VN478200**	Diode	D1NL20U				01
D120	**VU801600**	Diode	1N4004L 26				01
D121	**VU801600**	Diode	1N4004L 26				01
D122	**VD631600**	Diode	1SS133,176,HSS104				01
-125	**VD631600**	Diode	1SS133,176,HSS104				01
D126	**VG437700**	Zener Diode	MTZ J 5.6B 5.6V				01
D127	**VG437700**	Zener Diode	MTZ J 5.6B 5.6V				01
D128	**VQ469600**	Diode	HSS82				01
D129	**VD631600**	Diode	1SS133,176,HSS104				01
D130	**VD631600**	Diode	1SS133,176,HSS104				01
D131	**VN478200**	Diode	D1NL20U				01
D132	**VN478200**	Diode	D1NL20U				01
D133	**VQ469600**	Diode	HSS82				01
-136	**VQ469600**	Diode	HSS82				01
D137	**VU801600**	Diode	1N4004L 26				01
D138	**VU801600**	Diode	1N4004L 26				01
D139	**VR149700**	Diode Stack	D8LD40 8.0A 400V				04
D140	**VR149700**	Diode Stack	D8LD40 8.0A 400V				04
D141	**VU801600**	Diode	1N4004L 26				01
D142	**VU801600**	Diode	1N4004L 26				01
D143	**VS135800**	Diode Stack	FMX-22S 10.0A 200V				03
D144	**VS135800**	Diode Stack	FMX-22S 10.0A 200V				03
D145	**VU801600**	Diode	1N4004L 26				01
D146	**VD631600**	Diode	1SS133,176,HSS104				01
D147	**VD631600**	Diode	1SS133,176,HSS104				01
D148	**VU801600**	Diode	1N4004L 26				01
D149	**VU801600**	Diode	1N4004L 26				01
D150	**VG438900**	Zener Diode	MTZ J 8.2B 8.2V				01
D151	**VU801600**	Diode	1N4004L 26				01
D152	**VU801600**	Diode	1N4004L 26				01
D153	**VG440800**	Zener Diode	MTZ J 15.0B 15.0V				01
D154	**VG443100**	Zener Diode	MTZ J 27.0D 27.0V				01
D155	**VG440800**	Zener Diode	MTZ J 15.0B 15.0V				01
D156	**VG443100**	Zener Diode	MTZ J 27.0D 27.0V				01
D157	**VG443100**	Zener Diode	MTZ J 27.0D 27.0V				01
D158	**VG443700**	Zener Diode	MTZ J 33.0B 33.0V				01
E101	**VV075700**	Terminal Plate					01
IC101	**XD853A00**	IC	NJM7815FA		REGULATOR +15V		03

❇: New Parts

RANK: Japan only

	REF NO.	PART NO.	DESCRIPTION			REMARKS	QTY	RANK
	IC102	**XD854A00**	IC	NJM7915FA		REGULATOR -15V		03
	IC103	**XJ607A00**	IC	NJM7805FA		REGULATOR +5V		02
	IC104	**XJ607A00**	IC	NJM7805FA		REGULATOR +5V		02
	IC105	**XJ608A00**	IC	NJM7812FA		REGULATOR +12V		02
*	JK101	**V8102300**	Phone Jack	STJACK LJB0661		SPEAKERS A-2		02
*	JK102	**V8102300**	Phone Jack	STJACK LJB0661		SPEAKERS B-2		02
	L101	**V4668300**	Coil	OH-20 100UH				08
	L102	**V4668300**	Coil	OH-20 100UH				08
	L103	**GE300670**	Ferrite Bead	BL02RN2-R62T4				02
	L104	**GE300670**	Ferrite Bead	BL02RN2-R62T4				02
	L105	**VR150900**	Coil	RZ-001 21mm				02
	L106	**VR150900**	Coil	RZ-001 21mm				02
	PR101	**VL965100**	Positive Thermistor	PTH9M04BE222TS2				04
	PR102	**VL964800**	Positive Thermistor	PTH9M04BH222TS2				04
	Q101	**IC1815M0**	Transistor	2SC1815 Y,GR				01
	Q102	**IA097030**	Transistor	2SA970 GR,BL				01
	Q103	**IC224030**	Transistor	2SC2240 GR,BL				01
	Q104	**IA097030**	Transistor	2SA970 GR,BL				01
	Q105	**IA097030**	Transistor	2SA970 GR,BL				01
	Q106	**IC1815M0**	Transistor	2SC1815 Y,GR				01
	Q107	**VU418400**	Transistor	2SA1371 D,E				01
	Q108	**VU418600**	Transistor	2SC3468 D,E				01
	Q109	**IC1815M0**	Transistor	2SC1815 Y,GR				01
	Q110	**IA097030**	Transistor	2SA970 GR,BL				01
	Q111	**IC224030**	Transistor	2SC2240 GR,BL				01
	Q112	**IA097030**	Transistor	2SA970 GR,BL				01
	Q113	**IA097030**	Transistor	2SA970 GR,BL				01
	Q114	**IC1815M0**	Transistor	2SC1815 Y,GR				01
	Q115	**VU418400**	Transistor	2SA1371 D,E				01
	Q116	**VU418600**	Transistor	2SC3468 D,E				01
	Q117	**VU418400**	Transistor	2SA1371 D,E				01
	Q118	**VU418600**	Transistor	2SC3468 D,E				01
	Q119	**V2797700**	Transistor	2SC5395 E,F				01
	Q120	**V2797600**	Transistor	2SA1993 E,F				01
	Q121	**VU418600**	Transistor	2SC3468 D,E				01
	Q122	**VU418400**	Transistor	2SA1371 D,E				01
	Q123	**VU418400**	Transistor	2SA1371 D,E				01
	Q124	**VU418600**	Transistor	2SC3468 D,E				01
	Q125	**V2797700**	Transistor	2SC5395 E,F				01
	Q126	**V2797600**	Transistor	2SA1993 E,F				01
	Q127	**VU418600**	Transistor	2SC3468 D,E				01
	Q128	**VU418400**	Transistor	2SA1371 D,E				01
	Q129	**VU418600**	Transistor	2SC3468 D,E				01
	Q130	**VU418400**	Transistor	2SA1371 D,E				01
	Q131	**V2797700**	Transistor	2SC5395 E,F				01
	Q132	**V2797700**	Transistor	2SC5395 E,F				01
	Q133	**V2797700**	Transistor	2SC5395 E,F				01
	Q134	**V2797600**	Transistor	2SA1993 E,F				01
	Q135	**VD678500**	Digital Transistor	DTA114ES				01
	Q136	**VS883400**	Transistor	2SD2394 E,F				02
	Q201N	**VR732800**	Transistor	A1859A/C4883A				04
	Q201P	**VR732800**	Transistor	A1859A/C4883A				04
	Q202N	**VZ222300**	Pair Transistor	A1492C3856(Z)(210)				06
	-204N	**VZ222300**	Pair Transistor	A1492C3856(Z)(210)				06
	Q202P	**VZ222300**	Pair Transistor	A1492C3856(Z)(210)				06
	-204P	**VZ222300**	Pair Transistor	A1492C3856(Z)(210)				06
	Q205N	**VR732800**	Transistor	A1859A/C4883A				04
	Q205P	**VR732800**	Transistor	A1859A/C4883A				04
	Q206N	**VZ222300**	Pair Transistor	A1492C3856(Z)(210)				06
	-208N	**VZ222300**	Pair Transistor	A1492C3856(Z)(210)				06
	Q206P	**VZ222300**	Pair Transistor	A1492C3856(Z)(210)				06
	-208P	**VZ222300**	Pair Transistor	A1492C3856(Z)(210)				06
	Q209N	**VR732800**	Transistor	A1859A/C4883A				04
	Q209P	**VR732800**	Transistor	A1859A/C4883A				04
	Q210N	**VZ222300**	Pair Transistor	A1492C3856(Z)(210)				06
	-212N	**VZ222300**	Pair Transistor	A1492C3856(Z)(210)				06
	Q210P	**VZ222300**	Pair Transistor	A1492C3856(Z)(210)				06
	-212P	**VZ222300**	Pair Transistor	A1492C3856(Z)(210)				06
	Q213N	**VR732800**	Transistor	A1859A/C4883A				04
	Q213P	**VR732800**	Transistor	A1859A/C4883A				04

*: New Parts

RANK: Japan only

REF NO.	PART NO.	DESCRIPTION			REMARKS	QTY	RANK
Q214N	**VZ222300**	Pair Transistor	A1492C3856(Z)(210)				06
-216N	**VZ222300**	Pair Transistor	A1492C3856(Z)(210)				06
Q214P	**VZ222300**	Pair Transistor	A1492C3856(Z)(210)				06
-216P	**VZ222300**	Pair Transistor	A1492C3856(Z)(210)				06
R101	**HF457220**	Carbon Resistor	22.0K 1/4 J				01
R102	**VV312800**	Metal Film Resistor	680.0 1/4 F				01
R103	**HF455560**	Carbon Resistor	560.0 1/4 J				01
R104	**HF455100**	Carbon Resistor	100.0 1/4 J				01
R105	**HF455560**	Carbon Resistor	560.0 1/4 J				01
R106	**HF455100**	Carbon Resistor	100.0 1/4 J				01
R107	**HF457470**	Carbon Resistor	47.0K 1/4 J				01
R108	**HF455560**	Carbon Resistor	560.0 1/4 J				01
R109	**HF457470**	Carbon Resistor	47.0K 1/4 J				01
R110	**VV312900**	Metal Film Resistor	22K 1/4 F				01
R111	**HF455330**	Carbon Resistor	330.0 1/4 J				01
R112	**HF455330**	Carbon Resistor	330.0 1/4 J				01
R113	**HF457220**	Carbon Resistor	22.0K 1/4 J				01
R114	**VV312800**	Metal Film Resistor	680.0 1/4 F				01
R115	**HF455560**	Carbon Resistor	560.0 1/4 J				01
R116	**HF455100**	Carbon Resistor	100.0 1/4 J				01
R117	**HF455560**	Carbon Resistor	560.0 1/4 J				01
R118	**HF455100**	Carbon Resistor	100.0 1/4 J				01
R119	**HF457470**	Carbon Resistor	47.0K 1/4 J				01
R120	**HF455560**	Carbon Resistor	560.0 1/4 J				01
R121	**HF457470**	Carbon Resistor	47.0K 1/4 J				01
R122	**VV312900**	Metal Film Resistor	22K 1/4 F				01
R123	**HF455330**	Carbon Resistor	330.0 1/4 J				01
R124	**HF455330**	Carbon Resistor	330.0 1/4 J				01
R125	**HF455220**	Carbon Resistor	220.0 1/4 J				01
R126	**HF455220**	Carbon Resistor	220.0 1/4 J				01
R127	**HF457470**	Carbon Resistor	47.0K 1/4 J				01
-130	**HF457470**	Carbon Resistor	47.0K 1/4 J				01
R131	**HF455560**	Carbon Resistor	560.0 1/4 J				01
R132	**HF455560**	Carbon Resistor	560.0 1/4 J				01
R133	**HF457150**	Carbon Resistor	15.0K 1/4 J				01
R134	**HF457150**	Carbon Resistor	15.0K 1/4 J				01
R135	**VZ008600**	Flame Proof C. Resistor	150.0 1/4 J				01
R136	**VZ008600**	Flame Proof C. Resistor	150.0 1/4 J				01
R137	**VZ009300**	Flame Proof C. Resistor	330.0 1/4 J				01
R138	**VZ009300**	Flame Proof C. Resistor	330.0 1/4 J				01
R139	**VV276800**	Flame Proof C. Resistor	100 1/4 J				01
-142	**VV276800**	Flame Proof C. Resistor	100 1/4 J				01
R143	**VZ009100**	Flame Proof C. Resistor	33.0 1/4 J				01
R144	**VZ008800**	Flame Proof C. Resistor	22.0 1/4 J				01
R145	**VZ008800**	Flame Proof C. Resistor	22.0 1/4 J				01
R146	**VZ009100**	Flame Proof C. Resistor	33.0 1/4 J				01
R147	**V4833200**	Wire Wound Resistor	0.22 5W K				01
R148	**V4833200**	Wire Wound Resistor	0.22 5W K				01
R149	**VZ009100**	Flame Proof C. Resistor	33.0 1/4 J				01
R150	**VZ008800**	Flame Proof C. Resistor	22.0 1/4 J				01
R151	**VZ008800**	Flame Proof C. Resistor	22.0 1/4 J				01
R152	**VZ009100**	Flame Proof C. Resistor	33.0 1/4 J				01
R153	**V4833200**	Wire Wound Resistor	0.22 5W K				01
R154	**V4833200**	Wire Wound Resistor	0.22 5W K				01
R155	**VZ009100**	Flame Proof C. Resistor	33.0 1/4 J				01
R156	**VZ009100**	Flame Proof C. Resistor	33.0 1/4 J				01
R157	**VZ008800**	Flame Proof C. Resistor	22.0 1/4 J				01
R158	**VZ008800**	Flame Proof C. Resistor	22.0 1/4 J				01
R159	**V4833200**	Wire Wound Resistor	0.22 5W K				01
R160	**V4833200**	Wire Wound Resistor	0.22 5W K				01
R161	**HF455220**	Carbon Resistor	220.0 1/4 J				01
R162	**HF455220**	Carbon Resistor	220.0 1/4 J				01
R163	**HF457470**	Carbon Resistor	47.0K 1/4 J				01
-166	**HF457470**	Carbon Resistor	47.0K 1/4 J				01
R167	**HF455560**	Carbon Resistor	560.0 1/4 J				01
R168	**HF455560**	Carbon Resistor	560.0 1/4 J				01
R169	**HF457150**	Carbon Resistor	15.0K 1/4 J				01
R170	**HF457150**	Carbon Resistor	15.0K 1/4 J				01
R171	**VZ009300**	Flame Proof C. Resistor	330.0 1/4 J				01
R172	**VZ009300**	Flame Proof C. Resistor	330.0 1/4 J				01

❇: New Parts

RANK: Japan only

REF NO.	PART NO.	DESCRIPTION			REMARKS	QTY	RANK
R173	**VV276800**	Flame Proof C. Resistor	100 1/4 J				01
R174	**VZ008600**	Flame Proof C. Resistor	150.0 1/4 J				01
R175	**VV276800**	Flame Proof C. Resistor	100 1/4 J				01
R176	**VZ008600**	Flame Proof C. Resistor	150.0 1/4 J				01
R177	**VV276800**	Flame Proof C. Resistor	100 1/4 J				01
R178	**VV276800**	Flame Proof C. Resistor	100 1/4 J				01
R179	**VZ009100**	Flame Proof C. Resistor	33.0 1/4 J				01
R180	**VZ009100**	Flame Proof C. Resistor	33.0 1/4 J				01
R181	**VZ008800**	Flame Proof C. Resistor	22.0 1/4 J				01
R182	**VZ008800**	Flame Proof C. Resistor	22.0 1/4 J				01
R183	**V4833200**	Wire Wound Resistor	0.22 5W K				01
R184	**V4833200**	Wire Wound Resistor	0.22 5W K				01
R185	**VZ008800**	Flame Proof C. Resistor	22.0 1/4 J				01
R186	**VZ009100**	Flame Proof C. Resistor	33.0 1/4 J				01
R187	**VZ009100**	Flame Proof C. Resistor	33.0 1/4 J				01
R188	**VZ008800**	Flame Proof C. Resistor	22.0 1/4 J				01
R189	**V4833200**	Wire Wound Resistor	0.22 5W K				01
R190	**V4833200**	Wire Wound Resistor	0.22 5W K				01
R191	**VZ009100**	Flame Proof C. Resistor	33.0 1/4 J				01
R192	**VZ008800**	Flame Proof C. Resistor	22.0 1/4 J				01
R193	**VZ009100**	Flame Proof C. Resistor	33.0 1/4 J				01
R194	**VZ008800**	Flame Proof C. Resistor	22.0 1/4 J				01
R195	**V4833200**	Wire Wound Resistor	0.22 5W K				01
R196	**V4833200**	Wire Wound Resistor	0.22 5W K				01
R197	**HF456560**	Carbon Resistor	5.6K 1/4 J				01
R198	**HF456560**	Carbon Resistor	5.6K 1/4 J				01
R199	**VZ008800**	Flame Proof C. Resistor	22.0 1/4 J				01
R200	**VZ008700**	Flame Proof C. Resistor	2.2K 1/4 J				01
R201	**VZ008600**	Flame Proof C. Resistor	150.0 1/4 J				01
R202	**VZ008800**	Flame Proof C. Resistor	22.0 1/4 J				01
R203	**VZ008600**	Flame Proof C. Resistor	150.0 1/4 J				01
R204	**VZ008700**	Flame Proof C. Resistor	2.2K 1/4 J				01
R205	**VV313600**	Flame Proof C. Resistor	2.2 1/4 J				01
R206	**VV313600**	Flame Proof C. Resistor	2.2 1/4 J				01
R207	**VZ370200**	Wire Wound Resistor	0.1 5W K				01
R208	**VV313600**	Flame Proof C. Resistor	2.2 1/4 J				01
R209	**VV313600**	Flame Proof C. Resistor	2.2 1/4 J				01
R210	**VZ370200**	Wire Wound Resistor	0.1 5W K				01
R211	**VV313600**	Flame Proof C. Resistor	2.2 1/4 J				01
R212	**VZ370200**	Wire Wound Resistor	0.1 5W K				01
R213	**VV313600**	Flame Proof C. Resistor	2.2 1/4 J				01
R214	**VV313600**	Flame Proof C. Resistor	2.2 1/4 J				01
R215	**VZ370200**	Wire Wound Resistor	0.1 5W K				01
R216	**VZ370200**	Wire Wound Resistor	0.1 5W K				01
R217	**VV313600**	Flame Proof C. Resistor	2.2 1/4 J				01
R218	**VZ370200**	Wire Wound Resistor	0.1 5W K				01
R219	**VV276700**	Flame Proof C. Resistor	4.7 1/4 J				01
-222	**VV276700**	Flame Proof C. Resistor	4.7 1/4 J				01
R223	**VV313600**	Flame Proof C. Resistor	2.2 1/4 J				01
-228	**VV313600**	Flame Proof C. Resistor	2.2 1/4 J				01
R229	**VV313900**	Flame Proof C. Resistor	680.0 1/4 J				01
R230	**VV313900**	Flame Proof C. Resistor	680.0 1/4 J				01
R231	**VV313800**	Flame Proof C. Resistor	220.0 1/4 J				01
R232	**VV313800**	Flame Proof C. Resistor	220.0 1/4 J				01
R233	**VV058500**	Flame Proof C. Resistor	10.0 1/4 J				01
-236	**VV058500**	Flame Proof C. Resistor	10.0 1/4 J				01
R237	**HF458150**	Carbon Resistor	150.0K 1/4 J				01
R238	**HF458150**	Carbon Resistor	150.0K 1/4 J				01
R239	**HF457100**	Carbon Resistor	10.0K 1/4 J				01
R240	**HF457560**	Carbon Resistor	56.0K 1/4 J				01
R241	**HF457100**	Carbon Resistor	10.0K 1/4 J				01
R242	**HF457100**	Carbon Resistor	10.0K 1/4 J				01
R243	**HF456220**	Carbon Resistor	2.2K 1/4 J				01
R244	**HF457100**	Carbon Resistor	10.0K 1/4 J				01
R245	**HF457150**	Carbon Resistor	15.0K 1/4 J				01
R246	**HF457220**	Carbon Resistor	22.0K 1/4 J				01
R247	**HF457100**	Carbon Resistor	10.0K 1/4 J				01
R248	**VV313600**	Flame Proof C. Resistor	2.2 1/4 J				01
R249	**VV313600**	Flame Proof C. Resistor	2.2 1/4 J				01
⚠ RY101	**VV315400**	Relay	DC OSA-SH-224DM3M				06

✻: New Parts

RANK: Japan only

⚠	REF NO.	PART NO.	DESCRIPTION			REMARKS	QTY	RANK
	RY102	VV315400	Relay	DC OSA-SH-224DM3M				06
*	SP1	V8181700	Receptacle	NL4MD-H				
*	SP2	V8181700	Receptacle	NL4MD-H				
*		AAX33190	Circuit Board	SMPS 1/2		J (V826930,X0627B0)		
*		AAX33200	Circuit Board	SMPS 1/2		U,V (V826940,X0627B0)		
*		AAX33210	Circuit Board	SMPS 1/2		H,B,W,K (V826950,X0627B0)		
*		AAX71680	Circuit Board	SMPS 1/2		A (X848520,X0627B0)		
*		AAX74520	Circuit Board	SMPS 2/2		J (V826930,X0627B0)		
*		AAX74530	Circuit Board	SMPS 2/2		U,V (V826940,X0627B0)		
*		AAX33230	Circuit Board	SMPS 2/2		H,B,W,K (V826950,X0627B0)		
*		AAX33250	Circuit Board	SMPS 2/2		A (V848520,X0627B0)		
		VQ074600	Bind Head Tapping Screw-B	3.0X12 MFZN2BL			8	01
		VV319600	Fuse Holder	CQ-05CT			8	01
		--	Heat Sink			(V850150)	3	
		--	Heat Sink			(V850210)		
		--	Jumper Wire	0.60		(VV29140)	16	01
		--	Jumper Wire	0.60 TP		(V829020)	8	
		--	Connector Assembly	SGND		(V842670)		
⚠	C101	VZ411400	Capacitor	0.22 275V UCS		J,U,V,A		01
⚠ *	C101	V9365100	Capacitor	1.00 275V UCS		H,B,W,K		
⚠	C102	VZ411400	Capacitor	0.22 275V UCS		J,U,V,A		01
⚠ *	C102	V9365100	Capacitor	1.00 275V UCS		H,B,W,K		
⚠	C103	V6113500	Capacitor	1000P 400V J.U.C.S				
⚠	-105	V6113500	Capacitor	1000P 400V J.U.C.S				
*	C106	V8499100	Electrolytic Cap.	2200 200V				
*	-109	V8499100	Electrolytic Cap.	2200 200V				
	C110	V5482000	Electrolytic Cap.	1000 35.0V				
	C111	UR847100	Electrolytic Cap.	10.00 25.0V				01
	C112	UR847100	Electrolytic Cap.	10.00 25.0V				01
	C113	UA953100	Mylar Capacitor	1000P 50V J				01
	C114	VZ354600	Monolithic Ceramic Cap.	0.10 50V Z				01
	C115	UR847100	Electrolytic Cap.	10.00 25.0V				01
	C116	UR866470	Electrolytic Cap.	4.70 50.0V				01
	C117	VV321100	Monolithic Mylar Capacitor	0.22 50V J				01
	C118	V9136100	Polypropylene Capacitor	1.2000 250V J		J		
	C118	V9135800	Polypropylene Capacitor	1.0000 250V J		U,V,H,W,B,A,K		
*	C119	V8763300	Electrolytic Cap.-PW	220 160.0V				
*	C120	V8763300	Electrolytic Cap.-PW	220 160.0V				
*	C121	V8500200	Electrolytic Cap.-PW	470 50.0V				
*	C122	V8500200	Electrolytic Cap.-PW	470 50.0V				
*	C123	V4881900	Electrolytic Cap.-PW	4.70 100.0V				01
*	C124	V4881900	Electrolytic Cap.-PW	4.70 100.0V				01
*	C125	V8500200	Electrolytic Cap.-PW	470 50.0V				
	C126	VZ354000	Ceramic Capacitor-F	0.0100 50V Z				01
*	C127	V8500200	Electrolytic Cap.-PW	470 50.0V				
*	C128	V8500200	Electrolytic Cap.-PW	470 50.0V				
	C129	V5868900	Mylar Capacitor	0.1 50V J				
	-131	V5868900	Mylar Capacitor	0.1 50V J				
*	C132	V8763300	Electrolytic Cap.-PW	220 160.0V				
*	C133	V8763300	Electrolytic Cap.-PW	220 160.0V				
	C136	UR847220	Electrolytic Cap.	22.00 25.0V				01
	C137	V6113500	Capacitor	1000P 400V J.U.C.S				
	C138	V6113500	Capacitor	1000P 400V J.U.C.S				
	C139	VZ354600	Monolithic Ceramic Cap.	0.10 50V Z				01
⚠	CN101	V5817000	AC Inlet	HF-301L				
	CN102	LB932020	Base Post Connector	VH- 2P TE				01
	CN103	LB932030	Base Post Connector	VH- 3P TE				01
*	CN104	V3764800	Connector Base Post	M24185XX 10P TE				
	D101	VU801600	Diode	1N4004L 26				01
⚠	D102	VR149900	Diode Stack	D25XB60 25.0A 600V				06
	D103	VU801600	Diode	1N4004L 26				01
	D104	VQ308300	Diode	D1NL40				02
	D105	VU801600	Diode	1N4004L 26				01
	D106	VN399500		FMU-36S 20.0A 600V				05
*	D107	V8498700	Diode	FMU-36R 20.0A 600V				04
	D108	VN478200	Diode	D1NL20U				01
	-114	VN478200	Diode	D1NL20U				01
	D115	VG440800	Zener Diode	MTZ J 15.0B 15.0V				01
	D116	VD631600	Diode	1SS133,176,HSS104				01

✻: New Parts

RANK: Japan only

	REF NO.	PART NO.	DESCRIPTION			REMARKS	QTY	RANK
	D117	**VG438900**	Zener Diode	MTZ J 8.2B 8.2V				01
	D118	**VD631600**	Diode	1SS133,176,HSS104				01
	D119	**VD631600**	Diode	1SS133,176,HSS104				01
	D120	**VD631600**	Diode	1SS133,176,HSS104		H,B,W,K		01
	D121	**VD631600**	Diode	1SS133,176,HSS104		H,B,W,K		01
⚠	F101	**VE876300**	Fuse	20.00A J		J		02
⚠	F101	**KB001380**	Fuse	15.00A U		U,V		04
⚠	F101	**KB003360**	Fuse	6.30A S		H,B,W,A,K		02
⚠	F102	**VV070600**	Fuse	TDS 2A 250V J/U/C		J,U,V		01
⚠	F102	**VV071500**	Fuse	TSD 2A 250V SEMKO		H,B,W,A,K		01
⚠	F103	**VV070600**	Fuse	TDS 2A 250V J/U/C		J,U,V		01
⚠	F103	**VV071500**	Fuse	TSD 2A 250V SEMKO		H,B,W,A,K		01
⚠	F104	**VV070600**	Fuse	TDS 2A 250V J/U/C		J,U,V		01
⚠	F104	**VV071500**	Fuse	TSD 2A 250V SEMKO		H,B,W,A,K		01
⚠	IC101	**XD853A00**	IC	NJM7815FA		REGULATOR +15V		03
*	IC102	**X2264A00**	IC			CONTROL IR2153		
	J103	**VV291400**	Jumper Wire	0.60		J,U,V		01
*	PH101	**V8100500**	Photo Coupler	TLP421 GR				
	PR101	**VL965100**	Positive Thermistor	PTH9M04BE222TS2				04
	PR102	**VL964800**	Positive Thermistor	PTH9M04BH222TS2				04
*	Q101	**V8101000**	Transistor	2SC2655 O,Y				
	Q102	**VI242900**	Transistor	2SA1020-Y(TPE6) Y				01
*	Q103	**V8234000**	Transistor	1MBK50D 600V				
*	Q104	**V8101000**	Transistor	2SC2655 O,Y				
	Q105	**VI242900**	Transistor	2SA1020-Y(TPE6) Y				01
*	Q106	**V8234000**	Transistor	1MBK50D 600V				
	Q107	**V2797700**	Transistor	2SC5395 E,F				01
	Q108	**V2797600**	Transistor	2SA1993 E,F				01
	Q109	**V2797600**	Transistor	2SA1993 E,F				01
	Q110	**V2797700**	Transistor	2SC5395 E,F				01
	Q111	**V2797700**	Transistor	2SC5395 E,F				01
	Q112	**V2797600**	Transistor	2SA1993 E,F				01
	Q113	**V2797700**	Transistor	2SC5395 E,F				01
	Q114	**V2797700**	Transistor	2SC5395 E,F				01
	Q115	**VS883400**	Transistor	2SD2394 E,F				02
	Q116	**V2797600**	Transistor	2SA1993 E,F				01
	R101	**VN067400**	Wire Wound Resistor	6.8 5W K				03
*	R102	**V9138300**	Metal Oxide Film Resistor	10K 3W J				
*	-105	**V9138300**	Metal Oxide Film Resistor	10K 3W J				
	R106	**VZ009100**	Flame Proof C. Resistor	33.0 1/4 J				01
	R107	**HF457100**	Carbon Resistor	10.0K 1/4 J				01
	R108	**HF457220**	Carbon Resistor	22.0K 1/4 J				01
	R109	**HF458120**	Carbon Resistor	120.0K 1/4 J				01
	R110	**HF457220**	Carbon Resistor	22.0K 1/4 J				01
	R111	**HF457220**	Carbon Resistor	22.0K 1/4 J				01
	R112	**HF457100**	Carbon Resistor	10.0K 1/4 J				01
	R113	**HF457100**	Carbon Resistor	10.0K 1/4 J				01
	R114	**HF457220**	Carbon Resistor	22.0K 1/4 J				01
	R115	**HF457470**	Carbon Resistor	47.0K 1/4 J				01
	R116	**HF459100**	Carbon Resistor	1.0M 1/4 J				01
	R117	**VV058500**	Flame Proof C. Resistor	10.0 1/4 J		J,U,V,A		01
	R117	**VZ009100**	Flame Proof C. Resistor	33.0 1/4 J		H,B,W,K		01
	R118	**VV058500**	Flame Proof C. Resistor	10.0 1/4 J		J,U,V,A		01
	R118	**VZ009100**	Flame Proof C. Resistor	33.0 1/4 J		H,B,W,K		01
	R119	**VZ370200**	Wire Wound Resistor	0.1 5W K				01
	R120	**VZ370200**	Wire Wound Resistor	0.1 5W K				01
	R121	**HF456330**	Carbon Resistor	3.3K 1/4 J				01
	R123	**HF456820**	Carbon Resistor	8.2K 1/4 J				01
	R124	**HF456560**	Carbon Resistor	5.6K 1/4 J				01
	R125	**HF456820**	Carbon Resistor	8.2K 1/4 J				01
	R126	**HF456820**	Carbon Resistor	8.2K 1/4 J				01
	R127	**HF455330**	Carbon Resistor	330.0 1/4 J				01
	R128	**HF455100**	Carbon Resistor	100.0 1/4 J				01
	R129	**HF457100**	Carbon Resistor	10.0K 1/4 J				01
	R130	**HF457100**	Carbon Resistor	10.0K 1/4 J				01
	R133	**HF456470**	Carbon Resistor	4.7K 1/4 J				01
	R134	**VN067400**	Wire Wound Resistor	6.8 5W K				03
	R135	**HF457220**	Carbon Resistor	22.0K 1/4 J				01
	R136	**HF457330**	Carbon Resistor	33.0K 1/4 J				01
	R137	**VV557800**	Flame Proof C. Resistor	1.0 1/4 J				01

*: New Parts

RANK: Japan only

	REF NO.	PART NO.	DESCRIPTION			REMARKS	QTY	RANK
⚠	RY101	**VZ003600**	Relay	DC OSZ-SS-124DM8				05
⚠ *	SW101	**V9268000**	Push Switch	SY17-2-2(U1D1) UCS		POWER ON/OFF		
⚠	T101	**XY592A00**	Power Transformer	A		J		06
⚠	T101	**XY593A00**	Power Transformer	UL		U,V		06
⚠	T101	**XY594A00**	Power Transformer	CE A		H,B,W,A,K		06
⚠ *	T102	**V8498800**	Coil	SC-10-10J		J,U,V		
⚠ *	T102	**V9382800**	Coil	RCV2505-050PF05		H,B,W,K		
⚠ *	T102	**V8498900**	Coil	SC-05-20J		A		
⚠ *	T103	**V8498800**	Coil	SC-10-10J		J,U,V		
⚠ *	T103	**V9382800**	Coil	RCV2505-050PF05		H,B,W,K		
⚠ *	T103	**V8498900**	Coil	SC-05-20J		A		
⚠ *	T104	**X0343A00**	Power Transformer			J		
⚠ *	T104	**X0344A00**	Power Transformer			U,V		
⚠ *	T104	**X0345A00**	Power Transformer	CE A CLASS2		H,B,W,K		
⚠ *	T104	**X0346A00**	Power Transformer	AS A CLASS2		A		
*	W101	**V8501700**	Connector Assembly	B&C #18 3P		J,U,V,A		
*	W101	**V9357200**	Connector Assembly	B&C #18 3P		H,B,W,K		
*	W102	**V8501600**	Connector Assembly	B&C #18 3P		J,U,V,A		
*	W102	**V9261400**	Connector Assembly	B&C #18 3P		H,B,W,K		
⚠		**V7240300**	AC Cord	J VCTF 0.75X3		J		
⚠		**V6284300**	AC Cord	UC SJT#18X3		U,V		05
⚠		**V6284400**	AC Cord	E H05VV-FX3 0.75		H,W,A,K		06
⚠		**V6283900**	AC Cord	BS H05VV-F3X0.75		B		08
		V6024100	Fan	3110GL-B5W-B50-H01				08
*		**V8291500**	Coil	EI 3MH				

✻: New Parts

RANK: Japan only

■ CIRCUIT DIAGRAMS

■ CONTENTS

CIRCUIT DIAGRAM 1/9 (IN8/IN16 1/2) C1
CIRCUIT DIAGRAM 2/9 (IN8/IN16 2/2) C2
CIRCUIT DIAGRAM 3/9 (MAS 1/4) C3
CIRCUIT DIAGRAM 4/9 (MAS 2/4) C4
CIRCUIT DIAGRAM 5/9 (MAS 3/4) C5
CIRCUIT DIAGRAM 6/9 (MAS 4/4) C6
CIRCUIT DIAGRAM 7/9 (DSP-SPX) C7
CIRCUIT DIAGRAM 8/9 (SMPS 1/2, SMPS 2/2) C8
CIRCUIT DIAGRAM 9/9 (PWR) C9

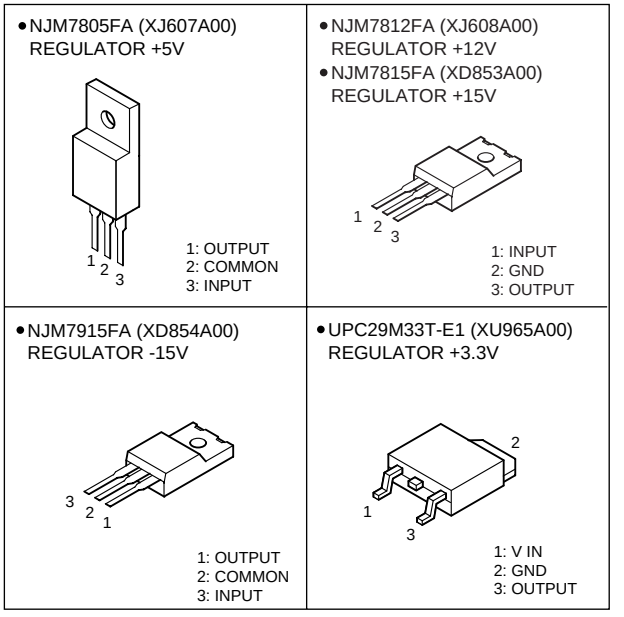

(マイカ) : Myca Capacitor
（セ）: Ceramic Capacitor
（マ）: Mylar Capacitor
（F）: Metal Film Resistor
（金被）: Metal Film Resistor
規格認定コン : Capacitor
（フ）: Electrolytic Capacitor
酸金 : Oxide Film Resistor
（FP）: Flame Proof C.Resistor
セメント抵抗 : Wire Wound Resistor

Note : See parts list for details of circuit board component parts.

■EMX5000-12/20 CIRCUIT DIAGRAM 1/9 (IN8/IN16 1/2)

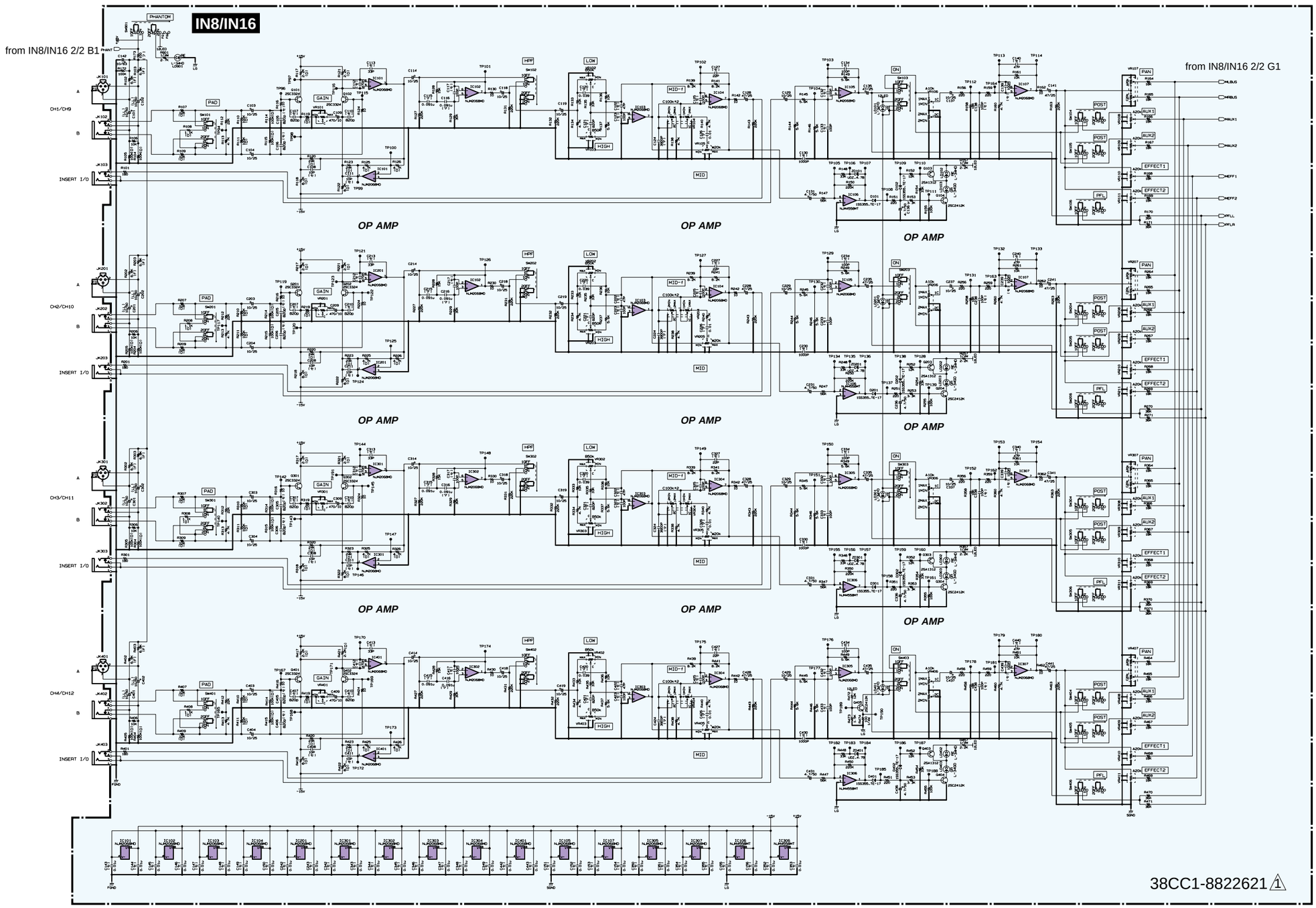

■EMX5000-12/20 CIRCUIT DIAGRAM 2/9 (IN8/IN16 2/2)

from IN8/IN16 1/2 B1

IN8/IN16

from IN8/IN16 1/2 G1

IN16 only

to MAS 3/4-CN603

to MAS 4/4-CN604

OP AMP

OP AMP

OP AMP

OP AMP

OP AMP

OP AMP

38CC1-8822621 ⚠1

EMX5000-12/20

■EMX5000-12/20 CIRCUIT DIAGRAM 3/9 (MAS 1/4)

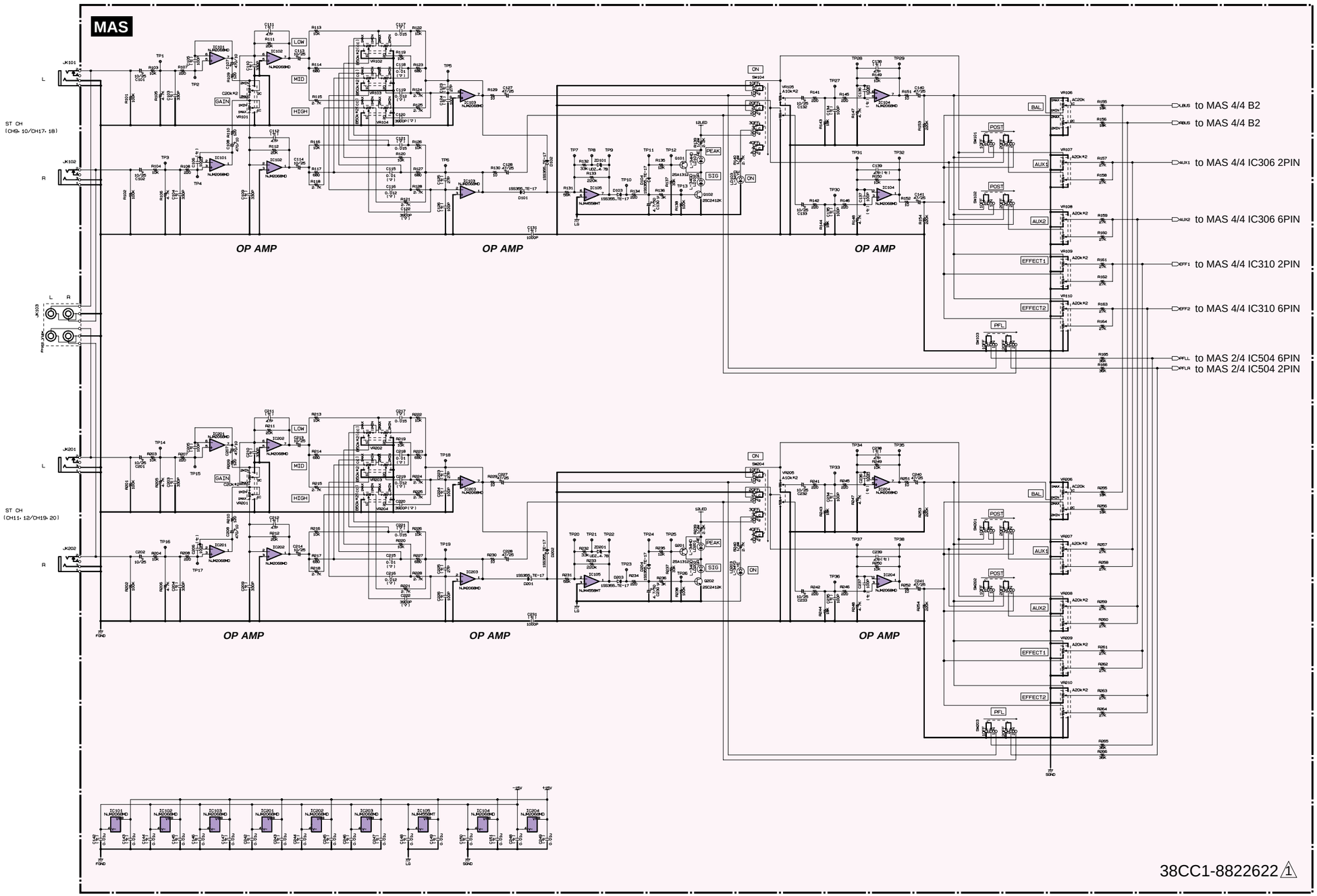

■EMX5000-12/20 CIRCUIT DIAGRAM 4/9 (MAS 2/4)

MAS

OP AMP

ST SUB IN 1

ST SUB IN 2

from MAS 4/4 D1

from MAS 4/4 D2

to MAS 4/4 B2

to MAS 4/4 B2

to MAS 4/4 IC306 2PIN

to MAS 4/4 IC306 6PIN

from DSP-SPX-CN101

to MAS 4/4 D4

to MAS 4/4 D5

from MAS 3/4 G3

from MAS 1/4 G3

from MAS 3/4 CN603

from MAS 4/4 F3

to MAS 4/4 C1

38CC1-8822622 ⚠1

EMX5000-12/20

■EMX5000-12/20 CIRCUIT DIAGRAM 5/9 (MAS 3/4)

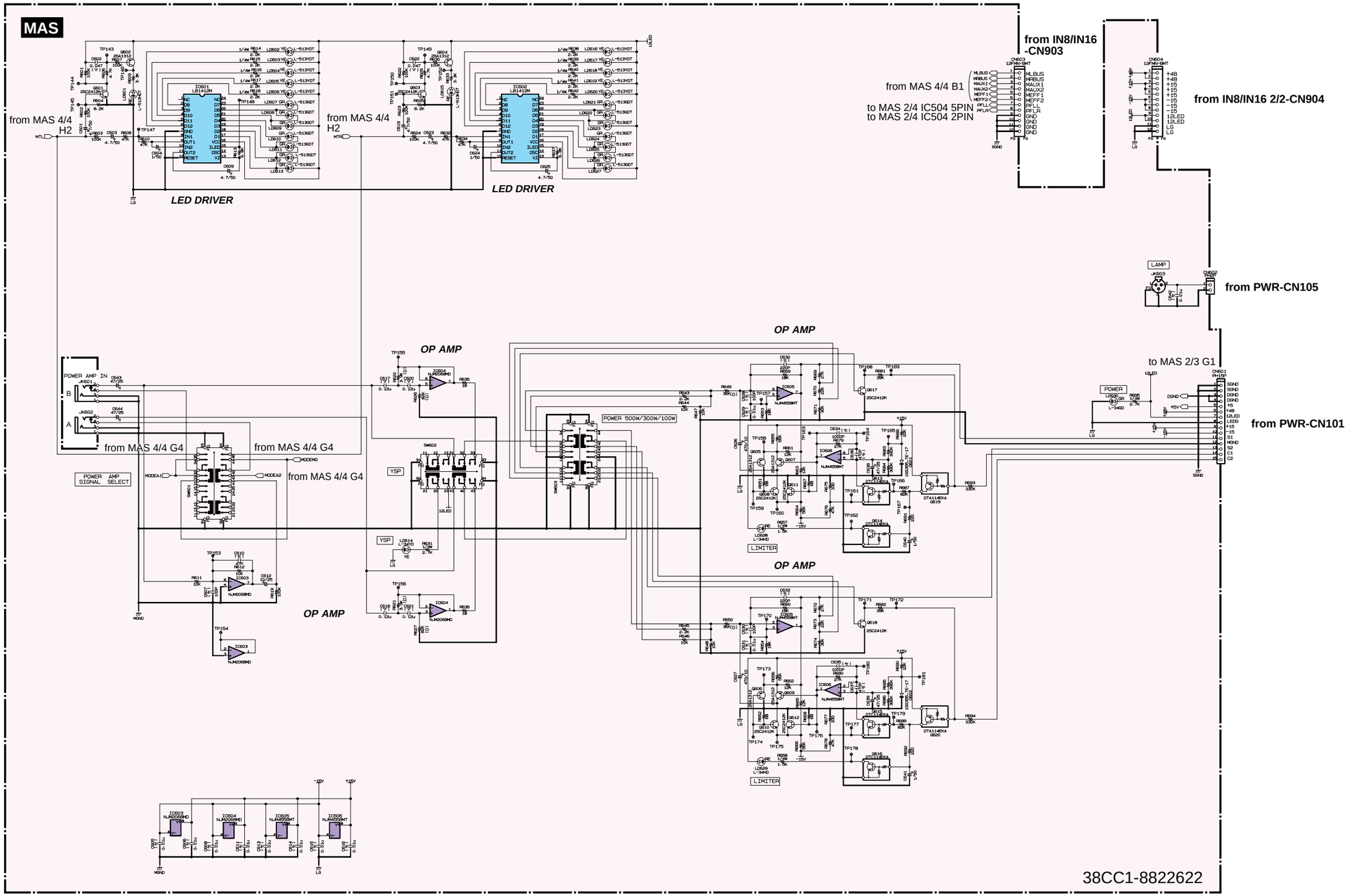

■EMX5000-12/20 CIRCUIT DIAGRAM 6/9 (MAS 4/4)

MAS

from MAS 3/4 F2 CN603

from MAS 2/4 D3

to MAS 2/4 A3

to MAS 2/4 A3

from MAS 1/4 G2

from MAS 2/4 D1

from MAS 1/4 G2

from MAS 2/4 D1

from MAS 1/4 G2

from MAS 2/4 D2

from MAS 1/4 G2

from MAS 2/4 D2

from MAS 1/4 H2

from MAS 1/4 H3

LED DRIVER

MAIN GEQ

to MAS 2/4 E3

IC504 6PIN

IC504 2PIN E3

from MAS 2/4 E1

from MAS 2/4 E2

to MAS 3/4 B2

to MAS 3/4 C2

to MAS 3/4 C3

to MAS 3/4 B3

to MAS 3/4 C3

38CC1-8822622 2

EMX5000-12/20

■EMX5000-12/20 CIRCUIT DIAGRAM 7/9 (DSP-SPX)

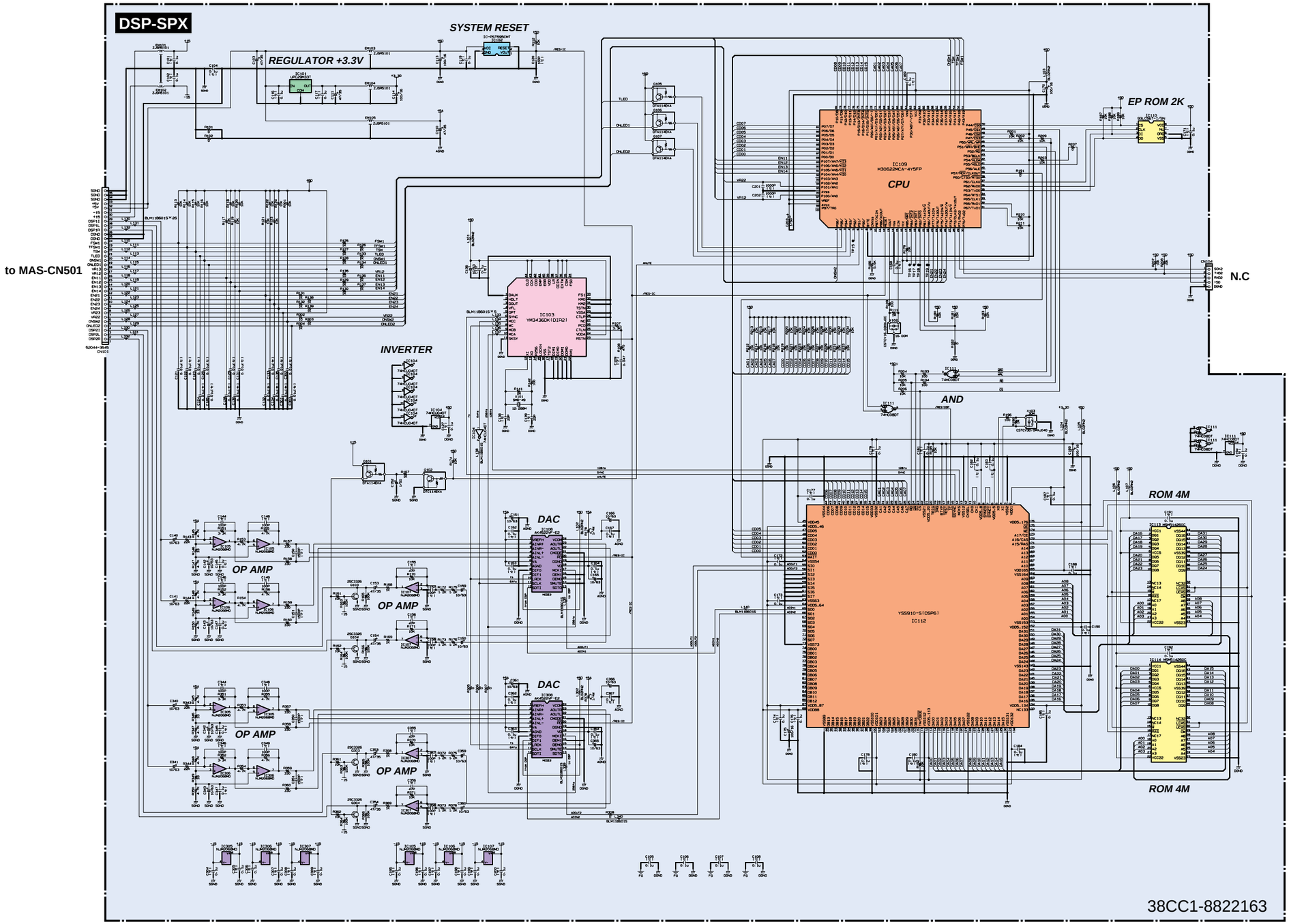

■EMX5000-12/20 CIRCUIT DIAGRAM 8/9 (SMPS 1/2, SMPS 2/2)

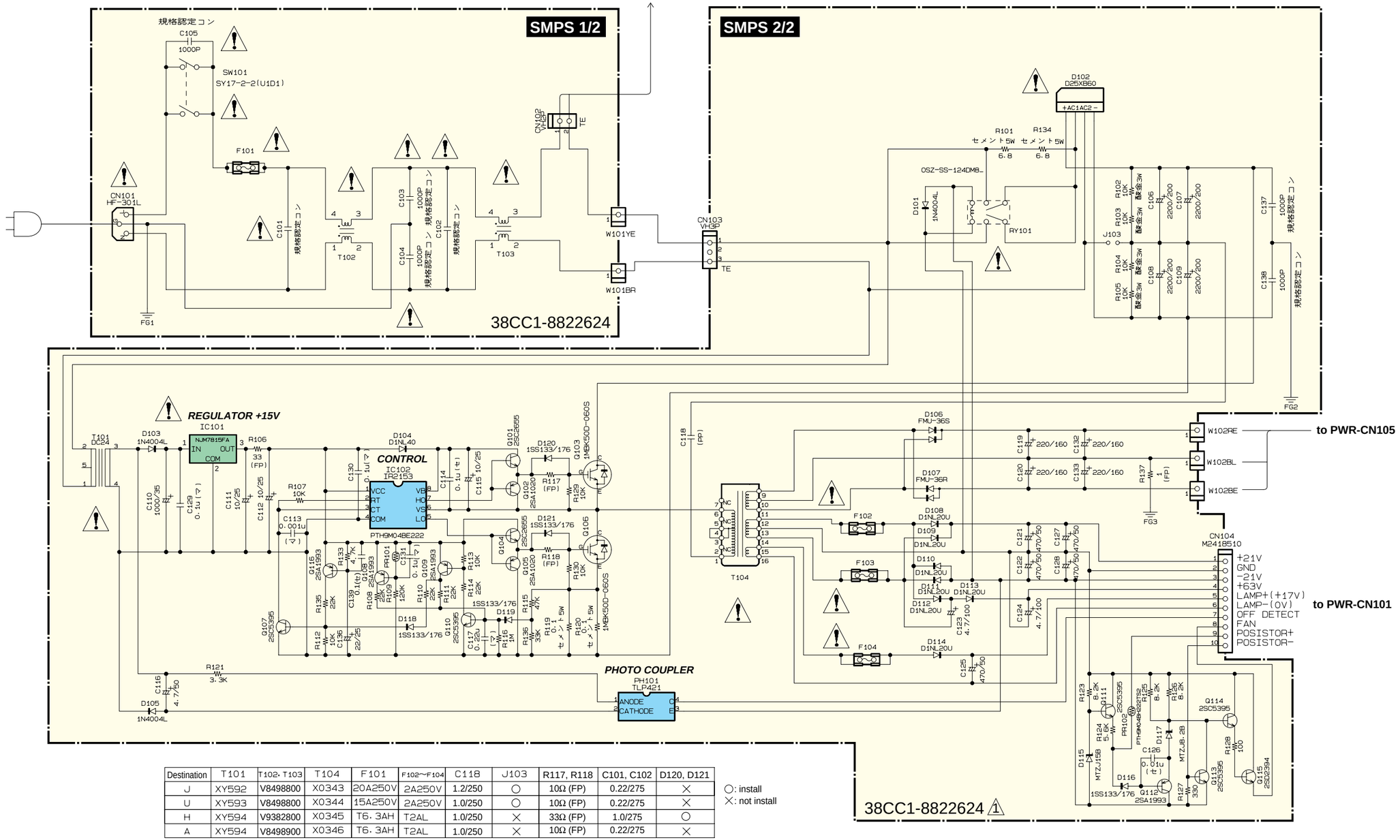

Destination	T101	T102・T103	T104	F101	F102～F104	C118	J103	R117, R118	C101, C102	D120, D121
J	XY592	V8498800	X0343	20A250V	2A250V	1.2/250	○	10Ω (FP)	0.22/275	×
U	XY593	V8498800	X0344	15A250V	2A250V	1.0/250	○	10Ω (FP)	0.22/275	×
H	XY594	V9382800	X0345	T6.3AH	T2AL	1.0/250	×	33Ω (FP)	1.0/275	○
A	XY594	V8498900	X0346	T6.3AH	T2AL	1.0/250	×	10Ω (FP)	0.22/275	×

○: install
×: not install

⚠ 印 : Special characteristic

■EMX5000-12/20 CIRCUIT DIAGRAM 9/9 (PWR)

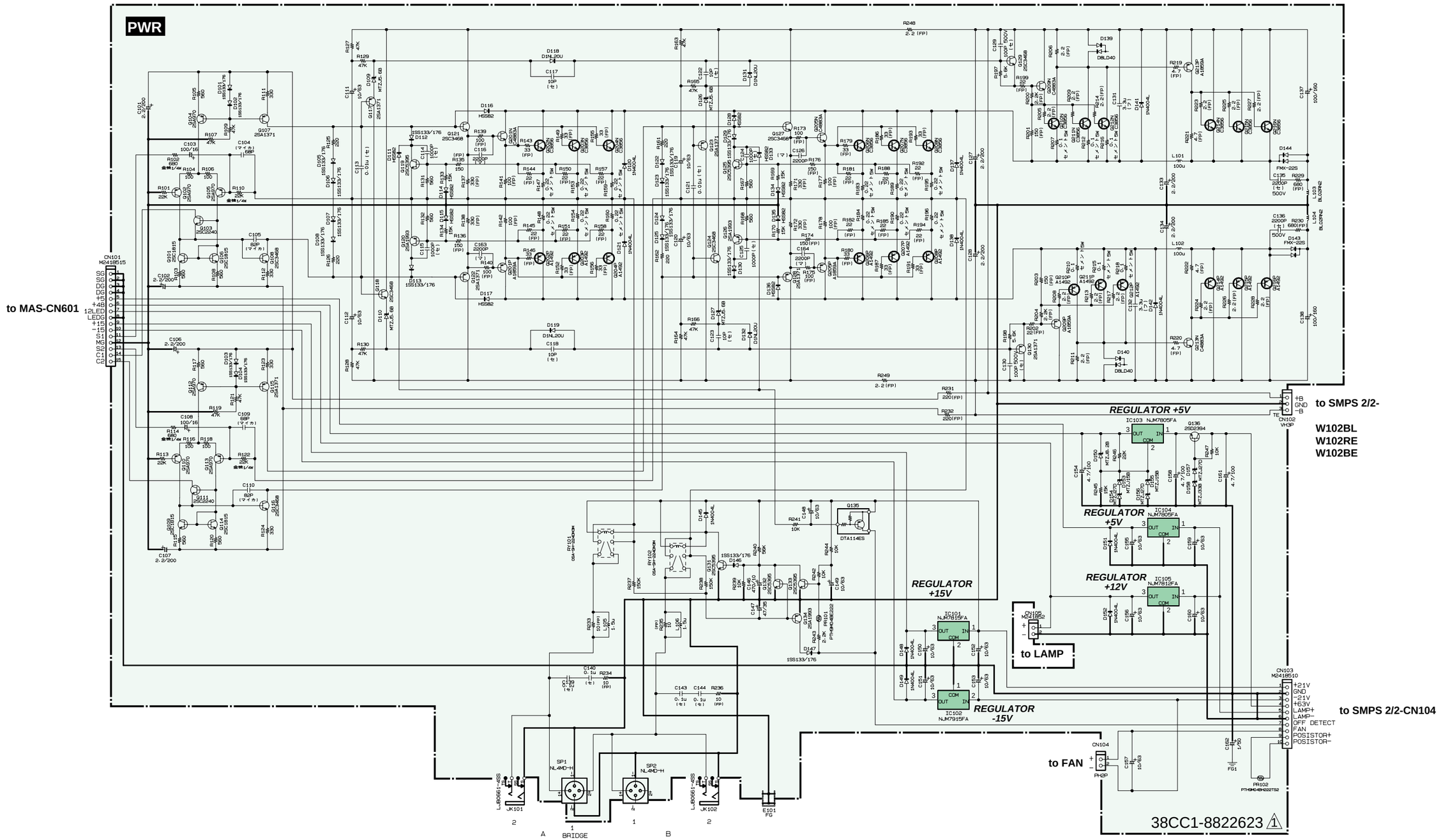

EMX5000-12/20

EMX5000-12/20 C9