YAMAHA Electone®

EL-100

SERVICE MANUAL



■ **CONTENTS**

SPECIFICATIONS ····· **3**
PANEL LAYOUT ····· **5**
CIRCUIT BOARD LAYOUT ····· **8**
DISASSEMBLY PROCEDURE ····· **9**
LSI PIN DESCRIPTION ····· **21**
IC BLOCK DIAGRAM ····· **26**
CIRCUIT BOARDS ····· **27**
MESSAGES ON THE M.D.R. DISPLAY ····· **45**
SELF CHECK MODE ····· **46**
MIDI IMPLEMENTATION CHART ····· **51**
MIDI DATA FORMAT ····· **53**
PARTS LIST
BLOCK DIAGRAM
WIRING
OVERALL CIRCUIT DIAGRAM

This document is printed on chlorine free (ECF) paper with soy ink.

EL **001673**
20020401-200000

YAMAHA
HAMAMATSU, JAPAN
0.779K-3543 ℳ **Printed in Japan '02.03**

IMPORTANT NOTICE

This manual has been provided for the use of authorized Yamaha Retailers and their service personnel. It has been assumed that basic service procedures inherent to the industry, and more specifically Yamaha Products, are already known and understood by the users, and have therefore not been restated.

WARNING: Failure to follow appropriate service and safety procedures when servicing this product may result in personal injury, destruction of expensive components and failure of the product to perform as specified. For these reasons, we advise all Yamaha product owners that all service required should be performed by an authorized Yamaha Retailer or the appointed service representative.

IMPORTANT: This presentation or sale of this manual to any individual or firm does not constitute authorization, certification, recognition of any applicable technical capabilities, or establish a principal-agent relationship of any form.

The data provided is belived to be accurate and applicable to the unit(s) indicated on the cover. The research engineering, and service departments of Yamaha are continually striving to improve Yamaha products. Modifications are, therefore, inevitable and changes in specification are subject to change without notice or obligation to retrofit. Should any discrepancy appear to exist, please contact the distributor's Service Division.

WARNING: Static discharges can destroy expensive components. Discharge any static electricity your body may have accumulated by grounding yourself to the ground bus in the unit (heavy gauge black wires connect to this bus).

IMPORTANT: Turn the unit OFF during disassembly and parts replacement. Recheck all work before you apply power to the unit.

WARNING: CHEMICAL CONTENT NOTICE!

The solder used in the production of this product contains LEAD. In addition, other electrical/electronic and/or plastic (where applicable) components may also contain traces of chemicals found by the California Health and Welfare Agency (and possibly other entities) to cause cancer and/or birth defects or other reproductive harm.

DO NOT PLACE SOLDER, ELECTRICAL/ELECTRONIC OR PLASTIC COMPONENTS IN YOUR MOUTH FOR ANY REASON WHAT SO EVER!

Avoid prolonged, unprotected contact between solder and your skin! When soldering, do not inhale solder fumes or expose eyes to solder/flux vapor!

If you come in contact with solder or components located inside the enclosure of this product, wash your hands before handling food.

WARNING

Components having special characteristics are marked ⚠ and must be replaced with parts having specification equal to those originally installed.

IMPORTANT NOTICE FOR THE UNITED KINGDOM

Connecting the Plug and Cord

IMPORTANT. The wires in this main lead are coloured in accordance with the following code:

BLUE: NEUTRAL
BROWN: LIVE

As the colours of the wires in the main lead of this apparatus may not correspond with the coloured markings identifying the terminals in your plug, proceed as follows:

The BLUE wire must be connected to the terminal that is marked with the letter N (or coloured BLACK).

The BROWN wire must be connected to the terminal that is marked with the letter L (or coloured RED).

Be certain that neither core is connected to the earth terminal of the three pin plug.

■ SPECIFICATIONS

KEYBOARD		Upper: 49 keys (C – C), Lower: 49 keys (C – C), Pedal: 20 keys (C – G)
Initial Touch		Upper 1, 2, Lead, Lower 1, 2, Pedal 1, 2 (Available only when it is played by external MIDI control)
VOICE	**Tone Generation**	AWM
	Upper Keyboard Voice **Lower Keyboard Voice** **Upper Keyboard Voice 2** **Lower Keyboard Voice 2**	Strings 1, 2, 3, 4, 5, 6, 7, Pizz. Strings, Tremolo Strings, Synth. Strings 1, 2, 3; Brass 1, 2, 3, 4, 5, Synth. Brass 1, 2, 3; Clarinet 1, 2, Bass Clarinet, Synth. Clarinet 1, 2; Saxophone 1, 2, Soprano Sax., Sax. Ensemble 1, 2, Synth. Sax, Synth. Lead 1, 2, 3, 4, 5; Chorus 1, 2, 3, 4, 5, Vocal; Organ 1, 2, 3, 4, Jazz Organ 1, 2, 3, 4, Pop Organ 1, 2, Theatre Organ 1, 2, Accordion, Bandoneon; Piano 1, 2, Honky Tonk, Elec. Piano 1, 2, 3, Harpsichord, Clavi., Clavichord; Guitar 1, 2, 3, 12 String Guitar, Banjo, Mandolin, Sitar, Shamisen, Elec. Guitar 1, 2, Muted Guitar, Distortion Guitar, Harp, Steel Guitar, Koto, Taisho Koto; Vibraphone, Glockenspiel, Celesta, Music Box, Marimba, Xylophone, Chime, Synth. Chime, Steel Drum; Cosmic 1, 2, 3, 4, 5, 6, 7, 8, 9, 10, 11, 12, 13, 14, 15, 16; Tutti 1, 2, 3, 4, 5, 6, 7; [Upper] Harmonica 1, 2; [Lower] Horn 1, 2, 3, 4, Muted Horn; 2 Dotted Buttons; [Upper] 115 Voices; [Lower] 118 Voices; Volume Fine
	Lead Voice	Violin 1, 2, 3, 4, 5, Pizz. Violin, Cello, Kokyu; Flute 1, 2, Piccolo, Yokobue, Recorder, Ocarina, Pan Flute, Shakuhachi, Whistle; Oboe 1, 2, English Horn, Bassoon 1, 2; Trumpet 1, 2, 3, 4, 5, 6, Muted Trumpet, Trombone 1, 2, Muted Trombone, Flugel Horn, Euphonium; To Lower; Dotted Button; 34 Voices; Volume Fine
	Pedalboard Voice **Pedalboard Voice 2**	Contrabass 1, 2, 3, Pizz. Bass, Upright Bass; Elec. Bass 1, 2, 3, 4, Synth. Bass 1, 2, 3; Organ Bass 1, 2, 3, 4; Tuba, Timpani, Timpani Roll; To Lower; Dotted Button; 19 Voices; Volume Fine
	Voice Display	Upper 1, 2; Lower 1, 2; Lead; Pedal 1, 2; Manual Balance
EFFECT/ CONDITION	**Digital Reverb**	3 Types: Room, Hall, Church; Length; Depth; Volume: Upper 1, 2, Lower 1, 2, Lead, Pedal 1, 2, Accompaniment, Percussion
	Sustain	Upper, Lower, Pedal: Length
	Tremolo/Chorus	Upper 1, 2, Lower 1, 2, Lead, Pedal 1, 2, Tremolo (Fast): Speed; Chorus: Slow, Stop
	Symphonic/Celeste	Upper 1, 2, Lower 1, 2, Lead, Pedal 1, 2; Mode: Symphonic/Celeste
	Vibrato	Upper 1, 2, Lower 1, 2, Lead, Pedal 1, 2: Preset/User (Delay, Depth, Speed)
	Delay	Upper 1, 2, Lower 1, 2, Lead, Pedal 1, 2; Control: Time, Feedback, Balance; Mode: Mono, Stereo 1, 2, 3
	Flanger	Upper 1, 2, Lower 1, 2, Lead, Pedal 1, 2; Control: Speed, Feedback, Depth
	Distortion	Upper 1, 2, Lower 1, 2, Lead, Pedal 1, 2; Control: Level, Hi-pass
	Glide	Upper 1, 2, Lower 1, 2, Lead; Control: Time
	Lead Slide	On/Off; Control: Time
	Lead Tune	Tune Control
	Panning	Upper 1, 2, Lower 1, 2, Lead, Pedal 1, 2; (7 positions)
	Feet	Upper 1, 2, Lower 1, 2, Lead, Pedal 1, 2; Preset 2' (Pedal Voices only)/4'/8'/16'
RHYTHM	**Rhythms**	March 1, 2, 3, Polka 1, 2, Country 1, 2, Broadway, Baroque; Waltz 1, 2, 3, 4, 5, Jazz Waltz 1, 2, 3, Bolero; Swing 1, 2, 3, 4, 5, 6, Jazz Ballad, Dixieland 1, 2; Bounce 1, 2, 3, Reggae 1, 2; Slow Rock 1, 2, 3; Tango 1, 2, 3; Chacha, Rhumba, Beguine; Mambo, Salsa, Samba 1, 2, 3, Bossanova 1, 2, 3; 8Beat 1, 2, 3, 4, 5, Dance Pop 1, 2, 3, 4; 16Beat 1, 2, 3, 4, 5, Funk 1, 2, 3; User 1-8 (A-D); 2 Dotted Buttons; 66 Rhythms; Volume Fine
	Variations	Fill-In; Intro. Ending; Lead In; Auto Variation: On/Off
	Others	Start; Synchro Start; Tempo; Bar/Beat LED; Condition: Reverb, Balance, Volume
	Rhythm Sequence	On/Off, Sequence 1 - 4
KEYBOARD PERCUSSION		Lower, Pedal On/Off: Lower Preset, Pedal Preset, User 1- 8; Copy: LK Preset, PK Preset, User; Assign: 120 Instruments, Clear
ACCOMPANIMENT	**Auto Bass Chord**	Mode: Off; Single Finger; Fingered Chord; Custom A.B.C.; Memory: Lower, Pedal
	Accompaniments	Type 1, 2, 3, 4, All Off, Volume, Reverb
MELODY ON CHORD		Mode: Off, 1, 2, 3
BASIC REGISTRATION		1 - 5
REGISTRATION MEMORY		M./To Disk, 1 - 8; Disable Button; Registration shift
MUSIC DISK RECORDER		Play/Record: Upper, Lower, Pedal, Lead, Keyboard Percussion, Control; Pause, Stop, Fast Forward/ Reverse, Song Select, Shift, Custom Play, Tempo; Format, Read & Auto Increment, Song Repeat; Song Delete; Song Copy: From/To; Disk Copy, Punch in Recording, XG Song Playback, XG Easy Converter, Song Name, Pattern Disk, Remaining Memory; LED Display; Eject

FOOT SWITCH	**Left**	Mode: Off; Rhythm (Stop, Ending, Fill-In); Glide (Upper 1, 2/Lower 1, 2/Lead; Time); Tremolo/Chorus
	Right	Regist. Shift Mode: Off, Shift, Jump, User (80 Positions; Cursor Controls: Data: Insert, Delete; Shift End: Stop, Top, Next Song)
TRANSPOSE/PITCH		Transpose: -6 - +6; Pitch: 438.8Hz - 444.5Hz
LCD DISPLAY		20 x 2 Character
LANGUAGE		English, Japanese
OTHER CONTROLS		Power On/Off; Exp. Pedal (Right/Left Footswitches); Pitch Control; Transpose; Master Volume; Display Select; Data Controls; Page; MIDI (Output: Upper, Lower, Pedal; Int./Ext.: Lead, Sync., Exp.)
OTHER FITTINGS		Dust Cover; Music Stand; Bench; Headphone Jack; Aux In/Out (RCA; R/L); MIDI In/Out; To Host; Host Select
OPTIONAL ACCESSORIES		Pattern Disk; HPE-170 Headphones; 3.5" Floppy Disks
SOUND SYSTEM	**Power Amplifiers**	40W (Stereo)
	Speakers	16cm x 2; 5cm x 2
DIMENSIONS (W x D x H)		112.3cm x 48.2cm x 92.5cm (111.1cm with Music Stand) [Bench] 59.5cm x 29.5cm x 58.0cm
WEIGHT		55.0kg [Bench] 6.2kg
OUTPUT LEVEL		AUX OUT L/R (load 10 kΩ): -20.0 dBm HP L/R (load 33 Ω): -10.0 dBm

* Apply a 1 kHz sine wave. Tolerance is +/-2 dB.

■ PANEL LAYOUT

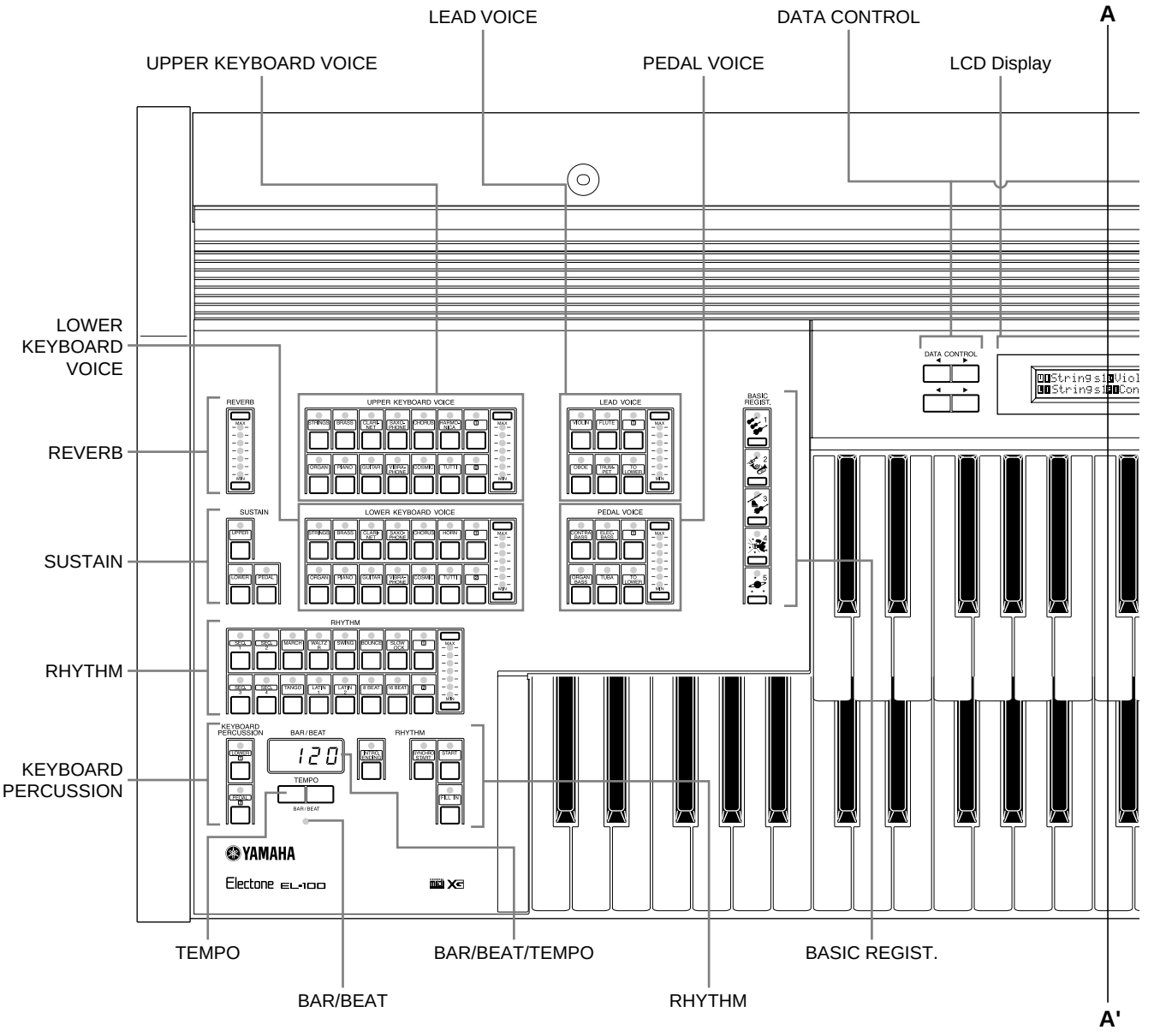

● Accessory Jacks and Panel Controls

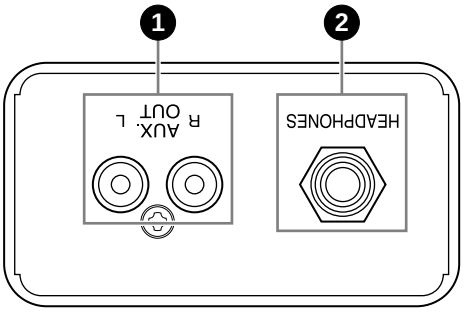

1 AUX. OUT (RCA, L/R) Jacks
2 HEADPHONES (Phone) jack

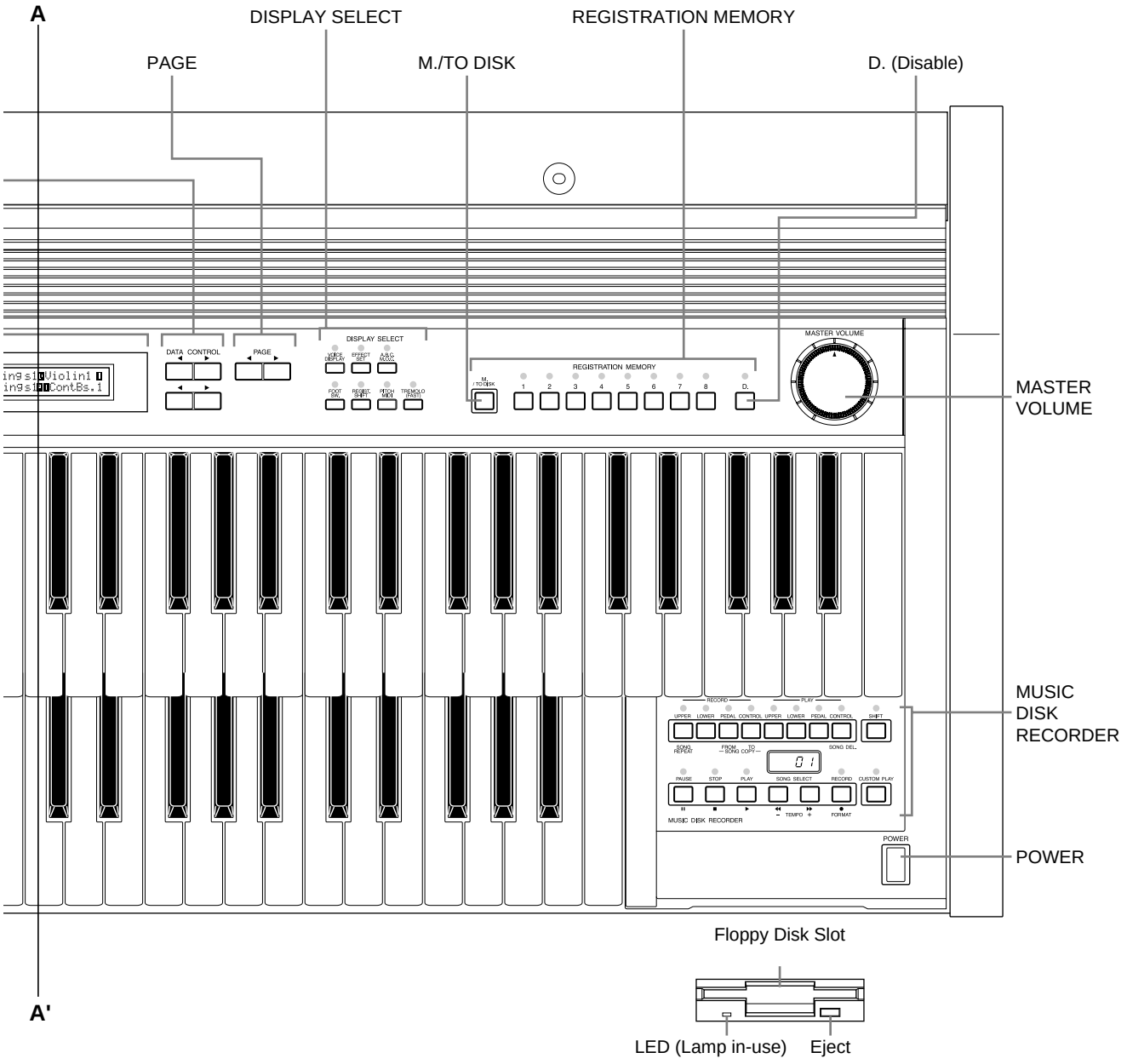

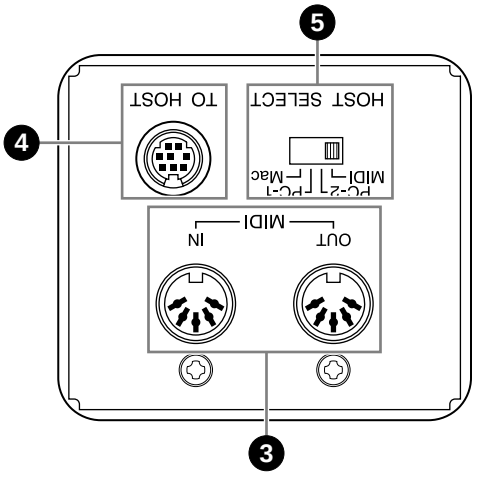

3 MIDI IN/OUT Terminals
4 TO HOST Terminal
5 HOST SELECT Switch

- LCD Display/Display Select

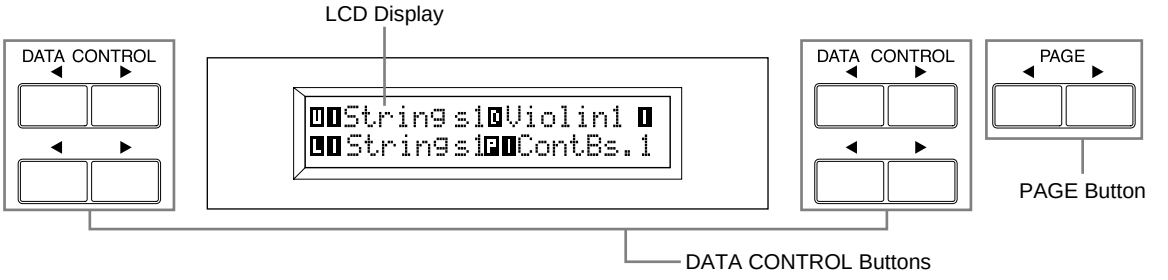

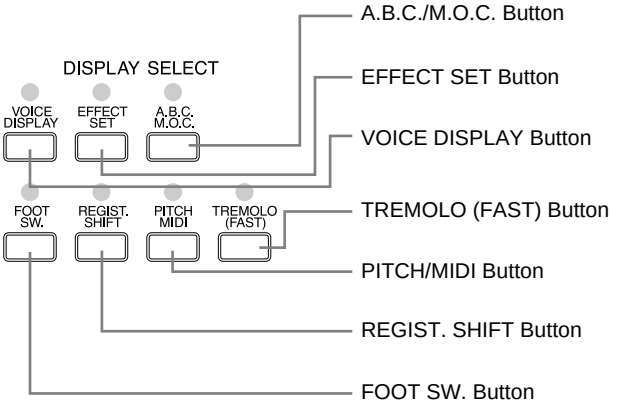

- Other

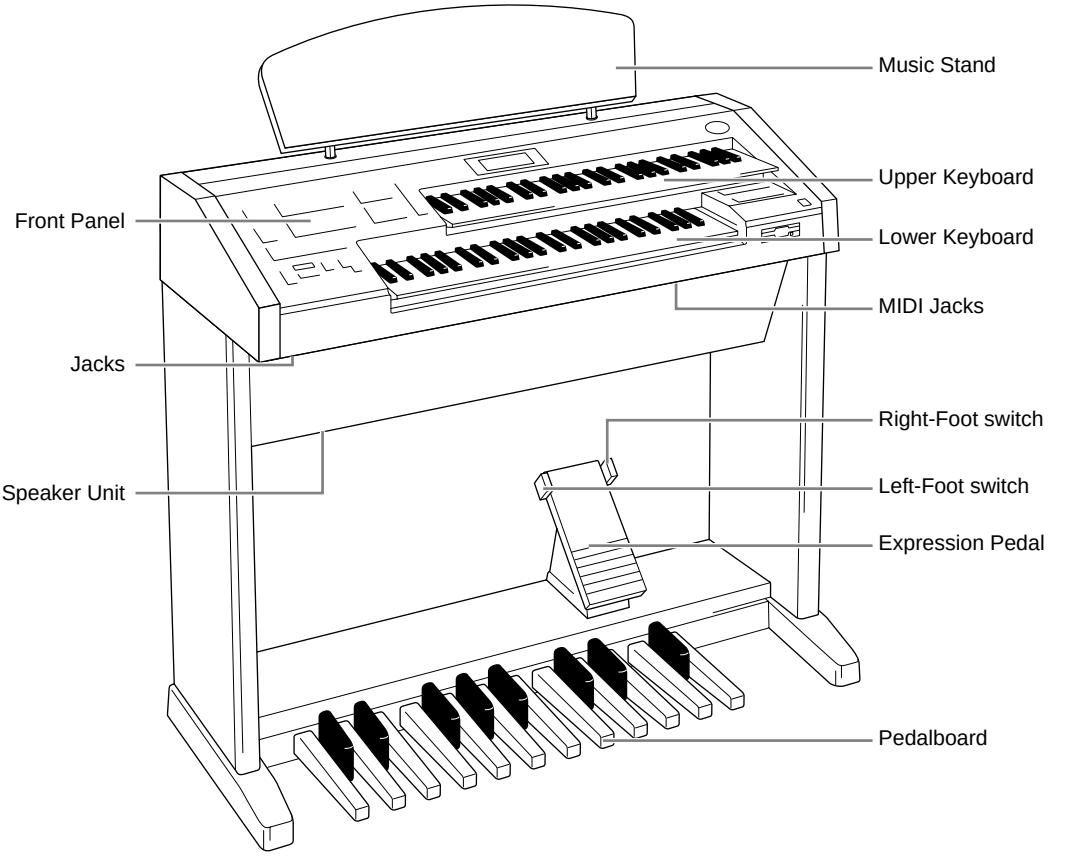

■ CIRCUIT BOARD LAYOUT

● Center Panel Assembly

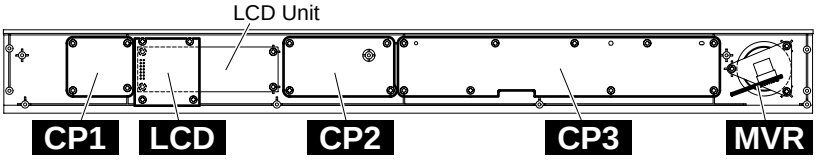

● Panel Unit

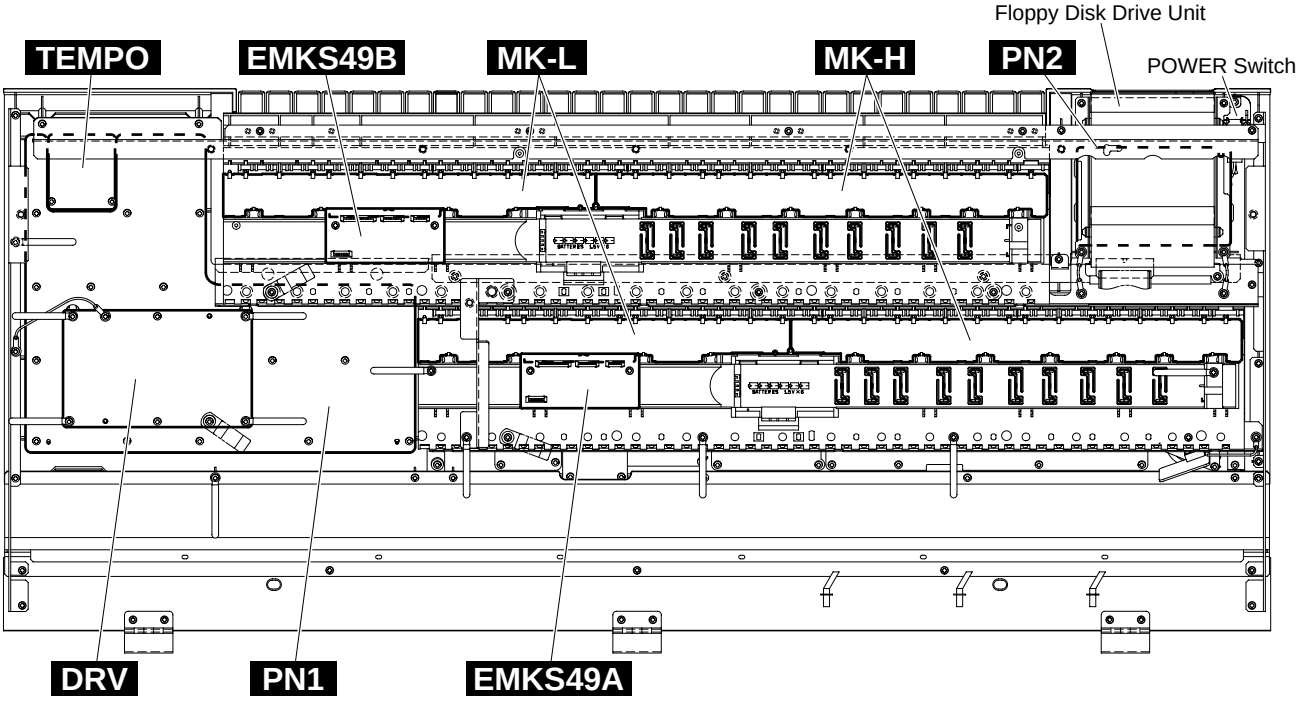

● Panel Case Unit

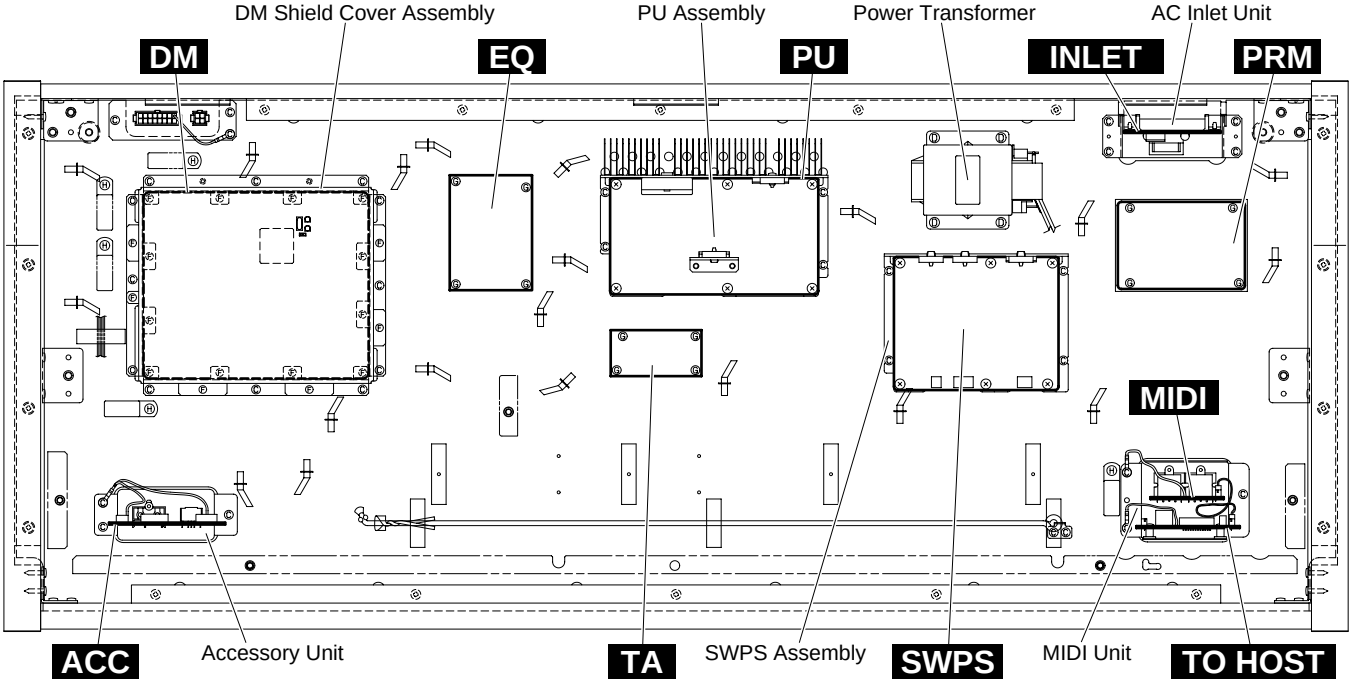

■ DISASSEMBLY PROCEDURE

1. Music Rest Assembly

(time required: about 1 minute)

1-1 Remove the music rest assembly. (Fig. 1)

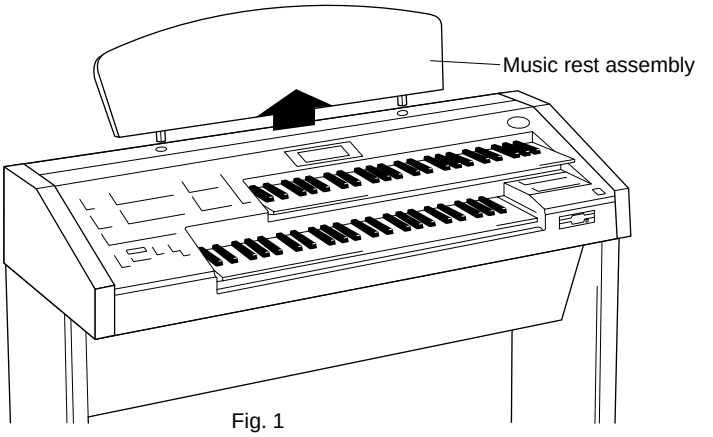

Fig. 1

2. Panel Unit

(time required: about 5 minutes)

2-1 Remove the six (6) screws marked [1cA] located on the under side of the panel unit. (Fig. 2)

2-2 Lift up the panel unit. Secure the stay, as shown in figure 3, to hold the panel unit. (Fig. 3)

<Bottom view>

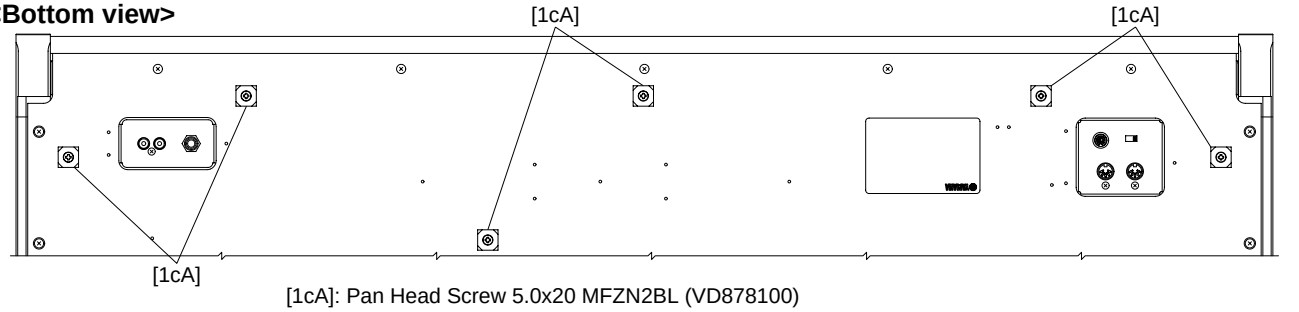

[1cA]: Pan Head Screw 5.0x20 MFZN2BL (VD878100)

Fig. 2

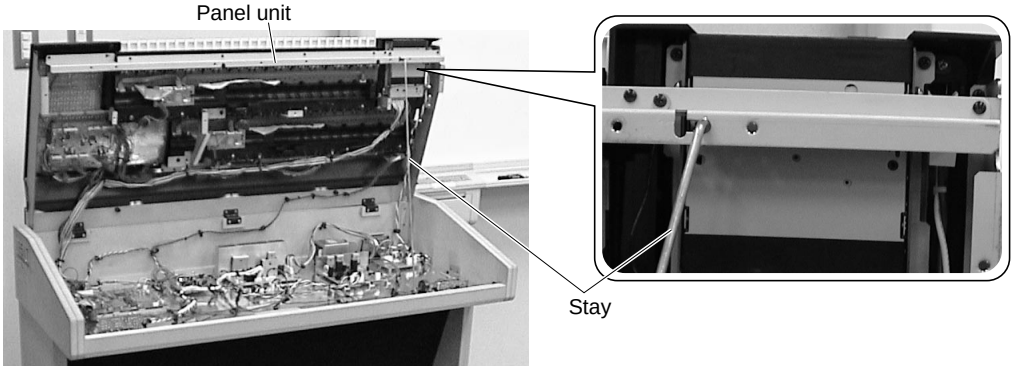

*** It is partly different from the product.**

Fig. 3

3. Circuit Boards and Units on the Panel Case Unit **(time required: about 5 minutes each)**

After open the panel unit, remove the following screws, each circuit board and unit on the panel case unit can then be removed.

Circuit Board and Unit	Ref. No.	Screw	QTY	Fig
PU Assembly	[24A]	Bind Head Tapping Screw-1 3.5x12 MFZN2Y (EP030240)	4	4
SWPS Assembly	[24B]	Bind Head Tapping Screw-1 3.5x12 MFZN2Y (EP030240)	4	4
MIDI Unit	[24C]	Bind Head Tapping Screw-1 3.5x12 MFZN2Y (EP030240)	3	4
Accessory Unit	[24D]	Bind Head Tapping Screw-1 3.5x12 MFZN2Y (EP030240)	3	4
AC Inlet Unit	[24E]	Bind Head Tapping Screw-1 3.5x12 MFZN2Y (EP030240)	4	4
Power Transformer	[25]	Bind Head Screw-1 4.0x12 MFZN2Y (EG340030)	4	4
DM Shield Cover Assembly	[27A]	Bind Head Tapping Screw-B 3.0x6 MFZN2Y (EP600130)	6	4
DM	[27B]	Bind Head Tapping Screw-B 3.0x6 MFZN2Y (EP600130)	12	4
PRM	[28A]	Bind Head Tapping Screw-1 3.5x20 MFZN2Y (EP030470)	4	4
EQ	[28B]	Bind Head Tapping Screw-1 3.5x20 MFZN2Y (EP030470)	4	4
TA	[28C]	Bind Head Tapping Screw-1 3.5x20 MFZN2Y (EP030470)	4	4

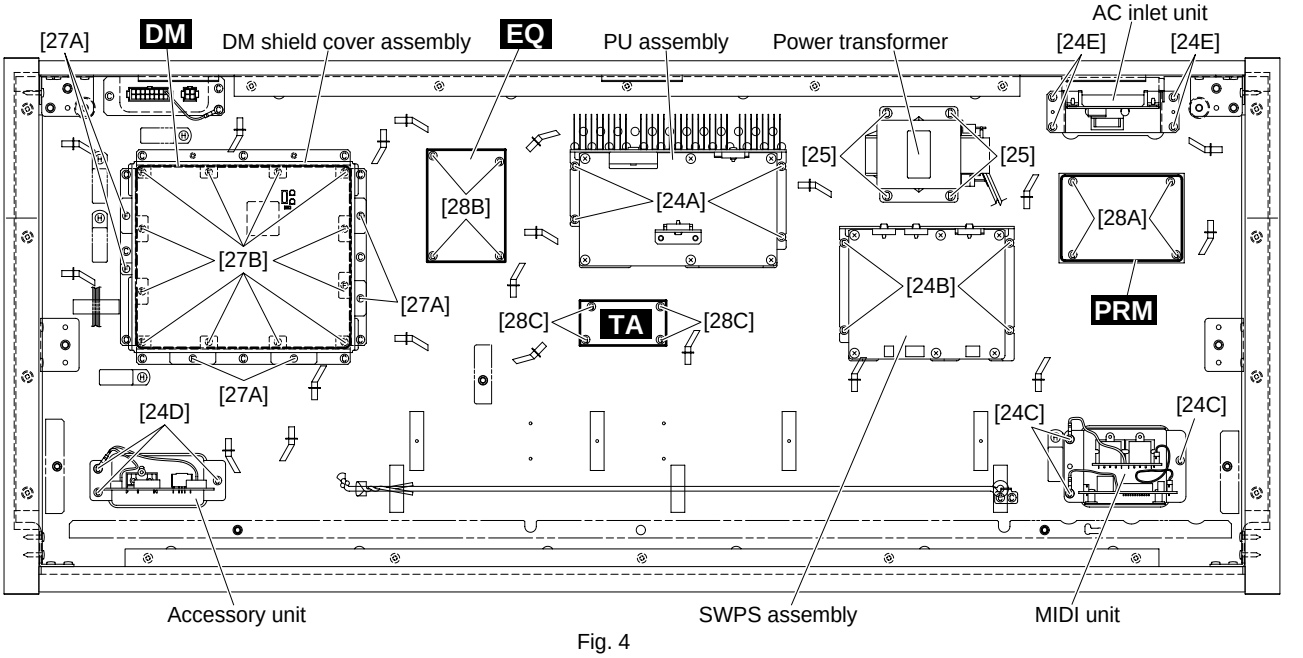

Fig. 4

4. MIDI, TO HOST Circuit Boards

(time required: about 10 minutes)

4-1 Remove the MIDI unit. (See Procedure 3.)

4-2 Remove the two (2) screws marked [M4A]. The MIDI circuit board can then be removed. (Fig. 5)

4-3 Remove the two (2) screws marked [M4B]. The TO HOST circuit board can then be removed. (Fig. 5)

5. ACC Circuit Board

(time required: about 10 minutes)

5-1 Remove the accessory unit. (See Procedure 3.)

5-2 Remove the screw marked [A3] and the hexagonal nut marked [A5]. The ACC circuit board can then be removed. (Fig. 6)

6. INLET Circuit Board

(time required: about 10 minutes)

6-1 Remove the AC inlet unit. (See Procedure 3.)

6-2 Remove the two (2) screws marked [I3A] and the two (2) screws marked [I3B]. The INLET circuit board can then be removed. (Fig. 7)

• **MIDI Unit**

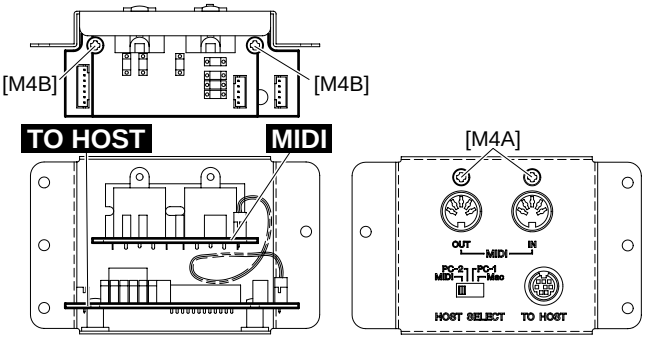

[M4]: Bind Head Tapping Screw-B 3.0x8 MFZN2BL (EP600190)

Fig. 5

• **Accessory Unit**

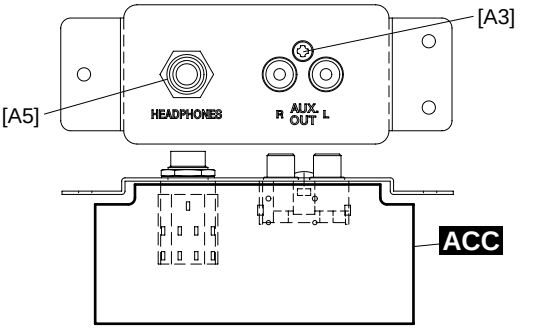

[A3]: Bind Head Tapping Screw-B 3.0x8 MFZN2BL (EP600190)
[A5]: Hexagonal Nut 12.0 14x2 MFZN2BL (VB508600)

Fig. 6

• **AC Inlet Unit**

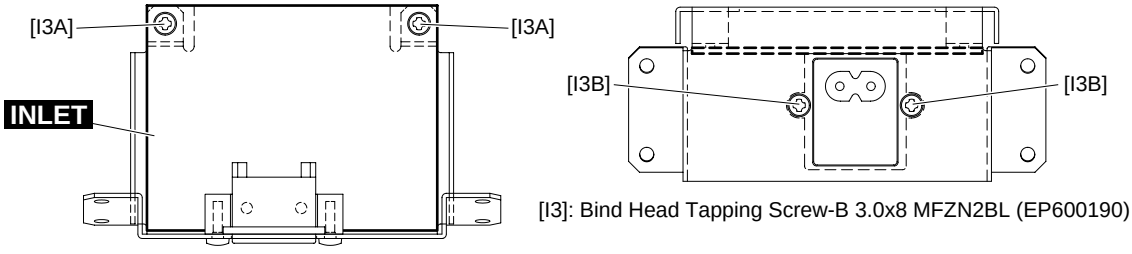

[I3]: Bind Head Tapping Screw-B 3.0x8 MFZN2BL (EP600190)

Fig. 7

7. Circuit Boards and Units on the Panel Unit

(time required: about 10 minutes each)

After open the panel unit, remove the following screws, each circuit board and unit on the panel unit can then be removed.

Circuit Board and Unit	Ref. No.	Screw	QTY	Fig
DRV	[13A]	Bind Head Tapping Screw-B 3.0x8 MFZN2Y (EP600250)	4	8
	[15]	Bind Head Screw 3.0x6 MFZN2BL (EG330360)	2	8
	[21]	Bind Head Screw 3.0x6 MFZN2BL (EG330360)	1	8
	[26]	Bind Head Screw 3.0x10 MFZN2Y (EG330060)	1	8
EMKS49A	[140A]	Bind Head Tapping Screw-P 3.0x8 MFZN2BL (EP630220)	2	8
	[18A]	Bind Head Tapping Screw-B 3.0x20 MFZN2Y (VI064600)	1	8
EMKS49B	[140B]	Bind Head Tapping Screw-P 3.0x8 MFZN2BL (EP630220)	2	8
	[18A]	Bind Head Tapping Screw-B 3.0x20 MFZN2Y (VI064600)	1	8

8. Keyboard Assembly (LK)

(time required: about 20 minutes)

8-1 Open the panel unit. (See Procedure 2.)

8-2 Remove the two (2) screws marked [18A] and [18B]. The keyboard support can then be removed. (Fig. 8)

8-3 Remove the two (2) screws marked [18C], the four (4) screws marked [19A] and the screw marked [24F]. The keyboard assembly (LK) can then be removed. (Fig. 8)

9. Keyboard Assembly (UK)

(time required: about 25 minutes)

9-1 Open the panel unit. (See Procedure 2.)

9-2 Remove the keyboard assembly (LK). (See Procedure 8.)

9-3 Remove the three (3) screws marked [18D], the four (4) screws marked [19B] and the screw marked [24G]. The keyboard assembly (UK) can then be removed. (Fig. 8)

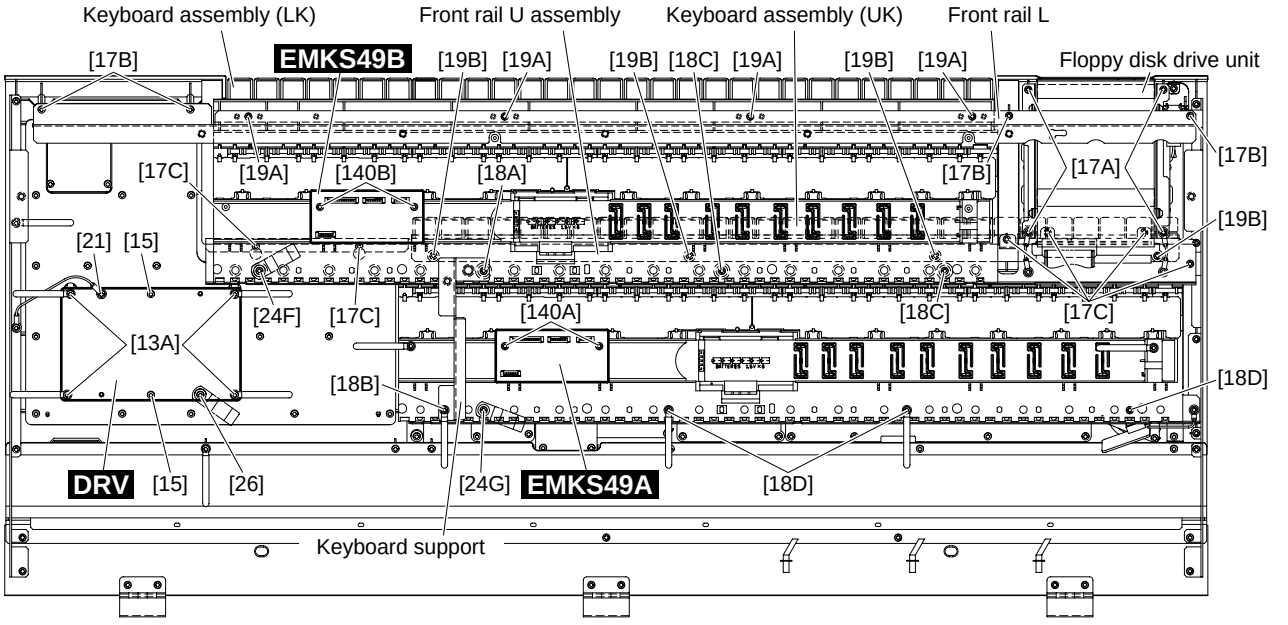

[17]: Bind Head Tapping Screw-B 3.0x10 MFZN2BL (EP600140)
[18]: Bind Head Tapping Screw-B 3.0x20 MFZN2Y (VI064600)
[19]: Bind Head Tapping Screw-B 3.0x8 MFZN2Y (EP600250)
[24]: Bind Head Tapping Screw-B 3.0x25 MFZN2BL (VU481600)

Fig. 8

10. Floppy Disk Drive Unit

(time required: about 10 minutes)

10-1 Open the panel unit. (See Procedure 2.)

10-2 Remove the four (4) screws marked [17A]. The floppy disk drive unit can then be removed. (Fig. 8)

10-3 Remove the four (4) screws marked [F4]. The FDD holder can then be removed. (Fig. 9)

11. Power Switch Assembly

(time required: about 15 minutes)

11-1 Open the panel unit. (See Procedure 2.)

11-2 Remove the floppy disk drive unit. (See Procedure 10.)

11-3 Remove the four (4) screws marked [17B] and the four (4) screws marked [19A]. The front rail L can then be removed. (Fig. 8)

11-4 Remove the two (2) screws marked [9A]. The power switch assembly can then be removed. (Fig. 10)

12. PN2 Circuit Board

(time required: about 15 minutes)

12-1 Open the panel unit. (See Procedure 2.)

12-2 Remove the floppy disk drive unit. (See Procedure 10.)

12-3 Remove the eight (8) screws marked [9B]. The PN2 circuit board can then be removed. (Fig. 10)

• Floppy Disk Drive Unit

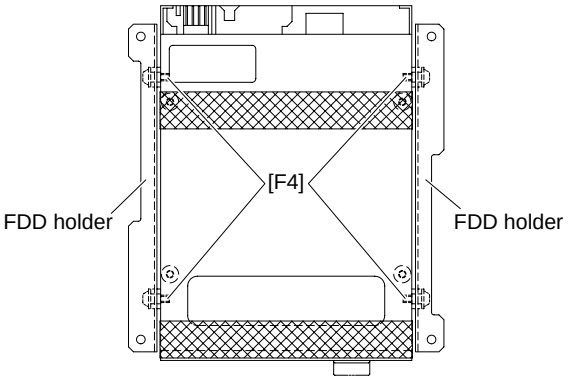

[F4] Cup Screw 3.0x7.5 MFZN2Y (VF916400)

Fig. 9

<Right panel side>

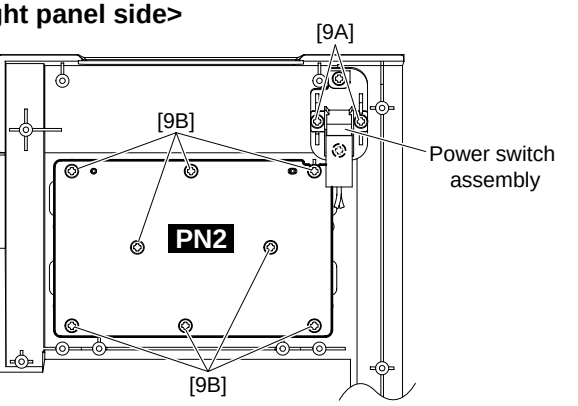

[9] Bind Head Tapping Screw-B 3.0x8 MFZN2Y (EP600250)

Fig. 10

13. PN1 Circuit Board

(time required: about 15 minutes)

13-1 Open the panel unit. (See Procedure 2.)

13-2 Remove the keyboard assembly (LK). (See Procedure 8.)

13-3 Remove the front rail L. (See Procedure 11.)

13-4 Remove the six (6) screws marked [17C] and the four (4) screws marked [19B]. The front rail U assembly can then be removed. (Fig. 8)

13-5 Remove the DRV circuit board. (See Procedure 7.)

13-6 Remove the twenty-two screws marked [13B]. The PN1 circuit board can then be removed. (Fig. 11)

14. TEMPO Circuit Board

(time required: about 10 minutes)

14-1 Open the panel unit. (See Procedure 2.)

14-2 Remove the front rail L. (See Procedure 11.)

14-3 Remove the four (4) screws marked [13C]. The TEMPO circuit board can then be removed. (Fig. 11)

<Left panel side>

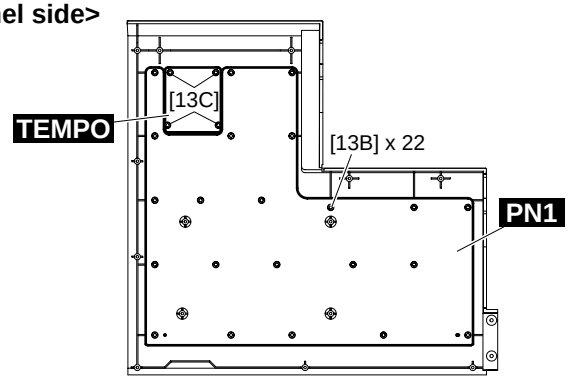

[13] Bind Head Tapping Screw-B 3.0x8 MFZN2Y (EP600250)

Fig. 11

15. Circuit Boards and Units on the Center Panel Unit (time required: about 25 minutes each)

15-1 Open the panel unit. (See Procedure 2.)

15-2 Remove the keyboard assembly (UK). (See Procedure 9.)

15-3 Remove the four (4) screws marked [17D]. The upper keyboard holder can then be removed. (Fig. 12)

15-4 Remove the following screws, each circuit board and unit on the center panel unit can then be removed.

Circuit Board and Unit	Ref. No.	Screw	QTY	Fig
CP1	[14A]	Bind Head Tapping Screw-B 3.0x8 MFZN2Y (EP600250)	4	13
CP2	[14B]	Bind Head Tapping Screw-B 3.0x8 MFZN2Y (EP600250)	4	13
CP3	[14C]	Bind Head Tapping Screw-B 3.0x8 MFZN2Y (EP600250)	9	13
LCD	[14D]	Bind Head Tapping Screw-B 3.0x8 MFZN2Y (EP600250)	4	13
LCD Unit	[14E]	Bind Head Tapping Screw-B 3.0x8 MFZN2Y (EP600250)	4	13
MVR Unit	[14F]	Bind Head Tapping Screw-B 3.0x8 MFZN2Y (EP600250)	3	13

16. MVR Circuit Board

(time required: about 25 minutes)

16-1 Open the panel unit. (See Procedure 2.)

16-2 Remove the MVR unit. (See Procedure 15.)

16-3 Remove the VR knob and the hexagonal nut marked [A].
The MVR circuit board can then be removed. (Fig. 14)

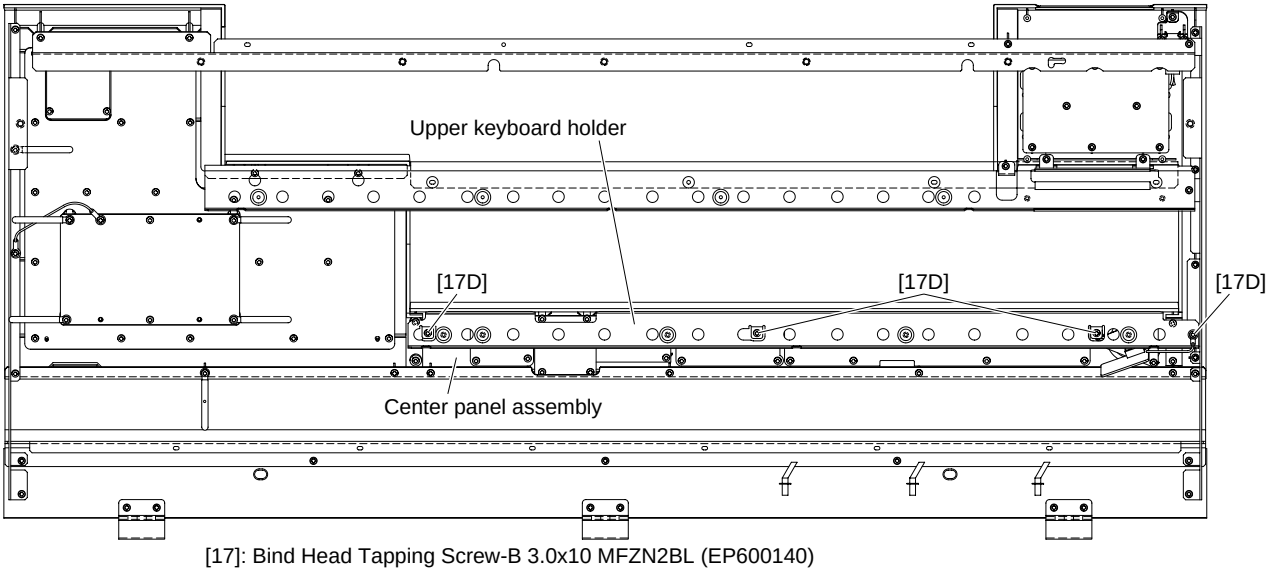

[17]: Bind Head Tapping Screw-B 3.0x10 MFZN2BL (EP600140)

Fig. 12

• Center Panel Assembly

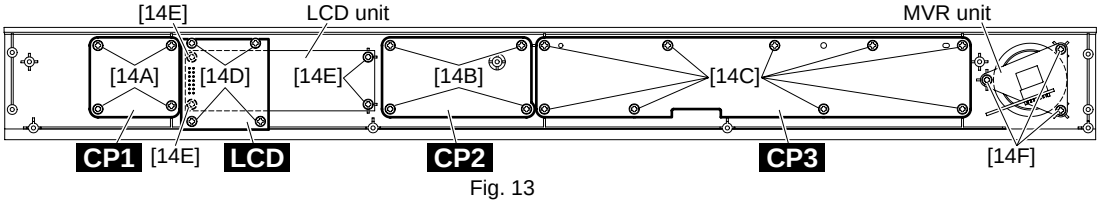

Fig. 13

• MVR Unit

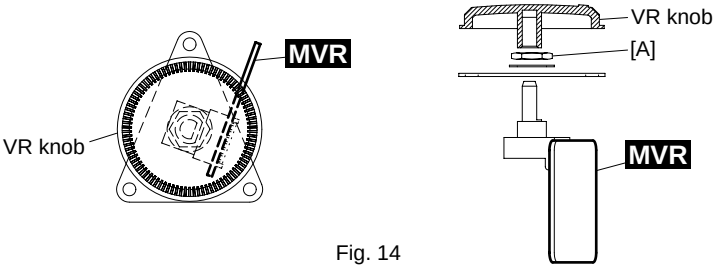

Fig. 14

17. Woofer (L, R), Tweeter (L, R)

(time required: about 10 minutes)

17-1 Remove the grille assembly. (Fig. 15)

17-2 Remove the four (4) screws marked [8A]. The woofer can then be removed. (Fig. 16)

17-3 Remove the four (4) screws marked [8B]. The tweeter can then be removed. (Fig. 16)

* The left and right woofer each can then be removed in the same manner.

18. NW Circuit Board
(time required: about 10 minutes)

18-1 Remove the left woofer. (See Procedure 17.)

18-2 Remove the four (4) screws marked [1cB]. The NW circuit board can then be removed. (Fig. 16)

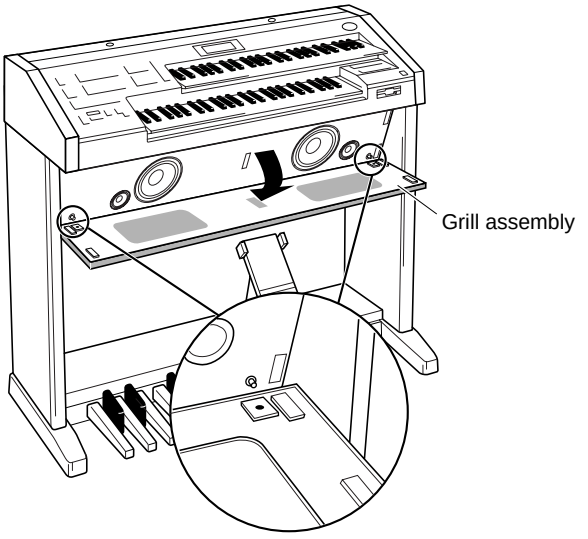

Fig. 15

19. Upper Unit **(time required: about 5 minutes)**

19-1 Disconnect the NW-SP cable, the PKL cable and the AC cord. (Fig. 17)

19-2 Remove the four (4) screws marked [S2]. The upper unit can then be removed. (Fig. 18)

20. Speaker Box Unit
(time required: about 10 minutes)

20-1 Remove the upper unit. (See Procedure 19.)

20-2 Remove the four (4) screws marked [S1A] and the four (4) screws marked [S3]. The speaker box unit can then be removed. (Fig. 19)

21. Side Cover Assembly (L, R)
(time required: about 15 minutes)

21-1 Remove the upper unit. (See Procedure 19.)

21-2 Open the panel unit. (See Procedure 2.)

21-3 Remove the four (4) screws marked [22A], the two (2) screws marked [23A] and the three (3) screws marked [23B]. The side cover assembly can then be removed. (Fig. 20)

* The left and right side cover assembly each can then be removed in the same manner.

22. Back Top Board Assembly
(time required: about 20 minutes)

22-1 Remove the upper unit. (See Procedure 19.)

22-2 Remove the side cover assembly. (See Procedure 21.)

22-3 Remove the five (5) screws marked [22B] and the six (6) screws (right and left, 3pcs each) marked [23B]. The back top board assembly can then be removed. (Fig. 20)

• Speaker Box Unit

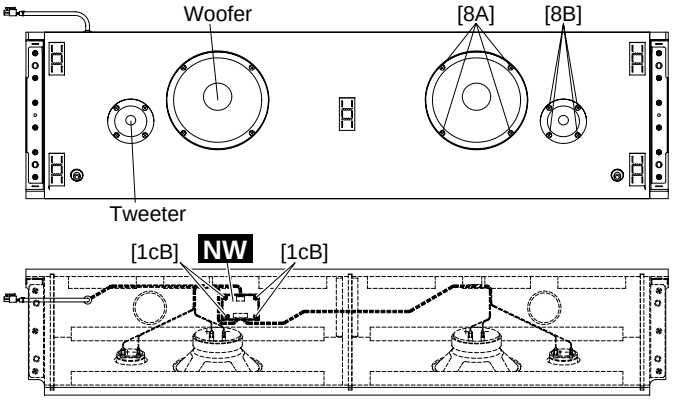

[1cB]: Bind Head Tapping Screw-1 3.5x20 MFZN2Y (EP030470)
[8]: Bind Head Tapping Screw-1 4.0x16 MFZN2BL (EP040250)

Fig. 16

23. Front Rail Assembly

(time required: about 20 minutes)

23-1 Open the panel unit. (See Procedure 2.)

23-2 Remove the five (5) screws marked [22C] and the four (4) screws (right and left, 2pcs each) marked [23A]. The front rail assembly can then be removed. (Fig. 20)

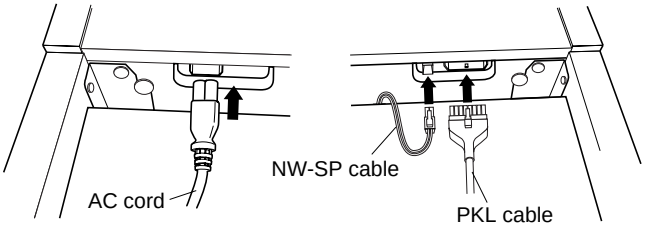

Fig. 17

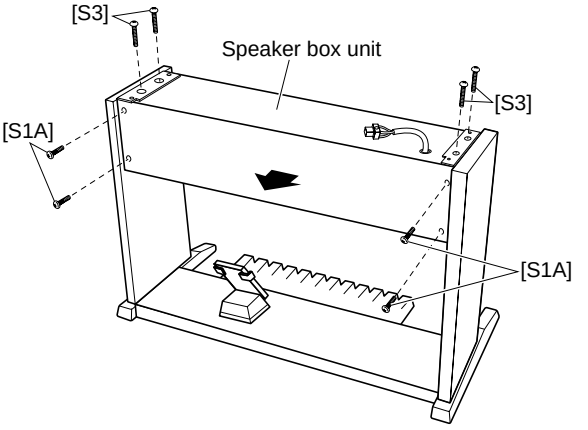

[S1]: Bind Head Screw 5.0x12 MFZN2BL (EG350170)
[S3]: Truss Head Screw 5.0x25 MFZN2Y

Fig. 19

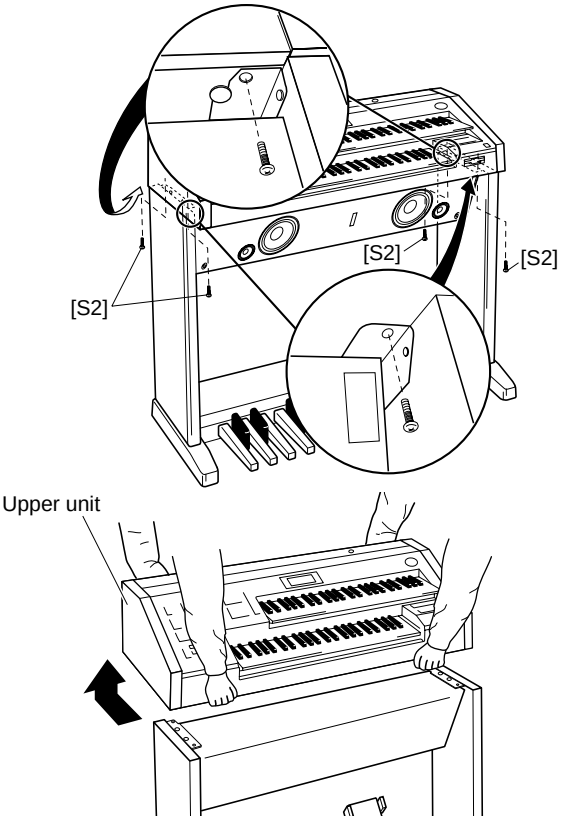

[S2]: Bind Head Screw 6.0x25 MFZN2BL (VB131900)

Fig. 18

<Bottom view>

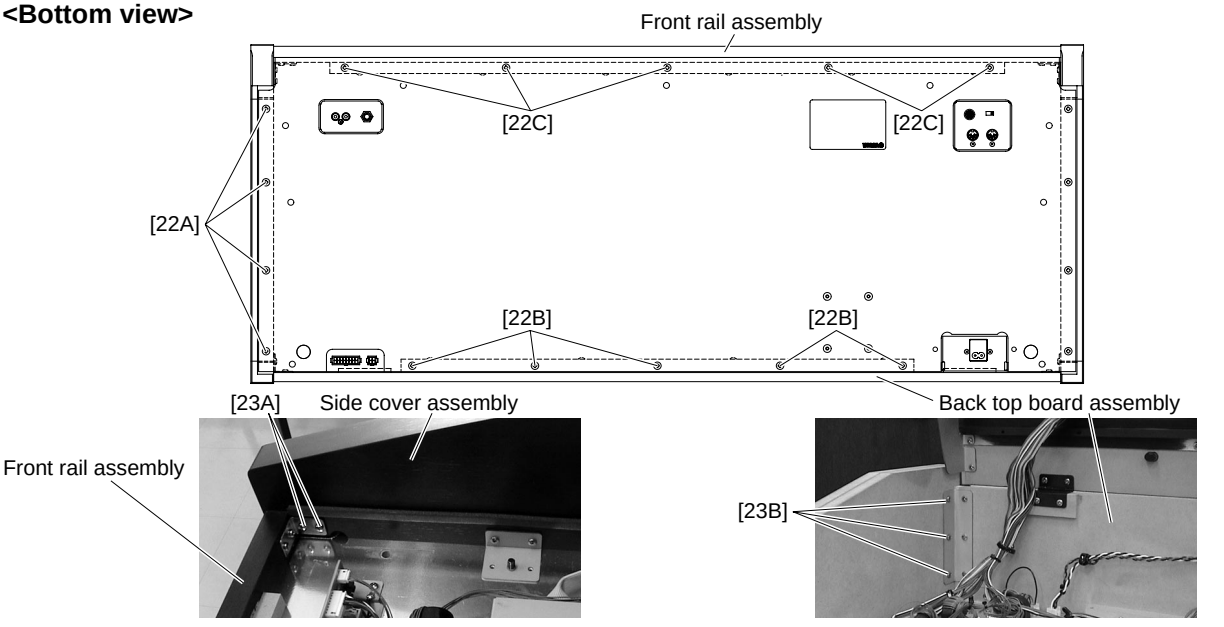

[22]: Truss Head Tapping Screw-1 3.5x25 MFZN2BL (EN630190)

[23]: Bind Head Tapping Screw-1 3.5x16 MFZN2Y (EP030190)

Fig. 20

24. Side Board Unit (L, R)

(time required: about 20 minutes)

24-1 Remove the upper unit. (See Procedure 19.)

24-2 Remove the speaker box unit. (See Procedure 20.)

24-3 With a soft cloth like a blanket placed on the floor. Place the unit gently so that the keyboard side is faced toward the top. (Fig. 21)

* For safty, this work should be done by two persons.

24-4 Remove the two (2) screws marked [S1B]. The side board unit can then be removed. (Fig. 21)

* The left and right side board each can then be removed in the same manner.

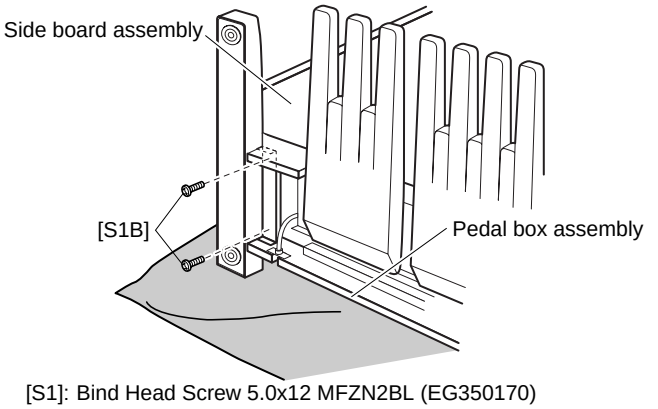

[S1]: Bind Head Screw 5.0x12 MFZN2BL (EG350170)

Fig. 21

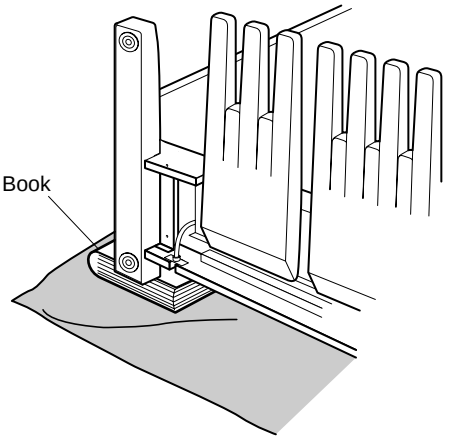

Fig. 22

25. Stand Base Assembly

(time required: about 10 minutes)

25-1 With a soft cloth like a blanket placed on the floor. Place the unit gently so that the keyboard side is faced toward the top. (Fig. 21)

* For safty, this work should be done by two persons.

25-2 Put thick books or the like under the unit at both sides. (Fig. 22)

25-3 Remove the three (3) screws marked [L7]. The side base assembly can then be removed. (Fig. 23)

25-4 Remove the four (4) screws marked [L5c]. The foot F, R and C can then be removed. (Fig. 23)

* The left and right side base assembly each can then be removed.

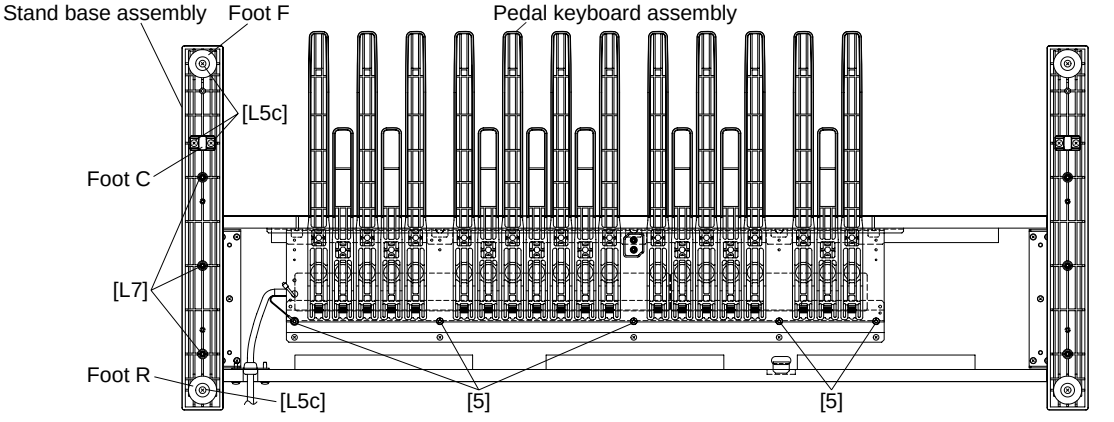

[L5c]: Bind Head Tapping Screw-B 4.0x12 MFZN2Y (VA914400)
[L7]: Pan Head Tapping Screw-1 4.0x65 MFZN2Y (VV444000)
[5]: Bind Head Tapping Screw-S 4.0x25 MFZN2BL (VL063800)

Fig. 23

26. EXP Pedal (time required: about 10 minutes)

26-1 Remove the three (3) screws marked [8C]. The EXP pedal can then be removed. (Fig. 24)

27. Pedal Keyboard Assembly, Pedal Box Assembly (time required: about 15 minutes)

27-1 Remove the EXP pedal. (See Procedure 26.)

27-2 Disconnect the PKL cable. (Fig. 17)

27-3 With a soft cloth like a blanket placed on the floor. Place the unit gently so that the keyboard side is faced toward the top. (Fig. 21)

* For safty, this work should be done by two persons.

27-4 Remove the five (5) screws marked [5]. The pedal keyboard assembly can then be removed. (Fig. 23)

27-5 Remove the four (4) screws (right and left, 2pcs each) marked [S1B]. The pedal box assembly can then be removed. (Fig. 21)

28. Disassembling the pedal keyboard (time required: about 15 minutes)

28-1 Remove the pedal keyboard assembly. (See Procedure 27.)

28-2 Remove the hexagonal nut marked [P12]. The The white (or black) key can then be removed. Each white key and black key can be removed in the same manner. (Fig. 25)

28-3 Remove the five (5) screws marked [P11A]. The PKH circuit board can then be removed. (Fig. 25)

28-4 Remove the eight (8) screws marked [P11B]. The PKL circuit board can then be removed. (Fig. 25)

<Front side>



<Rear side>

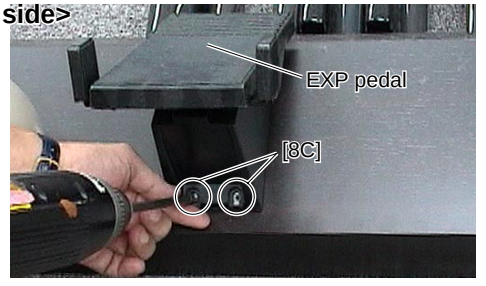

[8C]: Bind Head Screw 4.0x10 MFZN2BL (VA221600)

Fig. 24

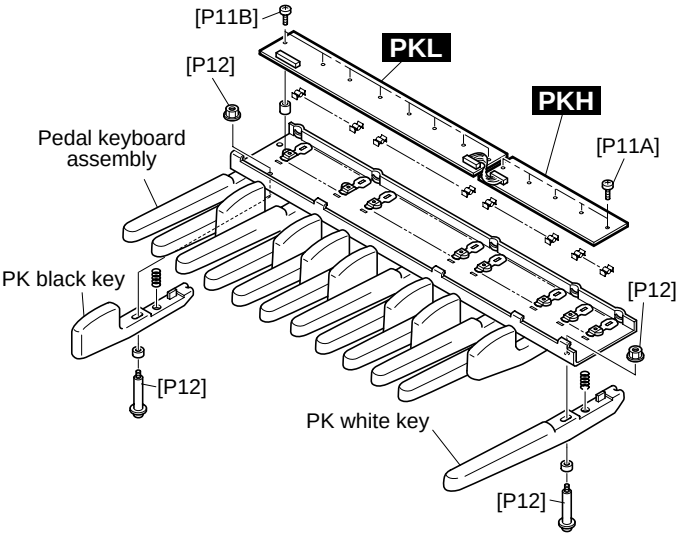

[P11]: Bind Head Tapping Screw-S 3.0x12 MFZN2Y (VH553800)
[P12]: Hexagonal Nut 4.0 MFZN2B (VP919300)

Fig. 25

29. Disassembling the Keyboard

(time required: about 25 minutes)

29-1 Remove the keyboard assembly. (See Procedure 11.)

29-2 Remove the EMKS circuit board. (See Procedure 7.)

29-3 Remove the MK-L and MK-H circuit board while pressing the fifteen (15) hooks A inward, and then remove the rubber contact. (Fig. 26)

29-4 Remove the sixteen (16) screws marked [110], then remove the black keys from the lower notes. Afterwards, remove the white keys DFA and C' and then remove the white keys CEGB from the higer notes. At this time, lift the keys from the front and slide them towards you. The keys can then be removed from the assembly. (Fig. 27)

30. Assembling the keyboard

(time required: about 25 minutes)

30-1 Install the white keys CEGB from the lower notes, and then install the DFA keys and C' key. Afterwards install the black keys from the higher notes, and tighten the sixteen (16) screws marked [110]. (Fig. 27)

30-2 Install the rubber contacts in the assembly while pressing the keys as shown in Figure 28. Check that the rubber contact has been firmly placed into position in the area indicated by the arrow in Figure 29. When fitting the rubber contacts, raise both ends of the frame so that keys do not push the rubber contact up.

30-3 Install the MK-L and MK-H circuit boards in the assembly so that the hooks B hold it as shown in Figure 30.

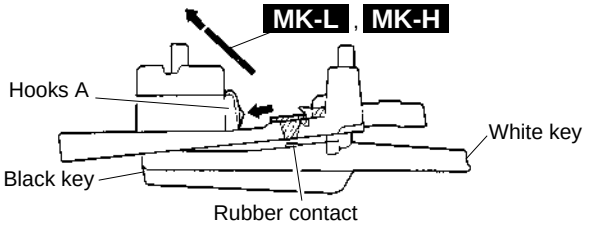

Fig. 26

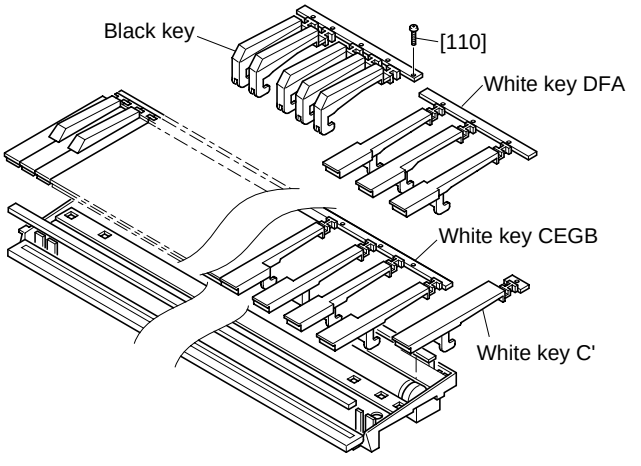

[110]: Bind Head Tapping Screw-P 3.0x16 MFZN2BL (VB205200)

Fig. 27

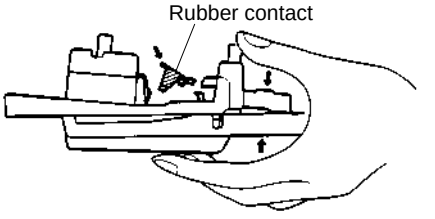

Fig. 28

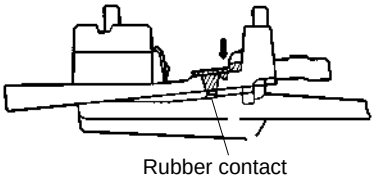

Fig. 29

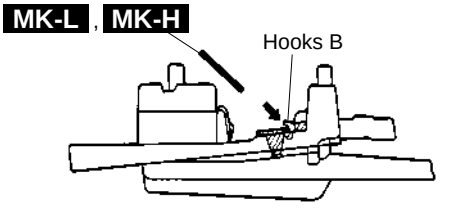

Fig. 30

31. Left Panel (time required: about 20 minutes)

31-1 Open the panel unit. (See Procedure 2.)
31-2 Remove the keyboard assembly (LK). (See Procedure 8.)
31-3 Remove the keyboard assembly (UK). (See Procedure 9.)
31-4 Remove the front rail L. (See Procedure 11.)
31-5 Remove the front rail U assembly. (See Procedure 13.)
31-6 Remove the upper keyboard holder. (See Procedure 15.)
31-7 Remove the DRV, PN1 and TEMPO circuit board on the left panel. (See Procedure 13, 14.)
31-8 Remove the two (2) screws marked [17E] and the six (6) screws marked [17F]. The left panel can then be removed. (Fig. 31)

32. Center Panel (time required: about 20 minutes)

32-1 Open the panel unit. (See Procedure 2.)
32-2 Remove the keyboard assembly (UK). (See Procedure 9.)
32-3 Remove the upper keyboard holder. (See Procedure 15.)
32-4 Remove each circuit board and unit on the center panel. (See Procedure 15.)
32-5 Remove the two (2) screws marked [17E], the four (4) screws marked [17G] and the two (2) screws marked [17H]. The center panel can then be removed. (Fig. 31)

33. Right Panel (time required: about 20 minutes)

33-1 Open the panel unit. (See Procedure 2.)
33-2 Remove the keyboard assembly (LK). (See Procedure 8.)
33-3 Remove the keyboard assembly (UK). (See Procedure 9.)
33-4 Remove the floppy disk drive unit. (See Procedure 10.)
33-5 Remove the power switch assembly and the front rail L. (See Procedure 11.)
33-6 Remove the PN2 circuit board. (See Procedure 12.)
33-7 Remove the front rail U assembly. (See Procedure 13.)
33-8 Remove the upper keyboard holder. (See Procedure 15.)
33-9 Remove the two (2) screws marked [17H] and the four (4) screws marked [17I]. The right panel can then be removed. (Fig. 31)

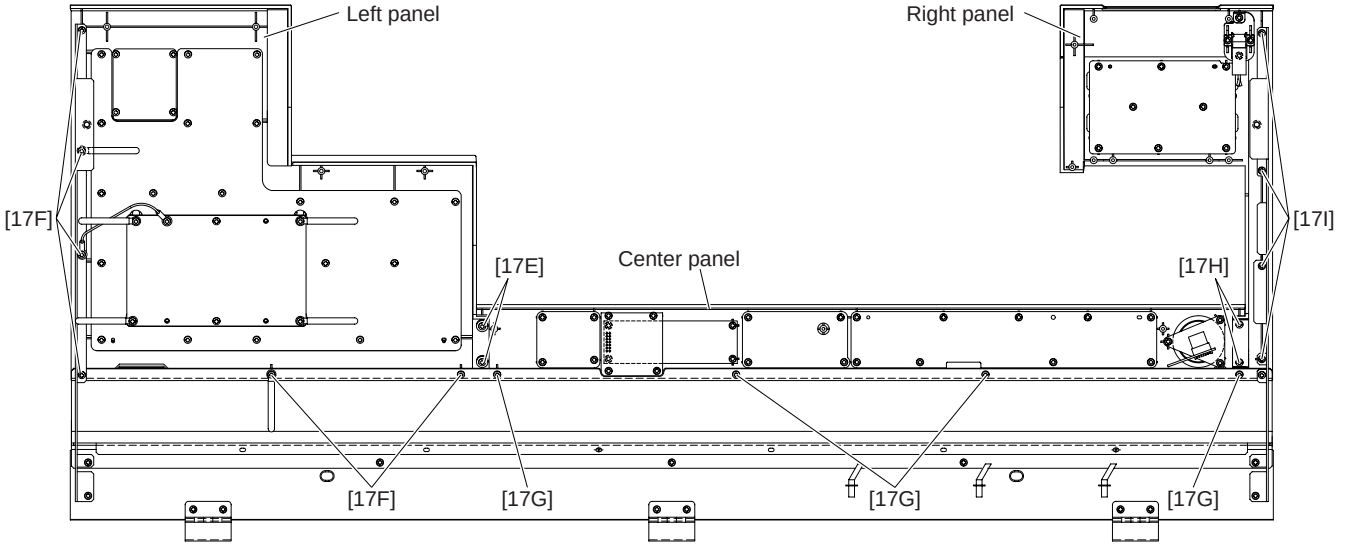

[17]: Bind Head Tapping Screw-B 3.0x10 MFZN2BL (EP600140)

Fig. 31

■ LSI PIN DESCRIPTION

HD63266F (XI939A00) **FDC** (Floppy Disk Controller) ····· 21
AK4393-VF-E2 (XW029A00) **DAC** (Digital to Analog Converter) ····· 21
HD6417709SF133 (X2081A00) **CPU** (SH3) ····· 22
T8F02TB-0102 (X0060A00) **SWP50** ····· 23
μ**PD780031AYGK-N01-9ET** (XZ916100) **LED DRIVER/SWITCH SCAN** ····· 25
μ**PD780031AYGK-N02-9ET** (X0031100) **LKS** ····· 25

● **HD63266F** (XI939A00) **FDC** (Floppy Disk Controller)

DM: IC001

PIN NO.	NAME	I/O	FUNCTION	PIN NO.	NAME	I/O	FUNCTION
1	8"//5"	I	Data transmission speed	33	/TRKO	I	Track 00 signal
2	XTALSET	I	Clock select	34	/INDEX	I	Index signal
3	/RESET	I	Rest	35	/RDATA	I	Read data input from FDD
4	E//RD	I	Enable/Read	36	XTAL2		Clock
5	RW//WR	I	Read/write/Write	37	EXTAL2		
6	/CS	I	Chip select	38	NC		
7	/DACK	I	DMA acknowledge	39	XTAL1		Clock
8	RS0	I	Register select	40	EXTAL1		
9	RS1	I		41	VSS4		Ground
10	VSS1		Ground	42	VSS5		
11	VSS2			43	NC		
12	D0	I/O	Data bus	44	VCC2		Power supply
13	D1	I/O		45	VCC3		
14	D2	I/O		46	VCC4		
15	D3	I/O		47	/WGATE	O	Write control
16	D4	I/O		48	/WDATA	O	Write data to FDD
17	D5	I/O		49	VSS6		Ground
18	D6	I/O		50	/STEP	O	Step signal to control head of FDD
19	D7	I/O		51	/HDIR	O	Direction
20	/DREQ	O	DMA request	52	/HLOAD	O	Head load
21	/IRQ	O	Interrupt request	53	/HSEL	O	Head select
22	/DEND	I	Data end	54	VSS7		Ground
23	VSS3		Ground	55	/DS0	O	Drive select
24	1/2 EX1			56	/DS1	O	
25	VCC1		Power supply	57	/DS2	O	
26	NUM1	I		58	/DS3	O	
27	NUM3	I		59	VSS8		Ground
28	IFS	I	Host interface select	60	/MON0	O	Motor on
29	SFORM	I	Format data	61	/MON1	O	
30	/INP	I	Index pulse	62	/MON2	O	
31	/READY	I	Ready from FDD	63	/MON3	O	
32	/WPRT	I	Write control signal	64	VSS9		Ground

● **AK4393-VF-E2** (XW029A00) **DAC** (Digital to Analog Converter)

DM: IC027

PIN NO.	NAME	I/O	FUNCTION	PIN NO.	NAME	I/O	FUNCTION
1	DVSS	-	Digital ground	15	BVSS	-	Substrate ground
2	DVDD	-	Digital power supply	16	VREFL	I	Low level voltage reference
3	MCLK	I	Master clock	17	VREFH	I	High level voltage reference
4	/PD	I	Power down mode	18	AVDD	-	Analog power supply +5 V
5	BICK	I	Audio serial data clock	19	AVSS	-	Analog ground
6	SDATA	I	Audio serial data input	20	AOUTR-	O	Rch negative analog output
7	LRCK	I	L/R clock	21	AOUTR+	O	Rch positive analog output
8	SMUTE//CS	I	Soft mute	22	AOUTL-	O	Lch negative analog output
9	DFS	I	Double speed sampling mode	23	AOUTL+	O	Lch positive analog output
10	DEM0/CCLK	I	De-emphasis enable	24	VCOM	O	Common voltage output
11	DEM1/CDTI	I		25	P//S	I	Parallel/serial select
12	DIF0	I	Digital input format	26	CKS0	I	Master clock select
13	DIF1	I		27	CKS1	I	
14	DIF2	I		28	CKS2	I	

● **HD6417709SF133** (X2081A00) **CPU** (SH3)

DM: IC014

PIN NO.	NAME	I/O	FUNCTION	PIN NO.	NAME	I/O	FUNCTION
1	MD1	I	Mode control	105	CKE/PTK5	I/O	CK enable / Port K
2	MD2	I		106	RAS3L/PTJ0	I/O	RAS address bus / Port J
3	Vcc(RTC)	-	Power supply +1.8 V	107	PTJ1	I/O	Port J
4	XTAL2	O	Crystal oscillator	108	CASL/PTJ2	I/O	CAS address bus / Port J
5	EXTAL2	I		109	VssQ	-	Ground
6	Vss(RTC)	-	Ground	110	CASU/PTJ3	I/O	CAS address bus / Port J
7	NMI	I	Non-maskable interrupt request	111	VccQ	-	Power supply +3.3 V
8	IRQ0/IRL0/PTH0	I	Interrupt request / Port H	112	PTJ4	I/O	Port J
9	IRQ1/IRL1/PTH1	I		113	PTJ5	I/O	
10	IRQ2/IRL2/PTH2	I		114	DACK0/PTD5	I/O	DMA acknowledge / Port D
11	IRQ3/IRL3/PTH3	I		115	DACK1/PTD7	I/O	
12	IRQ4/PTH4	I		116	PTE6	I/O	Port E
13	D31/PTB7	I/O	Data bus / Port B	117	PTE3	I/O	
14	D30/PTB6	I/O		118	RAS3U/PTE2	I/O	RAS address bus / Port E
15	D29/PTB5	I/O		119	PTE1	I/O	Port E
16	D28/PTB4	I/O		120	TDO/PTE0	I/O	Test data / Port E
17	D27/PTB3	I/O		121	BACK	O	Bus acknowledge
18	D26/PTB2	I/O		122	BREQ	I	Bus request
19	VssQ	-	Ground	123	WAIT	I	Hardware wait request
20	D25/PTB1	I/O	Data bus / Port B	124	RESETM	I	Manual reset
21	VccQ	-	Power supply +3.3 V	125	ADTRG/PTH5	I	Analog trigger / Port H
22	D24/PTB0	I/O	Data bus / Port B	126	IOIS16/PTG7	I	Write protect / Port G
23	D23/PTA7	I/O	Data bus / Port A	127	ASEMD0/PTG6	I	ASE mode / Port G
24	D22/PTA6	I/O		128	ASEBRKAK/PTG5	I/O	ASE break acknowledge / Port G
25	D21/PTA5	I/O		129	PTG4/CKIO2	I/O	Port G / Clock output
26	D20/PTA4	I/O		130	AUDATA3/PTG3	I/O	AUD data / Port G
27	Vss	-	Ground	131	AUDATA2/PTG2	I/O	
28	D19/PTA3	I/O	Data bus / Port A	132	Vss	-	Ground
29	Vcc	-	Power supply +1.8 V	133	AUDATA1/PTG1	I/O	AUD data / Port G
30	D18/PTA2	I/O	Data bus / Port A	134	Vcc	-	Power supply +1.8 V
31	D17/PTA1	I/O		135	AUDATA0/PTG0	I/O	AUD data / Port G
32	D16/PTA0	I/O		136	TRST/PTF7/PINT15	I	Test reset / Port F / Port interruption
33	VssQ	-	Ground	137	TMS/PTF6/PINT14	I	Test mode switch / Port F / Port interruption
34	D15	I/O	Data bus	138	TDI/PTF5/PINT13	I	Test data / Port F / Port interruption
35	VccQ	-	Power supply +3.3 V	139	TCK/PTF4/PINT12	I	Test clock / Port F / Port interruption
36	D14	I/O	Data bus	140	IRLS3/PTF3/PINT11	I	Interrupt request / Port F / Port interruption
37	D13	I/O		141	IRL2/PTF2/PINT10	I	
38	D12	I/O		142	IRLS1/PTF1/PINT9	I	
39	D11	I/O		143	IRLS0/PTF0/PINT8	I	
40	D10	I/O		144	MD0	I	Mode control
41	D9	I/O		145	Vcc(PLL1)	-	Power supply +1.8 V
42	D8	I/O		146	CAP1	-	Capacitor
43	D7	I/O		147	Vss(PLL1)	-	Ground
44	D6	I/O		148	Vss(PLL2)	-	Ground
45	VssQ	-	Ground	149	CAP2	-	Capacitor
46	D5	I/O	Data bus	150	VCC(PLL2)	-	Power supply +1.8 V
47	VccQ	-	Power supply +3.3 V	151	AUDCK/PTH6	I	AUD clock / Port H
48	D4	I/O	Data bus	152	Vss	-	Ground
49	D3	I/O		153	Vss	-	
50	D2	I/O		154	Vcc	-	Power supply +1.8 V
51	D1	I/O		155	XTAL1	O	Crystal oscillator
52	D0	I/O		156	EXTAL1	I	
53	A0	O	Address bus	157	STATUS0/PTJ6	I/O	Processor status / Port J
54	A1	O		158	STATUS1/PTJ7	I/O	
55	A2	O		159	TCLK/PTH7	I/O	Timer clock / Port H
56	A3	O		160	/IRQOUT	O	Interrupt request output
57	VssQ	-	Ground	161	VssQ	-	Ground
58	A4	O	Address bus	162	CKIO	I/O	System clock input / output
59	VccQ	-	Power supply +3.3 V	163	VccQ	-	Power supply +3.3 V
60	A5	O	Address bus	164	TXD0/SCPT0	O	Data transmission / SCI port
61	A6	O		165	SCK0/SCPT1	I/O	Serial clock / SCI port
62	A7	O		166	TXD1/SCPT2	O	Data transmission / SCI port
63	A8	O		167	SCK1/SCPT3	I/O	Serial clock / SCI port
64	A9	O		168	TXD2/SCPT4	O	Data transmission / SCI port
65	A10	O		169	SCK2/SCPT5	I/O	Serial clock / SCI port
66	A11	O		170	RTS2/SCPT6	I/O	Transmit request / SCI port
67	A12	O		171	RXD0/SCPT0	I	Data reception / SCI port
68	A13	O		172	RXD1/SCPT2	I	
69	VssQ	-	Ground	173	Vss	-	Ground
70	A14	O	Address bus	174	RXD2/SCPT4	I	Data reception / SCI port
71	VccQ	-	Power supply +3.3 V	175	Vcc	-	Power supply +1.8 V
72	A15	O	Address bus	176	CTS2/IRQ5/SCPT7	I	Transmit clear / Interrupt request / SCI port
73	A16	O		177	MCS7/PTC7/PINT7	I/O	Mask ROM chip select / Port C / Port interruption
74	A17	O		178	MCS6/PTC6/PINT6	I/O	
75	A18	O		179	MCS5/PTC5/PINT5	I/O	
76	A19	O		180	MCS4/PTC4/PINT4	I/O	
77	A20	O		181	VssQ	-	Ground
78	A21	O		182	WAKEUP/PTD3	I/O	Standby mode Interrupt request output / Port D
79	Vss	-	Ground	183	VccQ	-	Power supply +3.3 V
80	A22	O	Address bus	184	RESETOUT/PTD2	I/O	Reset output / Port D
81	Vcc	-	Power supply +1.8 V	185	MCS3/PTC3/PINT3	I/O	Mask ROM chip select / Port C / Port interruption
82	A23	O	Address bus	186	MCS2/PTC2/PINT2	I/O	
83	VssQ	-	Ground	187	MCS1/PTC1/PINT1	I/O	
84	A24	O	Address bus	188	MCS0/PTC0/PINT0	I/O	
85	VccQ	-	Power supply +3.3 V	189	DRAK0/PTD1	I/O	DMA acknowledge / Port D
86	A25	O	Address bus	190	DRAK1/PTD0	I/O	
87	BS/PTK4	I/O	Bus cycle / Port K	191	DREQ0/PTD4	I	DMA request / Port D
88	RD	O	Read strobe	192	DREQ1/PTD6	I	
89	WE0/DQMLL	O	Select signal (D7-D0) / D QM (SDRAM)	193	RESETP	I	Power on reset
90	WE1/DQMLU/WE	O	Select signal (D15-D8) / D QM (SDRAM) / Write enable	194	CA	I	Chip active
91	WE2/DQMUU/ICIORD/PTK6	I/O	Select signal (D23-D16) / D QM (SDRAM) / I/O read / Port K	195	MD3	I	Mode control
92	WE3/DQMUU/ISIOWR/PTK7	I/O	Select signal (D31-D24) / D QM (SDRAM) / I/O write / Port K	196	MD4	I	
93	RD/WR	O	Read / Write	197	MD5	I	
94	AUDSYNC/PTE7	I/O	AUD cycle / Port E	198	AVss	-	Analog ground
95	VssQ	-	Ground	199	AN0/PTL0	I	Analog input / Port L
96	CS0/MCS0	O	Chip select / Mask ROM chip select	200	AN1/PTL1	I	
97	VccQ	-	Power supply +3.3V	201	AN2/PTL2	I	
98	CS2/PTK0	I/O	Chip select / Port K	202	AN3/PTL3	I	
99	CS3/PTK1	I/O		203	AN4/PTL4	I	
100	CS4/PTK2	I/O		204	AN5/PTL5	I	
101	CS5/CE1A/PTK3	I/O	Chip select / Chip enable / Port K	205	AVcc	-	Analog power supply +3.3 V
102	CS6/CE1B	O	Chip select / Chip enable	206	AN6/DA1/PTL6	I/O	Analog input / Analog output / Port L
103	CE2A/PTE4	I/O	Chip enable / Port E	207	AN7/DA0/PTL7	I/O	
104	CE2B/PTE5	I/O		208	AVss	-	Analog ground

● T8F02TB-0102 (X0060A00) SWP50

DM: IC012

PIN NO.	OUTER NO.	NAME	I/O	FUNCTION	PIN NO.	OUTER NO.	NAME	I/O	FUNCTION
1	E5	VSS2	-	Ground	106	E22	VSS2	-	Ground
2	D4	VDDC	-	Power supply +1.5 V	107	D23	VDDC	-	Power supply +1.5 V
3	C3	CD15	I/O	Data bus of internal register	108	C24	HMA15	O	Wave memory address bus
4	B2	CD13	I/O		109	B25	HMA16	O	
5	A1	CD14	I/O		110	A26	HMA22	O	
6	D5	CD6	I/O		111	E23	HMA25	O	
7	E6	CD2	I/O		112	F22	VDDS	-	Power supply +3 V
8	C4	CD9	I/O		113	D24	HMA27	O	Wave memory address bus
9	B3	CD11	I/O		114	C25	HMA0	O	
10	A2	CD12	I/O		115	B26	HMA23	O	
11	A3	CD10	I/O		116	C26	HMA24	O	
12	D6	CD1	I/O		117	F23	VDDS	-	Power supply +3 V
13	E7	VSS	-	Ground	118	G22	HMA26	O	Wave memory address bus
14	C5	CD5	I/O	Data bus of unternal register	119	E24	HMA30	O	
15	B4	CD8	I/O		120	D25	HMA28	O	
16	A4	CD7	I/O		121	D26	HMA29	O	
17	D7	VSS2	-	Ground	122	G23	LMA17	O	Wave memory address bus (Lower data memory)
18	C6	CD0	I/O	Data bus of unternal register	123	F24	LMA19	O	
19	E8	VSS	-	Ground	124	H22	VSS	-	Ground
20	D8	VDDS	-	Power supply +3 V	125	H23	VDDS	-	Power supply +3 V
21	B5	CD4	I/O	Data bus of internal register	126	E25	LMA20	O	Wave memory address bus (Lower data memory)
22	A5	CD3	I/O		127	E26	LMA21	O	
23	C7	CA2	I	Address bus of internal regisuter	128	G24	LMA9	O	
24	B6	CA0	I		129	F25	LMA18	O	
25	E9	CA8	I		130	J22	LMA12	O	
26	D9	CA9	I		131	J23	LMA4	O	
27	C8	CA5	I		132	H24	LMA6	O	
28	A6	CA1	I		133	F26	LMA8	O	
29	B7	CA3	I		134	G25	LMA7	O	
30	A7	CA4	I		135	G26	LMA10	O	
31	E10	VSS2	-	Ground	136	K22	VSS2	-	Ground
32	D10	VDDC	-	Power supply +1.5 V	137	K23	VDDC	-	Power supply +1.5 V
33	C9	CA10	I	Address bus of internal regisuter	138	J24	LMA13	O	Wave memory address bus (Lower data memory)
34	B8	CA6	I		139	H25	LMA11	O	
35	A8	CA7	I		140	H26	LMA5	O	
36	B9	CA11	I		141	J25	LMA3	O	
37	E11	CA14	I		142	L22	LMA16	O	
38	D11	CA15	I		143	L23	LMA0	O	
39	C10	CA13	I		144	K24	LMA2	O	
40	A9	CA12	I		145	J26	LMA14	O	
41	B10	CSN0	I	Chip select	146	K25	LMA15	O	
42	A10	CSN1	I		147	K26	LMA1	O	
43	E12	VSS	-	Ground	148	M22	VSS	-	Ground
44	D12	VDDS	-	Power supply +3 V	149	M23	VDDS	-	Power supply +3 V
45	C11	WRN	I	Write strobe	150	L24	LMA22	O	Wave memory address bus (Lower data memory)
46	B11	RDN	I	Read strobe	151	L25	LMA23	O	
47	A11	WAIT0	O	Hardware wait request	152	L26	LMA24	O	
48	C12	IRQ0	O	Interrupt request	153	M24	LMA27	O	
49	B12	DREQ0	O		154	M25	LMA28	O	
50	E13	TCK	I	Test pin	155	N22	LMA25	O	
51	D13	TRST	I		156	N23	LMA26	O	
52	C13	VSS	-	Ground	157	N24	LMA30	O	
53	A12	XO	O	Crystal osc. output	158	M26	LMA29	O	
54	B13	XI	I	Crystal osc. input	159	N25	MOEN	O	Wave memory output enable
55	A13	VDDS	-	Power supply +3 V	160	N26	MWEN	O	Wave memory write enable
56	A14	SLAVE	I	Master/Slave select	161	P26	LMD15	I/O	Wave memory data bus (Lower 16 bit)
57	E14	TMS	I	Test pin	162	P22	VSS	-	Ground
58	D14	TDO	O		163	P23	VDDS	-	Power supply +3 V
59	C14	ICN	I	Initial clear	164	P24	LMD13	I/O	Wave memory data bus (Lower 16 bit)
60	B14	RFCLK0	O	PLL Clock	165	P25	LMD14	I/O	
61	B15	PLL_TSTN	I	Power supply	166	R25	LMD11	I/O	
62	C15	PLL_BP	I		167	R24	LMD10	I/O	
63	D15	VDDS	-	Power supply +3 V	168	R23	VDDS	-	Power supply +3 V
64	E15	VSS	-	Ground	169	R22	VSS	-	Ground
65	A15	RFCLK1	I	PLL Clock	170	R26	LMD12	I/O	Wave memory data bus (Lower 16 bit)
66	A16	VDDC	-	Power supply +1.5 V	171	T26	LMD9	I/O	
67	B16	TMODE	I	Test pin	172	T25	LMD8	I/O	
68	C16	PLL_AVD	-	Power supply (PLL)	173	T24	LMD7	I/O	
69	D16	NC	-	Not used	174	T23	VSS2	-	Ground
70	E16	NC	-	Not used	175	T22	VSS	-	Ground
71	A17	PLL_AVS	-	Power supply (PLL)	176	U26	LMD6	I/O	Wave memory data bus (Lower 16 bit)
72	B17	TEST1	I	Test pin	177	U25	LMD5	I/O	
73	A18	VSS	-	Ground	178	V26	LMD3	I/O	
74	C17	SY1	I	Sync. clock	179	U24	LMD4	I/O	
75	D17	VDDC	-	Power supply +1.5 V	180	U23	VDDC	-	Power supply +3 V
76	E17	VSS2	-	Ground	181	U22	VSS2	-	Ground
77	B18	KONTRG0	O	Key on data	182	V25	LMD2	I/O	Wave memory data bus (Lower 16 bit)
78	A19	KONTRG1	I		183	W26	LMD0	I/O	
79	C18	CK512	O		184	V24	LMD1	I/O	
80	B19	CK128	O	Master clock (256 Fs)	185	W25	DCSL0	O	
81	D18	BCLK	O	Master clock (64 Fs)	186	V23	VDDS	-	Power supply +3 V
82	E18	SY0	O	Sync. clock	187	V22	VDDC	-	Power supply +1.5 V
83	C19	HMA20	O	Wave memory address bus	188	W24	DCSL1	O	
84	A20	HMA21	O		189	Y26	DQML3	O	
85	B20	HMA19	O		190	Y25	DQML1	O	
86	C20	HMA18	O		191	Y24	DMAL14	O	
87	D19	VDDS	-	Power supply +1.5 V	192	W23	VDDS	-	Power supply +3 V
88	E19	VSS	-	Ground	193	W22	VSS	-	Ground
89	A21	HMA9	O	Wave memory address bus	194	AA26	DMAL13	O	
90	B21	HMA7	O		195	AA25	DMAL12	O	
91	A22	HMA6	O		196	AB26	DMAL9	O	
92	D20	HMA8	O		197	Y23	VSS	-	Ground
93	C21	HMA10	O		198	AA24	DMAL11	O	
94	E20	HMA17	O		199	Y22	VSS	-	Ground
95	D21	VDDS	-	Power supply +1.5 V	200	AA23	DMAL10	O	
96	B22	HMA11	O	Wave memory address bus	201	AB25	DMAL8	O	
97	A23	HMA4	O		202	AC26	DMAL6	O	
98	C22	HMA5	O		203	AB24	DMAL7	O	
99	B23	HMA13	O		204	AC25	DMAL5	O	
100	E21	VSS	-	Ground	205	AA22	VSS2	-	Ground
101	D22	HMA12	O	Wave memory address bus	206	AB23	VSS	-	Ground
102	C23	HMA3	O		207	AC24	DMAL4	O	
103	A24	HMA14	O		208	AD26	DMAL3	O	
104	B24	HMA2	O		209	AD25	DMAL2	O	
105	A25	HMA1	O		210	AE26	DMAL0	O	

PIN NO.	OUTER NO.	NAME	I/O	FUNCTION	PIN NO.	OUTER NO.	NAME	I/O	FUNCTION
211	AB22	VSS2	-	Ground	316	AB5	VSS2	-	Ground
212	AC23	VDDC	-	Power supply +1.5 V	317	AC4	VDDC	-	Power supply +1.5 V
213	AD24	DMAL1	O		318	AD3	MELI6	I	MEL wave data input
214	AE25	DCSL2	O		319	AE2	MELI7	I	
215	AF26	DRAS0	O		320	AF1	ADLR	O	Power supply +3 V
216	AC22	DCAS0	O		321	AB4	DITO	O	
217	AB21	VDDS	-	Power supply +3 V	322	AA5	VSS	-	Ground
218	AD23	DCLKIN	I		323	AC3	AFRM	I/O	
219	AE24	DQML2	O		324	AD2	ACLK	I/O	
220	AF25	DCSL3	O		325	AE1	ADIR	O	
221	AF24	DQML0	O		326	AD1	ADAT0	I/O	
222	AC21	VDDS	-	Power supply +3 V	327	AA4	VDDS	-	Power supply +3 V
223	AB20	VSS	-	Ground	328	Y5	ADAT9	I/O	
224	AD22	DWEN0	O		329	AB3	ADAT3	I/O	
225	AE23	DCLK0	O		330	AC2	ADAT1	I/O	
226	AF23	DCLK1	O		331	AC1	ADAT2	I/O	
227	AC20	DCLKE	O		332	Y4	ADAT10	I/O	
228	AD21	HMD13	I/O	Wave memory data bus (Upper data memory)	333	AA3	ADAT6	I/O	
229	AB19	VSS	-	Ground	334	W5	VSS	-	Ground
230	AC19	VDDS	-	Power supply +3 V	335	W4	VDDS	-	Power supply +3 V
231	AE22	HMD15	I/O		336	AB2	ADAT4	I/O	
232	AF22	HMD14	I/O	Wave memory data bus (Upper data memory)	337	AB1	ADAT5	I/O	
233	AD20	HMD10	I/O		338	Y3	ADAT11	I/O	
234	AE21	HMD12	I/O		339	AA2	ADAT7	I/O	
235	AB18	VDDC	-	Power supply +1.5 V	340	V5	ADAT14	I/O	
236	AC18	VDDS	-	Power supply +3 V	341	V4	ADAT15	I/O	
237	AD19	HMD7	I/O		342	W3	ADAT13	I/O	
238	AF21	HMD11	I/O	Wave memory data bus (Upper data memory)	343	AA1	ADAT8	I/O	
239	AE20	HMD9	I/O		344	Y2	ADAT12	I/O	
240	AF20	HMD8	I/O		345	Y1	TDI	I	
241	AB17	VSS2	-	Ground	346	U5	VSS2	-	Ground
242	AC17	VDDC	-	Power supply +1.5 V	347	U4	VDDC	-	Power supply +1.5 V
243	AD18	HMD4	I/O		348	V3	HRD13	I/O	
244	AE19	HMD6	I/O	Wave memory data bus (Upper data memory)	349	W2	HRD15	I/O	
245	AF19	HMD5	I/O		350	W1	HRD14	I/O	
246	AE18	HMD3	I/O		351	V2	HRD12	I/O	
247	AB16	VSS	-	Ground	352	T5	HRD7	I/O	DRAM data bus
248	AC16	VSS2	-	Ground	353	T4	HRD6	I/O	
249	AD17	HMD1	I/O		354	U3	HRD10	I/O	
250	AF18	HMD2	I/O	Wave memory data bus (Upper data memory)	355	V1	HRD11	I/O	
251	AE17	HMD0	I/O		356	U2	HRD9	I/O	
252	AF17	DCSH0	O		357	U1	HRD8	I/O	
253	AB15	VSS	-	Ground	358	R5	VSS	-	Ground
254	AC15	VDDS	-	Power supply +3 V	359	R4	VDDS	-	Power supply +3 V
255	AD16	DCSH1	O		360	T3	HRD5	I/O	
256	AE16	DQMH3	O		361	T2	HRD4	I/O	
257	AF16	DQMH1	O		362	T1	HRD3	I/O	DRAM data bus
258	AD15	DMAH14	O		363	R3	HRD2	I/O	
259	AE15	DMAH13	O		364	R2	HRD1	I/O	
260	AB14	VSS	-	Ground	365	P5	VDDS	-	Power supply +3 V
261	AC14	VSS2	-	Ground	366	P4	HRD0	I/O	DRAM data bus
262	AD14	DMAH11	O		367	P3	RWEN	O	DRAM write enable
263	AF15	DMAH12	O		368	R1	RQML	O	
264	AE14	DMAH10	O		369	P2	RCAS	O	DRAM column address strobe (RAS signal)
265	AF14	DMAH9	O		370	P1	RRAS	O	DRAM row address strobe (RAS signal)
266	AF13	DMAH8	O		371	N1	RA13	O	DRAM address bus
267	AB13	VDDS	-	Power supply +3 V	372	N5	VDDS	-	Power supply +3 V
268	AC13	VDDS	-	Power supply +3 V	373	N4	VDDS	-	Power supply +3 V
269	AD13	DMAH6	O		374	N3	RA10	O	
270	AE13	DMAH7	O		375	N2	RA12	O	DRAM address bus
271	AE12	DMAH4	O		376	M2	RA1	O	
272	AD12	DMAH3	O		377	M3	RA2	O	
273	AC12	VDDS	-	Power supply +1.5 V	378	M4	VDDS	-	Power supply +3 V
274	AB12	VSS	-	Ground	379	M5	VSS	-	Ground
275	AF12	DMAH5	O		380	M1	RA0	O	
276	AF11	DMAH2	O		381	L1	RA3	O	DRAM address bus
277	AE11	DMAH1	O		382	L2	RA4	O	
278	AD11	DMAH0	O		383	L3	RA5	O	
279	AC11	VSS	-	Ground	384	L4	VSS2	-	Ground
280	AB11	VSS	-	Ground	385	L5	VSS	-	Ground
281	AF10	DRAS1	O		386	K1	RA6	O	
282	AE10	DCSH2	O		387	K2	RA7	O	DRAM address bus
283	AF9	DQMH2	O		388	J1	RA9	O	
284	AD10	DCSH3	O		389	K3	RA8	O	
285	AC10	VDDC	-	Power supply +1.5 V	390	K4	VDDC	-	Power supply +1.5 V
286	AB10	VSS2	-	Ground	391	K5	VSS2	-	Ground
287	AE9	DQMH0	O		392	J2	RA11	O	DRAM address bus
288	AF8	DWEN1	O		393	H1	RCLK	O	
289	AD9	DCAS1	O		394	J3	RCLKE	O	
290	AE8	DCLK2	O		395	H2	RCLKIN	I	
291	AC9	VDDS	-	Power supply +3 V	396	J4	VDDS	-	Power supply +3 V
292	AB9	VDDC	-	Power supply +1.5 V	397	J5	VDDC	-	Power supply +1.5 V
293	AD8	DCLK3	O		398	H3	RQMH	O	
294	AF7	MELO0	O		399	G1	LRD15	I/O	
295	AE7	MELO1	O	MEL wave data output	400	G2	LRD14	I/O	DRAM data bus (Lower data)
296	AD7	MELO2	O		401	G3	LRD13	I/O	
297	AC8	VDDS	-		402	H4	VDDS	-	Power supply +3 V
298	AB8	VSS	-	Ground	403	H5	VSS	-	Ground
299	AF6	MELO3	O		404	F1	LRD12	I/O	
300	AE6	MELO4	O		405	F2	LRD11	I/O	DRAM data bus (Lower data)
301	AF5	MELO5	O	MEL wave data output	406	E1	LRD8	I/O	
302	AC7	MELO6	O		407	G4	VDDS	-	Ground
303	AD6	MELO7	O		408	F3	LRD10	I/O	DRAM data bus (Lower data)
304	AB7	WCLK0	O	For DAC LR clock	409	G5	VDDS	-	Ground
305	AC6	WCLK1	O		410	F4	LRD9	I/O	
306	AE5	EIRQ	O		411	E2	LRD7	I/O	
307	AF4	EICN	O		412	D1	LRD5	I/O	DRAM data bus (Lower data)
308	AD5	ESDA	I/O		413	E3	LRD6	I/O	
309	AE4	ESCL	I/O		414	D2	LRD4	I/O	
310	AB6	MELI0	I		415	F5	VSS2	-	Ground
311	AC5	MELI1	I		416	E4	VSS	-	Ground
312	AD4	MELI2	I	MEL wave data input	417	D3	LRD3	I/O	
303	AF3	MELI3	I		418	C1	LRD2	I/O	DRAM data bus (Lower data)
314	AE3	MELI4	I		419	C2	LRD1	I/O	
315	AF2	MELI5	I		420	B1	LRD0	I/O	

- **µPD780031AYGK-N01-9ET** (XZ916100) **LED DRIVER/SWITCH SCAN**
- **µPD780031AYGK-N02-9ET** (X0031100) **LKS**

DRV: IC001,2
EMKS49A UK: IC001
EMKS49B LK: IC001

PIN NO.	NAME	I/O	FUNCTION	PIN NO.	NAME	I/O	FUNCTION
1	P50/A8	I/O	Port 5 / Higher address bus	33	P10/ANI0	I	Port 1 / A/D converter analog input
2	P51/A9	I/O		34	AV_{REF}	I	A/D converter reference voltage input
3	P51/A10	I/O		35	AV_{DD}	-	Analog power supply
4	P53/A11	I/O		36	$\overline{RESET}$	I	System reset input
5	P54/A12	I/O		37	XT2	-	Subsystem clock oscillation
6	P55/A13	I/O		38	XT1	I	
7	P56/A14	I/O		39	IC	-	Internally connected
8	P57/A15	I/O		40	X2	-	Main system clock oscillation
9	Vss0	-	Ground	41	X1	I	
10	$V_{DD}0$	-	Power supply	42	Vss1	-	Ground
11	P30	I/O	Port 3	43	P00/INTP0	I/O	Port 0 / External interrupt request input
12	P31	I/O		44	P01/INTP1	I/O	
13	P32/SDA0	I/O	Port 3 / Serial data input/output	45	P02/INTP2	I/O	
14	P33/SCL0	I/O	Port 3 / Serial clock input/output	46	P03/INTP3/ADTRG	I/O	Port 0 / External interrupt request input / Trigger signai input
15	P34	I/O	Port 3	47	P70/TI00/TO0	I/O	Port 7 / External count clock input / 16-bit timer/event counter 0 output
16	P35	I/O		48	P71/TI01	I/O	Port 7 / Capture trigger input
17	P36	I/O		49	P72/TI50/TO50	I/O	Port 7 / External count clock input / 8-bit timer/event counter 50 output
18	P20/SI30	I/O	Port 2 / Serial data input	50	P73/TI51/TO51	I/O	Port 7 / External count clock input / 8-bit timer/event counter 51 output
19	P21/SO30	I/O	Port 2 / Serial data output	51	P74/PCL	I/O	Port 7 / Clock output
20	P22/$\overline{SCK30}$	I/O	Port 2 / Serial clock input/output	52	P75/BUZ	I/O	Port 7 / Buzzer output
21	P23RxD0	I/O	Port 2 / Serial data input	53	P64/$\overline{RD}$	I/O	Port 6 / Strobe signal output for reading
22	P24/TxD0	I/O	Port 2 / Serial data output	54	P65/$\overline{WR}$	I/O	Port 6 / Strobe signal output for writing
23	P25/ASCK0	I/O	Port 2 / Serial clock input/output	55	P66/$\overline{WAIT}$	I/O	Port 6 / Wait insertion
24	$V_{DD}1$	-	Power supply	56	P67/ASTB	I/O	Port 6 / Strobe output
25	AVss	-	Ground	57	P40/AD0	I/O	Port 4 / Lower address/data bus
26	P17/ANI7	I	Port 1 / A/D converter analog input	58	P41/AD1	I/O	
27	P16/ANI6	I		59	P42/AD2	I/O	
28	P15/ANI5	I		60	P43/AD3	I/O	
29	P14/ANI4	I		61	P44/AD4	I/O	
30	P13/ANI3	I		62	P45/AD5	I/O	
31	P12/ANI2	I		63	P46/AD6	I/O	
32	P11/ANI1	I		64	A47/AD7	I/O	

■ IC BLOCK DIAGRAM

● **HD74LS09FPEL** (XP642A00)
Quad 2 Input AND
DM: IC004

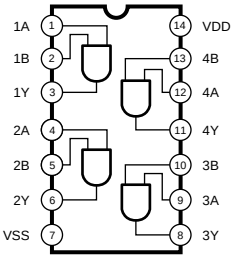

● **TC74VHC14FT** (XV890A00)
Hex Inverter
DM: IC006

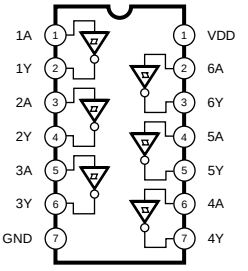

● **HD74LVC245ATELL** (XW148A00)
TC74VHCT245AFT (XT744A00)
74LVC245APW (XZ286A00)
Octal 3-State Bus Transceiver
DM: IC005,009,010,011

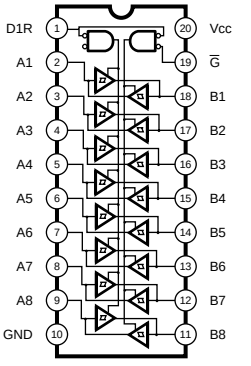

● **SN75C1168NSR** (XU073A00)
Line Driver/Receiver
TO HOST: IC002

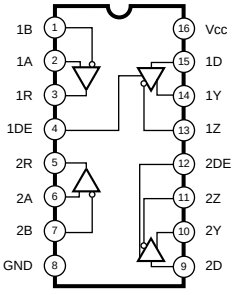

● **TC7SU04F** (XY447A00)
Inverter Gate
TO HOST: IC001

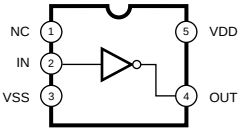

● **M5227P** (XF751A00)
5-Band Graphic Equalizer
EQ: IC001,002

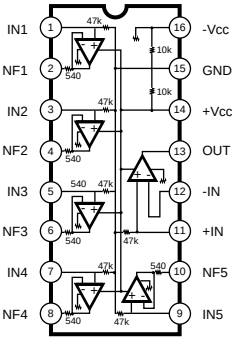

● **µPC4570G2** (XF291A00)
µPC4570C (XC510A00)
Dual Operational Amplifier
DM: IC017,018
PU: IC004
PN1,PN2: IC401

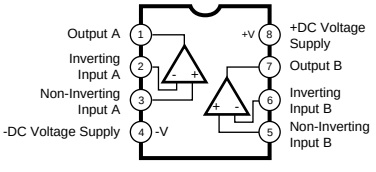

■ CIRCUIT BOARD CONTENTS

ACC (X0251A0) ····· 41
CP1 (X0254B0) ····· 39/40
CP2 (X0254B0) ····· 39/40
CP3 (X0254B0) ····· 39/40
DM (XZ592G0) ····· 29/30
DM (XZ592H0) ····· 31/32
DRV (X0162C0) ····· 28
EMKS49A (X0092C0) ····· 34
EMKS49B (X0092C0) ····· 34
EQ (X0174B0) ····· 34
EXP (XK430C0) ····· 42
INLET (X0337B0) ····· 42
LCD (X0261A0) ····· 41
MIDI (X0091A0) ····· 41
MVR (X0160D0) ····· 36/37
NW (X0253B0) ····· 34
PKH (XH847A0) ····· 43
PKL (XM405A0) ····· 44
PN1 (X0160D0) ····· 35/37
PN2 (X0160D0) ····· 36/37
PRM (X0336B0) ····· 43
PU (X0153E0) ····· 33
SWPS (X0154B0) ····· 42
TA (X0179B0) ····· 34
TEMPO (X0160D0) ····· 6/37 ····· 3
TO HOST (X0090A0) ····· 41

Note: See parts list for details of circuit board component parts.

■ CIRCUIT BOARD

● DRV Circuit board

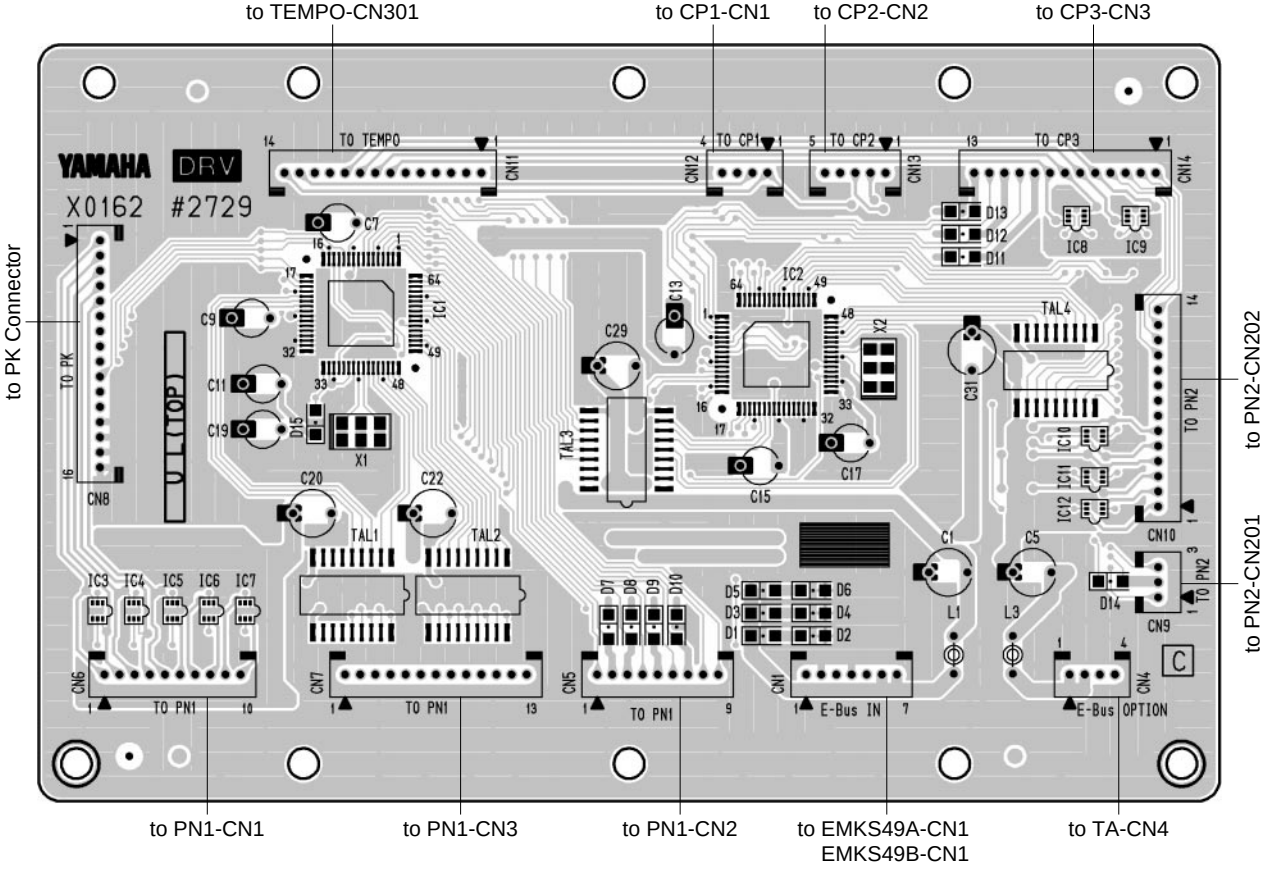

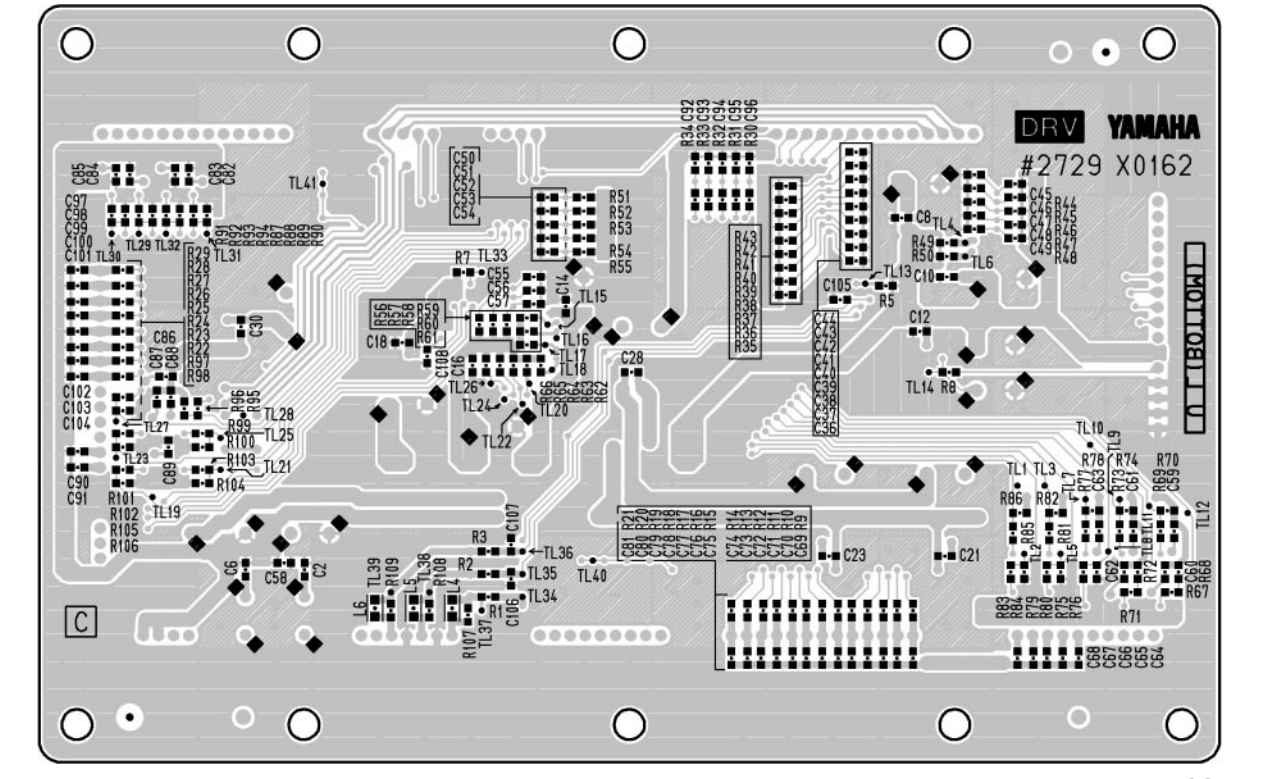

- DM Circuit board (XZ592G0)

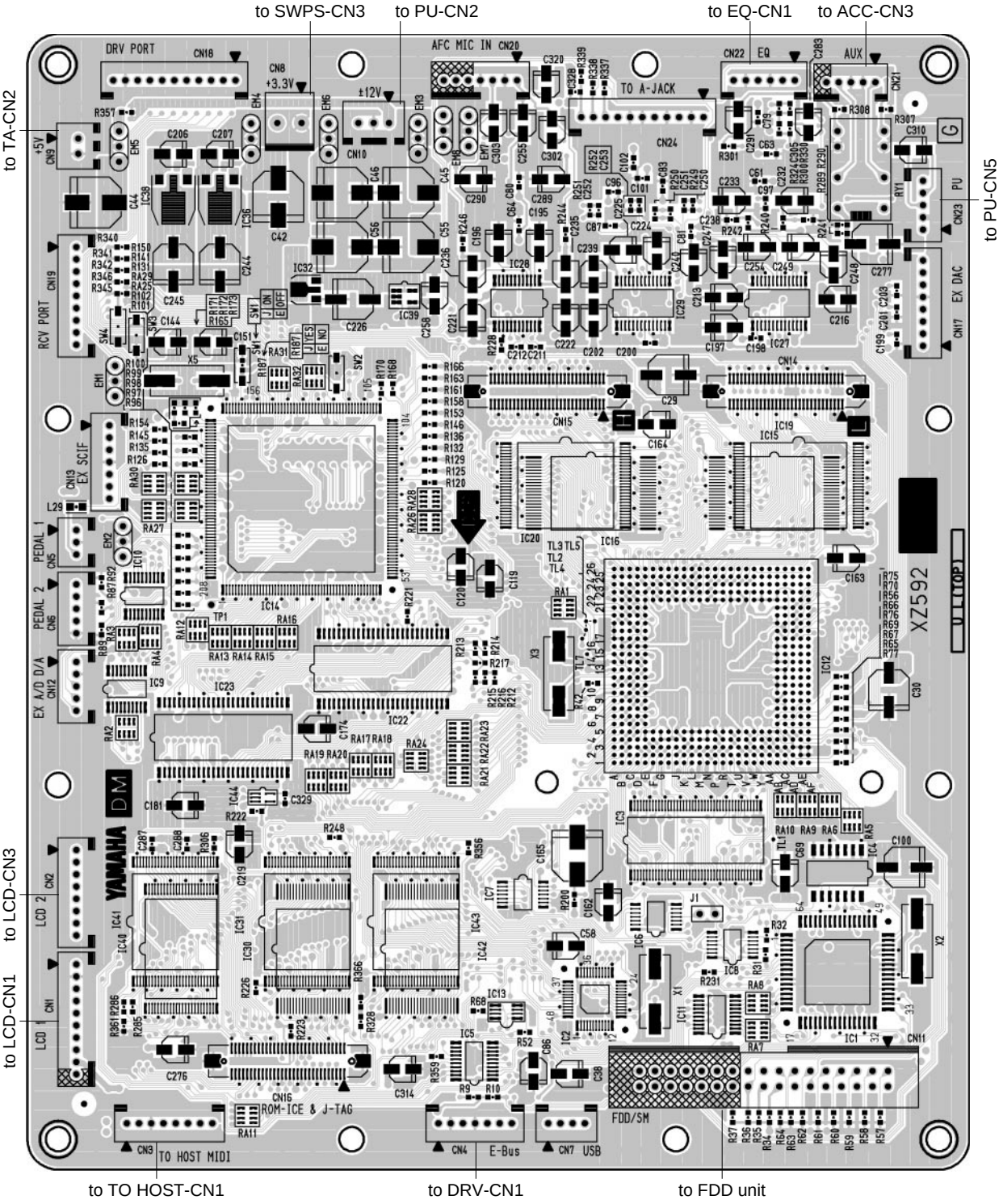

MODEL	SW1
J	ON
Q, V	OFF

Component side

- DM Circuit board

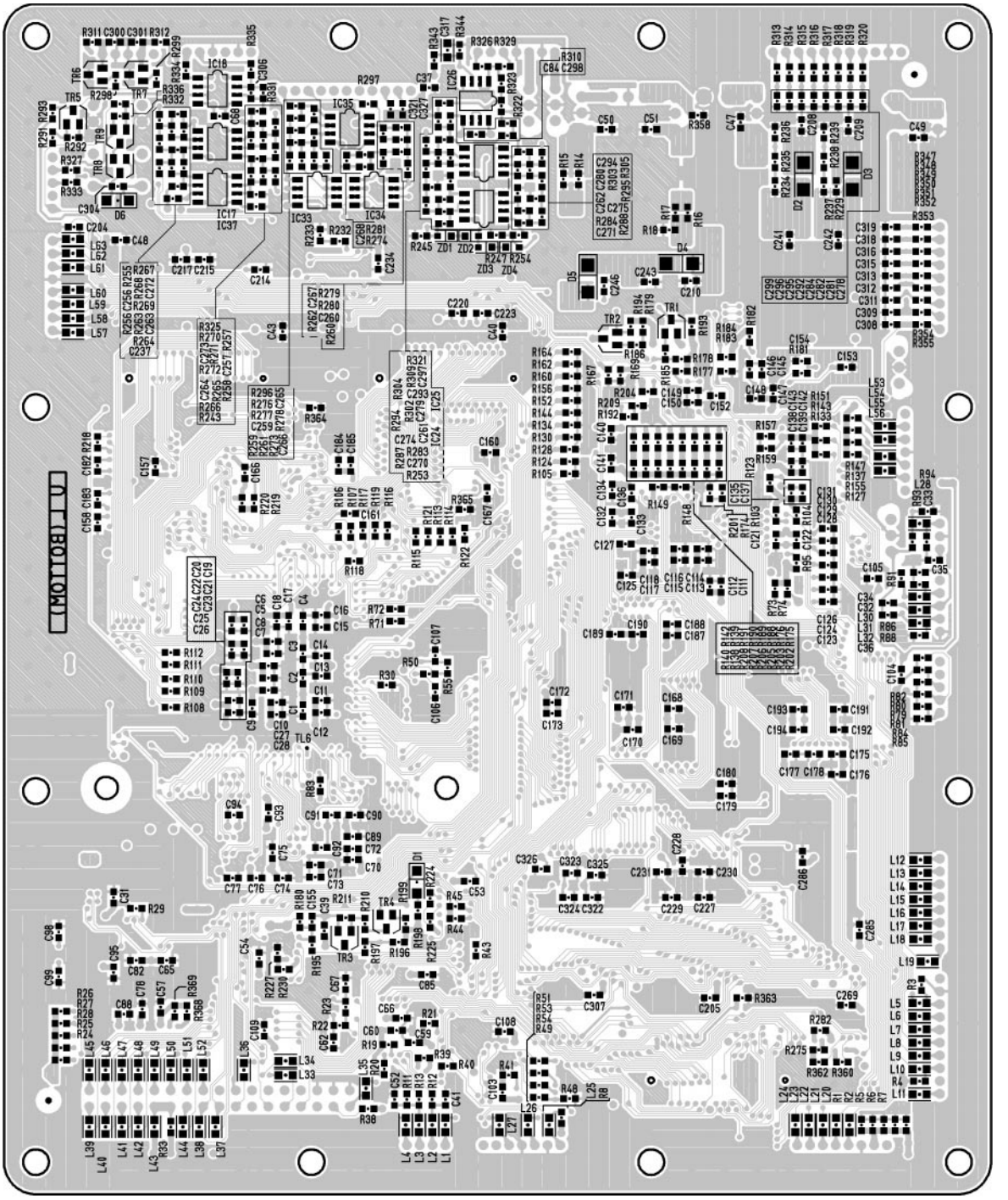

Pattern side

- DM Circuit board (XZ592H0)

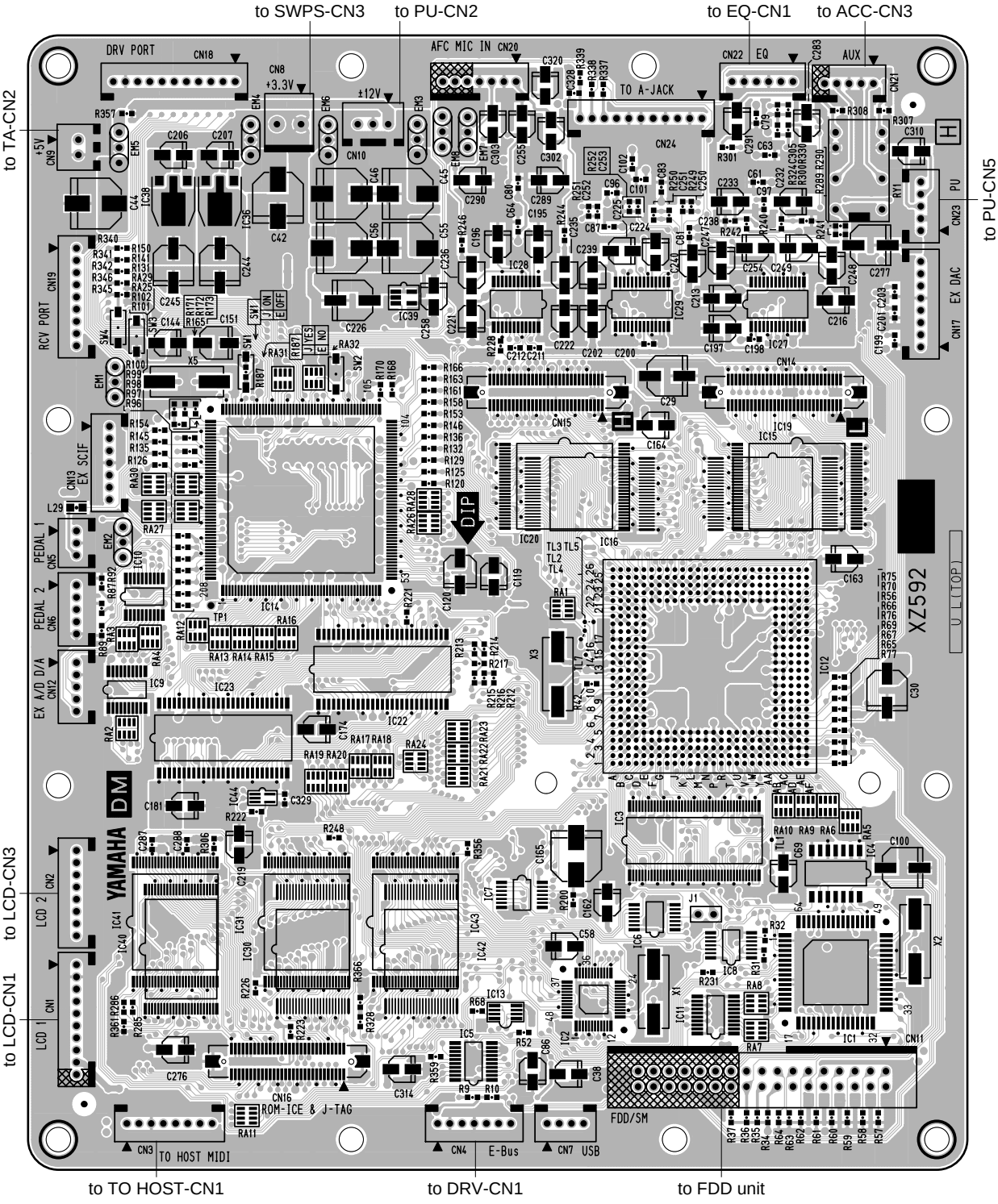

MODEL	SW1
J	ON
Q, V	OFF

Component side

- DM Circuit board

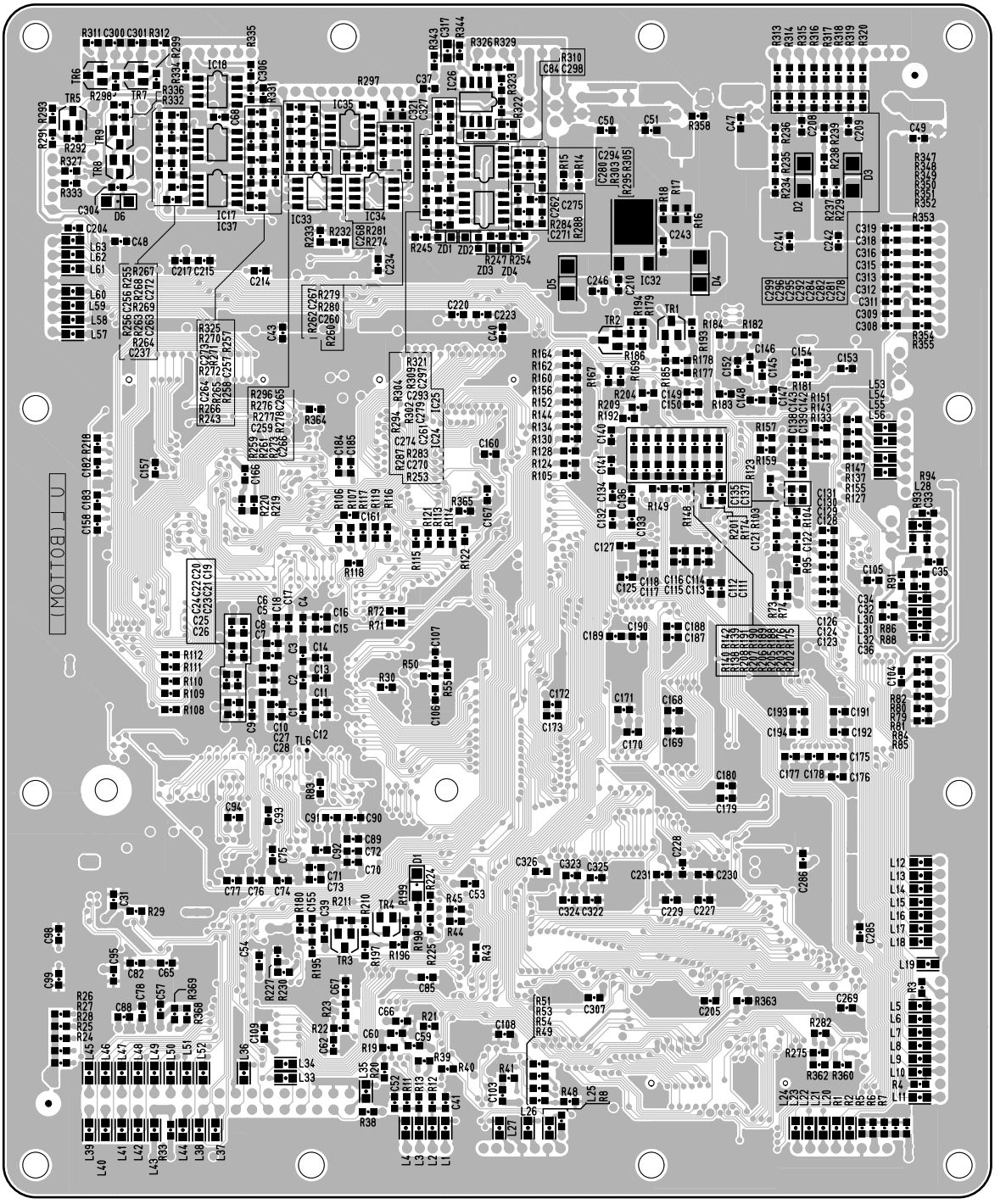

Pattern side

- PU Circuit board

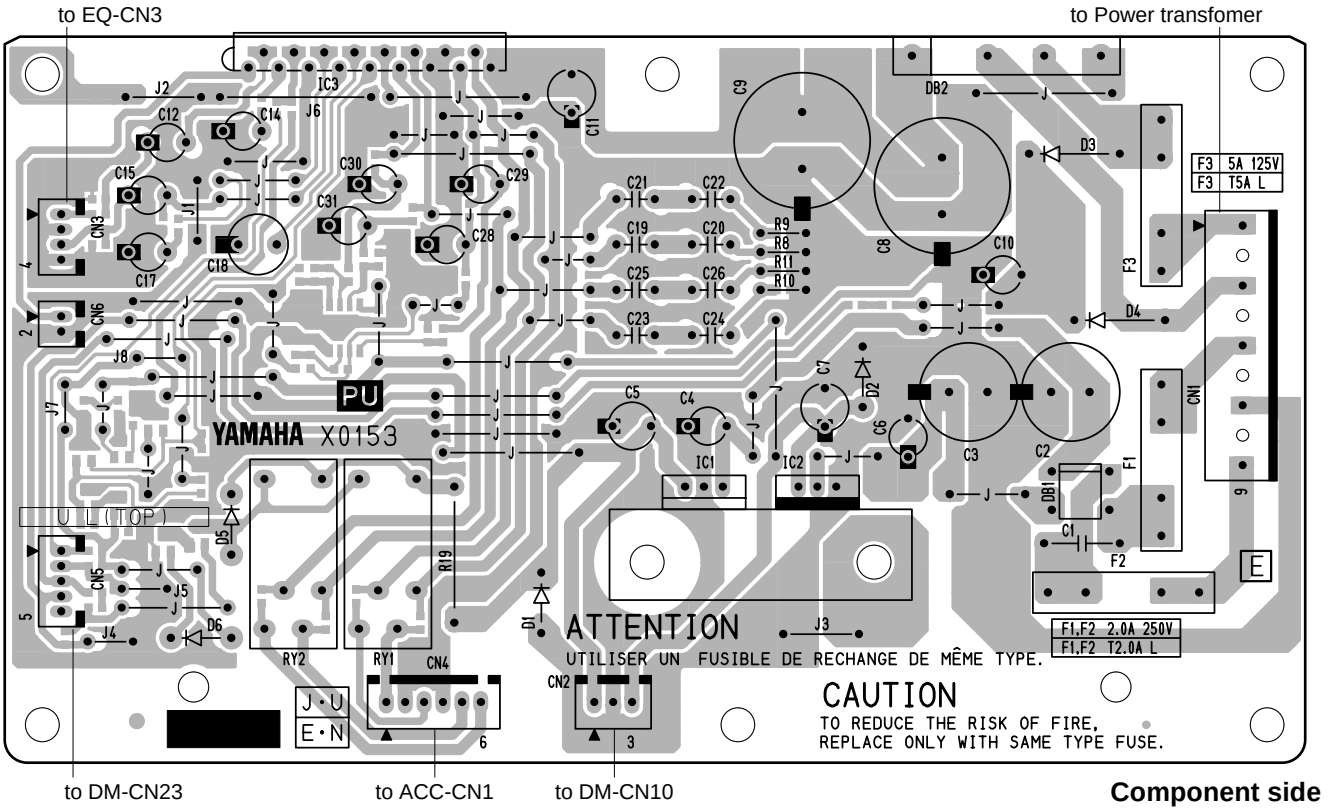

Component side

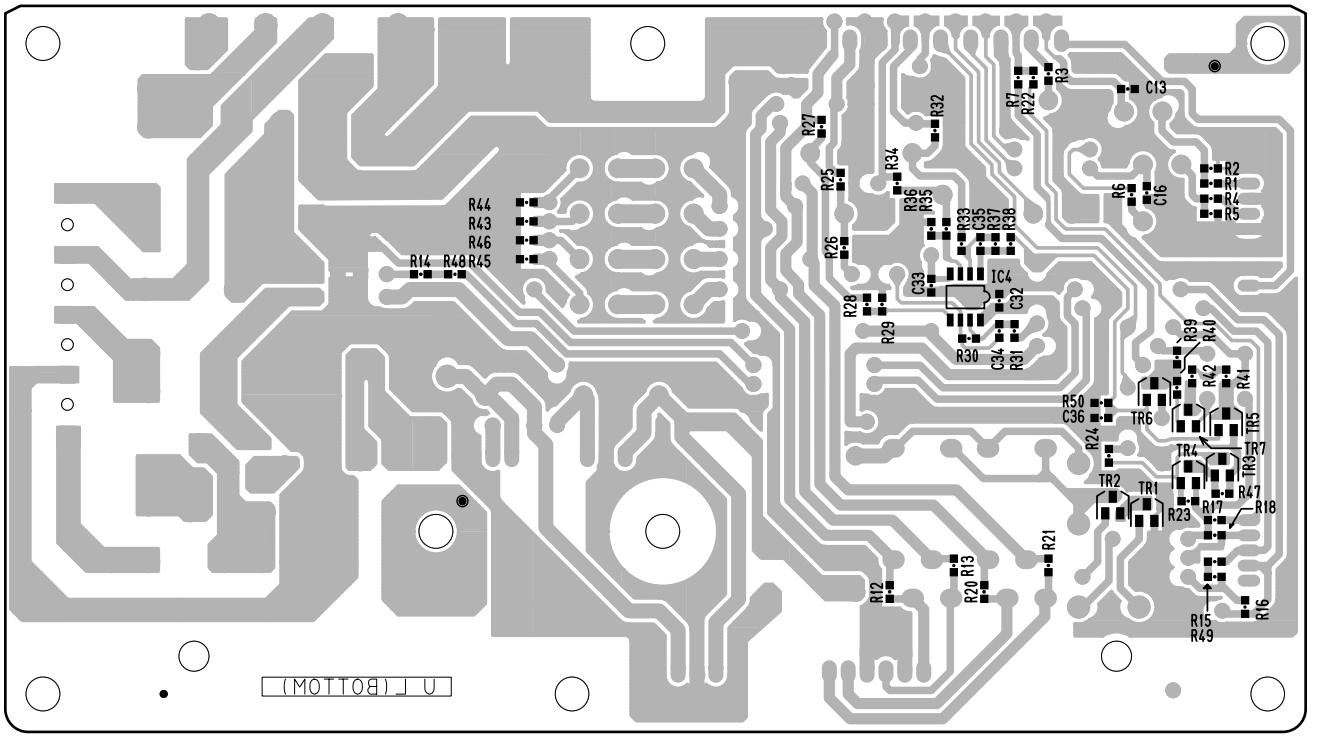

Pattern side

● EMKS49A, EMKS49B Circuit board

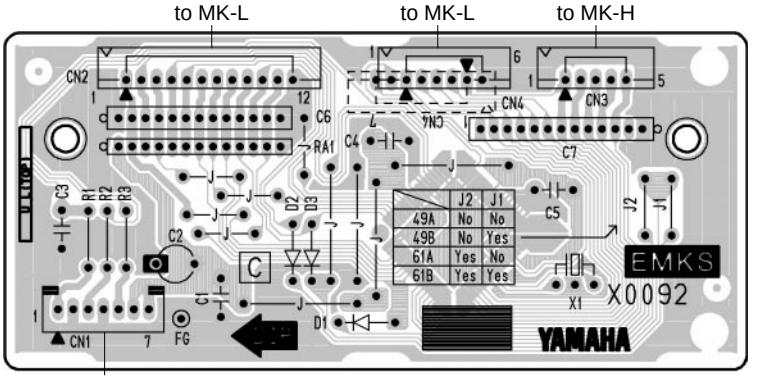

Component side

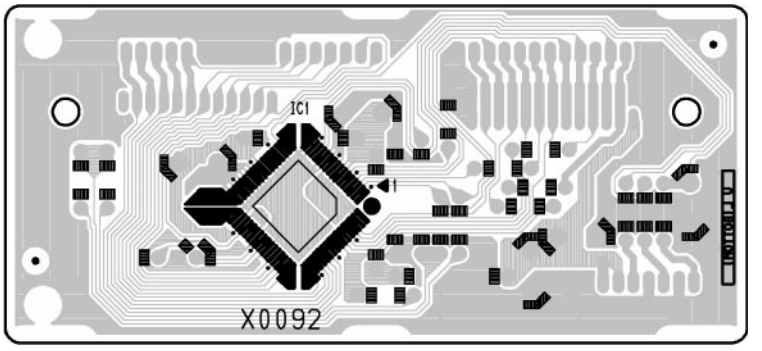

Pattern side

● NW Circuit board

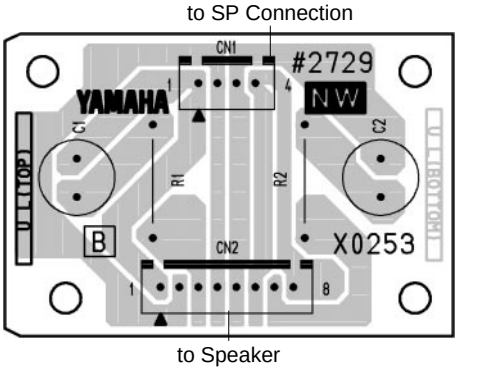

Component side

● TA Circuit board

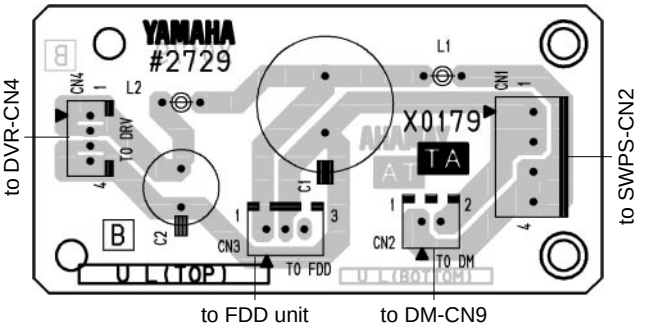

Component side

● EQ Circuit board

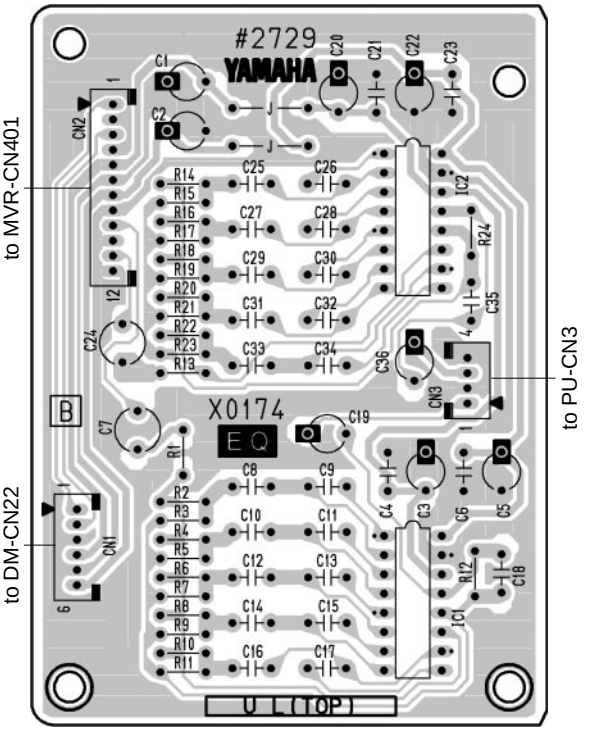

Component side

EMKS49A, EMKS49B: 2NAKZ-V766280⚠
NW: 2NA-V776350
TA: 2NA-V776410
EQ: 2NA-V773310

● PN1 Circuit board

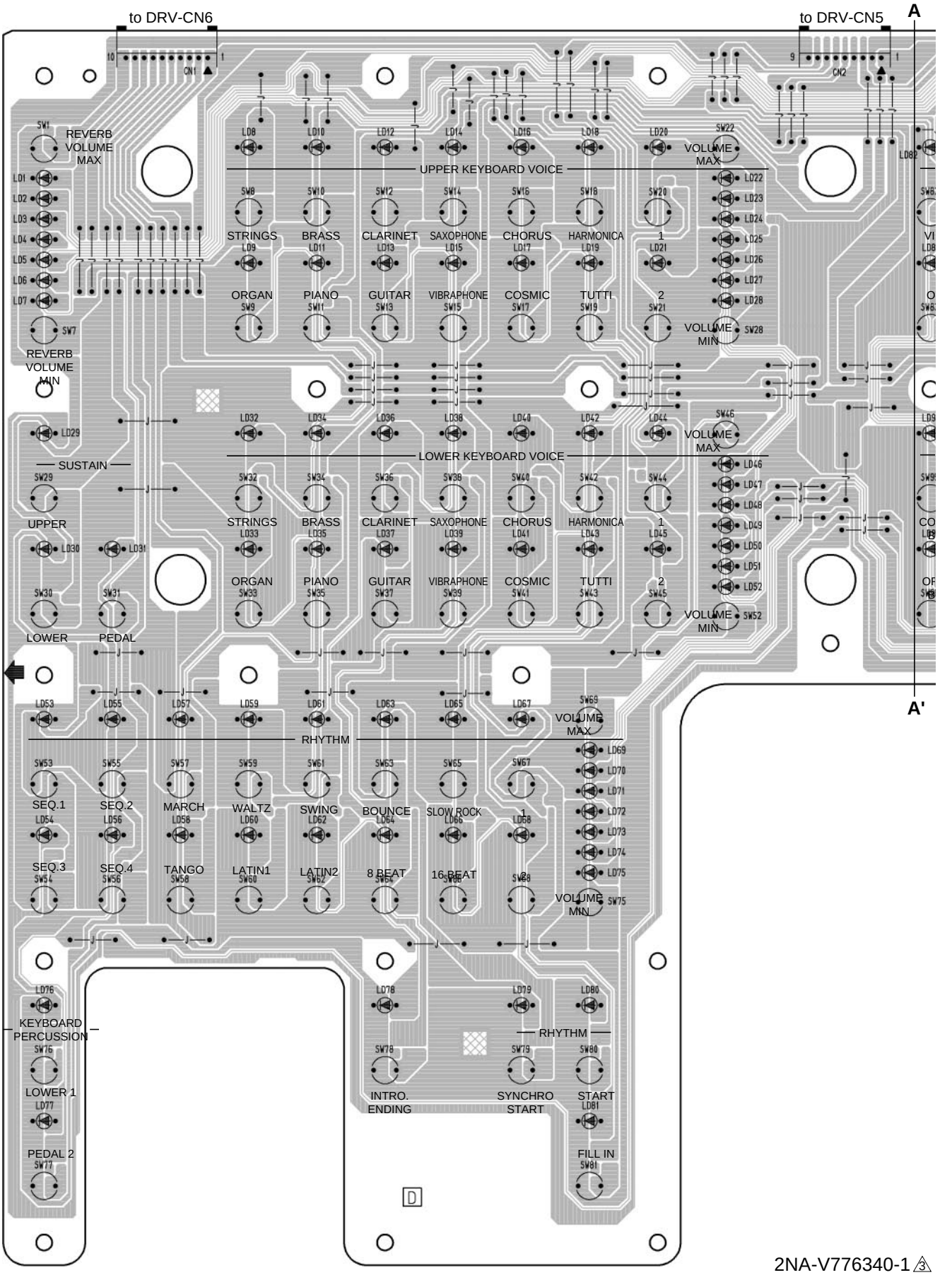

2NA-V776340-1 ③

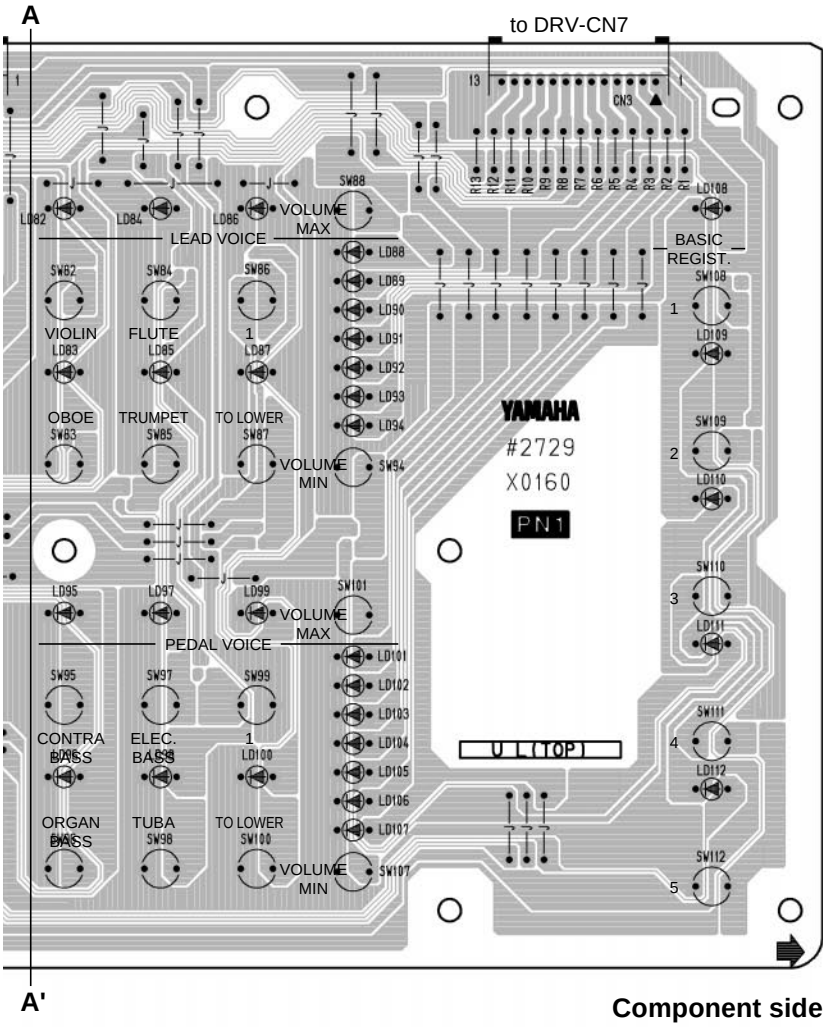

Component side

● MVR Circuit board

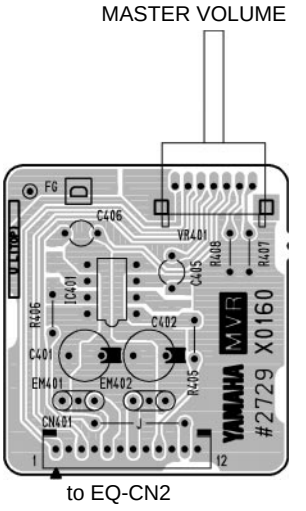

Component side

● TEMPO Circuit board

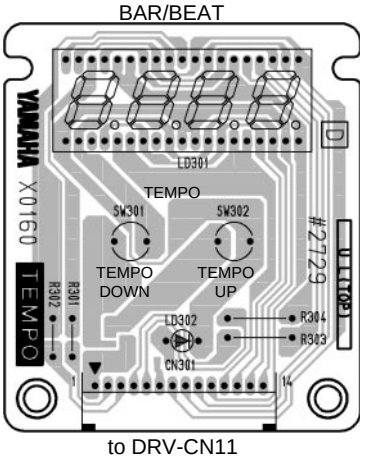

Component side

● PN2 Circuit board

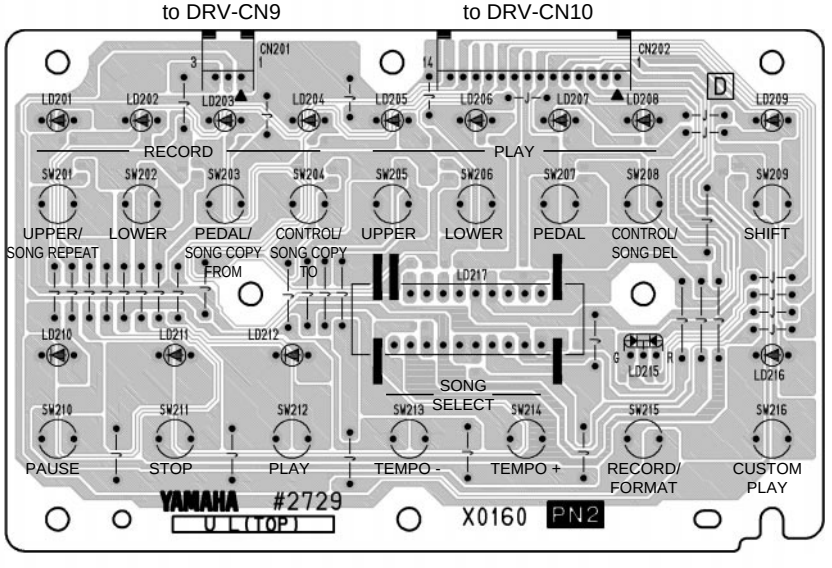

Component side

PN1, PN2, MVR, TEMPO: 2NA-V776340-1△3

● MVR Circuit board

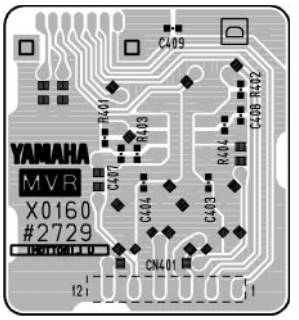

Pattern side

● PN1 Circuit board

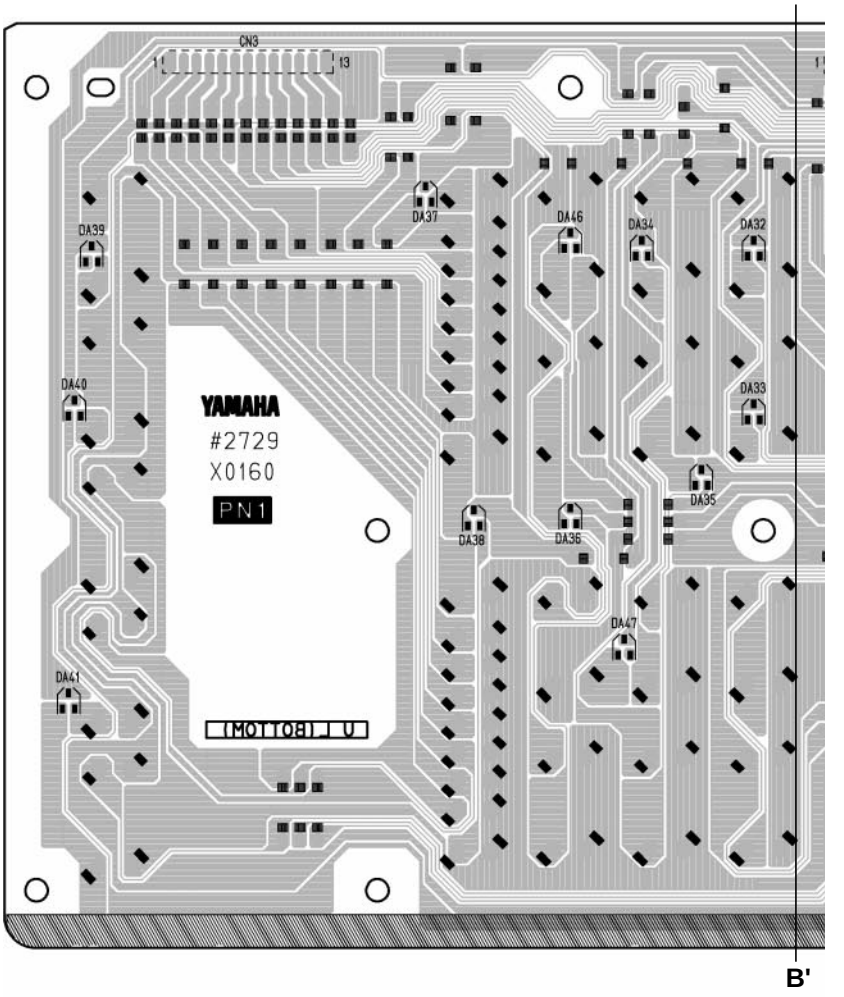

● TEMPO Circuit board

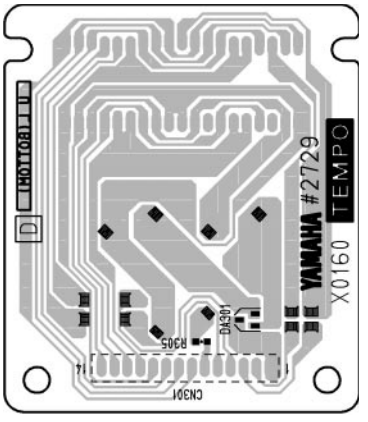

Pattern side

● PN2 Circuit board

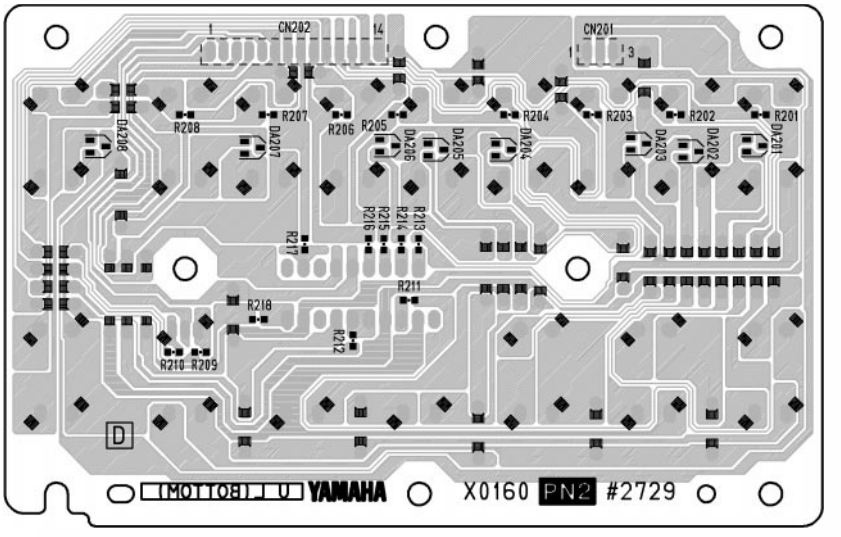

Pattern side

PN1, PN2, MVR, TEMPO: 2NA-V776340-2⚠1

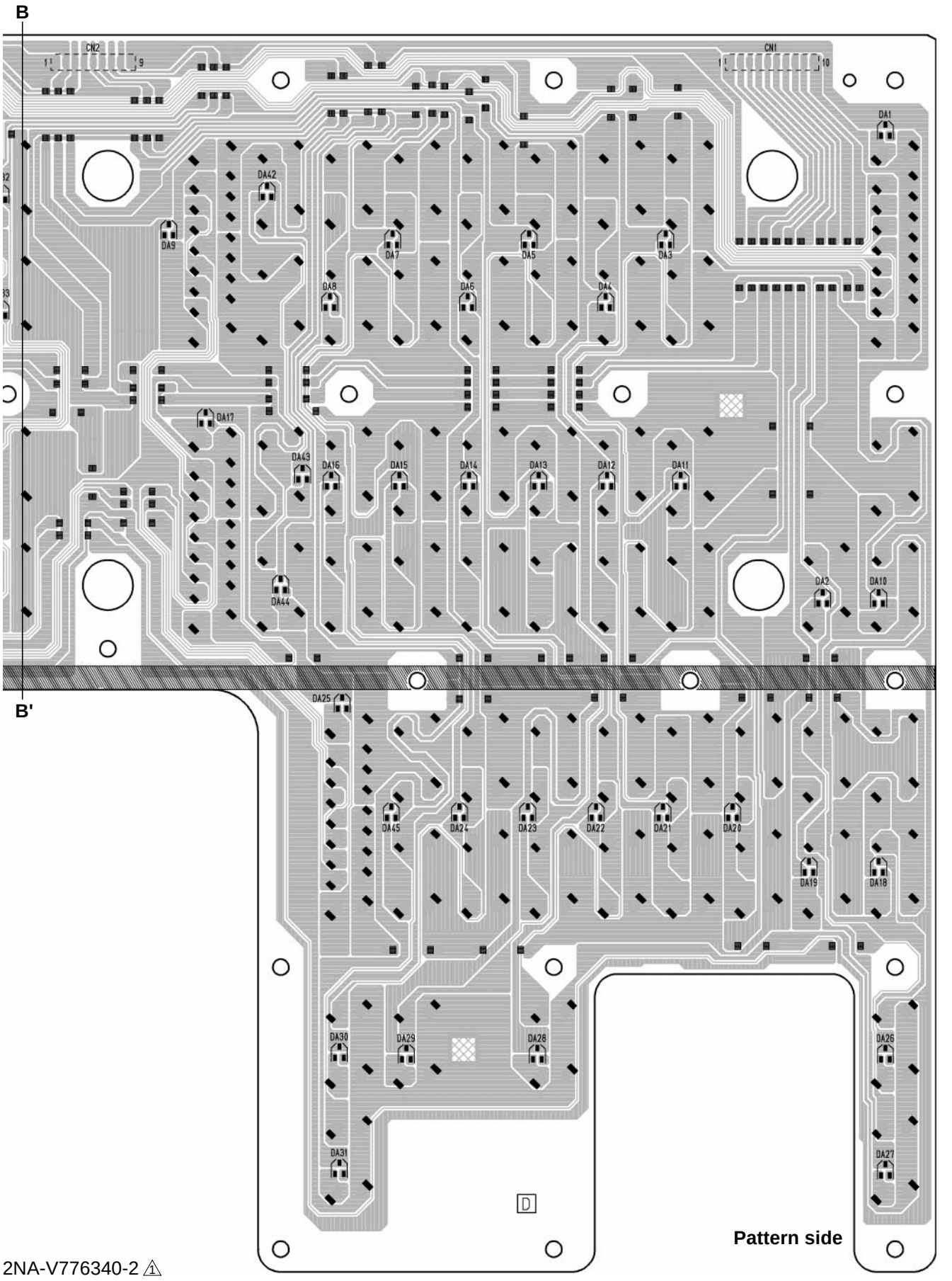

2NA-V776340-2 ⚠1

● CP1 Circuit board

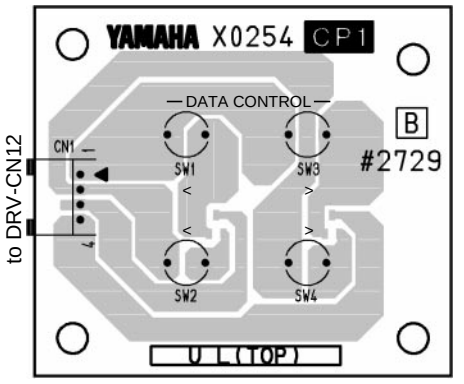

Component side

● CP2 Circuit board

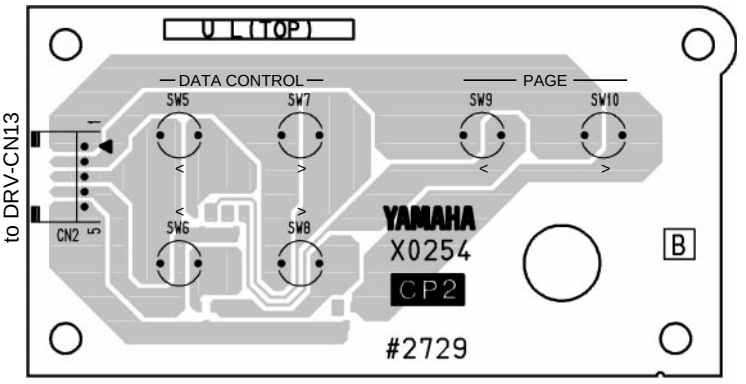

Component side

● CP3 Circuit board

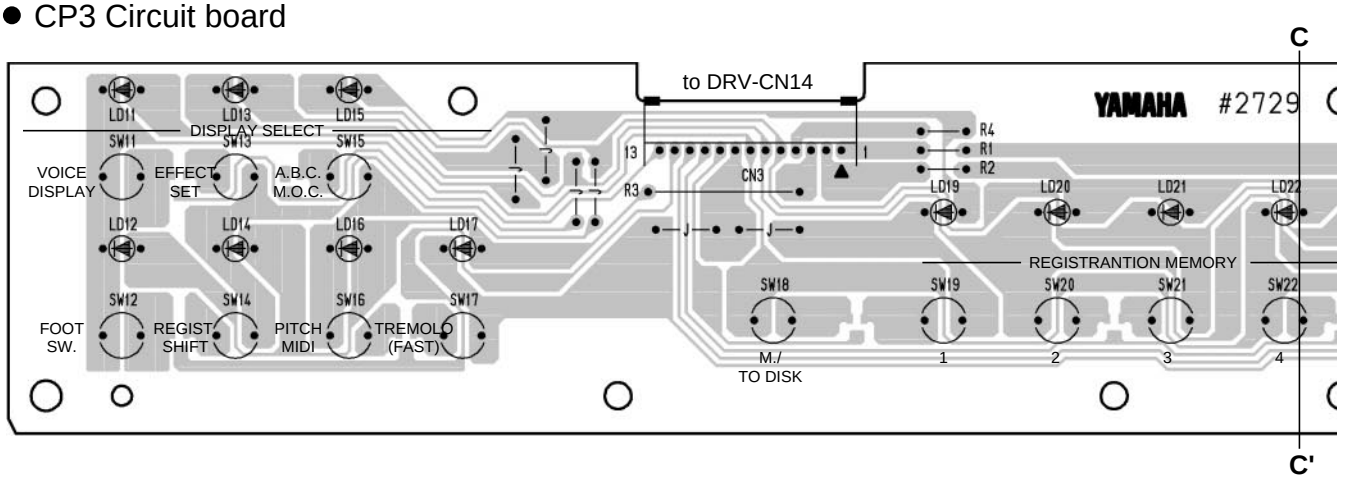

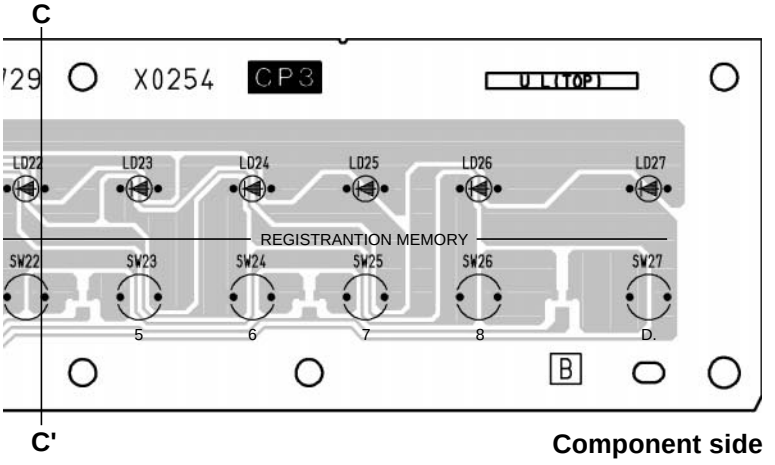

Component side

● CP1 Circuit board

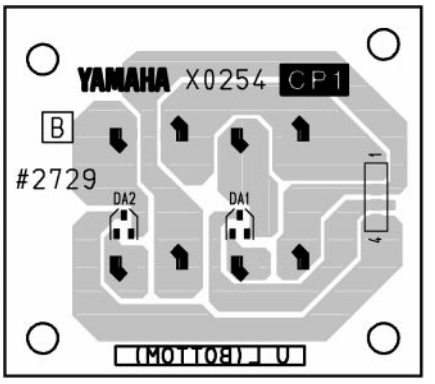

Pattern side

● CP2 Circuit board

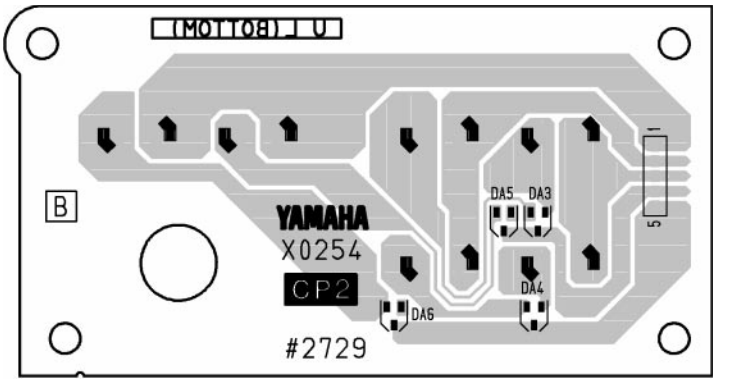

Pattern side

● CP3 Circuit board

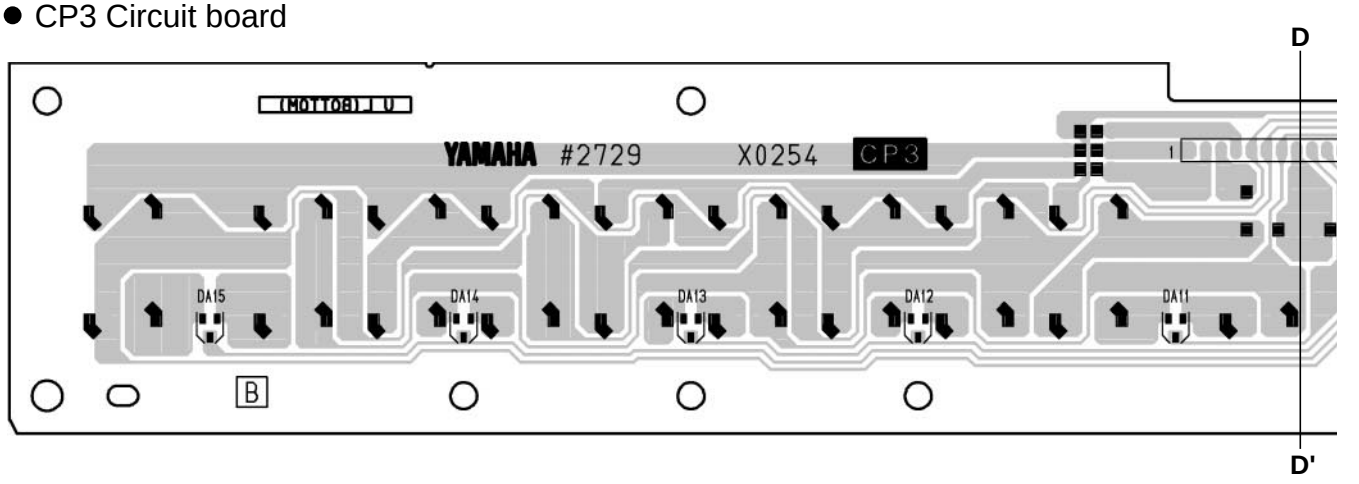

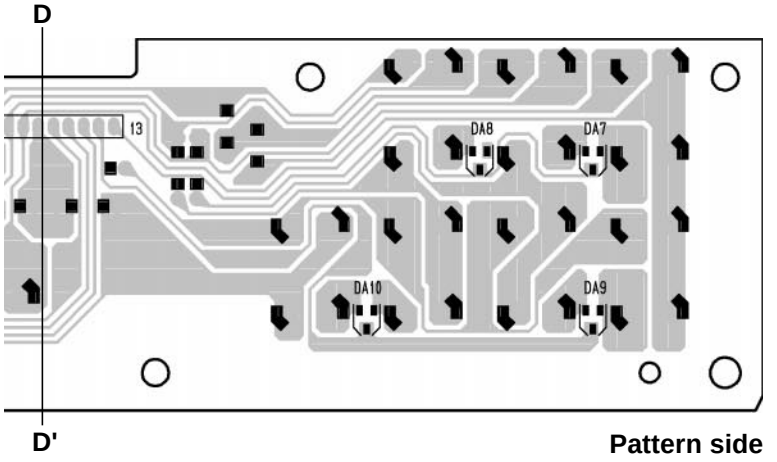

Pattern side

CP1, CP2, CP3: 2NA-V771300-2

● ACC Circuit board

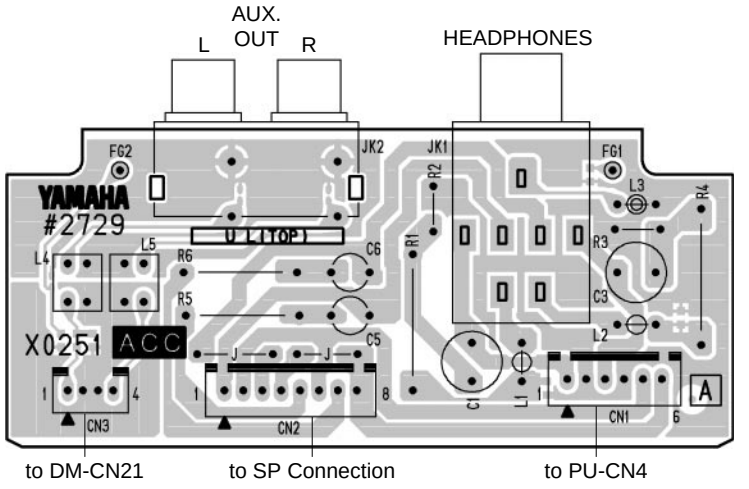

Component side

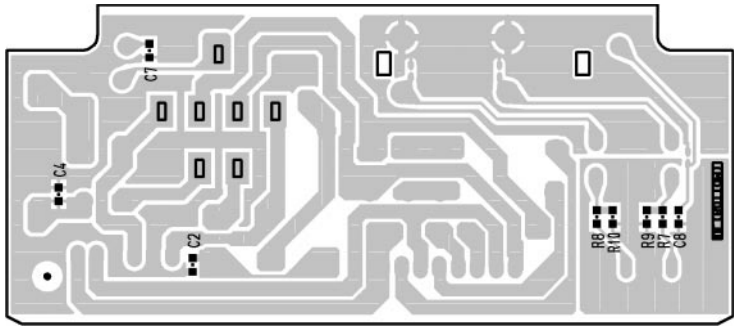

Pattern side

● LCD Circuit board

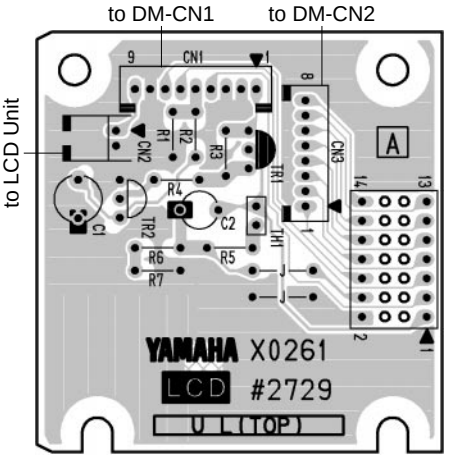

Component side

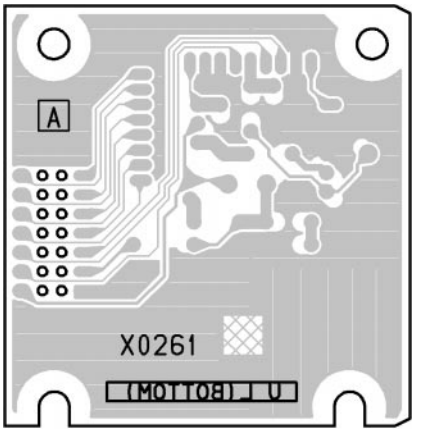

Pattern side

● TO HOST Circuit board

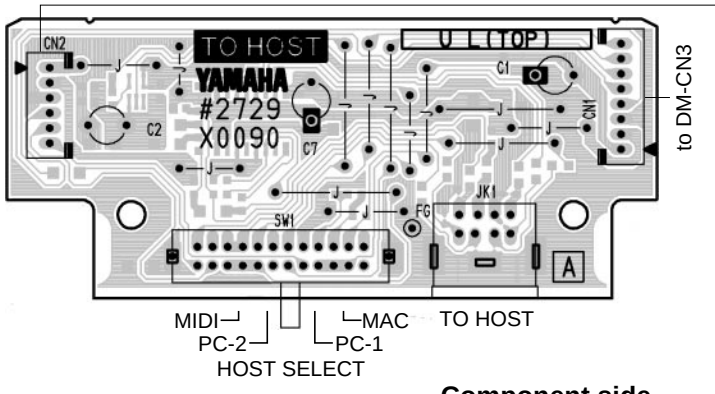

Component side

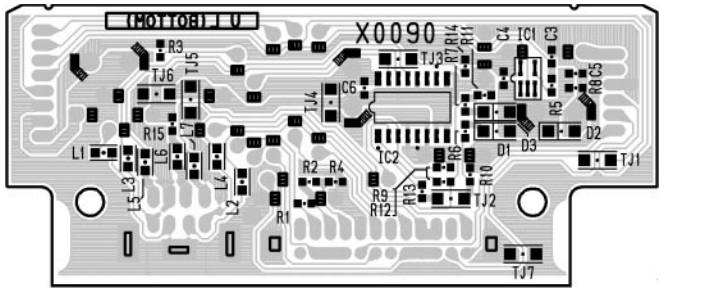

Pattern side

● MIDI Circuit board

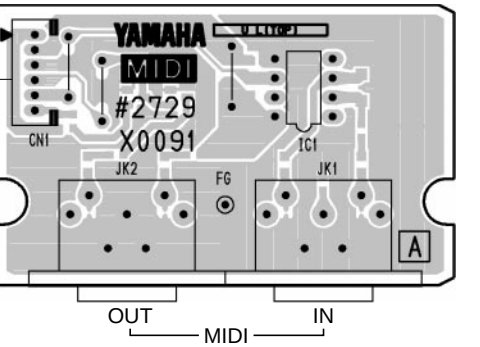

Component side

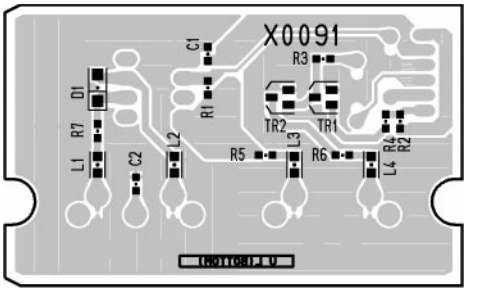

Pattern side

ACC: 2NA-V773410 LCD: 2NA-V766090
TO HOST: 2NA-V755290 MIDI: 2NA-V755270

● INLET Circuit board

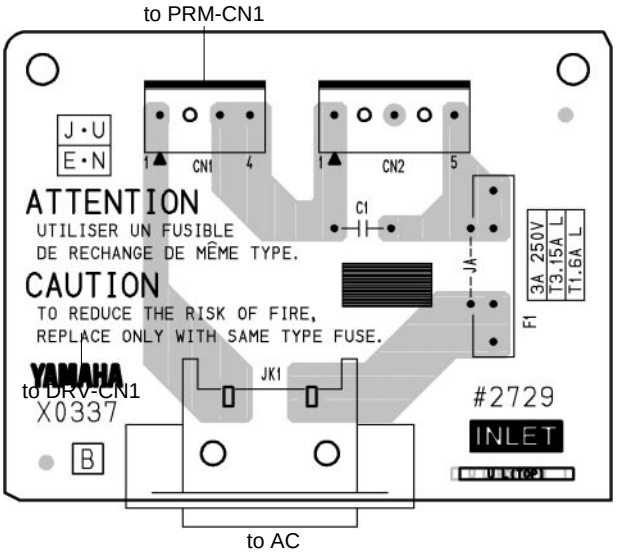

Component side

MODEL	JK1	CN1	CN2	F1	C1	JA
J	NON-POLAR	○	×	3.0A	J	×
Q	NON-POLAR	○	×	T 1.6A	J	×
V	POLAR	○	×	T 3.15A	J	×

○: installed ×: not installed

● EXP Circuit board

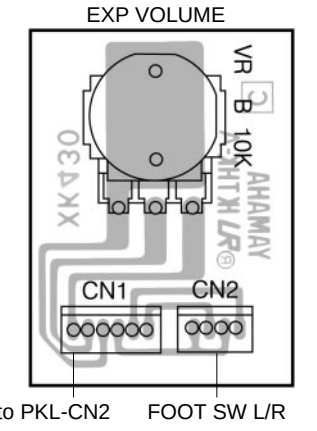

Component side

● SWPS Circuit board

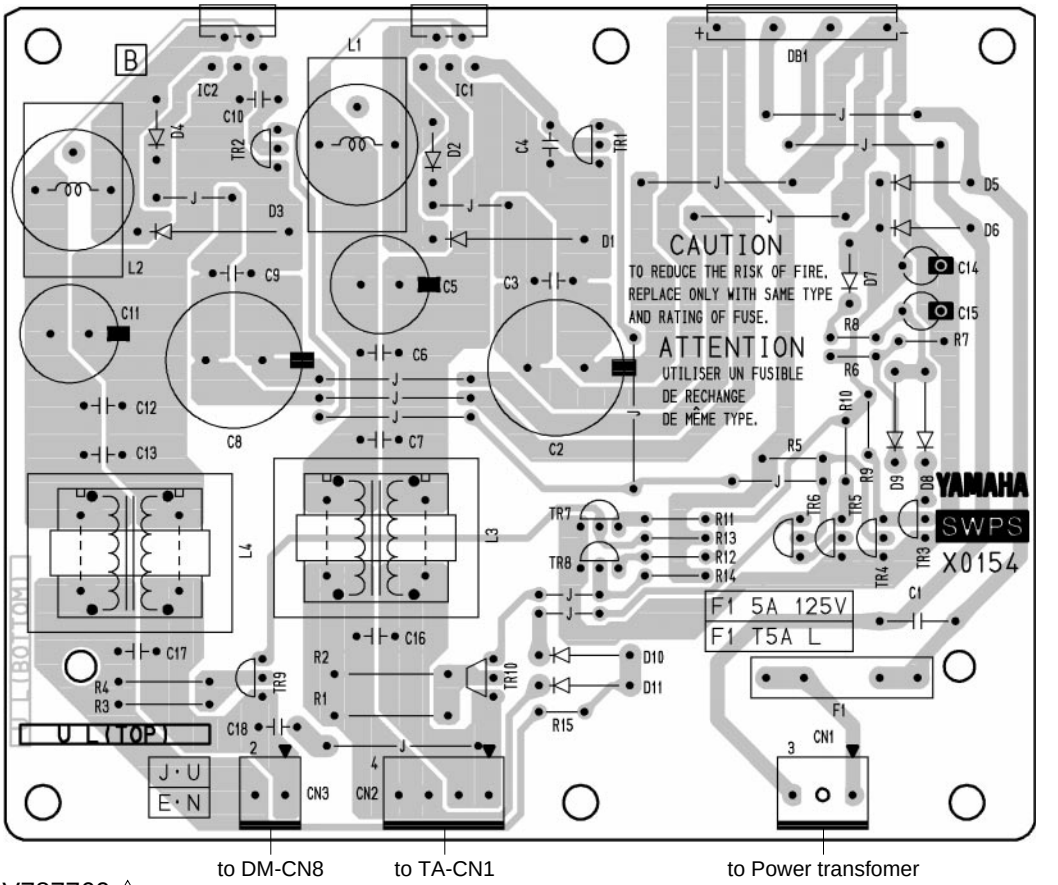

Component side

INLET: 2NA-V787760 ⚠1
EXP: 2NA-VN56470 ⚠1
SWPS: 2NA-V780670

● PKH Circuit board

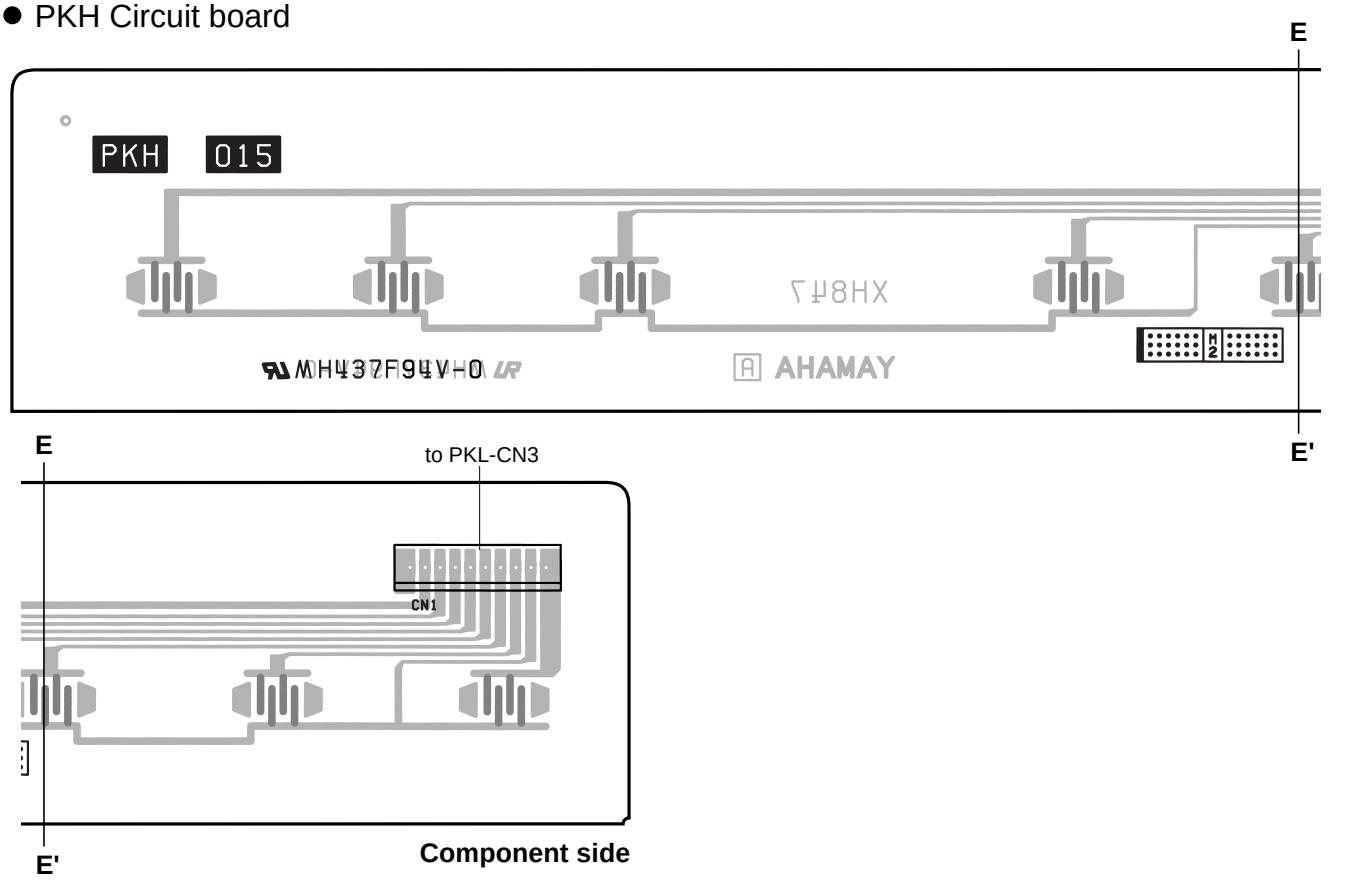

● PRM Circuit board

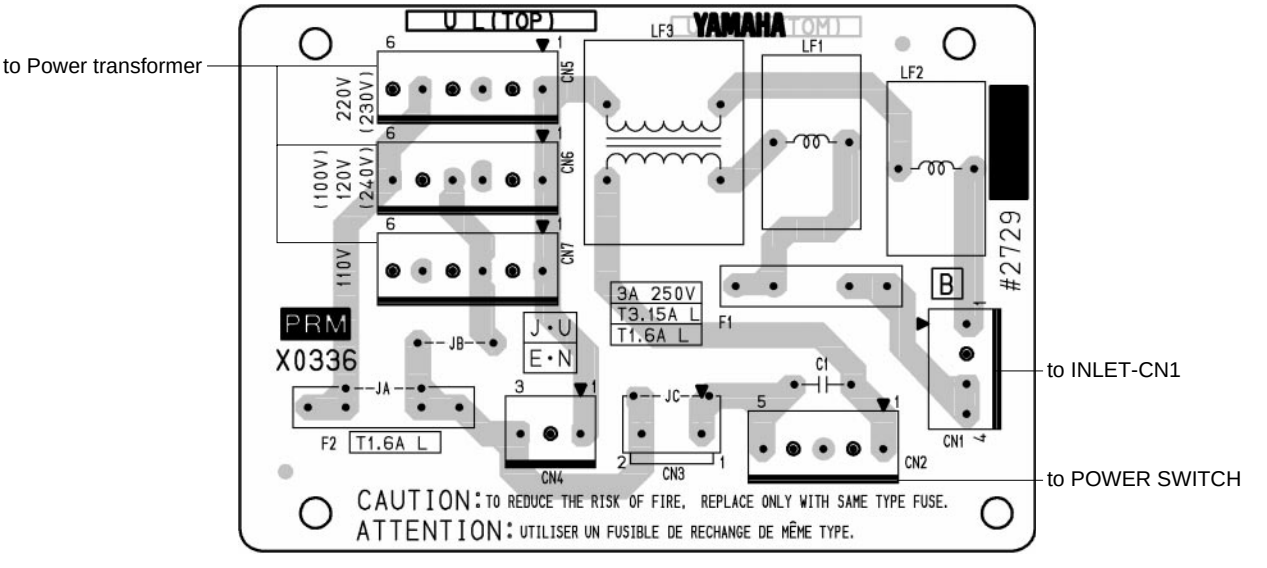

Component side

MODEL	F1	F2	CN5	CN6	CN7	JA	JB	PT/Pri-CN	JC
J	3A 250V	×	×	○	×	○	×	CN6	○
Q	T1.6A L	×	○	×	×	○	×	CN5	○
V	T3.15A L	×	×	×	○	×	○	CN7	○

○: installed ×: not installed

PKH: 2NA-VK80640
PRM: 2NA-V782490 ⚠1

● PKL Circuit board

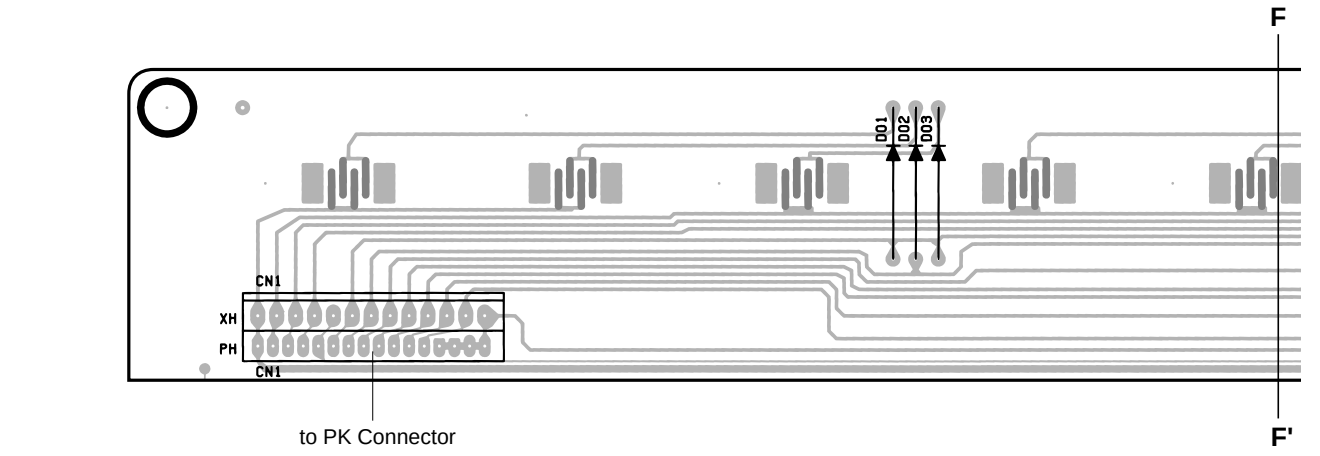

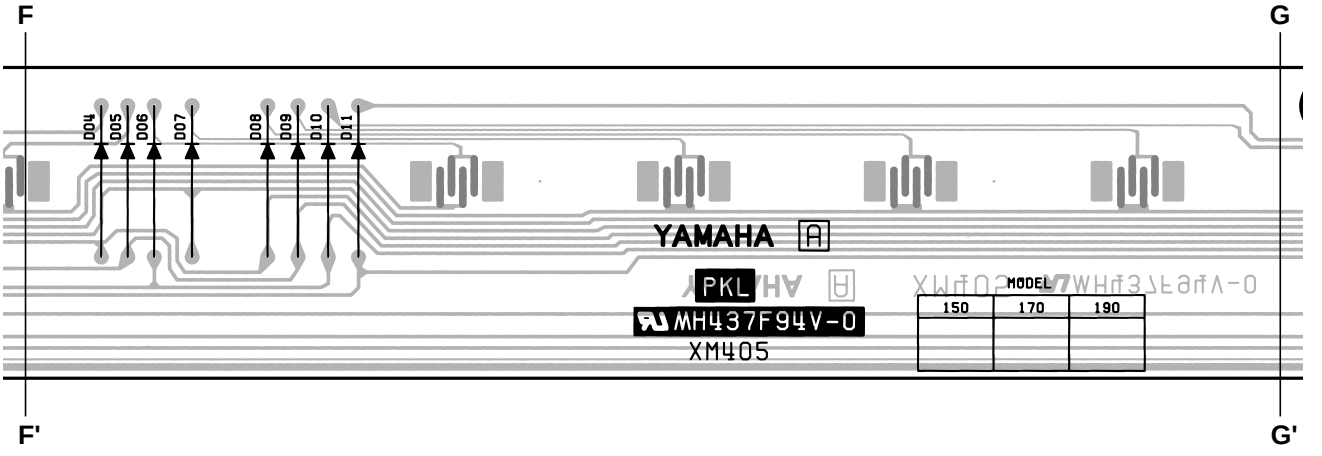

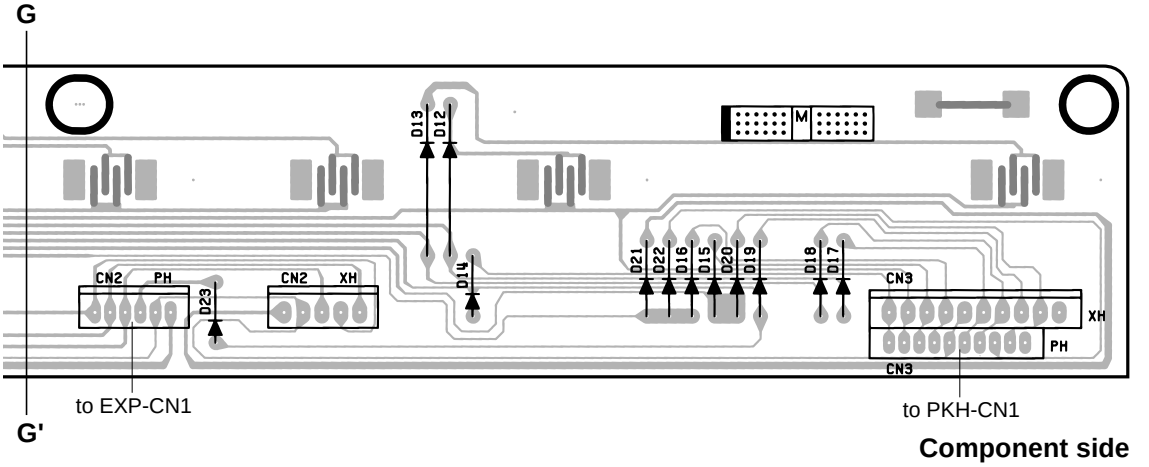

Component side

■ MESSAGES ON THE M.D.R. DISPLAY

Display	Description of the Messages
InSt	No disk is installed. Install a disk.
Prot	(1) The installed disk is write-protected, so the Record, Song Copy, and Song Delete jobs cannot be performed.Set the disk's Write-protect tab to OFF. (2) If you are using a copy-protected playback-only disk, this message may appear when you attemptthe Record, Song Copy, or Song Delete operations. Cancel the operation. (3) When executing Disk Copy, set the Write-protect tab on the source disk to ON.
Fort	The installed disk is not formatted. Format the disk.
FULL	(1) The disk's memory capacity is full, so the Record or Song Copy operation cannot be performed. Use another formatted disk or delete unnecessary data. (2) All of the song numbers contain recorded data, so the Song Copy operation cannot be performed. Press the STOP button, then delete any unnecessary data.
EPty	None of the song numbers contain recorded data, so the Song Copy operation cannot be performed. Press the STOP button and abort the operation.
-out	An error occurred because the disk was removed during recording or playback. Press the STOP button, and replace the disk, then start the operation over again.
diSc	Incompatible disk has been inserted. Insert the appropriate disk.
LotS	Recording cannot be performed because too much data was received at one time. Press the STOP button and retry recording.
bAd	The disk is defective and cannot be formatted. Use another disk.
Eror	An error occurred during the transmission or reception of data. Press the STOP button and retry the operation over again.
--XX	You are trying to record to the song number that already contains recorded data. Stop the recording and select the other blank song number by pressing the SONG SELECT buttons. XX: song number
PrXX	When you insert the "copy-protected" disk to the Electone, this message will appear on the LED display. You cannot overwrite or save the changes. XX: song number
oooo	This message indicates that an incompatible disk is inserted in the Pattern Disk or Registration Menu Disk operation. Insert the appropriate disk.
_XX*	An under line (_) before the song number indicates that it is XG song data. XX: song number
2hd or 2dd	You have inserted a wrong type disk as the destination disk in the Disk Copy operation. Use the same disk type as the source disk.

■ SELF CHECK MODE

Test items

	Test item
2-1	RAM check
2-2	FDD check
2-3	ROM check
2-4	MIDI check
2-5	RHYTHM TONE check
2-6	LEVEL check
2-7	TOUCH check
2-8	EXP check
2-9	PANEL LED check
2-10	LCD check
2-11	SWITCH check
2-12	LED SCAN check
2-13	TO HOST check
2-14	TEST MODE EXIT

1. FUNDAMENTAL OPERATIONS

1-1. HOW TO ENTER THE SELF CHECK MODE

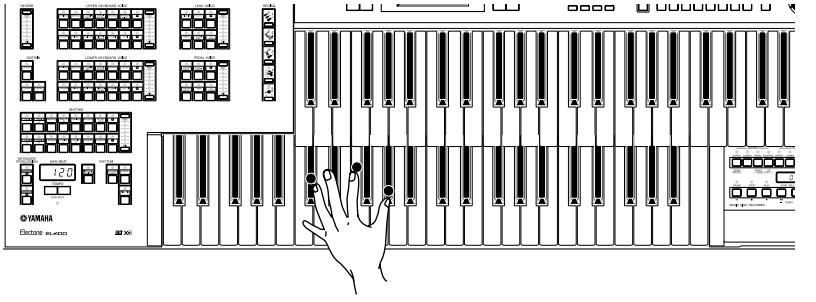

• Operation

1. While simultaneously pressing the C#2, F2 and G#2 keys on the lower keyboard, turn the POWER switch on.
   (Until displaying the following the self check mode menu on the LCD, keep pressing these keys.)

• Display

1. Display the following the self check mode menu on the LCD.
   Opening screen



Page 1

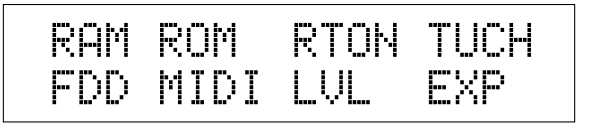

Page 2



• Function

1. Enter the check mode. (The EL-100 will display the page 1 menu on the LCD. Select page with the page [◀] or [▶] button.)

• Check Switches <Check items correspond to chart>

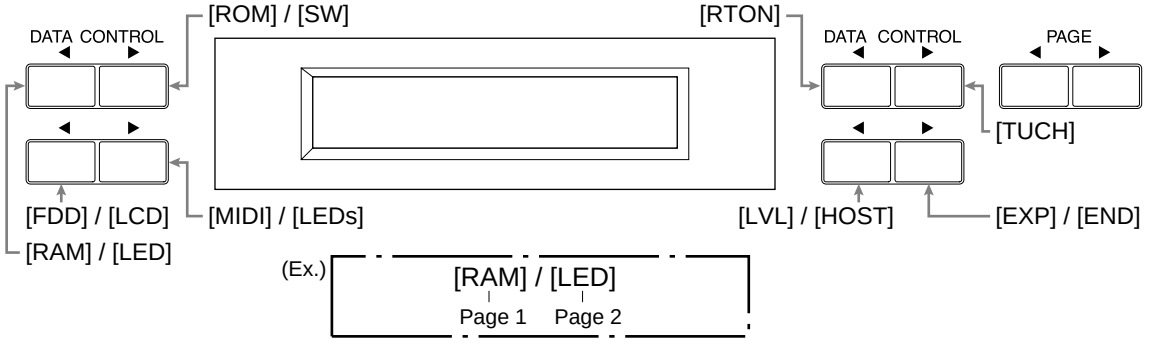

1-2. SELECTION OF THE CHECKS

• Operation

1. Select check items with the check switches (LCD [DATA CONTROL] buttons).

• Display

1. The selected check item will be displayed with the underline. Ex. RAM

• Function

1. Select the self check mode item.

2. CHECK DETAILS

2-1. RAM CHECK [RAM]

• Display

1. If the check results for all RAM connected to the CPU bus are OK, the TEMPO LED will display " o o ".
2. If a defective (NG) RAM was detected, a "–" will be displayed in the corresponding column on the TEMPO LED.
   If the main SDRAM alone is defective, then "– o " will be displayed.
   If the tone SDRAM alone is defective, then " o – " will be displayed.
   (Main SDRAM: 4th column Tone SDRAM: 3rd column)

• Function

1. This checks the condition of all RAM connected to the CPU bus (simple check).
   · Address bus check
   For all addresses when only one address bus is High, "FFh" will be written to each address, and "00h" to all other addresses. After data write, data is checked for all addresses defined for check. This check is executed for all addresses defined for check.
   · Data bus check
   For all addresses when all address buses are "0", a check will be executed to confirm that data can be written and read while each bus is switched to High.

2-2. FDD CHECK [FDD]

• Operation

1. Insert a 2HD or 2DD disk.
2. Press the check switch (for FDD). (See Note)

• Display

1. "PASS" displays on the MDR 7-segment LED after " o o o o " displayed on it.
2. If check results show a defective disk, the TEMPO LED will display "– – – –".
3. If check results are OK, the TEMPO LED will display " o o o o ".
   * Before finishing this check, it takes about twenty seconds.

• Function

1. Tests floppy disk read/write.
2. Test details
   (1) Write and read data "0" from sector 1, top, outermost track.
   (2) Write and read data "E5" from sector 1, top, outermost track.
   (3) Write and read data "0" from sector 1, bottom, outermost track.
   (4) Write and read data "E5" from sector 1, bottom, outermost track.
   (5) Write and read data "0" from sector 1, top, middle track.
   (6) Write and read data "E5" from sector 1, top, middle track.
   (7) Write and read data "0" from sector 1, bottom, middle track.
   (8) Write and read data "E5" from sector 1, bottom, middle track.
   (9) Write and read data "0" from sector 1, top, innermost track.
   (10) Write and read data "E5" from sector 1, top, innermost track.
   (11) Write and read data "0" from sector 1, bottom, innermost track.
   (12) Write and read data "E5" from sector 1, bottom, innermost track.

• Note

1. Do not press the check switch for about 5 seconds after inserting a floppy disk, to allow time for FD IN recognition.
2. Wait until the result is displayed for the FDD check before pressing another [DATA CONTROL] button.

2-3. ROM CHECK [ROM]

• Display

1. If the check results are OK for all Prog and Data ROM, the TEMPO LED will display " o o ".
2. If a defective ROM is detected, the TEMPO LED will display a "–" in the corresponding column.
   If the main ROM alone is defective, then "– o " will be displayed.
   If the wave ROM alone is defective, then " o – " will be displayed.
   (Main ROM: 4th column Wave ROM: 3nd column)

• Function

1. Executes a checksum operation for all ROM connected to the CPU bus (simple check). 8 bits are added to the data for all address defined as (addresses where any one of A2 to A18 is High) + n, and address n, and the results are compared to the data for the last address - 7 + n to make sure they are identical.
   This check is executed for n=0 to 3.

2-4. MIDI CHECK [MIDI]

• Operation

1. Connect the [MIDI IN] and [MIDI OUT] terminals to each other.
2. The HOST SELECT position is changed to "MIDI".

• Display

1. If check results are OK, the TEMPO LED will display " o o o o "
2. If check results are no good, the TEMPO LED will display "– – – –".

• Function

1. If no input is detected within 1 s of output, a no-good result is assumed.

2-5. RHYTHM SOUND CHECK [RTON]

• Function

1. Rhythm sounds are output sequentially.
2. The tempo will be faster when the C1 key of the pedal keyboard is pressed.
3. The tempo will be even faster when the C1 key of the lower keyboard is pressed.

2-6. LEVEL CHECK [LVL]

• Display

1. " LK 1 " (LK1) displayed on the TEMPO LED.
2. Press the LCD DATA CONTROL button corresponding to the check item.
   The TEMPO LED will display " LK2 " (LK2).
3. Press the LCD DATA CONTROL button corresponding to the check item.
   The TEMPO LED will display " UK 1 " (UK1).
4. Press the LCD DATA CONTROL button corresponding to the check item.
   The TEMPO LED will display " UK2 " (UK2).
5. Press the LCD DATA CONTROL button corresponding to the check item.
   The TEMPO LED will display " LEAd " (LEAD).
6. Press the LCD DATA CONTROL button corresponding to the check item.
   The TEMPO LED will display " PK 1 " (PK1).
7. Press the LCD DATA CONTROL button corresponding to the check item.
   The TEMPO LED will display " PK2 " (PK2).
8. Press the LCD DATA CONTROL button corresponding to the check item.
   The TEMPO LED will display " rEu " (REV).

9. Press the LCD DATA CONTROL button corresponding to the check item.
   The TEMPO LED will display "rHY" (RHY).
10. Press the LCD DATA CONTROL button corresponding to the check item.
    The TEMPO LED will display "ACC" (ACC).
11. Press the LCD DATA CONTROL button corresponding to the check item.
    The TEMPO LED will display "HG " (HG).

• Function

1. Test tones are output.

2-7. TOUCH CHECK [TUCH]

• Operation

1. When either the upper, lower or pedal keyboard is pressed, the touch data will be shown on the TEMPO LED.

• Display

1. The initial touch data (01–7F) are displayed in the first two columns. When the pedal keyboard is pressed, that is displayed 60.
2. The initial touch data (00) is displayed in the last two columns.

2-8. EXPRESSION PEDAL CHECK [EXP]

• Operation

1. Operate the expression pedal from the minimum position to the maximum.

• Display

1. The expression pedal data (00-7F) are displayed in the last two columns on the TEMPO LED.
2. The expression pedal data (40) are displayed in the first two columns on the TEMPO LED.

• Function

1. Operation is assumed to be normal when minimum (00) and maximum (7F) are detected.

2-9. PANEL LED CHECK [LED]

• Display

1. All LED are on.
2. All LED are off.

• Function

1. All panel LED are turned on.
2. All panel red LED are turned on.

• Note

1. All panel LED will be toggled between on and off states each time the corresponding check switch (for LED) is pressed.

2-10. LCD CHECK [LCD]

• Display

1. All LCD dots are on.
2. All LCD dots are off.

• Function

1. All LCD dots are turned on.
2. All LCD dots are turned on.

• Note

1. All panel LCD will be toggled between on and off states each time the corresponding check switch (for LCD) is pressed.

2-11. SWITCH CHECK [SW]

• Operation

1. Press all switches.

• Display

1. If all switches are OK, the MDR 7-segment LCD will show “0” after all switches have been pressed.
2. If one or more switches are defective, the MDR 7-segment LCD will not show “0” after all switches have been pressed.

• Function

1. When a switch is pressed, the LED for that switch will go off.
2. When a switch is pressed, the switch code will be displayed in the TEMPO LED.
3. When a is pressed the MDR 7-segment LED will decrement from the initial setting of 127, and show “0” after all switches have been pressed.

• Note

1. To exit this check and select a different one, press another check switch corresponding to the required check while pressing the C#2, F2 and G#2 keys on the lower keyboard.

2-12. LED SCAN [LEDs]

• Function

1. The LED are turned on and off sequentially from the upper left.
2. The tempo will be faster when the C1 key of the pedal keyboard is pressed.
3. The tempo will be even faster when the C1 key of the lower keyboard is pressed.

2-13. TO HOST CHECK [HOST]

• Operation

1. Short-circuit the [IN] and [OUT] pins on the [TO HOST] terminal.
2. HOST SELECT is changed to each position of “Mac”, “PC-1” and “PC-2”.

• Display

1. If the check results are OK, the TEMPO LED will display “ o o o o ”.
2. If a defect was detected, a “–” will be displayed in the corresponding column on the TEMPO LED.
   Mac: 4th column PC-1: 3rd column PC-2: 2nd column

• Function

1. If no input is detected within 1 s of output, the result is no good.

• Note

1. If the [TO HOST] switch is not at the Mac position, the TEMPO LED will display “ MAC ” (Mac). Please select the Mac position.
   The Mac check will be executed when the [TO HOST] switch is set to Mac.
   The Mac check will be executed immediately if the [TO HOST] switch is already set to Mac.
2. If the results for the Mac check are OK, the TEMPO LED will display “ o ”, and then change to “ PC 1 ” (PC1). Select PC-1 on the [TO HOST] switch.
3. The PC-1 check will be executed automatically when the [TO HOST] switch is set to PC-1.
   The TEMPO LED will display “ o o ” and then “ PC2 ” (PC2).
4. Continue in this manner. If all check results are OK, the display will show “ o o o o ”.
5. If a no-good result occurs, the check will be terminated at that point.
   No-good result in Mac check: Display shows “– ”
   No-good result in PC-1 check: Display shows “ o – ”
   No-good result in PC-2 check: Display shows “ o o – ”

2-14. CHECK MODE EXIT [END]

• Function

1. Initializes all RAM and returns to the standard mode.

■ MIDI IMPLEMENTATION CHART

YAMAHA [Electone-EL mode] / Model: EL-100

Date:15. Nov. 2001
Version: 1.00

Function		Transmit	Receive	Remarks
Basic Channel	Default	1, 2, 3, 16 *1	1-3, 5-16 *2	
	Changed	1-16	4	
Mode	Default	Mode 3	Mode 3	
	Messages	X	X	
	Altered	**********	X	
Note Number		36-96 *3	0-127 *4	
	True Voice	**********		
Velocity	Note ON	O 9nH, v=1-127	O 9nH, v=1-127	Transmit with EL-100: fixed to 80.
	Note OFF	O 9nH, v=0	O 9nH, v=0, 8nH	
After Touch	Key's	X	X	PK after touch with EL-100: not transmit.
	Ch's	X	O *6	
Pitch Bend		X	O *6	
Control Change	0, 32	X	O *6	Bank Select
	1, 5, 7, 10	X	O *6	
	4	O	O *7	2nd Expression Pedal
	6, 38	X	O *6	Data Entry
	11	O *7	O *6, 7	Expression Pedal
	96, 97	X	O *6	Data Entry SW
	64-67	X	O *6	
	71-74	X	O *6	Sound Controller
	84, 91, 93, 94	X	O *6	
	98-99, 100-101	X	O *6	NRPN, RPN
	120, 121	X	O *6	
Program Change		O *9	O *10	
	Range	**********		
System Exclusive		O	O	
System Common	Song Position	X	X	
	Song Select	X	X	
	Tune	X	X	
System Real Time	Clock	O	O *8	
	Commands	O	O	(FAH, FCH)
Aux Messages	Local ON/OFF	X	X	
	All Notes OFF	X	O (123-127) *6	
	Active Sense	O	O	
	Reset	X	X	
Notes		*1 Ch 1: UK; Ch 2: LK; Ch 3: PK; Ch 16: Control *2 Ch 1: UK; Ch 2: LK; Ch 3: PK; Ch 4: LEAD 1; Chs 5 - 14: XG; Ch 15: Keyboard *3 UK: 48 - 96; LK: 36 - 84; PK: 36 - 55 *4 UK, LK, PK, LEAD 1: 36 - 96; XG: 0 - 127; Keyboard Percussion: 3 - 127 *5 UK: UK Horizontal Touch; LK: LK Horizontal Touch *6 XG only *7 Control only *8 External Mode only *9 Control: 0 - 15, 112 - 116 *10 UK, LK, PK, Control: 0 - 15, 112 - 116; XG: 0 - 127		

Mode 1 : OMNI ON, POLY
Mode 2 : OMNI ON, MONO
Mode 3 : OMNI OFF, POLY
Mode 4 : OMNI OFF, MONO

O : YES
X : NO

YAMAHA [Electone-XG mode] / Model: EL-100

Date:15. Nov. 2001
Version: 1.00

Function		Transmit *11	Receive	Remarks
Basic Channel	Default	1, 2, 3, 16	1-16	
	Changed	1-16	1-16	
Mode	Default	Mode 3	Mode 3	
	Messages	X	X	
	Altered	**********	X	
Note Number		36-96	0-127	
	True Voice	**********		
Velocity	Note ON	O 9nH, v=1-127	O 9nH, v=1-127	Transmit with EL-100: fixed to 80.
	Note OFF	O 9nH, v=0	O 9nH, v=0, 8nH	
After Touch	Key's	X	X	
	Ch's	X	O	
Pitch Bend		X	O	
Control Change	0, 32	X	O	Bank Select
	1, 5, 7, 10	X	O	
	4	X	X	2nd Expression Pedal
	6, 38	X	O	Data Entry
	11	O	O	Expression Pedal
	96, 97	X	O	Data Entry SW
	64-67	X	O	
	71-74	X	O	Sound Controller
	84, 91, 93, 94	X	O	
	98-99, 100-101	X	O	NRPN, RPN
	120, 121	X	O	
Program Change		O 0-15, 112-116	O	
	Range	**********		
System Exclusive		O	O	
System Common	Song Position	X	X	
	Song Select	X	X	
	Tune	X	X	
System Real Time	Clock	O	X	
	Commands	O	X	
Aux Messages	Local ON/OFF	X	X	
	All Notes OFF	X	O (123-127)	
	Active Sense	O	O	
	Reset	X	X	
Notes		*11 The same as the one in the EL Mode		

Mode 1 : OMNI ON, POLY
Mode 2 : OMNI ON, MONO
Mode 3 : OMNI OFF, POLY
Mode 4 : OMNI OFF, MONO

O : YES
X : NO

■ MIDI DATA FORMAT

1. Channel Messages

1.1 EL Mode

Code (Hexadecimal)	Function	Transmit	Receive	Remarks
8n,nn,00-7F	Note Off	X	1ch	UK
		X	2ch	LK
		X	3ch	PK
		X	(4ch)*	LEAD
		X	5-14ch	XG
		X	15ch	Keyboard Percussion
9n,nn,00	Note Off	(1ch)*	1ch	UK
9n,nn,01-7F	Note On	(2ch)*	2ch	LK
		(3ch)*	3ch	PK (note on transmit velocity=50H)
		X	(4ch)*	LEAD
		X	5-14ch	XG
		X	15ch	Keyboard Percussion
Bn,00,00-7F	Bank select	X	5-14ch	XG
Bn,20,00-7F				
Bn,01,00-7F	Modulation	X	5-14ch	XG
Bn,04,00-7F	2nd Expression	X	16ch	Control
		X	(4ch)*	LEAD
Bn,05,00-7F	Portamento Time	X	5-14ch	XG
Bn,06,00-7F	Data Entry	X	5-14ch	XG
Bn,26,00-7F				
Bn,07,00-7F	Volume	X	5-14ch	XG
Bn,0A,00-7F	Pan	X	5-14ch	XG
Bn,0B,00-7F	Expression	16ch	16ch	Control
			5-14ch	XG
Bn,40,00-7F	Hold	X	5-14ch	XG
Bn,41,00-7F	Portamento	X	5-14ch	XG
Bn,42,00-7F	Sostenuto	X	5-14ch	XG
Bn,43,00-7F	Soft Pedal	X	5-14ch	XG
Bn,47,00-7F	Resonance	X	5-14ch	XG
Bn,48,00-7F	Release Time	X	5-14ch	XG
Bn,49,00-7F	Attack Time	X	5-14ch	XG
Bn,4A,00-7F	Brightness	X	5-14ch	XG
Bn,54,00-7F	Portamento Control	X	5-14ch	XG
Bn,5B,00-7F	Reverb Send Level	X	5-14ch	XG
Bn,5D,00-7F	Chorus Send Level	X	5-14ch	XG
Bn,5E,00-7F	Variation Send Level	X	5-14ch	XG
Bn,60,00-7F	Data Increment	X	5-14ch	XG
Bn,61,00-7F	Data Decrement			
Bn,62,00-7F	NRPN LSB	X	5-14ch	XG
Bn,63,00-7F	NRPN MSB			
Bn,64,00-7F	RPN LSB	X	5-14ch	XG
Bn,65,00-7F	RPN MSB			
Bn,78,00	All Sounds Off	X	5-14ch	XG
Bn,79,00	Reset All Controllers			
Bn,7B,00	All Note Off			
Bn,7C,00	Omni Off			
Bn,7D,00	Omni On			
Bn,7E,00	Mono			
Bn,7F,00	Poly			

Code (Hexadecimal)	Function	Transmit	Receive	Remarks
Cn,nn	Program Change	X	1ch	UK
		X	2ch	LK
		X	3ch	PK
		X	5-14ch	XG
		16ch	16ch	Control
Dn,00-7F	After Touch	X	5-14ch	XG
En,00-7F,00-7F	Pitch Bend	X	5-14ch	XG

* Can be changed in the MIDI settings.

1.2 XG Mode

Code (Hexadecimal)	Function	Transmit	Receive	Remarks
8n,nn,00-7F	Note Off	X	1-16ch	
9n,nn,00	Note Off	(1ch)		UK
9n,nn,01-7F	Note On	(2ch)*		LK
		(3ch)*		PK (note on transmit velocity=50H)
			1-16ch	
Bn,00,00-7F Bn,20,00-7F	Bank select	X	1-16ch	
Bn,01,00-7F	Modulation	X	1-16ch	
Bn,04,00-7F	2nd Expression	X	X	Control
		X	X	LEAD
Bn,05,00-7F	Portamento Time	X	1-16ch	
Bn,06,00-7F Bn,26,00-7F	Data Entry	X	1-16ch	
Bn,07,00-7F	Volume	X	1-16ch	
Bn,0A,00-7F	Pan	X	1-16ch	
Bn,0B,00-7F	Expression	16ch	1-16ch	Control
Bn,40,00-7F	Hold	X	1-16ch	
Bn,41,00-7F	Portamento	X	1-16ch	
Bn,42,00-7F	Sostenuto	X	1-16ch	
Bn,43,00-7F	Soft Pedal	X	1-16ch	
Bn,47,00-7F	Resonance	X	1-16ch	
Bn,48,00-7F	Release Time	X	1-16ch	
Bn,49,00-7F	Attack Time	X	1-16ch	
Bn,4A,00-7F	Brightness	X	1-16ch	
Bn,54,00-7F	Portamento Control	X	1-16ch	
Bn,5B,00-7F	Reverb Send Level	X	1-16ch	
Bn,5D,00-7F	Chorus Send Level	X	1-16ch	
Bn,5E,00-7F	Variation Send Level	X	1-16ch	
Bn,60,00-7F Bn,61,00-7F	Data Increment Data Decrement	X	1-16ch	
Bn,62,00-7F Bn,63,00-7F	NRPN LSB NRPN MSB	X	1-16ch	
Bn,64,00-7F Bn,65,00-7F	RPN LSB RPN MSB	X	1-16ch	
Bn,78,00 Bn,79,00 Bn,7B,00 Bn,7C,00 Bn,7D,00 Bn,7E,00 Bn,7F,00	All Sounds Off Reset All Controllers All Note Off Omni Off Omni On Mono Poly	X	1-16ch	
Cn,00-7F	Program Change	16ch	Control	
		1-16ch		
Dn,00-7F	After Touch	X	1-16ch	
En,00-7F,00-7F	Pitch Bend	X	1-16ch	

* Can be changed in the MIDI settings.

2. Realtime Messages

Code (Hexadecimal)	Function	Transmit	Receive	Remarks
F8	Clock	O	O*	
FA	Start	O	O	
FC	Stop	O	O	
FE	Active Sensing	O	O	
FF	Reset	X	X	

* Received only when in the Ext. mode

3. System Exclusive Messages

3.1 Format

Universal Realtime Messages

Code (Hexadecimal)	Message	Transmit	Receive
F0,7F,7F,04,01,SS,TT,F7	XG Master Volume	X	O
XN		X	O

Universal Non-Realtime Messages

Code (Hexadecimal)	Message	Transmit	Receive
F0,7E,7F,09,01,F7	GM ON	X	O
XN		X	O

XG Native

Code (Hexadecimal)	Message	Transmit	Receive
F0,43,1N,4C,AH,AM,AL,..data..,F7	XG Parameter Change	X	O
F0,43,0N,4C,BH,BL,AH,AM,AL,..data..,cc,F7	XG Bulk Dump	X	O
F0,43,1N,27,30,00,00,MM,LL,cc,F7	XG Master Tuning	X	O
F0,43,1N,4C,00,00,7E,00,F7	XG System On	X	O

Electone/Single Keyboard Common Messages

Code (Hexadecimal)	Message	Transmit	Receive
F0,43,73,01,02,F7	Request for Internal Synch. Mode	X	O
03	Request for External Synch. Mode	X	O

Electone Exclusive

Code (Hexadecimal)	Message	Transmit	Receive
F0,43,70,70,00,...(Data)...F7	Bulk Dump Data	X	O
78		O	O
ID		X	O
F0,43,70,ID,00,F7	Model ID Data	O	X
F0,43,70,70,nn(*1),F7	Request-to-Send Data	X	O
78		X	O
ID		X	O
F0,43,70,70,nn(*2),F7	Request-to-Receive Data	X	O
78		X	O
ID		X	O
F0,43,70,70,30,F7	Request-to-Send Model ID data	X	O
F0,43,70,70,38,7F,F7	Bulk Dump Acknowledge	X	X
00	Bulk Dump Unacknowledge	O	X
F0,43,70,70,40,nn(*3),7F,F7	Switch On	O	O
00	Switch Off	O	O
F0,43,70,70,40,50,TL,TH,F7	Tempo	O	O
F0,43,70,78,41,cd,dd,F7(*4)	Panel Switch Events	O	O
F0,43,70,78,42,...(Data)...F7	Current Registration Data	O	O
F0,43,70,78,44...(Data)...(*5),F7	EL MIDI Parameters	O	O
F0,43,70,70,70,nn(*6),F7	External MDR	X	O
F0,43,70,70,73,F7	EL ON	X	O
F0,43,70,70,78,SC,NC,F7	Bar Signal	O	O

X : don't care N : Device Number(“0” on EL-100) ID=4A

*1 Data Codes to Send

nn	Data
10	All RAM
11	Registrations
12	Rhythm Sequences
14,15	User Patterns
16	User Voices
17	Keyboard Percussion Assignments

*2 Data Codes to Receive

nn	Data
20	All RAM
21	Registrations
22	Rhythm Sequences
24,25	User Patterns
26	User Voices
27	Keyboard Percussion Assignments

*3 Switches

nn	Switch	Transmit	Receive
45	Left Footswitch	O	O
47	Knee Lever	X	O
48	Fill In 1	O	O
4B	Intro./Ending	O	O

*4 Switch Codes

Selectors

Code	Switch	Transmit	Tx Range	Receive	Rx Range	Remarks
02	UK Voice 1	O	[00-0D]	O	[00-0D]	Switch Number
03	LK Voice 1	O	[00-0D]	O	[00-0D]	Switch Number
04	UK Voice 2	O	[00-0D]	O	[00-0D]	Switch Number
05	LK Voice 2	O	[00-0D]	O	[00-0D]	Switch Number
06	LEAD Voice	O	[00-04]	O	[00-04]	Switch Number
07	Pedal Voice 1	O	[00-04]	O	[00-04]	Switch Number
08	Pedal Voice 2	O	[00-04]	O	[00-04]	Switch Number
0B	Rhythm	O	[00-0B]	O	[00-04]	Switch Number
0F	Registration Memory	X		O	[00-0F]	

Volume

Code	Switch	Transmit	Tx Range	Receive	Rx Range	Remarks
12	UK Voice 1	O	[00-7F]	O	[00-7F]	Volume Data 00:MAX,7F:MIN
13	LK Voice 1	O	[00-7F]	O	[00-7F]	Volume Data; 00:MAX,7F:MIN
14	UK Voice 2	O	[00-7F]	O	[00-7F]	Volume Data; 00:MAX,7F:MIN
15	LK Voice 2	O	[00-7F]	O	[00-7F]	Volume Data; 00:MAX,7F:MIN
16	LEAD Voice	O	[00-7F]	O	[00-7F]	Volume Data; 00:MAX,7F:MIN
17	Pedal Voice 1	O	[00-7F]	O	[00-7F]	Volume Data; 00:MAX,7F:MIN
18	Pedal Voice 2	O	[00-7F]	O	[00-7F]	Volume Data; 00:MAX,7F:MIN
1A	Rhythm	O	[00-7F]	O	[00-7F]	Volume Data; 00:MAX,7F:MIN
1B	Reverb	O	[00-7F]	O	[00-7F]	Depth Data; 00:MAX,7F:MIN

To Lower

Code	Switch	Transmit	Tx Range	Receive	Rx Range	Remarks
36	LEAD Voice	O	[00-01]	O	[00-01]	00:OFF,01:ON
37	Pedal Voice 1	O	[00-01]	O	[00-01]	00:OFF,01:ON
38	Pedal Voice 2	O	[00-01]	O	[00-01]	00:OFF,01:ON

Sustain

Code	Switch	Transmit	Tx Range	Receive	Rx Range	Remarks
50	Upper Keyboard	O	[00-01]	O	[00-01]	00:OFF,01:ON
51	Lower Keyboard	O	[00-01]	O	[00-01]	00:OFF,01:ON
52	Pedalboard	O	[00-01]	O	[00-01]	00:OFF,01:ON

Keyboard Percussion

Code	Switch	Transmit	Tx Range	Receive	Rx Range	Remarks
5B	Lower Keyboard	O	[00-01]	O	[00-01]	00:OFF,01:ON
5C	Pedal Board	O	[00-01]	O	[00-01]	00:OFF,01:ON

Disable

Code	Switch	Transmit	Tx Range	Receive	Rx Range	Remarks
5F	Disable	O	[00-01]	O	[00-01]	00:OFF,01:ON

Tremolo

Code	Switch	Transmit	Tx Range	Receive	Rx Range	Remarks
60	Tremolo	O	[00-01]	O	[00-01]	00:SLOW,01:FAST

Rhythm Sequence

Code	Switch	Transmit	Tx Range	Receive	Rx Range	Remarks
61	Sequence 1	O	[00-01]	O	[00-01]	00:OFF,01:ON
62	Sequence 2	O	[00-01]	O	[00-01]	00:OFF,01:ON
63	Sequence 3	O	[00-01]	O	[00-01]	00:OFF,01:ON
64	Sequence 4	O	[00-01]	O	[00-01]	00:OFF,01:ON

*5 EL MIDI Parameters

Voice Section Parameters

Panel Voice Parameters

Address			Size	Data	Parameter	Content	Transmit	Tx Range	Receive	Rx Range	Remarks
00	00-04, 06, 07	00-0D	2	00-7F	Voice Assign Number H		O	[00-7F]	O	[00-7F]	
				00-7F	Voice Assign Number L		O	[00-0F]	O	[00-7F]	
00	00-04, 06, 07	10	1	00-0D	Voice Selector Number		X	[00-0D]	O	[00-0D]	
00	00-04, 06, 07	11	1	00-7F	Volume	00:MIN 7F:MAX	X	[00-7F]	O	[00-7F]	
00	00-04, 06, 07	12	1	00-7F	Reverb Send Level	00:MIN 7F:MAX	O	[00-7F]	O	[00-7F]	
00	00-04, 06, 07	14	1	00-04	Feet	00:Preset 01:16Feet 02:8Fee 03:4Feet 04:2Feet	O	[00] [01] [02] [03] [04]	O	[00][05-7F] [01] [02] [03] [04]	
00	00-04, 06, 07	15	1	00-7F	Pan	00:Right 40:Center 7F:Left	O	[0B] [1D] [2B] [40] [55] [63] [75]	O	[00-11] [12-25] [26-31] [32-4E] [4F-5A] [5B-6E] [6F-7F]	
00	00-04, 06, 07	16	1	00-7F	Initial Touch Sensitivity	00: MIN 7F: MAX	O	[00-7F]	O	[00-7F]	
00	00-04, 06, 07	19	1	00-01	User Vibrato	00:PRESET 01:USER	O	[00] [01]	O	[00] [01-7F]	
00	00-04, 06, 07	1A	1	02-1A	Vibrato Delay	00:Short 7F:Long	O	[02-1A]	O	[00-7F]	
00	00-04, 06, 07	1B	1	00-54	Vibrato Depth	00: MIN 7F: MAX	O	[00-54]	O	[00-7F]	

Address			Size	Data	Parameter	Content	Transmit	Tx Range	Receive	Rx Range	Remarks
00	00-04, 06, 07	1C	1	3C-6C	Vibrato Speed	00:Slow 7F:Fast	O	[3C-6C]	O	[00-7F]	
00	04, 06, 07	1F	1	00-01	To Lower	00:OFF 01:ON	X	[00] [01]	O	[00] [01-7F]	
00	04	20	1	00-02	Slide	00:OFF 01:ON	O	[00] [01]	O	[00] [01]	
00	04	21	1	02-7F	Slide Speed	02:KneeControl 02:Slow 7F:Fast	X O	[02-7F]	O O	[02] [00-7F]	
00	04	22	1	00-24	Detune	00:Normal 24:TuneUP	O	[00-24]	O	[00-7F]	
00	00-07 00, 01, 04, 06, 07	23	1	00-01	2nd Expression Pedal	00:OFF 01:ON	X	[00] [01]	O	[00] [01-7F]	
00	00-04	24	1	00-01	Glide	00:OFF 01:ON	O	[00] [01]	O	[00] [01-7F]	

Effect Parameters (Voice Sections)

Address			Size	Data	Parameter	Content	Transmit	Tx Range	Receive	Rx Range	Remarks
00-01	00-04, 06, 07	3F	1	00-05	Effect Select	00:Preset 01:OFF 02:Tremolo 03:Symphonic 04:Delay 05:Flanger 06:Distortion	O	[00] [01] [02] [03] [04] [05] [06]	O	[00][07-7F] [01] [02] [03] [04] [05] [06]	
00-01	00-04, 06, 07	40-42	1	00-7F	Reverb		X	[00-7F]	O	[00-7F]	
00-01	00-04, 06, 07	48-4A	1	00-7F	Tremolo		X	[00-7F]	O	[00-7F]	
00-01	00-04, 06, 07	50	1	00-7F	Symphonic		O	[00-7F]	O	[00-7F]	
00-01	00-04, 06, 07	58-5B	1,2	00-7F	Delay		O	[00-7F]	O	[00-7F]	
00-01	00-04, 06, 07	60-62	1	00-7F	Flanger		O	[00-7F]	O	[00-7F]	
00-01	00-04, 06, 07	68-69	1	00-7F	Distortion		O	[00-7F]	O	[00-7F]	

Keyboard Parameters

Sustain Parameters

Address			Size	Data	Parameter	Content	Transmit	Tx Range	Receive	Rx Range	Remarks
02	00-02	00	1	00-01	Sustain On/Off	00:OFF 01:ON	X	[00] [01]	O	[00] [01-7F]	
02	00-02	01	1	00-0C	Length	00:Short 0C:Long	O	[15-3D]	O	[00-7F]	

Keyboard Percussion Parameters

Address			Size	Data	Parameter	Content	Transmit	Tx Range	Receive	Rx Range	Remarks
02	00-02	10	1	00-01	Keyboard Percussion	00:OFF 01:ON	X	[00] [01]	O	[00] [01-7F]	
02	00-02	11	1	00-08	Modes	00:Preset 01-08:UserAssign1-8	O	[00] [01-08]	O	[00] [01-08]	

Effect Parameters (Keyboard)

Address			Size	Data	Parameter	Content	Transmit	Tx Range	Receive	Rx Range	Remarks
02	00-02	40-42	1		Reverb		X	[00-7F]	O	[00-7F]	
02	00-02	48-4A	1		Tremolo		X	[00-7F]	O	[00-7F]	
02	00-02	50	1		Symphonic		X	[00-7F]	O	[00-7F]	
02	00-02	58-5B	1,2		Delay		X	[00-7F]	O	[00-7F]	
02	00-02	60-62	1		Flanger		X	[00-7F]	O	[00-7F]	
02	00-02	68-69	1		Distortion		X	[00-7F]	O	[00-7F]	

Rhythm

Rhythm Parameters

Address			Size	Data	Parameter	Content	Transmit	Tx Range	Receive	Rx Range	Remarks
03	00	00-0B	1	00-65 67-98	Pattern Assign Number	Pattern Numbers	O	[00-62]	O	[00-62]	
03	00	10	1	00-0B	Pattern Select Number	Selector Switch Numbers	X	[00-0B]	O	[00-0B]	
03	00	11	1	00-7F	Volume	00:MIN 7F:MAX	X	[00-7F]	O	[00-7F]	
03	00	12	1	00-7F	Reverb Send Level	00:MIN 7F:MAX	O	[00-7F]	O	[00-7F]	
03	00	14	1	00-01	Auto Variation	00:OFF 01:ON	O	[00] [01]	O	[00] [01-7F]	
03	00	15	1	00-7F	Rhythm Balance	00:Cymbal 40:Center 7F:Drums	O	[00-7F]	O	[00-7F]	
03	00	16	1	00-01	2nd Expression Tempo Control	00:OFF 01:ON	X	[00] [01]	O	[00] [01-7F]	
03	00	17	1	00-03	Footswitch Rhythm Mode	00:OFF 01:RhythmStop 02:Ending 03:FillIn	O	[00] [01] [02] [03]	O	[00][04-7F] [01] [02] [03]	

Rhythm Sequence Parameters

Address			Size	Data	Parameter	Content	Transmit	Tx Range	Receive	Rx Range	Remarks
03	01	00-03	1	00-01	Rhythm Sequence	00:OFF 01:ON	X	[00] [01]	O	[00] [01-7F]	

Accompaniment Parameters

Address			Size	Data	Parameter	Content	Transmit	Tx Range	Receive	Rx Range	Remarks
03	02	10	1	00-03	Pattern Selector Number	00:Type1 01:Type2 02:Type3 03:Type4	O	[00] [01] [02] [03]	O	[00] [01] [02] [03]	
03	02	11	1	00-01	Volume Mute	00:OFF 01:MUTE	O	[00] [01]	O	[00] [01-7F]	
03	02	12	1	00-7F	Volume	00:MIN 7F:MAX	O	[00-7F]	O	[00-7F]	
03	02	13	1	00-7F	Reverb Send Level	00:MIN 7F:MAX	O	[00-7F]	O	[00-7F]	

A.B.C. Parameters

Address			Size	Data	Parameter	Content	Transmit	Tx Range	Receive	Rx Range	Remarks
03	03	00	1	00-03	A.B.C. Mode	00:OFF 01:SingleFinger 02:Fingerd 03:CustomABC	O	[00] [01] [02] [03]	O	[00][04-7F] [01] [02] [03]	
03	03	01	1	00-01	Lower Memory	00:OFF 01:ON	O	[00] [01]	O	[00] [01-7F]	
03	03	02	1	00-01	Pedal Memory	00:OFF 01:ON	O	[00] [01]	O	[00] [01-7F]	

M.O.C. Parameters

Address			Size	Data	Parameter	Content	Transmit	Tx Range	Receive	Rx Range	Remarks
03	04	00	1	00-03	M.O.C. Mode	00:OFF 01:Close2Note 02:Close3Note 03:PassBOpen	O	[00] [01] [02] [03]	O	[00][04-7F] [01] [02] [03]	
03	04	01	1	00-01	M.O.C. Knee Cntrol	00:OFF 01:ON	O	[00] [01]	O	[00] [01-7F]	

Overall

System Parameters

Address			Size	Data	Parameter	Content	Transmit	Tx Range	Receive	Rx Range	Remarks
04	00	00	1	00-01	Disable	00:OFF 01:ON	X	[00] [01]	O	[00] [01-7F]	
04	00	02	1	3A-46	Transpose	3A:KeyDown 40:Normal 46:KeyUp	O	[3A] [40] [46]	O	[3A] [40] [46]	
04	00	03	1	00-0B	2nd Expression Range	01:100 ¢ 0C:1200 ¢	X	[01-0C]	O	[01-0C]	
04	00	04	1	00-03	Footswitch Mode	00:OFF 01:Rhythm 02:Glide 03:Tremolo	O	[00] [01] [02] [03]	O	[00][04-7F] [01] [02] [03]	
04	00	05	1	3C-4F	Pitch	3C:PitchDown 40:Normal 4F:PitchUp	O	[3C-4F]	O	[3C-4F]	
04	00	06	1	00-04	Glide Speed	01:Slow 05:Fast	O	[04-1C]	O	[00-7F]	
04	00	07	1	34-4C	Manual Balance	34:Upper 40:Center 4C:Lower	O	[34-4C]	O	[00-7F]	
04	00	09	1	00-01	L.I.T.	00:Mode1 01:Mode2	X	[00] [01]	X	[00] [01]	
04	00	0A	1	00-01	Expression INT/EXT	00:Internal 01:Externa	X	[00] [01]	O	[00][02-7F] [01]	

Effect Parameters (Overall)

Address			Size	Data	Parameter	Content	Transmit	Tx Range	Receive	Rx Range	Remarks
04	00	40-42	1		Reverb		O	[00-7F]	O	[00-7F]	
04	00	48-4A	1		Tremolo		O	[00-7F]	O	[00-7F]	
04	00	50	1		Symphonic		X	[00-7F]	O	[00-7F]	
04	00	58-5B	1,2		Delay		X	[00-7F]	O	[00-7F]	
04	00	60-62	1		Flanger		X	[00-7F]	O	[00-7F]	
04	00	68-69	1		Distortion		X	[00-7F]	O	[00-7F]	

*6 External MDR

nn	Switch	Transmit	Receive
01	Play Start	X	O
02	Play Stop	X	O
03	Record Start	X	O
04	Record Stop	X	O
09	Rhythm Pointer Rese	X	O

YAMAHA Electone®

EL-100

PARTS LIST

CONTENTS

OVERALL ASSEMBLY ····· 2
PANEL UNIT ····· 4
LEFT PANEL ASSEMBLY ····· 6
RIGHT PANEL ASSEMBLY ····· 7
CENTER PANEL ASSEMBLY ····· 8
KEYBOARD ASSEMBLY ····· 9
PANEL CASE UNIT ····· 10
SPEAKER BOX UNIT ····· 13
PEDAL BOX UNIT ····· 14
EXP PEDAL ····· 16
BENCH ····· 18
ELECTRICAL PARTS ····· 19~38

Notes: DESTINATION ABBREVIATIONS

A:	Australian model	M:	South African model
B:	British model	O:	Chinese model
C:	Canadian model	Q:	South-east Asia model
D:	German model	T:	Taiwan model
E:	European model	U:	U.S.A. model
F:	French model	V:	General export model (110 V)
H:	North European model	W:	General export model (220 V)
I:	Indonesian model	N,X:	General export model
J:	Japanese model	Y:	Export model

WARNING

Components having special characteristics are marked ⚠ and must be replaced with parts having specification equal to those originally installed.

- The numbers in " QTY " show quantities for each unit.
- The parts with " - - " in " **PART NO.** " are not available as spare parts.
- The mark " } " in the remarks column indicates that these parts are interchangeable.
- The second letter of the shaded ( ) part number is O, not zero.
- The second letter of the shaded ( ) part number is I, not one.

■ OVERALL ASSEMBLY

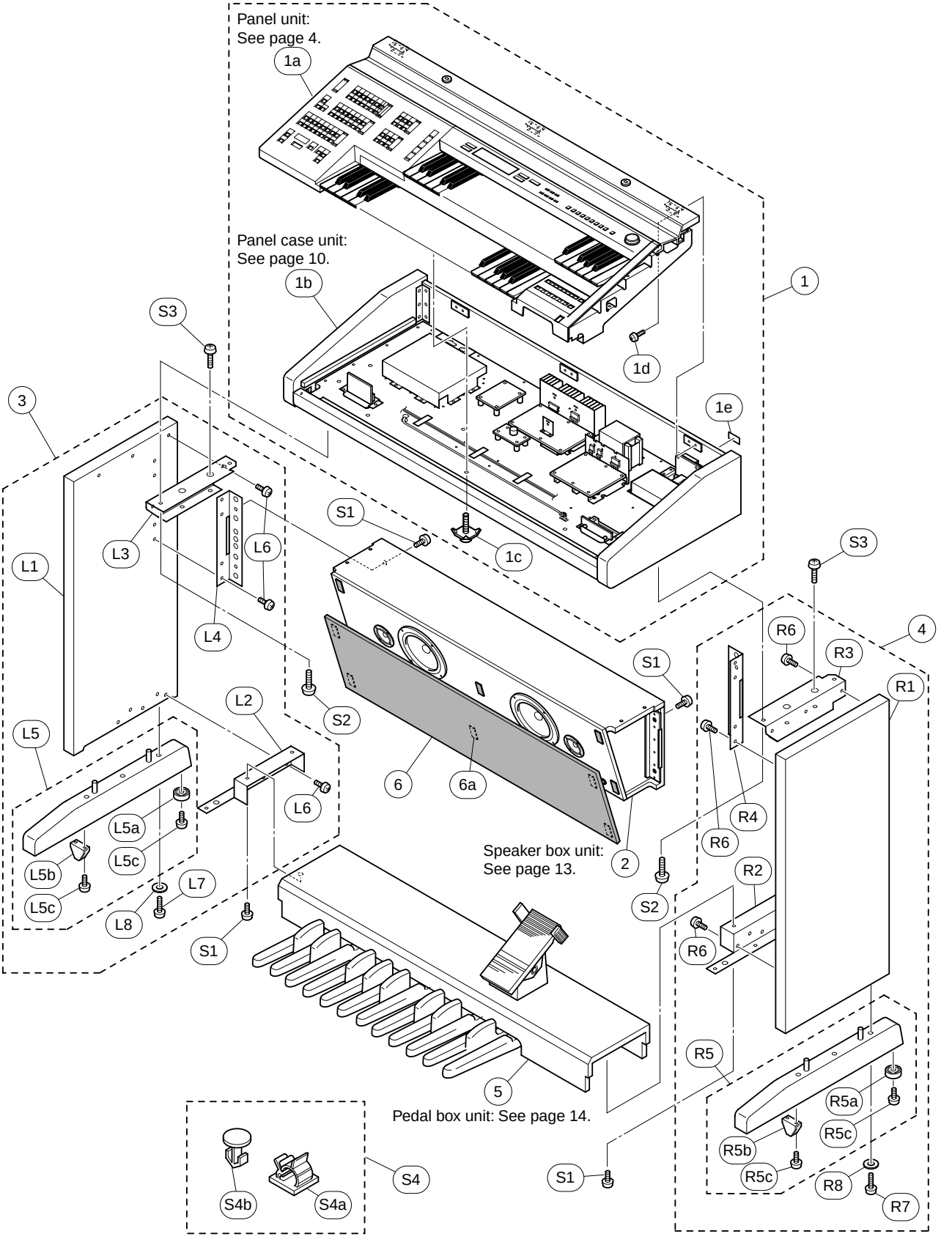

	REF NO.	PART NO.	DESCRIPTION			REMARKS	QTY	RANK
			OVERALL ASSEMBLY			EL-100		
		- -	Overall Assembly			J (V784160)		
		- -	Overall Assembly			Q (V784170)		
		- -	Overall Assembly			V (V784180)		
	1	- -	Upper Unit			J (V784240)		
	1	- -	Upper Unit			Q (V784250)		
	1	- -	Upper Unit			V (V784260)		
	1a	- -	Panel Unit			J (V786590)		
	1a	- -	Panel Unit			Q,V (V842790)		
	1b	- -	Panel Case Unit			J (V786600)		
	1b	- -	Panel Case Unit			Q (V842800)		
	1b	- -	Panel Case Unit			V (V842810)		
	1c	VD878100	Pan Head Screw	S 5.0X20 MFZN2BL			6	01
	1d	EP030250	Bind Head Tapping Screw-1	3.5X14 MFZN2BL			6	01
	1e	VT501000	Label, AC Inlet					03
	2	- -	Speaker Box Unit			(V784270)		
*	3	V7842800	Side Board Unit					
*	4	V7842900	Side Board Unit					
	5	- -	Pedal Box Unit			(V784320)		
*	6	V7843300	Grille Assembly					
	6a	VJ933400	Dual Lock Black	55X25			5	03
*		V7842800	Side Board Unit L	LEFT				
	L1	- -	Side Board L	LEFT		(V788200)		
	L2	- -	Holder, Pedal Box L	LEFT		(V788270)		
	L3	- -	Holder, Speaker Box L	LEFT		(V788290)		
	L4	VJ907500	Angle Bracket, Speaker	2.0 L				04
*	L5	V7883300	Stand Base Assembly					
	L5a	VI235200	Foot F/R	FRONT/REAR			2	01
	L5b	VT485700	Foot C Black	CENTER				03
	L5c	VA914400	Bind Head Tapping Screw-B	4.0X12 MFZN2Y			4	01
	L6	EP040070	Bind Head Tapping Screw-1	4.0X20 MFZN2BL			12	01
	L7	VV444000	Pan Head Tapping Screw-1	4.0X65 MFZN2Y			3	01
	L8	VK287600	Flat Washer	4.0X12X1.0 MFZN2Y			3	01
*		V7842900	Side Board Unit R	RIGHT				
	R1	- -	Side Board R	RIGHT		(V788210)		
	R2	- -	Holder, Pedal Box R	RIGHT		(V788280)		
	R3	- -	Holder, Speaker Box R	RIGHT		(V788310)		
	R4	VJ907500	Angle Bracket, Speaker	2.0 L				04
*	R5	V7883300	Stand Base Assembly					
	R5a	VI235200	Foot F/R	FRONT/REAR			2	01
	R5b	VT485700	Foot C Black	CENTER				03
	R5c	VA914400	Bind Head Tapping Screw-B	4.0X12 MFZN2Y			4	01
	R6	EP040070	Bind Head Tapping Screw-1	4.0X20 MFZN2BL			12	01
	R7	VV444000	Pan Head Tapping Screw-1	4.0X65 MFZN2Y			3	01
	R8	VK287600	Flat Washer	4.0X12X1.0 MFZN2Y			3	01
			ACCESSORIES					
		V7344000	Music Rest Assembly					09
*		V8745000	Electone Cover					
*		V7888700	Screw Set					05
⚠		V2916900	AC Cord Set	J 2P 7A 2.5m		J		05
⚠		V2917100	AC Cord Set	E 2P 2.5S 2.5m		Q		05
⚠		V2917000	AC Cord Set	UC 2P 7A 2.44m		V		06
		- -	Bench	ELB		(V786490)		
*		V7888700	Screw Set					05
	S1	EG350170	Bind Head Screw	5.0X12 MFZN2BL			8	01
	S2	VB131900	Bind Head Screw	6.0X25 MFZN2BL			4	01
	S3	- -	Truss Head Screw	5.0X25 MFZN2Y		(V893490)	4	
	S4	- -	Cord Clamp Set			(V842000)		
	S4a	VB818900	Cord Clamp Black	AC-13 UL94V-2			2	02
	S4b	VE636200	Cap	M12.0			4	02

*: New Parts

RANK: Japan only

■ PANEL UNIT

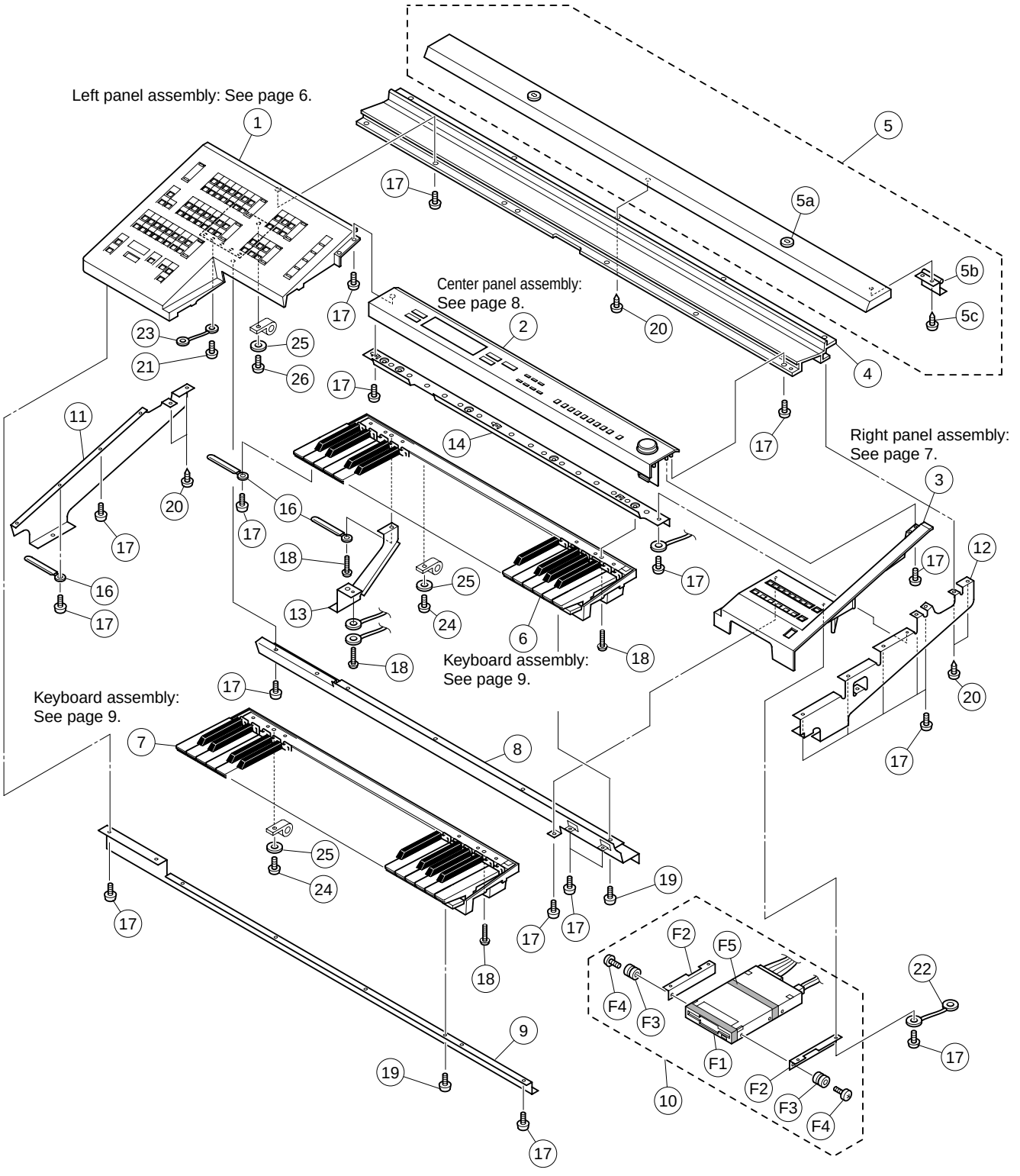
Left panel assembly: See page 6.
Center panel assembly: See page 8.
Right panel assembly: See page 7.
Keyboard assembly: See page 9.
Keyboard assembly: See page 9.
1
2
3
4
5
5a
5b
5c
6
7
8
9
10
11
12
13
14
16
17
18
19
20
21
22
23
24
25
26
F1
F2
F3
F4
F5

	REF NO.	PART NO.	DESCRIPTION			REMARKS	QTY	RANK
			PANEL UNIT			EL-100		
		- -	Panel Unit			J (V786590)		
		- -	Panel Unit			Q,V (V842790)		
		CB069250	Cord Holder	BK-1			4	01
*		V7792500	Connector Assembly	34P FLAT CABLE				
*		V8453600	Cable Kit 1	1				
*		V8453700	Cable Kit 2	2				
		VK127600	Connector Assembly	KRD-KRD 12P-1000				06
	1	- -	Left Panel Assembly			J (V786610)		
	1	- -	Left Panel Assembly			Q,V (V842830)		
	2	- -	Center Panel Assembly			J (V786620)		
	2	- -	Center Panel Assembly			Q,V (V842860)		
	3	- -	Right Panel Assembly			J (V786630)		
	3	- -	Right Panel Assembly			Q,V (V842840)		
*	4	V7866600	Score Support					
*	5	V7872600	Top Board Assembly					
	5a	VF179400	Bushing Black				2	01
*	5b	V7874000	Hinge				3	04
	5c	EP030240	Bind Head Tapping Screw-1	3.5X12 MFZN2Y			6	01
*	6	V7751800	Keyboard Assembly	16M C49 EBUS UK				
*	7	V8616400	Keyboard Assembly	16M C49 EBUS LK				
	8	- -	Front Rail U Assembly	UPPER		(V787100)		
	9	- -	Front Rail L Assembly	LOWER		(V946700)		
	10	- -	Floppy Disk Drive Unit			(V787090)		
	11	- -	Panel Holder L	LEFT		(V787160)		
	12	- -	Panel Holder R	RIGHT		(V787170)		
	13	- -	Support, Keyboard			(V787210)		
	14	- -	Holder, Upper Keyboard			(V787060)		
	16	CB817510	Cord Binder	S-14B			7	03
	17	EP600140	Bind Head Tapping Screw-B	3.0X10 MFZN2BL			41	01
	18	VI064600	Bind Head Tapping Screw-B	3.0X20 MFZN2Y			7	01
	19	EP600250	Bind Head Tapping Screw-B	3.0X8 MFZN2Y			8	01
	20	EP030250	Bind Head Tapping Screw-1	3.5X14 MFZN2BL			7	01
	21	EG330360	Bind Head Screw	3.0X6 MFZN2BL				01
	22	- -	GND Wire Black	L=30 1P B6		(V782330)	2	
	23	- -	GND Wire Black	L=90 1P B6		(V868510)		
	24	VU481600	Bind Head Tapping Screw-B	3.0X25 MFZN2BL			2	01
	25	03765370	Flat Washer	3.0X8X0.5 MFZN2Y			3	01
	26	EG330060	Bind Head Screw	3.0X10 MFZN2Y				01
		- -	Floppy Disk Drive Unit			(V787090)		
	F1	V6492300	Floppy Disk Drive	ALPS DF354H		MUSIC DISK RECORDER		13
	F2	- -	Holder, FDD			(V787040)	2	
	F3	VC886900	Insulator, FDD				4	02
	F4	VF916400	Cup Screw	3.0X7.5 MFZN2Y			4	01
	F5	- -	Adhesive Tape Black	#5 15X30m		(V256440)		
*		V8453600	Cable Kit 1	1				
	1	- -	Connector Assembly	DM-LCD 8P/9P-1000		(V893240)		
	3	- -	Connector Assembly	DM-DRV-MKS KRD4 7P		(V893230)		
	4	- -	Connector Assembly	PKH PH 16P		(V810320)		
	5	- -	Connector Assembly	KRD-KRD 4P-1100		(VK12830)		
	6	- -	Connector Assembly	FDD XH 3P		(V779260)		
	9	CB069250	Cord Holder	BK-1			17	01
	9	VV558400	Cord Binder	AZ-100			17	01
*		V8453700	Cable Kit 2	2				
	1	- -	Connector Assembly	XH-XH XH 6P		(V810540)		
	2	- -	Connector Assembly	ACC-SP XH 8P		(V779330)		
	3	- -	Connector Assembly	KRD-KRD 4P-500		(VK11210)		
	4	VJ981200	Connector Assembly	KRD-KRD 6P-300				04
	5	- -	Connector Assembly	PH-PH PH 5P		(V779340)		
	7	CB069250	Cord Holder	BK-1			5	01
	7	VV558400	Cord Binder	AZ-100			5	01

*: New Parts

RANK: Japan only

■ LEFT PANEL ASSEMBLY

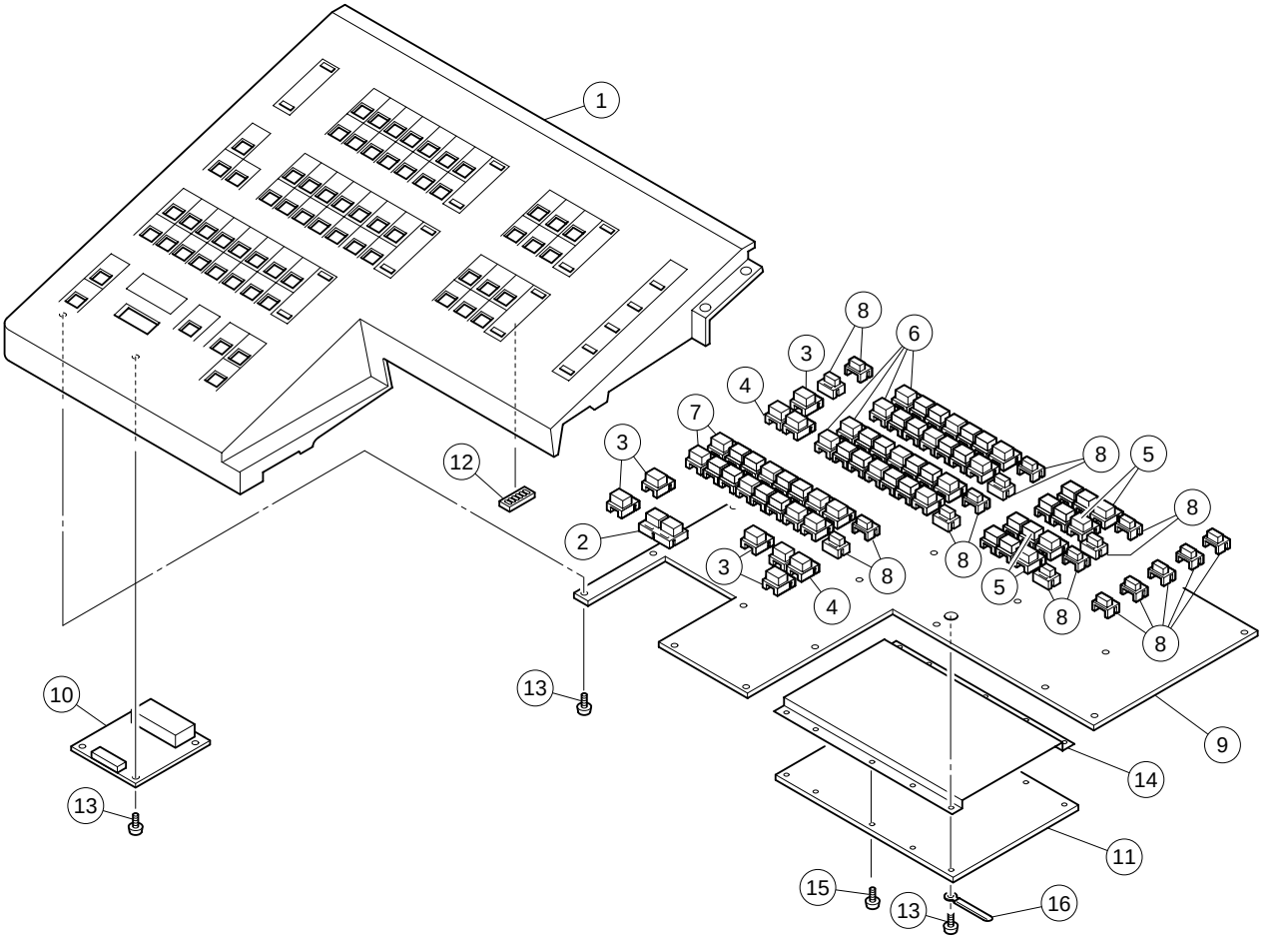

	REF NO.	PART NO.	DESCRIPTION			REMARKS	QTY	RANK
			LEFT PANEL ASSEMBLY			EL-100		
		- -	Left Panel Assembly			J (V786610)		
		- -	Left Panel Assembly			Q,V (V842830)		
		VK101500	Connector Assembly	KRD-KRD 10P-150				06
		- -	Connector Assembly	KRD-KRD 14P-300		(VK10650)		
		- -	Connector Assembly	KRD-KRD 9P-250		(VK10420)		
		- -	Connector Assembly	KRD-KRD 13P-350		(VK10890)		
*	1	V7847300	Left Panel			J		
*	1	V8430500	Left Panel			Q,V		
*	2	V7867900	Rubber Button	B x2		TEMPO UP/DPWN		
*	3	V7868500	Rubber Button	C1 x1		SUSTAIN(UPPER),KEYBOARD PERCUSSION(LOWER,PEDAL), RHYTHM(FILL IN), INTRO. ENDING	5	
*	4	V7868400	Rubber Button	C2 x2		RHYTHM(START,SYNCHRO START),SUSTAIN(LOWER, PEDAL)	2	
*	5	V7868300	Rubber Button	C3 x3		LEAD/PEDAL VOICE(VIOLIN,.. .,TO LOWER)	4	
*	6	V7868200	Rubber Button	C7 x7		UPPER/LOWER KEYBOARD VOICE(STRINGS,...,2)	4	
*	7	V7868000	Rubber Button	C8 x8		RHYTHM(SEQ.1,...,2)	2	
*	8	V7868900	Rubber Button	D		BASIC REGIST. 1-5, VOLUME(MAX/MIN)	17	
*	9	V7712600	Circuit Board	PN1				
*	10	V7712900	Circuit Board	TEMPO				
*	11	V7712800	Circuit Board	DRV				
*	12	V7886100	Shader				6	
	13	EP600250	Bind Head Tapping Screw-B	3.0X8 MFZN2Y			30	01
	14	- -	DRV Cover A	A		(V836530)		
	15	EG330360	Bind Head Screw	3.0X6 MFZN2BL			2	01
	16	CB817510	Cord Binder	S-14B			4	03

*: New Parts

RANK: Japan only

■ RIGHT PANEL ASSEMBLY

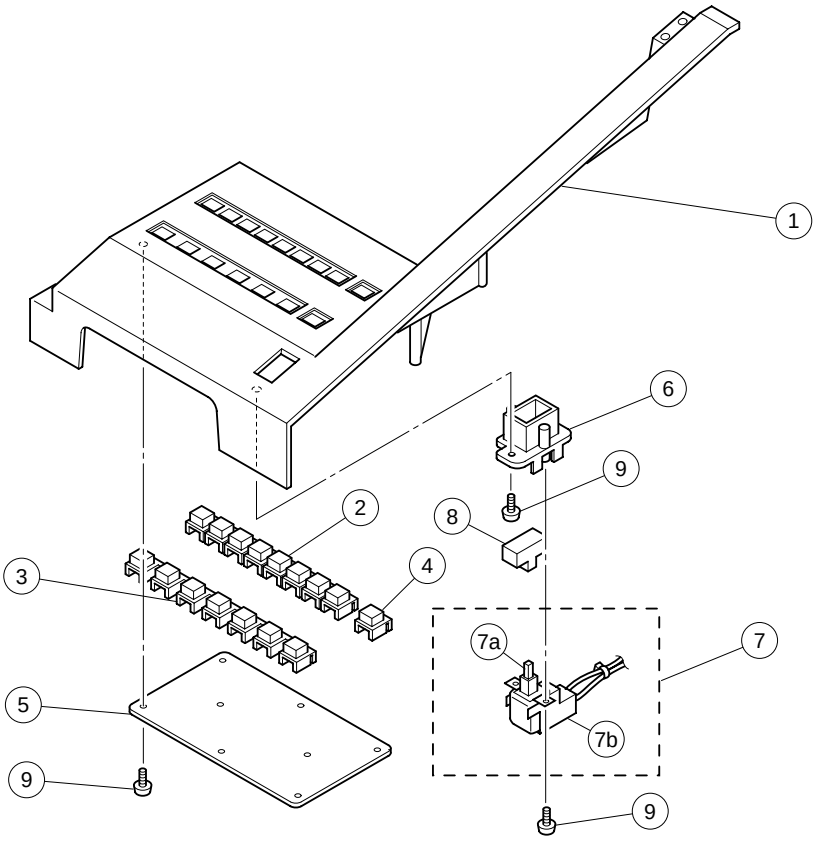

	REF NO.	PART NO.	DESCRIPTION			REMARKS	QTY	RANK
			RIGHT PANEL ASSEMBLY			EL-100		
		- -	Right Panel Assembly			J (V786630)		
		- -	Right Panel Assembly			Q,V (V842840)		
		- -	Connector Assembly	KRD-KRD 3P-1000		(VK12680)		
		- -	Connector Assembly	KRD-KRD 14P-1000		(VK12780)		
*	1	V7847900	Right Panel			J		
*	1	V8430700	Right Panel			Q,V		
*	2	V7869000	Rubber Button	E x8		RECORD(UPPER,..,CONTROL), PLAY(UPPER,..,CONTROL),		
*	3	V7869100	Rubber Button	F x7		PAUSE,..,CUSTOM PLAY		
*	4	V7869200	Rubber Button	G x1		SHIFT		
*	5	V7712700	Circuit Board	PN2				
	6	VN622200	Power Switch Holder					03
*	7	V8780500	Power Switch Assembly	PSW L=700 VH 5P				
⚠	7a	VC843500	Push Switch	SDDLB1216A J.U.C.S		POWER		03
	7b	V5800800	Switch Cover	IVORY/BLACK				01
	8	VK782100	Button Red	PSW		POWER		02
	9	EP600250	Bind Head Tapping Screw-B	3.0X8 MFZN2Y			12	01

*: New Parts

RANK: Japan only

■ CENTER PANEL ASSEMBLY

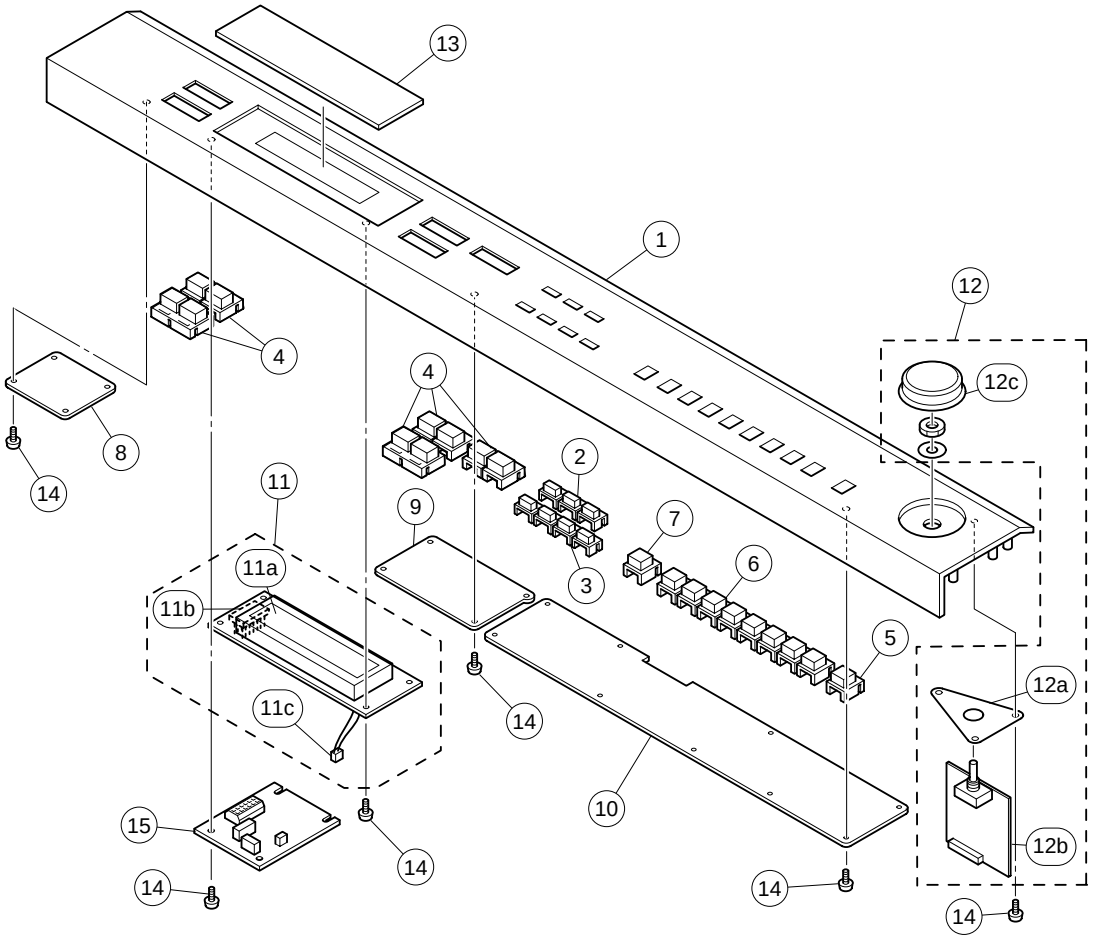

	REF NO.	PART NO.	DESCRIPTION			REMARKS	QTY	RANK
			CENTER PANEL ASSEMBLY			EL-100		
		- -	Center Panel Assembly			J (V786620)		
		- -	Center Panel Assembly			Q,V (V842860)		
		VK110800	Connector Assembly	KRD-KRD 4P-450				05
		- -	Connector Assembly	KRD-KRD 5P-650		(VK11640)		
		- -	Connector Assembly	KRD-KRD 13P-800		(VK12180)		
*	1	V7847600	Center Panel			J		
*	1	V8430600	Center Panel			Q,V		
*	2	V7867800	Rubber Button	A3 x3		DISPLAY SELECT(VOICE DISPLAY,..,A.B.C.M.O.C.)		
*	3	V7867700	Rubber Button	A4 x4		DISPLAY SELECT(FOOT SW., ...,TREMOLO(FAST))		
*	4	V7867900	Rubber Button	B x2		DATA CONTROL,PAGE	5	
*	5	V7868500	Rubber Button	C1 x1		REG. MEMORY(D.)		
*	6	V7868000	Rubber Button	C8 x8		REG. MEMORY(1-8)		
*	7	V7868600	Rubber Button	H x1		REG. MEMORY(M./TO DISK)		
*	8	V7763100	Circuit Board	CP1				
*	9	V7763200	Circuit Board	CP2				
*	10	V7763300	Circuit Board	CP3				
*	11	V7846200	LCD Unit			} It applies from May		
*	11	V9365500	LCD Unit			} First lot		
	11a	- -	LCD	EW20200YMY		(V784600)		
	11b	- -	Pin Header	MDF7 14P TE		(V767510)		
	11c	- -	Connector Assembly	L=110 PH-2P		(V784630)		
	12	- -	MVR Unit			(V786950)		
	12a	- -	Holder, MVR			(V787020)		
*	12b	V7764000	Circuit Board	MVR				
	12c	VK784100	Knob, VR					02
	13	VL587500	LCD Cover					06
	14	EP600250	Bind Head Tapping Screw-B	3.0X8 MFZN2Y			28	01
*	15	V7661000	Circuit Board	LCD				

*: New Parts

RANK: Japan only

■ KEYBOARD ASSEMBLY

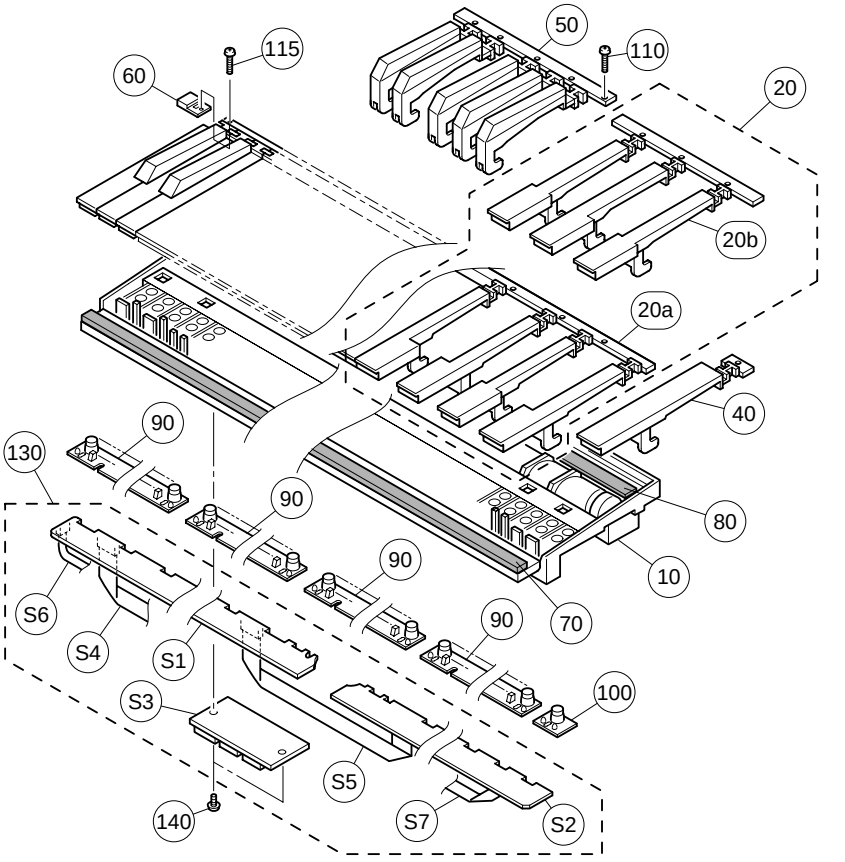

	REF NO.	PART NO.	DESCRIPTION			REMARKS			RANK
			KEYBOARD ASSEMBLY	16M C49 EBUS		EL-100			
*		V7751800	Keyboard Assembly	16M C49 EBUS UK		UK			
*		V8616400	Keyboard Assembly	16M C49 EBUS LK		LK			
	10	- -	Frame	C49			(V001510)		
	20	VH1809C0	White Key	16L CEGBDFA				4	03
	20a	VH180900	White Key	16L CEGB				4	03
	20b	VH181000	White Key	16L DFA				4	03
	40	VH181100	White Key	16L C'					01
	50	VH181200	Black Key	16L #				4	03
	60	V0016200	Key Spacer	16M C49					03
	70	VE968400	Felt						02
	80	VE968300	Rubber Sheet						02
	90	VU328400	Rubber Contact	16M OCT 2M 12KEYS				4	06
	100	VU328500	Rubber Contact	16M C' 2M 1KEY					05
	110	VB205200	Bind Head Tapping Screw-P	3.0X16 MFZN2BL				16	01
	115	VB658700	Bind Head Tapping Screw-P	3.0X14 MFZN2Y					01
	120	TX920280	Grease	G-31KA 50g					10
	130	- -	Circuit Board Assembly	16M C49 EBUS UK		UK	(V862410)		
	130	- -	Circuit Board Assembly	16M C49 EBUS LK		LK	(V862420)		
	140	EP630220	Bind Head Tapping Screw-P	3.0X8 MFZN2BL				2	01
		- -	Circuit Board Assembly	16M C49 EBUS UK		UK	(V862410)		
		- -	Circuit Board Assembly	16M C49 EBUS LK		LK	(V862420)		
	S1	V0015800	Circuit Board	MK-L					09
	S2	VU648200	Circuit Board	MK-H					09
*	S3	V7662900	Circuit Board	EMKS49A (UK)		UK			
*	S3	V8622400	Circuit Board	EMKS49B (LK)		LK			
	S4	- -	Cable	L-N 12P			(V862460)		
	S5	VU659500	Cable	12P					02
	S6	- -	Cable	L-B 6P			(V862450)		
	S7	- -	Cable	49H 5P			(V862440)		

*: New Parts

RANK: Japan only

■ PANEL CASE UNIT

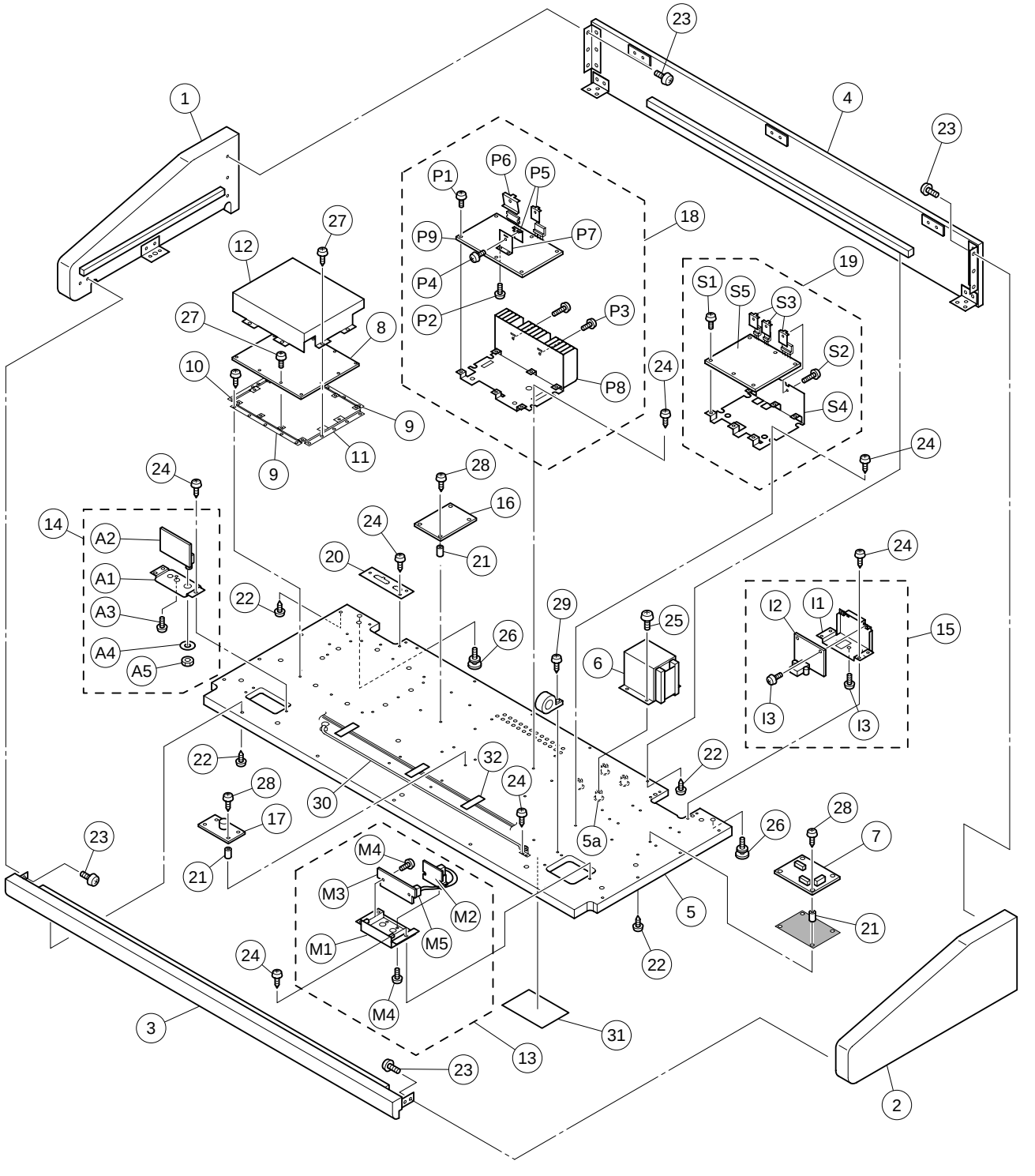

	REF NO.	PART NO.	DESCRIPTION			REMARKS		QTY	RANK
			PANEL CASE UNIT			EL-100			
		- -	Panel Case Unit			J	(V786600)		
		- -	Panel Case Unit			Q	(V842800)		
		- -	Panel Case Unit			V	(V842810)		
		CB069250	Cord Holder	BK-1				4	01
		- -	Connector Assembly	KRD-KRD 4P-100			(VK09740)		
*		V8453800	Cable Kit 3	3					
		- -	Connector Assembly	TO HOST KDR8P-1450			(V845440)		
		- -	Connector Assembly	VH-VH VH 4P			(V845540)		
*	1	V7874400	Side Cover Assembly L	LEFT					
*	2	V7874500	Side Cover Assembly R	RIGHT					
*	3	V7875400	Front Rail Assembly						
*	4	V7876000	Back Top Board Assembly						
*	5	V7881500	Keybed Assembly						
	5a	VA789400	Nut	B 4.0X11.5 MFZN2BL				4	01
⚠ *	6	X0116A00	Power Transformer	J		J			
⚠ *	6	X0118A00	Power Transformer	N IEC65 E		Q,V			
*	7	V7824900	Circuit Board	PRM		J			
*	7	V8034300	Circuit Board	PRM		Q			
*	7	V8434500	Circuit Board	PRM		V			
*	8	V7553100	Circuit Board	DM					
	9	- -	Holder, DM				(V787780)	2	
	10	- -	Holder, DM L	LEFT			(V787790)		
	11	- -	Holder, DM R	RIGHT			(V787800)		
	12	- -	DM Shield Cover Assembly				(V787810)		
	13	- -	MIDI Unit				(V787700)		
	14	- -	Accessory Unit				(V787710)		
	15	- -	AC Inlet Unit			J	(V787670)		
	15	- -	AC Inlet Unit			Q	(V843130)		
	15	- -	AC Inlet Unit			V	(V843140)		
*	16	V7733200	Circuit Board	EQ					
*	17	V7764200	Circuit Board	TA					
*	18	V7817300	PU Assembly	J 20Wx2		J			
*	18	V8036000	PU Assembly	E 20Wx2		Q,V			
*	19	V7817400	SWPS Assembly	J 5V(2A)&3.3V(2A)		J			
*	19	V8036200	SWPS Assembly	E 5V(2A)&3.3V(2A)		Q,V			
	20	- -	PS Plate				(V788570)		
	21	CB040950	Spacer	NT				12	03
	22	EN630190	Truss Head Tapping Screw-1	3.5X25 MFZN2BL				18	01
	23	EP030190	Bind Head Tapping Screw-1	3.5X16 MFZN2Y				10	01
	24	EP030240	Bind Head Tapping Screw-1	3.5X12 MFZN2Y				35	01
	25	EG340030	Bind Head Screw	4.0X12 MFZN2Y				4	01
	26	VN887900	Guide Screw	6.0X14				2	03
	27	EP600130	Bind Head Tapping Screw-B	3.0X6 MFZN2Y				18	01
	28	EP030470	Bind Head Tapping Screw-1	3.5X20 MFZN2Y				12	01
	29	EN630230	Truss Head Tapping Screw-1	3.5X14 MFZN2Y				5	01
*	30	V8204900	Stay						
	31	- -	Name Plate	J		J	(V843290)		
	31	- -	Name Plate	THA		Q	(V843260)		
	31	- -	Name Plate	MEX		V	(V843270)		
	32	VP834600	Adhesive Tape	12X50				8	02
		- -	MIDI Unit				(V787700)		
	M1	V0029000	MIDI Plate						09
*	M2	V7552800	Circuit Board	MIDI					
*	M3	V7553000	Circuit Board	TO HOST					
	M4	EP600190	Bind Head Tapping Screw-B	3.0X8 MFZN2BL				4	01
	M5	- -	Connector Assembly	KRD-KRD 6P-100			(VK09800)		
		- -	Accessory Unit				(V787710)		
	A1	- -	Accessory Plate				(V787720)		
*	A2	V7734200	Circuit Board	ACC					
	A3	EP600190	Bind Head Tapping Screw-B	3.0X8 MFZN2BL					01
	A4	VB441300	Flat Washer	12.0X16 0.5 MFZN2					01
	A5	VB508600	Hexagonal Nut	12.0 14X2 MFZN2BL					01
		- -	AC Inlet Unit			J	(V787670)		
		- -	AC Inlet Unit			Q	(V843130)		
		- -	AC Inlet Unit			V	(V843140)		
	I1	- -	Plate, AC Inlet				(V787680)		

*: New Parts

RANK: Japan only

	REF NO.	PART NO.	DESCRIPTION			REMARKS		QTY	RANK
*	I2	V7877700	Circuit Board	INLET		J			
*	I2	V8034500	Circuit Board	INLET		Q			
*	I2	V8158000	Circuit Board	INLET		V			
	I3	EP600190	Bind Head Tapping Screw-B	3.0X8 MFZN2BL				4	01
*		V7817300	PU Assembly	J 20Wx2		J			
*		V8036000	PU Assembly	E 20Wx2		Q,V			
		- -	Silicon Grease	G-746			(0412125)		
	P1	EP640410	Bind Head Tapping Screw-B	4.0X8 MFZN2Y				6	01
	P2	EP640410	Bind Head Tapping Screw-B	4.0X8 MFZN2Y				2	01
	P3	EP600220	Bind Head Tapping Screw-B	3.0X10 MFZN2Y				2	01
	P4	EP600390	Bind Head Tapping Screw-B	3.0X16 MFZN2Y					01
	P5	VT461100	Transistor Holder A	A				2	03
	P6	VT461200	Transistor Holder B	B					03
	P7	- -	TR Holder Plate				(V810150)		
	P8	- -	Heat Sink				(V810140)		
	P9	- -	Circuit Board	PU		J	(V780650)		
	P9	- -	Circuit Board	PU		Q,V	(V803190)		
*		V7817400	SWPS Assembly	J 5V(2A)&3.3V(2A)		J			
*		V8036200	SWPS Assembly	E 5V(2A)&3.3V(2A)		Q,V			
		- -	Silicon Grease	G-746			(0412125)		
	S1	EP640410	Bind Head Tapping Screw-B	4.0X8 MFZN2Y				6	01
	S2	EP600220	Bind Head Tapping Screw-B	3.0X10 MFZN2Y				3	01
	S3	VT461100	Transistor Holder A	A				3	03
	S4	- -	SWPS Chassis				(V810160)		
	S5	- -	Circuit Board	SWPS		J	(V780670)		
	S5	- -	Circuit Board	SWPS		Q,V	(V803200)		
*		V8453800	Cable Kit 3	3					
	1	- -	Connector Assembly	VH-VH VH 2P			(V779270)		
	2	- -	Connector Assembly	XH-XH XH 2P			(V779290)		
	3	- -	Connector Assembly	XH-XH XH 3P			(V779300)		
	4	- -	Connector Assembly	CH-CH VH 4P			(V779280)		
	5	CB069250	Cord Holder	BK-1				5	01
	5	VV558400	Cord Binder	AZ-100				5	01

*: New Parts

RANK: Japan only

■ SPEAKER BOX UNIT

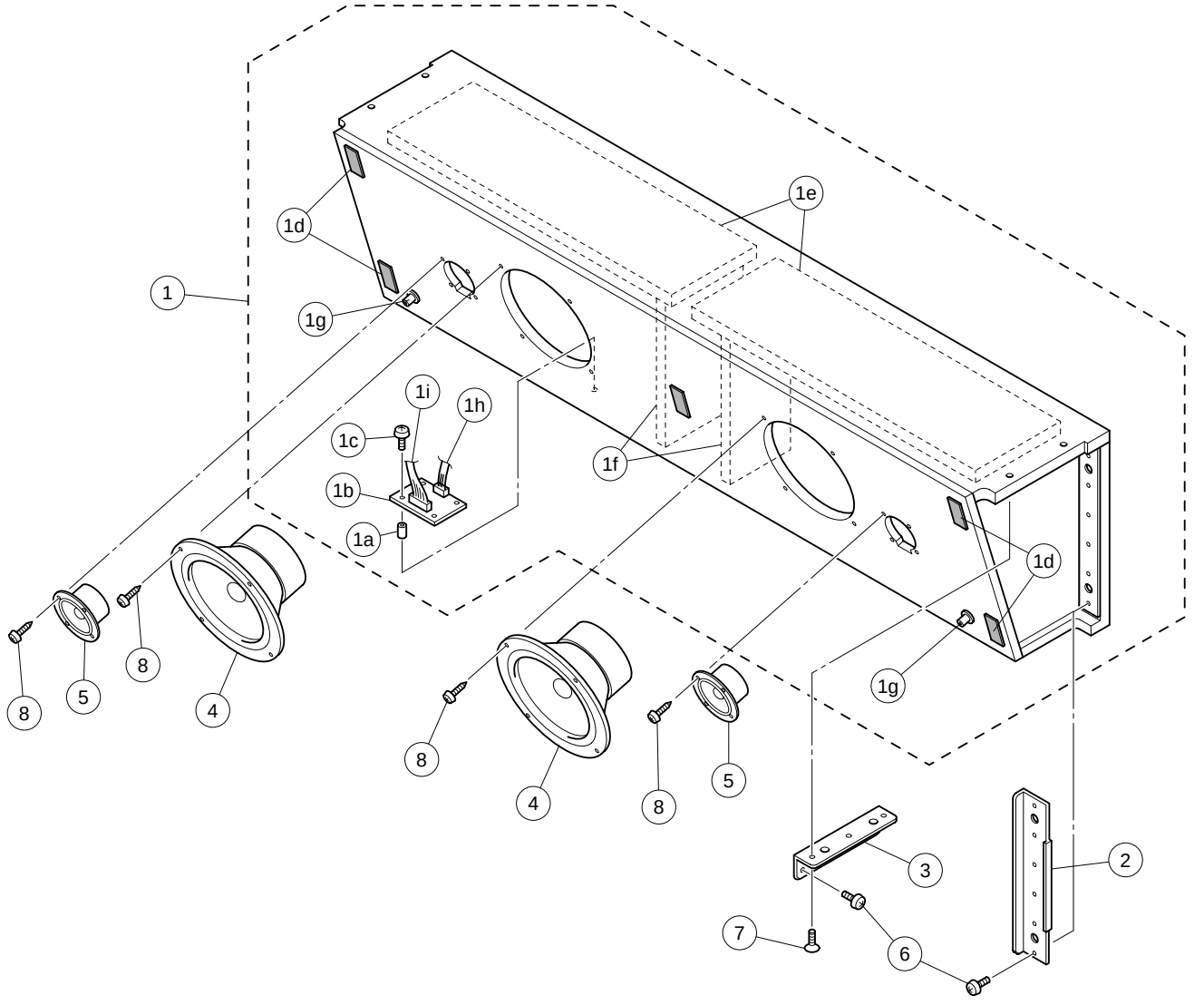

	REF NO.	PART NO.	DESCRIPTION			REMARKS	QTY	RANK
		- -	SPEAKER BOX UNIT			EL-100 (V784270)		
*	1	V7878300	Speaker Box Assembly					
	1a	CB040950	Spacer				4	03
*	1b	V7763600	Circuit Board	NW				
	1c	EP030470	Bind Head Tapping Screw-1	3.5X20 MFZN2Y			4	01
	1d	VJ933500	Dual Lock Black				5	05
	1e	- -	Cushion Black	500X7XT1		(V787910)	2	
	1f	- -	Cushion Black	200X5XT1		(V787920)	2	
	1g	- -	Strike	PK13-1		(V597360)	2	
	1h	- -	Connector Assembly	NW		(V779310)		
	1i	- -	Connector Assembly	NW-SP XH-8P		(V779320)		
	2	VJ907600	Angle Plate, Speaker	1.6 C			2	03
	3	- -	Holder, Speaker Box			(V788000)	2	
*	4	X0263A00	Speaker	16.0cm 4 ohm 40W		WOOFER	2	
*	5	X0264A00	Speaker	5.0cm 4 ohm 40W		TWEETER	2	
	6	EP040230	Bind Head Tapping Screw-1	4.0X14 MFZN2Y			18	01
	7	VH736500	Flat Head Tapping Screw-1	4.0X12 MFZN2Y			6	01
	8	EP040250	Bind Head Tapping Screw-1	4.0X16 MFZN2BL			16	01

*: New Parts

RANK: Japan only

■ PEDAL BOX UNIT

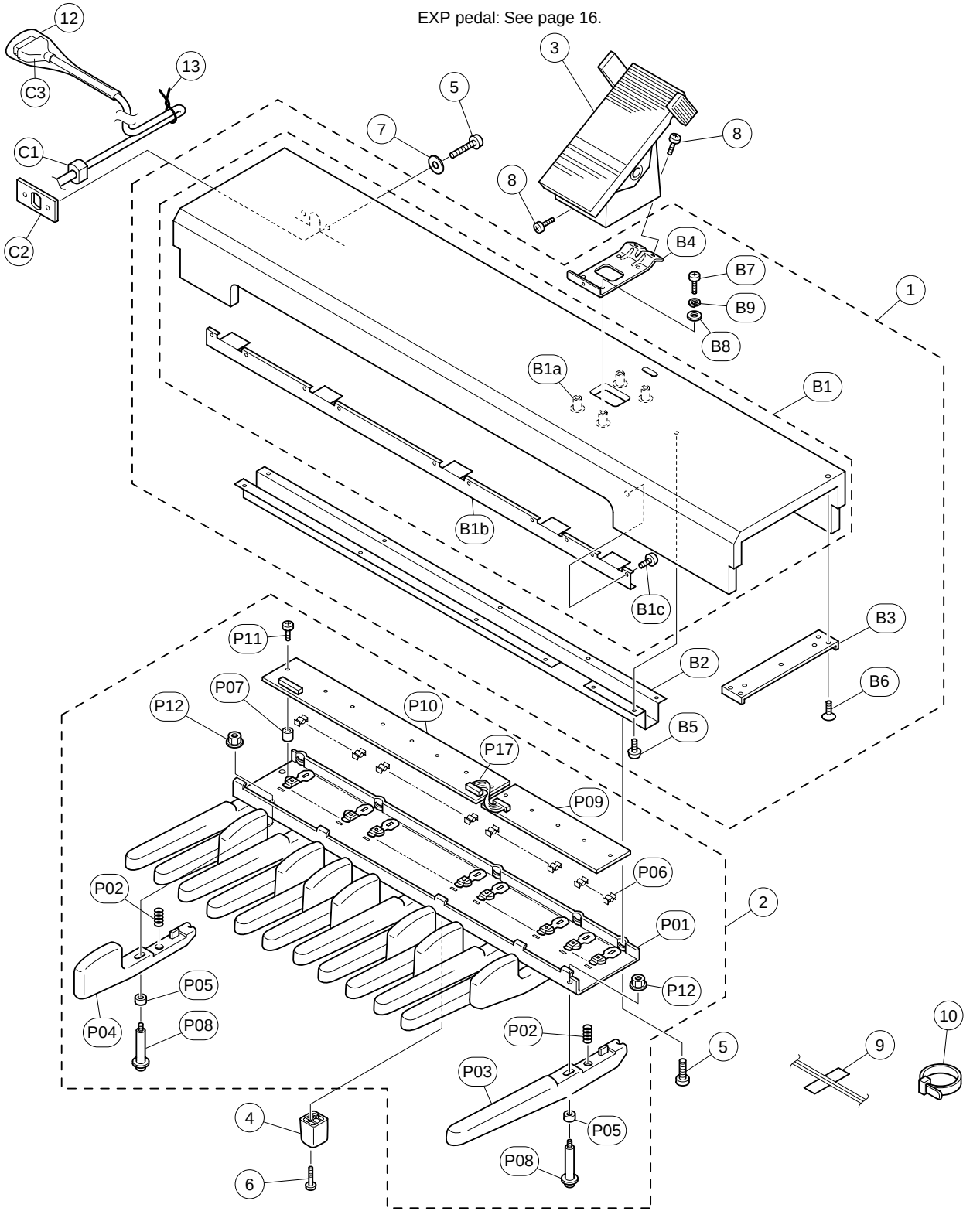

	REF NO.	PART NO.	DESCRIPTION			REMARKS	QTY	RANK
		- -	PEDAL BOX UNIT			EL-100 (V784320)		
		VK109600	Connector Assembly	KRD-KRD 6P-400				05
*		V8225800	PKL Cable Unit					
*	1	V7884200	Pedal Box Assembly					
	2	VN559900	Pedal Keyboard Assembly	S C20				26
	3	VN541100	EXP Pedal	L/R FOOT SW				16
	4	VB299300	Block, PK Support Black					03
	5	VL063800	Bind Head Tapping Screw-S	4.0X25 MFZN2BL			7	01
	6	VB299400	Bind Head Tapping Screw-S	3.0X25 MFZN2Y			2	01
	7	ET500040	Flat Washer	4.0X10X0.8 MFZN2BL			2	01
	8	VA221600	Bind Head Screw	4.0X10 MFZN2BL			3	01
	9	VP834600	Adhesive Tape	12X50			2	02
	10	CB069250	Cord Holder	BK-1				01
	12	- -	Sheet	0.5X200X200		(V929630)		
	13	CB070450	Cord Binder	L=100				01
*		V8225800	PKL Cable Unit					
	C1	CB806850	Cord Strain Relief	SR-6N3-4				02
	C2	VP006600	Bracket					01
	C3	- -	Connector Assembly	PKL		(V780690)		
*		V7884200	Pedal Box Assembly					
	B1	- -	Pedal Box			(V788440)		
	B1a	ET200040	Nut	B 4.0X11.5 MFZN2Y			4	01
	B1b	- -	PK Rail F	FRONT		(V788490)		
	B1c	EP030240	Bind Head Tapping Screw-1	3.5X12 MFZN2Y			9	01
	B2	- -	PK Rail R	REAR		(V788500)		
	B3	- -	Holder, Pedal Box			(V788510)	2	
	B4	VN801900	Holder, EXP					07
	B5	EP030240	Bind Head Tapping Screw-1	3.5X12 MFZN2Y			11	01
	B6	EM030280	Flat Head Tapping Screw-1	3.5X12 MFZN2Y			10	01
	B7	EG340210	Bind Head Screw	4.0X14 MFZN2Y			4	01
*	B8	V9420900	Washer	4.0 MFZN2Y				
	B9	03765170	Spring Washer	#2 4.0 MFZN2Y				01
		VN559900	Pedal Keyboard Assembly	S C20				26
	P01	VH534400	PK Frame	C20 1M				09
	P02	VP377600	Spring	SWPB			20	01
	P03	VH533300	White Key, PK Dark Gray				12	04
	P04	VH533900	Black Key, PK Black				8	04
	P05	CB057810	Support Rubber Black				20	01
	P06	CB057820	Rubber Contact	A			20	01
	P07	VH535500	Spacer				13	01
	P08	VP919200	Screw	4.0 MFZN2B			20	01
	P09	VJ661000	Circuit Board	PKH				07
	P10	VQ471900	Circuit Board	PKL				10
	P11	VH553800	Bind Head Tapping Screw-S	3.0X12 MFZN2Y			13	01
	P12	VP919300	Hexagonal Nut	4.0M FZN2B			20	01
	P14	- -		G-501		(0412113)		
	P17	VJ989200	Connector Assembly	KRD-KRD 10P-100				05

*: New Parts

RANK: Japan only

■ EXP PEDAL

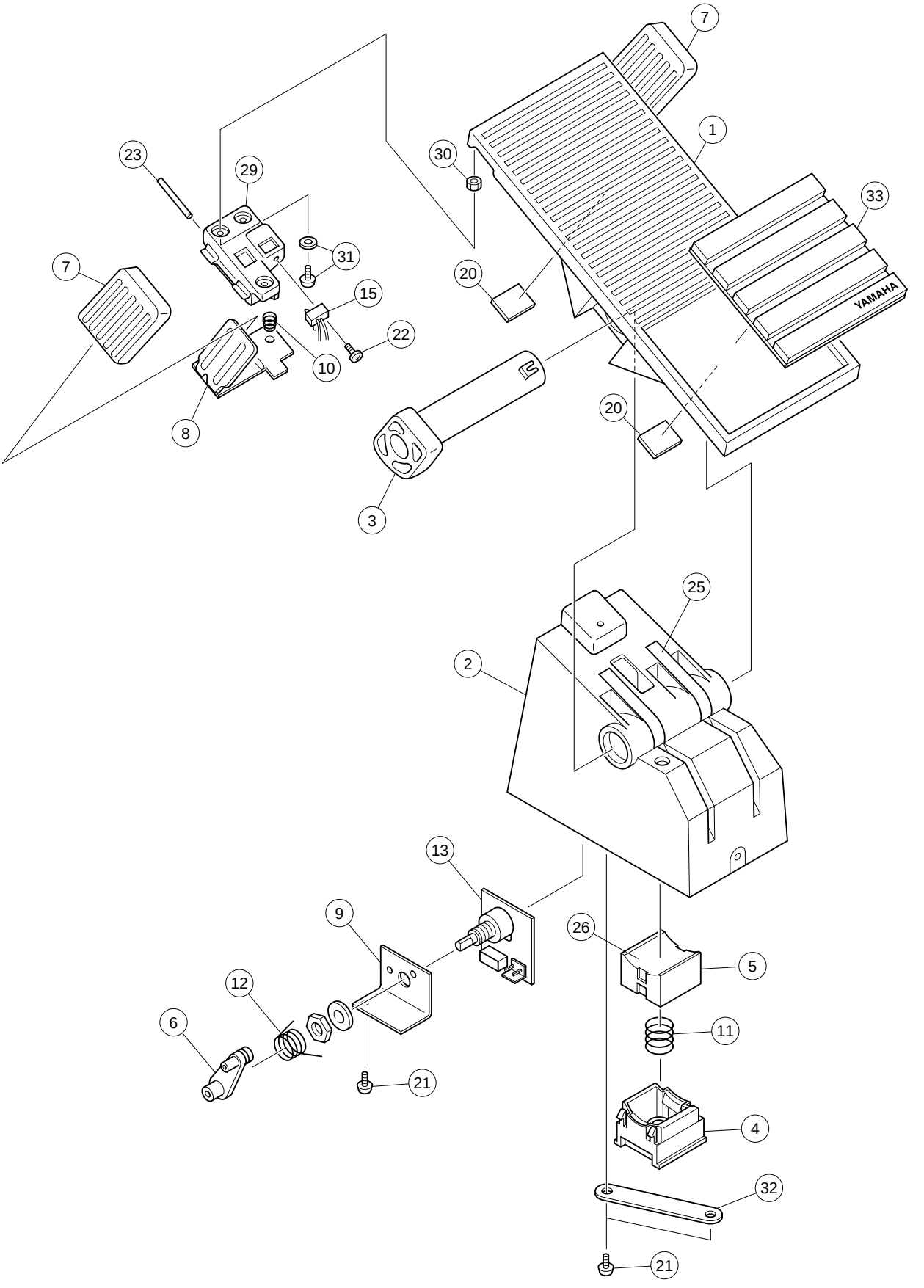
7
1
23
29
30
33
31
7
20
15
YAMAHA
22
10
8
20
3
25
2
13
9
26
5
12
6
11
21
4
32
21

REF NO.	PART NO.	DESCRIPTION			REMARKS	QTY	RANK
	VN541100	EXP PEDAL	L/R FOOT SW		EL-100		16
1	VF119100	EXP Pedal Plate	EXP				06
2	VF119200	EXP Frame	EXP				06
3	VA227300	Shaft Black					04
4	VA227400	Case					12
5	VA227500	Block					01
6	VA227600	Actuator					02
7	VF118800	Cap	EXP			2	03
8	VF119400	Lever				2	03
9	VA228000	Plate	1				01
10	VB512400	Coil Spring				2	01
11	VA228200	Coil Spring					01
12	VA228300	Coil Spring					01
13	VN564800	Circuit Board	EXP				07
14	VA229000	Felt Black	16X12X1			2	01
15	VA228500	Micro Switch	SPPB13001A		L/R FOOT SW	2	01
16	- -	Connector Assembly Black	7P		(VN54140)		
17	VB304500	Connector Housing	PH 4P				01
18	VB936800	Connector Contact	SPH-002T-P0.5S			4	01
20	VF119000	Felt				2	02
21	EP600290	Bind Head Tapping Screw-P	3.0X6 MFZN2Y			3	01
22	VA226000	Pan Head Tapping Screw-P	2.0X8 MFZN2BL			2	01
23	VB513500	Spring Pin	4.0X28			2	01
24	- -	Grease	G-902		(VA01020)		
25	VB297800	Dust Proof Tape				2	01
26	VC043500	Skin Yellow					02
27	- -		G-501		(0412113)		
28	VB513000	Felt Black	16X6X1.5			2	03
29	VE675600	Lever Holder Black				2	01
30	VB514400	Insert Nut	M3.0 SD-30-02			6	01
31	VP816500	Pan Head Screw	SP 3.0X7 MFZN2BL			6	01
32	VF119300	Block Stopper					01
33	VC116100	Pedal Mat Black					05
34	- -	Connector Assembly Gray	7P		(VN54150)		

*: New Parts

RANK: Japan only

■ BENCH

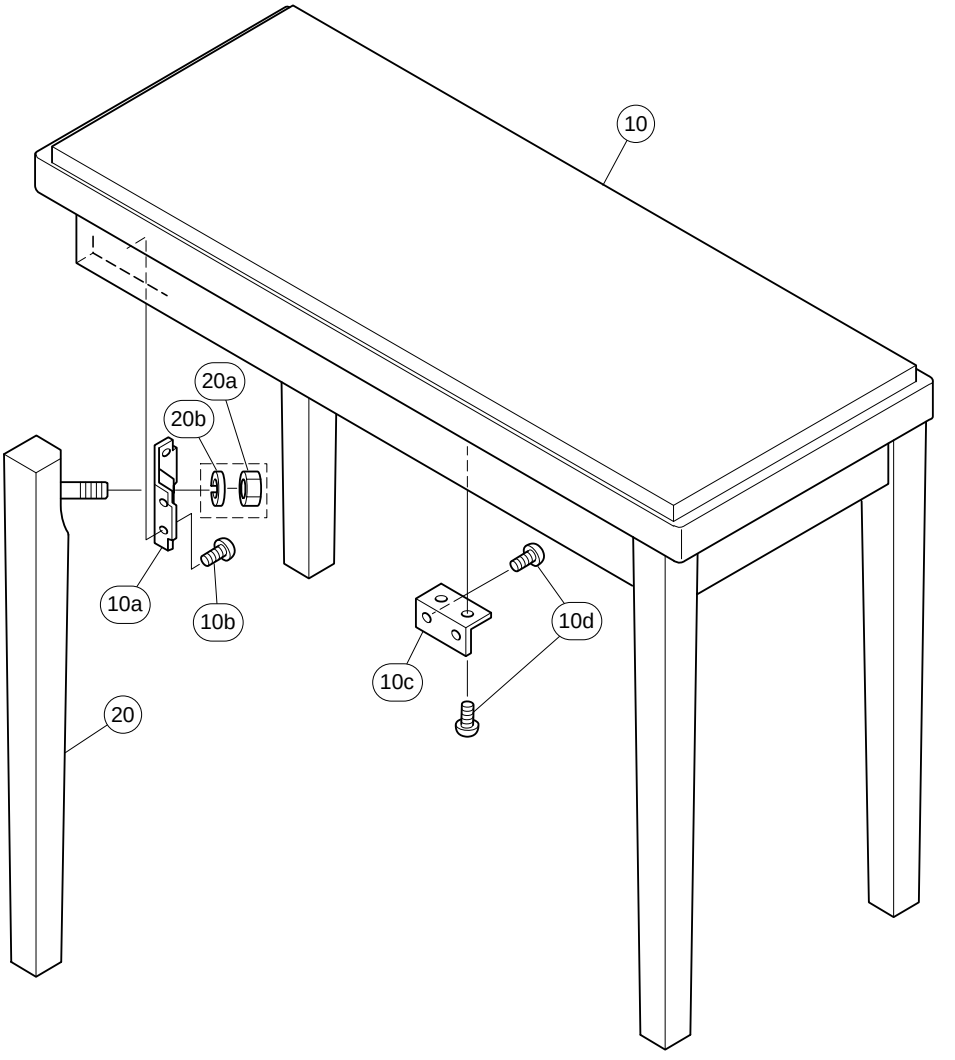

REF NO.	PART NO.	DESCRIPTION			REMARKS	QTY	RANK
	- -	BENCH	ELB ROSE		EL-100 (V786490)		
10	V5532900	Bench Board Assembly	BC-100DR				16
10a	AA016480	Holder, Leg				4	02
10b	EP030190	Bind Head Tapping Screw-1	3.5X16 MFZN2Y			16	01
10c	VC969300	Holder, Bench Board				4	03
10d	EP030170	Bind Head Tapping Screw-1	3.5X14 MFZN2Y			16	01
* 20	V7865000	Leg Assembly	ROSE			4	
20a	03761250	Hexagonal Nut	#1 10.0X1.25 MFZN2			4	01
20b	03765820	Spring Washer	#2 10.0 MFZN2Y			4	01
		ACCESSORY					
	- -	Wrench			(V688680)		

*: New Parts

RANK: Japan only

■ ELECTRICAL PARTS

	REF NO.	PART NO.	DESCRIPTION			REMARKS	QTY	RANK
			ELECTRICAL PARTS			EL-100		
*		V7734200	Circuit Board	ACC		(X0251A0)		
*		V7763100	Circuit Board	CP1		(V771300)(X0254B0)		
*		V7763200	Circuit Board	CP2		(V771300)(X0254B0)		
*		V7763300	Circuit Board	CP3		(V771300)(X0254B0)		
*		V7553100	Circuit Board	DM		(XZ592G0)		
*		V7553100	Circuit Board	DM		(XZ592H0)		
*		V7712800	Circuit Board	DRV		(X0162C0)		
*		V7662900	Circuit Board	EMKS49A (UK)		(X0092C0)		
*		V8622400	Circuit Board	EMKS49B (LK)		(X0092C0)		
*		V7733200	Circuit Board	EQ		(X0174B0)		
		VN564800	Circuit Board	EXP		(XK430C0)		07
*		V7877700	Circuit Board	INLET		J (X0337B0)		
*		V8034500	Circuit Board	INLET		Q (X0337B0)		
*		V8158000	Circuit Board	INLET		V (X0337B0)		
*		V7661000	Circuit Board	LCD		(X0261A0)		
*		V7552800	Circuit Board	MIDI		(X0091A0)		
		VU648200	Circuit Board	MK-H		(XR565C0)		09
		V0015800	Circuit Board	MK-L		(XU434A0)		09
*		V7763600	Circuit Board	NW		(X0253B0)		
		VJ661000	Circuit Board	PKH		(XH847A0)		07
		VQ471900	Circuit Board	PKL		(XM405A0)		10
*		V7712600	Circuit Board	PN1		(V776340)(X0160D0)		
*		V7712700	Circuit Board	PN2		(V776340)(X0160D0)		
*		V7764000	Circuit Board	MVR		(V776340)(X0160D0)		
*		V7712900	Circuit Board	TEMPO		(V776340)(X0160D0)		
*		V7824900	Circuit Board	PRM		J (X0336B0)		
*		V8034300	Circuit Board	PRM		Q (X0336B0)		
*		V8434500	Circuit Board	PRM		V (X0336B0)		
		- -	Circuit Board	PU		J (V780650)(X0153E0)		
		- -	Circuit Board	PU		Q,V (V803190)(X0153E0)		
		- -	Circuit Board	SWPS		J (V780670)(X0154B0)		
		- -	Circuit Board	SWPS		Q,V (V803200)(X0154B0)		
*		V7764200	Circuit Board	TA		(X0179B0)		
*		V7553000	Circuit Board	TO HOST		(X0090A0)		
*		V7734200	Circuit Board	ACC		(X0251A0)		
		- -	Jumper Wire	0.55		(VA07890)		
	C0001	UN837470	Electrolytic Cap.-BP	47.00 16.0V				01
	C0002	US063100	Ceramic Capacitor-B (chip)	1000P 50V K				01
	C0003	UN837470	Electrolytic Cap.-BP	47.00 16.0V				01
	C0004	US063100	Ceramic Capacitor-B (chip)	1000P 50V K				01
	C0007	US064100	Ceramic Capacitor-B (chip)	0.0100 50V K				01
	C0008	US145100	Ceramic Capacitor-F (chip)	0.1000 25V Z				01
	CN001	LB918060	Base Post Connector	XH 6P TE				01
	CN002	LB918080	Base Post Connector	XH 8P TE				01
	CN003	VB390000	Connector Base Post	PH 4P TE				01
	JK001	LB101870	Phone Jack	YKB21-5006		HEADPHONES		03
	JK002	VN134700	Pin Jack	2P YKC21-3040		AUX OUT L/R		01
	L0001	VB971100	Coil	FL5R200QN 20uH				01
	L0002	VB971100	Coil	FL5R200QN 20uH				01
	L0003	GE300670	Ferrite Bead	BL02RN2-R62T4				02
	L0004	VF456600	Coil	SBT-0180W 80uH				03
	L0005	VF456600	Coil	SBT-0180W 80uH				03
	R0001	VC731500	Metal Oxide Film Resistor	120.0 1W J				01
	R0002	HF455390	Carbon Resistor	390.0 1/4 J				01
	R0003	HF455390	Carbon Resistor	390.0 1/4 J				01
	R0004	VC731500	Metal Oxide Film Resistor	120.0 1W J				01
	R0007	RD356150	Carbon Resistor (chip)	1.5K 63M J				01
	R0008	RD356150	Carbon Resistor (chip)	1.5K 63M J				01
	R0009	RD355680	Carbon Resistor (chip)	680 63M J				01
	R0010	RD355680	Carbon Resistor (chip)	680 63M J				01
	WH001	- -	GND Wire Black	L=100x2 1P B6		(V846520)		
*		V7763100	Circuit Board	CP1		(V771300)(X0254B0)		
*		V7763200	Circuit Board	CP2		(V771300)(X0254B0)		
*		V7763300	Circuit Board	CP3		(V771300)(X0254B0)		
		- -	Jumper Wire	0.55		(VA07890)		
	CN001	VB858300	Connector Base Post	PH 4P SE				01
	CN002	VB858400	Connector Base Post	PH 5P SE				01

*: New Parts

RANK: Japan only

	REF NO.	PART NO.	DESCRIPTION			REMARKS	QTY	RANK
	CN003	VK015400	Connector Base Post	PH 13P SE				01
	DA001	VZ182300	Diode Array	DAP202K T146				01
	-015	VZ182300	Diode Array	DAP202K T146				01
	LD011	V7767400	LED	SLZ-981B-09-T1		DIS.SELECT(VOICE DISPLAY)		
	LD012	V7767400	LED	SLZ-981B-09-T1		DIS.SELECT(FOOT SW.)		
	LD013	V7767400	LED	SLZ-981B-09-T1		DIS.SELECT(EFFECT SET)		
	LD014	V7767400	LED	SLZ-981B-09-T1		DIS.SELECT(REGIST. SHIFT)		
	LD015	V7767400	LED	SLZ-981B-09-T1		DIS.SELECT(A.B.C. M.O.C.)		
	LD016	V7767400	LED	SLZ-981B-09-T1		DIS.SELECT(PITCH MIDI)		
	LD017	V7767400	LED	SLZ-981B-09-T1		DIS.SELECT(TREMOLO(FAST))		
	LD019	V7767400	LED	SLZ-981B-09-T1		REGISTRATION MEMORY 1		
	LD020	V7767400	LED	SLZ-981B-09-T1		REGISTRATION MEMORY 2		
	LD021	V7767400	LED	SLZ-981B-09-T1		REGISTRATION MEMORY 3		
	LD022	V7767400	LED	SLZ-981B-09-T1		REGISTRATION MEMORY 4		
	LD023	V7767400	LED	SLZ-981B-09-T1		REGISTRATION MEMORY 5		
	LD024	V7767400	LED	SLZ-981B-09-T1		REGISTRATION MEMORY 6		
	LD025	V7767400	LED	SLZ-981B-09-T1		REGISTRATION MEMORY 7		
	LD026	V7767400	LED	SLZ-981B-09-T1		REGISTRATION MEMORY 8		
	LD027	V7767400	LED	SLZ-981B-09-T1		REGISTRATION MEMORY D.		
	R0001	HF754470	Carbon Resistor	47.0 1/4 J				01
	-0004	HF754470	Carbon Resistor	47.0 1/4 J				01
*	SW001	V8889300	Push Switch	EVQ 11Y 07K		DATA CONTROL <		01
*	SW002	V8889300	Push Switch	EVQ 11Y 07K		DATA CONTROL <		01
*	SW003	V8889300	Push Switch	EVQ 11Y 07K		DATA CONTROL >		01
*	SW004	V8889300	Push Switch	EVQ 11Y 07K		DATA CONTROL >		01
*	SW005	V8889300	Push Switch	EVQ 11Y 07K		DATA CONTROL <		01
*	SW006	V8889300	Push Switch	EVQ 11Y 07K		DATA CONTROL <		01
*	SW007	V8889300	Push Switch	EVQ 11Y 07K		DATA CONTROL >		01
*	SW008	V8889300	Push Switch	EVQ 11Y 07K		DATA CONTROL >		01
*	SW009	V8889300	Push Switch	EVQ 11Y 07K		PAGE <		01
*	SW010	V8889300	Push Switch	EVQ 11Y 07K		PAGE >		01
*	SW011	V8889300	Push Switch	EVQ 11Y 07K		DIS.SELECT(VOICE DISPLAY)		01
*	SW012	V8889300	Push Switch	EVQ 11Y 07K		DIS.SELECT(FOOT SW.)		01
*	SW013	V8889300	Push Switch	EVQ 11Y 07K		DIS.SELECT(EFFECT SET)		01
*	SW014	V8889300	Push Switch	EVQ 11Y 07K		DIS.SELECT(REGIST. SHIFT)		01
*	SW015	V8889300	Push Switch	EVQ 11Y 07K		DIS.SELECT(A.B.C. M.O.C.)		01
*	SW016	V8889300	Push Switch	EVQ 11Y 07K		DIS.SELECT(PITCH MIDI)		01
*	SW017	V8889300	Push Switch	EVQ 11Y 07K		DIS.SELECT(TREMOLO(FAST))		01
*	SW018	V8889400	Push Switch	EVQ 11Y 05B		M./TO DISK		01
*	SW019	V8889300	Push Switch	EVQ 11Y 07K		REGISTRATION MEMORY 1		01
*	SW020	V8889300	Push Switch	EVQ 11Y 07K		REGISTRATION MEMORY 2		01
*	SW021	V8889300	Push Switch	EVQ 11Y 07K		REGISTRATION MEMORY 3		01
*	SW022	V8889300	Push Switch	EVQ 11Y 07K		REGISTRATION MEMORY 4		01
*	SW023	V8889300	Push Switch	EVQ 11Y 07K		REGISTRATION MEMORY 5		01
*	SW024	V8889300	Push Switch	EVQ 11Y 07K		REGISTRATION MEMORY 6		01
*	SW025	V8889300	Push Switch	EVQ 11Y 07K		REGISTRATION MEMORY 7		01
*	SW026	V8889300	Push Switch	EVQ 11Y 07K		REGISTRATION MEMORY 8		01
*	SW027	V8889300	Push Switch	EVQ 11Y 07K		REGISTRATION MEMORY D.		01
*		V7553100	Circuit Board	DM		(XZ592G0)		
*		V7553100	Circuit Board	DM		(XZ592H0)		
	C0001	US064100	Ceramic Capacitor-B (chip)	0.0100 50V K				01
	C0002	US062470	Ceramic Capacitor-SL(chip)	470P 50V J				01
	C0003	US064100	Ceramic Capacitor-B (chip)	0.0100 50V K				01
	C0004	US062470	Ceramic Capacitor-SL(chip)	470P 50V J				01
	C0005	US064100	Ceramic Capacitor-B (chip)	0.0100 50V K				01
	C0006	US062470	Ceramic Capacitor-SL(chip)	470P 50V J				01
	C0007	US064100	Ceramic Capacitor-B (chip)	0.0100 50V K				01
	C0008	US062470	Ceramic Capacitor-SL(chip)	470P 50V J				01
	C0009	US064100	Ceramic Capacitor-B (chip)	0.0100 50V K				01
	C0010	US062470	Ceramic Capacitor-SL(chip)	470P 50V J				01
	C0011	US064100	Ceramic Capacitor-B (chip)	0.0100 50V K				01
	C0012	US062470	Ceramic Capacitor-SL(chip)	470P 50V J				01
	C0013	US064100	Ceramic Capacitor-B (chip)	0.0100 50V K				01
	C0014	US062470	Ceramic Capacitor-SL(chip)	470P 50V J				01
	C0015	US064100	Ceramic Capacitor-B (chip)	0.0100 50V K				01
	C0016	US062470	Ceramic Capacitor-SL(chip)	470P 50V J				01
	C0017	US064100	Ceramic Capacitor-B (chip)	0.0100 50V K				01
	C0018	US062470	Ceramic Capacitor-SL(chip)	470P 50V J				01
	C0019	US064100	Ceramic Capacitor-B (chip)	0.0100 50V K				01

*: New Parts

RANK: Japan only

REF NO.	PART NO.	DESCRIPTION			REMARKS	QTY	RANK
C0020	US062470	Ceramic Capacitor-SL(chip)	470P 50V J				01
C0021	US064100	Ceramic Capacitor-B (chip)	0.0100 50V K				01
C0022	US062470	Ceramic Capacitor-SL(chip)	470P 50V J				01
C0023	US064100	Ceramic Capacitor-B (chip)	0.0100 50V K				01
C0024	US062470	Ceramic Capacitor-SL(chip)	470P 50V J				01
C0025	US064100	Ceramic Capacitor-B (chip)	0.0100 50V K				01
C0026	US062470	Ceramic Capacitor-SL(chip)	470P 50V J				01
C0027	US064100	Ceramic Capacitor-B (chip)	0.0100 50V K				01
C0028	US062470	Ceramic Capacitor-SL(chip)	470P 50V J				01
C0029	UF018100	Electrolytic Cap. (chip)	100 6.3V				01
C0030	UF018100	Electrolytic Cap. (chip)	100 6.3V				01
C0031	US135100	Ceramic Capacitor-F (chip)	0.1000 16V Z				01
C0037	US135100	Ceramic Capacitor-F (chip)	0.1000 16V Z				01
C0039	US135100	Ceramic Capacitor-F (chip)	0.1000 16V Z				01
C0040	US135100	Ceramic Capacitor-F (chip)	0.1000 16V Z				01
C0042	UF118220	Electrolytic Cap. (chip)	220 6.3V UUR0J2				01
C0043	US135100	Ceramic Capacitor-F (chip)	0.1000 16V Z				01
C0044	UF118220	Electrolytic Cap. (chip)	220 6.3V UUR0J2				01
C0045	UF138220	Electrolytic Cap. (chip)	220 16V UUR1C2				01
C0046	UF138220	Electrolytic Cap. (chip)	220 16V UUR1C2				01
C0047	US135100	Ceramic Capacitor-F (chip)	0.1000 16V Z				01
-0051	US135100	Ceramic Capacitor-F (chip)	0.1000 16V Z				01
C0055	UF138220	Electrolytic Cap. (chip)	220 16V UUR1C2				01
C0056	UF138220	Electrolytic Cap. (chip)	220 16V UUR1C2				01
C0057	US135100	Ceramic Capacitor-F (chip)	0.1000 16V Z				01
C0061	US135100	Ceramic Capacitor-F (chip)	0.1000 16V Z				01
C0063	US135100	Ceramic Capacitor-F (chip)	0.1000 16V Z				01
C0065	US135100	Ceramic Capacitor-F (chip)	0.1000 16V Z				01
C0068	US135100	Ceramic Capacitor-F (chip)	0.1000 16V Z				01
C0069	UF037100	Electrolytic Cap. (chip)	10 16V				01
C0070	US064100	Ceramic Capacitor-B (chip)	0.0100 50V K				01
C0071	US062470	Ceramic Capacitor-SL(chip)	470P 50V J				01
C0072	US064100	Ceramic Capacitor-B (chip)	0.0100 50V K				01
C0073	US062470	Ceramic Capacitor-SL(chip)	470P 50V J				01
C0074	US064100	Ceramic Capacitor-B (chip)	0.0100 50V K				01
C0075	US062470	Ceramic Capacitor-SL(chip)	470P 50V J				01
C0076	US064100	Ceramic Capacitor-B (chip)	0.0100 50V K				01
C0077	US062470	Ceramic Capacitor-SL(chip)	470P 50V J				01
C0078	US135100	Ceramic Capacitor-F (chip)	0.1000 16V Z				01
C0079	US135100	Ceramic Capacitor-F (chip)	0.1000 16V Z				01
C0082	US135100	Ceramic Capacitor-F (chip)	0.1000 16V Z				01
C0088	US135100	Ceramic Capacitor-F (chip)	0.1000 16V Z				01
C0089	US064100	Ceramic Capacitor-B (chip)	0.0100 50V K				01
C0090	US062470	Ceramic Capacitor-SL(chip)	470P 50V J				01
C0091	US064100	Ceramic Capacitor-B (chip)	0.0100 50V K				01
C0092	US062470	Ceramic Capacitor-SL(chip)	470P 50V J				01
C0093	US064100	Ceramic Capacitor-B (chip)	0.0100 50V K				01
C0094	US062470	Ceramic Capacitor-SL(chip)	470P 50V J				01
C0095	US135100	Ceramic Capacitor-F (chip)	0.1000 16V Z				01
C0098	US060600	Ceramic Capacitor-CH(chip)	6P 50V D				
C0099	US060500	Ceramic Capacitor-CH(chip)	5P 50V C				01
C0100	UF018100	Electrolytic Cap. (chip)	100 6.3V				01
C0103	US135100	Ceramic Capacitor-F (chip)	0.1000 16V Z				01
-0105	US135100	Ceramic Capacitor-F (chip)	0.1000 16V Z				01
C0106	US061330	Ceramic Capacitor-CH(chip)	33P 50V J				01
C0107	US061330	Ceramic Capacitor-CH(chip)	33P 50V J				01
C0109	US135100	Ceramic Capacitor-F (chip)	0.1000 16V Z				01
C0111	US062470	Ceramic Capacitor-SL(chip)	470P 50V J				01
C0112	US064100	Ceramic Capacitor-B (chip)	0.0100 50V K				01
C0113	US062470	Ceramic Capacitor-SL(chip)	470P 50V J				01
C0114	US064100	Ceramic Capacitor-B (chip)	0.0100 50V K				01
C0115	US062470	Ceramic Capacitor-SL(chip)	470P 50V J				01
C0116	US064100	Ceramic Capacitor-B (chip)	0.0100 50V K				01
C0117	US062470	Ceramic Capacitor-SL(chip)	470P 50V J				01
C0118	US064100	Ceramic Capacitor-B (chip)	0.0100 50V K				01
C0119	UF037100	Electrolytic Cap. (chip)	10 16V				01
C0120	UF008100	Electrolytic Cap. (chip)	100 4V		Version H		01
C0120	UF007470	Electrolytic Cap. (chip)	47 4V		Version G		01
C0121	US062470	Ceramic Capacitor-SL(chip)	470P 50V J				01
C0122	US064100	Ceramic Capacitor-B (chip)	0.0100 50V K				01

∗: New Parts

RANK: Japan only

REF NO.	PART NO.	DESCRIPTION			REMARKS	QTY	RANK
C0123	RD350000	Carbon Resistor (chip)	0 63M J				01
C0124	RD350000	Carbon Resistor (chip)	0 63M J				01
C0125	US062470	Ceramic Capacitor-SL(chip)	470P 50V J				01
C0126	RD350000	Carbon Resistor (chip)	0 63M J				01
C0127	US064100	Ceramic Capacitor-B (chip)	0.0100 50V K				01
C0128	RD350000	Carbon Resistor (chip)	0 63M J				01
-0131	RD350000	Carbon Resistor (chip)	0 63M J				01
C0132	US062470	Ceramic Capacitor-SL(chip)	470P 50V J				01
C0133	US064100	Ceramic Capacitor-B (chip)	0.0100 50V K				01
C0134	US062470	Ceramic Capacitor-SL(chip)	470P 50V J				01
C0135	US062470	Ceramic Capacitor-SL(chip)	470P 50V J				01
C0136	US064100	Ceramic Capacitor-B (chip)	0.0100 50V K				01
C0137	US064100	Ceramic Capacitor-B (chip)	0.0100 50V K				01
C0138	US062470	Ceramic Capacitor-SL(chip)	470P 50V J				01
C0139	US064100	Ceramic Capacitor-B (chip)	0.0100 50V K				01
C0140	US062470	Ceramic Capacitor-SL(chip)	470P 50V J				01
C0141	US064100	Ceramic Capacitor-B (chip)	0.0100 50V K				01
C0142	US064100	Ceramic Capacitor-B (chip)	0.0100 50V K				01
C0143	US062470	Ceramic Capacitor-SL(chip)	470P 50V J				01
C0144	UF037100	Electrolytic Cap. (chip)	10 16V				01
C0145	US062470	Ceramic Capacitor-SL(chip)	470P 50V J				01
C0146	US062470	Ceramic Capacitor-SL(chip)	470P 50V J				01
C0147	US064100	Ceramic Capacitor-B (chip)	0.0100 50V K				01
C0148	US062470	Ceramic Capacitor-SL(chip)	470P 50V J				01
C0149	US062470	Ceramic Capacitor-SL(chip)	470P 50V J				01
C0150	US064100	Ceramic Capacitor-B (chip)	0.0100 50V K				01
C0151	UF008100	Electrolytic Cap. (chip)	100 4V		} Version H		01
C0151	UF007470	Electrolytic Cap. (chip)	47 4V		} Version G		01
C0152	US064100	Ceramic Capacitor-B (chip)	0.0100 50V K				01
C0153	US061100	Ceramic Capacitor-CH(chip)	10P 50V J				01
C0154	US060500	Ceramic Capacitor-CH(chip)	5P 50V J				01
C0155	US063100	Ceramic Capacitor-B (chip)	1000P 50V K				01
C0157	US064100	Ceramic Capacitor-B (chip)	0.0100 50V K				01
C0158	US064100	Ceramic Capacitor-B (chip)	0.0100 50V K				01
C0161	US064100	Ceramic Capacitor-B (chip)	0.0100 50V K				01
C0162	UF046470	Electrolytic Cap. (chip)	4.7 25V				01
C0163	UF037100	Electrolytic Cap. (chip)	10 16V				01
C0164	UF037100	Electrolytic Cap. (chip)	10 16V				01
C0165	UF118220	Electrolytic Cap. (chip)	220 6.3V UUR0J2				01
C0168	US064100	Ceramic Capacitor-B (chip)	0.0100 50V K				01
C0169	US062470	Ceramic Capacitor-SL(chip)	470P 50V J				01
C0170	US064100	Ceramic Capacitor-B (chip)	0.0100 50V K				01
C0171	US062470	Ceramic Capacitor-SL(chip)	470P 50V J				01
C0172	US062470	Ceramic Capacitor-SL(chip)	470P 50V J				01
C0173	US064100	Ceramic Capacitor-B (chip)	0.0100 50V K				01
C0174	UF037100	Electrolytic Cap. (chip)	10 16V				01
C0175	US064100	Ceramic Capacitor-B (chip)	0.0100 50V K				01
C0176	US062470	Ceramic Capacitor-SL(chip)	470P 50V J				01
C0177	US064100	Ceramic Capacitor-B (chip)	0.0100 50V K				01
C0178	US062470	Ceramic Capacitor-SL(chip)	470P 50V J				01
C0179	US062470	Ceramic Capacitor-SL(chip)	470P 50V J				01
C0180	US064100	Ceramic Capacitor-B (chip)	0.0100 50V K				01
C0181	UF037100	Electrolytic Cap. (chip)	10 16V				01
C0187	US064100	Ceramic Capacitor-B (chip)	0.0100 50V K				01
C0188	US062470	Ceramic Capacitor-SL(chip)	470P 50V J				01
C0189	US064100	Ceramic Capacitor-B (chip)	0.0100 50V K				01
C0190	US062470	Ceramic Capacitor-SL(chip)	470P 50V J				01
C0191	US064100	Ceramic Capacitor-B (chip)	0.0100 50V K				01
C0192	US062470	Ceramic Capacitor-SL(chip)	470P 50V J				01
C0193	US064100	Ceramic Capacitor-B (chip)	0.0100 50V K				01
C0194	US062470	Ceramic Capacitor-SL(chip)	470P 50V J				01
C0197	UF037100	Electrolytic Cap. (chip)	10 16V				01
C0198	US135100	Ceramic Capacitor-F (chip)	0.1000 16V Z				01
C0206	UF037100	Electrolytic Cap. (chip)	10 16V				01
C0207	UF037100	Electrolytic Cap. (chip)	10 16V				01
C0208	US135100	Ceramic Capacitor-F (chip)	0.1000 16V Z				01
-0210	US135100	Ceramic Capacitor-F (chip)	0.1000 16V Z				01
C0213	UF037100	Electrolytic Cap. (chip)	10 16V				01
C0214	US135100	Ceramic Capacitor-F (chip)	0.1000 16V Z				01
C0215	US135100	Ceramic Capacitor-F (chip)	0.1000 16V Z				01

∗: New Parts

RANK: Japan only

REF NO.	PART NO.	DESCRIPTION			REMARKS	QTY	RANK
C0216	UF037100	Electrolytic Cap. (chip)	10 16V				01
C0217	US135100	Ceramic Capacitor-F (chip)	0.1000 16V Z				01
C0219	UF037100	Electrolytic Cap. (chip)	10 16V				01
C0226	UF018100	Electrolytic Cap. (chip)	100 6.3V				01
C0227	US064100	Ceramic Capacitor-B (chip)	0.0100 50V K				01
-0229	US064100	Ceramic Capacitor-B (chip)	0.0100 50V K				01
C0241	US135100	Ceramic Capacitor-F (chip)	0.1000 16V Z				01
-0243	US135100	Ceramic Capacitor-F (chip)	0.1000 16V Z				01
C0244	UF018100	Electrolytic Cap. (chip)	100 6.3V				01
* C0245	UF008220	Electrolytic Cap. (chip)	220 4V				
C0246	US064100	Ceramic Capacitor-B (chip)	0.0100 50V K				01
C0247	UF046470	Electrolytic Cap. (chip)	4.7 25V				01
-0249	UF046470	Electrolytic Cap. (chip)	4.7 25V				01
C0254	UF046470	Electrolytic Cap. (chip)	4.7 25V				01
C0256	US062820	Ceramic Capacitor-B (chip)	820P 50V K				01
C0257	US062820	Ceramic Capacitor-B (chip)	820P 50V K				01
C0258	UF046470	Electrolytic Cap. (chip)	4.7 25V				01
C0263	US062180	Ceramic Capacitor-SL(chip)	180P 50V J				01
C0264	US062180	Ceramic Capacitor-SL(chip)	180P 50V J				01
C0272	US062180	Ceramic Capacitor-SL(chip)	180P 50V J				01
C0273	US062180	Ceramic Capacitor-SL(chip)	180P 50V J				01
C0277	UF038100	Electrolytic Cap. (chip)	100 16V				01
C0283	UF046470	Electrolytic Cap. (chip)	4.7 25V				01
C0291	UF046470	Electrolytic Cap. (chip)	4.7 25V				01
C0300	US063820	Ceramic Capacitor-B (chip)	8200P 50V K				01
C0301	US063820	Ceramic Capacitor-B (chip)	8200P 50V K				01
C0304	US135100	Ceramic Capacitor-F (chip)	0.1000 16V Z				01
C0305	US062100	Ceramic Capacitor-SL(chip)	100P 50V J				01
C0306	US062100	Ceramic Capacitor-SL(chip)	100P 50V J				01
CN001	VB390500	Connector Base Post	PH 9P TE				03
CN002	VB390400	Connector Base Post	PH 8P TE				01
CN003	VB390400	Connector Base Post	PH 8P TE				01
CN004	VB390300	Connector Base Post	PH 7P TE				01
CN008	LB932020	Base Post Connector	VH 2P TE				01
CN009	LB918020	Base Post Connector	XH 2P TE				01
CN010	LB918030	Base Post Connector	XH 3P TE				01
CN011	VH343800	Connector Header	HIF3FC-34PA2.54DSA				03
CN021	VB390000	Connector Base Post	PH 4P TE				01
CN022	VB390200	Connector Base Post	PH 6P TE				01
CN023	VB390100	Connector Base Post	PH 5P TE				01
D0001	VV925900	Diode	RLS-73 TE-11				01
D0002	VS201100	Diode	D1F60				01
-0005	VS201100	Diode	D1F60				01
D0006	VV925900	Diode	RLS-73 TE-11				01
EM001	VD542700	LC Filter	DSS306-93F223Z1				01
-008	VD542700	LC Filter	DSS306-93F223Z1				01
IC001	XI939A00	IC	HD63266F		FDC		09
IC003	XY781A00	IC	HY57V653220BCT-10		SDRAM 64M		15
IC003	X0176A00	IC	W986432DH-7				15
IC003	X0494A00	IC	K4S643232E-TC70000				15
IC003	X0493A00	IC	K4S643232E-TC60000				
IC004	XP642A00	IC	HD74LS09FPEL		AND		01
IC005	XW148A00	IC	HD74LVC245ATELL		TRANSCEIVER		02
IC005	XZ286A00	IC	74LVC245APW				02
IC006	XV890A00	IC	TC74VHC14FT		INVERTER		02
IC009	XT744A00	IC	TC74VHCT245AFT		TRANSCEIVER		07
IC010	XT744A00	IC	TC74VHCT245AFT		TRANSCEIVER		07
IC011	XW148A00	IC	HD74LVC245ATELL		TRANSCEIVER		02
IC011	XZ286A00	IC	74LVC245APW				02
* IC012	X0060A00	IC	T8F02TB-0102		SWP50		15
* IC014	X2081A00	IC	HD6417709SF133		CPU (SH3)		12
* IC015	X0503100	IC	K3N9V128NA-YC12T00		MASK ROM 128M WAVE-L		
* IC016	X0504100	IC	K3N9V129NA-YC12T00		MASK ROM 128M WAVE-H		
IC017	XF291A00	IC	UPC4570G2		OP AMP		03
IC018	XF291A00	IC	UPC4570G2		OP AMP		03
IC022	XZ414B00	IC	W986416DH-7		DRAM 64M		
IC022	X0303A00	IC	HY57V641620HGT-HQ				15
IC022	X2760A00	IC	K4S641632F-TC75				
IC023	XZ414B00	IC	W986416DH-7		DRAM 64M		
IC023	X0303A00	IC	HY57V641620HGT-HQ				15

*: New Parts

RANK: Japan only

	REF NO.	PART NO.	DESCRIPTION			REMARKS	QTY	RANK
	IC023	X2760A00	IC	K4S641632F-TC75				
	IC027	XW029A00	IC	AK4393-VF-E2		DAC		07
*	IC030	X0505100	IC	K3N6V132EE-YC10T		MASK ROM 32M PROGRAM		
	IC032	X0150A00	IC	NJU7202U50		REGULATOR +5V		03
	IC032	XV492A00	IC	UPC2905T-E1				03
	IC032	XW674A00	IC	NJM7805DL1A (TE1)				02
*	IC036	X0609A00	IC	LMS8117AMP-ADJ		REGULATOR		
*	IC038	X0609A00	IC	LMS8117AMP-ADJ		REGULATOR		
	IC039	XZ642A00	IC	TAR5S33 3.3V		REGULATOR +3.3V		01
	L0005	VR579900	Chip Inductance	BK2125HS601-T				01
	-0009	VR579900	Chip Inductance	BK2125HS601-T				01
	L0012	VR579900	Chip Inductance	BK2125HS601-T				01
	-0027	VR579900	Chip Inductance	BK2125HS601-T				01
	L0033	VR579900	Chip Inductance	BK2125HS601-T				01
	-0035	VR579900	Chip Inductance	BK2125HS601-T				01
	L0042	VR579900	Chip Inductance	BK2125HS601-T				01
*	R0001	RD354180	Carbon Resistor (chip)	18 63M J				01
*	R0002	RD354180	Carbon Resistor (chip)	18 63M J				01
	R0003	RD350000	Carbon Resistor (chip)	0 63M J				01
	R0004	RD350000	Carbon Resistor (chip)	0 63M J				01
*	R0005	RD354180	Carbon Resistor (chip)	18 63M J				01
*	-0007	RD354180	Carbon Resistor (chip)	18 63M J				01
	R0008	RD357100	Carbon Resistor (chip)	10K 63M J				01
	R0009	RD356100	Carbon Resistor (chip)	1.0K 63M J				01
	R0010	RD356100	Carbon Resistor (chip)	1.0K 63M J				01
*	R0014	RD354270	Carbon Resistor (chip)	27 63M J				01
*	-0017	RD354270	Carbon Resistor (chip)	27 63M J				01
	R0024	RD355470	Carbon Resistor (chip)	470 63M J				01
	-0028	RD355470	Carbon Resistor (chip)	470 63M J				01
	R0029	RD356220	Carbon Resistor (chip)	2.2K 63M J				01
	R0030	RD357100	Carbon Resistor (chip)	10K 63M J				01
	R0033	RD355470	Carbon Resistor (chip)	470 63M J				01
	-0038	RD355470	Carbon Resistor (chip)	470 63M J				01
	R0042	V2747000	Chip Inductance	BLM18PG600SN1				
	R0045	RD350000	Carbon Resistor (chip)	0 63M J				01
	R0048	RD350000	Carbon Resistor (chip)	0 63M J				01
	R0050	RD359100	Carbon Resistor (chip)	1.0M 63M J				01
	R0051	RD354680	Carbon Resistor (chip)	68 63M J				01
	R0055	RD355560	Carbon Resistor (chip)	560 63M J				01
	R0056	RD354680	Carbon Resistor (chip)	68 63M J				01
	R0057	RD350000	Carbon Resistor (chip)	0 63M J				01
	-0064	RD350000	Carbon Resistor (chip)	0 63M J				01
	R0065	RD357100	Carbon Resistor (chip)	10K 63M J				01
	R0067	RD357100	Carbon Resistor (chip)	10K 63M J				01
	R0069	RD354680	Carbon Resistor (chip)	68 63M J				01
	R0070	RD350000	Carbon Resistor (chip)	0 63M J				01
	R0071	RD354680	Carbon Resistor (chip)	68 63M J				01
	R0072	RD354680	Carbon Resistor (chip)	68 63M J				01
	R0073	RD357100	Carbon Resistor (chip)	10K 63M J				01
	R0074	RD357100	Carbon Resistor (chip)	10K 63M J				01
	R0075	RD354680	Carbon Resistor (chip)	68 63M J				01
	R0083	RD354680	Carbon Resistor (chip)	68 63M J				01
	R0095	RD358470	Carbon Resistor (chip)	470K 63M J				01
	R0103	RD357100	Carbon Resistor (chip)	10K 63M J				01
	-0105	RD357100	Carbon Resistor (chip)	10K 63M J				01
	R0106	RD350000	Carbon Resistor (chip)	0 63M J				01
	-0108	RD350000	Carbon Resistor (chip)	0 63M J				01
	R0113	RD350000	Carbon Resistor (chip)	0 63M J				01
	-0115	RD350000	Carbon Resistor (chip)	0 63M J				01
	R0121	RD354680	Carbon Resistor (chip)	68 63M J				01
	R0123	RD357100	Carbon Resistor (chip)	10K 63M J				01
	R0124	RD357100	Carbon Resistor (chip)	10K 63M J				01
	R0126	RD350000	Carbon Resistor (chip)	0 63M J				01
	R0127	RD357100	Carbon Resistor (chip)	10K 63M J				01
	R0128	RD357100	Carbon Resistor (chip)	10K 63M J				01
	R0129	RD354680	Carbon Resistor (chip)	68 63M J				01
	R0130	RD357100	Carbon Resistor (chip)	10K 63M J				01
	R0131	RD354680	Carbon Resistor (chip)	68 63M J				01
	R0132	RD354680	Carbon Resistor (chip)	68 63M J				01
	R0133	RD357100	Carbon Resistor (chip)	10K 63M J				01

*: New Parts

RANK: Japan only

REF NO.	PART NO.	DESCRIPTION			REMARKS	QTY	RANK
R0134	RD357100	Carbon Resistor (chip)	10K 63M J				01
R0135	RD35000	Carbon Resistor (chip)	0 63M J				01
R0136	RD354680	Carbon Resistor (chip)	68 63M J				01
R0137	RD357100	Carbon Resistor (chip)	10K 63M J				01
R0138	RD357100	Carbon Resistor (chip)	10K 63M J				01
R0139	RD354680	Carbon Resistor (chip)	68 63M J				01
R0140	RD357100	Carbon Resistor (chip)	10K 63M J				01
R0141	RD354680	Carbon Resistor (chip)	68 63M J				01
R0142	RD354680	Carbon Resistor (chip)	68 63M J				01
R0143	RD357100	Carbon Resistor (chip)	10K 63M J				01
R0144	RD357100	Carbon Resistor (chip)	10K 63M J				01
R0146	RD354680	Carbon Resistor (chip)	68 63M J				01
R0148	RD357100	Carbon Resistor (chip)	10K 63M J				01
R0149	RD354680	Carbon Resistor (chip)	68 63M J				01
R0150	RD354680	Carbon Resistor (chip)	68 63M J				01
R0151	RD357100	Carbon Resistor (chip)	10K 63M J				01
R0152	RD357100	Carbon Resistor (chip)	10K 63M J				01
R0153	RD354680	Carbon Resistor (chip)	68 63M J				01
R0156	RD357100	Carbon Resistor (chip)	10K 63M J				01
R0157	RD354560	Carbon Resistor (chip)	56 63M J				01
R0158	RD354680	Carbon Resistor (chip)	68 63M J				01
R0159	RD357100	Carbon Resistor (chip)	10K 63M J				01
R0162	RD357100	Carbon Resistor (chip)	10K 63M J				01
R0163	RD354680	Carbon Resistor (chip)	68 63M J				01
R0164	RD357100	Carbon Resistor (chip)	10K 63M J				01
R0165	RD354680	Carbon Resistor (chip)	68 63M J				01
R0166	RD354680	Carbon Resistor (chip)	68 63M J				01
R0167	RD357100	Carbon Resistor (chip)	10K 63M J				01
R0168	RD354680	Carbon Resistor (chip)	68 63M J				01
R0169	RD357100	Carbon Resistor (chip)	10K 63M J				01
R0170	RD354680	Carbon Resistor (chip)	68 63M J				01
R0171	RD357100	Carbon Resistor (chip)	10K 63M J				01
R0173	RD357100	Carbon Resistor (chip)	10K 63M J				01
-0176	RD355100	Carbon Resistor (chip)	100 63M J				01
R0177	RD355220	Carbon Resistor (chip)	220 63M J				01
R0178	RD357100	Carbon Resistor (chip)	10K 63M J				01
R0180	RD358470	Carbon Resistor (chip)	470K 63M J				01
R0181	RD355330	Carbon Resistor (chip)	330 63M J				01
R0182	RD357100	Carbon Resistor (chip)	10K 63M J				01
R0185	RD356100	Carbon Resistor (chip)	1.0K 63M J				01
R0189	RD354680	Carbon Resistor (chip)	68 63M J				01
-0192	RD354680	Carbon Resistor (chip)	68 63M J				01
R0193	RD355330	Carbon Resistor (chip)	330 63M J				01
R0195	RD357220	Carbon Resistor (chip)	22K 63M J				01
R0196	RD358120	Carbon Resistor (chip)	120K 63M J				01
R0197	RD355100	Carbon Resistor (chip)	100 63M J				01
R0198	RD355100	Carbon Resistor (chip)	100 63M J				01
R0199	RD356100	Carbon Resistor (chip)	1.0K 63M J				01
R0200	RD359100	Carbon Resistor (chip)	1.0M 63M J				01
R0201	RD357100	Carbon Resistor (chip)	10K 63M J				01
-0211	RD357100	Carbon Resistor (chip)	10K 63M J				01
R0216	RD350000	Carbon Resistor (chip)	0 63M J				01
R0217	RD350000	Carbon Resistor (chip)	0 63M J				01
R0223	RD357100	Carbon Resistor (chip)	10K 63M J				01
R0224	RD350000	Carbon Resistor (chip)	0 63M J				01
R0234	RD356820	Carbon Resistor (chip)	8.2K 63M J				01
R0235	RD355220	Carbon Resistor (chip)	220 63M J				01
R0236	RD356120	Carbon Resistor (chip)	1.2K 63M J				01
R0237	RD356560	Carbon Resistor (chip)	5.6K 63M J				01
R0238	RD356100	Carbon Resistor (chip)	1.0K 63M J				01
R0239	RD356220	Carbon Resistor (chip)	2.2K 63M J				01
R0255	RD356470	Carbon Resistor (chip)	4.7K 63M J				01
-0258	RD356470	Carbon Resistor (chip)	4.7K 63M J				01
R0263	RD357100	Carbon Resistor (chip)	10K 63M J				01
R0264	RD350000	Carbon Resistor (chip)	0 63M J				01
R0265	RD357100	Carbon Resistor (chip)	10K 63M J				01
R0266	RD350000	Carbon Resistor (chip)	0 63M J				01
R0267	RD357100	Carbon Resistor (chip)	10K 63M J				01
R0268	RD356470	Carbon Resistor (chip)	4.7K 63M J				01
R0269	RD356470	Carbon Resistor (chip)	4.7K 63M J				01

⋆: New Parts

RANK: Japan only

REF NO.	PART NO.	DESCRIPTION			REMARKS	QTY	RANK
R0270	RD357100	Carbon Resistor (chip)	10K 63M J				01
R0271	RD356470	Carbon Resistor (chip)	4.7K 63M J				01
R0272	RD356470	Carbon Resistor (chip)	4.7K 63M J				01
R0289	RD355330	Carbon Resistor (chip)	330 63M J				01
R0290	RD355330	Carbon Resistor (chip)	330 63M J				01
R0300	RD354470	Carbon Resistor (chip)	47 63M J				01
R0301	RD354470	Carbon Resistor (chip)	47 63M J				01
R0307	RD358100	Carbon Resistor (chip)	100K 63M J				01
R0308	RD358100	Carbon Resistor (chip)	100K 63M J				01
R0311	RD356100	Carbon Resistor (chip)	1.0K 63M J				01
R0312	RD356100	Carbon Resistor (chip)	1.0K 63M J				01
R0324	RD356820	Carbon Resistor (chip)	8.2K 63M J				01
R0325	RD356820	Carbon Resistor (chip)	8.2K 63M J				01
R0327	RD356220	Carbon Resistor (chip)	2.2K 63M J				01
R0330	RD357100	Carbon Resistor (chip)	10K 63M J				01
-0332	RD357100	Carbon Resistor (chip)	10K 63M J				01
R0333	RD356100	Carbon Resistor (chip)	1.0K 63M J				01
R0334	RD354470	Carbon Resistor (chip)	47 63M J				01
R0335	RD354470	Carbon Resistor (chip)	47 63M J				01
R0336	RD356100	Carbon Resistor (chip)	1.0K 63M J				01
R0363	RD350000	Carbon Resistor (chip)	0 63M J				01
R0368	RD357100	Carbon Resistor (chip)	10K 63M J				01
R0369	RD357100	Carbon Resistor (chip)	10K 63M J				01
RA001	RE047100	Resistor Array	10KX4				01
RA001	VM506100	Resistor Array	EXB-V8V103JV				01
RA002	RE044680	Resistor Array	68X4				01
-004	RE044680	Resistor Array	68X4				01
RA002	VM506400	Resistor Array	EXB-V8V680JV				01
-004	VM506400	Resistor Array	EXB-V8V680JV				01
RA005	RE047100	Resistor Array	10KX4				01
RA005	VM506100	Resistor Array	EXB-V8V103JV				01
RA006	RE047100	Resistor Array	10KX4				01
RA006	VM506100	Resistor Array	EXB-V8V103JV				01
RA007	RE044680	Resistor Array	68X4				01
RA007	VM506400	Resistor Array	EXB-V8V680JV				01
RA008	RE044680	Resistor Array	68X4				01
RA008	VM506400	Resistor Array	EXB-V8V680JV				01
RA009	RE047100	Resistor Array	10KX4				01
RA009	VM506100	Resistor Array	EXB-V8V103JV				01
RA010	RE047100	Resistor Array	10KX4				01
RA010	VM506100	Resistor Array	EXB-V8V103JV				01
RA011	RE044680	Resistor Array	68X4				01
RA011	VM506400	Resistor Array	EXB-V8V680JV				01
RA012	RE047100	Resistor Array	10KX4				01
RA012	VM506100	Resistor Array	EXB-V8V103JV				01
RA013	RE044680	Resistor Array	68X4				01
-026	RE044680	Resistor Array	68X4				01
RA013	VM506400	Resistor Array	EXB-V8V680JV				01
-026	VM506400	Resistor Array	EXB-V8V680JV				01
RA027	RE047100	Resistor Array	10KX4				01
RA027	VM506100	Resistor Array	EXB-V8V103JV				01
RA028	RE044680	Resistor Array	68X4				01
RA028	VM506400	Resistor Array	EXB-V8V680JV				01
RA029	RE044680	Resistor Array	68X4				01
RA029	VM506400	Resistor Array	EXB-V8V680JV				01
RA030	VM506100	Resistor Array	10KX4				01
-032	VM506100	Resistor Array	10KX4				01
RY001	VB996300	Relay	DC G5A-237P 9V				05
SW001	V3026900	Jumper Switch	CHS-01 TA1				02
TR001	VV925400	Transistor	2SC2SC2712 GR				01
TR003	VV925400	Transistor	2SC2SC2712 GR				01
TR004	VJ927200	Transistor	2SA1162 O,Y				01
TR004	VQ395600	Transistor	2SA1052 B,C				01
TR008	VV925400	Transistor	2SC2SC2712 GR				01
TR009	VV925400	Transistor	2SC2SC2712 GR				01
X0002	VP864900	Quartz Crystal Unit	16MHz SMD-49				04
X0003	VP864800	Quartz Crystal Unit	11.2896MHz SMD-49				04
X0005	VP864900	Quartz Crystal Unit	16MHz SMD-49				04
*	V7712800	Circuit Board	DRV		(X0162C0)		

*: New Parts

RANK: Japan only

	REF NO.	PART NO.	DESCRIPTION			REMARKS	QTY	RANK
	C0001	UR828220	Electrolytic Cap.	220.00 10.0V				01
	C0002	US064100	Ceramic Capacitor-B (chip)	0.0100 50V K				01
	C0005	UR828220	Electrolytic Cap.	220.00 10.0V				01
	C0006	US064100	Ceramic Capacitor-B (chip)	0.0100 50V K				01
	C0007	UR837100	Electrolytic Cap.	10.00 16.0V				01
	C0008	US064100	Ceramic Capacitor-B (chip)	0.0100 50V K				01
	C0009	UR837100	Electrolytic Cap.	10.00 16.0V				01
	C0010	US064100	Ceramic Capacitor-B (chip)	0.0100 50V K				01
	C0011	UR837100	Electrolytic Cap.	10.00 16.0V				01
	C0012	US064100	Ceramic Capacitor-B (chip)	0.0100 50V K				01
	C0013	UR837100	Electrolytic Cap.	10.00 16.0V				01
	C0014	US064100	Ceramic Capacitor-B (chip)	0.0100 50V K				01
	C0015	UR837100	Electrolytic Cap.	10.00 16.0V				01
	C0016	US064100	Ceramic Capacitor-B (chip)	0.0100 50V K				01
	C0017	UR837100	Electrolytic Cap.	10.00 16.0V				01
	C0018	US064100	Ceramic Capacitor-B (chip)	0.0100 50V K				01
	C0019	UR837100	Electrolytic Cap.	10.00 16.0V				01
	C0020	UR828220	Electrolytic Cap.	220.00 10.0V				01
	C0021	US064100	Ceramic Capacitor-B (chip)	0.0100 50V K				01
	C0022	UR828220	Electrolytic Cap.	220.00 10.0V				01
	C0023	US064100	Ceramic Capacitor-B (chip)	0.0100 50V K				01
	C0028	US064100	Ceramic Capacitor-B (chip)	0.0100 50V K				01
	C0029	UR828220	Electrolytic Cap.	220.00 10.0V				01
	C0030	US064100	Ceramic Capacitor-B (chip)	0.0100 50V K				01
	C0031	UR828220	Electrolytic Cap.	220.00 10.0V				01
	C0036	US062470	Ceramic Capacitor-SL(chip)	470P 50V J				01
	-0057	US062470	Ceramic Capacitor-SL(chip)	470P 50V J				01
	C0058	US064100	Ceramic Capacitor-B (chip)	0.0100 50V K				01
	C0105	US063470	Ceramic Capacitor-SL(chip)	4700P 50V K				01
	C0106	US061680	Ceramic Capacitor-SL(chip)	68P 50V J				01
	C0107	US061680	Ceramic Capacitor-SL(chip)	68P 50V J				01
	C0108	US063470	Ceramic Capacitor-SL(chip)	4700P 50V K				01
	CN001	VB390300	Connector Base Post	PH 7P TE				01
	CN004	VB390000	Connector Base Post	PH 4P TE				01
	CN005	VB390500	Connector Base Post	PH 9P TE				03
	CN006	VB390600	Connector Base Post	PH 10P TE				01
	CN007	VF283100	Connector Base Post	PH 13P TE				01
	CN008	VF283400	Connector Base Post	PH 16P TE				01
	CN009	VB389900	Connector Base Post	PH 3P TE				01
	CN010	VE352600	Connector Base Post	PH 14P TE				01
	CN011	VE352600	Connector Base Post	PH 14P TE				01
	CN012	VB390000	Connector Base Post	PH 4P TE				01
	CN013	VB390100	Connector Base Post	PH 5P TE				01
	CN014	VF283100	Connector Base Post	PH 13P TE				01
	D0001	VV925900	Diode	RLS-73 TE-11				01
	-0015	VV925900	Diode	RLS-73 TE-11				01
	IC001	XZ916100	IC	UPD780031AYGK-N01		LED DRIVER/SWITCH SCAN.		05
	IC002	XZ916100	IC	UPD780031AYGK-N01		LED DRIVER/SWITCH SCAN.		05
*	IC003	V8074800	FET	MCH6616-TL				02
*	-012	V8074800	FET	MCH6616-TL				02
	L0001	VN381200	Coil	SNT-D20TF 10uH				03
	L0003	VN381200	Coil	SNT-D20TF 10uH				03
	R0001	RD356100	Carbon Resistor (chip)	1.0K 63M J				01
	R0002	RD354470	Carbon Resistor (chip)	47 63M J				01
	R0003	RD354470	Carbon Resistor (chip)	47 63M J				01
	R0005	RD357100	Carbon Resistor (chip)	10K 63M J				01
	R0007	RD357100	Carbon Resistor (chip)	10K 63M J				01
	R0008	RD355100	Carbon Resistor (chip)	100 63M J				01
	R0009	RD354220	Carbon Resistor (chip)	22 63M J				01
	-0034	RD354220	Carbon Resistor (chip)	22 63M J				01
	R0035	RD357100	Carbon Resistor (chip)	10K 63M J				01
	-0066	RD357100	Carbon Resistor (chip)	10K 63M J				01
	R0067	RD354470	Carbon Resistor (chip)	47 63M J				01
	R0068	RD357100	Carbon Resistor (chip)	10K 63M J				01
	R0069	RD354470	Carbon Resistor (chip)	47 63M J				01
	R0070	RD357100	Carbon Resistor (chip)	10K 63M J				01
	R0071	RD354470	Carbon Resistor (chip)	47 63M J				01
	R0072	RD357100	Carbon Resistor (chip)	10K 63M J				01
	R0073	RD354470	Carbon Resistor (chip)	47 63M J				01
	R0074	RD357100	Carbon Resistor (chip)	10K 63M J				01

*: New Parts

RANK: Japan only

REF NO.	PART NO.	DESCRIPTION			REMARKS	QTY	RANK
R0075	RD354470	Carbon Resistor (chip)	47 63M J				01
R0076	RD357100	Carbon Resistor (chip)	10K 63M J				01
R0077	RD354470	Carbon Resistor (chip)	47 63M J				01
R0078	RD357100	Carbon Resistor (chip)	10K 63M J				01
R0079	RD354470	Carbon Resistor (chip)	47 63M J				01
R0080	RD357100	Carbon Resistor (chip)	10K 63M J				01
R0081	RD354470	Carbon Resistor (chip)	47 63M J				01
R0082	RD357100	Carbon Resistor (chip)	10K 63M J				01
R0083	RD354470	Carbon Resistor (chip)	47 63M J				01
R0084	RD357100	Carbon Resistor (chip)	10K 63M J				01
R0085	RD354470	Carbon Resistor (chip)	47 63M J				01
R0086	RD357100	Carbon Resistor (chip)	10K 63M J				01
R0087	RD354470	Carbon Resistor (chip)	47 63M J				01
R0088	RD357100	Carbon Resistor (chip)	10K 63M J				01
R0089	RD354470	Carbon Resistor (chip)	47 63M J				01
R0090	RD357100	Carbon Resistor (chip)	10K 63M J				01
R0091	RD354470	Carbon Resistor (chip)	47 63M J				01
R0092	RD357100	Carbon Resistor (chip)	10K 63M J				01
R0093	RD354470	Carbon Resistor (chip)	47 63M J				01
R0094	RD357100	Carbon Resistor (chip)	10K 63M J				01
R0095	RD354470	Carbon Resistor (chip)	47 63M J				01
R0096	RD357100	Carbon Resistor (chip)	10K 63M J				01
R0097	RD354470	Carbon Resistor (chip)	47 63M J				01
R0098	RD357100	Carbon Resistor (chip)	10K 63M J				01
R0099	RD354470	Carbon Resistor (chip)	47 63M J				01
R0100	RD357100	Carbon Resistor (chip)	10K 63M J				01
R0101	RD354470	Carbon Resistor (chip)	47 63M J				01
R0102	RD357100	Carbon Resistor (chip)	10K 63M J				01
R0103	RD354470	Carbon Resistor (chip)	47 63M J				01
R0104	RD357100	Carbon Resistor (chip)	10K 63M J				01
R0105	RD354470	Carbon Resistor (chip)	47 63M J				01
R0106	RD357100	Carbon Resistor (chip)	10K 63M J				01
R0107	RD350000	Carbon Resistor (chip)	0 63M J				01
-0109	RD350000	Carbon Resistor (chip)	0 63M J				01
TAL01	VQ202400	Transistor Array	TD62785F		SOURCE		04
-04	VQ202400	Transistor Array	TD62785F				04
TAL01	VT943400	Transistor Array	TD62785F(TP1)				04
-04	VT943400	Transistor Array	TD62785F(TP1)				04
TAL01	V8566600	Transistor Array	TD62785F(EL)				
-04	V8566600	Transistor Array	TD62785F(EL)				
X0001	V6150500	Ceramic Resonator	8.38MHz EFOS8384E5				01
X0002	V6150500	Ceramic Resonator	8.38MHz EFOS8384E5				01
*	V7662900	Circuit Board	EMKS49A (UK)		(X0092C0)		
	- -	Vibration-proof Tape	10X64X0.5		(VK34680)		
	- -	Jumper Wire	0.55		(VA07890)		
C0001	VC694800	Semiconductive Cera. Cap.	0.1000 25V Z				01
C0002	UR828100	Electrolytic Cap.	100.00 10.0V				01
C0003	FG644100	Ceramic Capacitor-F	0.0100 50V Z				01
C0004	VC694800	Semiconductive Cera. Cap.	0.1000 25V Z				01
C0005	VC694800	Semiconductive Cera. Cap.	0.1000 25V Z				01
C0006	VP755200	Ceramic Capacitor Array	100P 50V K				02
CN001	VB390300	Connector Base Post	PH 7P TE				01
CN002	VK025600	Wire Trap	52147 12P TE				01
CN003	VK024900	Wire Trap	52147 5P TE				01
CN004	VF728300	Wire Trap	52147 6P TE				01
D0001	VB941200	Diode	1SS133,1SS176				01
-0003	VB941200	Diode	1SS133,1SS176				01
FG	- -	GND Wire			(VL43820)		
IC001	X0031100	IC	UPD780031AYGK-N02		LKS		05
R0001	HF756100	Carbon Resistor	1.0K 1/4 J				01
R0002	HF756100	Carbon Resistor	47.0 1/4 J				01
R0003	HF754470	Carbon Resistor	47.0 1/4 J				01
* RA001	V8090800	Resistor Array	RGLE12X103J				01
X0001	V6091100	Ceramic Resonator	8.38M EFOMC8384T4				01
*	V8622400	Circuit Board	EMKS49B (LK)		(X0092C0)		
	- -	Vibration-proof Tape	10X64X0.5		(VK34680)		
	- -	Jumper Wire	0.55		(VA07890)		
C0001	VC694800	Semiconductive Cera. Cap.	0.1000 25V Z				01

*: New Parts

RANK: Japan only

	REF NO.	PART NO.	DESCRIPTION			REMARKS	QTY	RANK
	C0002	UR828100	Electrolytic Cap.	100.00 10.0V				01
	C0003	FG644100	Ceramic Capacitor-F	0.0100 50V Z				01
	C0004	VC694800	Semiconductive Cera. Cap.	0.1000 25V Z				01
	C0005	VC694800	Semiconductive Cera. Cap.	0.1000 25V Z				01
	C0006	VP755200	Ceramic Capacitor Array	100P 50V K				02
	CN001	VB390300	Connector Base Post	PH 7P TE				01
	CN002	VK025600	Wire Trap	52147 12P TE				01
	CN003	VK024900	Wire Trap	52147 5P TE				01
	CN004	VF728300	Wire Trap	52147 6P TE				01
	D0001	VB941200	Diode	1SS133,1SS176				01
	-0003	VB941200	Diode	1SS133,1SS176				01
	FG	- -	GND Wire			(VL43820)		
	IC001	X0031100	IC	UPD780031AYGK-N02		LKS		05
	J1	- -	Jumper Wire	0.55		(VA07890)		
	R0001	HF756100	Carbon Resistor	1.0K 1/4 J				01
	R0002	HF754470	Carbon Resistor	47.0 1/4 J				01
	R0003	HF754470	Carbon Resistor	47.0 1/4 J				01
*	RA001	V8090800	Resistor Array	RGLE12X103J				01
	X0001	V6091100	Ceramic Resonator	8.38M EFOMC8384T4				01
*		V7733200	Circuit Board	EQ		(X0174B0)		
		- -	Jumper Wire	0.55		(VA07890)		
	C0001	UR838100	Electrolytic Cap.	100.00 16.0V				01
	C0002	UR838100	Electrolytic Cap.	100.00 16.0V				01
	C0003	UR837220	Electrolytic Cap.	22.00 16.0V				01
	C0004	VC694800	Semiconductive Cera. Cap.	0.1000 25V Z				01
	C0005	UR837220	Electrolytic Cap.	22.00 16.0V				01
	C0006	VC694800	Semiconductive Cera. Cap.	0.1000 25V Z				01
	C0007	UN867100	Electrolytic Cap.-BP	10.00 50.0V				01
	C0008	UA354680	Mylar Capacitor	0.0680 50V J				01
	C0009	VR169400	Monolithic Mylar Capacitor	ECQ-V1H684JL3				
	C0010	UA354330	Mylar Capacitor	0.0330 50V J				01
	C0011	VE326000	Monolithic Mylar Capacitor	0.10 50V J				01
	C0012	UA354270	Mylar Capacitor	0.0270 50V J				01
	C0013	UA354220	Mylar Capacitor	0.0220 50V J				
	C0014	UA353820	Mylar Capacitor	8200P 50V J				01
	C0015	UA353330	Mylar Capacitor	3300P 50V J				01
	C0016	UA353270	Mylar Capacitor	2700P 50V J				01
	C0017	UA353390	Mylar Capacitor	3900P 50V J				01
	C0018	FG612470	Ceramic Capacitor-B	470P 50V K				01
	C0019	UR866100	Electrolytic Cap.	1.00 50.0V				01
	C0020	UR837220	Electrolytic Cap.	22.00 16.0V				01
	C0021	VC694800	Semiconductive Cera. Cap.	0.1000 25V Z				01
	C0022	UR837220	Electrolytic Cap.	22.00 16.0V				01
	C0023	VC694800	Semiconductive Cera. Cap.	0.1000 25V Z				01
	C0024	UN867100	Electrolytic Cap.-BP	10.00 50.0V				01
	C0025	UA354680	Mylar Capacitor	0.0680 50V J				01
	C0026	VR169400	Monolithic Mylar Capacitor	ECQ-V1H684JL3				
	C0027	UA354330	Mylar Capacitor	0.0330 50V J				01
	C0028	VE326000	Monolithic Mylar Capacitor	0.10 50V J				01
	C0029	UA354270	Mylar Capacitor	0.0270 50V J				01
	C0030	UA354220	Mylar Capacitor	0.0220 50V J				
	C0031	UA353820	Mylar Capacitor	8200P 50V J				01
	C0032	UA353330	Mylar Capacitor	3300P 50V J				01
	C0033	UA353270	Mylar Capacitor	2700P 50V J				01
	C0034	UA353390	Mylar Capacitor	3900P 50V J				01
	C0035	FG612470	Ceramic Capacitor-B	470P 50V K				01
	C0036	UR866100	Electrolytic Cap.	1.00 50.0V				01
	CN001	VB390200	Connector Base Post	PH 6P TE				01
	CN002	VB390800	Connector Base Post	PH 12P TE				01
	CN003	VB390000	Connector Base Post	PH 4P TE				01
	IC001	XF751A00	IC	M5227P		EQUALIZER		04
	IC002	XF751A00	IC	M5227P		EQUALIZER		04
	R0001	HF756330	Carbon Resistor	3.3K 1/4 J				01
	R0002	HF755680	Carbon Resistor	680.0 1/4 J				01
	R0003	HF757180	Carbon Resistor	18.0K 1/4 J				01
	R0004	HF756390	Carbon Resistor	3.9K 1/4 J				01
	R0005	HF757180	Carbon Resistor	18.0K 1/4 J				01
	R0006	HF756270	Carbon Resistor	2.7K 1/4 J				01
	R0007	HF757220	Carbon Resistor	22.0K 1/4 J				01

*: New Parts

RANK: Japan only

	REF NO.	PART NO.	DESCRIPTION			REMARKS		QTY	RANK
	R0008	HF757120	Carbon Resistor	12.0K 1/4 J					01
	R0009	HF756820	Carbon Resistor	8.2K 1/4 J					01
	R0010	HF757220	Carbon Resistor	22.0K 1/4 J					01
	R0011	HF756270	Carbon Resistor	2.7K 1/4 J					01
	R0012	HF756330	Carbon Resistor	3.3K 1/4 J					01
	R0013	HF756330	Carbon Resistor	3.3K 1/4 J					01
	R0014	HF755680	Carbon Resistor	680.0 1/4 J					01
	R0015	HF757180	Carbon Resistor	18.0K 1/4 J					01
	R0016	HF756390	Carbon Resistor	3.9K 1/4 J					01
	R0017	HF757180	Carbon Resistor	18.0K 1/4 J					01
	R0018	HF756270	Carbon Resistor	2.7K 1/4 J					01
	R0019	HF757220	Carbon Resistor	22.0K 1/4 J					01
	R0020	HF757120	Carbon Resistor	12.0K 1/4 J					01
	R0021	HF756820	Carbon Resistor	8.2K 1/4 J					01
	R0022	HF757220	Carbon Resistor	22.0K 1/4 J					01
	R0023	HF756270	Carbon Resistor	2.7K 1/4 J					01
	R0024	HF756330	Carbon Resistor	3.3K 1/4 J					01
		VN564800	Circuit Board	EXP			(XK430C0)		07
	CN1	VB390200	Connector Base Post	PH 6P TE					01
	CN2	VB390000	Connector Base Post	PH 4P TE					01
	VR	VA228800	Rotary Variable Resistor	B 10K RK16Y11L		EXP VOLUME			05
*		V7877700	Circuit Board	INLET		J	(X0337B0)		
*		V8034500	Circuit Board	INLET		Q	(X0337B0)		
*		V8158000	Circuit Board	INLET		V	(X0337B0)		
		- -	Wire	0.55			(MJ72105)		
	A	VP206500	Fuse Holder	EYF-52BC					01
	B	VP206500	Fuse Holder	EYF-52BC					01
	C0001	VA078900	Jumper Wire	0.55					
	CN001	LB932040	Base Post Connector	VH 4P TE					01
⚠	F0001	KB003590	Fuse	3.00A JU		J			01
⚠	F0001	KB003060	Fuse	1.60A S		Q			01
⚠	F0001	KB003090	Fuse	3.15A S		V			01
⚠	JK001	VT308100	AC Inlet	2P CCT9302-0101M		AC INLET J,Q			02
⚠	JK001	VT308200	AC Inlet	2P CCT9302-0201		AC INLET V			02
*		V7661000	Circuit Board	LCD			(X0261A0)		
		- -	Jumper Wire	0.55			(VA07890)		
	C0001	UI546470	Electrolytic Cap.	4.70 25.0V					01
*	C0002	VE119200	Electrolytic Cap.	47.00 6.3V					01
	CN001	VB390500	Connector Base Post	PH 9P TE					03
	CN002	VB389800	Connector Base Post	PH 2P TE		}			01
	CN002	VB858100	Connector Base Post	PH 2P SE		}			01
	CN003	VB390400	Connector Base Post	PH 8P TE					01
*	CN004	V7675000	Connector Receptacle	MDF7 14P BE					05
	R0001	HF457100	Carbon Resistor	10.0K 1/4 J					01
	R0002	HF457330	Carbon Resistor	33.0K 1/4 J					01
	R0003	HF457470	Carbon Resistor	47.0K 1/4 J					01
	R0004	HF456330	Carbon Resistor	3.3K 1/4 J					01
	R0005	HF456100	Carbon Resistor	1.0K 1/4 J					01
	R0006	HF454220	Carbon Resistor	22.0 1/4 J					01
	R0007	HF454270	Carbon Resistor	27.0 1/4 J					01
	TH001	VM999600	Thermistor	ERT D2FGL801S 800					01
	TR001	IA101590	Transistor	2SA1015 O,Y					01
	TR002	IC1815M0	Transistor	2SC1815 Y,GR					01
*		V7552800	Circuit Board	MIDI			(X0091A0)		
		- -	Jumper Wire	0.55			(VA07890)		
		VL409900	GND Wire	L=90					03
	C0001	US064100	Ceramic Capacitor-B (chip)	0.0100 50V K					01
	C0002	US064100	Ceramic Capacitor-B (chip)	0.0100 50V K					01
	CN001	VB390200	Connector Base Post	PH 6P TE					01
	D0001	VV925900	Diode	RLS-73 TE-11					01
	IC001	VD473200	Photo Coupler	6N137					05
	JK001	VT202500	DIN Connector	5P YKF51-50		MIDI IN			01
	JK002	VT202500	DIN Connector	5P YKF51-50		MIDI OUT			01
	L0001	VQ724900	Chip Inductance	BK2125HM601-T					01
	-0004	VQ724900	Chip Inductance	BK2125HM601-T					01
	R0001	RD356100	Carbon Resistor (chip)	1.0K 63M J					01

*: New Parts

RANK: Japan only

	REF NO.	PART NO.	DESCRIPTION			REMARKS	QTY	RANK
	R0002	RD357100	Carbon Resistor (chip)	10K 63M J				01
	R0003	RD357220	Carbon Resistor (chip)	22K 63M J				01
	R0004	RD357220	Carbon Resistor (chip)	22K 63M J				01
	R0005	RD355220	Carbon Resistor (chip)	220 63M J				01
	-0007	RD355220	Carbon Resistor (chip)	220 63M J				01
	TR001	VV925400	Transistor	2SC2SC2712 GR				01
	TR002	VV925400	Transistor	2SC2SC2712 GR				01
		VU648200	Circuit Board	MK-H		(XR565C0)		09
	2	VB941200	Diode	1SS133,1SS176				01
	5	VK025600	Wire Trap	52147 12P TE				01
	6	VK024900	Wire Trap	52147 5P TE				01
		V0015800	Circuit Board	MK-L		(XU434A0)		09
	2	VB941200	Diode	1SS133,1SS176				01
	3	VK025600	Wire Trap	52147 12P TE				01
	4	VF728300	Wire Trap	52147 6P TE				01
*		V7763600	Circuit Board	NW		(X0253B0)		
	C0001	V5776700	Electrolytic Cap.-BP	2.20 50.0V				01
	C0002	V5776700	Electrolytic Cap.-BP	2.20 50.0V				01
	CN001	LB918040	Base Post Connector	XH 4P TE				01
	CN002	LB918080	Base Post Connector	XH 8P TE				01
	R0001	VC756100	Metal Oxide Film Resistor	8.2 2W J				01
	R0002	VC756100	Metal Oxide Film Resistor	8.2 2W J				01
		VJ661000	Circuit Board	PKH		(XH847A0)		07
		- -	Adhesive Tape	12mm 330m		(VQ35890)		
	CN1	VB390600	Connector Base Post	PH 10P TE				01
		VQ471900	Circuit Board	PKL		(XM405A0)		10
		- -	Adhesive Tape	12mm 330m		(VQ35890)		
	CN1	VF283400	Connector Base Post	PH-16P TE				01
	CN2	VB390200	Connector Base Post	PH 6P TE				01
	CN3	VB390600	Connector Base Post	PH 10P TE				01
	D1	VB941200	Diode	1SS133,1SS176				01
	-21	VB941200	Diode	1SS133,1SS176				01
*		V7712600	Circuit Board	PN1		(V776340)(X0160D0)		
*		V7712700	Circuit Board	PN2		(V776340)(X0160D0)		
*		V7764000	Circuit Board	MVR		(V776340)(X0160D0)		
*		V7712900	Circuit Board	TEMPO		(V776340)(X0160D0)		
		- -	Jumper Wire	0.55		(VA07890)		
	C0401	UI538100	Electrolytic Cap.	100.00 16.0V				01
	C0402	UI538100	Electrolytic Cap.	100.00 16.0V				01
	C0403	US135100	Ceramic Capacitor-F (chip)	0.1000 16V Z				01
	C0404	US135100	Ceramic Capacitor-F (chip)	0.1000 16V Z				01
	C0405	VR898600	Electrolytic Cap.-BP	1.0 50.0V				01
	C0406	VR898600	Electrolytic Cap.-BP	1.0 50.0V				01
	C0407	US061270	Ceramic Capacitor-CH(chip)	27P 50V J				01
	C0408	US061270	Ceramic Capacitor-CH(chip)	27P 50V J				01
	C0409	US064100	Ceramic Capacitor-B (chip)	0.0100 50V K				01
	CN001	VB858900	Connector Base Post	PH 10P SE				01
	CN002	VB858800	Connector Base Post	PH 9P SE				01
	CN003	VK015400	Connector Base Post	PH 13P SE				01
	CN201	VB858200	Connector Base Post	PH 3P SE				01
	CN202	VH904200	Connector Base Post	PH 14P SE				01
	CN301	VH904200	Connector Base Post	PH 14P SE				01
	CN401	VB390800	Connector Base Post	PH 12P TE				01
	DA001	VZ182300	Diode Array	DAP202K T146				01
	-047	VZ182300	Diode Array	DAP202K T146				01
	DA201	VZ182300	Diode Array	DAP202K T146				01
	-208	VZ182300	Diode Array	DAP202K T146				01
	DA301	VZ182300	Diode Array	DAP202K T146				01
	EM401	VD542700	LC Filter	DSS306-93F223Z1				01
	EM402	VD542700	LC Filter	DSS306-93F223Z1				01
	IC401	XC520A00	IC	UPC4570C		OP AMP		01
	LD001	V7767400	LED	SLZ-981B-09-T1		REVERB VOLUME MAX		
	LD002	V7767400	LED	SLZ-981B-09-T1		REVERB VOLUME 6		
	LD003	V7767400	LED	SLZ-981B-09-T1		REVERB VOLUME 5		

*: New Parts

RANK: Japan only

REF NO.	PART NO.	DESCRIPTION			REMARKS	QTY	RANK
LD004	V7767400	LED	SLZ-981B-09-T1		REVERB VOLUME 4		
LD005	V7767400	LED	SLZ-981B-09-T1		REVERB VOLUME 3		
LD006	V7767400	LED	SLZ-981B-09-T1		REVERB VOLUME 2		
LD007	V7767400	LED	SLZ-981B-09-T1		REVERB VOLUME MIN		
LD008	V7767400	LED	SLZ-981B-09-T1		UK VOICE(STRINGS)		
LD009	V7767400	LED	SLZ-981B-09-T1		UK VOICE(ORGAN)		
LD010	V7767400	LED	SLZ-981B-09-T1		UK VOICE(BRASS)		
LD011	V7767400	LED	SLZ-981B-09-T1		UK VOICE(PIANO)		
LD012	V7767400	LED	SLZ-981B-09-T1		UK VOICE(CLARINET)		
LD013	V7767400	LED	SLZ-981B-09-T1		UK VOICE(GUITAR)		
LD014	V7767400	LED	SLZ-981B-09-T1		UK VOICE(SAXOPHONE)		
LD015	V7767400	LED	SLZ-981B-09-T1		UK VOICE(VIBRAPHONE)		
LD016	V7767400	LED	SLZ-981B-09-T1		UK VOICE(CHORUS)		
LD017	V7767400	LED	SLZ-981B-09-T1		UK VOICE(COSMIC)		
LD018	V7767400	LED	SLZ-981B-09-T1		UK VOICE(HARMONICA)		
LD019	V7767400	LED	SLZ-981B-09-T1		UK VOICE(TUTTI)		
LD020	V7767400	LED	SLZ-981B-09-T1		UK VOICE(1)		
LD021	V7767400	LED	SLZ-981B-09-T1		UK VOICE(2)		
LD022	V7767400	LED	SLZ-981B-09-T1		UK VOICE VOLUME MAX		
LD023	V7767400	LED	SLZ-981B-09-T1		UK VOICE VOLUME 6		
LD024	V7767400	LED	SLZ-981B-09-T1		UK VOICE VOLUME 5		
LD025	V7767400	LED	SLZ-981B-09-T1		UK VOICE VOLUME 4		
LD026	V7767400	LED	SLZ-981B-09-T1		UK VOICE VOLUME 3		
LD027	V7767400	LED	SLZ-981B-09-T1		UK VOICE VOLUME 2		
LD028	V7767400	LED	SLZ-981B-09-T1		UK VOICE VOLUME MIN		
LD029	V7767400	LED	SLZ-981B-09-T1		SUSTAIN(UPPER)		
LD030	V7767400	LED	SLZ-981B-09-T1		SUSTAIN(LOWER)		
LD031	V7767400	LED	SLZ-981B-09-T1		SUSTAIN(PEDAL)		
LD032	V7767400	LED	SLZ-981B-09-T1		LK VOICE(STRINGS)		
LD033	V7767400	LED	SLZ-981B-09-T1		LK VOICE(ORGAN)		
LD034	V7767400	LED	SLZ-981B-09-T1		LK VOICE(BRASS)		
LD035	V7767400	LED	SLZ-981B-09-T1		LK VOICE(PIANO)		
LD036	V7767400	LED	SLZ-981B-09-T1		LK VOICE(CLARINET)		
LD037	V7767400	LED	SLZ-981B-09-T1		LK VOICE(GUITAR)		
LD038	V7767400	LED	SLZ-981B-09-T1		LK VOICE(SAXOPHONE)		
LD039	V7767400	LED	SLZ-981B-09-T1		LK VOICE(VIBRAPHONE)		
LD040	V7767400	LED	SLZ-981B-09-T1		LK VOICE(CHORUS)		
LD041	V7767400	LED	SLZ-981B-09-T1		LK VOICE(COSMIC)		
LD042	V7767400	LED	SLZ-981B-09-T1		LK VOICE(HARMONICA)		
LD043	V7767400	LED	SLZ-981B-09-T1		LK VOICE(TUTTI)		
LD044	V7767400	LED	SLZ-981B-09-T1		LK VOICE(1)		
LD045	V7767400	LED	SLZ-981B-09-T1		LK VOICE(2)		
LD046	V7767400	LED	SLZ-981B-09-T1		LK VOICE VOLUME MAX		
LD047	V7767400	LED	SLZ-981B-09-T1		LK VOICE VOLUME 6		
LD048	V7767400	LED	SLZ-981B-09-T1		LK VOICE VOLUME 5		
LD049	V7767400	LED	SLZ-981B-09-T1		LK VOICE VOLUME 4		
LD050	V7767400	LED	SLZ-981B-09-T1		LK VOICE VOLUME 3		
LD051	V7767400	LED	SLZ-981B-09-T1		LK VOICE VOLUME 2		
LD052	V7767400	LED	SLZ-981B-09-T1		LK VOICE VOLUME MIN		
LD053	V7767400	LED	SLZ-981B-09-T1		RHYTHM(SEQ.1)		
LD054	V7767400	LED	SLZ-981B-09-T1		RHYTHM(SEQ.3)		
LD055	V7767400	LED	SLZ-981B-09-T1		RHYTHM(SEQ.2)		
LD056	V7767400	LED	SLZ-981B-09-T1		RHYTHM(SEQ.4)		
LD057	V7767400	LED	SLZ-981B-09-T1		RHYTHM(MARCH)		
LD058	V7767400	LED	SLZ-981B-09-T1		RHYTHM(TANGO)		
LD059	V7767400	LED	SLZ-981B-09-T1		RHYTHM(WALTZ)		
LD060	V7767400	LED	SLZ-981B-09-T1		RHYTHM(LATIN 1)		
LD061	V7767400	LED	SLZ-981B-09-T1		RHYTHM(SWING)		
LD062	V7767400	LED	SLZ-981B-09-T1		RHYTHM(LATIN 2)		
LD063	V7767400	LED	SLZ-981B-09-T1		RHYTHM(BOUNCE)		
LD064	V7767400	LED	SLZ-981B-09-T1		RHYTHM(8 BEAT)		
LD065	V7767400	LED	SLZ-981B-09-T1		RHYTHM(SLOW ROCK)		
LD066	V7767400	LED	SLZ-981B-09-T1		RHYTHM(16 BEAT)		
LD067	V7767400	LED	SLZ-981B-09-T1		RHYTHM(1)		
LD068	V7767400	LED	SLZ-981B-09-T1		RHYTHM(2)		
LD069	V7767400	LED	SLZ-981B-09-T1		RHYTHM VOLUME MAX		
LD070	V7767400	LED	SLZ-981B-09-T1		RHYTHM VOLUME 6		
LD071	V7767400	LED	SLZ-981B-09-T1		RHYTHM VOLUME 5		
LD072	V7767400	LED	SLZ-981B-09-T1		RHYTHM VOLUME 4		
LD073	V7767400	LED	SLZ-981B-09-T1		RHYTHM VOLUME 3		

⁎: New Parts

RANK: Japan only

	REF NO.	PART NO.	DESCRIPTION			REMARKS	QTY	RANK
	LD074	V7767400	LED	SLZ-981B-09-T1		RHYTHM VOLUME 2		
	LD075	V7767400	LED	SLZ-981B-09-T1		RHYTHM VOLUME MIN		
	LD076	V7767400	LED	SLZ-981B-09-T1		KEYBOARD PER.(LOWER)		
	LD077	V7767400	LED	SLZ-981B-09-T1		KEYBOARD PER.(PEDAL 2)		
	LD078	V7767400	LED	SLZ-981B-09-T1		ENTRO. ENDING		
	LD079	V7767400	LED	SLZ-981B-09-T1		RHYTHM(SYNCHRO START)		
	LD080	V7767400	LED	SLZ-981B-09-T1		RHYTHM(START)		
	LD081	V7767400	LED	SLZ-981B-09-T1		RHYTHM(FILL IN)		
	LD082	V7767400	LED	SLZ-981B-09-T1		LEAD VOICE(VIOLIN)		
	LD083	V7767400	LED	SLZ-981B-09-T1		LEAD VOICE(OBOE)		
	LD084	V7767400	LED	SLZ-981B-09-T1		LEAD VOICE(FLUTE)		
	LD085	V7767400	LED	SLZ-981B-09-T1		LEAD VOICE(TRUMPET)		
	LD086	V7767400	LED	SLZ-981B-09-T1		LEAD VOICE(1)		
	LD087	V7767400	LED	SLZ-981B-09-T1		LEAD VOICE(TO LOWER)		
	LD088	V7767400	LED	SLZ-981B-09-T1		LEAD VOICE VOLUME MAX		
	LD089	V7767400	LED	SLZ-981B-09-T1		LEAD VOICE VOLUME 6		
	LD090	V7767400	LED	SLZ-981B-09-T1		LEAD VOICE VOLUME 5		
	LD091	V7767400	LED	SLZ-981B-09-T1		LEAD VOICE VOLUME 4		
	LD092	V7767400	LED	SLZ-981B-09-T1		LEAD VOICE VOLUME 3		
	LD093	V7767400	LED	SLZ-981B-09-T1		LEAD VOICE VOLUME 2		
	LD094	V7767400	LED	SLZ-981B-09-T1		LEAD VOICE VOLUME MIN		
	LD095	V7767400	LED	SLZ-981B-09-T1		PEDAL VOICE(CONTRA BASS)		
	LD096	V7767400	LED	SLZ-981B-09-T1		PEDAL VOICE(ORGAN BASS)		
	LD097	V7767400	LED	SLZ-981B-09-T1		PEDAL VOICE(ELEC. BASS)		
	LD098	V7767400	LED	SLZ-981B-09-T1		PEDAL VOICE(TUBA)		
	LD099	V7767400	LED	SLZ-981B-09-T1		PEDAL VOICE(1)		
	LD100	V7767400	LED	SLZ-981B-09-T1		PEDAL VOICE(TO LOWER)		
	LD101	V7767400	LED	SLZ-981B-09-T1		PEDAL VOICE VOLUME MAX		
	LD102	V7767400	LED	SLZ-981B-09-T1		PEDAL VOICE VOLUME 6		
	LD103	V7767400	LED	SLZ-981B-09-T1		PEDAL VOICE VOLUME 5		
	LD104	V7767400	LED	SLZ-981B-09-T1		PEDAL VOICE VOLUME 4		
	LD105	V7767400	LED	SLZ-981B-09-T1		PEDAL VOICE VOLUME 3		
	LD106	V7767400	LED	SLZ-981B-09-T1		PEDAL VOICE VOLUME 2		
	LD107	V7767400	LED	SLZ-981B-09-T1		PEDAL VOICE VOLUME MIN		
	LD108	V7767400	LED	SLZ-981B-09-T1		BASIC REGIST. 1		
	LD109	V7767400	LED	SLZ-981B-09-T1		BASIC REGIST. 2		
	LD110	V7767400	LED	SLZ-981B-09-T1		BASIC REGIST. 3		
	LD111	V7767400	LED	SLZ-981B-09-T1		BASIC REGIST. 4		
	LD112	V7767400	LED	SLZ-981B-09-T1		BASIC REGIST. 5		
	LD201	V7767400	LED	SLZ-981B-09-T1		RECORD(UPPER/SONG REPEAT)		
	LD202	V7767400	LED	SLZ-981B-09-T1		RECORD(LOWER)		
	LD203	V7767400	LED	SLZ-981B-09-T1		RECORD(PEDAL/S.COPY FROM)		
	LD204	V7767400	LED	SLZ-981B-09-T1		RECORD(CONTROL/S.COPY TO)		
	LD205	V7767400	LED	SLZ-981B-09-T1		PLAY(UPPER)		
	LD206	V7767400	LED	SLZ-981B-09-T1		PLAY(LOWER)		
	LD207	V7767400	LED	SLZ-981B-09-T1		PLAY(PEDAL)		
	LD208	V7767400	LED	SLZ-981B-09-T1		PLAY(CONTROL/SONG DEL)		
	LD209	V7767400	LED	SLZ-981B-09-T1		SHIFT		
	LD210	V7767400	LED	SLZ-981B-09-T1		PAUSE		
	LD211	V7767400	LED	SLZ-981B-09-T1		STOP		
	LD212	V7767400	LED	SLZ-981B-09-T1		PLAY		
	LD215	V7481600	LED	GL3ED403B0V		RECORD/FORMAT		01
	LD216	V7767400	LED	SLZ-981B-09-T1		CUSTOM PLAY		
*	LD217	V7613200	LED Display	SL-8967-10				
*	LD301	V7613100	LED Display	SL-9983-10				
	LD302	V7767400	LED	SLZ-981B-09-T1		BAR/BEAT		
	R0001	HF754470	Carbon Resistor	47.0 1/4 J				01
	-0013	HF754470	Carbon Resistor	47.0 1/4 J				01
	R0201	RD354470	Carbon Resistor (chip)	47 63M J				01
	-0218	RD354470	Carbon Resistor (chip)	47 63M J				01
	R0301	HF754470	Carbon Resistor	47.0 1/4 J				01
	-0304	HF754470	Carbon Resistor	47.0 1/4 J				01
	R0305	RD354470	Carbon Resistor (chip)	47 63M J				01
	R0401	RD357560	Carbon Resistor (chip)	56K 63M J				01
	-0404	RD357560	Carbon Resistor (chip)	56K 63M J				01
	R0405	HF754470	Carbon Resistor	47.0 1/4 J				01
	R0406	HF754470	Carbon Resistor	47.0 1/4 J				01
	R0407	HF755100	Carbon Resistor	100.0 1/4 J				01
	R0408	HF755100	Carbon Resistor	100.0 1/4 J				01
*	SW001	V8889300	Push Switch	EVQ 11Y 07K		REVERB VOLUME MAX		01

*: New Parts

RANK: Japan only

	REF NO.	PART NO.	DESCRIPTION			REMARKS	QTY	RANK
*	SW007	V8889300	Push Switch	EVQ 11Y 07K		REVERB VOLUME MIN		01
*	SW008	V8889300	Push Switch	EVQ 11Y 07K		UK VOICE(STRINGS)		01
*	SW009	V8889300	Push Switch	EVQ 11Y 07K		UK VOICE(ORGAN)		01
*	SW010	V8889300	Push Switch	EVQ 11Y 07K		UK VOICE(BRASS)		01
*	SW011	V8889300	Push Switch	EVQ 11Y 07K		UK VOICE(PIANO)		01
*	SW012	V8889300	Push Switch	EVQ 11Y 07K		UK VOICE(CLARINET)		01
*	SW013	V8889300	Push Switch	EVQ 11Y 07K		UK VOICE(GUITAR)		01
*	SW014	V8889300	Push Switch	EVQ 11Y 07K		UK VOICE(SAXOPHONE)		01
*	SW015	V8889300	Push Switch	EVQ 11Y 07K		UK VOICE(VIBRAPHONE)		01
*	SW016	V8889300	Push Switch	EVQ 11Y 07K		UK VOICE(CHORUS)		01
*	SW017	V8889300	Push Switch	EVQ 11Y 07K		UK VOICE(COSMIC)		01
*	SW018	V8889300	Push Switch	EVQ 11Y 07K		UK VOICE(HARMONICA)		01
*	SW019	V8889300	Push Switch	EVQ 11Y 07K		UK VOICE(TUTTI)		01
*	SW020	V8889300	Push Switch	EVQ 11Y 07K		UK VOICE(1)		01
*	SW021	V8889300	Push Switch	EVQ 11Y 07K		UK VOICE(2)		01
*	SW022	V8889300	Push Switch	EVQ 11Y 07K		UK VOICE VOLUME MAX		01
*	SW028	V8889300	Push Switch	EVQ 11Y 07K		UK VOICE VOLUME MIN		01
*	SW029	V8889300	Push Switch	EVQ 11Y 07K		SUSTAIN(UPPER)		01
*	SW030	V8889300	Push Switch	EVQ 11Y 07K		SUSTAIN(LOWER)		01
*	SW031	V8889300	Push Switch	EVQ 11Y 07K		SUSTAIN(PEDAL)		01
*	SW032	V8889300	Push Switch	EVQ 11Y 07K		LK VOICE(STRINGS)		01
*	SW033	V8889300	Push Switch	EVQ 11Y 07K		LK VOICE(ORGAN)		01
*	SW034	V8889300	Push Switch	EVQ 11Y 07K		LK VOICE(BRASS)		01
*	SW035	V8889300	Push Switch	EVQ 11Y 07K		LK VOICE(PIANO)		01
*	SW036	V8889300	Push Switch	EVQ 11Y 07K		LK VOICE(CLARINET)		01
*	SW037	V8889300	Push Switch	EVQ 11Y 07K		LK VOICE(GUITAR)		01
*	SW038	V8889300	Push Switch	EVQ 11Y 07K		LK VOICE(SAXOPHONE)		01
*	SW039	V8889300	Push Switch	EVQ 11Y 07K		LK VOICE(VIBRAPHONE)		01
*	SW040	V8889300	Push Switch	EVQ 11Y 07K		LK VOICE(CHORUS)		01
*	SW041	V8889300	Push Switch	EVQ 11Y 07K		LK VOICE(COSMIC)		01
*	SW042	V8889300	Push Switch	EVQ 11Y 07K		LK VOICE(HARMONICA)		01
*	SW043	V8889300	Push Switch	EVQ 11Y 07K		LK VOICE(TUTTI)		01
*	SW044	V8889300	Push Switch	EVQ 11Y 07K		LK VOICE(1)		01
*	SW045	V8889300	Push Switch	EVQ 11Y 07K		LK VOICE(2)		01
*	SW046	V8889300	Push Switch	EVQ 11Y 07K		LK VOICE VOLUME MAX		01
*	SW052	V8889300	Push Switch	EVQ 11Y 07K		LK VIOCE VULUME MIN		01
*	SW053	V8889300	Push Switch	EVQ 11Y 07K		RHYTHM(SEQ.1)		01
*	SW054	V8889300	Push Switch	EVQ 11Y 07K		RHYTHM(SEQ.3)		01
*	SW055	V8889300	Push Switch	EVQ 11Y 07K		RHYTHM(SEQ.2)		01
*	SW056	V8889300	Push Switch	EVQ 11Y 07K		RHYTHM(SEQ.4)		01
*	SW057	V8889300	Push Switch	EVQ 11Y 07K		RHYTHM(MARCH)		01
*	SW058	V8889300	Push Switch	EVQ 11Y 07K		RHYTHM(TANGO)		01
*	SW059	V8889300	Push Switch	EVQ 11Y 07K		RHYTHM(WALTZ)		01
*	SW060	V8889300	Push Switch	EVQ 11Y 07K		RHYTHM(LATIN 1)		01
*	SW061	V8889300	Push Switch	EVQ 11Y 07K		RHYTHM(SWING)		01
*	SW062	V8889300	Push Switch	EVQ 11Y 07K		RHYTHM(LATIN 2)		01
*	SW063	V8889300	Push Switch	EVQ 11Y 07K		RHYTHM(BOUNCE)		01
*	SW064	V8889300	Push Switch	EVQ 11Y 07K		RHYTHM(8 BEAT)		01
*	SW065	V8889300	Push Switch	EVQ 11Y 07K		RHYTHM(SLOW ROCK)		01
*	SW066	V8889300	Push Switch	EVQ 11Y 07K		RHYTHM(16 BEAT)		01
*	SW067	V8889300	Push Switch	EVQ 11Y 07K		RHYTHM(1)		01
*	SW068	V8889300	Push Switch	EVQ 11Y 07K		RHYTHM(2)		01
*	SW069	V8889300	Push Switch	EVQ 11Y 07K		RHYTHM VOLUME MAX		01
*	SW075	V8889300	Push Switch	EVQ 11Y 07K		RHYTHM VOLUME MIN		01
*	SW076	V8889300	Push Switch	EVQ 11Y 07K		KEYBOARD PER.(LOWER)		01
*	SW077	V8889300	Push Switch	EVQ 11Y 07K		KEYBOARD PER.(PEDAL 2)		01
*	SW078	V8889300	Push Switch	EVQ 11Y 07K		ENTRO. ENDING		01
*	SW079	V8889300	Push Switch	EVQ 11Y 07K		RHYTHM(SYNCHRO START)		01
*	SW080	V8889300	Push Switch	EVQ 11Y 07K		RHYTHM(START)		01
*	SW081	V8889300	Push Switch	EVQ 11Y 07K		RHYTHM(FILL IN)		01
*	SW082	V8889300	Push Switch	EVQ 11Y 07K		LEAD VOICE(VIOLIN)		01
*	SW083	V8889300	Push Switch	EVQ 11Y 07K		LEAD VOICE(OBOE)		01
*	SW084	V8889300	Push Switch	EVQ 11Y 07K		LEAD VOICE(FLUTE)		01
*	SW085	V8889300	Push Switch	EVQ 11Y 07K		LEAD VOICE(TRUMPET)		01
*	SW086	V8889300	Push Switch	EVQ 11Y 07K		LEAD VOICE(1)		01
*	SW087	V8889300	Push Switch	EVQ 11Y 07K		LEAD VOICE(TO LOWER)		01
*	SW088	V8889300	Push Switch	EVQ 11Y 07K		LEAD VOICE VOLUME MAX		01
*	SW094	V8889300	Push Switch	EVQ 11Y 07K		LEAD VOICE VOLUME MIN		01
*	SW095	V8889300	Push Switch	EVQ 11Y 07K		PEDAL VOICE(CONTRA BASS)		01
*	SW096	V8889300	Push Switch	EVQ 11Y 07K		PEDAL VOICE(ORGAN BASS)		01

*: New Parts

RANK: Japan only

	REF NO.	PART NO.	DESCRIPTION			REMARKS	QTY	RANK
*	SW097	V8889300	Push Switch	EVQ 11Y 07K		PEDAL VOICE(ELEC. BASS)		01
*	SW098	V8889300	Push Switch	EVQ 11Y 07K		PEDAL VOICE(TUBA)		01
*	SW099	V8889300	Push Switch	EVQ 11Y 07K		PEDAL VOICE(1)		01
*	SW100	V8889300	Push Switch	EVQ 11Y 07K		PEDAL VOICE(TO LOWER)		01
*	SW101	V8889300	Push Switch	EVQ 11Y 07K		PEDAL VOICE VOLUME MAX		01
*	SW107	V8889300	Push Switch	EVQ 11Y 07K		PEDAL VOICE VOLUME MIN		01
*	SW108	V8889300	Push Switch	EVQ 11Y 07K		BASIC REGIST. 1		01
*	SW109	V8889300	Push Switch	EVQ 11Y 07K		BASIC REGIST. 2		01
*	SW110	V8889300	Push Switch	EVQ 11Y 07K		BASIC REGIST. 3		01
*	SW111	V8889300	Push Switch	EVQ 11Y 07K		BASIC REGIST. 4		01
*	SW112	V8889300	Push Switch	EVQ 11Y 07K		BASIC REGIST. 5		01
*	SW201	V8889400	Push Switch	EVQ 11Y 05B		RECORD(UPPER/SONG REPEAT)		01
*	SW202	V8889400	Push Switch	EVQ 11Y 05B		RECORD(LOWER)		01
*	SW203	V8889400	Push Switch	EVQ 11Y 05B		RECORD(PEDAL/S.COPY FROM)		01
*	SW204	V8889400	Push Switch	EVQ 11Y 05B		RECORD(CONTROL/S.COPY TO)		01
*	SW205	V8889400	Push Switch	EVQ 11Y 05B		PLAY(UPPER)		01
*	SW206	V8889400	Push Switch	EVQ 11Y 05B		PLAY(LOWER)		01
*	SW207	V8889400	Push Switch	EVQ 11Y 05B		PLAY(PEDAL)		01
*	SW208	V8889400	Push Switch	EVQ 11Y 05B		PLAY(CONTROL/SONG DEL)		01
*	SW209	V8889300	Push Switch	EVQ 11Y 07K		SHIFT		01
*	SW210	V8889400	Push Switch	EVQ 11Y 05B		PAUSE		01
*	SW211	V8889400	Push Switch	EVQ 11Y 05B		STOP		01
*	SW212	V8889400	Push Switch	EVQ 11Y 05B		PLAY		01
*	SW213	V8889400	Push Switch	EVQ 11Y 05B		SONG SELECT << (TEMPO -)		01
*	SW214	V8889400	Push Switch	EVQ 11Y 05B		SONG SELECT >> (TEMPO +)		01
*	SW215	V8889400	Push Switch	EVQ 11Y 05B		RECORD/FORMAT		01
*	SW216	V8889400	Push Switch	EVQ 11Y 05B		CUSTOM PLAY		01
*	SW301	V8889300	Push Switch	EVQ 11Y 07K		TEMPO DOWN		01
*	SW302	V8889300	Push Switch	EVQ 11Y 07K		TEMPO UP		01
*	VR401	V8100100	Rotary Variable Resistor	A 10K RK14K1220A69		MASTER VOLUME		03
	WH001	- -	GND Wire Black	L=100 1P B6		(V825270)		
*		V7824900	Circuit Board	PRM		J (X0336B0)		
*		V8034300	Circuit Board	PRM		Q (X0336B0)		
*		V8434500	Circuit Board	PRM		V (X0336B0)		
	A	VP206500	Fuse Holder	EYF-52BC				01
	B	VP206500	Fuse Holder	EYF-52BC				01
	JA	- -	Jumper Wire	0.55		J,Q (VA07890)		
	JB	- -	Jumper Wire	0.55		V (VA07890)		
	JC	- -	Jumper Wire	0.55		(VA07890)		
⚠	C0001	VY675000	Capacitor	0.010 250V J.U.C.S				01
	CN001	LB932040	Base Post Connector	VH 4P TE				01
	CN002	LB932050	Base Post Connector	VH 5P TE				01
	CN005	LB932060	Base Post Connector	VH 6P TE		Q		01
	CN006	LB932060	Base Post Connector	VH 6P TE		J		01
	CN007	LB932060	Base Post Connector	VH 6P TE		V		01
⚠	F0001	KB003590	Fuse	3.00A JU		J		01
⚠	F0001	KB003060	Fuse	1.60A S		Q		01
⚠	F0001	KB003090	Fuse	3.15A S		V		01
	LF001	VJ898200	Coil	SN10-500J				04
	LF002	VJ898200	Coil	SN10-500J				04
	LF003	VJ898300	Coil	SC-05-10J				06
		- -	Circuit Board	PU		J (V780650)(X0153E0)		
		- -	Circuit Board	PU		Q,V (V803190)(X0153E0)		
		VT740000	Support, PCB	3T-9 T=9			2	03
		- -	Insulation Sheet			(V801540)		
		- -	Jumper Wire	0.55		(VA07890)		
	A	VP206500	Fuse Holder	EYF-52BC				01
	-F	VP206500	Fuse Holder	EYF-52BC				01
	C0001	VA302600	Ceramic Capacitor-E	0.0100 500V P				01
⚠	C0002	VL232300	Electrolytic Cap.	2200 25.0V				03
⚠	C0003	VL232300	Electrolytic Cap.	2200 25.0V				03
	C0004	VN701200	Electrolytic Cap.	1.00 50.0V				01
	C0005	VV305200	Electrolytic Cap.	100.00 25.0V				01
	C0006	VN701200	Electrolytic Cap.	1.00 50.0V				01
	C0007	VV305200	Electrolytic Cap.	100.00 25.0V				01
⚠ *	C0008	V7848200	Electrolytic Cap.	4700 25.0V				03
⚠ *	C0009	V7848200	Electrolytic Cap.	4700 25.0V				03
	C0010	UR866330	Electrolytic Cap.	3.30 50.0V				01

*: New Parts

RANK: Japan only

	REF NO.	PART NO.	DESCRIPTION			REMARKS	QTY	RANK
	C0011	VV305200	Electrolytic Cap.	100.00 25.0V				01
*	C0012	VN701300	Electrolytic Cap.	2.20 50.0V				01
	C0013	US063100	Ceramic Capacitor-B (chip)	1000P 50V K				01
	C0014	VN694900	Electrolytic Cap.	22.00 16.0V				01
*	C0015	VN701300	Electrolytic Cap.	2.20 50.0V				01
	C0016	US063100	Ceramic Capacitor-B (chip)	1000P 50V K				01
	C0017	VN694900	Electrolytic Cap.	22.00 16.0V				01
	C0018	VV330600	Electrolytic Cap.	470.00 16.0V				01
	C0019	VE326400	Monolithic Mylar Capacitor	0.22 50V J				01
	-0026	VE326400	Monolithic Mylar Capacitor	0.22 50V J				01
	C0028	VV305200	Electrolytic Cap.	100.00 25.0V				01
	-0031	VV305200	Electrolytic Cap.	100.00 25.0V				01
	C0032	US145100	Ceramic Capacitor-F (chip)	0.1000 25V Z				01
	C0033	US145100	Ceramic Capacitor-F (chip)	0.1000 25V Z				01
	C0034	US063100	Ceramic Capacitor-B (chip)	1000P 50V K				01
	C0035	US063100	Ceramic Capacitor-B (chip)	1000P 50V K				01
	CN001	LB932090	Base Post Connector	VH 9P TE				01
	CN002	LB918030	Base Post Connector	XH 3P TE				01
	CN003	VB390000	Connector Base Post	PH 4P TE				01
	CN004	LB918060	Base Post Connector	XH 6P TE				01
	CN005	VB390100	Connector Base Post	PH 5P TE				01
	D0001	VB481900	Diode	11ES4				01
	-0005	VB481900	Diode	11ES4				01
	D0006	- -	Jumper Wire	0.55		(VA07890)		
⚠	DB001	VR253700	Diode Stack	S1NB20 1.0A 200V				02
⚠	DB002	VK421800	Diode Stack	D5SBA20 6.0A 200V				03
⚠	F0001	KB003570	Fuse	250V 2.0A JU		J		01
⚠	F0001	KB003070	Fuse	250V 2.0A S		Q,V		01
⚠	F0002	KB003570	Fuse	250V 2.0A JU		J		01
⚠	F0002	KB003070	Fuse	250V 2.0A S		Q,V		01
⚠	F0003	KB003630	Fuse	5.00A JU		J		01
⚠	F0003	KB003240	Fuse	5.00A S		Q,V		01
	IC001	XJ602A00	IC	NJM78M12FA		REGULATOR +12V		02
	IC002	XD343A00	IC	NJM79M12FA		REGULATOR -12V		03
	IC003	XU131A00	IC	TA8233H		POWER AMP. 30Wx2		06
	IC004	XF291A00	IC	UPC4570G2		OP AMP		03
	J0004	- -	Jumper Wire	0.55		(VA07890)		
	-0007	- -	Jumper Wire	0.55		(VA07890)		
	R0001	RD357120	Carbon Resistor (chip)	12K 63M J				01
	R0002	RD356100	Carbon Resistor (chip)	1.0K 63M J				01
	R0003	RD355560	Carbon Resistor (chip)	560 63M J				01
	R0004	RD357120	Carbon Resistor (chip)	12K 63M J				01
	R0005	RD356100	Carbon Resistor (chip)	1.0K 63M J				01
	R0006	RD355560	Carbon Resistor (chip)	560 63M J				01
	R0007	RD358100	Carbon Resistor (chip)	100K 63M J				01
	R0008	HF753220	Carbon Resistor	2.2 1/4 J				01
	-0011	HF753220	Carbon Resistor	2.2 1/4 J				01
	R0012	RD356560	Carbon Resistor (chip)	5.6K 63M J				01
	R0013	RD356560	Carbon Resistor (chip)	5.6K 63M J				01
	R0014	RD355560	Carbon Resistor (chip)	560 63M J				01
	R0015	RD355560	Carbon Resistor (chip)	560 63M J				01
	R0016	RD356220	Carbon Resistor (chip)	2.2K 63M J				01
	R0017	RD356100	Carbon Resistor (chip)	1.0K 63M J				01
	R0018	RD357100	Carbon Resistor (chip)	10K 63M J				01
	R0019	- -	Jumper Wire	0.55		(VA07890)		
	R0025	RD357100	Carbon Resistor (chip)	10K 63M J				01
	R0026	RD358100	Carbon Resistor (chip)	100K 63M J				01
	R0027	RD357100	Carbon Resistor (chip)	10K 63M J				01
	R0028	RD358100	Carbon Resistor (chip)	100K 63M J				01
	R0031	RD358100	Carbon Resistor (chip)	100K 63M J				01
	R0032	RD357100	Carbon Resistor (chip)	10K 63M J				01
	R0033	RD358100	Carbon Resistor (chip)	100K 63M J				01
	R0034	RD357100	Carbon Resistor (chip)	10K 63M J				01
	R0035	RD358100	Carbon Resistor (chip)	100K 63M J				01
	-0040	RD358100	Carbon Resistor (chip)	100K 63M J				01
	R0041	RD356100	Carbon Resistor (chip)	1.0K 63M J				01
	R0042	RD356100	Carbon Resistor (chip)	1.0K 63M J				01
	R0048	RD355470	Carbon Resistor (chip)	470 63M J				01
	R0049	RD355470	Carbon Resistor (chip)	470 63M J				01
	RY001	VK881200	Relay	DC G5Z-2A-YA 12V				04

*: New Parts

RANK: Japan only

	REF NO.	PART NO.	DESCRIPTION			REMARKS	QTY	RANK
	RY002	VK881200	Relay	DC G5Z-2A-YA 12V				04
	TR001	VV556400	Transistor	2SC2412K Q,R,S				01
	TR002	VV556400	Transistor	2SC2412K Q,R,S				01
	TR005	VV556400	Transistor	2SC2412K Q,R,S				01
	TR006	VV556500	Transistor	2SA1037AK Q,R,S				01
	TR007	VV556400	Transistor	2SC2412K Q,R,S				01
		- -	Circuit Board	SWPS		J (V780670)(X0154B0)		
		- -	Circuit Board	SWPS		Q,V (V803200)(X0154B0)		
		- -	Jumper Wire	0.55		(VA07890)		
	A	VP206500	Fuse Holder	EYF-52BC				01
	B	VP206500	Fuse Holder	EYF-52BC				01
	C0001	VA302600	Ceramic Capacitor-E	0.0100 500V P				01
⚠	C0002	V7535100	Electrolytic Cap.	3900 35.0V		}		04
⚠	C0002	V8297300	Electrolytic Cap.	3900 35.0V		}		04
	C0003	VD287800	Semiconductive Cera. Cap.	0.1000 50V Z				01
	C0004	FG644100	Ceramic Capacitor-F	0.0100 50V Z				01
	C0005	V7016500	Electrolytic Cap.	1000 35.0V		}		02
	C0005	V8297400	Electrolytic Cap.	1000 35.0V		}		02
	C0006	VD287800	Semiconductive Cera. Cap.	0.1000 50V Z				01
⚠	C0008	V7535100	Electrolytic Cap.	3900 35.0V		}		04
⚠	C0008	V8297300	Electrolytic Cap.	3900 35.0V		}		04
	C0009	VD287800	Semiconductive Cera. Cap.	0.1000 50V Z				01
	C0010	VD287800	Semiconductive Cera. Cap.	0.1000 50V Z				01
	C0011	V7016500	Electrolytic Cap.	1000 35.0V		}		02
	C0011	V8297400	Electrolytic Cap.	1000 35.0V		}		02
	C0012	VD287800	Semiconductive Cera. Cap.	0.1000 50V Z				01
	C0014	UR866100	Electrolytic Cap.	1.00 50.0V				01
	C0015	UR837330	Electrolytic Cap.	33.00 16.0V				01
	C0016	VD287800	Semiconductive Cera. Cap.	0.1000 50V Z				01
	C0017	VD287800	Semiconductive Cera. Cap.	0.1000 50V Z				01
	CN001	LB932030	Base Post Connector	VH 3P TE				01
	CN002	LB932040	Base Post Connector	VH 4P TE				01
	CN003	LB932020	Base Post Connector	VH 2P TE				01
	D0001	V7611000	Diode	RK46				02
	D0002	VB481900	Diode	11ES4				01
	D0003	V7611000	Diode	RK46				02
	D0004	VB481900	Diode	11ES4				01
	-0011	VB481900	Diode	11ES4				01
⚠	DB001	VQ111500	Diode Stack	D3SBA20-4103 4.0A				03
⚠	F0001	KB003630	Fuse	5.00A JU		J		01
⚠	F0001	KB003240	Fuse	5.00A S		Q,V		01
	IC001	XT442A00	IC	SI-8050S		REGULATOR +5V		05
*	IC002	XZ274A00	IC	SI-8033S(LF1101)		REGULATOR +3.3V		05
	L0001	VZ875300	Coil	HP-032J				06
	L0002	VZ875300	Coil	HP-032J				06
	L0003	VF790900	Coil	SU10V-D20010 10uH				03
	L0004	VF790900	Coil	SU10V-D20010 10uH				03
*	R0001	VC756900	Metal Oxide Film Resistor	18.0 2W J				01
*	R0002	VC756900	Metal Oxide Film Resistor	18.0 2W J				01
	R0003	HF754680	Carbon Resistor	68.0 1/4 J				01
	R0004	HF754680	Carbon Resistor	68.0 1/4 J				01
	R0005	HF757150	Carbon Resistor	15.0K 1/4 J				01
	R0006	HF756680	Carbon Resistor	6.8K 1/4 J				01
	R0007	HF756100	Carbon Resistor	1.0K 1/4 J				01
	R0008	HF757270	Carbon Resistor	27.0K 1/4 J				01
	R0009	HF757120	Carbon Resistor	12.0K 1/4 J				01
	R0010	HF757120	Carbon Resistor	12.0K 1/4 J				01
	R0011	HF757100	Carbon Resistor	10.0K 1/4 J				01
	R0012	HF757100	Carbon Resistor	10.0K 1/4 J				01
	R0013	HF757150	Carbon Resistor	15.0K 1/4 J				01
	R0014	HF756560	Carbon Resistor	5.6K 1/4 J				01
	R0015	HF756220	Carbon Resistor	2.2K 1/4 J				01
	TR001	IC1815M0	Transistor	2SC1815 Y,GR				01
	-009	IC1815M0	Transistor	2SC1815 Y,GR				01
	TR010	VZ676400	Transistor	2SC1741STPQR				01
*		V7764200	Circuit Board	TA		(X0179B0)		
	C0001	VL763100	Electrolytic Cap.	6800 6.3				03
	C0002	UR839100	Electrolytic Cap.	1000 16.0V				01

*: New Parts

RANK: Japan only

	REF NO.	PART NO.	DESCRIPTION			REMARKS	QTY	RANK
	CN001	LB932040	Base Post Connector	VH 4P TE				01
	CN002	LB918020	Base Post Connector	XH 2P TE				01
	CN003	LB918030	Base Post Connector	XH 3P TE				01
	CN004	VB390000	Connector Base Post	PH 4P TE				01
	L0001	VN381200	Coil	SNT-D20TF 10uH				03
	L0002	VN381200	Coil	SNT-D20TF 10uH				03
*		V7553000	Circuit Board	TO HOST		(X0090A0)		
		- -	Jumper Wire	0.55		(VA07890)		
		VL409900	GND Wire Black	L=90				03
	C0001	UR837100	Electrolytic Cap.	10.00 16.0V				01
	C0002	UN817470	Electrolytic Cap.-BP	47.00 6.3V				01
	C0003	US061220	Ceramic Capacitor-CH(chip)	22P 50V J				01
	C0004	US064100	Ceramic Capacitor-B (chip)	0.0100 50V K				01
	C0005	US135100	Ceramic Capacitor-F (chip)	0.1000 16V Z				01
	C0006	US064100	Ceramic Capacitor-B (chip)	0.0100 50V K				01
	C0007	UR837100	Electrolytic Cap.	10.00 16.0V				01
	CN001	VB390400	Connector Base Post	PH 8P TE				01
	CN002	VB390200	Connector Base Post	PH 6P TE				01
	D0001	VV925900	Diode	RLS-73 TE-11				01
	-0003	VV925900	Diode	RLS-73 TE-11				01
	IC001	XY447A00	IC	TC7SU04F		INVERTER		01
	IC002	XU073A00	IC	SN75C1168NSR		LINE DRIVER/RECEIVER		05
	JK001	VV269500	DIN Connector	DIN 8P MD-S813		TO HOST		03
	L0001	VQ724900	Chip Inductance	BK2125HM601-T				01
	-0007	VQ724900	Chip Inductance	BK2125HM601-T				01
	R0001	RD357100	Carbon Resistor (chip)	10K 63M J				01
	-0004	RD357100	Carbon Resistor (chip)	10K 63M J				01
	R0005	RD350000	Carbon Resistor (chip)	0 63M J				01
	R0006	RD355100	Carbon Resistor (chip)	100 63M J				01
	R0007	RD355100	Carbon Resistor (chip)	100 63M J				01
	R0008	RD356100	Carbon Resistor (chip)	1.0K 63M J				01
	R0009	RD357100	Carbon Resistor (chip)	10K 63M J				01
	-0011	RD357100	Carbon Resistor (chip)	10K 63M J				01
	R0012	RD355220	Carbon Resistor (chip)	220 63M J				01
	R0013	RD355220	Carbon Resistor (chip)	220 63M J				01
	R0014	RD357100	Carbon Resistor (chip)	10K 63M J				01
	R0015	RD357100	Carbon Resistor (chip)	10K 63M J				01
	SW001	VQ665200	Slide Switch	SSSF144-S06N-0		HOST SELECT		03
	TJ001	RD150000	Carbon Resistor (chip)	0.0 1/4 J				01
	-007	RD150000	Carbon Resistor (chip)	0.0 1/4 J				01
⚠		V2916900	AC Cord Set	J 2P 7A 2.5m		J		05
⚠		V2917100	AC Cord Set	E 2P 2.5S 2.5m		Q		05
⚠		V2917000	AC Cord Set	UC 2P 7A 2.44m		V		06
⚠ *		X0116A00	Power Transformer	J		J		
⚠ *		X0118A00	Power Transformer	N IEC65 E		Q,V		
		V6492300	Floppy Disk Drive	ALPS DF354H		MUSIC DISK RECORDER		13
*		V7846200	LCD Unit			}		
*		V9365500	LCD Unit					
⚠		VC843500	Push Switch	SDDLB1216A J.U.C.S		POWER		03
		VA228500	Micro Switch	SPPB13001A		L/R FOOT SW (EXP.)	2	01
*		X0263A00	Speaker	16.0cm 4 ohm 40W		WOOFER	2	
*		X0264A00	Speaker	5.0cm 4 ohm 40W		TWEETER	2	

*: New Parts

RANK: Japan only

■EL-100 BLOCK DIAGRAM

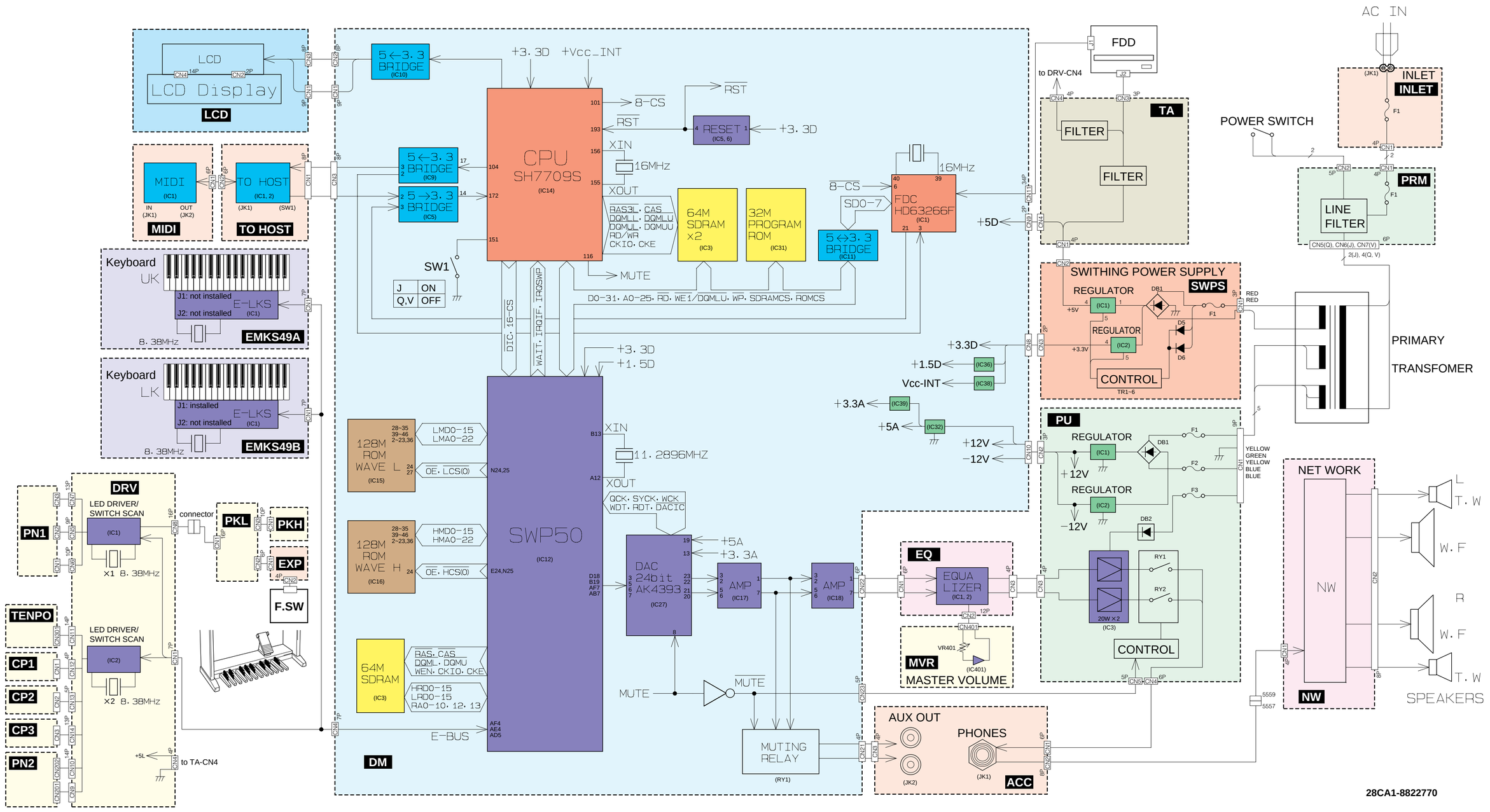

28CA1-8822770

■EL-100 CIRCUIT DIAGRAM INDEX

ACC	4	EXP	5	PKL	5
CP1	3	INLET	4	PN1	3
CP2	3	LCD	5	PN2	3
CP3	3	MIDI	5	PRM	4
DM	2	MK-H	5	PU	4
DRV	3	MK-L	5	SWPS	4
EMKS49A	5	MVR	3	TA	4
EMKS49B	5	NW	4	TEMPO	3
EQ	4	PKH	5	TO HOST	5

■EL-100 WIRING

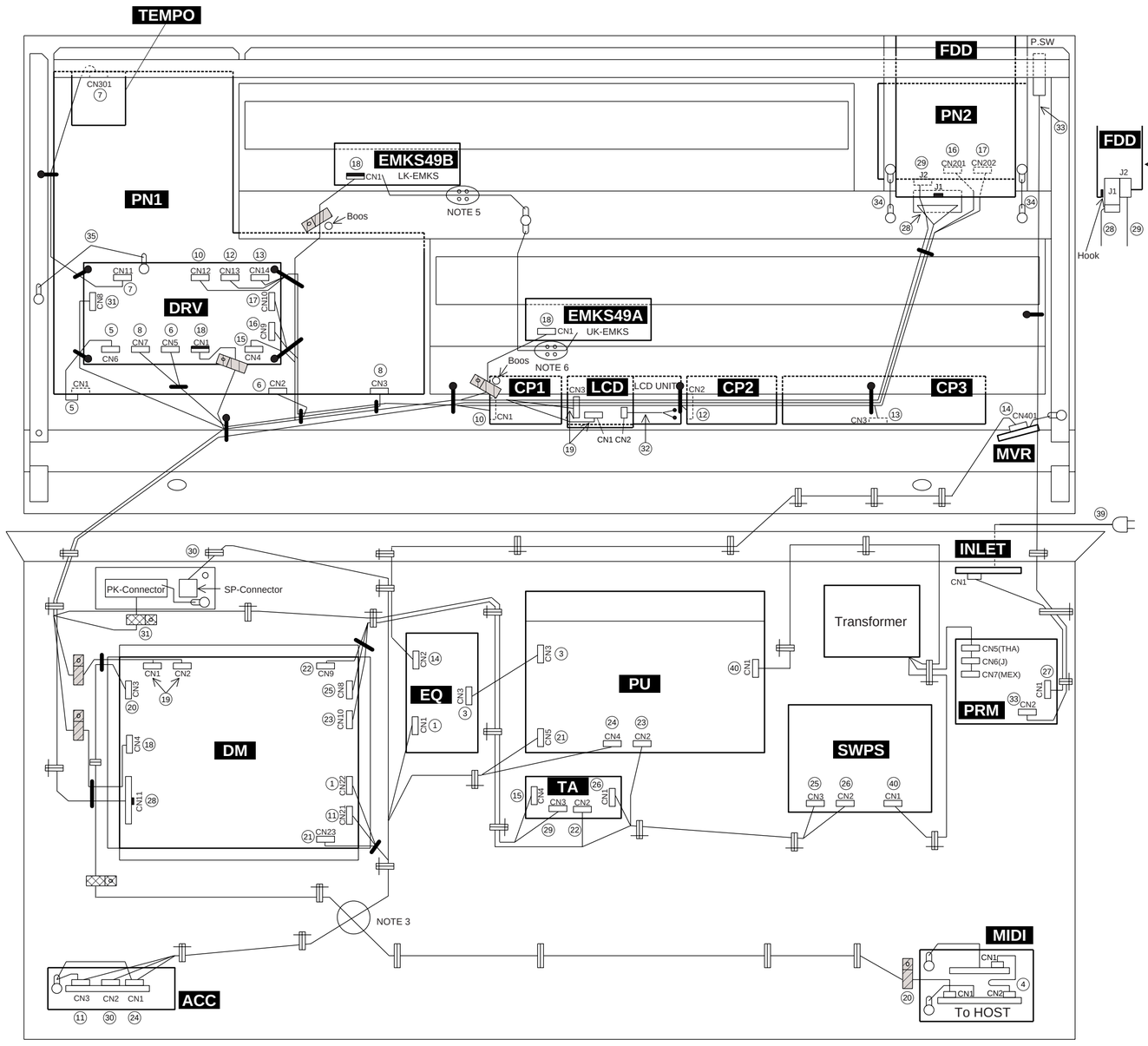

GND Wire harness

Location	To	Part No.	Kit name
34	FDD UNIT ~ FG	V782330	–
35	DRV ~ FG	V868510	–

NW Wire harness

36	SP–Connector ~ NW-CN1	V779310	–

NW – SP Wire harness

37	NW-CN2 ~ SPEAKER	V779320	–

PKL Wire harness unit

38	PKL-CN1 ~ PK-Connector	V822580	–

Cord set with piug

Location	To	To	Part No.	Kit name
39	J	INLET ~ AC	V291690	–
	MEX	INLET ~ AC	V291700	–
	THA	INLET ~ AC	V291710	–

Note 1. Kit name
1 : Wire harness kit 1
2 : Wire harness kit 2
3 : Wire harness kit 3

Note 2. For connector hook

Note 3. It takes about so that it may cross, as shown in a figure.

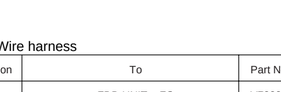

Note 4. Symbol table

Symbol	Name
	Ferrite core
	Cord binder (vinyl tie)
	Lug tarminal
	Filament tape
	Cadle holder
	Insulok ties

Note 5. Earth wire processing

An earth wire is pushed snd it fixes.

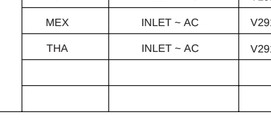

Note 6. Earth wire processing

An earth wire is pushed snd it fixes.

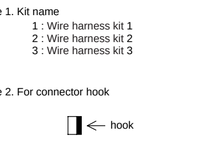

KRD – KRD Wire harness

Location	To	Part No.	Kit name
1	DM-CN22 ~ EQ-CN1	VJ98120	2
2	PKH-CN1 ~ PKL-CN3	VJ98920	–
3	EQ-CN3 ~ PU-CN3	VK09740	–
4	To HOST-CN2 ~ MIDI-CN1	VK09800	–
5	DRV-CN6 ~ PN1-CN1	VK10150	–
6	DRV-CN5 ~ PN1-CN2	VK10420	1
7	DRV-CN11 ~ TEMPO-CN301	VK10650	–
8	DRV-CN7 ~ PN1-CN3	VK10890	1
9	PKL-CN2 ~ EXP-CN1	VK10960	–
10	DRV-CN12 ~ CP1-CN1	VK11080	–
11	DM-CN21 ~ ACC-CN3	VK11210	2
12	DRV-CN13 ~ CP2-CN2	VK11640	–
13	DRV-CN14 ~ CP3-CN3	VK12180	–
14	EQ-CN2 ~ MVR-CN401	VK12760	2
15	DRV-CN4 ~ TA-CN4	VK12830	1
16	DRV-CN9 ~ PN2-CN201	VK12680	–
17	DRV-CN10 ~ PN2-CN202	VK12780	–

DM – DRV – MKS Wire harness

18	DM-CN4 ~ DRV-CN1 ~ LK-EMKS-CN1 ~ UK-EMKS-CN1	V893230	1

DM – LCD Wire harness

19	DM-CN1 ~ LCD-CN1 DM-CN2 ~ LCD-CN3	V893240	1

TO HOST Wire harness

20	DM-CN3 ~ To HOST-CN1	V845440	–

PH – PH Wire harness

21	DM-CN23 ~ PU-CN5	V779340	2

XH – XH Wire harness

22	DM-CN9 ~ TA-CN2	V779290	3
23	DM-CN10 ~ PU-CN2	V779300	3
24	ACC-CN1 ~ PU-CN4	V810540	2

VH – VH Wire harness

25	DM-CN8 ~ SWPS-CN3	V779270	3
26	TA-CN1 ~ SWPS-CN2	V779280	3
27	INLET-CN1 ~ PRM-CN1	V845540	–

Flat cable

28	DM-CN11 ~ FDD-UNIT-J1	V779250	–

FDD Wire harness

29	TA-CN3 ~ FDD-UNIT-J2	V779260	1

ACC – SP Wire harness

30	ACC-CN2 ~ SP-Connector	V779330	2

PKH Wire harness

31	DRV-CN8 ~ PK-Connector	V810320	1

LCD – PH Wire harness

32	LCD-CN2 ~ LCD UNIT	V784630	–

PSW Wire harness

33	PRM-CN2 ~ P.SW	V878050	–

2NE-V784160-0030 2

■EL-100 OVERALL CIRCUIT DIAGRAM (DM)

DM

to FDD unit - J1 <P.4 E-4>

to LCD-CN1 <P.5 N-5>

to LCD-CN3 <P.5 N-6>

to TO HOST-CN1 <P.5 B-4>

to DRV-CN1 <P.3 M-7>, EMKS49A-CN1 <P.5 B-9>, EMKS49B-CN1 <P.5 B-9>

E-BUS

to SWPS-CN3 <P.4 L-4>

to TA-CN2 <P.4 D-3>

to PU-CN2 <P.4 J-7>

AND INVERTER

OP AMP

OP AMP

FDC IC1 HD63266F

TRANSCEIVER IC5 74LVC245A

TRANSCEIVER IC6 74HCT245AFT

TRANSCEIVER IC9 74HCT245AFT

TRANSCEIVER

CPU (SH3) IC14 HD6417709/A/S

SWP50 IC12

SDRAM 64M IC3 64M SDRAM

WORKRAM-SDA64M-4M

JTAG

REGULATOR IC30 LM1117DMP-ADJ +1.5D

REGULATOR IC31 LM1117DMP-ADJ +VCC_3VT

REGULATOR +5V IC30 LM1117DMP-ADJ

REGULATOR +3.3V IC32 TA48033S

DRAM 64M IC23 64M SDRAM

DRAM 64M IC22 64M SDRAM

MASK ROM 32M PROGRAM IC26 32M MASK

FLASH ROM 32M PROGRAM IC25 32M 3V FLASH

not installed

MASK ROM 128M WAVE-L IC15 128M MASK

FLASH ROM 128M WAVE-L IC19 128M 3V FLASH

MASK ROM 128M WAVE-H IC16 128M MASK

FLASH ROM 128M WAVE-H IC20 128M 3V FLASH

not installed

DAC IC27 AK4393

J/E Select

SW1	
J	ON
E	OFF

to ACC-CN3 <P.4 N-7>

to EQ-CN1 <P.4 A-10>

to PU-CN5 <P.4 M-10>

28CC1-8822771 ⚠

Note: See parts list for details of circuit board component parts.

■EL-100 OVERALL CIRCUIT DIAGRAM (DRV, PN1, PN2, CP1, CP2, CP3, TEMPO)

PN1

REVERB VOLUME

UPPER KEYBOARD VOICE

LOWER KEYBORAD VOICE

LEAD VOICE

PEDAL VOICE

BASIC REGIST.

RHYTHM

LED DRIVER / SWITCH SCAN.
IC1
UPD78003 1AYGK-NO1

28CC1-8822786

DRV

※IC1/2
S[✱] : Lo-Active
L[✱] : Lo-Active
D[✱] : Hi-Active

TEST-POINT(✱)

LED✱✱抵抗(10Ω)

PK connector

to PKL-CN1 <P.5 K-4>

to DM-CN4 <P.2 B-4>,
EMKS49A-CN1 <P.5 B-9>,
EMKS49B-CN1 <P.5 B-9>

to TA-CN4 <P.4 E-3>

TEMPO

LD301
SL-9903-10

BAR/BEAT

MATRIX OF 7-SEGMENT-LED (TEMPO)

	DB7 [0]	DB6 [1]	DB5 [2]	DB4 [3]	DB3 [4]	DB2 [5]	DB1 [6]	DB0 [7]
LB[0]	G1	F1	A1	B1	DP1	C1	D1	E1
LB[1]	B2	A2	F2	G2	E2	D2	C2	DP2
LB[2]	B4	A4	F4	DP4	E4	D4	G4	C4
LB[3]	F3	G3	A3	B3	DP3	C3	D3	E3

CP1

DATA CONTROL

CP2

PAGE

DATA CONTROL

CP3

DISPLAY SELECT

REGISTRATION MEMORY

PN2

MATRIX OF 7-SEGMENT-LED (PN2)

	DB7 [0]	DB6 [1]	DB5 [2]	DB4 [3]	DB3 [4]	DB2 [5]	DB1 [6]	DB0 [7]
LB[5]	1g	2g	3g	4g				
LB[6]	–	–	–	–	1D5	2D5	3D5	4D5
LB[7]	1g	2g	3g	4g				
LB[8]	1e	2e	3e	4e				
LB[9]	1f	2f	3f	4f				
LB[10]	1D	2D	3D	4D				
LB[11]	1a	2a	3a	4a				
LB[12]	1c	2c	3c	4c				

Note: See parts list for details of circuit board component parts.

■EL-100 OVERALL CIRCUIT DIAGRAM (PU, EQ, MVR, ACC, NW, TA, SWPS, PRM, INLET)

■ TO SERVICE PERSONNEL

Critical Components Information
Components having special characteristics are marked⚠ and must be replaced with parts having specifications equel to those originally installed.

Note: See parts list for details of circuit board component parts.

抵抗: Metal Oxide Film Resistor
(セ): Ceramic Capacitor
(マ): Mylar Capacitor

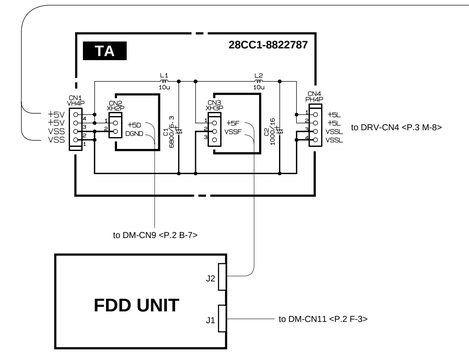

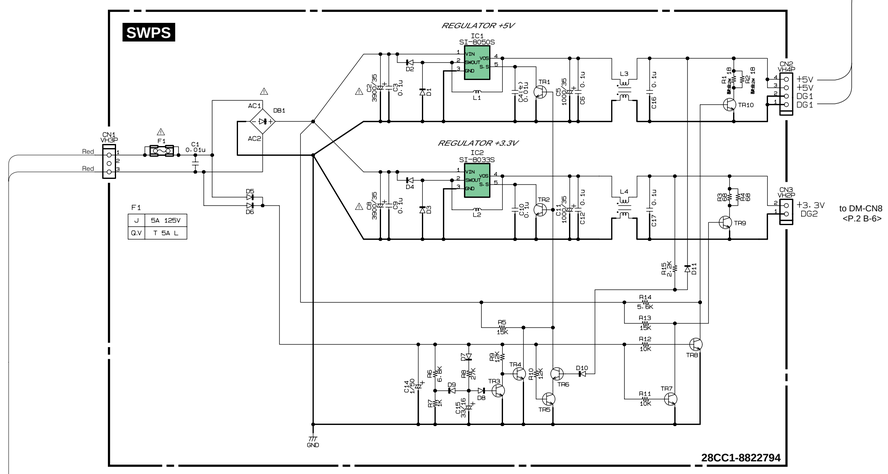

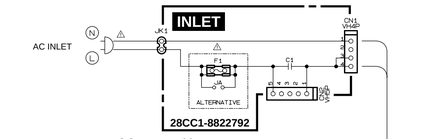

J: Japanese model
Q: South-east Asia model
V: General export model (110 V)

MODEL	JK1	CN1	CN2	F1	C1	JA
J	NON-POLAR	○	×	3A	J	×
Q	NON-POLAR	○	×	T1.6A	J	×
V	POLAR	○	×	T3.15A	J	×

○: installed ×: not installed

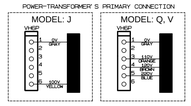

J: Japanese model
Q: South-east Asia model
V: General export model (110 V)

MODEL	F1	F2	CN5	CN6	CN7	JA	JB	PT/PRI-CN	JC	CN4	CN3
J	3A 250V	×	×	○	×	○	×	CN6	○	×	×
Q	T1.6A L	×	○	×	×	○	×	CN5	○	×	×
V	T3.15A L	×	×	×	○	×	○	CN7	○	×	×

○: installed ×: not installed

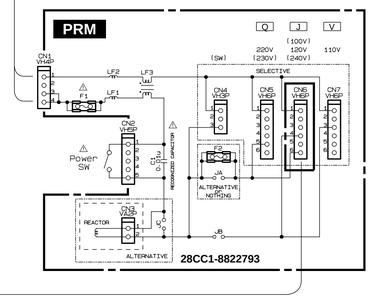



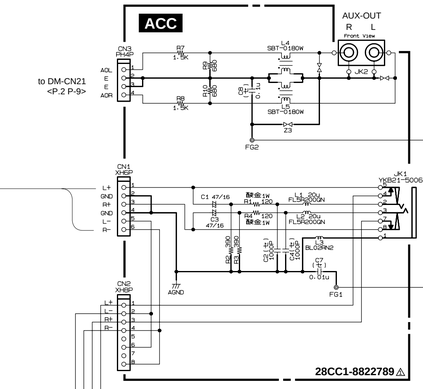

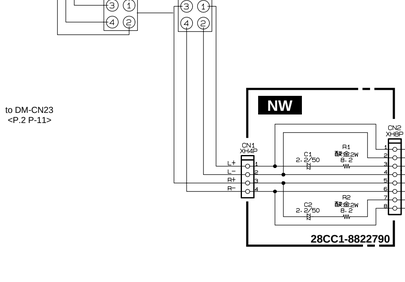

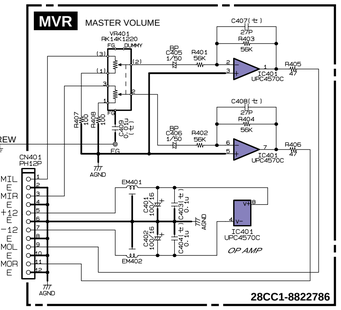

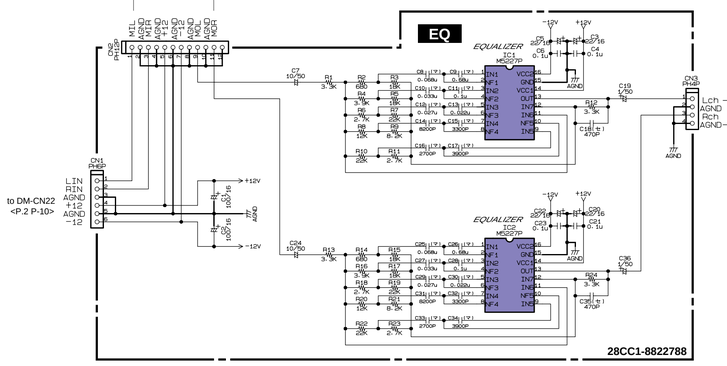

■EL-100 OVERALL CIRCUIT DIAGRAM (MIDI, TO HOST, LCD, PKL, PKH, EXP, EMKS49A, EMKS49B, MK-H, MK-L)

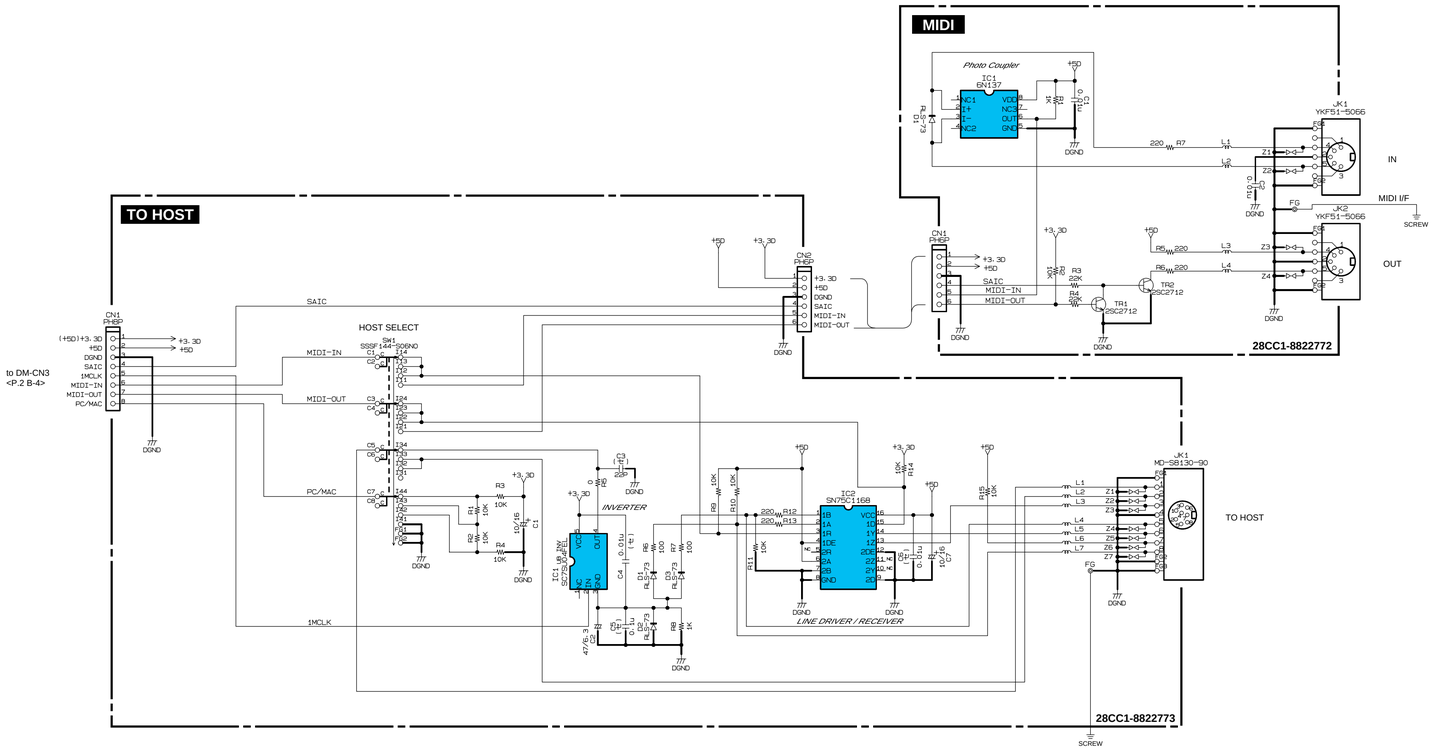

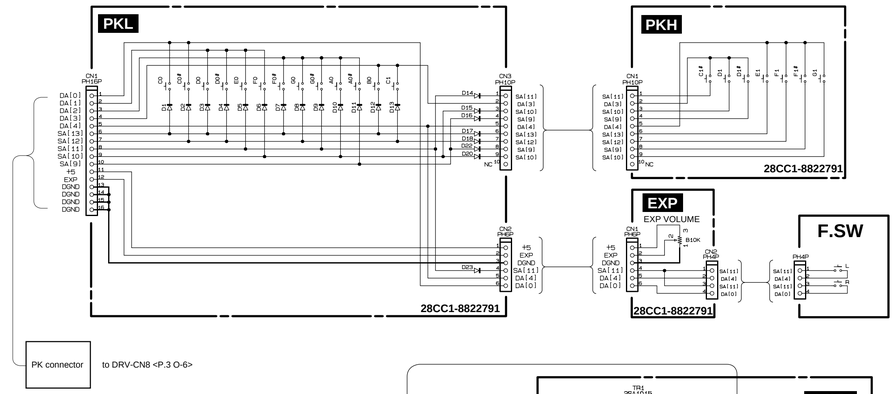

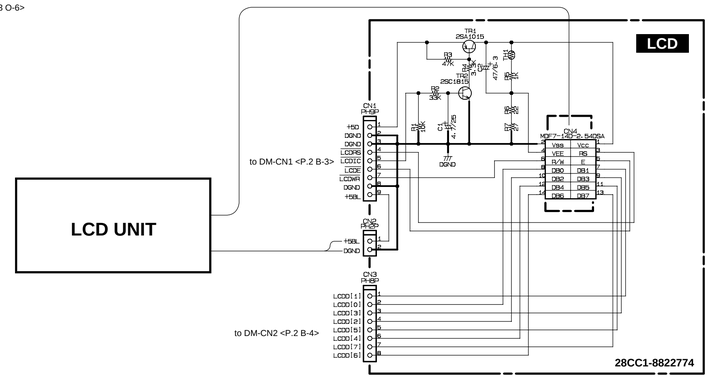

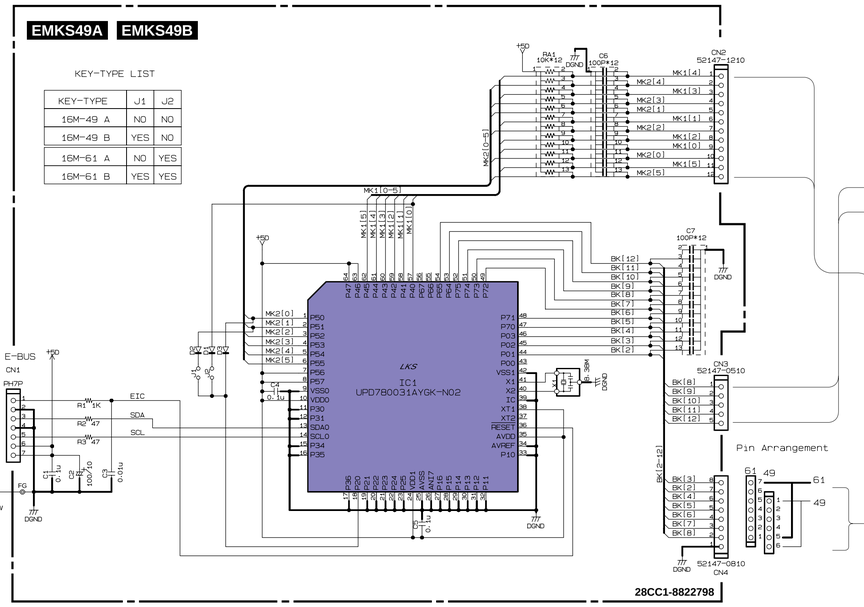

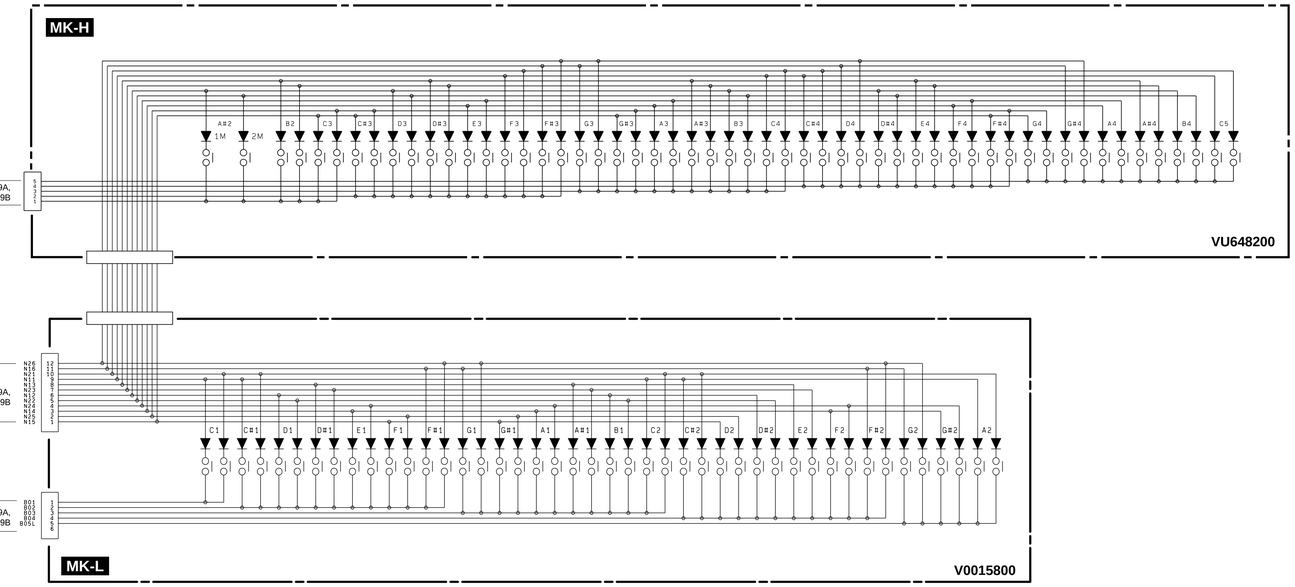

Note: See parts list for details of circuit board component parts.

(±): Ceramic Capacitor

• TAR5S33 (XZ642A00) REGULATOR +3.3V	• NJU7202U50 (X0150A00) REGULATOR +5V	• LMS8117AMP-ADJ (X0609A00) REGULATOR	• D1F60 (VS201100) DIODE	• NJM78M12FA(XJ602A00) REGULATOR +12V	• NJM79M12FA (XD343A00) REGULATOR -12V	• S1NB20 1.0A 200V (VR253700) DIODE STACK	• D5SBA20 (VK421800) DIODE STACK 6.0A 200V
1: OUTPUT 2: COMMON 3: INPUT	1: OUTPUT 2: COMMON 3: INPUT	1: ADJ/GND 2: OUTPUT 3: INPUT	1: ANODE 2: CATHODE	1: OUTPUT 2: COMMON 3: INPUT	1: OUTPUT 2: INPUT 3: COMMON		

• SI-8033S (LF1101) (XZ274A00) REGULATOR +3.3V	• SI-8050S (XT442A00) REGULATOR +5V	• RK46 (V7611000) DIODE	• D3SBA20-4103 (VQ111500) DIODE STACK 4.0A
1: V in 2: SW OUT 3: GND 4: V os 5: S.S	1: V in 2: SW out 3: GND 4: V os 5: S.S	1: ANODE 2: CATHODE	