MICRO COMPONENT SYSTEM RDX-E600

DVD-E600

SERVICE MANUAL

The RDX-E600 is composed of the RX-E600, NX-E400 and the DVD-E600.
This service manual is for the DVD-E600.
For the RX-E600 and the NX-E400 service manual, please refer to the following publication number:

RX-E600/NX-E400 100923

RDX-E600はRX-E600、NX-E400及びDVD-E600で構成されています。
このサービスマニュアルはDVD-E600用です。
RX-E600及びNX-E400のサービスマニュアルは下記を参照してください。

RX-E600/NX-E400 100923

DVD-E600

IMPORTANT NOTICE

This manual has been provided for the use of authorized YAMAHA Retailers and their service personnel.
It has been assumed that basic service procedures inherent to the industry, and more specifically YAMAHA Products, are already known and understood by the users, and have therefore not been restated.

WARNING: Failure to follow appropriate service and safety procedures when servicing this product may result in personal injury, destruction of expensive components, and failure of the product to perform as specified. For these reasons, we advise all YAMAHA product owners that any service required should be performed by an authorized YAMAHA Retailer or the appointed service representative.

IMPORTANT: The presentation or sale of this manual to any individual or firm does not constitute authorization, certification or recognition of any applicable technical capabilities, or establish a principle-agent relationship of any form.

The data provided is believed to be accurate and applicable to the unit(s) indicated on the cover. The research, engineering, and service departments of YAMAHA are continually striving to improve YAMAHA products. Modifications are, therefore, inevitable and specifications are subject to change without notice or obligation to retrofit. Should any discrepancy appear to exist, please contact the distributor's Service Division.

WARNING: Static discharges can destroy expensive components. Discharge any static electricity your body may have accumulated by grounding yourself to the ground buss in the unit (heavy gauge black wires connect to this buss).

IMPORTANT: Turn the unit OFF during disassembly and part replacement. Recheck all work before you apply power to the unit.

■ CONTENTS

TO SERVICE PERSONNEL .....2~5
PREVENTION OF ELECTRO STATIC DISCHARGE 5
LOCALE MANAGEMENT INFORMATION 5
FRONT PANEL 6
REMOTE CONTROL PANEL 6
REAR PANELS .....6~7
SPECIFICATIONS / 参考仕様 7
INTERNAL VIEW 7
DISASSEMBLY PROCEDURES / 分解手順 .....8~9
MAINTENANCE FLOW CHART / メンテナンスフローチャート .....10~17
IC DATA .....18~19
DISPLAY DATA 20
BLOCK DIAGRAM 21
PRINTED CIRCUIT BOARD .....22~26
SCHEMATIC DIAGRAM .....27~35
PIN CONNECTION DIAGRAM 36
PARTS LIST .....36~39

このサービスマニュアルは、エコマーク認定の再生紙を使用しています。
This Service Manual uses recycled paper.

100924

Copyright 2004 YAMAHA CORPORATION□
This manual is copyrighted by YAMAHA and may not be copied or □
redistributed either in print or electronically without permission.□

YAMAHA
YAMAHA CORPORATION
P.O.Box 1, Hamamatsu, Japan
'04.10

■ TO SERVICE PERSONNEL

1. Critical Components Information
   Components having special characteristics are marked ⚠ and must be replaced with parts having specifications equal to those originally installed.
2. Leakage Current Measurement (For 120V Models Only)
   When service has been completed, it is imperative to verify that all exposed conductive surfaces are properly insulated from supply circuits.

- Meter impedance should be equivalent to 1500 ohms shunted by 0.15μF.

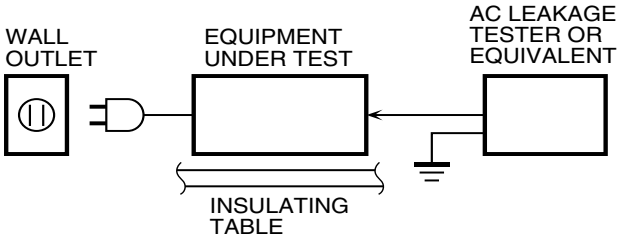

- Leakage current must not exceed 0.5mA.
- Be sure to test for leakage with the AC plug in both polarities.

WARNING: CHEMICAL CONTENT NOTICE!

The solder used in the production of this product contains LEAD. In addition, other electrical/electronic and/or plastic (where applicable) components may also contain traces of chemicals found by the California Health and Welfare Agency (and possibly other entities) to cause cancer and/or birth defects or other reproductive harm.

DO NOT PLACE SOLDER, ELECTRICAL/ELECTRONIC OR PLASTIC COMPONENTS IN YOUR MOUTH FOR ANY REASON WHATSOEVER!

Avoid prolonged, unprotected contact between solder and your skin! When soldering, do not inhale solder fumes or expose eyes to solder/flux vapor!

If you come in contact with solder or components located inside the enclosure of this product, wash your hands before handling food.

About Lead Free Solder / 無鉛ハンダについて

The P.C.B.s installed in this unit are soldered using the following solder.

本機に搭載されている基板のハンダ付けに使用されているハンダは下記の通りです。

	SIDE A / A面	**SIDE B /** B面
OPERATION P.C.B	-	Lead Free Solder / 無鉛ハンダ

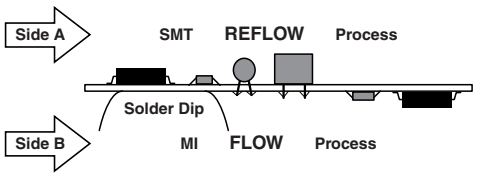

Among some types of lead free solder currently available, it is recommended to use one of the following types for the repair work.

- Sn + Ag + Cu (tin + silver + copper)
- Sn + Cu (tin + copper)
- Sn + Zn + Bi (tin + zinc + bismuth)

Caution:

1. As the melting point temperature of the lead free solder is about 30°C to 40°C (50°F to 70°F) higher than that of the lead solder, be sure to use a soldering iron suitable to each solder.
2. If lead solder must be used, be sure to remove lead free solder from each terminal section of the parts to be replaced and from the area around it completely before soldering, or make sure that the lead free solder and lead solder melt together fully.

無鉛ハンダにはいくつかの種類がありますが、修理時には下記のような無鉛ハンダの使用を推奨します。

- Sn+Ag+Cu（錫+銀+銅）
- Sn+Cu（錫+銅）
- Sn+Zn+Bi（錫+亜鉛+ビスマス）

注意：

1. 無鉛ハンダの融点温度は通常の鉛入りハンダに比べ30～40℃程度高くなっていますので、それぞれのハンダに合ったハンダごてをご使用ください。
2. 鉛入りハンダを使わざるを得ない場合は、あらかじめ交換する部品端子部やその周辺部の無鉛ハンダをすべて取り除くか、あるいは無鉛ハンダと鉛入りハンダが十分に溶けた状態となるようにハンダ付けしてください。

WARNING: Laser Safety

This product contains a laser beam component. This component may emit invisible, as well as visible radiation, which may cause eye damage. To protect your eyes and skin from laser radiation, the following precautions must be used during servicing of the unit.

1) When testing and/or repairing any component within the product, keep your eyes and skin more than 30 cm away from the laser pick-up unit at all times. Do not stare at the laser beam at any time.

2) Do not attempt to readjust, disassemble or repair the laser pick-up, unless noted elsewhere in this manual.

3) CAUTION : Use of controls, adjustments or performance of procedures other than those specified herein may result in hazardous radiation exposure.

警告：レーザーの安全対策

本機はレーザー光線を放射する部品を搭載しています。この部品が放射するレーザー光線は目に損傷を起こします。このレーザー光線から目及び肌を保護するために、本機の修理作業中は下記の注意を厳守してください。

1）テスト時または修理時、目及び肌を光ピックアップから30cm以上離してください。いかなる場合もレーザー光線を見つめないでください。

2）光ピックアップの再調整及び分解はしないでください。

3）このマニュアル上で指定されている以外の制御、調整、手順はレーザー光線を照射される結果を招く恐れがあります。

Laser Emitting conditions:

1) When the Top Cover is removed, and the STANDBY/ON SW is turned to the "ON" position, the laser component will emit a beam for several seconds to detect if a disc is present. During this time (5-10 sec.) the laser may radiate through the lens of the laser pick-up unit. Do not attempt any servicing during this period! If no disc is detected, the laser will stop emitting the beam. When a disc is loaded, you will not be exposed to any laser emissions.

2) The laser power level can be adjusted with the VR on the pick-up PWB, however, this level has been set by the factory prior to shipping from the factory. Do not adjust this laser level control unless instruction is provided elsewhere in this manual. Adjustment of this control can increase the laser emission level from the device.

レーザー放射条件

1）トップカバーを取り外しSTANDBY/ONスイッチをONにすると、ディスク検知のため5～10秒間、光ピックアップからレーザー光線が放射されます。この間、修理はしないでください。
ディスクが検知されなければ、レーザー光線の放射は停止します。ディスクがセットされている場合、ディスクで遮られるのでレーザー光線は修理担当者に届きません。

2）レーザーパワーレベルは光ピックアップ基板上のVRにより調整可能ですが、工場出荷前に調整セット済みなので、このVRは廻さないでください。このVRを廻すと装置からのレーザー光線の放射レベルが上がる恐れがあります。

Laser Diode Properties

Type:	Semiconductor laser GaAlAs
Wave length:	650 nm (DVD) 780 nm (VCD/CD)
Output Power:	7 mW (DVD) 10 mW (VCD/CD)
Beam divergence:	60 degree

レーザー

タイプ	半導体レーザー GaAlAs
波長	650 nm (DVD) 780 nm (VCD/CD)
出力	7 mW (DVD) 10 mW (VCD/CD)
ビーム広がり	60 度

VARO! : AVATTAESSA JA SUOJALUKITUS OHITETTAESSA OLET ALTTIINA NÄKYMÄTTÖMÄLLE LASER-SÄTEILYLLE. ÄLÄ KATSO SÄTEESEEN.

VARNING! : OSYNLIG LASERSTRÅLNING NÄR DENNA DEL ÄR ÖPPNAD OCH SPÄRREN ÄR URKOPPLAD. BETRAKTA EJ STRÅLEN.

WARNING

CAUTION **Use of controls or adjustments or performance of procedures other than those specified herein may result in hazardous radiation exposure.**	**The unit is not disconnected from the AC power source as long as it is connected to the wall outlet,even if this unit itself is turned off.This state is called the standby mode.In this state,this unit is designed to consume a very small quantity of power.**
ATTENTION **L'emploi de commandes, de réglages ou un choix de procédures différents des spécifications de cette brochure peut entraîner une exposition à d'éventuelles radiations pouvant être dangereses.**	**L 'appareil n 'est pas isolé de la source d 'alimentation aussi longtemps qu 'il reste branché sur une prise murale,même lorsqu 'il est éteint.Il est alors dit en mode «Veille ».Dans ce mode, l 'appareil consomme très peu de courant.**
ACHTUNG **Die Verwendung von Bedienungselementen oder Einstellungen oder die Durchführung von Bedienungsvorgängen, die nicht in dieser Anleitung aufgeführt sind, kann zu einem Kontakt mit gefährlichen Laserstrahlen führen.**	**Das Gerät ist nicht vom Netz getrennt, solange der Netzstecker noch mit der Wandsteckdose verbunden ist, selbst wenn das Gerät ausgeschaltet wurde. Dieser Betriebszustand wird als Bereitschaftsmodus bezeichnet. In diesem Zustand nimmt das Gerät eine sehr geringe Menge Strom auf.**
OBSERVERA **Användning av kontroller och justeringar eller genomförande av procedurer andra än de som specificeras i denna bok kan resultera i att du utsätter dig för farlig strålning.**	**Enheten är inte urkopplad från nätet så länge som den är ansluten till vägguttaget även om enheten i sig självt är avstängd. Detta kallas för beredskapsläge och i detta tillstånd konsumerar apparaten minimalt med ström.**
ATTENZIONE **Uso di controlli o regolazioni o procedure non specificamente descritte può causare l'esposizione a radiazioni di livello pericoloso.**	**L'unità non è scollegata dall'impianto elettrico di casa sintanto che rimane collegata ad una presa di corrente anche se è spenta. Questo modo viene chiamato "modo di attesa". In esso, l'unità consuma una quantità molto bassa di energia per mantenere in memoria le impostazioni da voi fatte.**
PRECAUCIÓN **El uso de los controles o los procedimientos de ajuste o utilización diferentes de los especificados en este manual pueden causar una exposición peligrosa a la radiación.**	**Aunque el propio aparato se encuentre apagado, éste no se desconectará de la fuente de CA siempre que se mantenga enchufado a la toma de corriente. Este estado recibe el nombre de "modo de espera". En este estado, este aparato ha sido diseñado para consumir una cantidad muy pequeña de energía.**
VOORZICHTIG **Gebruik van bedieningsorganen of instellingen, of uitvoeren van handelingen anders dan staan beschreven in deze handleiding kunnen leiden tot blootstelling aan gevaarlijke stralen.**	**De stroomtoevoer naar het toestel is niet afgesloten zolang de stekker nog in het stopcontact zit, zelfs niet als het toestel zelf uitgeschakeld is. Deze toestand wordt "standby" (waak- of paraatstand) genoemd. Het toestel is ontworpen om in deze toestand.**

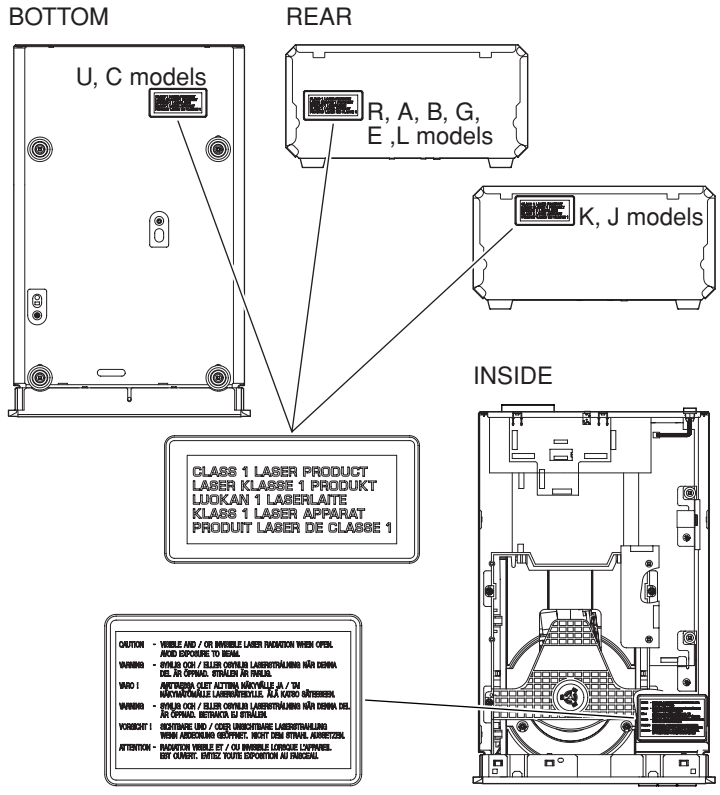

CAUTION VISIBLE AND INVISIBLE LASER RADIATION WHEN OPEN. AVOID EXPOSURE TO BEAM.

ADVARSEL SYNLIG OG USYNLIG LASERSTRÅLING VED ÅBNING. UNDGÅ UDSÆTTELSE FOR STRÅLING.

ADVARSEL SYNLIG OG USYNLIG LASERSTRÅLING NÅR DEKSEL ÅPNES. UNNGÅ EKSPONERING FOR STRÅLEN.

VARNING SYNLIG OCH OSYNLIG LASERSTRÅLNING NÄR DENNA DEL ÄR ÖPPNAD. BETRAKTA EJ STRÅLEN.

VARO! AVATTAESSA OLET ALTTIINA NÄKYVÄLLE JA NÄKYMÄTTÖMÄLLE LASER SÄTEILYLLE. ÄLÄ KATSO SÄTEESEEN.

VORSICHT SICHTBARE UND UNSICHTBARE LASERSTRAHLUNG WENN ABDECKUNG GEÖFFNET. NICHT DEM STRAHL AUSSETSEN.

DANGER VISIBLE AND INVISIBLE LASER RADIATION WHEN OPEN. AVOID DIRECT EXPOSURE TO BEAM.

ATTENTION RAYONNEMENT LASER VISIBLE ET INVISIBLE EN CAS D'OUVERTURE. EXPOSITION DANGEREUSE AU FAISCEAU.

Warning for power supply

The primary side of the power supply carries live mains voltage when the player is connected to the mains even when the player is switched off !

This primary area is not shielded so it is possible to touch copper tracks and/or components when servicing the player.
Service personnel have to take precautions to prevent touching this area or components in this area .
The primary side of the power supply has been indicated with a lightening stroke and a stripe-marked print on the printed wiring board.

Note:

The screws on the DVD mechanism (position 50 in on the exploded view drawing) may never be touched, removed or re-adjusted.

Handle the DVD mechanism with care when the unit has to be exchanged!

The DVD mechanism is very sensitive for dropping or giving shocks.

■ PREVENTION OF ELECTRO STATIC DISCHARGE

The laser diode in the DVD mechanism may be damaged due to static electricity from clothes or the human body. Use caution to prevent electro static damage when servicing or handling the DVD-mechanism.

1. Grounding for electro static damage prevention

Some devices, such as the DVD player, use an optical pickup (laser diode) that will be damaged by static electricity in the working environment. Only attempt service after ensuring that all grounding procedures have been completed.

1. Worktable grounding

   Put a grounded conductive material (sheet) or iron sheet on the area where the optical pickup is placed.

2. Human body grounding

   Use an anti-static wrist strap to discharge the static electricity from your body.

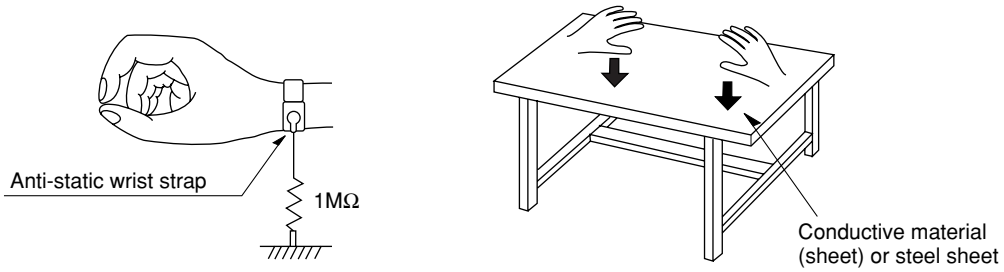

2. Handling Precautions for DVD mechanism

1. Handle the DVD mechanism gently, as it is an extremely high-precision assembly.
2. The flexible cable lines may break if an excessive force is applied to it. Use caution when handling the cable.
3. The semi-fixed resistor for laser power adjustment should not be adjusted. Do not turn the resistor.

■ LOCALE MANAGEMENT INFORMATION

Locale Management Information : This DVD player is designed and manufactured to respond to the Locale Management Information that is recorded on a DVD disc. If the Locale number described on the DVD disc does not correspond to the Locale number of this DVD player, this DVD player cannot play this disc.

This product incorporates copyright protection technology that is protected by method claims of certain U.S. patents and other intellectual property rights owned by Macrovision Corporation and other rights owners. Use of this copyright protection technology must be authorized by Macrovision Corporation, and is intended for home and other limited viewing uses only unless otherwise authorized by Macrovision Corporation. Reverse engineering or disassembly is prohibited.

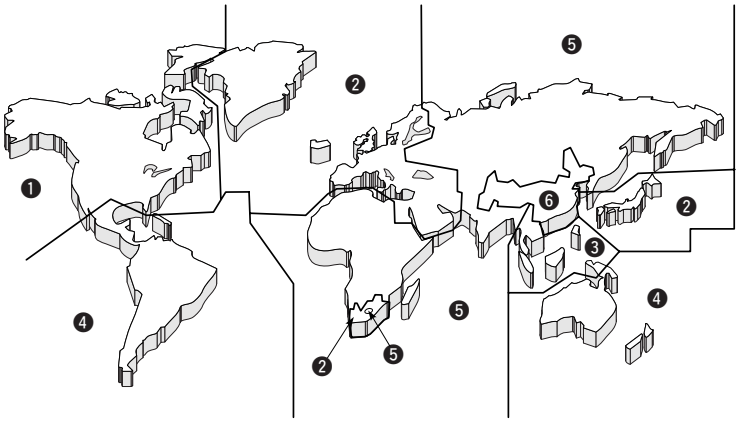

■ FRONT PANEL

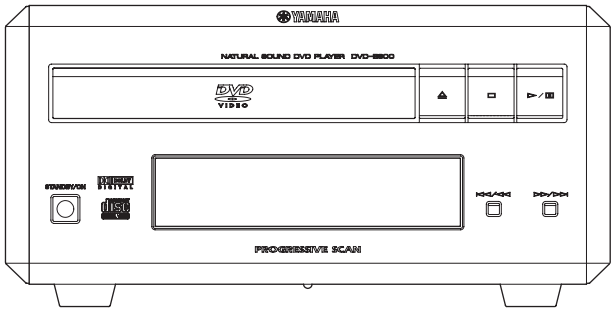

■ REMOTE CONTROL PANEL

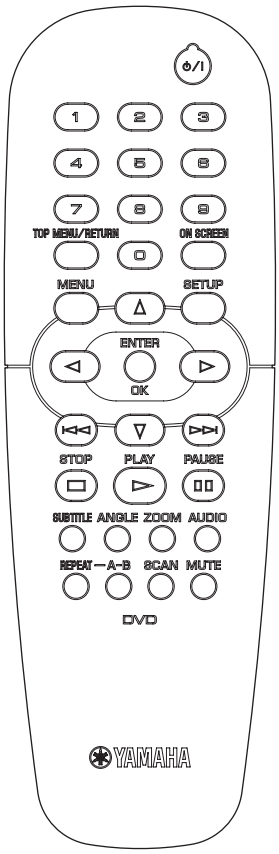

■ REAR PANELS

U, C models

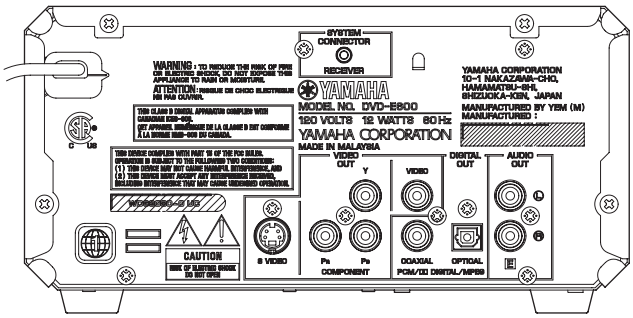

R model

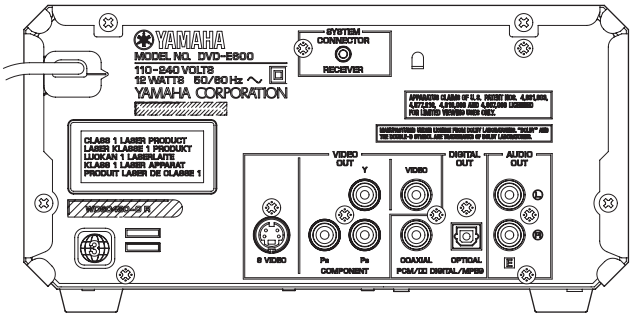

K model

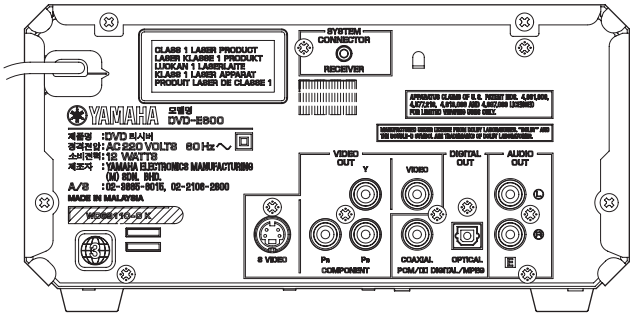

A model

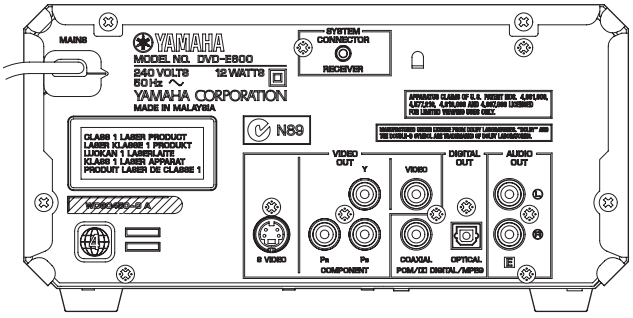

B, G, E models

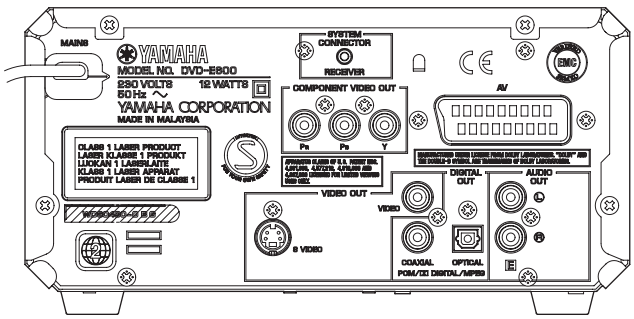

L model

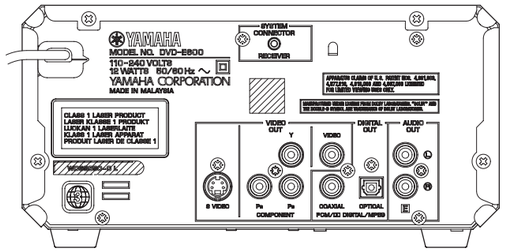

J model

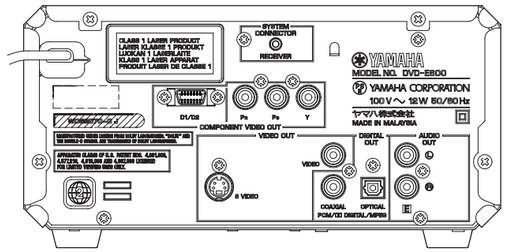

■ SPECIFICATIONS / 参考仕様

PLAYBACK SYSTEM /対応ディスク

DVD Video
Video CD & SVCD
CD
PICTURE CD
CD-R, CD-RW
DVD+R, DVD+RW
DVD-R, DVD-RW

VIDEO PERFORMANCE /ビデオ部

Video (CVBS) Output	1 Vpp into 75 ohms
S-Video Output	Y: 1Vpp into 75 ohms
	C: 0.3Vpp into 75 ohms
Component Video Output	Y: 1Vpp into 75 ohms
	Pb/Cb Pr/Cr: 0.7Vpp into 75 ohms
RGB (SCART) Output	0.7 Vpp into 75 ohms
Black Level Shift	On/Off
Video Shift	Left/Right

AUDIO FORMAT /オーディオフォーマット

Digital	Mpeg/Dolby Digital	Compressed Digital
	PCM	16, 20, 24 bits
		fs, 44.1, 48, 96 kHz
	MP3(ISO 9660)	24, 32, 56, 64, 96, 128, 256 kbps
		fs 16, 22.05, 24, 32, 44.1, 48kHz
Analog Sound Stereo		

AUDIO PERFORMANCE /オーディオ特性

DA Converter	24 bits	
Signal-Noise (1kHz)	105 dB	
Dynamic Range (1kHz)	100 dB	
DVD	fs 96 kHz	2 Hz - 44 kHz
	fs 48 kHz	2 Hz - 22 kHz
SVCD	fs 48 kHz	2 Hz - 22 kHz
	fs 44.1 kHz	2 Hz - 20 kHz
CD/VCD	fs 44.1 kHz	2 Hz - 20 kHz
Distortion and Noise (1kHz)		0.003%

TV STANDARD (PAL/50Hz) (NSCT/60Hz)

Number of lines	625	525
Playback	Multistandard	(PAL/NTSC)

CONNECTIONS /接続端子

Y Output	Cinch (green)
Pb/Cb Output	Cinch (blue)
Pr/Cr Output	Cinch (red)
SCART	Euroconnector (B, G, E models only)
D Terminal	(J model only)
S-Video Output	Mini DIN, 4 pins
Video Output	Cinch
Audio Output (L+R)	Cinch

Digital Output	1 coaxial, 1 optical IEC958 for CDDA / LPCM/ MPEG1 IEC1937 for MPEG 2, Dolby Digital

GENERAL /一般

Dimensions (w x h x d)	217 x 108 x 346
Weight	Approx. 2.5 Kg
Finish	
Gold color	U, C, R, K, A, G, E models
Silver color	U, R, B, G, E, L, J models
Power Supply	
U, C models	AC120V, 60Hz
R, L models	AC110/120/220/230-240V, 50/60Hz
K model	AC220V, 60Hz
A model	AC240V, 50Hz
B, G, E models	AC230V, 50Hz
J model	AC100V, 50/60Hz
Power Consumption	12W
Standby Power Consumption (reference data)	1W

ACCESSORIES /付属品 (RDX-E600)

Remote Control x 1, Battery x 2
System Control Cable x 1, Audio Pin Cable x 1, Video Pin Cable x 1

**** Specifications subject to change without prior notice.***
※ 参考仕様および外観は予告なく変更されることがあります。

U ..... USA model
C ..... Canadian model
R ..... General model
K ..... Korean model
A ..... Australian model
B ..... British model
G ..... European model
E ..... South European model
J ..... Japanese model

DOLBY DIGITAL Manufactured under license from Dolby Laboratories. “Dolby” and the double-D symbol are trademarks of Dolby Laboratories.
ドルビーラボラトリーズからの実施権により製造されています。「ドルビー」及びダブルD 記号は、ドルビーラボラトリーズの商標です。

● **DIMENSIONS /** 寸法図 **(DVD-E600)**

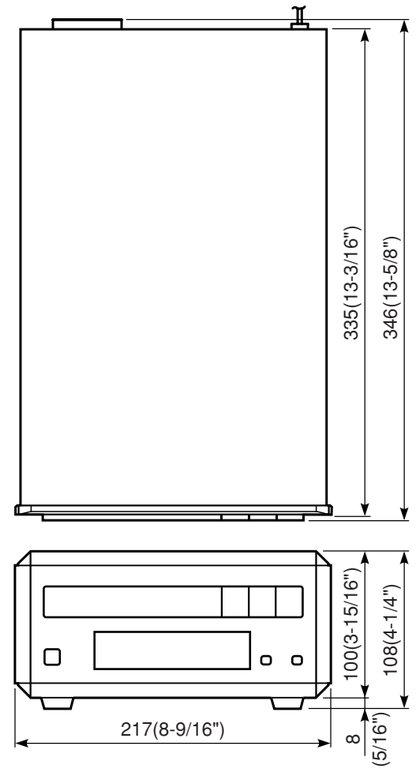

Unit : mm (inch)
単位：mm（インチ）

■ INTERNAL VIEW

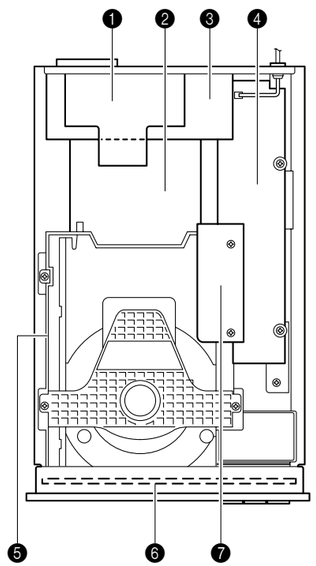

❶ OPERATION (2) P.C.B.
❷ MONO P.C.B.
❸ VIDEO P.C.B. (B, G, E, J models only)
❹ POWER SUPPLY UNIT
❺ DVD MECHANISM UNIT
❻ OPERATION (1) P.C.B.
❼ OPERATION (3) P.C.B.

■ DISASSEMBLY PROCEDURES / 分解手順

(Remove parts in the order as numbered.)
Disconnect the power cable from the AC outlet.

（番号順に部品を取り外してください。）
AC電源コンセントから、電源コードを抜いてください。

1. Removal of Top Cover
a. Remove 4 screws (①), 4 screws (②) in Fig. 1.
b. Slide the Top Cover rearward to remove it.

1. トップカバーの外し方
a. ①のネジ4本、②のネジ4本を外します。(Fig. 1)
b. トップカバーを後方へスライドさせ、取り外します。

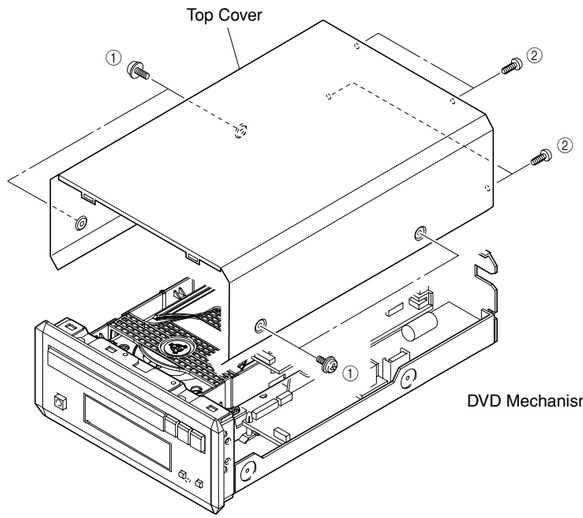

Fig. 1

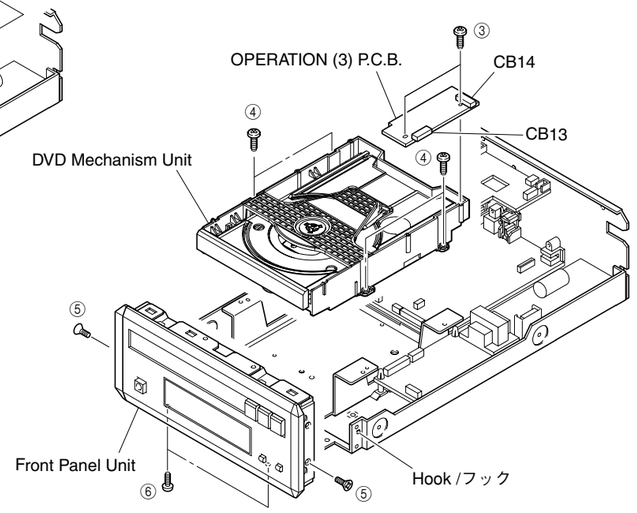

Fig. 2

2. Removal of OPERATION (3) P.C.B. and DVD Mechanism Unit
a. Remove 2 screws (③) in Fig. 2.
b. Remove a connectors (CB13, CB14) in Fig. 2.
c. Remove the OPERATION (3) P.C.B.
d. Remove 4 screws (④) in Fig. 2.
e. Remove a connector (CB12) in Fig. 3.
f. Remove the DVD Mechanism Unit back ward.

2. OPERATION (3) P.C.B.、DVDメカユニットの外し方
a. ③のネジ2本を外します。(Fig. 2)
b. コネクター CB13、CB14を外します。(Fig. 2)
c. OPERATION (3) P.C.B.を取り外します。
d. ④のネジ4本を外します。(Fig. 2)
e. コネクター CB12を外します。(Fig. 3)
f. DVDメカユニットを持ち上げながら後方へ取り外します。

3. Removal of Front Panel Unit
a. Remove 2 screws (⑤), 2 screws (⑥) in Fig. 2.
b. Remove a connectors (CB5, 0203, 1608, 1622) in Fig. 3.
c. Release 2 hooks and remove the Front Panel Unit by pulling it forward.

3. フロントパネルユニットの外し方
a. ⑤のネジ2本、⑥のネジ2本を外します。(Fig. 2)
b. コネクター CB5、0203、1608、1622を外します。(Fig. 3)
c. パネル両サイドのフックを外して、フロントパネルユニットを前方に引き出します。

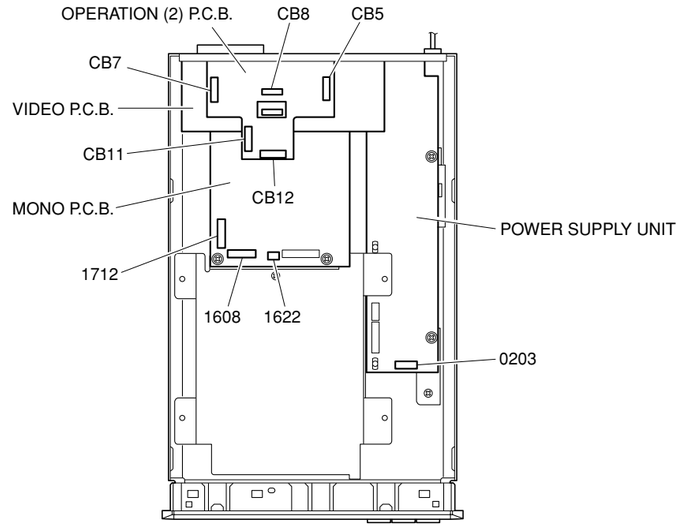

Fig. 3

4. Removal of OPERATION (2) P.C.B.
a. Remove 2 screws (⑦) in Fig. 4.
b. Remove a connectors (1712, CB7, CB8, CB11) in Fig. 3.
c. Remove the OPERATION (2) P.C.B.

4. OPERATION (2) P.C.B.の外し方
a. ⑦のネジ2本を外します。(Fig. 4)
b. コネクター 1712、CB7、CB8、CB11を外します。(Fig. 3)
c. OPERATION (2) P.C.B.を取り外します。

5. Removal of VIDEO P.C.B. (B, G, E models only)
a. Remove 4 screws (⑧) in Fig. 4.
b. Remove the VIDEO P.C.B.

5. VIDEO P.C.B.の外し方
a. ⑧のネジ4本を外します。(Fig. 4)
b. VIDEO P.C.Bを取り外します。

6. Removal of MONO P.C.B.
a. Remove 5 (U, C, R, K, A, L models) / 4 (B, G, E models) screws (⑨) in Fig. 4.
b. Remove 2 screws (⑩) in Fig. 5.
c. Remove a connector (1601) in Fig. 5.
d. Remove the MONO P.C.B.

6. MONO P.C.B.の外し方
a. ⑨のネジ4本を外します。(Fig. 4)
b. ⑩のネジ2本を外します。(Fig. 5)
c. コネクター 1601を外します。(Fig. 5)
d. MONO P.C.B.を取り外します。

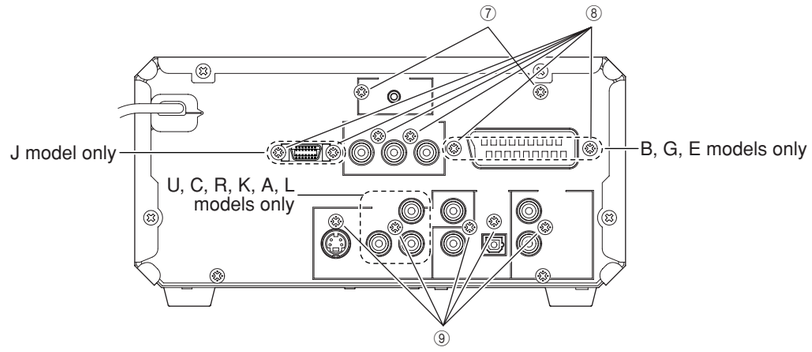

Fig. 4

7. Removal of POWER SUPPLY UNIT

a. Remove 2 screws (⑪) in Fig. 5.
b. Loosen 2 spacers in Fig. 5.
c. Remove a connector (0100) in Fig. 5.
d. Remove the POWER SUPPLY UNIT.

7. POWER SUPPLY UNITの外し方

a. ⑪のネジ2本を外します。(Fig. 5)
b. スペーサー2個をゆるめます。(Fig. 5)
c. コネクター 0100を外します。(Fig. 5)
d. POWER SUPPLY UNITを取り外します。

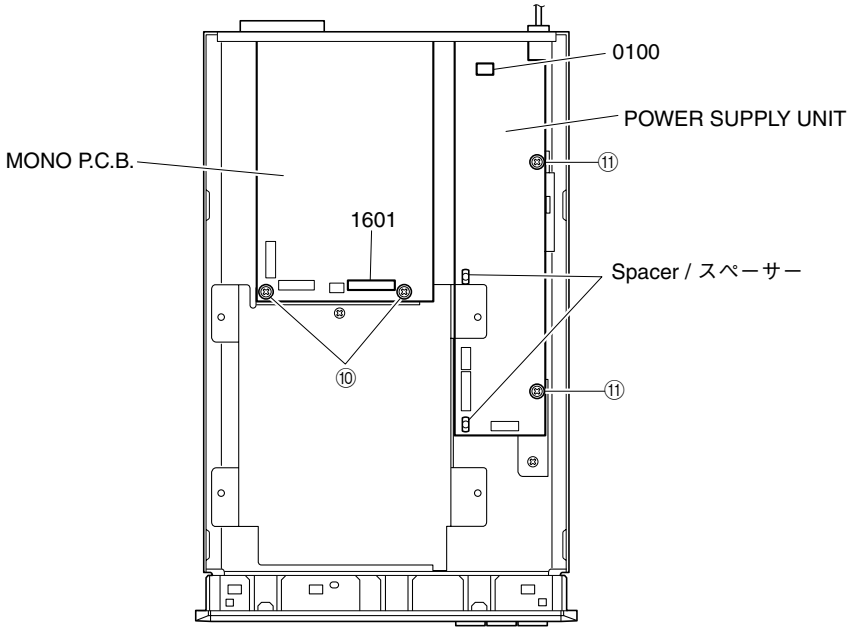

Fig. 5

When checking the P.C.B.

- Reconnect all cables (connectors) that have been disconnected.
- When connecting the flat cable, use care for the polarity.

P.C.B. チェックをする場合には

- 外したケーブル(コネクター)をすべて接続してください。
- フラットケーブルを接続する際、極性に注意してください。

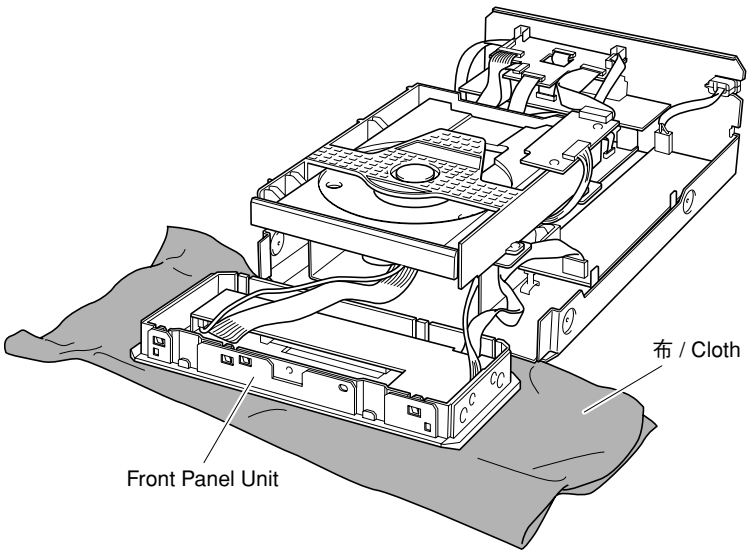

Fig. 6

■ MAINTENANCE FLOW CHART

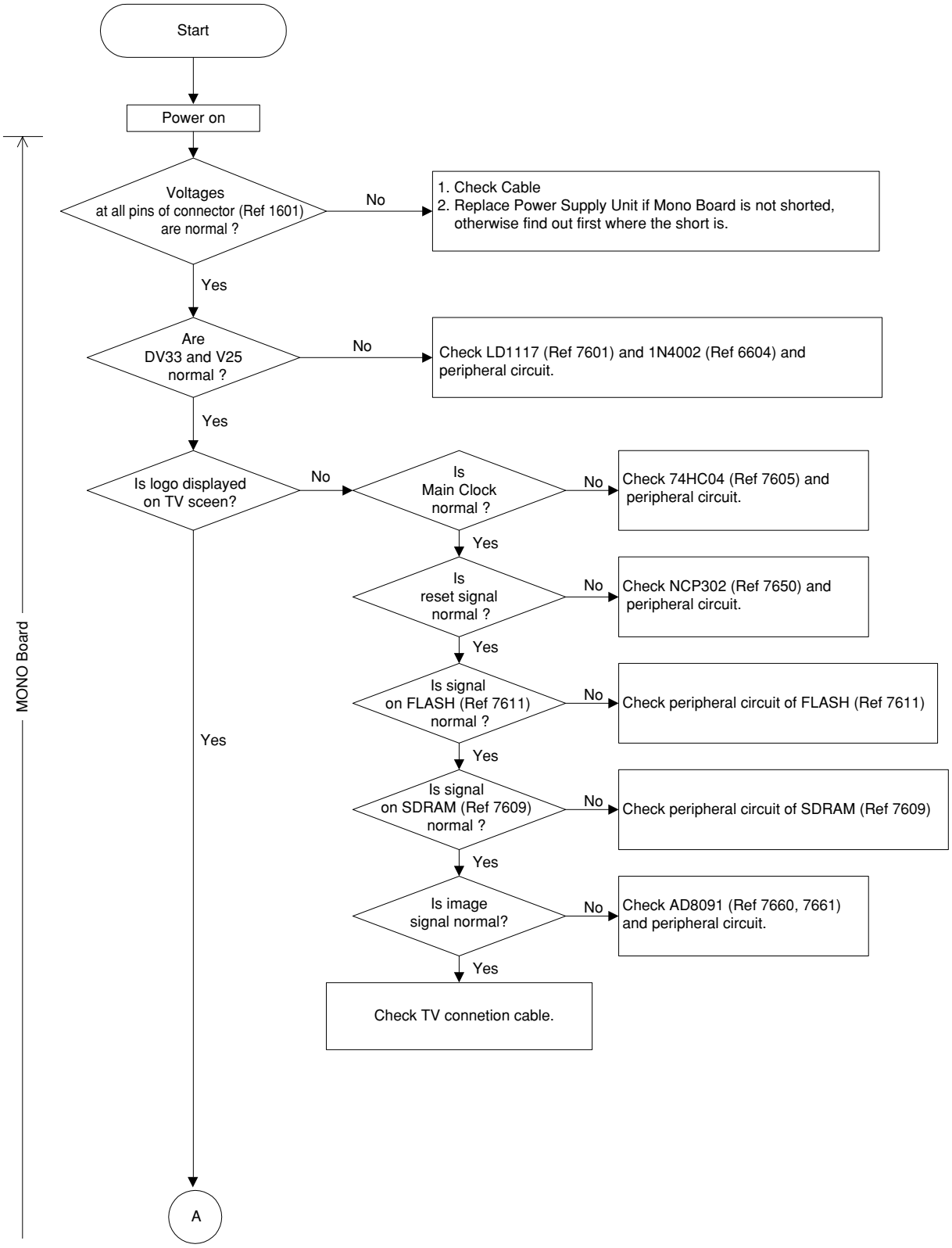

■ メンテナンスフローチャート

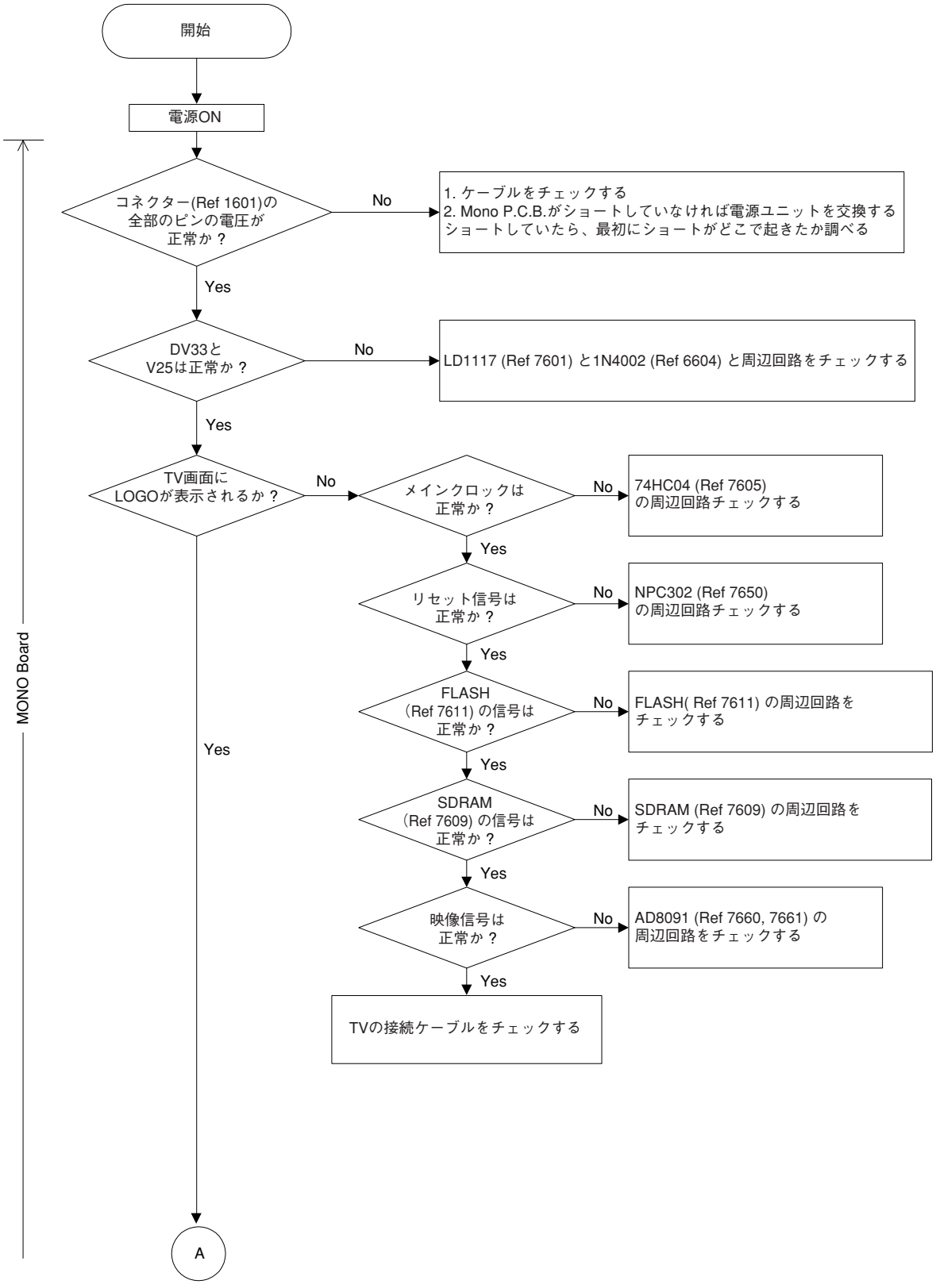

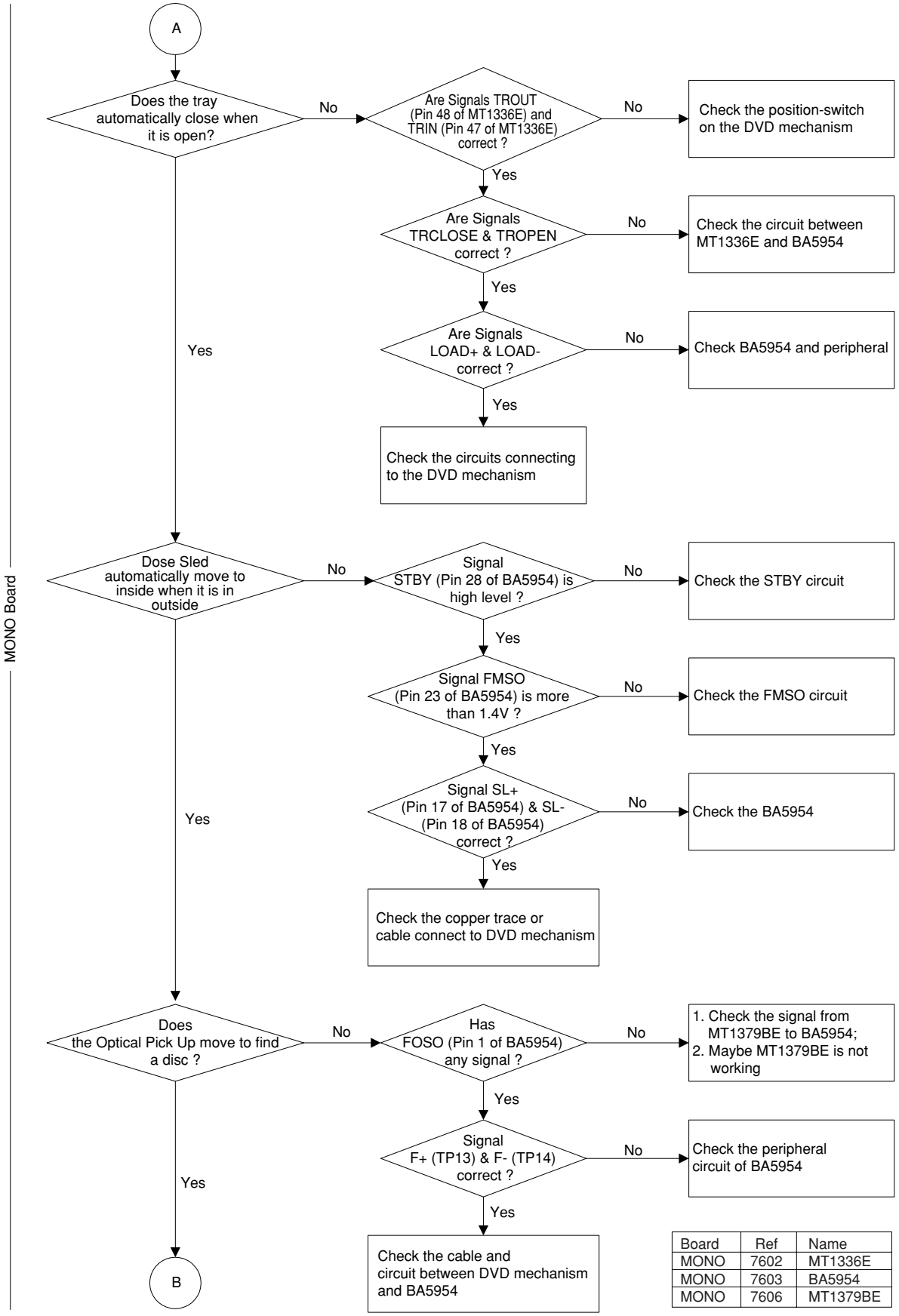

Board	Ref	Name
MONO	7602	MT1336E
MONO	7603	BA5954
MONO	7606	MT1379BE

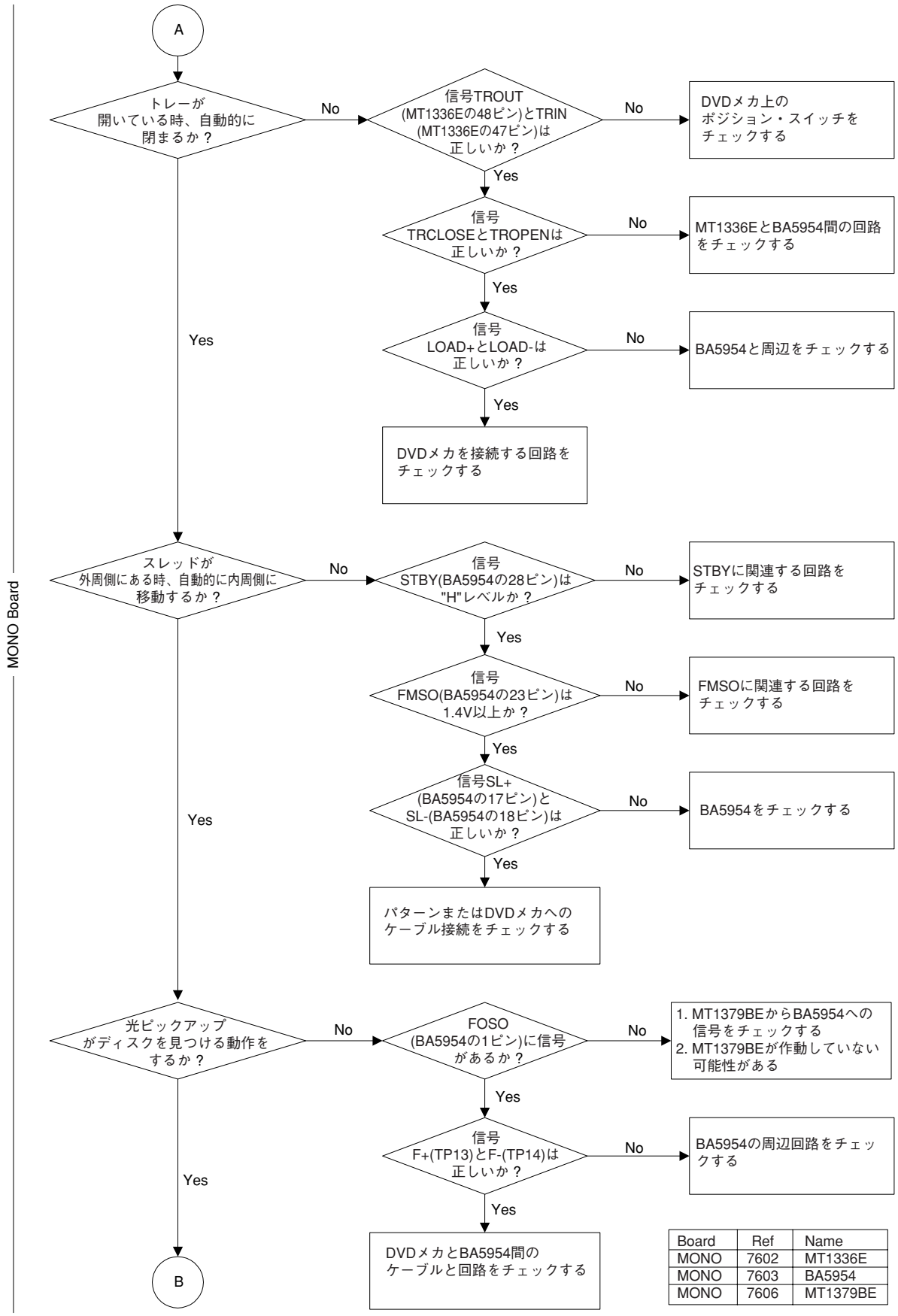

Board	Ref	Name
MONO	7602	MT1336E
MONO	7603	BA5954
MONO	7606	MT1379BE

MONO Board

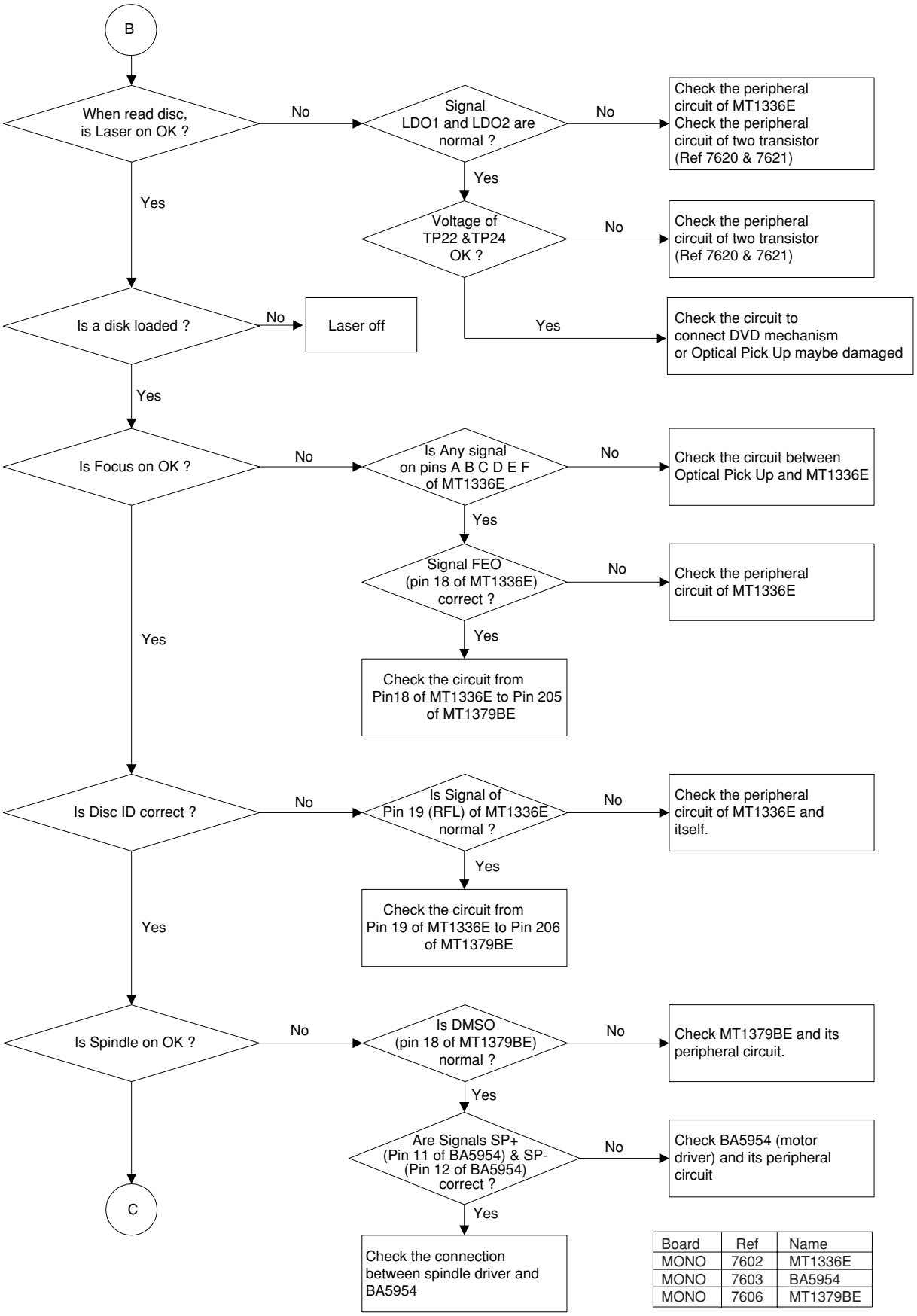

Board	Ref	Name
MONO	7602	MT1336E
MONO	7603	BA5954
MONO	7606	MT1379BE

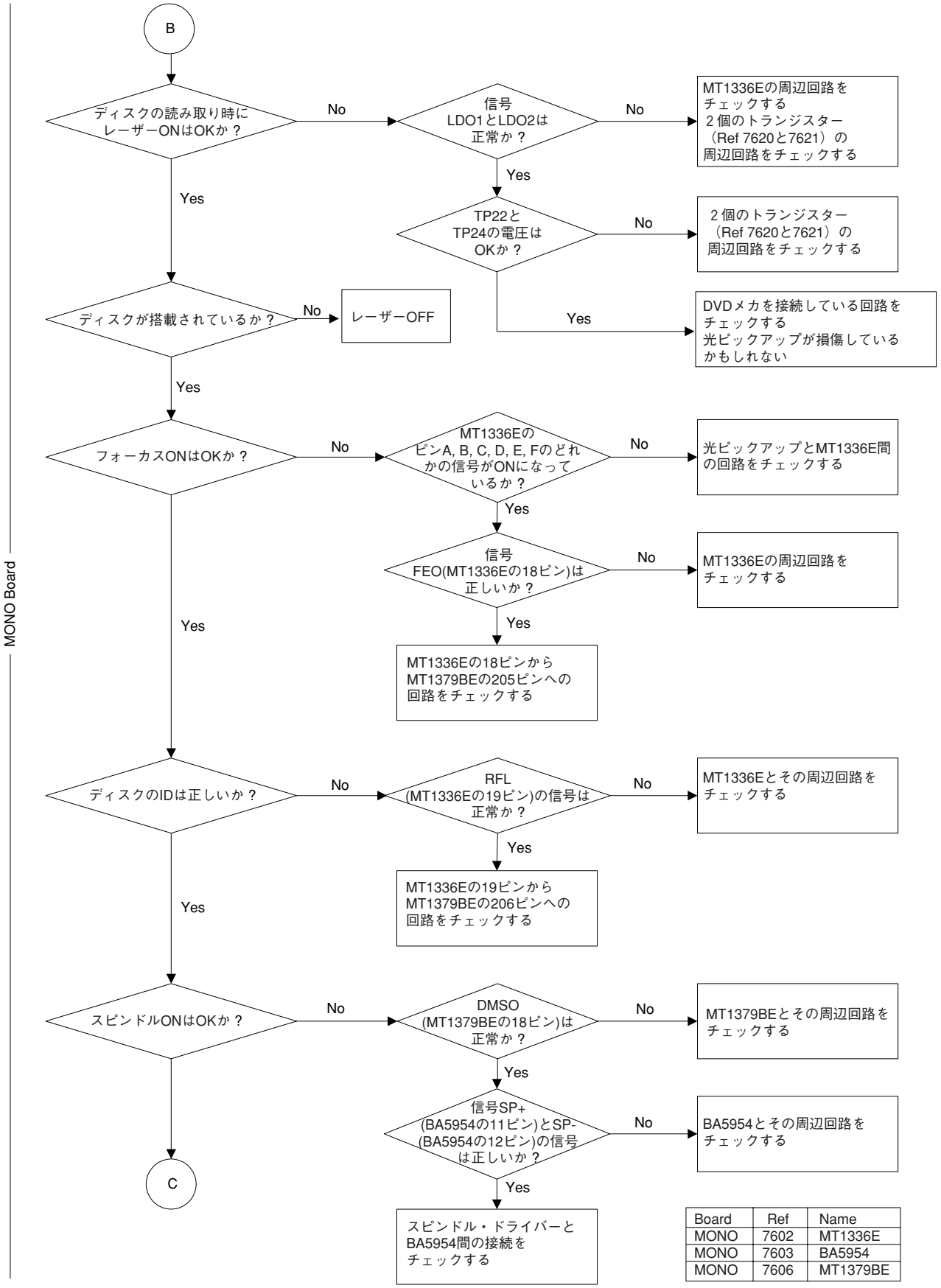

Board	Ref	Name
MONO	7602	MT1336E
MONO	7603	BA5954
MONO	7606	MT1379BE

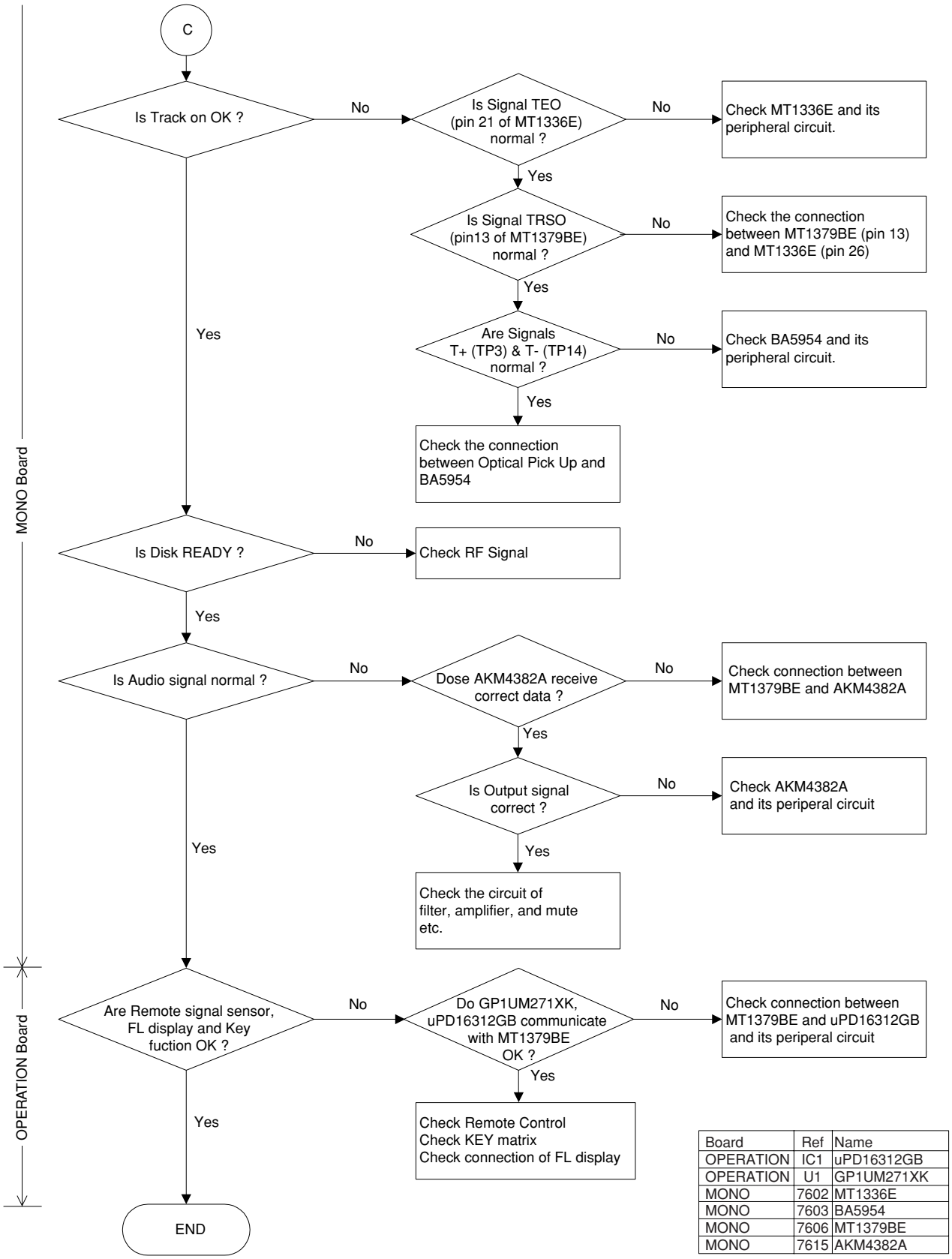

Board	Ref	Name
OPERATION	IC1	uPD16312GB
OPERATION	U1	GP1UM271XK
MONO	7602	MT1336E
MONO	7603	BA5954
MONO	7606	MT1379BE
MONO	7615	AKM4382A

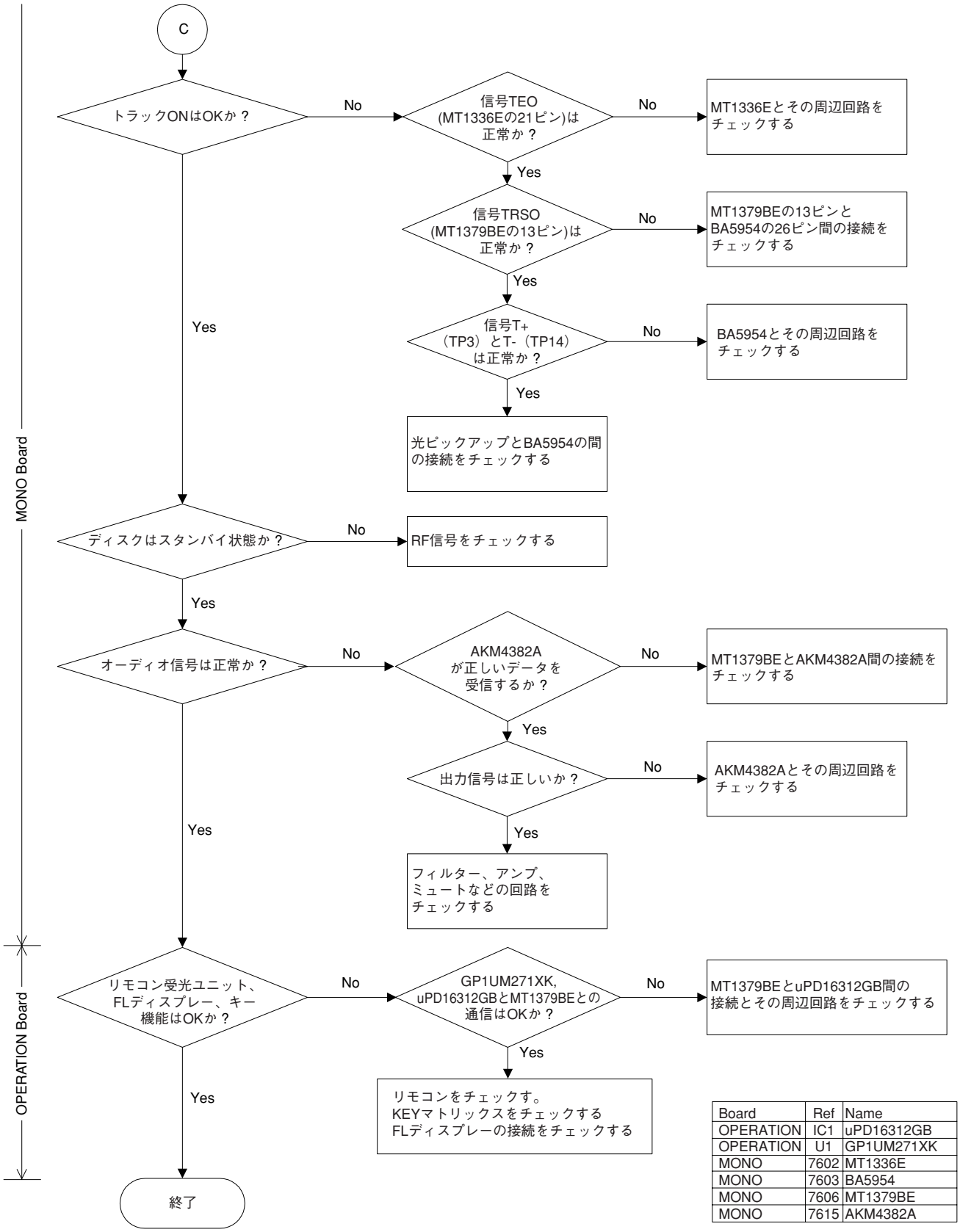

Board	Ref	Name
OPERATION	IC1	uPD16312GB
OPERATION	U1	GP1UM271XK
MONO	7602	MT1336E
MONO	7603	BA5954
MONO	7606	MT1379BE
MONO	7615	AKM4382A

■ IC DATA

IC1 : µPD16312GB-3B4 (OPERATION P.C.B.)
8bit CPU

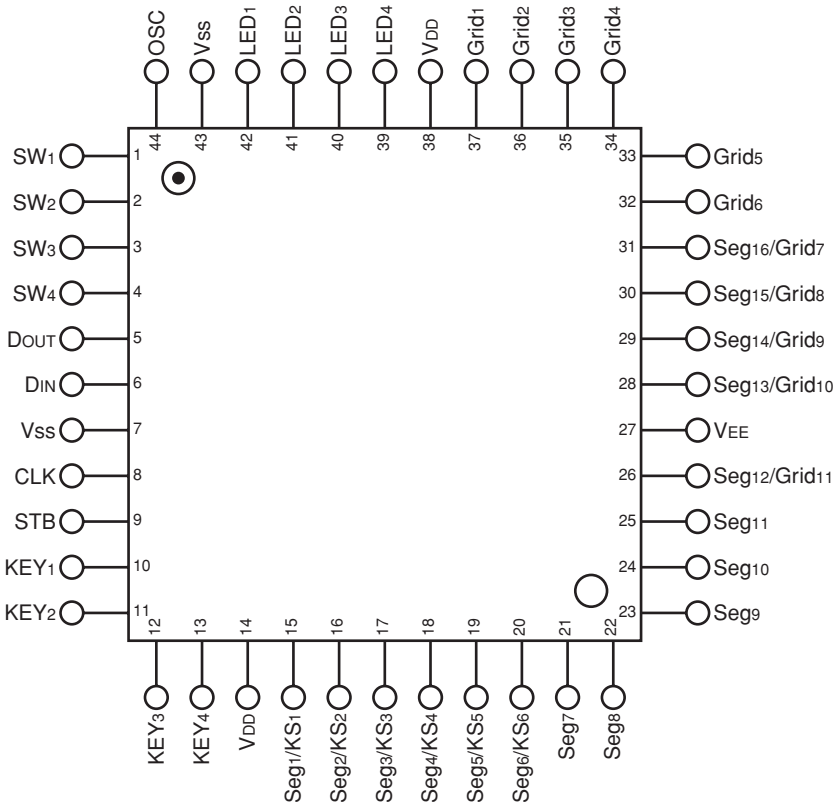

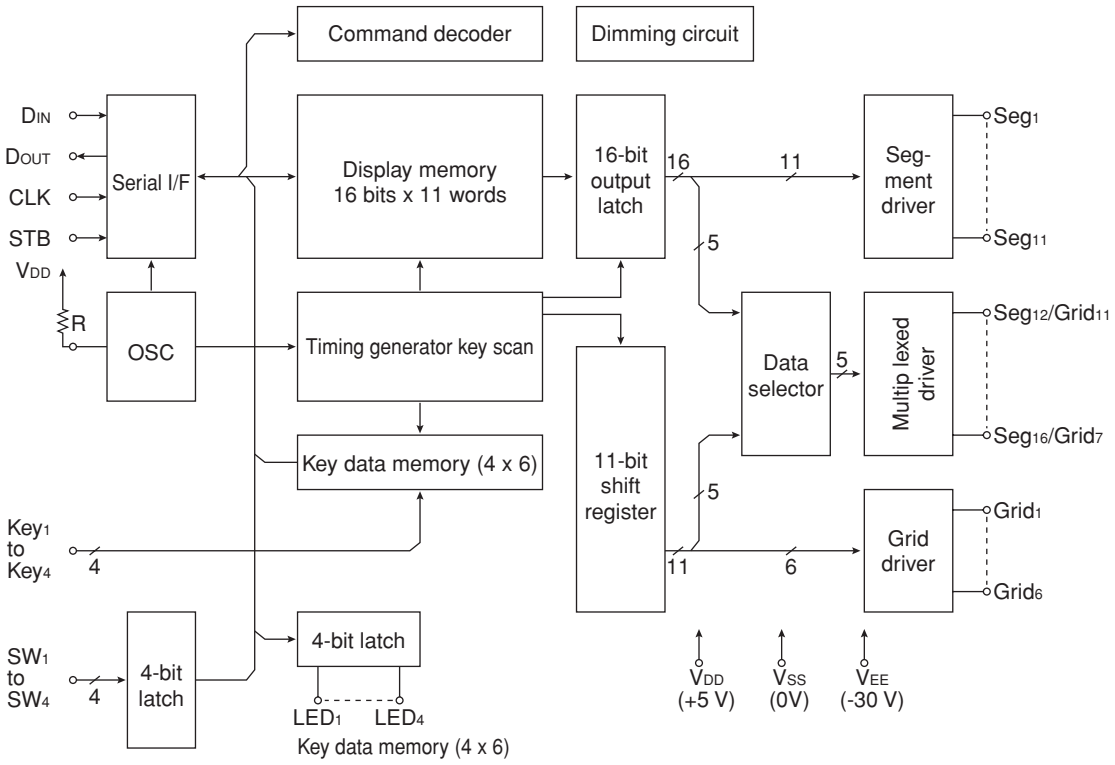

IC1 : μPD16312GB-3B4 (OPERATION P.C.B.)

8bit CPU

No.	Name	Symbol	Description
1	Switch input	SW1	These pins constitute a 4-bit general-purpose input port.
2		SW2	
3		SW3	
4		SW4	
5	Data output	DOUT	Output serial data at the falling edge of the shift clock, starting from low order bit. This is N-ch open-drain output pin.
6	Data input	DIN	Input serial data at rising edge of shift clock, starting from the low order bit.
7	Logic ground	VSS	Connect this pin to system GND.
8	Clock input	CLK	Reads serial data at the rising edge, and outputs data at the falling edge.
9	Strobe	STB	Initializes serial interface at the rising or falling edge of the uPD16312. It then waits for reception of a command. Data input after STB has fallen is processed as a command. While command data is processed, current processing is stopped, and the serial interface is initialized. While STB is high, CLK is ignored.
10	Key data input	KEY1	Data input to these pins is latched at the end of the display cycle.
11		KEY2	
12		KEY3	
13		KEY4	
14	Logic power	VDD	5 V ± 10 %
15	High-voltage output	Seg1/KS1	Segment output pins (Dual function as key source)
16		Seg2/KS2	
17		Seg3/KS3	
18		Seg4/KS4	
19		Seg5/KS5	
20		Seg6/KS6	
21	High-voltage output (segment)	Seg7	Segment output pins
22		Seg8	
23		Seg9	
24		Seg10	
25		Seg11	
26	High-voltage output (segment/grid)	Seg12/Grid11	These pins are selectable for segment or grid driving.
27	Pull-down level	VEE	VDD - 35 V max.
28	High-voltage output (segment/grid)	Seg13/Grid10	These pins are selectable for segment or grid driving.
29		Seg14/Grid9	
30		Seg15/Grid8	
31		Seg16/Grid7	
32	High-voltage output (grid)	Grid6	Grid output pins
33		Grid5	
34		Grid4	
35		Grid3	
36		Grid2	
37		Grid1	
38	Logic power	VDD	5 V ± 10 %
39	LED output	LED4	CMOS output. +20 mA max.
40		LED3	
41		LED2	
42		LED1	
43	Logic ground	VSS	Connect this pin to system GND.
44	Oscillator pin	OSC	Connect resistor to this pin to determine the oscillation frequency to this pin.

■ DISPLAY DATA

● **V1 : 7-BT-299GNK (WD602800)**

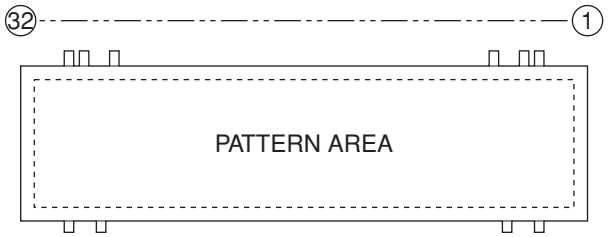

● **PIN CONNECTION**

PIN NO.	32	31	30	29	28	27	26	25	24	23	22	21	20	19	18	17	16	15	14	13	12	11	10	9	8	7	6	5	4	3	2	1
CONNECTION	F2	F2	NP	1G	2G	3G	4G	5G	6G	7G	NP	NP	NP	NP	P15	P14	P13	P12	P11	P10	P9	P8	P7	P6	P5	P4	P3	P2	P1	NP	F1	F1

NOTE : 1) F1, F2 ..... Filament 2) NP ..... No pin 3) 1G ~ 7G ..... Grid

● **GRIG ASSIGNMENT**

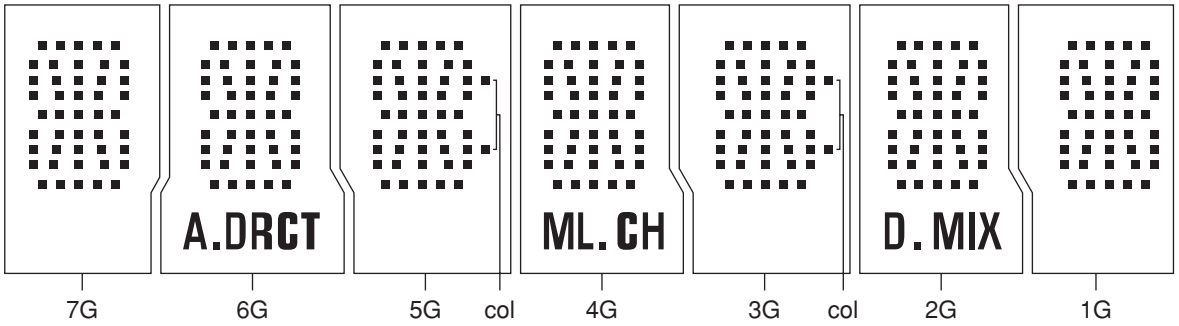

● **ANODE CONNECTION**

	7G	6G	5G	4G	3G	2G	1G
P1	a						
P2	j						
P3	h						
P4	k						
P5	b						
P6	f						
P7	m						
P8	g						
P9	c						
P10	e						
P11	r						
P12	n						
P13	d						
P14	-	A.DRCT	col	ML.CH	col	D.MIX	-
P15	p						

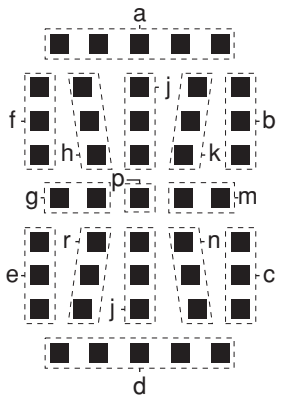

■ BLOCK DIAGRAM

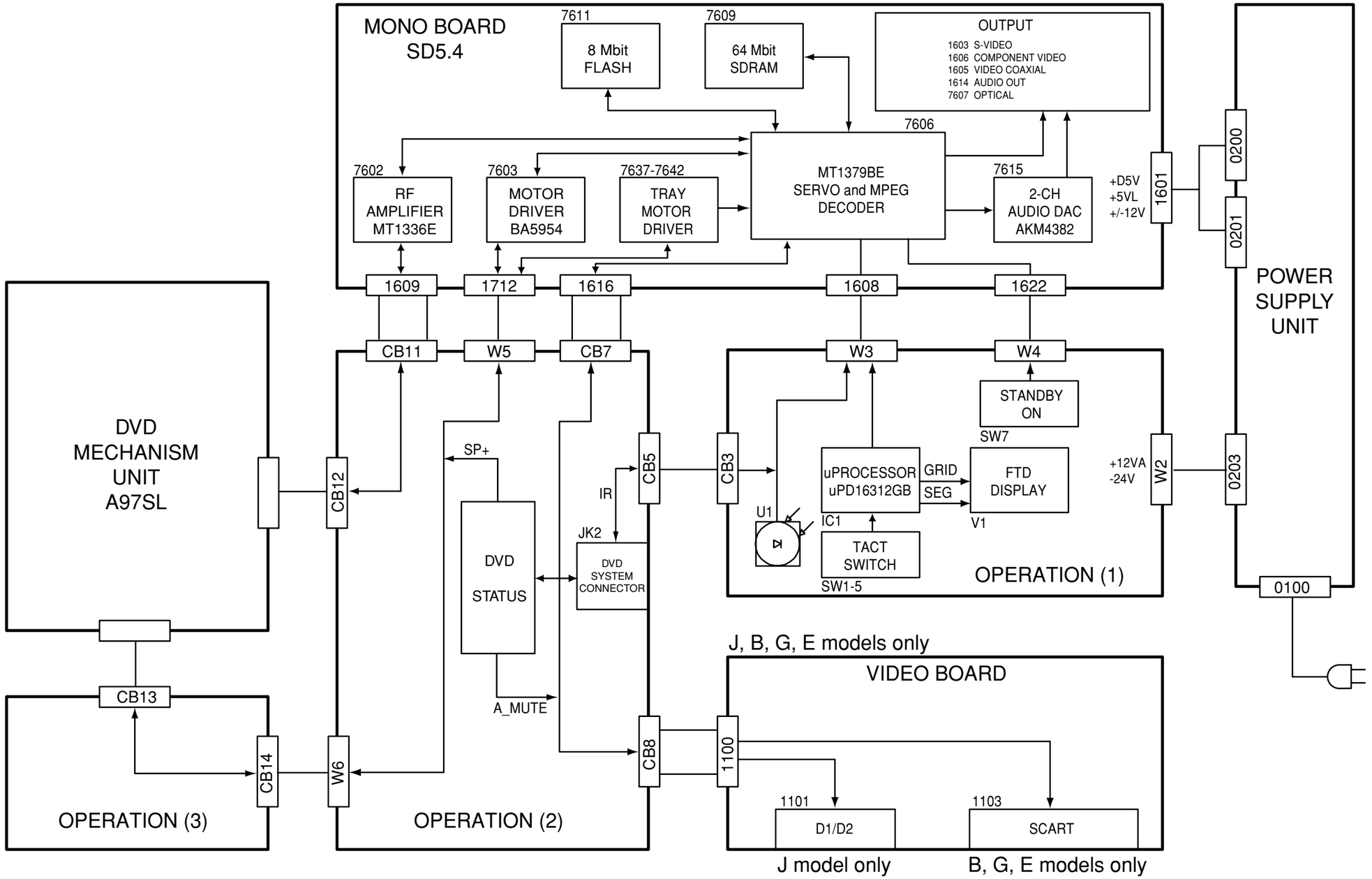

■ PRINTED CIRCUIT BOARD

FOR INFORMATION ONLY (NO SERVICE PARTS WILL BE AVAILABLE)

SD5.4 MONO **(SIDE A)**

The first digit of a component indicates the component type.

1xxx : Connector 3xxx : Resistor 5xxx : Coil 7xxx : IC, Transistor, FET
2xxx : Capacitor 4xxx : SMD jumper 6xxx : Diode 9xxx : Wire jumper

1601 C8 2603 B8 2618 C3 2632 C4 2646 D5 2661 B4 2677 D7 2695 C6 2714 B7 2735 A4 2763 D3 2781 A7 2798 D2 2816 A3 3653 B4 3725 E2 5609 E5 7620 E5
1603 A1 2605 C8 2619 C4 2633 D5 2647 D5 2662 C5 2678 D6 2696 B6 2715 C7 2744 A3 2764 C2 2782 C3 2799 D2 2818 E8 3655 C5 3726 D8 5610 B6 7621 E5
1604 C7 2606 B5 2620 C4 2634 D5 2648 E7 2663 C5 2679 E7 2697 C5 2717 B6 2745 B3 2765 E2 2783 C7 2800 C7 2819 D8 3656 C7 3727 D2 5613 B6 7625 B3
1605 C1 2607 D3 2621 C4 2635 C4 2649 E3 2664 C5 2680 D6 2698 C5 2720 C6 2747 A4 2767 D2 2784 D3 2802 E8 2820 D8 3657 C7 3728 D2 5614 B8 7626 A3
1606 B1 2608 B5 2622 C3 2636 E4 2651 E7 2665 C5 2681 E7 2699 B5 2721 B2 2748 A3 2769 E2 2785 B8 2803 E4 2821 E2 3658 D5 3729 D2 5615 B2 7628 E2
1607 C2 2609 E5 2623 C4 2637 E4 2652 D2 2666 D5 2682 B5 2700 B6 2722 B2 2749 C2 2770 D2 2786 D5 2804 B4 2822 B3 3659 C5 3731 E2 5616 B2 7629 E2
1608 E8 2610 C3 2624 E4 2638 E4 2653 C3 2667 D5 2683 B6 2701 B6 2723 B2 2751 D2 2771 E5 2788 D4 2805 E3 2823 C8 3660 B5 3732 A5 5617 B2 7630 E3
1609 E4 2611 E3 2625 D5 2639 E4 2654 C4 2668 D5 2686 B6 2702 B6 2724 B2 2752 A4 2772 E4 2789 D3 2806 E2 3602 A5 3661 D5 3733 E3 5618 A4 7631 E3
1610 C2 2612 D3 2626 E4 2640 E4 2655 C4 2669 D5 2687 C6 2703 C7 2725 B2 2753 A3 2773 E4 2790 E7 2807 C3 3603 B5 3662 D6 3734 E3 5620 B3 7632 E3
1614 E1 2613 E4 2627 E4 2641 C4 2656 C4 2670 D5 2690 D8 2704 C6 2726 B2 2754 D2 2774 E6 2791 D5 2809 B4 3604 B4 3663 D7 3735 E3 5621 A3 7633 A7
1616 A2 2614 E3 2628 C4 2642 D5 2657 B4 2671 D5 2691 C7 2710 C7 2728 B2 2755 D1 2775 D7 2793 B7 2810 A2 3605 A4 3664 E7 3736 E3 5622 A3 7634 A7
1622 C8 2615 D3 2629 C4 2643 E7 2658 B4 2672 D5 2692 C6 2711 B7 2730 B2 2758 E3 2776 D6 2795 E2 2811 B5 3607 B4 3665 D6 3737 D8 5623 E2 7637 E7
1712 E8 2616 C3 2630 C4 2644 E6 2659 C5 2673 D5 2693 B5 2712 A7 2731 B2 2760 D3 2778 A4 2796 D2 2812 D6 3608 E2 3666 C2 3739 E8 5624 D2 7638 E7
2601 A4 2617 C3 2631 C4 2645 D5 2660 C4 2676 D5 2694 C6 2713 B7 2734 A3 2762 E2 2779 A5 2797 E2 2813 D8 3609 A4 3667 D7 3740 B5 5625 D5 7639 E7
3610 A4 3668 E8 3741 D8 5626 C6 7640 D7
3611 C3 3669 C6 3742 E2 5627 B8 7641 D7
3612 E5 3670 D8 3743 E2 5628 B4 7642 D8
3613 D5 3671 B6 3744 A7 5701 B4 7643 A2
3614 D3 3672 B6 3746 D7 6601 A4 7644 A2
3615 C3 3673 B6 3747 A7 6602 A4
3616 E7 3674 B6 3755 B3 6603 A5
3617 D7 3675 B7 3756 B3 6604 C7
3618 D2 3676 C7 3758 C2 6605 C3
3619 C3 3680 D7 3759 C2 6606 B2
3620 D3 3681 B2 3760 E7 6607 B2
3621 D3 3683 B2 3761 D7 6608 B2
3622 C3 3684 B2 3763 A2 6609 B2
3623 B3 3686 B2 3765 A2 6610 B2
3624 B3 3688 B2 3766 A2 6611 B2
3625 C3 3690 B2 3768 A2 6612 B2
3626 C4 3697 B3 3769 A2 6613 B2
3629 E5 3699 B3 3770 A2 6614 A2
3630 E5 3700 A3 3771 E7 6615 A1
3631 E7 3702 A4 3773 C6 6616 A2
3632 E7 3703 D2 3801 B3 6617 A2
3633 E6 3704 C2 3802 A3 6620 A4
3634 E6 3705 A3 3808 D7 6621 A4
3635 E6 3707 A4 3809 B4 6622 A5
3636 E6 3708 D2 3810 E2 6623 A5
3637 D5 3710 D3 3811 A7 7601 D8
3638 E7 3711 E3 3812 E5 7602 D4
3639 E6 3712 D3 3813 E5 7603 D6
3640 E3 3713 E2 3814 D8 7605 B4
3642 E5 3714 A7 3815 C8 7606 C5
3643 E5 3715 D3 3818 E7 7607 D1
3644 E5 3716 D3 3820 B3 7609 B7
3645 E5 3717 D3 3821 B3 7610 C7
3646 E7 3718 A7 5602 D8 7611 D7
3647 D7 3719 D2 5603 D3 7613 E2
3648 C4 3720 E2 5604 E5 7614 C2
3649 C5 3721 C2 5605 D5 7615 C2
3650 C3 3722 D2 5606 C3 7616 A5
3651 B4 3723 C2 5607 E5 7617 A4
3652 C4 3724 C2 5608 E5 7618 A4

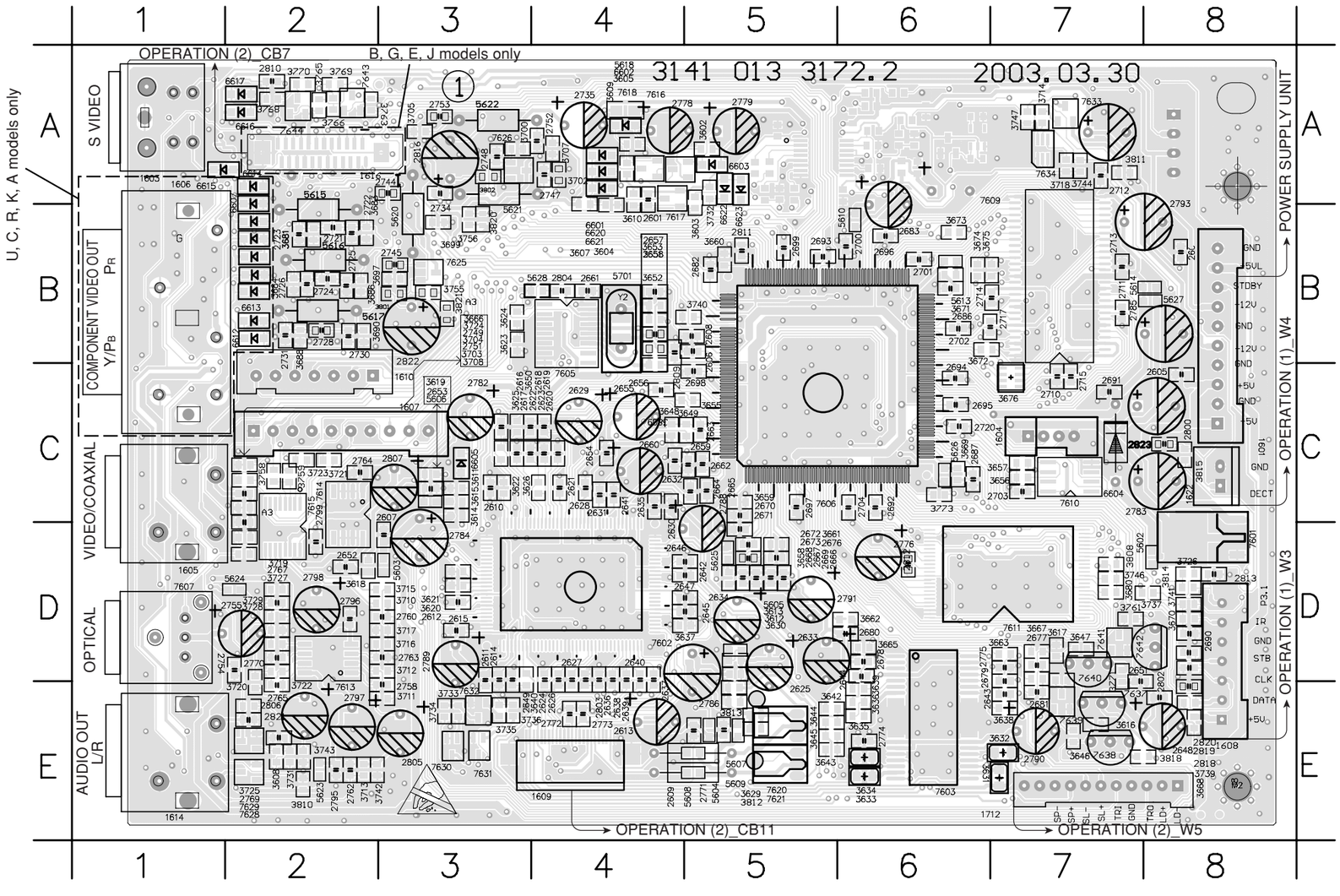

■ PRINTED CIRCUIT BOARD

FOR INFORMATION ONLY (NO SERVICE PARTS WILL BE AVAILABLE)

SD5.4 MONO **(SIDE B)**

The first digit of a component indicates the component type.

1xxx : Connector 3xxx : Resistor 5xxx : Coil 7xxx : IC, Transistor, FET
2xxx : Capacitor 4xxx : SMD jumper 6xxx : Diode 9xxx : Wire jumper

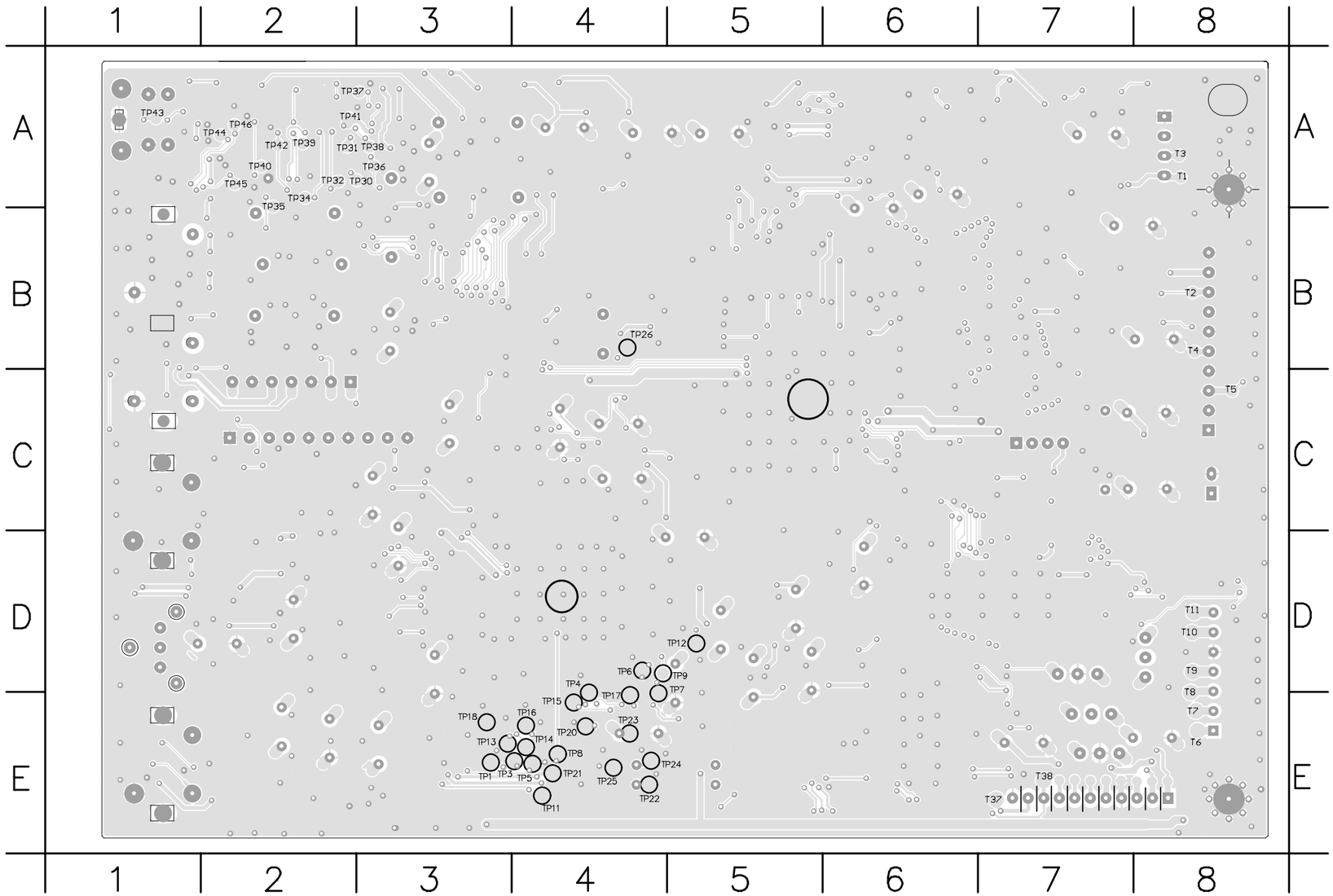

TP1	E3	TP41	A2
TP3	E4	TP42	A2
TP4	E4	TP43	A1
TP5	E4	TP44	A2
TP6	D4	TP45	A2
TP7	E4	TP46	A2
TP8	E4	T1	A8
TP9	D4	T2	B8
TP11	E4	T3	A8
TP12	D5	T4	B8
TP13	E3	T5	C8
TP14	E4	T6	E8
TP15	E4	T7	E8
TP16	E4	T8	E8
TP17	E4	T9	D8
TP18	E3	T10	D8
TP20	E4	T11	D8
TP21	E4	T37	E7
TP22	E4	T38	E7
TP23	E4		
TP24	E4		
TP25	E4		
TP26	B4		
TP27	E5		
TP28	E5		
TP30	A3		
TP31	A2		
TP32	A2		
TP34	A2		
TP35	B2		
TP36	A3		
TP37	A3		
TP38	A3		
TP39	A2		
TP40	A2		

■ PRINTED CIRCUIT BOARD

FOR INFORMATION ONLY (NO SERVICE PARTS WILL BE AVAILABLE)

VIDEO

(B, G, E, J models only)

The first digit of a component indicates the component type.

1xxx : Connector 3xxx : Resistor 5xxx : Coil 7xxx : IC, Transistor, FET
2xxx : Capacitor 4xxx : SMD jumper 6xxx : Diode 9xxx : Wire jumper

1100 C5	2117 A3	2135 B9	3112 B2	3133 A5	3151 A8	3170 B10	4107 B7	6104 A3	7104 B2
1101 A9	2118 A4	2136 A9	3113 B2	3134 A4	3152 A9	3171 C6	4108 A5	6105 A3	7105 B3
1102 A6	2119 A5	2137 B10	3114 B2	3135 A4	3153 A9	3172 B4	4109 B6	6106 A4	7106 B3
1103 A3	2120 A4	2138 A9	3115 B2	3136 A4	3154 A9	3173 B1	4110 C7	6107 A4	7107 A4
2100 B6	2121 B4	2139 A8	3116 B2	3137 B6	3155 A8	3174 B1	4111 C6	6108 A6	7108 A6
2102 B4	2122 A5	2140 A8	3117 B2	3138 B6	3156 A8	3175 A4	4112 B8	6109 A7	7109 B7
2104 B4	2123 A4	2141 A10	3118 B2	3139 A6	3157 A10	3176 B8	4113 B9	6110 A7	7110 B7
2105 C3	2124 B6	2142 A10	3119 B2	3140 A6	3159 B8	3177 B8	4114 B9	6111 A8	7111 B8
2106 B2	2125 C7	2143 C9	3120 B2	3141 B7	3160 B8	3178 C8	4118 B6	6112 A9	7112 B9
2107 B3	2126 C7	2144 C9	3121 B3	3142 B7	3161 B8	3179 B1	4119 B7	6113 A9	7113 B10
2108 A2	2127 A6	2145 B10	3122 B3	3143 B7	3162 B8	3180 B1	4120 B8	6114 A8	7115 C6
2109 A2	2128 B5	2149 C4	3123 B3	3144 B7	3163 B9	4100 C6	4123 A2	6115 A8	7116 A1
2110 A2	2129 A7	2150 C4	3124 B3	3145 B7	3164 B9	4101 A2	4124 A3	6116 A10	7117 A1
2111 A2	2130 A7	2151 C1	3125 A2	3146 B8	3165 B9	4102 A3	4125 A3	6117 A10	7118 B8
2113 A3	2131 A8	2152 B2	3126 A2	3147 B8	3166 B9	4103 A3	5100 A5	6118 A6	7119 C8
2114 A2	2132 B8	3100 A10	3128 A2	3148 B8	3167 B10	4104 A5	6100 A2	6119 A9	7121 B1
2115 A3	2133 A8	3110 B4	3131 A4	3149 A6	3168 B10	4105 A5	6101 A3	6120 A4	
2116 A3	2134 A9	3111 B4	3132 A4	3150 A7	3169 B10	4106 B7	6103 A3	7103 B2	

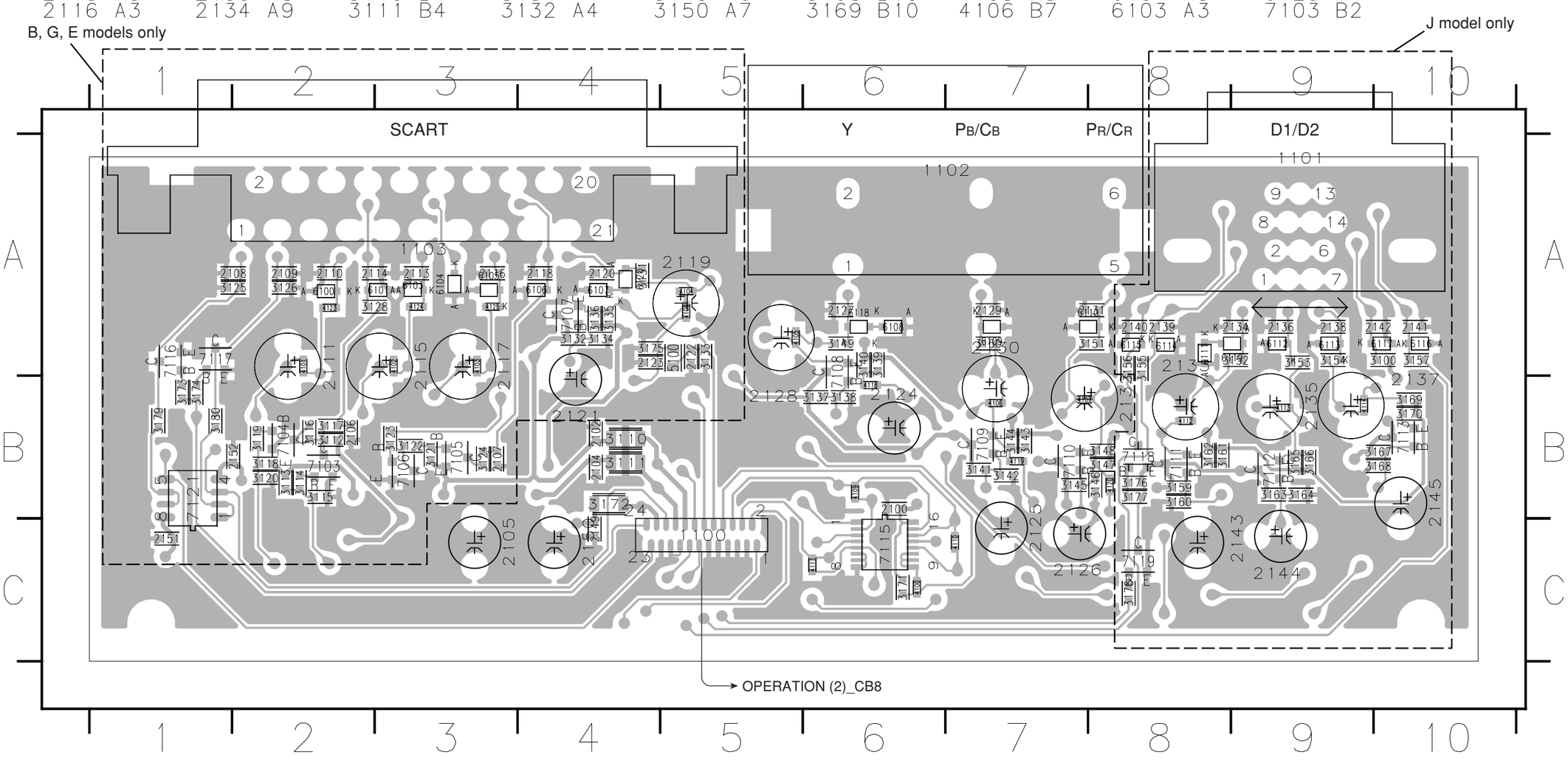

■ PRINTED CIRCUIT BOARD

OPERATION (1) P.C.B. (Side A)

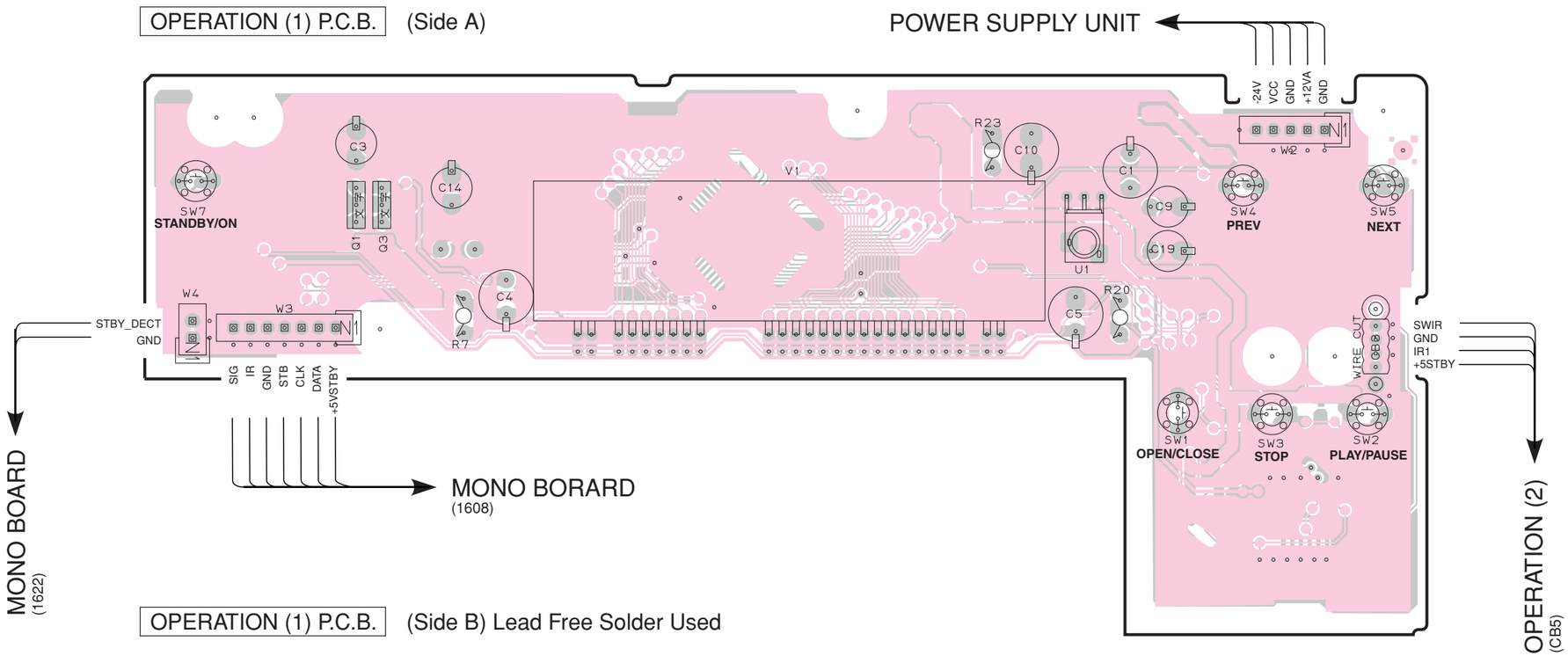

OPERATION (1) P.C.B. (Side B) Lead Free Solder Used

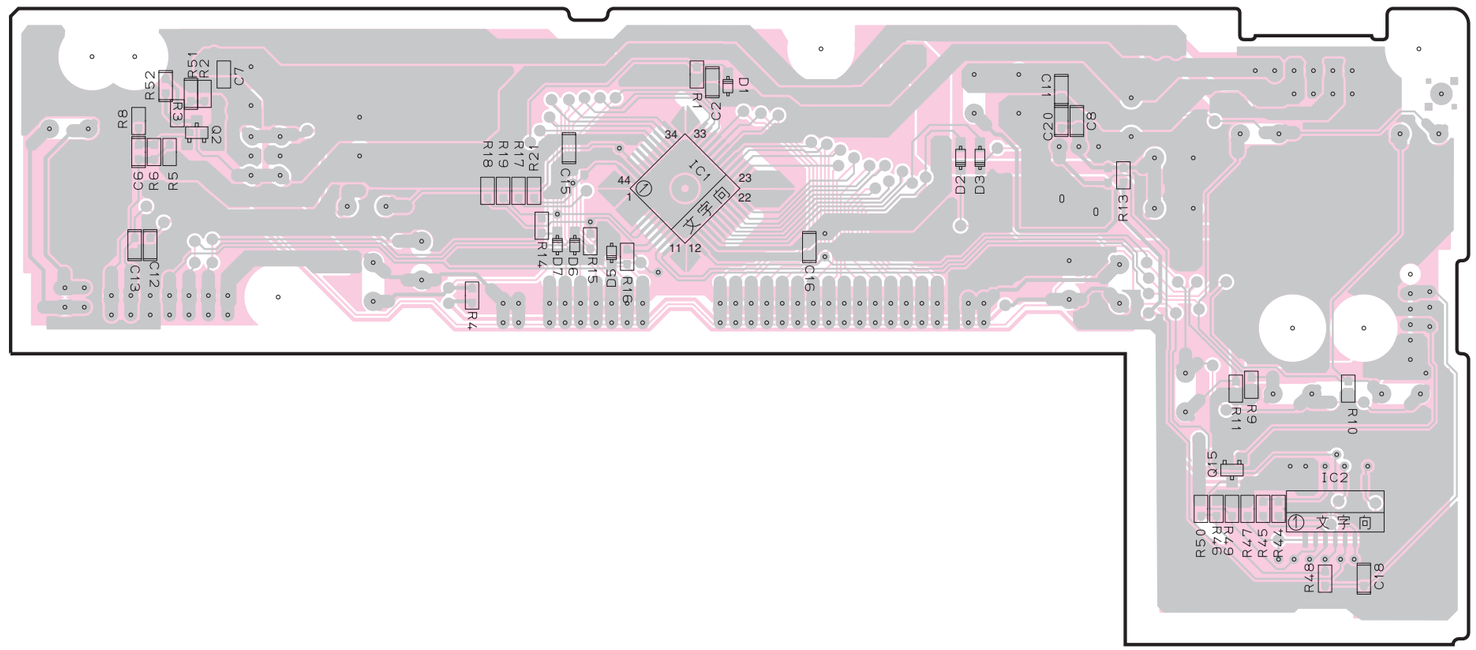

• **Semiconductor Location**

Ref. No.	Location
D1	E5
D2	F5
D3	F5
D5	E5
D6	E5
D7	E5
IC1	E5
IC2	H6
Q1	C2
Q2	C5
Q3	C2
Q15	G6

■ PRINTED CIRCUIT BOARD

OPERATION (2) P.C.B. (Side A)

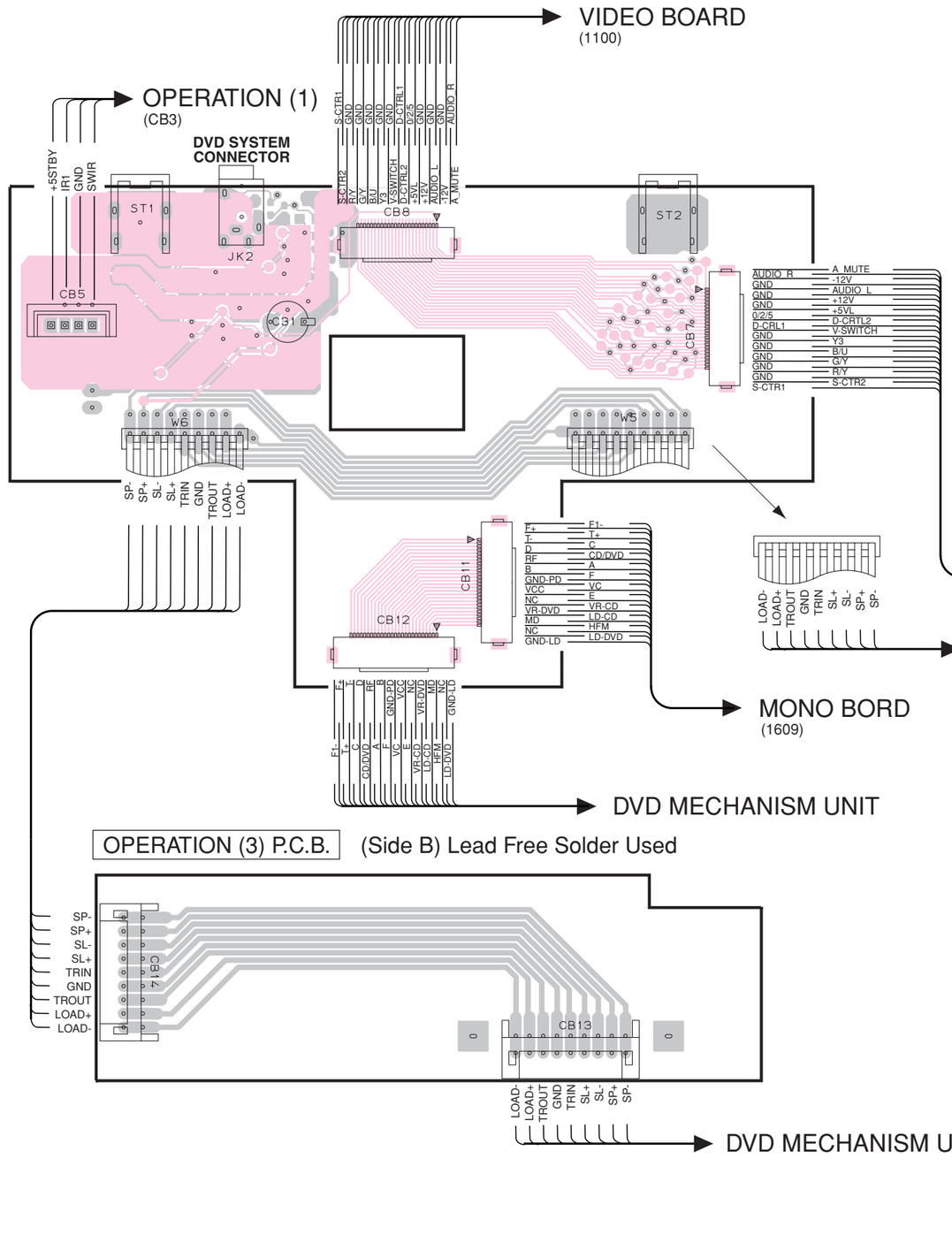

OPERATION (3) P.C.B. (Side B) Lead Free Solder Used

DVD MECHANISM UNIT

OPERATION (2) P.C.B. (Side B) Lead Free Solder Used

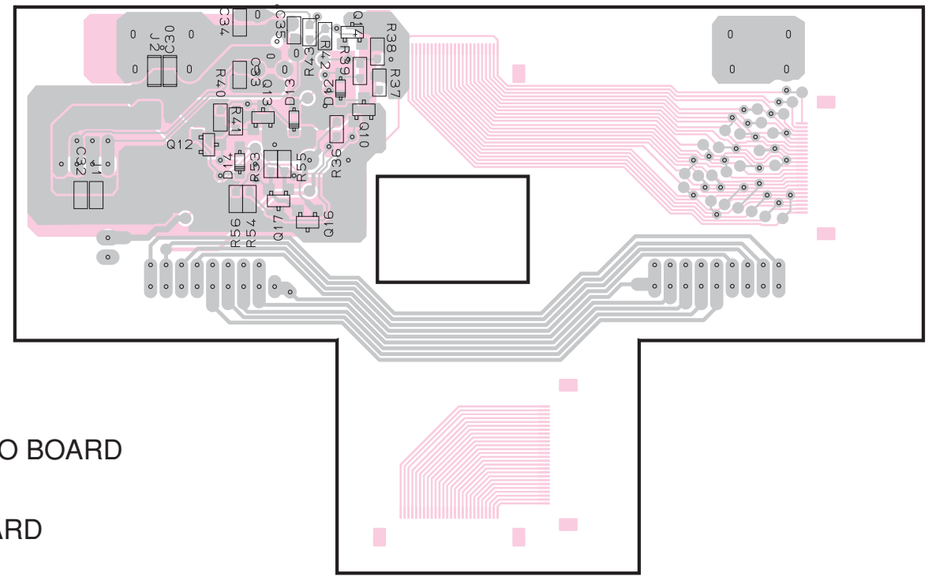

• **Semiconductor Location**

Ref. No.	Location
D12	H3
D13	H3
D14	H3
Q10	H3
Q12	G3
Q13	H3
Q14	H2
Q16	H3
Q17	H3

■ SCHEMATIC DIAGRAM

FOR INFORMATION ONLY (NO SERVICE PARTS WILL BE AVAILABLE)

The first digit of a component indicates the component type.

1xxx : Connector	3xxx : Resistor	5xxx : Coil	7xxx : IC, Transistor, FET
2xxx : Capacitor	4xxx : SMD jumper	6xxx : Diode	9xxx : Wire jumper

MONO BOARD 1/6

M1 INDEX

NAME	TYPE	DEVICE
5VL	Digital 5V	SUPPLY
RVCC	Servo 5V	MT1336E
AVCC	RF 5V	PICKUP HEADER
DV33	Digital 3.3V	Flash, VideoDAC
DV33	Digital 3.3V	MT1369E
AV33	Servo 3.3V	MT1369E
V25	Digital 2.5V	MT1369E
SD33	Digital 3.3V	SDRAM
+5VV	VIDEO 5V	VIDEO
VCC5330	Audio 5V	Audio
+12V	Audio 12V	Audio filter
+5V8756D	Audio 5V	Audio DAC
+5V8756A	Audio 5V	Audio DAC

1601	A3	2607	A1	2781	B1	2800	C1	3606	C3	3718	B1	5602	D1	6604	D1	7601	D1	7635	D2
1610	A2	2608	E1	2782	E2	2802	A1	3607	C2	3744	B1	5603	A1	6605	E2	7616	B3	7636	D2
2601	C2	2609	A1	2783	E1	3602	B3	3609	C3	3747	D2	5604	A1	6620	C2	7617	C2		
2603	A1	2706	D2	2784	B1	3603	C2	3610	C2	3748	D2	6601	C2	6621	C2	7618	C3		
2605	C1	2778	C3	2785	E1	3604	C2	3611	E2	3749	D2	6602	C3	6622	B2	7633	C1		
2606	E1	2779	B3	2786	B1	3605	C3	3714	C1	3832	D2	6603	B3	6623	B2	7634	C1		

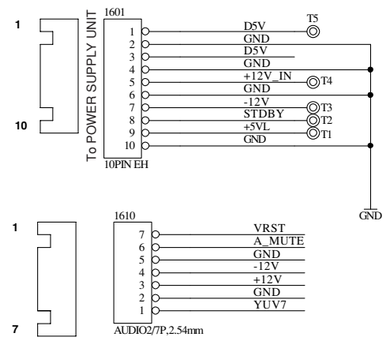

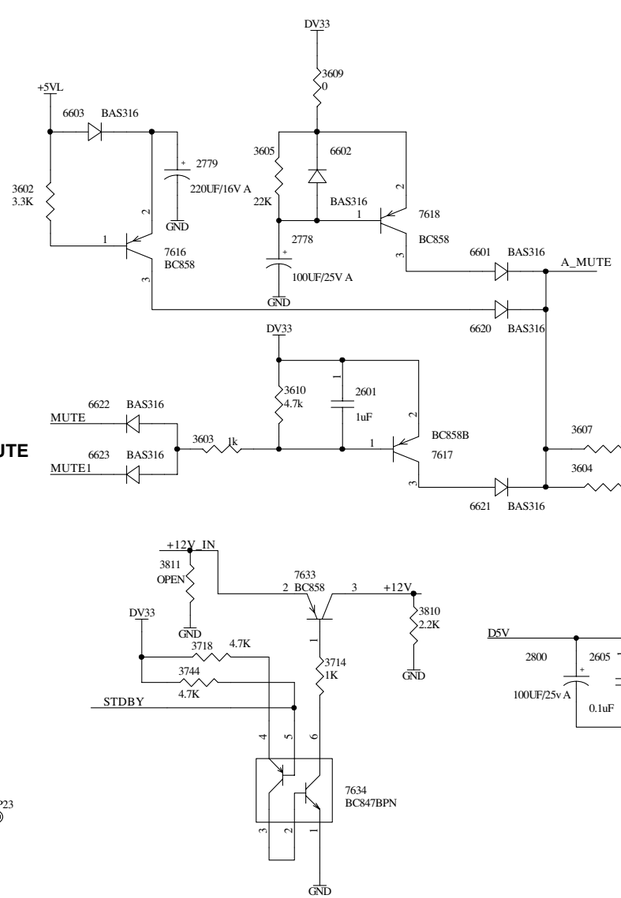

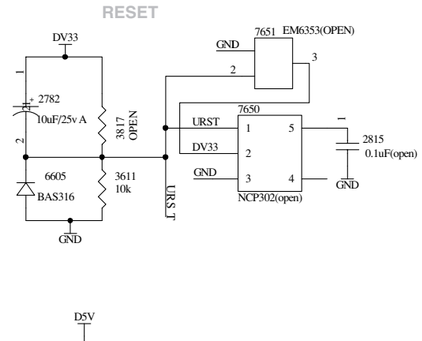

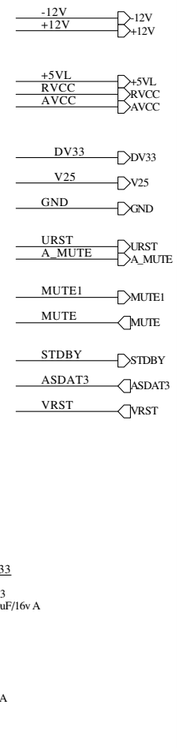

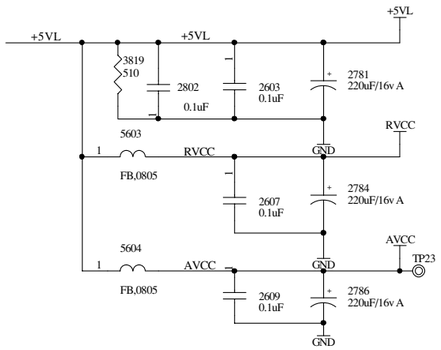

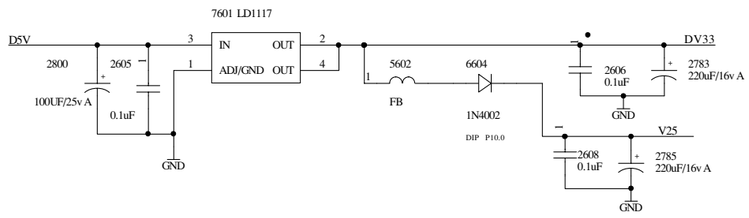

1601	A3	2607	A1
1610	A2	2608	E1
2601	C2	2609	A1
2603	A1	2706	D2
2605	C1	2778	C3
2606	E1	2779	B3

2781	B1	2800	C1	3606	C3	3718	B1	5602	D1	6604	D1	7601	D1	7635	D2
2782	E2	2802	A1	3607	C2	3744	B1	5603	A1	6605	E2	7616	B3	7636	D2
2783	E1	3602	B3	3609	C3	3747	D2	5604	A1	6620	C2	7617	C2		
2784	B1	3603	C2	3610	C2	3748	D2	6601	C2	6621	C2	7618	C3		
2785	E1	3604	C2	3611	E2	3749	D2	6602	C3	6622	B2	7633	C1		
2786	B1	3605	C3	3714	C1	3832	D2	6603	B3	6623	B2	7634	C1		

* Schematic diagram is subject to change without notice.

※ 本回路図は、改良のため予告なく変更することがございます。

■ SCHEMATIC DIAGRAM

FOR INFORMATION ONLY (NO SERVICE PARTS WILL BE AVAILABLE)

The first digit of a component indicates the component type.

1xxx : Connector	3xxx : Resistor	5xxx : Coil	7xxx : IC, Transistor, FET
2xxx : Capacitor	4xxx : SMD jumper	6xxx : Diode	9xxx : Wire jumper

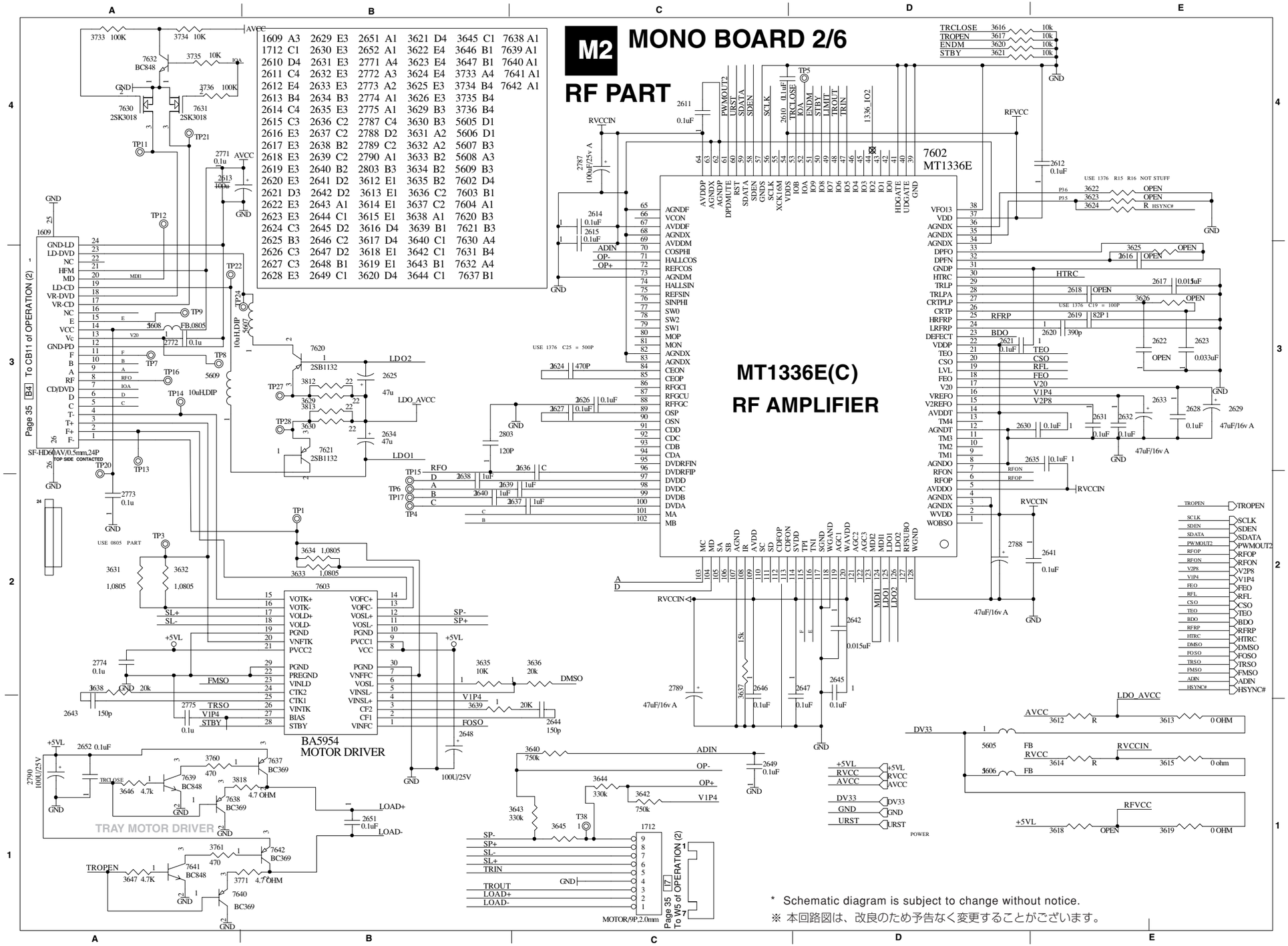

* Schematic diagram is subject to change without notice.

※ 本回路図は、改良のため予告なく変更することがございます。

■ SCHEMATIC DIAGRAM

FOR INFORMATION ONLY (NO SERVICE PARTS WILL BE AVAILABLE)

The first digit of a component indicates the component type.

1xxx : Connector 3xxx : Resistor 5xxx : Coil 7xxx : IC, Transistor, FET
2xxx : Capacitor 4xxx : SMD jumper 6xxx : Diode 9xxx : Wire jumper

MONO BOARD 3/6

M3 SERVO PART

1604	A1	2670	B3	2695	C1	3655	C4	3738	A1
1607	E4	2671	B3	2696	C1	3656	B1	3739	C1
1608	A1	2672	B3	2697	C1	3657	B1	3740	D4
1622	B1	2673	B3	2698	B1	3658	B4	3741	A1
2653	A2	2674	E3	2699	B1	3659	B4	5610	E4
2654	B4	2675	E4	2700	B1	3660	E3	5613	E1
2655	B4	2676	B3	2701	B1	3661	B3	5625	B4
2656	C4	2677	B3	2702	C1	3662	B3	5626	B1
2657	A2	2678	B3	2703	C1	3663	B3	5628	A2
2658	A2	2679	B3	2704	C1	3664	B3	5701	A2
2659	B4	2680	B3	2791	B4	3665	B3	7605	A2
2660	B4	2681	B3	2804	A2	3666	E3	7605	A2
2661	B1	2682	E4	2808	E3	3667	B3	7606	B4
2662	B1	2683	E4	2809	B2	3668	A1	7631	B4
2663	C4	2686	D1	3648	C4	3669	B1	7632	A4
2664	B4	2687	B1	3649	C4	3670	A1		
2665	B4	2690	A1	3650	C4	3671	E1		
2666	B4	2691	B1	3651	A2	3709	E4		
2667	B4	2692	B1	3652	B2	3726	C1		
2668	B4	2693	C1	3653	A2	3732	D4		

MT1379BE(C)

SERVO AND MPEG DECODER

Page 34 To W3 of OPERATION (1)

Page 34 To W4 of OPERATION (1)

* Schematic diagram is subject to change without notice.

※ 本回路図は、改良のため予告なく変更することがございます。

■ SCHEMATIC DIAGRAM

FOR INFORMATION ONLY (NO SERVICE PARTS WILL BE AVAILABLE)

The first digit of a component indicates the component type.

1xxx : Connector	3xxx : Resistor	5xxx : Coil	7xxx : IC, Transistor, FET
2xxx : Capacitor	4xxx : SMD jumper	6xxx : Diode	9xxx : Wire jumper

MONO BOARD 4/6

M4 MEMORY

2710	D3	2717	D2	3673	D2	5614	C2
2711	D3	2720	B1	3674	D2	5627	C2
2712	D3	2776	B1	3675	D2	7609	D4
2713	D3	2777	C1	3676	D2	7610	B1
2714	E3	2793	C3	3680	B2	7611	B2
2715	E3	3672	D2	3746	B1		

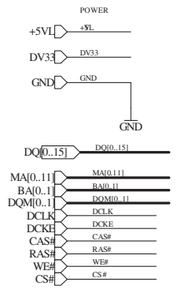

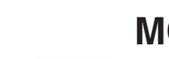

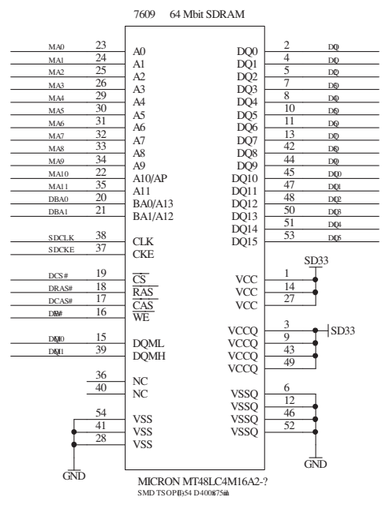

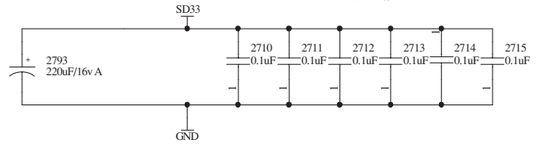

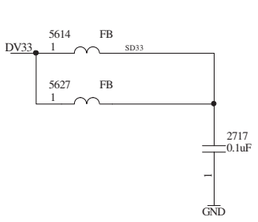

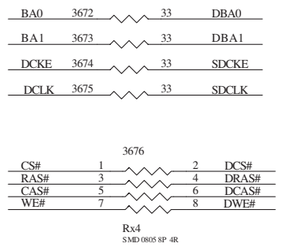

* Schematic diagram is subject to change without notice.

※ 本回路図は、改良のため予告なく変更することがございます。

■ SCHEMATIC DIAGRAM

FOR INFORMATION ONLY (NO SERVICE PARTS WILL BE AVAILABLE)

The first digit of a component indicates the component type.

1xxx : Connector	3xxx : Resistor	5xxx : Coil	7xxx : IC, Transistor, FET
2xxx : Capacitor	4xxx : SMD jumper	6xxx : Diode	9xxx : Wire jumper

MONO BOARD 5/6

M5 VIDEO

1603 E4	2728 D1	2741 B1	2753 C1	3694 A1	3753 D2	5620 C3	6613 C2	7626 C2	
1606 E4	2729 A1	2742 B1	3681 D3	3695 A1	3754 D2	5621 C2	6614 C2	7627 C1	
1620 A2	2730 D1	2743 C3	3683 D2	3696 A1	3755 C3	5622 C1	6615 C2		
2721 D3	2731 D1	2744 C3	3684 D2	3697 C3	3756 C2	6606 D3	6616 C1		
2722 D3	2734 B2	2745 C3	3686 D2	3699 B2	3757 C2	6607 D2	6617 C1		
2723 D3	2735 B2	2746 C2	3687 A1	3700 C2	5615 D3	6608 D2	7612 A1		
2724 D2	2737 A1	2747 C2	3688 D2	3702 B2	5616 D2	6609 D2	7622 D3		
2725 D2	2738 A1	2748 C2	3690 D1	3705 C2	5617 D1	6610 D1	7623 D2		
2726 D2	2739 B1	2750 C1	3692 A1	3707 B1	5618 B2	6611 D1	7624 D1		
2727 A1	2740 B1	2752 C1	3693 A1	3752 D3	5619 B1	6612 C3	7625 C3		

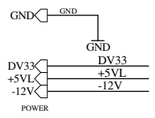



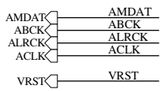

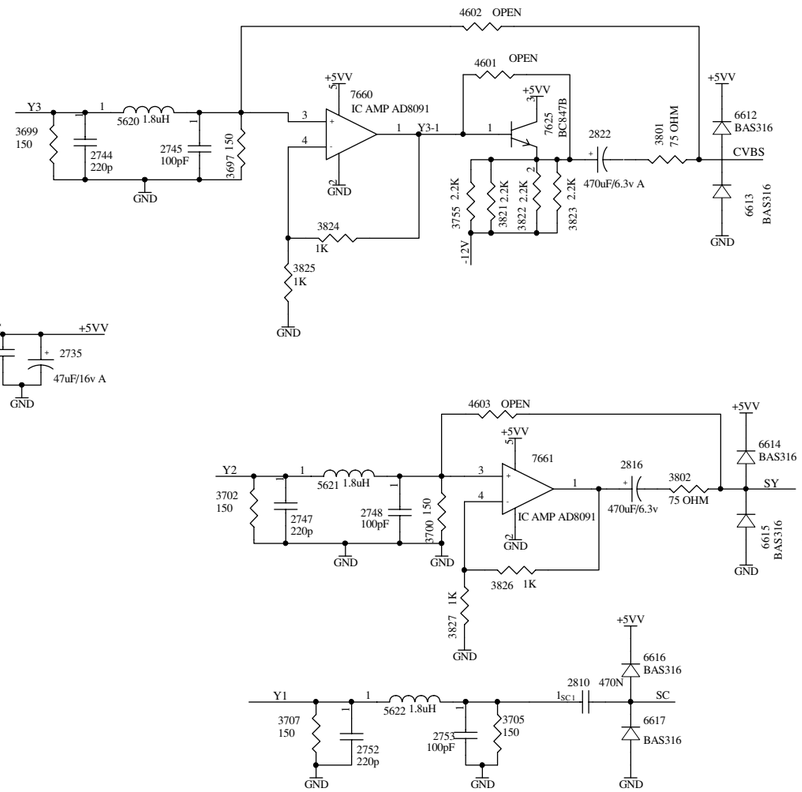

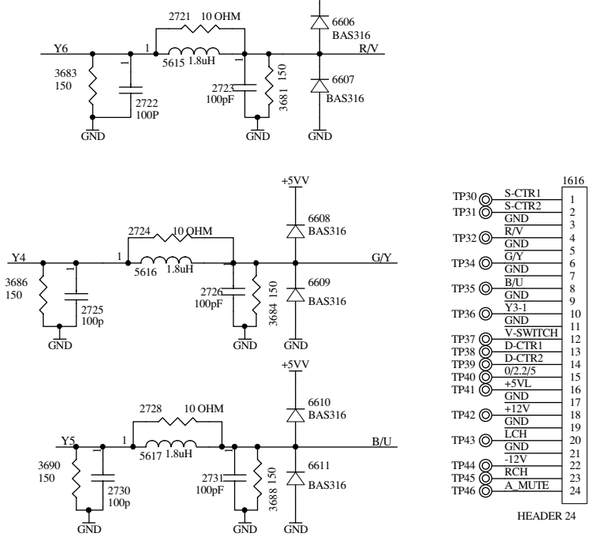

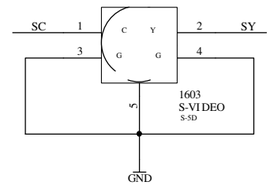

Page 35 F7 To CB7 of OPERATION (2)

* Schematic diagram is subject to change without notice.

※ 本回路図は、改良のため予告なく変更することがございます。

■ SCHEMATIC DIAGRAM

FOR INFORMATION ONLY (NO SERVICE PARTS WILL BE AVAILABLE)

The first digit of a component indicates the component type.

1xxx : Connector	3xxx : Resistor	5xxx : Coil	7xxx : IC, Transistor, FET
2xxx : Capacitor	4xxx : SMD jumper	6xxx : Diode	9xxx : Wire jumper

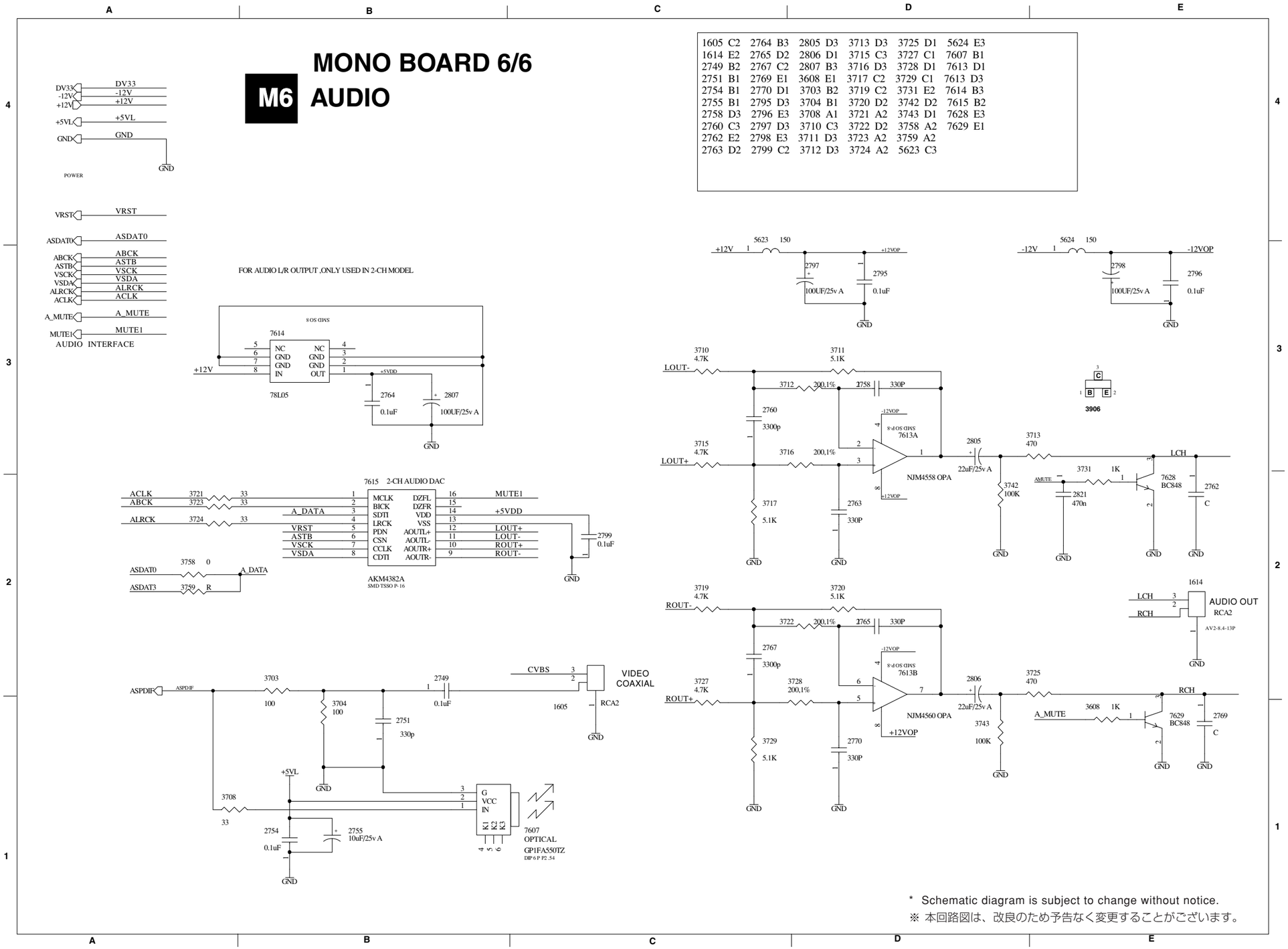

* Schematic diagram is subject to change without notice.

※ 本回路図は、改良のため予告なく変更することがございます。

■ SCHEMATIC DIAGRAM

FOR INFORMATION ONLY (NO SERVICE PARTS WILL BE AVAILABLE)

The first digit of a component indicates the component type.

1xxx : Connector	3xxx : Resistor	5xxx : Coil	7xxx : IC, Transistor, FET
2xxx : Capacitor	4xxx : SMD jumper	6xxx : Diode	9xxx : Wire jumper

* Schematic diagram is subject to change without notice.

※ 本回路図は、改良のため予告なく変更することがございます。

V VIDEO BOARD (B, G, E, J models only)

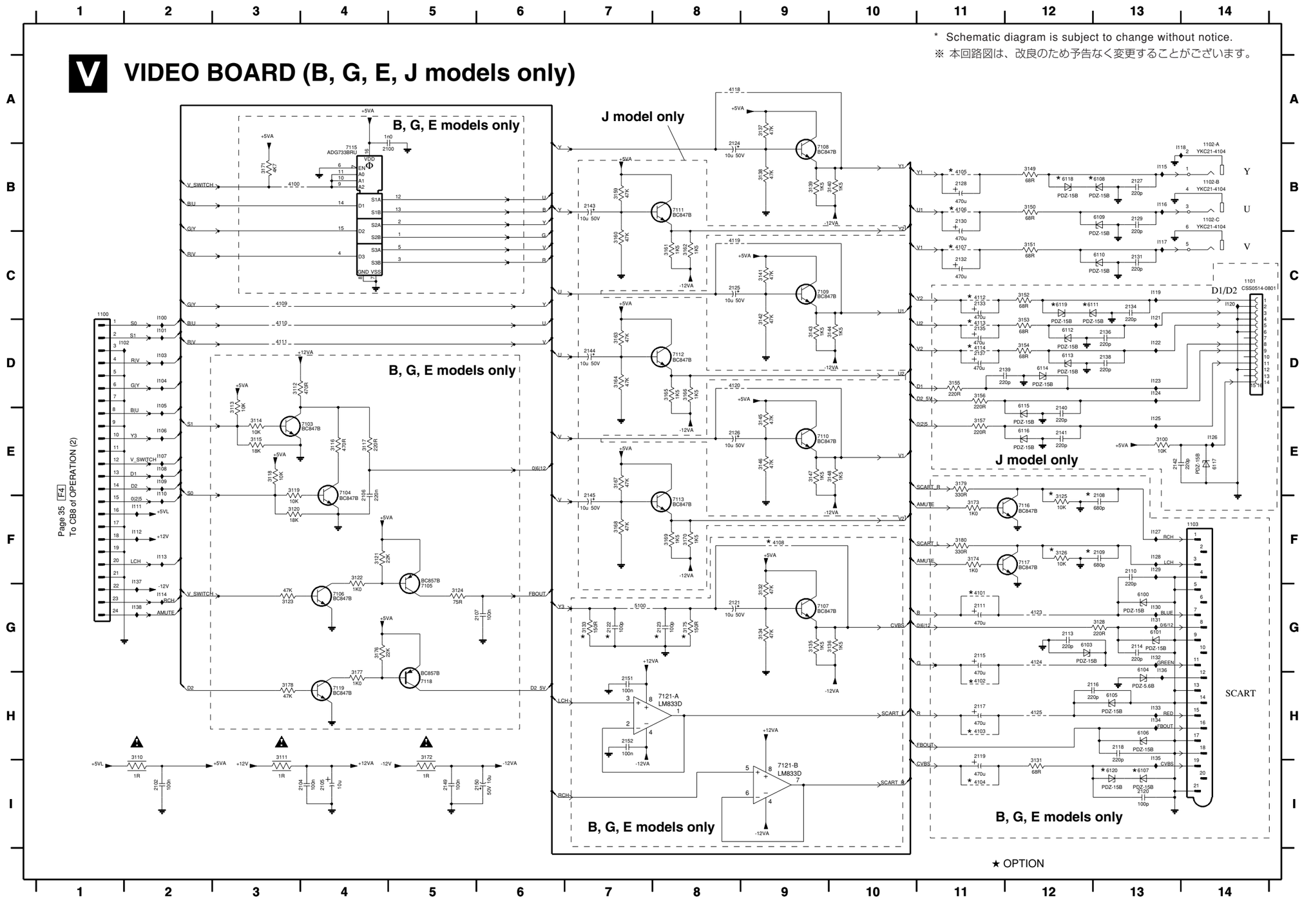

1100 C1	3175 G8
1101 C14	3176 G4
1102-A B14	3177 H4
1102-B B14	3178 H3
1102-C B14	3179 E11
1103 F14	3180 F11
2100 B4	4100 B3
2102 I2	4101 G11
2104 I4	4102 H11
2105 I4	4103 H11
2106 E4	4104 I11
2107 G6	4105 B11
2108 F13	4106 B11
2109 F13	4107 C11
2110 F13	4108 F9
2111 G11	4109 C3
2113 G12	4110 D3
2114 G13	4111 D3
2115 G11	4112 C11
2116 H12	4113 D11
2117 H11	4114 D11
2118 H13	4118 A8
2119 H11	4119 C8
2120 I13	4120 D8
2121 G8	4123 G12
2122 G7	4124 G12
2123 G8	4125 H12
2124 B8	5100 G7
2125 C8	6100 G13
2126 E8	6101 G13
2127 B13	6103 G12
2128 B11	6104 G13
2129 B13	6105 H13
2130 B11	6106 H13
2131 C13	6107 I13
2132 C11	6108 B13
2133 C11	6109 B13
2134 C13	6110 C13
2135 D11	6111 C12
2136 D13	6112 D12
2137 D11	6113 D12
2138 D13	6114 D12
2139 D11	6115 D12
2140 E12	6116 E12
2141 E12	6117 E14
2142 E13	6118 B12
2143 B7	6119 C12
2144 D7	6120 I13
2145 F7	7103 E4
2149 I5	7104 E4
2150 I6	7105 G5
2151 H7	7106 G4
2152 H7	7107 G9
3100 E13	7108 B9
3110 H2	7109 C9
3111 H3	7110 E9
3112 D3	7111 B8
3113 D3	7112 D8
3114 E3	7113 F8
3115 E3	7115 B4
3116 E4	7116 F12
3117 E4	7117 F12
3118 E3	7118 H5
3119 E3	7119 H4
3120 F3	7121-A H8
3121 F4	7121-B I9
3122 F4	I100 C2
3123 G3	I101 D2
3124 G5	I102 D1
3125 F12	I103 D2
3126 F12	I104 D2
3128 G13	I105 D2
3131 I12	I106 E2
3132 G9	I107 E2
3133 G7	I108 E2
3134 G9	I109 E2
3135 G9	I110 E2
3136 G10	I11 F2
3137 A9	I112 F2
3138 B9	I113 F2
3139 B9	I114 G2
3140 B10	I115 B13
3141 C9	I116 B13
3142 C9	I117 C13
3143 D9	I118 B13
3144 D10	I119 C13
3145 E9	I120 C14
3146 E9	I121 C13
3147 E9	I122 D13
3148 E10	I123 D13
3149 B12	I124 D13
3150 B12	I125 E13
3151 C12	I126 E14
3152 C12	I127 F13
3153 D12	I128 F13
3154 D12	I129 F13
3155 D11	I130 G13
3156 D11	I131 G13
3157 E11	I132 G13
3159 B7	I133 H13
3160 C7	I134 H13
3161 C8	I135 H13
3162 C8	I136 G13
3163 D7	I137 F2
3164 D7	I138 G2
3165 D8	
3166 D8	
3167 E7	
3168 F7	
3169 F8	
3170 F8	
3171 B3	
3172 H5	
3173 F11	
3174 F11	

■ SCHEMATIC DIAGRAM (OPERATION 1/2)

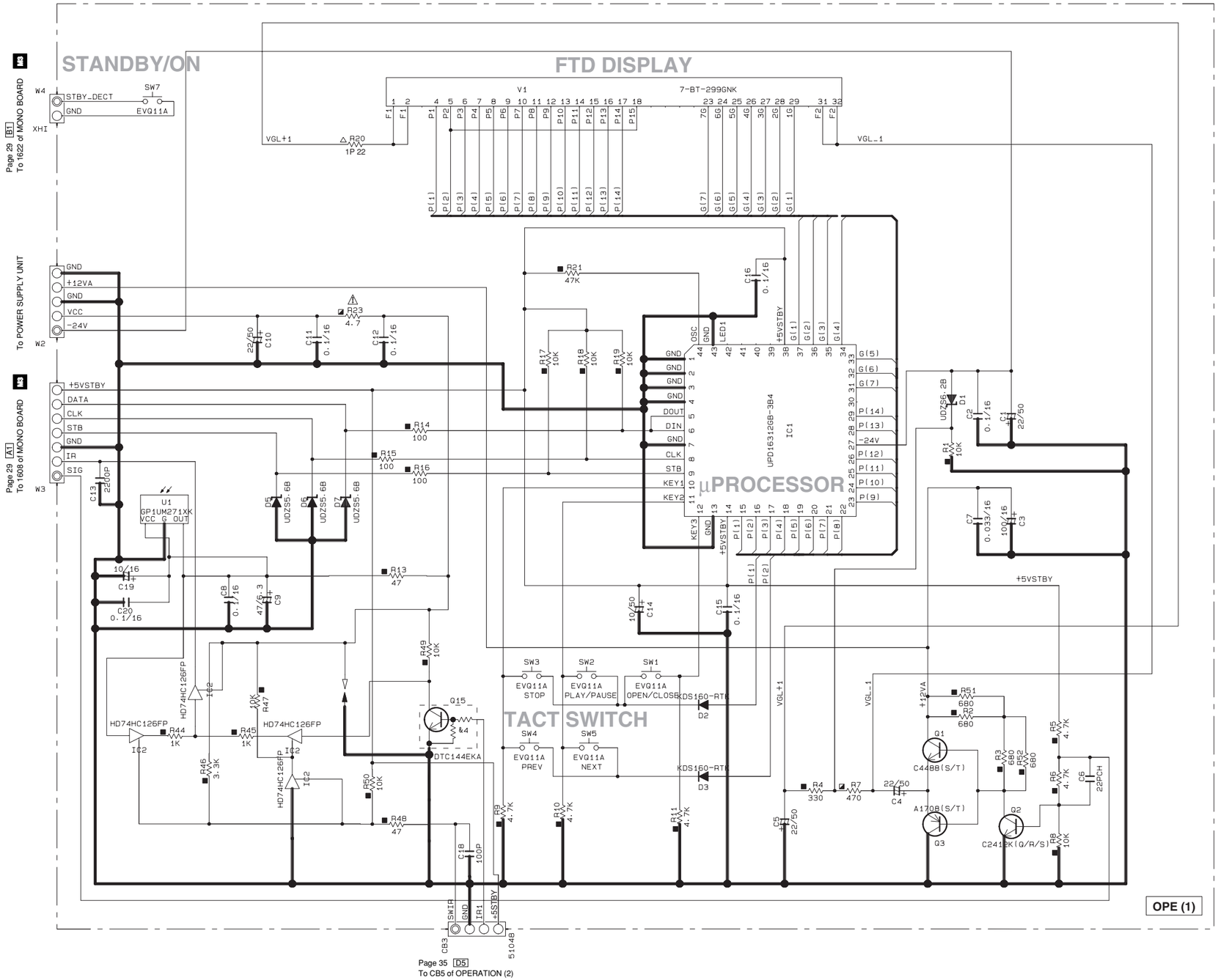

IC2 : HD74HC126FP
Quadruple Bus Buffer Gates
(with 3-state outputs)

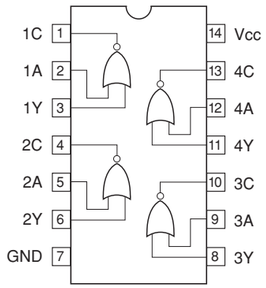

★ All voltages are measured with a 10MΩ/V DC electronic volt meter.
★ Components having special characteristics are marked ⚠ and must be replaced with parts having specifications equal to those originally installed.
★ Schematic diagram is subject to change without notice.

● 電圧は、内部抵抗10MΩの電圧計で測定したものです。
● ⚠印のある部品は、安全性確保部品を示しています。部品の交換が必要な場合、パーツリストに記載されている部品を使用してください。
● 本回路図は標準回路図です。改良のため予告なく変更することがございます。

■ SCHEMATIC DIAGRAM (OPERATION 2/2)

RESISTOR

REMARKS	PARTS NAME
NO MARK	CARBON FILM RESISTOR (P=5)
◪	CARBON FILM RESISTOR (P=10)
△	METAL OXIDE FILM RESISTOR
◬	METAL FILM RESISTOR
⊠	METAL PLATE RESISTOR
◪	FIRE PROOF CARBON FILM RESISTOR
□	CEMENT MOLDED RESISTOR
⊘	SEMI VARIABLE RESISTOR
▤	CHIP RESISTOR

CAPACITOR

REMARKS	PARTS NAME	
NO MARK	ELECTROLYTIC CAPACITOR	⧺
⊗	TANTALUM CAPACITOR	
NO MARK	CERAMIC CAPACITOR	⧺
◉	CERAMIC TUBULAR CAPACITOR	
◎	POLYESTER FILM CAPACITOR	
○	POLYSTYRENE FILM CAPACITOR	
⦶	MICA CAPACITOR	
Ⓟ	POLYPROPYLENE FILM CAPACITOR	
◍	SEMICONDUCTIVE CERAMIC CAPACITOR	
Ⓢ	POLYPHENYLENE SULFIDE FILM CAPACITOR	

		J, B, G, E	U, C, R, K, A, L
s1	CB8	WB18560	X

X : NOT USED
O : USED

Interchangeable Parts at Manufacture-Stage

Mark	Reference Parts Number	Parts Name
&1		
&2	Q16, 17	1037AK Q, R, S TP 1235A E F TP
&3	Q13	DTA144EKA TP KRA104S-RTK
&4	Q10, 12, 15	DTC144EKA TP KRC104S-RTK

★ All voltages are measured with a 10MΩ/V DC electronic volt meter.
★ Components having special characteristics are marked ⚠ and must be replaced with parts having specifications equal to those originally installed.
★ Schematic diagram is subject to change without notice.

● 電圧は、内部抵抗10MΩの電圧計で測定したものです。
● ⚠印のある部品は、安全性確保部品を示しています。部品の交換が必要な場合、パーツリストに記載されている部品を使用してください。
● 本回路図は標準回路図です。改良のため予告なく変更することがございます。

NOTICE (model)
(J)····· JAPAN
(U)····· U.S.A
(C)····· CANADA
(R)····· GENERAL
(T)····· CHINA
(K)····· KOREA
(A)····· AUSTRALIA
(B)····· BRITISH
(G)····· EUROPE
(L)····· SINGAPORE
(E)····· SOUTH EUROPE

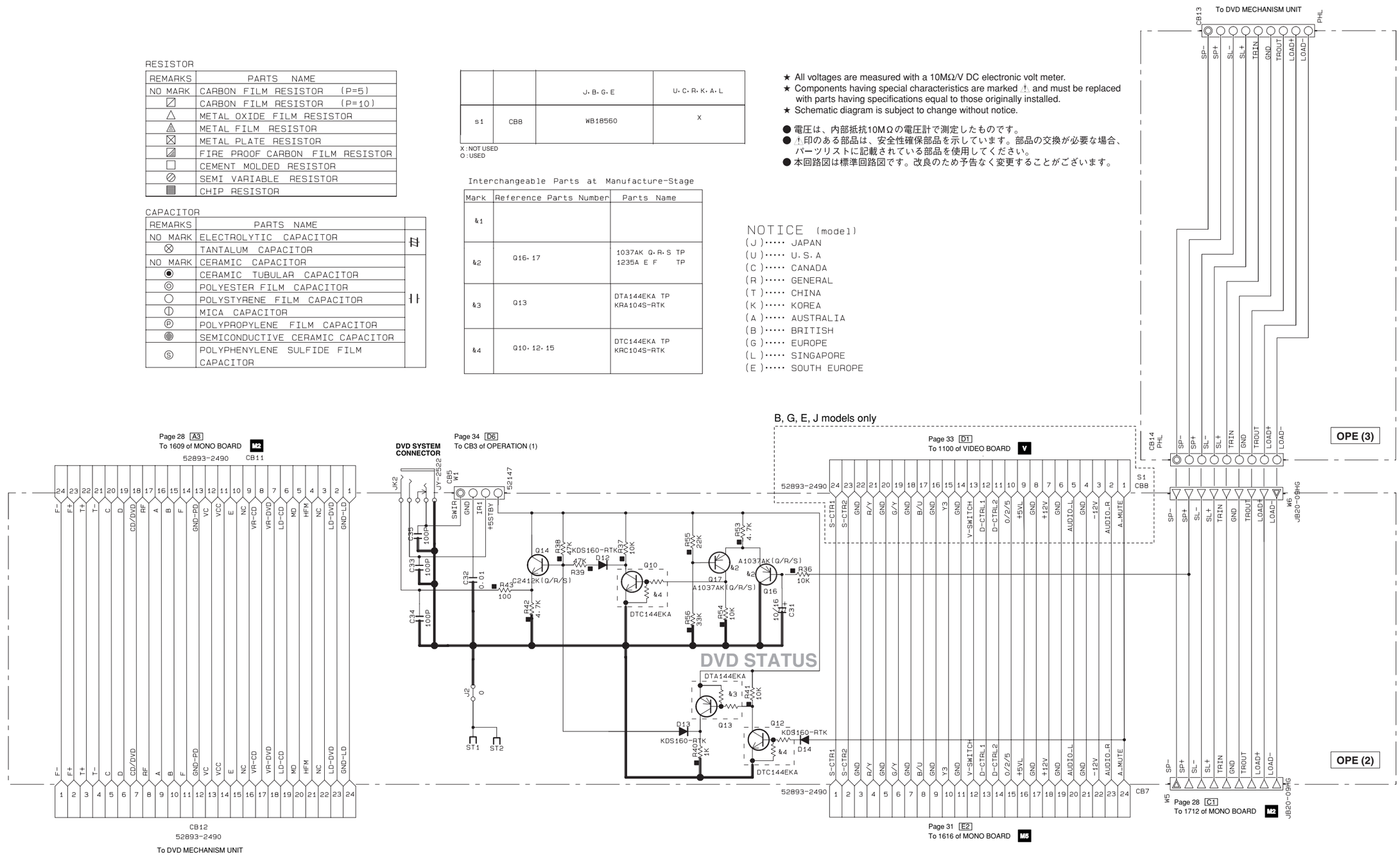

■ PIN CONNECTION DIAGRAM

● ICs

uPD16312

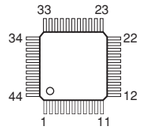

HD74HC123FPEL

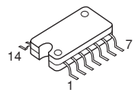

● Transistors

2SA1037AK (Q, R, S)
2SC2412K (Q, R, S)
DTC144EKA
DTA144EKA



2SC4488 (S, T)
2SA1708 (S, T)



● Diodes

UDZS5.6BTE-17
UDZ6.2B 6.2V

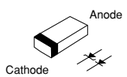

KDS160-RTX

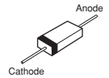

PARTS LIST

■ ELECTRICAL PARTS

■ WARNING

● Components having special characteristics are marked ⚠ and must be replaced with parts having specifications equal to those originally installed.

●⚠印のある部分は、安全確保部品を示しています。部品の交換が必要な場合、パーツリストに記載されている部品を使用してください。
●部品価格ランクは、予告なく変更することがあります。

ABBREVIATIONS IN THIS LIST ARE AS FOLLOWS:

C.A.EL.CHP	: CHIP ALUMI.ELECTROLYTIC CAP
C.CE	: CERAMIC CAP
C.CE.ARRAY	: CERAMIC CAP ARRAY
C.CE.CHP	: CHIP CERAMIC CAP
C.CE.ML	: MULTILAYER CERAMIC CAP
C.CE.M.CHP	: CHIP MULTILAYER CERAMIC CAP
C.CE.SAFTY	: RECOGNIZED CERAMIC CAP
C.CE.TUBLR	: CERAMIC TUBULAR CAP
C.CE.SMI	: SEMI CONDUCTIVE CERAMIC CAP
C.EL	: ELECTROLYTIC CAP
C.MICA	: MICA CAP
C.ML.FLM	: MULTILAYER FILM CAP
C.MP	: METALLIZED PAPER CAP
C.MYLAR	: MYLAR FILM CAP
C.MYLAR.ML	: MULTILAYER MYLAR FILM CAP
C.PAPER	: PAPER CAPACITOR
C.PLS	: POLYSTYRENE FILM CAP
C.POL	: POLYESTER FILM CAP
C.POLY	: POLYETHYLENE FILM CAP
C.PP	: POLYPROPYLENE FILM CAP
C.TNTL	: TANTALUM CAP
C.TNTL.CHP	: CHIP TANTALUM CAP
C.TRIM	: TRIMMER CAP
CN	: CONNECTOR
CN.BS.PIN	: CONNECTOR,BASE PIN
CN.CANNON	: CONNECTOR,CANNON
CN.DIN	: CONNECTOR,DIN
CN.FLAT	: CONNECTOR,FLAT CABLE
CN.POST	: CONNECTOR,BASE POST
COIL.MX.AM	: COIL,AM MIX
COIL.AT.FM	: COIL,FM ANTENNA
COIL.DT.FM	: COIL,FM DETECT
COIL.MX.FM	: COIL,FM MIX
COIL,OUTPT	: OUTPUT COIL
DIOD.ARRAY	: DIODE ARRAY
DIODE.BRG	: DIODE BRIDGE
DIODE.CHP	: CHIP DIODE
DIODE.VAR	: VARACTOR DIODE
DIOD.Z.CHP	: CHIP ZENER DIODE
DIODE.ZENR	: ZENER DIODE
DSCR.CE	: CERAMIC DISCRIMINATOR
FER.BEAD	: FERRITE BEADS
FER.CORE	: FERRITE CORE
FET.CHP	: CHIP FET
FL.DSPLY	: FLUORESCENT DISPLAY
FLTR.CE	: CERAMIC FILTER
FLTR.COMB	: COMB FILTER MODULE
FLTR.LC.RF	: LC FILTER,EMI
GND.MTL	: GROUND PLATE
GND.TERM	: GROUND TERMINAL
HOLDER.FUS	: FUSE HOLDER
IC.PRTCT	: IC PROTECTOR
JUMPER.CN	: JUMPER CONNECTOR
JUMPER.TST	: JUMPER,TEST POINT
L.DTCT	: LIGHT DETECTING MODULE
L.EMIT	: LIGHT EMITTING MODULE
LED.DSPLY	: LED DISPLAY
LED.INFRD	: LED,INFRARED
MODUL.RF	: MODULATOR,RF
PHOT.CPL	: PHOTO COUPLER
PHOT.INTR	: PHOTO INTERRUPTER
PHOT.RFLCT	: PHOTO REFLECTOR
PIN.TEST	: PIN,TEST POINT
PLST.RIVET	: PLASTIC RIVET
R.ARRAY	: RESISTOR ARRAY
R.CAR.	: CARBON RESISTOR
R.CAR.CHP	: CHIP RESISTOR
R.CAR.FP	: FLAME PROOF CARBON RESISTOR
R.FUS	: FUSABLE RESISTOR
R.MTL.CHP	: CHIP METAL FILM RESISTOR
R.MTL.FLM	: METAL FILM RESISTOR
R.MTL.OXD	: METAL OXIDE FILM RESISTOR
R.MTL.PLAT	: METAL PLATE RESISTOR
RSNR.CE	: CERAMIC RESONATOR
RSNR.CRYS	: CRYSTAL RESONATOR
R.TW.CEM	: TWIN CEMENT FIXED RESISTOR
R.WW	: WIRE WOUND RESISTOR
SCR.BND.HD	: BIND HEAD B-TITE SCREW
SCR.BW.HD	: BW HEAD TAPPING SCREW
SCR.CUP	: CUP TITE SCREW
SCR.TERM	: SCREW TERMINAL
SCR.TR	: SCREW,TRANSISTOR
SUPRT.PCB	: SUPPORT,P.C.B.
SURG.PRTCT	: SURGE PROTECTOR
SW.TACT	: TACT SWITCH
SW.LEAF	: LEAF SWITCH
SW.LEVER	: LEVER SWITCH
SW.MICRO	: MICRO SWITCH
SW.PUSH	: PUSH SWITCH
SW.RT.ENC	: ROTARY ENCODER
SW.RT.MTR	: ROTARY SWITCH WITH MOTOR
SW.RT	: ROTARY SWITCH
SW.SLIDE	: SLIDE SWITCH
TERM.SP	: SPEAKER TERMINAL
TERM.WRAP	: WRAPPING TERMINAL
THRMST.CHP	: CHIP THERMISTOR
TR.CHP	: CHIP TRANSISTOR
TR.DGT	: DIGITAL TRANSISTOR
TR.DGT.CHP	: CHIP DIGITAL TRANSISTOR
TRANS	: TRANSFORMER
TRANS.PULS	: PULSE TRANSFORMER
TRANS.PWR	: POWER TRANSFORMER ASS'Y
TUNER.AM	: TUNER PACK,AM
TUNER.FM	: TUNER PACK,FM
TUNER.PK	: FRONT-ENDTUNER PACK
VR	: ROTARY POTENTIOMETER
VR.MTR	: POTENTIOMETER WITH MOTOR
VR.SW	: POTENTIOMETER WITH ROTARY SW
VR.SLIDE	: SLIDE POTENTIOMETER
VR.TRIM	: TRIMMER POTENTIOMETER

Note) Those parts marked with "#" are not included in the P.C.B. ass'y.

P.C.B. OPERATION

	Ref. No.	PART NO.	Description		Remarks	Markets	部品名	Rank
＊%		WD854900	P.C.B.	OPERATION	SI	JBGE	ＰＣＢ　オペレーション	
＊%		WD921200	P.C.B.	OPERATION	SI	UCRKAL	ＰＣＢ　オペレーション	
	CB5	VK024800	CN.BS.PIN	4P			ベースピン	
＊	CB7	WB185600	CN.BS.PIN	52893 24P SE			ＦＦＣコネクター	
＊	CB8	WB185600	CN.BS.PIN	52893 24P SE		JBGE	ＦＦＣコネクター	
＊	CB11	WB185600	CN.BS.PIN	52893 24P SE			ＦＦＣコネクター	
＊	CB12	WB185600	CN.BS.PIN	52893 24P SE			ＦＦＣコネクター	
	CB13	VB858800	CN.BS.PIN	9P			ベースピン	01
	CB14	VB858800	CN.BS.PIN	9P			ベースピン	01
＊	C1	UM417220	C.EL	22uF 50V			ケミコンＫＳ	
	C3	UM398100	C.EL	100uF 16V			ケミコン	01
＊	C4	UM417220	C.EL	22uF 50V			ケミコンＫＳ	
＊	C5	UM417220	C.EL	22uF 50V			ケミコンＫＳ	
	C9	UM517470	C.EL	47uF 6.3V			ケミコンＭＳ５	
＊	C10	UM417220	C.EL	22uF 50V			ケミコンＫＳ	
	C14	UM417100	C.EL	10uF 50V			ケミコン	01
	C19	UM397100	C.EL	10uF 16V			ケミコン	01
	C31	UM397100	C.EL	10uF 16V			ケミコン	01
	D1	VU172100	DIODE.ZENR	UDZS6.2B 6.2V			ツェナーダイオード	
＊	D2	WC398800	DIODE	KDS160-RTK			ダイオード	
＊	D3	WC398800	DIODE	KDS160-RTK			ダイオード	
	D5	VU172000	DIODE.ZENR	UDZS5.6BTE-17 5.6V			ツェナーダイオード	01
	D6	VU172000	DIODE.ZENR	UDZS5.6BTE-17 5.6V			ツェナーダイオード	01
	D7	VU172000	DIODE.ZENR	UDZS5.6BTE-17 5.6V			ツェナーダイオード	01
＊	D12	WC398800	DIODE	KDS160-RTK			ダイオード	
＊	D13	WC398800	DIODE	KDS160-RTK			ダイオード	
＊	D14	WC398800	DIODE	KDS160-RTK			ダイオード	
＊	IC1	X5751A00	IC.CPU	UPD16312GB-3B4			ＣＰＵ／周辺ＩＣ	
＊	IC2	XY071A00	IC	HD74HC126FP BUS BU			ロジックＩＣ　フラット	
＊	JK2	WD662100	JACK.PIN	4P JY-2522			ピンジャック　４Ｐ	
	Q1	VP872700	TR	2SC4488 S,T			トランジスタ	
	Q2	VV556400	TR	2SC2412K Q,R,S			トランジスタ	
	Q3	VP872600	TR	2SA1708 S,T			トランジスタ	
	Q10	VV655700	TR.DGT	DTC144EKA			デジタルトランジスタ	01
	Q12	VV655700	TR.DGT	DTC144EKA			デジタルトランジスタ	01
	Q13	VV655300	TR.DGT	DTA144EKA			デジタルトランジスタ	01
	Q14	VV556400	TR	2SC2412K Q,R,S			トランジスタ	
	Q15	VV655700	TR.DGT	DTC144EKA			デジタルトランジスタ	01
	Q16	VV556500	TR	2SA1037K Q,R,S			トランジスタ	
	Q17	VV556500	TR	2SA1037K Q,R,S			トランジスタ	
	R7	HV755470	R.CAR.FP	470Ω 1/4W			不燃化カーボン抵抗	01
	R20	VP940000	R.MTL.OXD	22Ω 1W			酸化金属被膜抵抗	01
⚠	R23	HV753470	R.CAR.FP	4.7Ω 1/4W			不燃化カーボン抵抗	01
	ST1	V4040500	SCR.TERM	M3			スクリュー／ターミナル	
	ST2	V4040500	SCR.TERM	M3			スクリュー／ターミナル	
	SW1	V4757100	SW.TACT	EVQ11A			タクトＳＷ	
	SW2	V4757100	SW.TACT	EVQ11A			タクトＳＷ	
	SW3	V4757100	SW.TACT	EVQ11A			タクトＳＷ	
	SW4	V4757100	SW.TACT	EVQ11A			タクトＳＷ	
	SW5	V4757100	SW.TACT	EVQ11A			タクトＳＷ	
	SW7	V4757100	SW.TACT	EVQ11A			タクトＳＷ	
	U1	V8444900	L.DTCT	GP1UM271XK			リモコン受光ユニット	
＊	V1	WD602800	FL.DSPLY	7-BT-299GNK			螢光表示管	

＊New Parts　＊新規部品（マーク#の部品は、基板に含まれません）

P.C.B. OPERATION & Chip Parts

	Ref. No.	PART NO.	Description		Remarks	Markets	部品名	Rank
＊%		WD890100	SHEET.FL		GD		シート／ＦＬオレンジ	
＊		WD890000	SHEET.FL		SI		シート／ＦＬアオ	

% : Note on the OPERATION P.C.B.
Of the OPERATION P.C.B. part Nos., only the silver (SI) type part Nos. are included in the table.
The only different part between the gold (GD) and silver (SI) type parts is the sheet/FL that is attached to the fluorescent character display tube. When a gold (GD) type OPERATION P.C.B. becomes necessary, order a silver (SI) type OPERATION P.C.B. and a gold (GD) type sheet/FL (WD890100) and replace the sheet/FL of the silver (SI) type OPERATION P.C.B. with the gold (GD) type sheet/FL.

% : OPERATION P.C.B.の注意
OPERATION P.C.B.の部品No.はシルバー(SI)用の部品No.のみを記載しています。
シルバー(SI)とゴールド(GD)の違う部品は、蛍光表示管に貼り付けるシート/FLのみです。
ゴールド(GD)用のOPERATION P.C.B.が必要になった場合は、シルバー(SI)用のOPERATION P.C.B.とゴールド(GD)用のシート/FL(WD890100)を取り寄せ、シート/FLを貼り替えて使用してください。

	US034330	C.CE.M.CHP	0.033uF	16V			チップセラ（Ｂ）	
	US061220	C.CE.M.CHP	22pF	50V			チップセラコン	
	US062100	C.CE.M.CHP	100pF	50V			チップセラコン	
	US063220	C.CE.M.CHP	2200pF	50V			チップセラコン	
	US064100	C.CE.M.CHP	0.01uF	50V			チップセラコン	
	US135100	C.CE.CHP	0.1uF	16V			チップセラコン	
	RD350000	R.CHP	0Ω	1/16W			チップ抵抗	01
	RD354470	R.CHP	47Ω	1/16W			チップ抵抗	01
	RD355100	R.CHP	100Ω	1/16W			チップ抵抗	01
	RD355330	R.CHP	330Ω	1/16W			チップ抵抗	01
	RD355680	R.CHP	680Ω	1/16W			チップ抵抗	01
	RD356100	R.CHP	1KΩ	1/16W			チップ抵抗	01
	RD356330	R.CHP	3.3KΩ	1/16W			チップ抵抗	01
	RD356470	R.CHP	4.7KΩ	1/16W			チップ抵抗	01
	RD357100	R.CHP	10KΩ	1/16W			チップ抵抗	
	RD357220	R.CHP	22KΩ	1/16W			チップ抵抗	01
	RD357330	R.CHP	33KΩ	1/16W			チップ抵抗	01
	RD357470	R.CHP	47KΩ	1/16W			チップ抵抗	01

＊New Parts　＊新規部品（マーク#の部品は、基板に含まれません）

■ EXPLODED VIEW

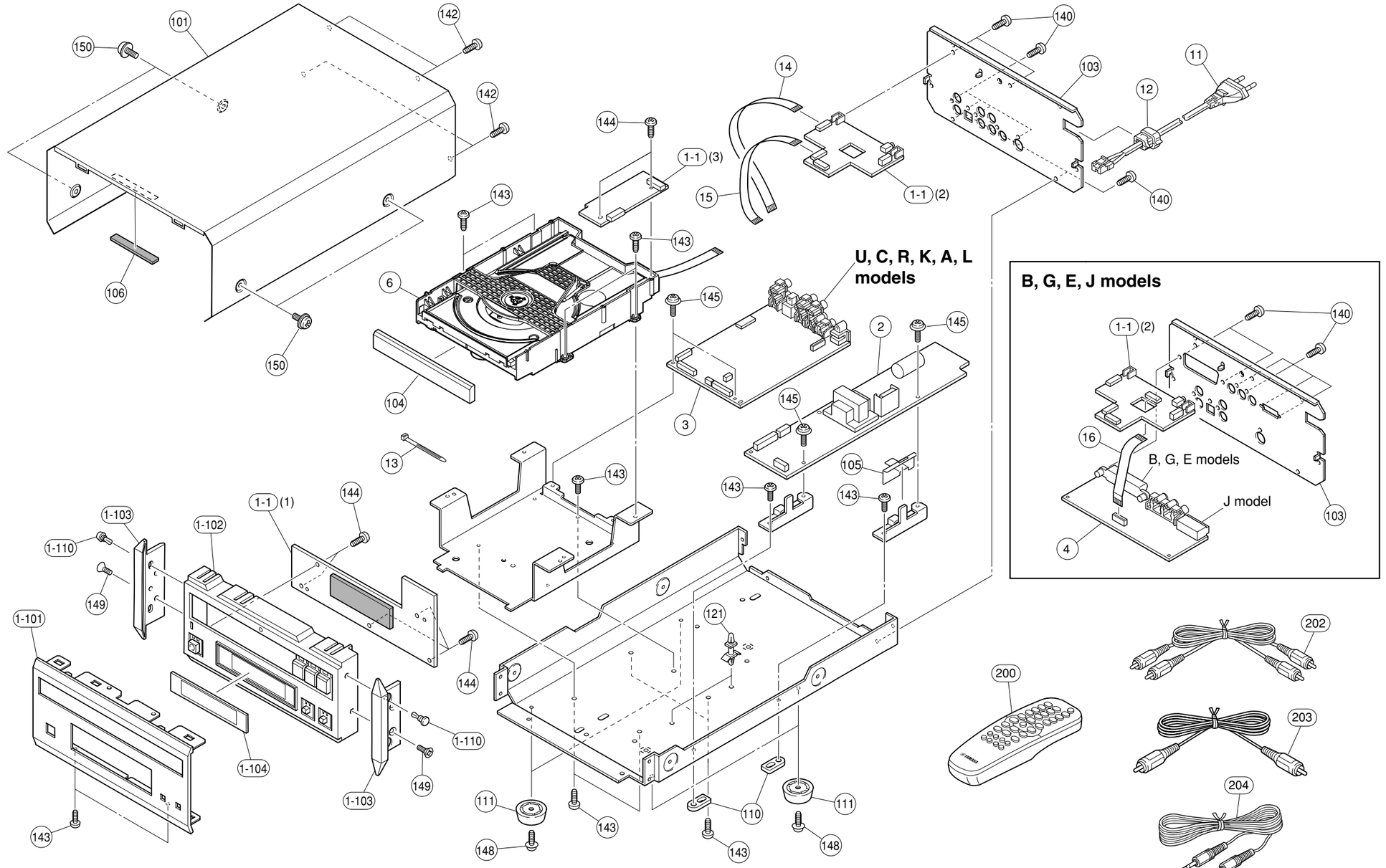

% : Note on the OPERATION P.C.B. (1-1)
Of the OPERATION P.C.B. (1-1) part Nos., only the silver (SI) type part Nos. are included in the table.
The only different part between the gold (GD) and silver (SI) type parts is the sheet/FL that is attached to the fluorescent character display tube. When a gold (GD) type OPERATION P.C.B. (1-1) becomes necessary, order a silver (SI) type OPERATION P.C.B. (1-1) and a gold (GD) type sheet/FL (WD890100) and replace the sheet/FL of the silver (SI) type OPERATION P.C.B. (1-1) with the gold (GD) type sheet/FL.

%：OPERATION P.C.B.(1-1)の注意
OPERATION P.C.B.(1-1)の部品No.はシルバー(SI)用の部品No.のみを記載しています。
シルバー(SI)とゴールド(GD)の違う部品は、蛍光表示管に貼り付けるシート/FLのみです。
ゴールド(GD)用のOPERATION P.C.B.(1-1)が必要になった場合は、シルバー(SI)用のOPERATION P.C.B.(1-1)とゴールド(GD)用のシート/FL(WD890100)を取り寄せ、シート/FLを貼り替えて使用してください。

■ MECHANICAL PARTS

	Ref. No.	PART NO.	Description		Remarks	Markets	部品名	Rank
* %	1-1	WD854900	P.C.B. ASS'Y	OPERATION	SI	JBGE	PCB　オペレーション	
*	1-1	WD921200	P.C.B. ASS'Y	OPERATION	SI	UCRKAL	PCB　オペレーション	
*	1-101	WD608100	FRONT PANEL		GD		フロントパネル	
*	1-101	WD607900	FRONT PANEL		SI		フロントパネル	
*	1-102	WE493500	SUB PANEL-DVD		GD		サブパネルーDVD	
*	1-102	WE493400	SUB PANEL-DVD		SI		サブパネルーDVD	
*	1-103	V8785200	PANEL/SIDE	H100			パネル／サイド	
*	1-104	WD607500	SHEET/WINDOW				シート／ウィンドウ	
	1-110	VQ368600	PUSH RIVET	P3555-B			プッシュリベット	01
*	2	WD853600	POWER SUPPLY UNIT		3132 429 00142	JUC	電源ユニット	
*	2	WD853700	POWER SUPPLY UNIT		3122 429 00122	RKAL	電源ユニット	
*	2	WE435300	POWER SUPPLY UNIT		3122 429 00361	BGE	電源ユニット	
*	3	WD854100	P.C.B. ASS'Y	MONO	3139 248 83861	J	PCB　MONO	
*	3	WD854200	P.C.B. ASS'Y	MONO	3139 248 83881	UCRKAL	PCB　MONO	
*	3	WD854300	P.C.B. ASS'Y	MONO	3139 248 83861	BGE	PCB　MONO	
*	4	WD854500	P.C.B. ASS'Y	VIDEO	3139 248 82672	J	PCB　ビデオ	
*	4	WD854600	P.C.B. ASS'Y	VIDEO	3139 248 82683	BGE	PCB　ビデオ	
*	6	WD882500	DVD MECHANISM UNIT	A97SL	3141 018 03812		DVDメカユニット	
⚠	11	V2723100	POWER CABLE	1.8m		J	電源コード	
* ⚠	11	V9293500	POWER CABLE	2m		UC	電源コード	
⚠	11	WC992700	POWER CABLE	2m		R	電源コード	
* ⚠	11	V8013000	POWER CABLE	2m		K	電源コード	
* ⚠	11	WC743700	POWER CABLE	2m		A	電源コード	
* ⚠	11	VV437300	POWER CABLE	2m		B	電源コード	
* ⚠	11	V9293600	POWER CABLE	2m		GEL	電源コード	
	12	V2438700	CORD STOPPER	10P1			コードストッパー	
	13	VU590000	BINDING TIE	CBTD001B			インシュロックタイ	
*	14	WD877600	FLEXIBLE FLAT CABLE	24P 180mm P=0.5			カード電線　C&C	
*	15	WD877800	FLEXIBLE FLAT CABLE	26P 120mm P=0.5			カード電線　C&C	
*	16	WD877800	FLEXIBLE FLAT CABLE	24P　70mm P=0.5		JBGE	カード電線　C&C	
*	101	V7127400	TOP COVER		GD		トップカバー	
*	101	V7127300	TOP COVER		SI		トップカバー	
*	103	WD690700	REAR PANEL			J	リヤパネル	
*	103	WD690800	REAR PANEL			UC	リヤパネル	
*	103	WD604800	REAR PANEL			R	リヤパネル	
*	103	WD691100	REAR PANEL			K	リヤパネル	
*	103	WD604500	REAR PANEL			A	リヤパネル	
*	103	WD604900	REAR PANEL			BGE	リヤパネル	
*	103	WD690900	REAR PANEL			L	リヤパネル	
*	104	WD607000	LID/DVD		GD		リッド／DVD	
*	104	WD606800	LID/DVD		SI		リッド／DVD	
*	105	WE361000	SHEET/BARRIER				シート／バリヤ	
	106	VP857700	DAMPER	4x6x55			ダンパー	
	110	V7616600	DAMPER				ダンパー	
	111	V3688500	LEG	MO080-MO			レッグ	
*	121	WD894600	SPACER PCB	KGLS-8S			PCBスペーサ	
	140	VN413300	BIND HEAD BONDING B-T. SCREW	3x8　MFZN2BL			ボンディングBタイトネジ	01
	142	EP600830	BIND HEAD B-TIGHT SCREW	3x8　MFC2BL			バインドBタイトネジ	01
	143	EP600250	BIND HEAD B-TIGHT SCREW	3x8　MFZN2Y			バインドBタイトネジ	01
	144	VF617600	PAN HEAD P-TIGHT SCREW	2.6x8　MFC2BL			鉄ナベPタイトネジ	01
	145	VT669300	PW HEAD B-TIGHT SCREW	3x8-8　MFC2			PWヘッドBタイトネジ	
	148	EL300650	PW HEAD B-TIGHT SCREW	3x8-8　MFC2BL			PWヘッドBタイトネジ	01
	149	EP600790	FLAT HEAD B-TIGHT SCREW	3x8　MFZN2BL			皿Bタイトネジ	

＊New Parts　＊新規部品(マーク#の部品は、基板に含まれません)

■ WARNING

- Components having special characteristics are marked ⚠ and must be replaced with parts having specifications equal to those originally installed.
- ⚠印のある部分は、安全確保部品を示しています。部品の交換が必要な場合、パーツリストに記載されている部品を使用してください。

	Ref. No.	PART NO.	Description		Remarks	Markets	部品名	Rank
	150	VY712800	PW HEAD B-TIGHT SCREW	3x8-8　MFNI33			PWヘッドBタイトネジ	
%		WD890100	SHEET/FL ORANGE		GD		シート／FL　オレンジ	
			ACCESSORIES				付属品	
*	200	WD882600	REMOTE CONTROL	3139 248 71873	3139 248 71873		リモコンーDVD	
	202	VY952200	AUDIO PIN CABLE	RD/WH 1m 1pc			ステレオピンケーブル	
	203	VV209200	VIDEO PIN CABLE	YE　1m 1pc			ビデオ用ピンケーブル	
	204	WD865200	SYSTEM CONTROL CABLE	1P　1m 1pc			システムコントロールケーブル	
			BATTERY	SUM-3N 2pcs			乾電池　2PCS	

＊New Parts　＊新規部品(マーク#の部品は、基板に含まれません)

MEMO

DVD-E600

YAMAHA