PortableGrand

DGX-620/YPG-625

SERVICE MANUAL



DGX-620



YPG-625

■ CONTENTS

SPECIFICATIONS 3
PANEL LAYOUT 4
CIRCUIT BOARD LAYOUT & WIRING 6
BLOCK DIAGRAM 8
DISASSEMBLY PROCEDURE 9
LSI PIN DESCRIPTION 20
IC BLOCK DIAGRAM 23
CIRCUIT BOARDS 24
TEST PROGRAM 33
INITIALIZATION 37
USER DATA BACKUP 38
MIDI IMPLEMENTATION CHART 42
MIDI DATA FORMAT 43
PARTS LIST
OVERALL CIRCUIT DIAGRAM

PK 001760

YAMAHA

HAMAMATSU, JAPAN

Copyright (c) Yamaha Corporation. All rights reserved. PDF KM ⓘ '06.03

IMPORTANT NOTICE

This manual has been provided for the use of authorized Yamaha Retailers and their service personnel. It has been assumed that basic service procedures inherent to the industry, and more specifically Yamaha Products, are already known and understood by the users, and have therefore not been restated.

WARNING: Failure to follow appropriate service and safety procedures when servicing this product may result in personal injury, destruction of expensive components and failure of the product to perform as specified. For these reasons, we advise all Yamaha product owners that all service required should be performed by an authorized Yamaha Retailer or the appointed service representative.

IMPORTANT: This presentation or sale of this manual to any individual or firm does not constitute authorization certification, recognition of any applicable technical capabilities, or establish a principal-agent relationship of any form.

The data provided is believed to be accurate and applicable to the unit(s) indicated on the cover. The research engineering, and service departments of Yamaha are continually striving to improve Yamaha products. Modifications are, therefore, inevitable and changes in specification are subject to change without notice or obligation to retrofit. Should any discrepancy appear to exist, please contact the distributor's Service Division.

WARNING: Static discharges can destroy expensive components. Discharge any static electricity your body may have accumulated by grounding yourself to the ground bus in the unit (heavy gauge black wires connect to this bus.)

IMPORTANT: Turn the unit OFF during disassembly and parts replacement. Recheck all work before you apply power to the unit.

WARNING: CHEMICAL CONTENT NOTICE!

The solder used in the production of this product contains LEAD. In addition, other electrical/electronic and/or plastic (Where applicable) components may also contain traces of chemicals found by the California Health and Welfare Agency (and possibly other entities) to cause cancer and/or birth defects or other reproductive harm.

DO NOT PLACE SOLDER, ELECTRICAL/ELECTRONIC OR PLASTIC COMPONENTS IN YOUR MOUTH FOR ANY REASON WHAT SO EVER!

Avoid prolonged, unprotected contact between solder and your skin! When soldering, do not inhale solder fumes or expose eyes to solder/flux vapor!

If you come in contact with solder or components located inside the enclosure of this product, wash your hands before handling food.

■ WARNING

Components having special characteristics are marked ⚠ and must be replaced with parts having specification equal to those originally installed.

■ SAVING DATA

Saving and backing up your data



Be sure to perform it

The panel settings and some other types of data are not retained in memory when you turn off the power to the instrument. Save data you want to keep to the Registration Memory.
Saved data may be lost due to malfunction or incorrect operation.
Save important data to a USB storage device/or other external device such as a computer.

Backing up the USB storage device/external media



Be sure to perform it

To protect against data loss through media damage, we recommend that you save your important data onto two USB storage devices/external media.

■ SPECIFICATIONS

Keyboards
- 88 Graded Hammer Standard keys (A-1–C7), with Touch Response.

Display
- 320 x 240 dots LCD display (backlit)

Setup
- STANDBY/ON
- MASTER VOLUME: MIN–MAX
- LCD CONTRAST

Panel Controls
- SONG, VOICE, STYLE, EASY SONG ARRANGER, P.A.T. ON/OFF, LESSON L, LESSON R, LESSON START, METRONOME ON/OFF, PORTABLE GRAND, DEMO, FUNCTION, MUSIC DATABASE, HARMONY ON/OFF, DUAL ON/OFF, SPLIT ON/OFF, TEMPO/TAP, [0]–[9], [+], [-], CATEGORY, Dial, REPEAT & LEARN (ACMP ON/OFF), A-B REPEAT (INTRO/ENDING/rit.), PAUSE (SYNC START), START/STOP, REW (MAIN/AUTO FILL), FF (SYNC STOP), REGIST MEMORY ([MEMORY/BANK], [1], [2]), SONG MEMORY (REC, [1]–[5], [A]), File Control [MENU], File Control [EXECUTE], [EXIT], [LYRICS], [SCORE], [CHORD FINGERING]

Realtime Control
- Pitch Bend Wheel

Voice
- 127 panel voices + 12 drum/SFX kits + 361 XGlite voices
- Polyphony: 32
- DUAL
- SPLIT

Style
- 150 Preset Styles + 1 User Style File
- Style Control: ACMP ON/OFF, SYNC STOP, SYNC START, START/STOP, INTRO/ENDING/rit., MAIN/AUTO FILL
- Fingering: Multi Finger, Full Keyboard
- Style Volume

Music Database
- 267

Education Feature
- Dictionary
- Lesson 1–3, Repeat & Learn

Registration Memory
- 8 banks x 2 types

Function
- VOLUME: Style Volume, Song Volume
- OVERALL: Tuning, Transpose, Split Point, Touch Sensitivity, Pitch Bend Range, Chord Fingering
- MAIN VOICE: Volume, Octave, Pan, Reverb Level, Chorus Level
- DUAL VOICE: Volume, Octave, Pan, Reverb Level, Chorus Level
- SPLIT VOICE: Volume, Octave, Pan, Reverb Level, Chorus Level
- EFFECT: Reverb Type, Chorus Type, Master EQ Type, Sustain
- HARMONY: Harmony Type, Harmony Volume
- Performance assistant technology: Performance assistant technology Type
- PC: PC Mode
- MIDI: Local On/Off, External Clock, Initial Send, Keyboard Out, Style Out, Song Out
- METRONOME: Time Signature Numerator, Time Signature Denominator, Metronome Volume
- SCORE: Quantize
- LESSON: Lesson Track (R), Lesson Track (L), Grade
- UTILITY: Demo Cancel, Language

Effects
- Reverb: 9 types
- Chorus: 4 types
- Harmony: 26 types

Song
- 30 Preset Songs + 5 User Songs + Accessory CD-ROM Songs (70)
- Song Clear, Track Clear
- Song Volume
- Song Control: REPEAT & LEARN, A-B REPEAT, PAUSE, REW, FF, START/STOP

Performance assistant technology
- Chord, Chord/Free, Melody, Chord/Melody

Recording
- Song
  User Song: 5 Songs
  Recording Tracks: 1, 2, 3, 4, 5, STYLE

MIDI
- Local On/Off
- Initial Send
- External Clock
- Keyboard Out
- Style Out
- Song Out

Auxiliary jacks
- PHONES/OUTPUT, DC IN 12V, USB TO HOST, USB TO DEVICE, SUSTAIN

Ampli er
- 6W + 6W

Speakers
- 12cm x 2 + 3cm x 2

Power Consumption
- 22W

Power Supply
- Adaptor: Yamaha PA-5D AC power adaptor

Dimensions (W x D x H)
- 1,398 x 457 x 153 mm (55-1/16" x 18" x 6")
- with keyboard stand:
  1,405 x 485 x 773 mm (55-1/3" x 19-1/8" x 30-3/8")

Weight
- 18.0kg (39 lbs. 11 oz.)
- with keyboard stand:
  25.5kg (56 lbs. 3 oz.)

Supplied Accessories
- Music Rest
- Accessory CD-ROM
- Keyboard Stand
- Owner's Manual
- Footswitch FC5
- AC Power adaptor (May not be included depending on your particular area.)

Optional Accessories
- Headphones: HPE-150

■ PANEL LAYOUT

• Front Panel

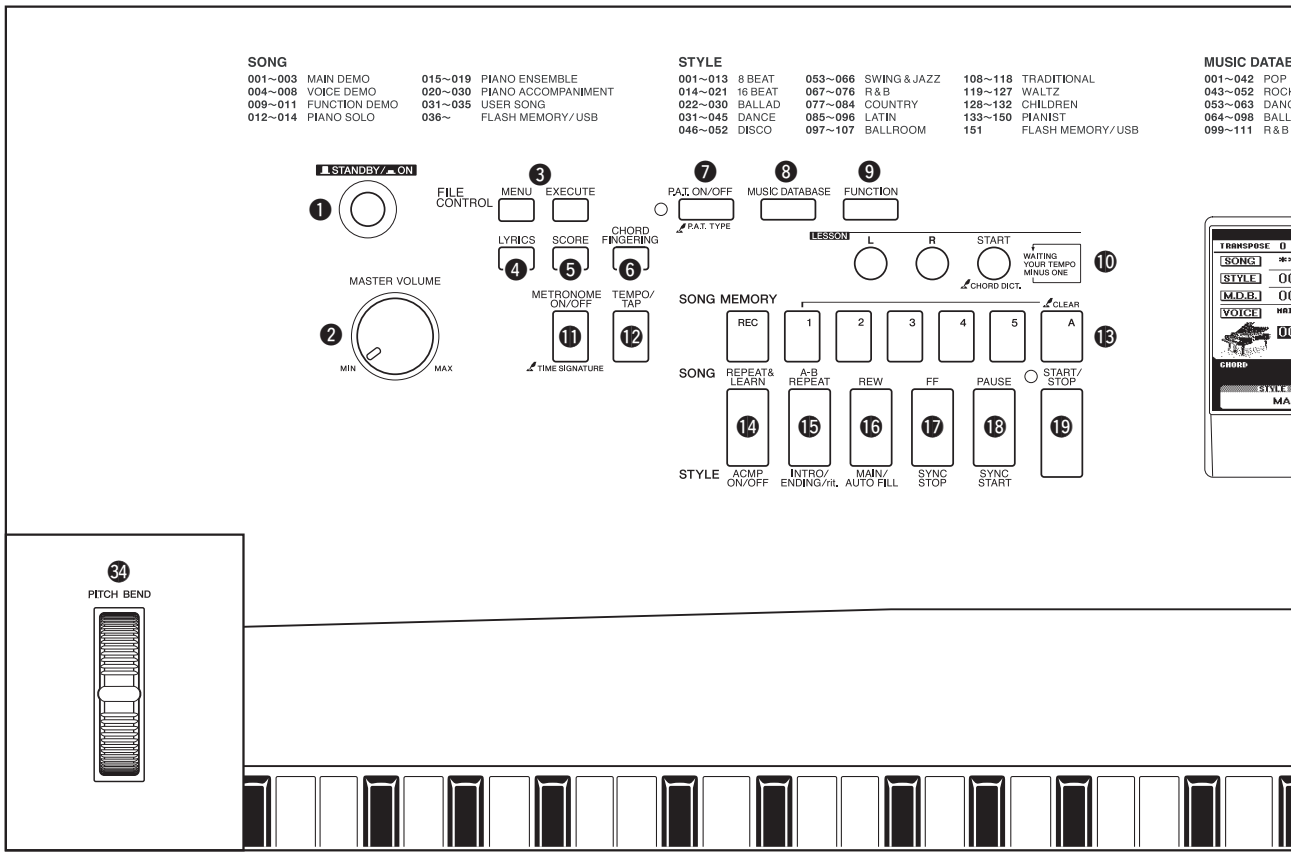

• Front Panel

❶ [STANDBY/ON] switch
❷ [MASTER VOLUME control
❸ FILE CONTROL [MENU], [EXECUTE] button
❹ [LYRICS] button
❺ [SCORE] button
❻ [CHORD FINGERING] button
❼ [P.A.T. ON/OFF] button
❽ [MUSIC DATABASE] button
❾ [FUNCTION] button
❿ LESSON [L],[R], [START] buttons
⓫ [METRONOME ON/OFF] button
⓬ [TEMPO/TAP] button
⓭ SONG MEMORY [REC], [1]-[5], [A] buttons
⓮ [REPEAT & LEARN]/ [ACMP ON/OFF] button
⓯ [A-B REPEAT]/[INTRO/ENDING/rit.] button
⓰ [REW]/[MAIN/AUTO FULL] button
⓱ [FF]/[SYNC STOP] button
⓲ [PAUSE]/[SYNC START] button
⓳ [START/STOP] button
⓴ [SONG] button
㉑ [EASY SONG] ARRANGER] button
㉒ [STYLE] button
㉓ [VOICE] button

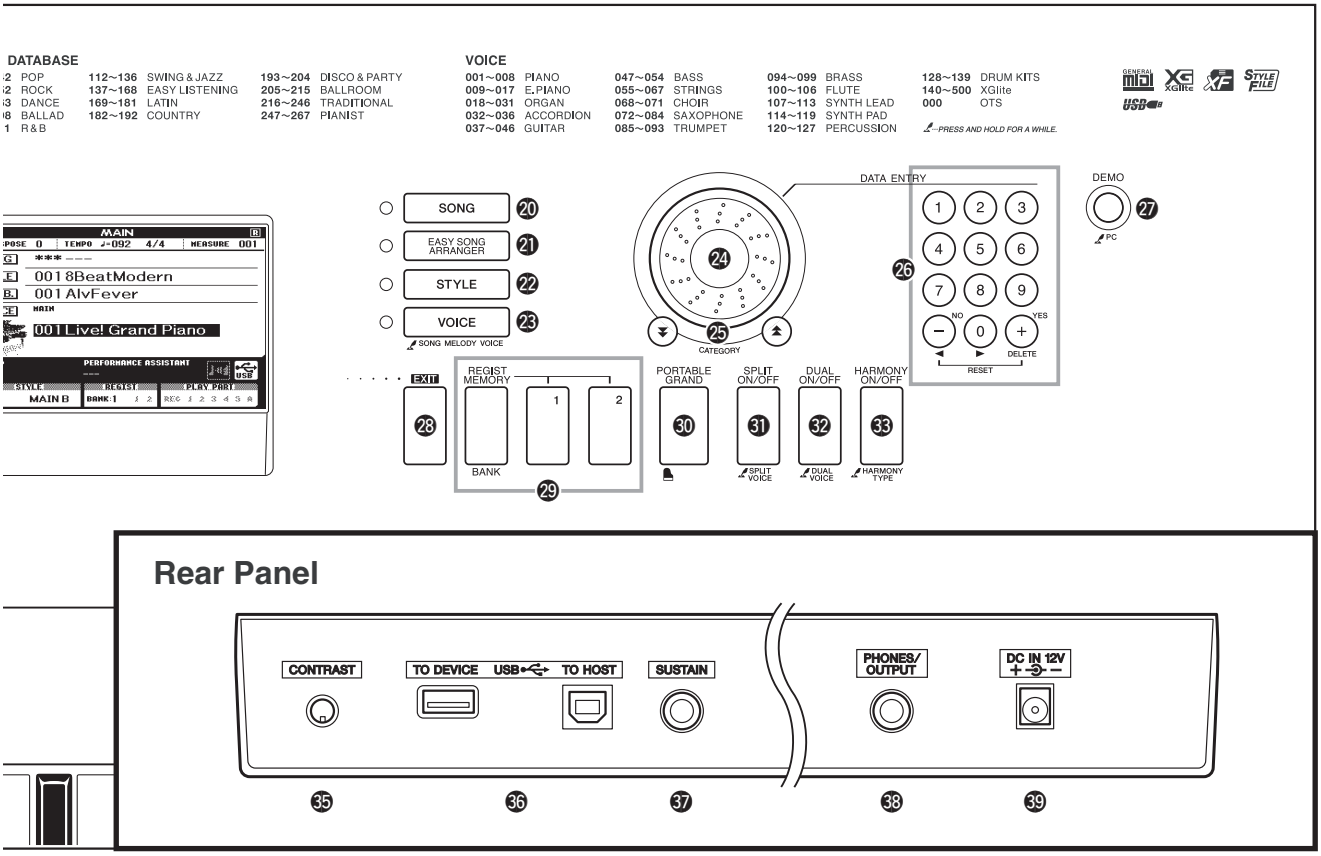

• Rear Panel

㉟ CONTRAST knob
㊱ USB TO DEVICE, TO HOST terminals
㊲ SUSTAIN jack
㊳ PHONES/OUTPUT jack
㊴ DC IN 12V jack

㉔ Dial
㉕ CATEGORY[▲] and [▼] buttons
㉖ Number buttons [0]–[9],[+] and [-] buttons
㉗ [DEMO] button
㉘ [EXIT] button
㉙ REGIST MEMORY [MEMORY/BANK], [1], [2] buttons
㉚ [PORTABLE GRAND] button
㉛ [SPLIT ON/OFF] button
㉜ [DUAL ON/OFF] button
㉝ [HARMONY ON/OFF] button
㉞ [PITCH BEND] wheel

■ CIRCUIT BOARDS LAYOUT & WIRING

• Upper case

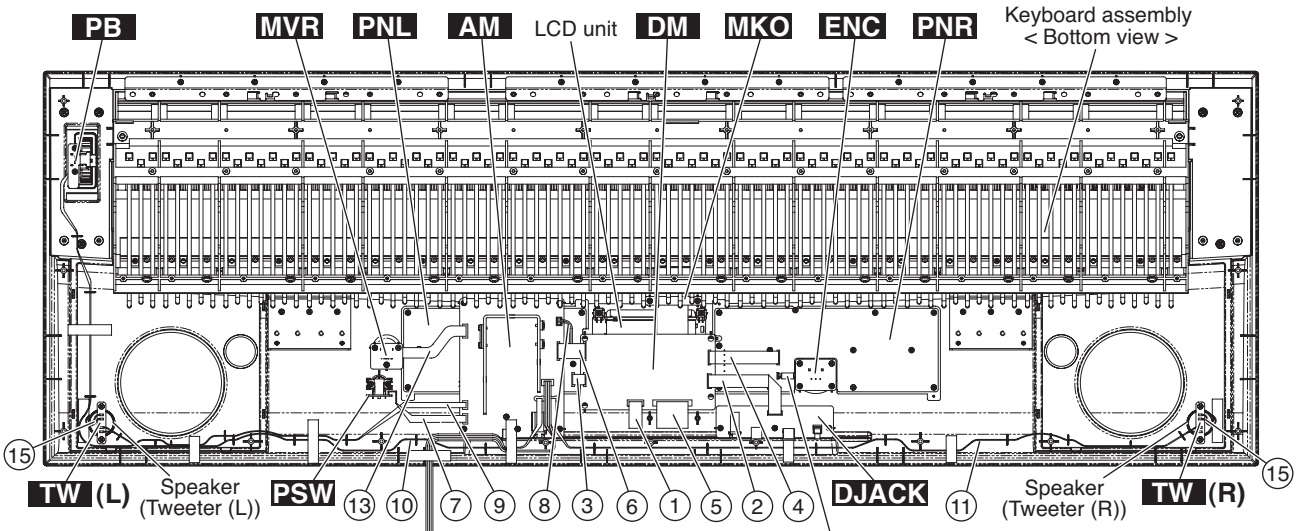

• Lower case

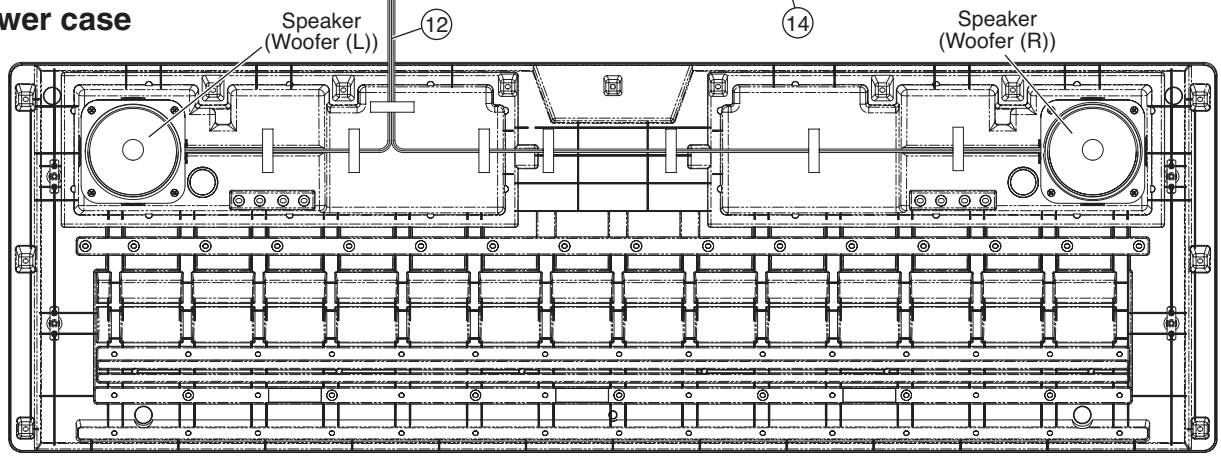

• Keyboard assembly

< Top view >

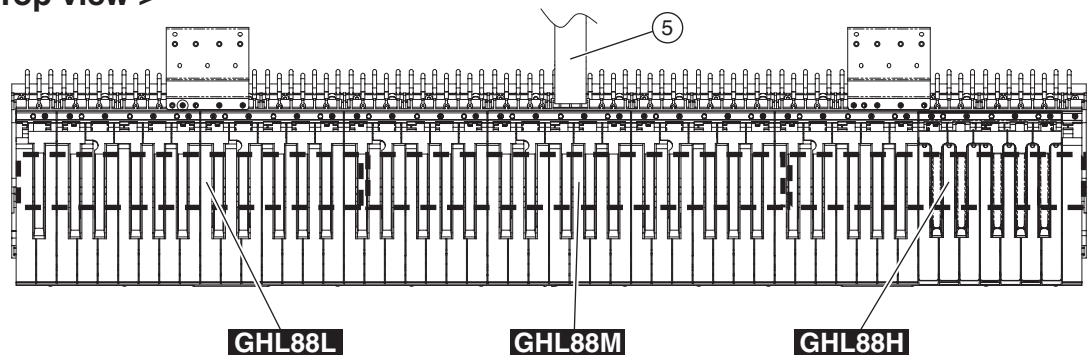

No.	Location	Part No.	Connector Assembly		Destination					Remarks
①	--	--	Flexible flat cable	DM-CN201	*1	*4	LCD	*3	*4	14P
②	240	WG317700	Flexible flat cable	DM-CN301	*1	*4	DJACK-CN301	*1	*4	14P
③	230	WG317600	Flexible flat cable	DM-CN601	*1	*4	PNL-CN01	*1	*4	12P
④	250	WG317800	Flexible flat cable	DM-CN602	*1	*4	PNR-CN02	*1	*4	15P
⑤	2	WG318100	Flexible flat cable	DM-CN701	*1	*4	GHL88M-CN02	*1	*4	27P
⑥	260	WG317900	Flexible flat cable	DM-CN901	*1	*4	AM-CN104	*1	*4	19P
⑦	WH501	(WG45930)	PSW	AM-CN101	*1	*5	PSW-CN501	*2	*5	4P
⑧	290	WB092100	BL	AM-CN102	*1	*5	LCD	*3	*6	2P
⑨	WH401	(WG46060)	PB	AM-CN103	*1	*5	PB-CN401	*2	*5	3P
⑩	WH201	(WG46040)	TWL	AM-CN201	*2	*5	TW(L)	*3	*6	2P
⑪	WH202	(WG46050)	TWR	AM-CN202	*2	*5	TW(R)	*3	*6	2P
⑫	30	(WG45880)	SP2	AM-CN203	*1	*9	Speaker Lch Speaker Rch	*3 *3	*9 *10	4P
⑬	WH601	(WG46070)	MVR	AM-CN204	*1	*5	MVR-CN601	*2	*5	5P
⑭	WH901	(WB09270)	ENC	PNR-CN03	*1	*5	ENC-CN901	*2	*5	3P
⑮	--	--	--	Speaker	*11	--	TW	*3	*10	2P X0159A00

* The parts with "( )" in "Part No." are not available as spare parts.
* 1 : Installation
* 2 : Dip soldering
* 3 : Manual soldering
* 4 : The conductor of a cable and the point of contact of a connector are untited.
* 5 : Edge mark is adjusted to Pin 1 (△) side.
* 6 : Edge mark is connected to + side.
* 7 : Edge mark is connected to + terminal.
* 8 : White wire is adjusted to Pin 1 (△) side.
* 9 : White wire is connected to + terminal.
* 10 : Red wire is connected to + terminal.
* 11 : Connected

Caution: Be sure to attach the removed filament tape just as it was before removal.

■ BLOCK DIAGRAM

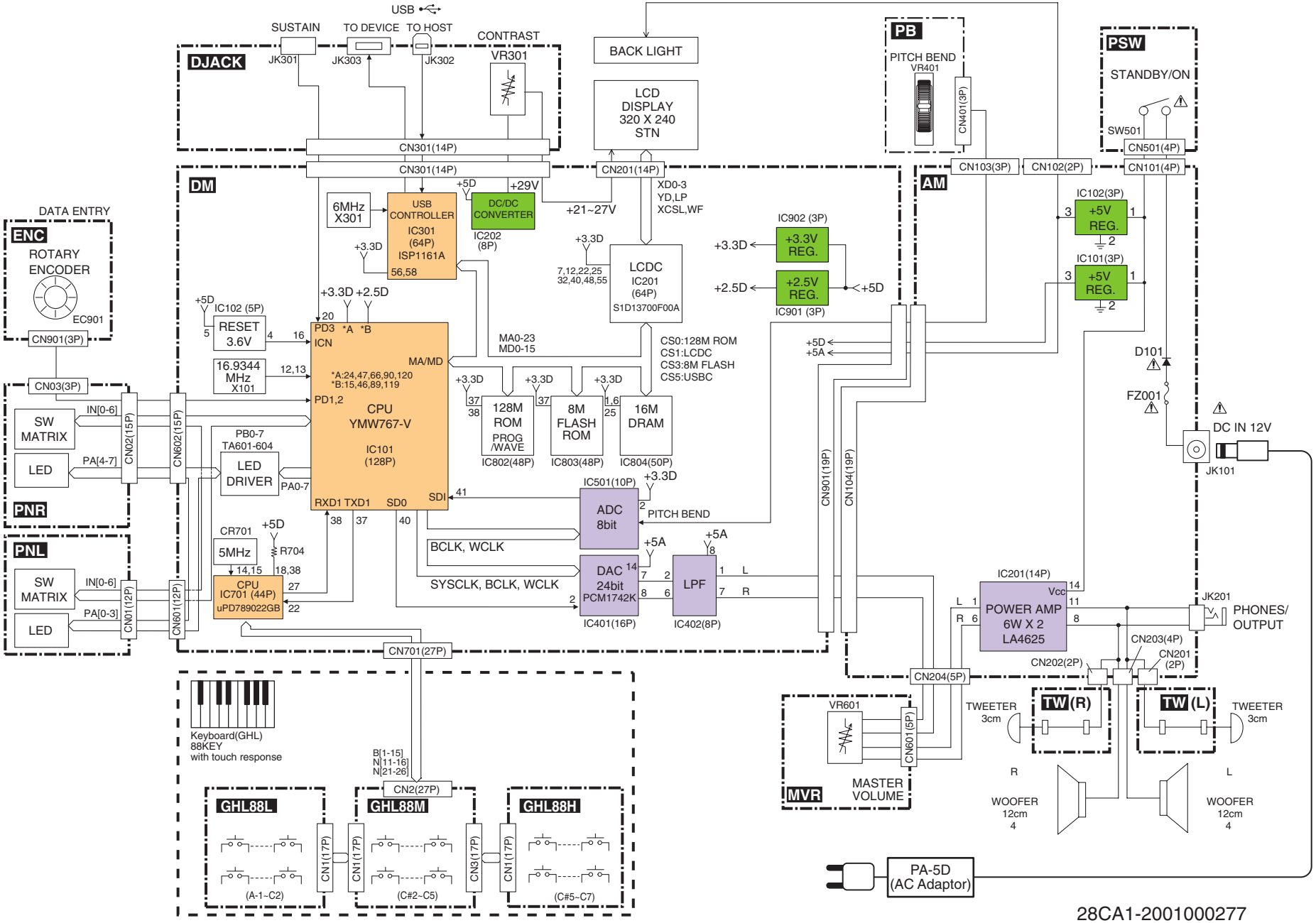

28CA1-2001000277

■ DISASSEMBLY PROCEDURE

Caution: **1) Flat cable's contacts are visible from the back.**
Pay attention not to insert and install the cable to the connector inversely. (Fig.1)
2) Be sure to attach the removed filament tape just as it was before removal.

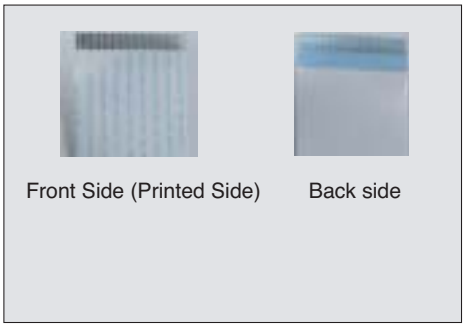

(Fig.1)

1. Lower Case Assembly (Time required: About 9 minutes)

1-1 Remove the twenty (20) screws marked [510A]. The bottom boards L and R can then be removed. (Fig.2)

1-2 Remove the thirty six (36) screws marked [500] and the forty six (46) screws marked [510B]. The lower case assembly can then be removed. (Fig.3)

<Bottom View>

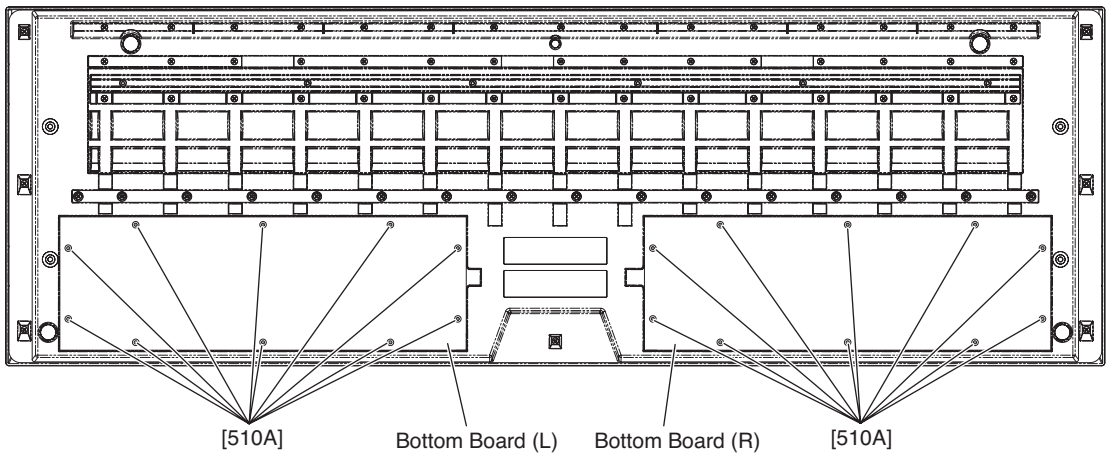

(Fig.2)

[510]: Bind Head Tapping Screw-B 4.0X16 MFZN2W3 (WF154100)

<Bottom View>

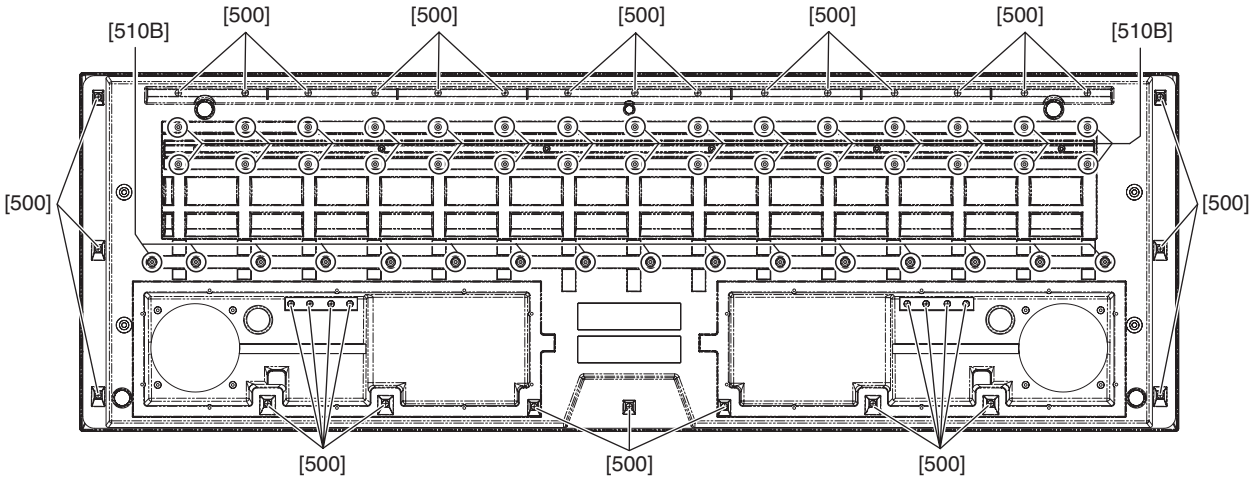

(Fig.3)

[500]: Bind Head Tapping Screw-B 4.0X12 MFZN2W3 (WE981200)
[510]: Bind Head Tapping Screw-B 4.0X16 MFZN2W3 (WF154100)

2. DM Circuit Board (Time required: About 10 minutes)

2-1 Remove the lower case assembly. (See procedure 1.)

2-2 Remove the four (4) screws marked [480A].
The DM circuit board can then be removed. (Fig.4)

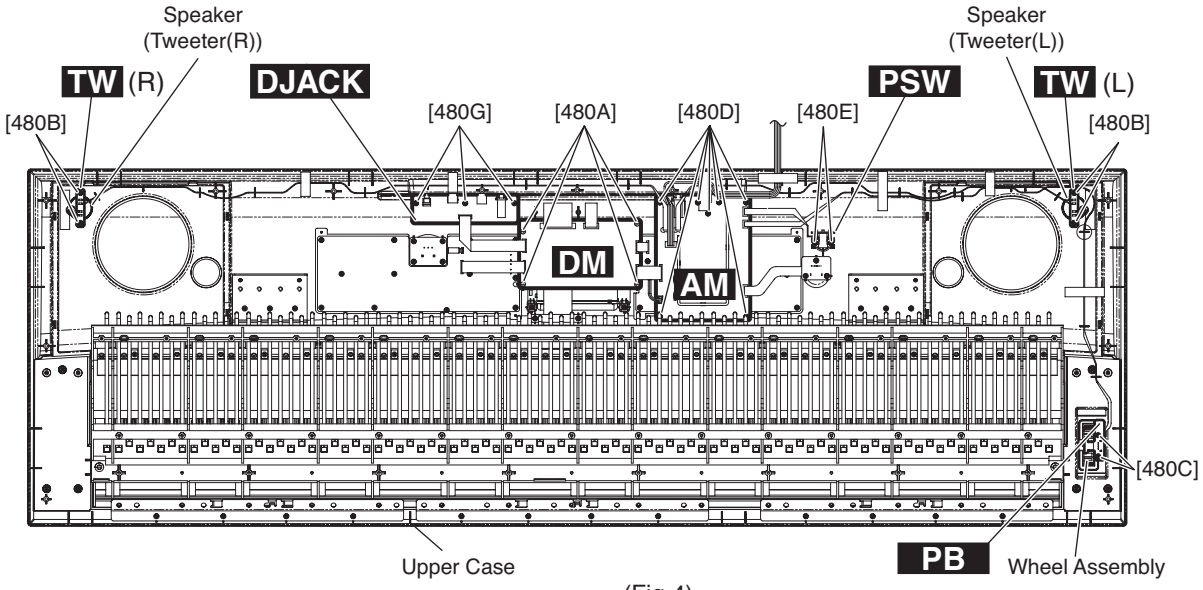

(Fig.4)

[480]: Bind Head Tapping Screw-B 3.0X8 MFZN2W3 (WE774300)

3. TW Circuit Board, Speaker (Tweeter) (Time required: About 9 minutes)

3-1 Remove the lower case assembly. (See procedure 1.)

3-2 Remove the two (2) screws marked [480B]. The TW circuit board and speaker (tweeter) can then be removed. (Fig.4)

* *The left and right speakers (tweeters) can be removed in the same way.*

4. PB Circuit Board, Wheel Assembly (Time required: About 9 minutes)

4-1 Remove the lower case assembly. (See procedure 1.)

4-2 Remove the two (2) screws marked [480C]. The PB circuit board and the wheel assembly can then be removed. (Fig.4)

* *Make sure to mount the wheel assembly on the volume shaft of the PB circuit board by firmly inserting it into the shaft.*

5. AM Circuit Board (Time required: About 10 minutes)

5-1 Remove the lower case assembly. (See procedure 1.)

5-2 Remove the seven (7) screws marked [480D]. The AM circuit board can then be removed. (Fig.4)

6. PSW Circuit Board (Time required: About 9 minutes)

6-1 Remove the lower case assembly. (See procedure 1.)

6-2 Remove the two (2) screws marked [480E].
The PSW circuit board can then be removed. (Fig.4)

7. DJACK Circuit Board (Time required: About 10 minutes)

7-1 Remove the lower case assembly. (See procedure 1.)

7-2 Remove the three (3) screws marked [480G].
The DJACK circuit board can then be removed. (Fig.4)

8. ENC Circuit Board
(Time required: About 10 minutes)

8-1 Remove the lower case assembly. (See procedure 1.)

8-2 Remove the encoder knob from the control panel. (Fig.5)

8-3 Remove the four (4) screws marked [480H]. The ENC circuit board can then be removed. (Fig.6)

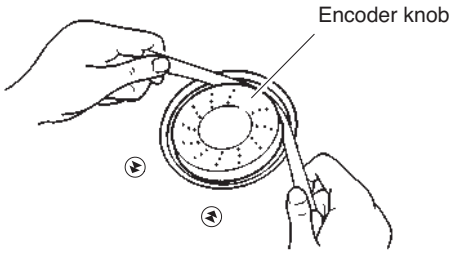

(Fig.5)

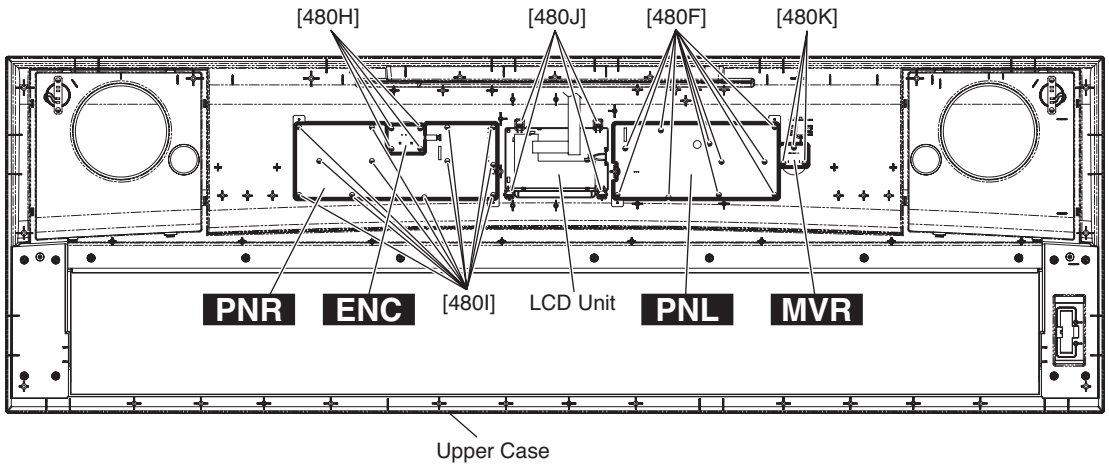

(Fig.6)

[480]: Bind Head Tapping Screw-B 3.0X8 MFZN2W3 (WE774300)

9. PNR Circuit Board
(Time required: About 11 minutes)

9-1 Remove the lower case assembly. (See procedure 1.)

9-2 Remove the twelve (12) screws marked [480I]. The PNR circuit board can then be removed. (Fig.6)

10. MVR Circuit Board
(Time required: About 10 minutes)

10-1 Remove the lower case assembly. (See procedure 1.)

10-2 Remove the volume knob from the control panel. (Fig.7)

10-3 Remove the three (3) screws marked [480K]. The MVR circuit board can then be removed. (Fig.6)

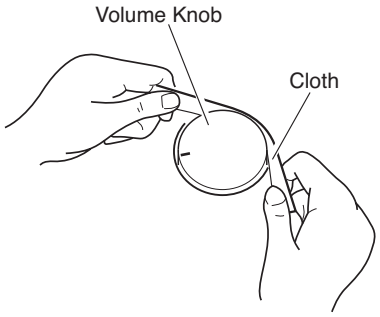

(Fig.7)

11. PNL Circuit Board
(Time required: About 12 minutes)

11-1 Remove the lower case assembly. (See procedure 1.)

11-2 Remove the AM circuit board. (See procedure 5.)

11-3 Remove the ten (10) screws marked [480F]. The PNL circuit board can then be removed. (Fig.6)

12. LCD Unit (Time required: About 11 minutes)

12-1 Remove the lower case assembly. (See procedure 1.)

12-2 Remove the DM circuit board. (See procedure 2.)

12-2 Remove the four (4) screws marked [480J]. The LCD unit can then be removed. (Fig.6)

13. Speaker (Woofer) (Time required: About 10 minutes)

13-1 Remove the lower case assembly. (See procedure 1.)

13-2 Remove the four (4) screws marked [40]. The speaker (woofer) can then be removed. (Fig.8)

* *The left and right speakers (woofers) can be removed in the same way.*

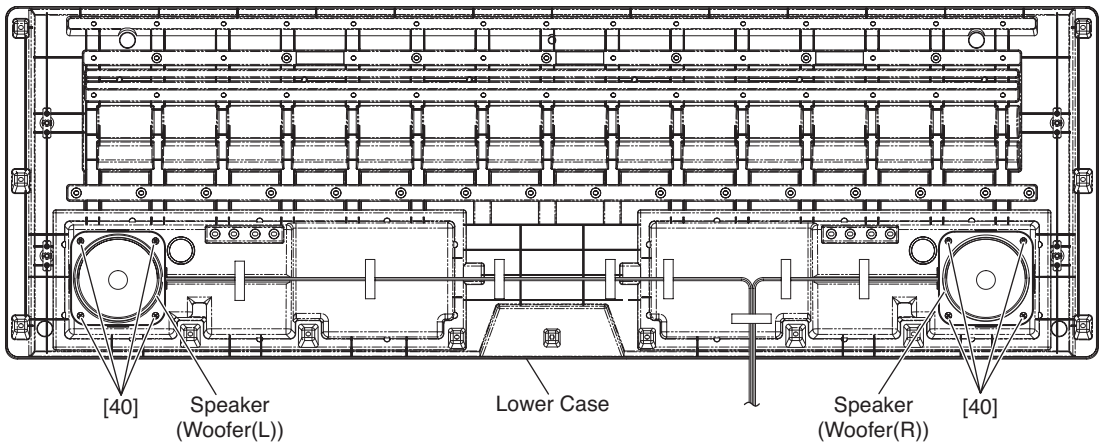

(Fig.8)

[40]: Bind Head Tapping Screw-B 4.0X12 MFZN2W3 (WE981200)

14. Keyboard Assembly (Time required: About 13 minutes)

14-1 Remove the lower case assembly. (See procedure 1.)

14-2 Remove the six (6) screws marked [480L], the twelve (12) screws marked [480M] and the eight (8) screws marked [560]. The keyboard assembly can then be removed from the upper case assembly. (Fig.9)

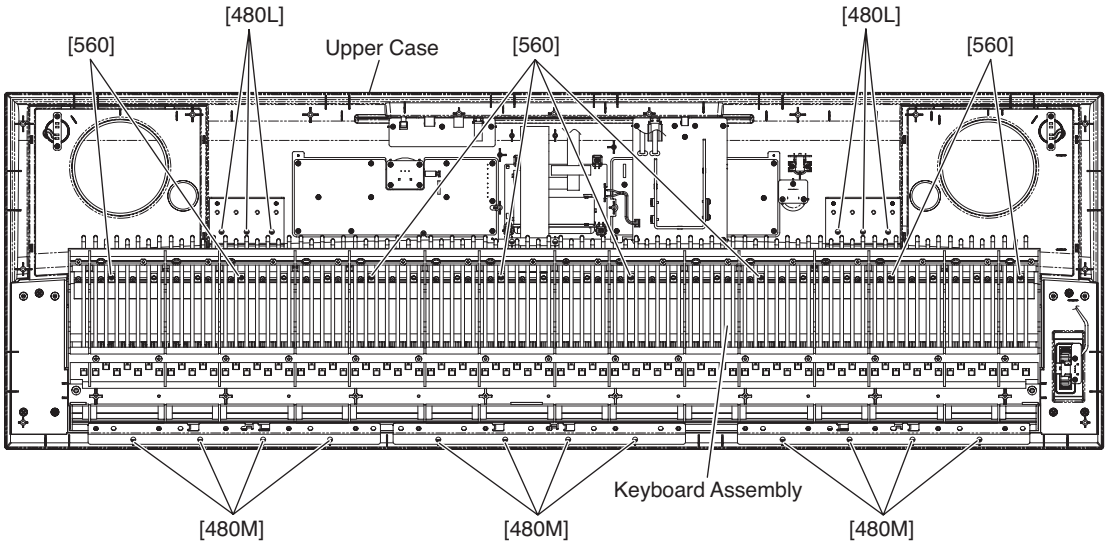

(Fig.9)

[480]: Bind Head Tapping Screw-B 3.0X8 MFZN2W3 (WE774300)
[560]: Bind Head Tapping Screw-B 3.0X20 MFZN2W3 (WF489300)

15. Disassembling the Keyboard Assembly

15-1 White key assembly and black key assembly

Remove the four (4) screws marked [270A] fixing the black and white key assembly for one octave (C-B).
To remove the back of the black and white key assembly of each octave, while pushing the end lug of white keys rearward and lifting the back of keys, slide the black and white key assembly towards you. (Fig.10, Fig.11)

15-2 When removing white keys numbered as A-1 and B-1 key and black key, remove two (2) screws marked [270B] and then lift the back of the keys and slide the black and white keys towards you. (Fig.10)

15-3 When removing the C7 key, remove a screw marked [270C] and then lift the back of C7 key and slide it towards you. (Fig.10)

Note: When removing white key assembly and black key assembly, be careful not to allow grease to attach to the circuit board and rubber contacts, etc. (Fig.11)

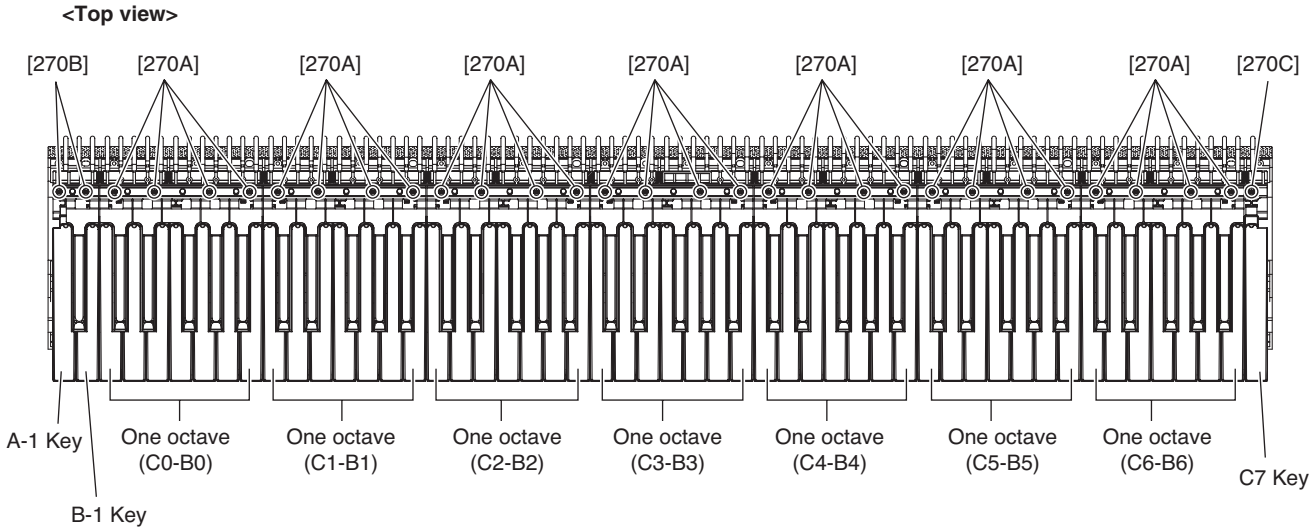

(Fig.10)

[270]: Bind Head Tapping Screw-P 3.0X16 MFZN2W3 (WE973000)

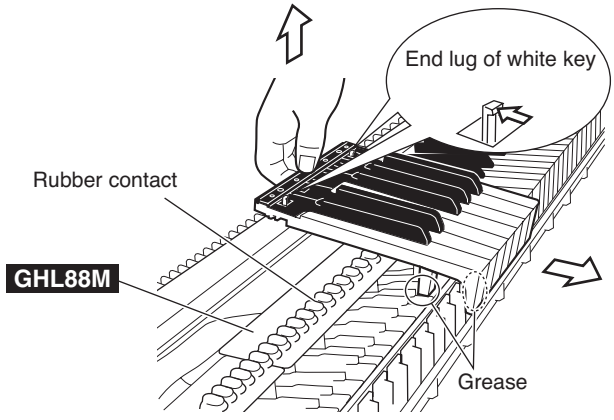

(Fig.11)

15-4 **Actuate Rubber**

Remove the actuate rubber. (Fig.12)

15-5 **Rubber Contact**

Remove the black and white key assembly for two octaves related to the subject rubber contact. The rubber contact can then be removed. (Fig.13, Fig.14)

* *Note that the rubber contact has a specific installation direction.*

* *One rubber contact fits for C#-C (for C-B keys).*

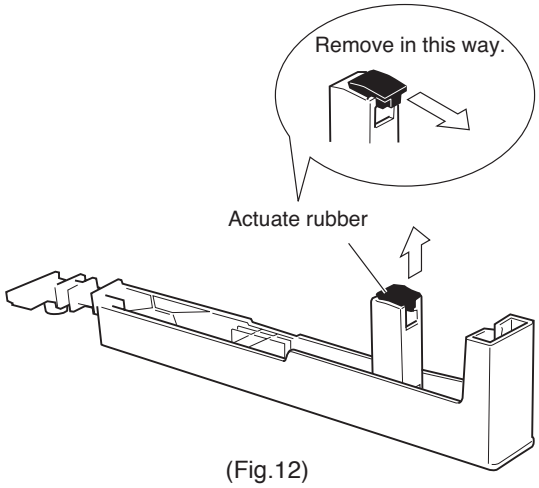

(Fig.12)

<Top View>

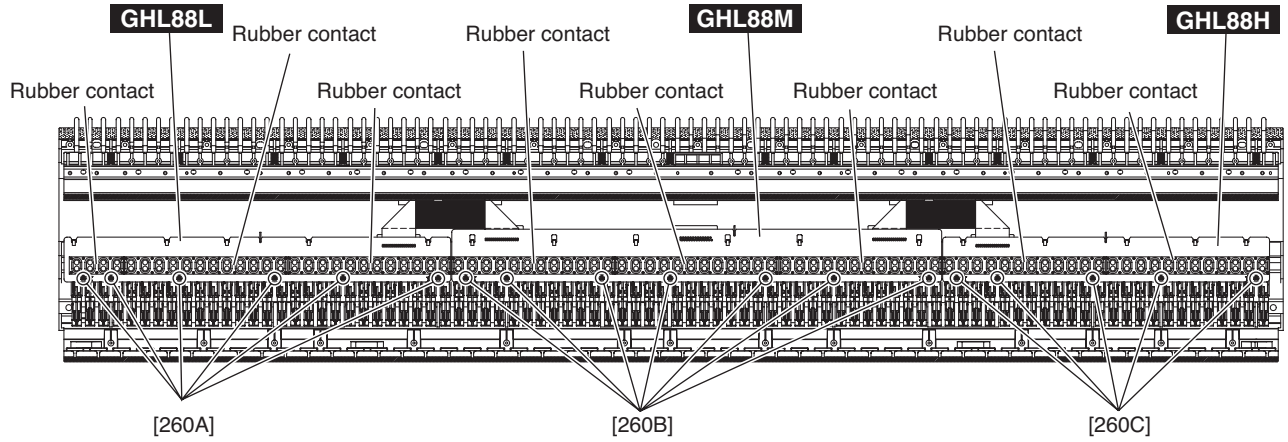

(Fig.13)

[260]: Bind Head Tapping Screw-P 2.6X8 MFZN2W3 (WF267300)

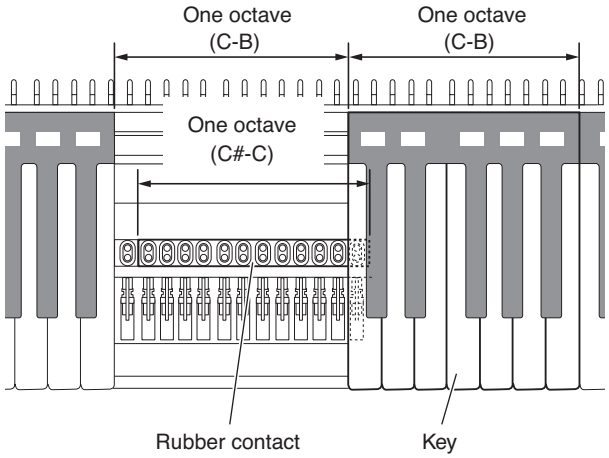

To remove the rubber contact for one octave, keys for 2 octaves need to be removed.

(Fig.14)

15-6 **GHL88L Circuit Board**

Remove the black and white key assembly (A1-B2). (See procedure 15-1.)

Remove the six (6) screws marked [260A]. The GHL88L circuit board can then be removed. (Fig.13)

15-7 **GHL88M Circuit Board**

Remove the black and white key assembly (C1-B5). (See procedure 15-1.)

Remove the seven (7) screws marked [260B]. The GHL88M circuit board can then be removed. (Fig.13)

Detach the filament tape and disconnect the FFC cable. (Fig.15)

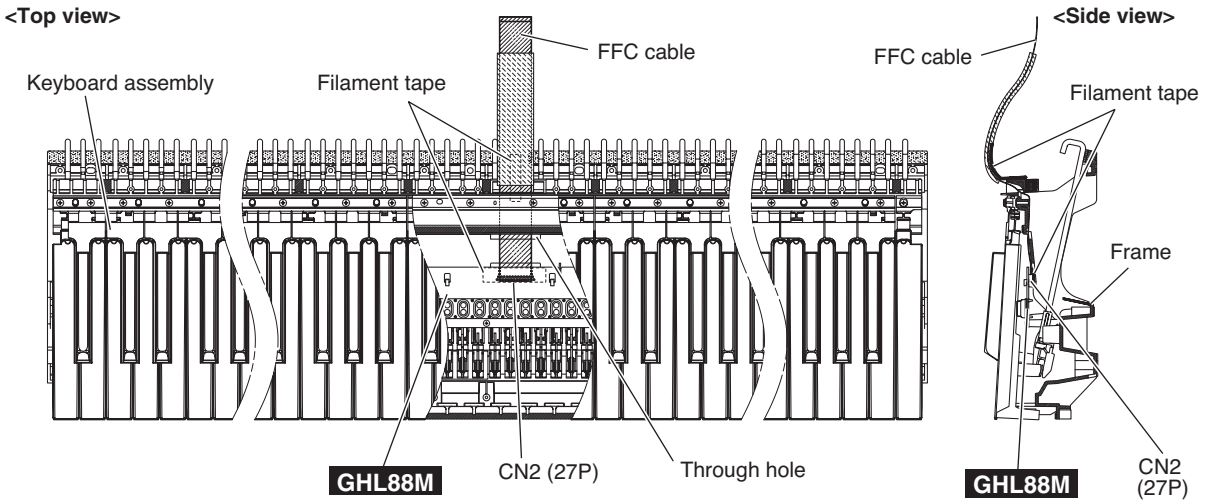

(Fig.15)

15-8 **GHL88H Circuit Board**

Remove the black and white key assembly (C5-C7). (See procedure 15-1.)

Remove the five (5) screws marked [260C]. The GHL88H circuit board can then be removed. (Fig.13)

15-9 **Hammer (White Key), (Black Key)**

Remove the black and white key assembly for the related keys.

With the key frame placed upside down, push the hammer forward from the rear, then a click sound is heard and the hammer bearing section can be removed from the hammer axis of the key frame.

Take out the hammer sideways. (Fig.16, Fig.17)

* *When removing the hammer, take care not to cause damage to the hammer bearing and its claw.*

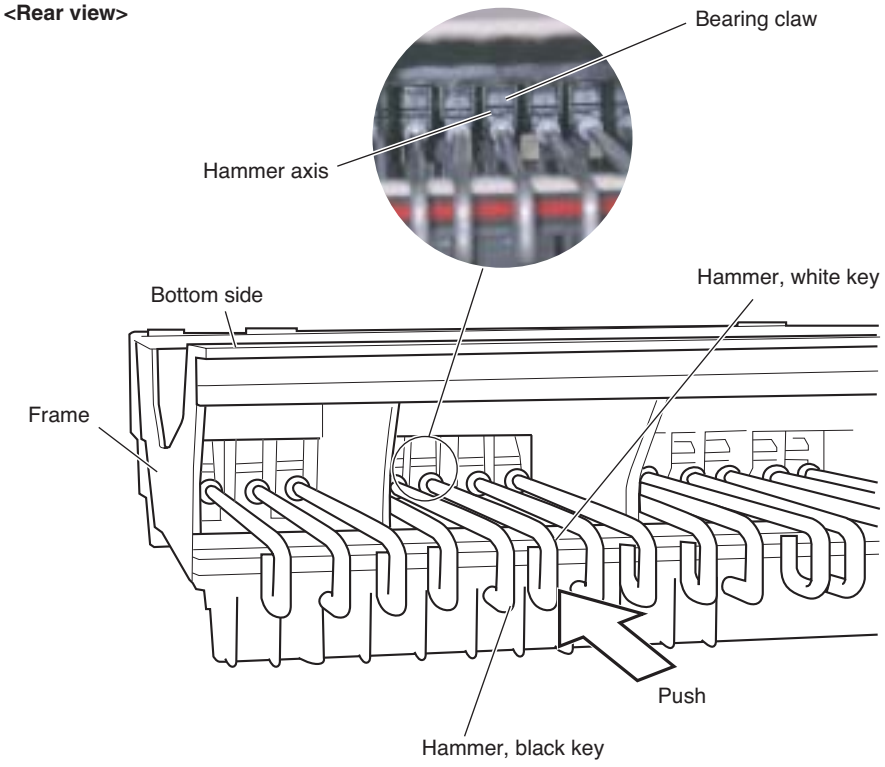

(Fig.16)

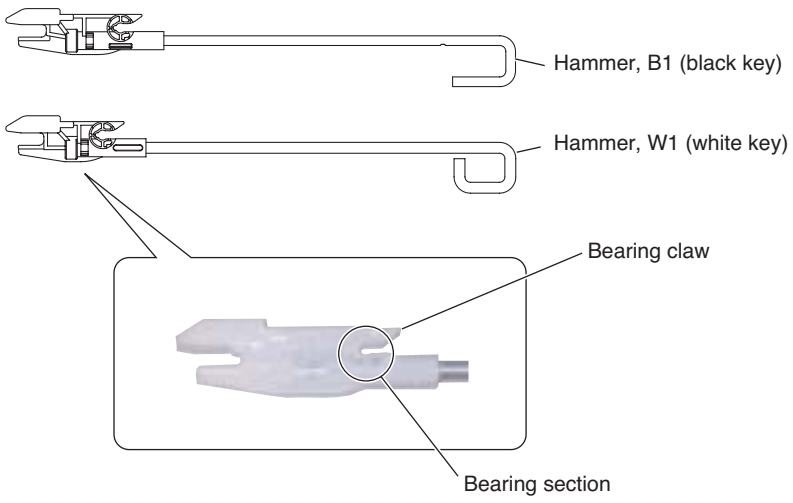

(Fig.17)

16. Assembling the Keyboard Assembly

16-1 Hammer (White Key), (Black Key)

After applying grease to the bearing section of the hammer, bring the hammer (white key)(black key) sideways from the rear, fit its bearing section to the hammer axis of the key frame and pull it forward until a click sound is heard. (Fig.18)

* *There are 8 hammer types differing in weight. Be sure to check the type of the hammer for correct installation. (Table 1)*

Part Name		Range for Applicable Tone Keys
White Key	Hammer, W1	A-1 - F1
	Hammer, W2	G1 - E3
	Hammer, W3	F3 - D5
	Hammer, W4	E5 - C7
Black Key	Hammer, B1	A#-1 - F#1
	Hammer, B2	G#1 - D#3
	Hammer, B3	F#3 - C#5
	Hammer, B4	D#5 - A#6

(Table 1)

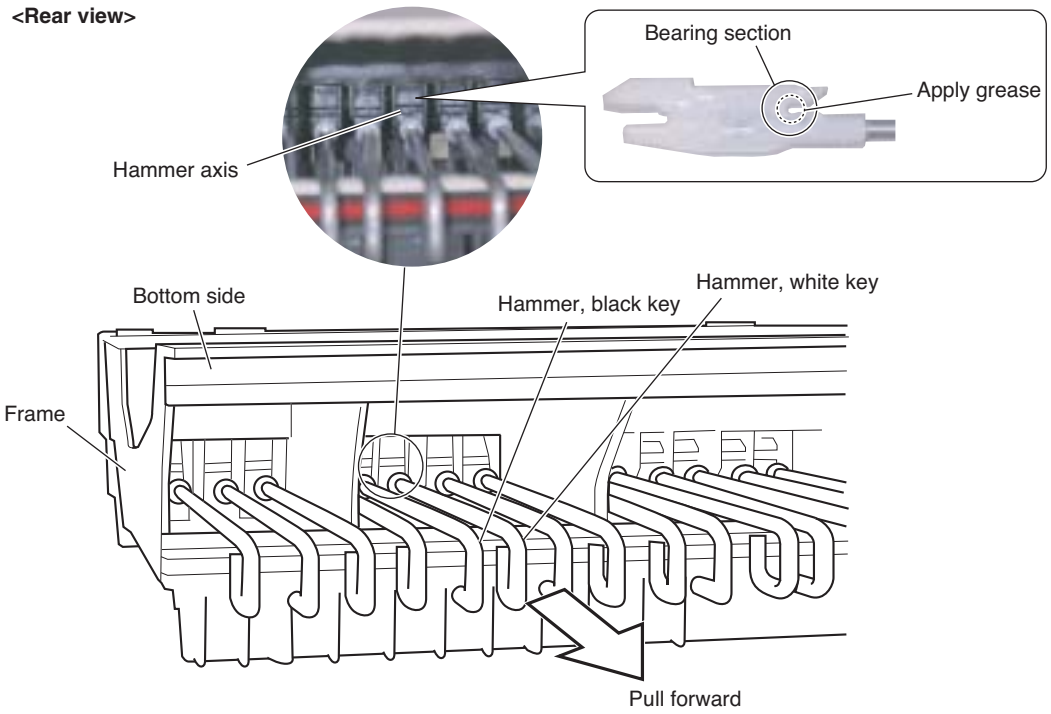

(Fig.18)

16-2 **GHL88L Circuit Board**

Tighten the six (6) screws marked [260A] to fix the GHL88L circuit boards. (Fig.13)

16-3 **GHL88M Circuit Board**

Connect the FFC cable to CN2 of the GHL88M circuit board, attach the filament tape. (Fig.15)

Pass the end of the cable into the through hole in the frame and pull it out from its outlet. (Fig.15)

Tighten the seven (7) screws marked [260B] to fix the GHL88M circuit board. (Fig.13))

16-4 **GHL88H Circuit Board**

Tighten the five (5) screws marked [260C] to fix the GHL88H circuit board. (Fig.13)

16-5 **Rubber Contact**

Note that the rubber contact has s specific installation direction. Be careful not to install it in the wrong direction.

* ***A triangle mark (Δ) on the rubber contact must face the front. (Fig.19)***

To prevent looseness of the rubber contact, fit it securely in place using a clip or similar object. (Fig.20)

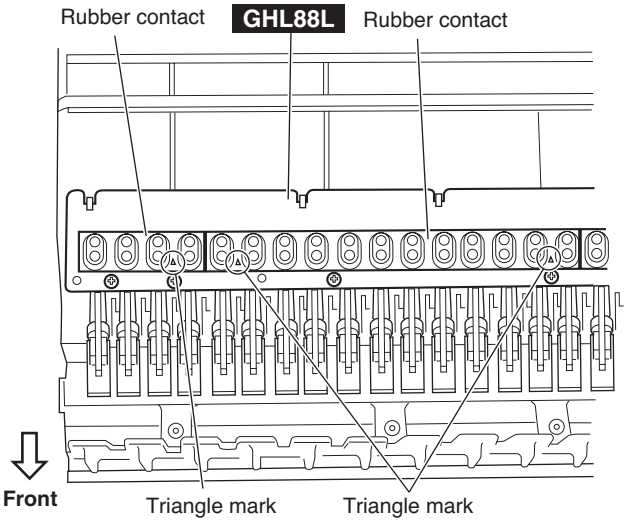

(Fig.19)

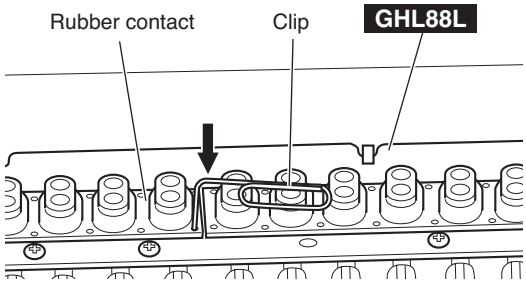

(Fig.20)

16-6 **Actuate Rubber**

After applying grease to top and bottom faces of the actuate rubber, fit it to the white key (black key). (Fig.21)

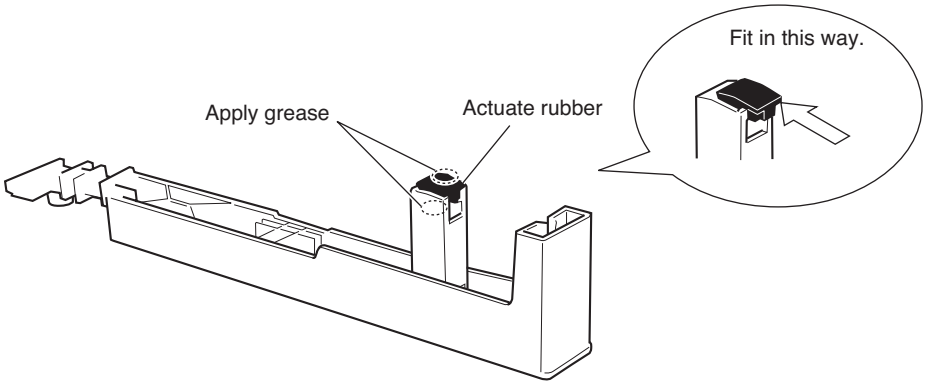

(Fig.21)

16-7 **White key assembly and black key assembly**
After applying grease to the key guide, install the white key assembly/black key assembly.
At this time, check to make sure that the key guide of the key frame and inside slit at the front of white key as well as the contact arm of the hammer and actuate rubber of the white key assembly/black key assembly are installed properly. (Fig.22)
Use the four (4) screws marked [270A] to fix 1 octave white key assembly/black key assembly. (Fig.10)

16-8 Use the two (2) screws marked [270B] to fix the A-1 to B-1 keys. (Fig.10)

16-9 Use a screw marked [270C] to fix the C7 key. (Fig.10)

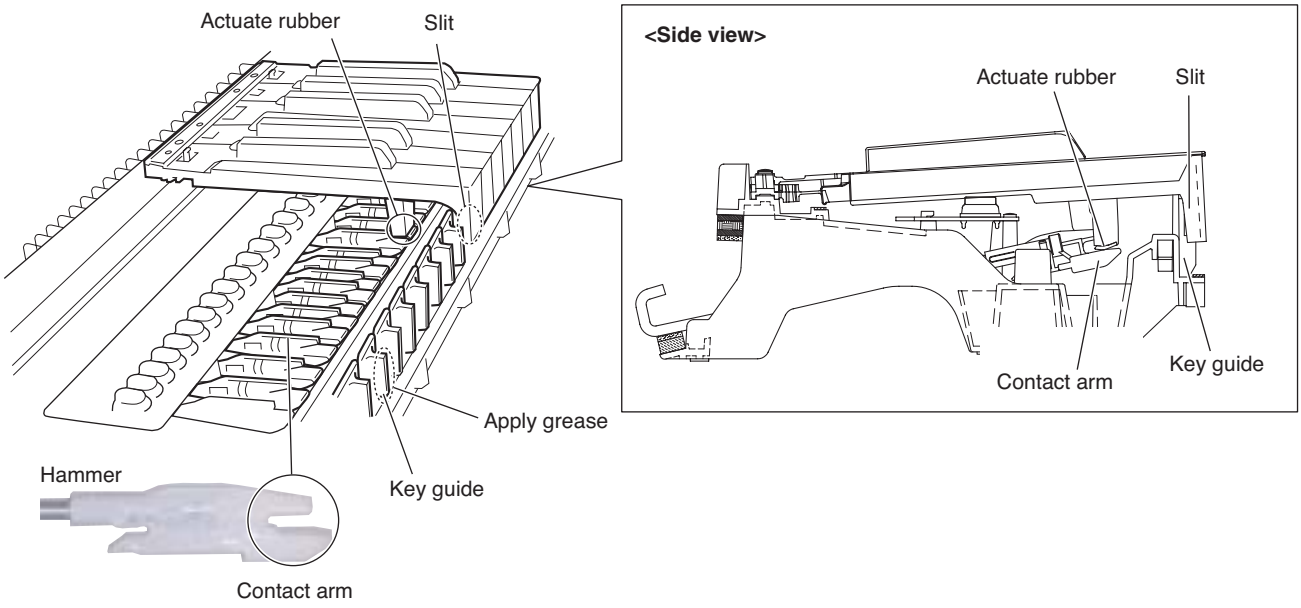

(Fig.22)

■ LSI PIN DESCRIPTION

YMW767-VTZ (X6055A00) CPU 20
S1D13700F01A100 (X5422A00) LCD CONTROLLER 21
PD789022GB-A15-8E (XZ560100) CPU 21
ISP1161A1BD (X5879A00) USB CONTROLLER 22
AK4385ET (X6040A00) DAC 22

● YMW767-VTZ (X6055A00) CPU

DM: IC101

Pin No.	NAME	I/O	FUNCTION	Pin No.	NAME	I/O	FUNCTION
1	VSS	-	VSS	65	VSS	-	VSS
2	TESTN	I	Input for TEST	66	IOVDD	-	IOVDD +3.3V
3	PLLBPN	I	PLL bypass select	67	LBN/LWRN/PF6	O	External memory lower-byte enable
4	PLLVDD	-	PLLVDD +2.5V	68	UBN/UWRN/PF7	O	External memory upper-byte enable
5	CIN	-	Capacitor terminal for PLL	69	RDN/PF4	O	External memory read enable
6	PLLVSS	-	PLLVSS	70	MD00	I/O	
7	TRSTN	I		71	MD08	I/O	
8	TMS	I		72	MD01	I/O	
9	TCK	I	JTAG input	73	MD09	I/O	External memory data bus
10	TDI	I		74	MD02	I/O	
11	TD0	O	JTAG output	75	MD10	I/O	
12	XI	I	Crystal oscillator	76	MD03	I/O	
13	XO	O	Crystal oscillator	77	VSS	-	VSS
14	VSS	-	VSS	78	MD11	I/O	
15	VDD	-	VDD +2.5V	79	MD04	I/O	
16	ICN	I	Hardware reset	80	MD12	I/O	
17	ECSN	I	CPU I/F chip select	81	MD05	I/O	
18	EWRN/PD5	I	CPU I/F write enable	82	MD13	I/O	External memory data bus
19	ERDN/PD4	I	CPU I/F read enable	83	MD06	I/O	
20	EA3/PD3	I		84	MD14	I/O	
21	EA2/PD2	I	CPU I/F address bus	85	MD07	I/O	
22	EA1/PD1	I		86	MD15	I/O	
23	EA0/PD0	I		87	WRN/PF5	O	External memory write enable
24	IOVDD	-	IOVDD +3.3V	88	VSS	-	VSS
25	ED0/PC0	I/O		89	VDD	-	VDD +2.5V
26	ED1/PC1	I/O		90	IOVDD	-	IOVDD +3.3V
27	ED2/PC2	I/O		91	MA17	O	
28	ED3/PC3	I/O		92	MA16	O	
29	ED4/PC4	I/O	CPU I/F data bus	93	MA15	O	
30	ED5/PC5	I/O		94	MA14	O	
31	ED6/PC6	I/O		95	MA13	O	
32	ED7/PC7	I/O		96	MA12	O	
33	VSS	-	VSS	97	MA11	O	External memory address bus
34	IRQ0N/PH0	I	Interrupt input	98	MA10	O	
35	TxD0	O	Serial output	99	MA09	O	
36	RxD0	I	serial input	100	MA08	O	
37	TxD1/PG2	O	Serial output	101	MA07	O	
38	RxD1/PH1	I	serial input	102	MA06	O	
39	SCLK1/PH2	I	External synchronization clock	103	MA05	O	
40	SD0	O	Serial output	104	VSS	-	VSS
41	SDI/PH3	I	serial input	105	MA04	O	
42	BCLK	O	Bit clock output	106	MA03	O	External memory address bus
43	WCLK/SY0	O	Word clock output	107	MA02	O	
44	SYSCLK/PG3	O	Clock output	108	MA01	O	
45	VSS	-	VSS	109	CS0N/PG0	O	External memory chip select
46	VDD	-	VDD +2.5V	110	MA18	O	
47	IOVDD	-	IOVDD +3.3V	111	MA19	O	
48	PA0	I/O		112	MA21/PF1	O	External memory address bus
49	PA1	I/O		113	MA22/PF2	O	
50	PA2	I/O		114	MA20	O	
51	PA3	I/O	I/O port	115	MA23/PF3	O	External memory address bus
52	PA4	I/O		116	CS1N/PG1	O	External memory chip select
53	PA5	I/O		117	MA00/PF0	O	
54	PA6	I/O		118	VSS	-	VSS
55	PA7	I/O		119	VDD	-	VDD +2.5V
56	VSS	-	VSS	120	IOVDD	-	IOVDD +3.3V
57	PB0	I/O		121	CS2N/PE0	O	
58	PB1	I/O		122	CS3N/PE1	O	
59	PB2	I/O		123	CS4N/CASN/PE2	O	
60	PB3	I/O	I/O port	124	CS5N/PE3	O	External memory chip select
61	PB4	I/O		125	CS50RDN/PE4	O	
62	PB5	I/O		126	CS51WRN/PE5	O	
63	PB6	I/O		127	CS52WRN/PE6	O	
64	PB7/SYI	I/O		128	CS53WRN/RASN/PE7	O	

● S1D13700F01A100 (X5422A00) LCD CONTROLLER

DM:IC201

PIN NO.	NAME	I/O	FUNCTION	PIN NO.	NAME	I/O	FUNCTION
1	VSS		Ground	33	VSS		Ground
2	AB12	I	Address bus	34	XCD1	O	Drain output
3	AB11	I		35	XCG1	I	Gate input
4	AB10	I		36	RESET#	I	Reset
5	AB9	I		37	SCANEN	I	Test mode set up input
6	AB8	I		38	TESTEN	I	
7	HIOVDD		Power supply	39	CLKI	I	Externally sourced system clock
8	AB7	I	Address bus	40	COREVDD		Power supply
9	AB6	I		41	RD#	I	Read strobe
10	AB5	I		42	WR#	I	Write strobe
11	AB4	I		43	CS#	I	Chip select
12	COREVDD		Power supply	44	DB7	I/O	Data bus
13	AB3	I	Address bus	45	DB6	I/O	
14	AB2	I		46	DB5	I/O	
15	AB1	I		47	DB4	I/O	
16	AB0	I		48	HIOVDD		Power supply
17	VSS		Ground	49	DB3	I/O	Data bus
18	FPDAT3	O	Data bus	50	DB2	I/O	
19	FPDAT2	O		51	DB1	I/O	
20	FPDAT1	O		52	DB0	I/O	
21	FPDAT0	O		53	VSS		Ground
22	NIOVDD		Power supply	54	WAIT#	O	Wait output
23	FPSHIFT	O	Shift clock	55	HIOVDD		Power supply
24	XECL	O	X driver enable chain clock	56	CNF0	I	Input pin for S1D 13700 setting
25	COREVDD		Power supply	57	CNF1	I	
26	FPLINE	O	Latch pulse	58	CNF2	I	
27	MOD	O	Frame signal	59	CNF3	I	
28	VSS		Ground	60	CNF4	I	
29	YSCL	O	Scan shift clock	61	AS#	I	Address strobe
30	FPFRAME	O	Scan start pulse	62	AB15	I	Address bus
31	YDIS	O	LCD power-down output	63	AB14	I	
32	NIOVDD		Power supply	64	AB13	I	

● PD789022GB-A15-8E (XZ560100) CPU

DM:IC701

PIN NO.	NAME	I/O	FUNCTION	PIN NO.	NAME	I/O	FUNCTION
1	P12	I/O	Port 1	23	P32/INTP2/CPT2	I/O	Port 3/External interrupt input/Capture edge input
2	P11	I/O		24	P31/INTP1	I/O	Port 3/External interrupt input
3	P10	I/O		25	P30/INTP0	I/O	
4	P47/KR7	I/O	Port 4/Key return signal detection input	26	P22/RXD/SI0	I/O	Port 2/Asynchronous serial interface serial data input/Serial interface serial data input
5	P46/KR6	I/O		27	P21/TXD/SO0	I/O	Port 2/Asynchronous serial interface serial data output/Serial interface serial data output
6	P45/KR5	I/O		28	P20/ASCK/SCK0	I/O	Port 2/Asynchronous serial interface serial clock input/Serial interface serial clock
7	P44/KR4	I/O		29	P07	I/O	Port 0
8	P43/KR3	I/O		30	P06	I/O	
9	P42/KR2	I/O		31	P05	I/O	
10	P41/KR1	I/O		32	P04	I/O	
11	P40/KR0	I/O		33	P03	I/O	
12	NC			34	P02	I/O	
13	IC		Internally connected (N.C.)	35	P01	I/O	
14	X2		Clock	36	P00	I/O	
15	X1	I		37	NC		
16	VSS0		Ground	38	VDD1		Power supply
17	VDD0		Power supply	39	VSS1		Ground
18	/RESET	I	System reset	40	P17	I/O	Port 1
19	P53	I/O	Port 5	41	P16	I/O	
20	P52	I/O		42	P15	I/O	
21	P51/TO2	I/O	Port 5/16-bit timer output	43	P14	I/O	
22	P50/TI0/TO0	I/O	Port 5/External count clock input to 8-bit timer/8-bit timer output	44	P13	I/O	

● **ISP1161A1BD** (X5879A00) **USB CONTROLLER**

DM: IC301

PIN NO.	NAME	I/O	FUNCTION	PIN NO.	NAME	I/O	FUNCTION
1	DGND	-	Digital ground	33	NDP_SEL	I	Indicates to the HC
2	D2	I/O	DATA bus	34	EOT	I	EOT input
3	D3	I/O		35	DGND	-	Digital ground
4	D4	I/O		36	D_SUSPEND	O	DC 'suspend' state output
5	D5	I/O		37	D_WAKEUP	I	DC wake-up input
6	D6	I/O		38	/GL	O	GoodLink LED output
7	D7	I/O		39	D_VBUS	I	DC USB input
8	DGND	-	Digital ground	40	H_WAKEUP	I	HC wake-up input
9	D8	I/O	DATA bus	41	CLKOUT	O	Programmable clock out
10	D9	I/O		42	H_SUSPEND	O	HC 'suspend' output
11	D10	I/O		43	XTAL1	I	Crystal input
12	D11	I/O		44	XTAL2	I	Crystal output
13	D12	I/O		45	DGND	-	Digital ground
14	D13	I/O		46	/H_PSW1	O	Power switching control
15	DGND	-	Digital ground	47	/H_PSW2	O	Power switching control
16	D14	I/O	DATA bus	48	D_DM	AI/O	USB D- data line for DC
17	D15	I/O		49	D_DP	AI/O	USB D+ data line for DC
18	DGND	-	Digital ground	50	H_DM1	AI/O	USB D- data line for HC
19	Vhold1	-	Voltage holding pin	51	H_DP1	AI/O	USB D+ data line for HC
20	NC	-	No connection	52	H_DM2	AI/O	USB D- data line for HC
21	/CS	I	Chip select	53	H_DP2	AI/O	USB D+ data line for HC
22	/RD	I	Read strobe	54	/H_OC1	I	Overcurrent sensing input
23	/WR	I	Write strobe	55	/H_OC2	I	Overcurrent sensing input
24	Vhold2	-	Voltage holding pin	56	Vcc	-	Power supply(3.3V)
25	DREQ1	O	HC DMA request	57	AGND	-	Analog ground
26	DREQ2	O	DC DMA request	58	Vreg	-	3.3V regulator output
27	/DACK1	I	HC DMA acknowledge	59	A0	I	Address bus
28	/DACk2	I	DC DMA acknowledge	60	A1	I	Address bus
29	INT1	O	HC interrupt output	61	NC	-	No connection
30	INT2	O	DC interrupt output	62	DGND	-	Digital ground
31	TEST	O	test output	63	D0	I/O	DATA bus
32	/RESET	I	Reset input	64	D1	I/O	

● **AK4385ET** (X6040A00) **DAC** (Digital to Analog Converter)

DM:IC401

PIN NO.	NAME	I/O	FUNCTION	PIN NO.	NAME	I/O	FUNCTION
1	MCLK	I	Master Clock	9	AOUTR-	O	Rch Analog out(-)
2	BICK	I	Audio Serial Data Clock	10	AOUTR+	O	Rch Analog out(+)
3	SDTI	I	Audio Serial Date Input	11	AOUTL-	O	Lch Analog out(-)
4	LRCK	I	L/R Clock	12	AOUTL+	O	Lch Analog out(+)
5	PDN	I	Power Down mode	13	Vss	-	Ground
6	CSN	I	Chip Select	14	VDD	-	Power Supply
7	CCLK	I	Control Data Input	15	DZFR	O	Rch Data Zero Input Detect
8	CDTI	I	Control Data Input	16	DZFL	O	Lch Data Zero Input Detect

■ IC BLOCK DIAGRAM

● **SN74LV32APWR** (X5647A00)
Quad 2 Input OR
DM:IC805

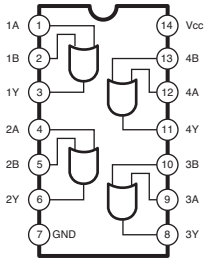

● **SN74AHCT1G08DCKR** (X0158A00)
● **74V1T08CTR** (X7542A00)
Single 2-Input Positive-AND Gate
DM: IC103,104

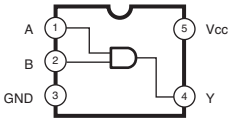

FUNCTION TABLE

INPUTS		OUTPUT
A	B	Y
H	H	H
L	X	L
X	L	L

● **NJM4580E(TE2)** (X2331A00)
Dual Operational Amplifier
DM: IC402

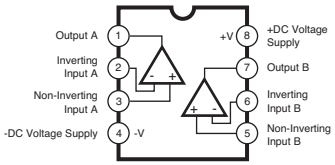

● **MC34063EBD-TR** (X7371A00)
DC-DC Converter
DM:IC202

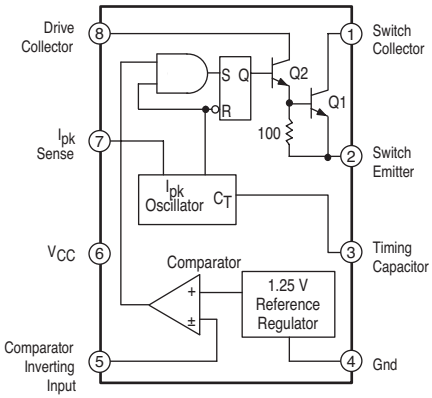

● **ADC84S021** (X6905A00)
A/D Converter
DM: IC501

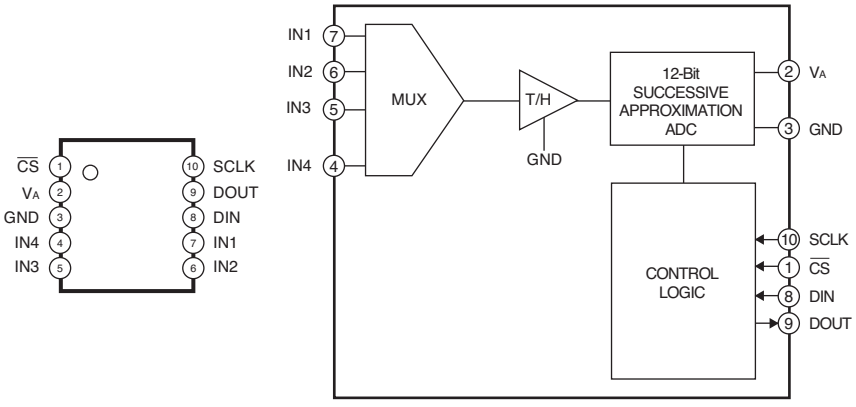

● **R5520H001A** (X7414A00)
USB High Side Switch
DM: IC302

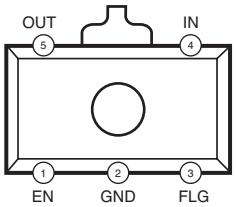

Pin No.	Pin Name	Function
1	EN	Enableb (Input)
2	GND	Ground
3	FLG	Fault Flag (Open-drain Output)
4	IN	Power Supply Input
5	OUT	Switch Output (Switch of the high side switch)

● **LA4625** (XY209A00)
Power Amplifier
AM: IC201

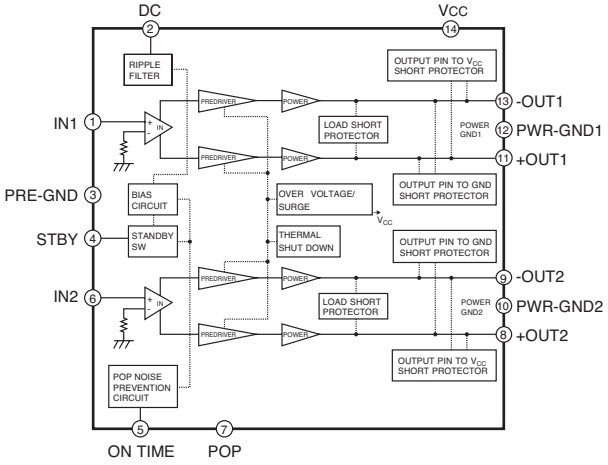

■ CIRCUIT BOARDS

CONTENTS

AM Circuit Board (X7135B0) 26
DJACK Circuit Board (X7135B0) 26
DM Circuit Board (X7136C0) 25
ENC Circuit Board (X7135B0) 29
GHL88H Circuit Board (X6246D0) 32
GHL88L Circuit Board (X6244D0) 30
GHL88M Circuit Board (X6245G0) 31
MKO Circuit Board (X7135B0) 29
MVR Circuit Board (X7135B0) 29
PB Circuit Board (X7135B0) 29
PNL Circuit Board (X7137B0) 27
PNR Circuit Board (X7137B0) 28
PSW Circuit Board (X7135B0) 29
TW Circuit Board (X7135B0) 29

Note: See parts list for details of circuit board component parts.

• DM Circuit Board

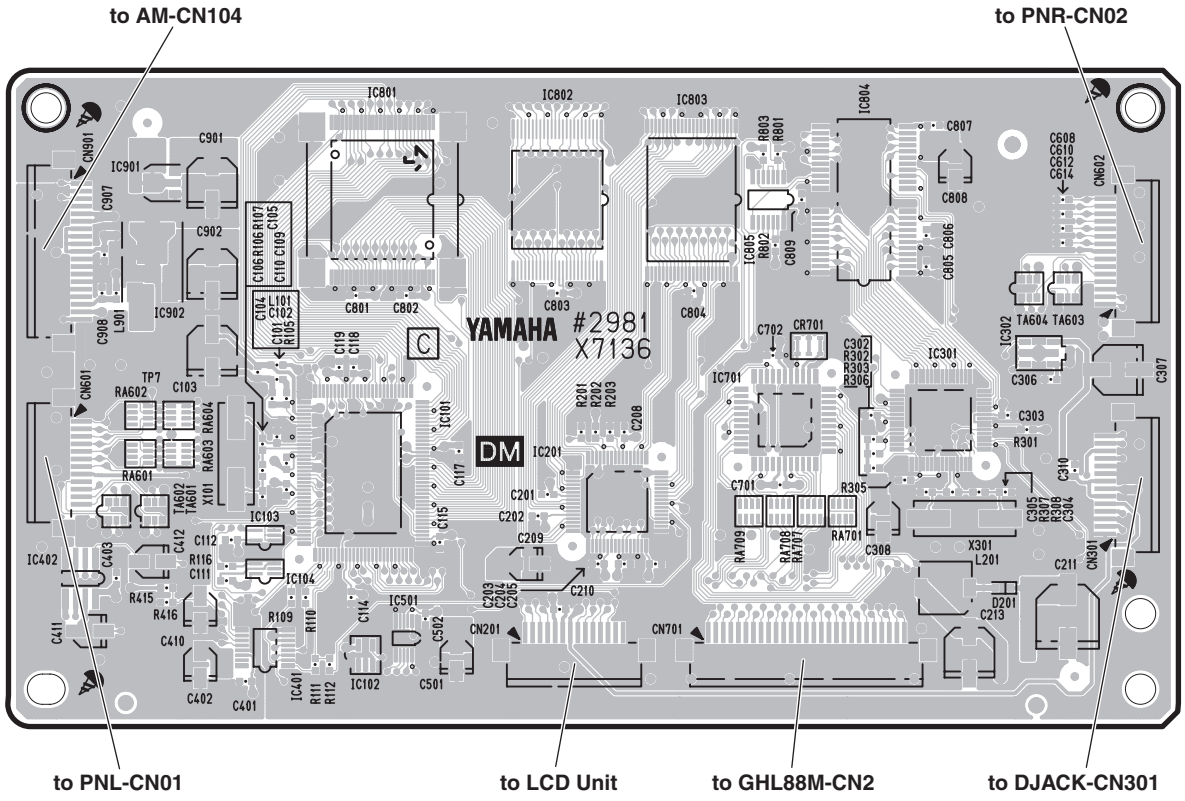

Component Side

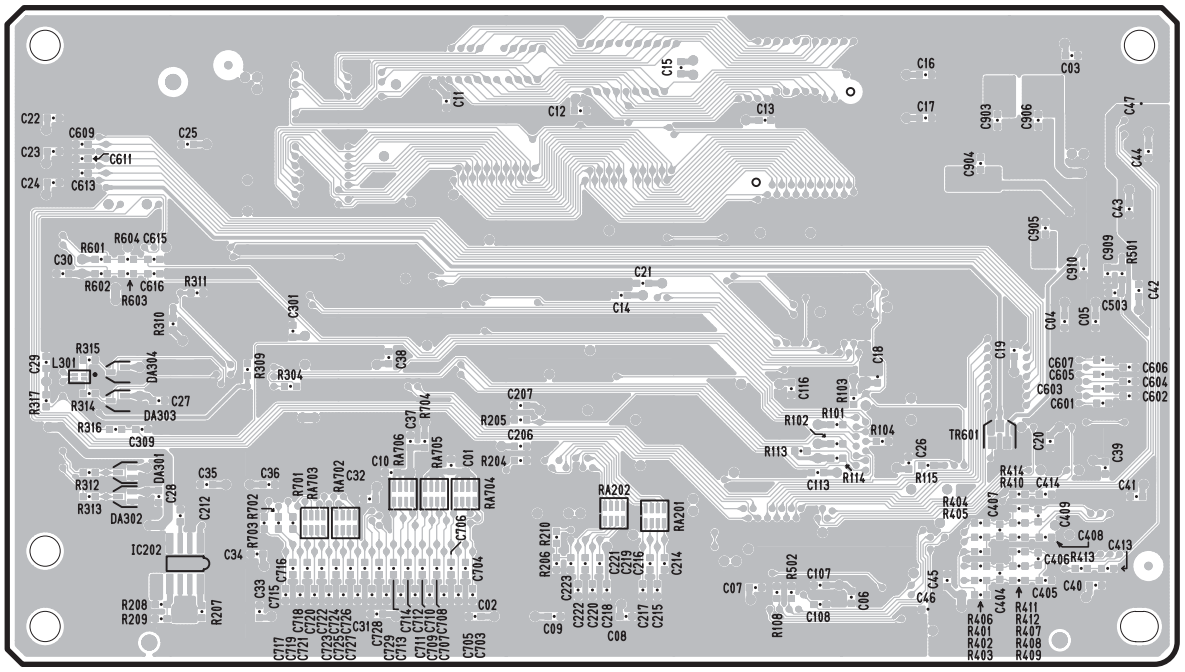

Pattern Side

2NA-WG25920 1

Note: See parts list for details of circuit board component parts.

• AM Circuit Board

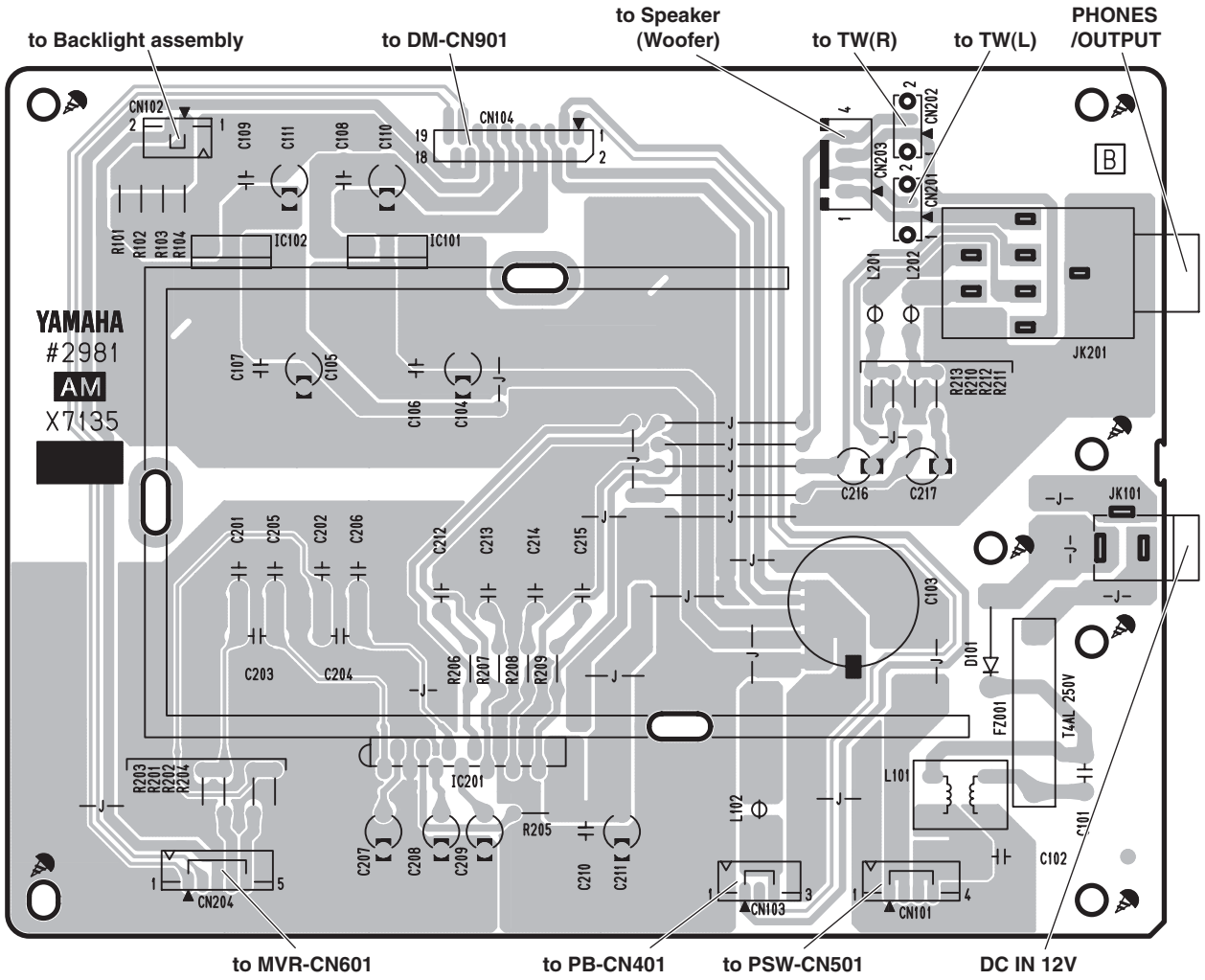

Component Side

A nonwoven fabric does not overflow from the end of a jack.

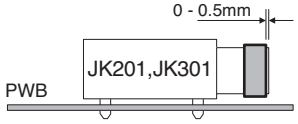

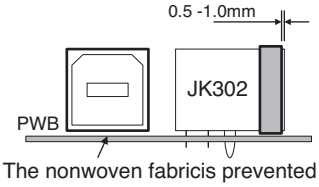

The nonwoven fabricis prevented from overlapping on the PWB side.

To pile it up in the upper side, it is pasted.

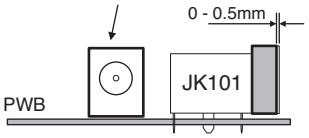

• DJACK Circuit Board

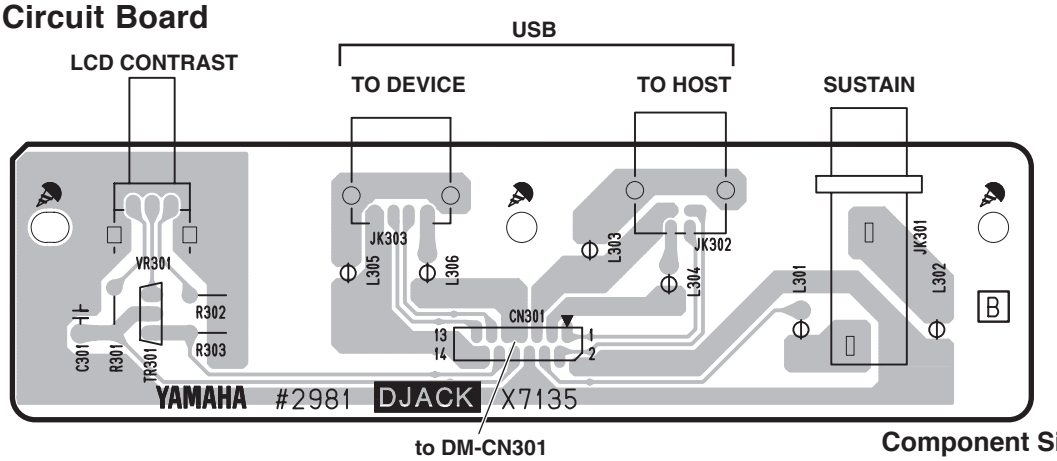

Component Side

AM : 2NA-WG25900
DJACK : 2NA-WG25900

Note: See parts list for details of circuit board component parts.

• PNL Circuit Board

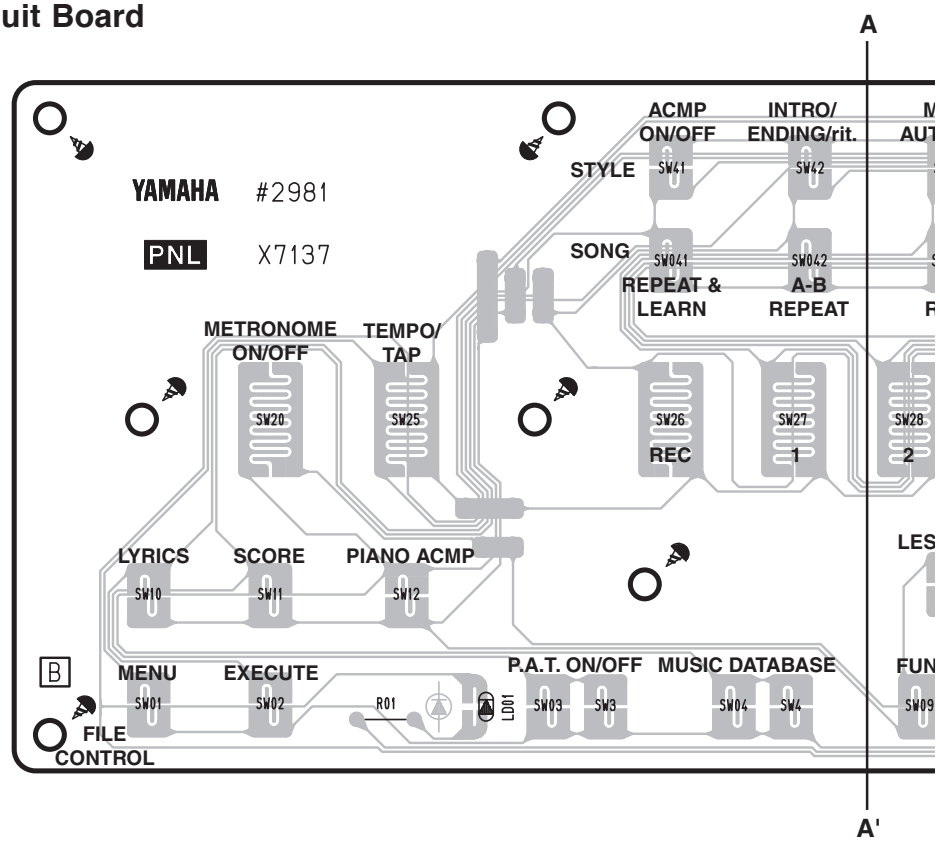

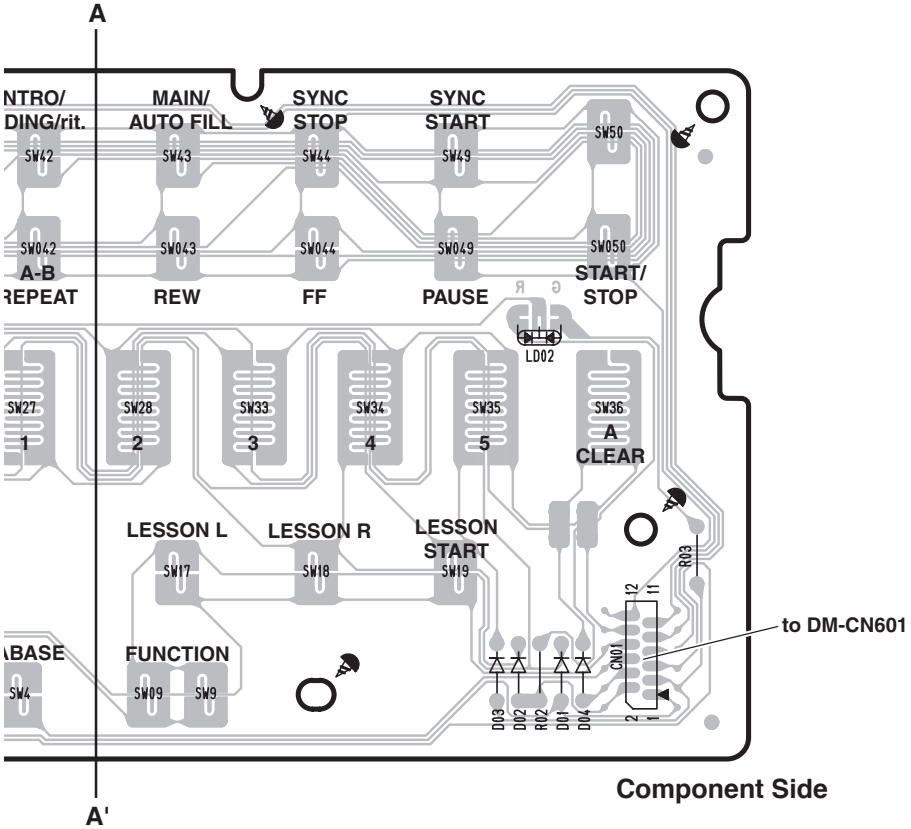

Component Side

2NA-WG25520

Note: See parts list for details of circuit board component parts.

• PNR Circuit Board

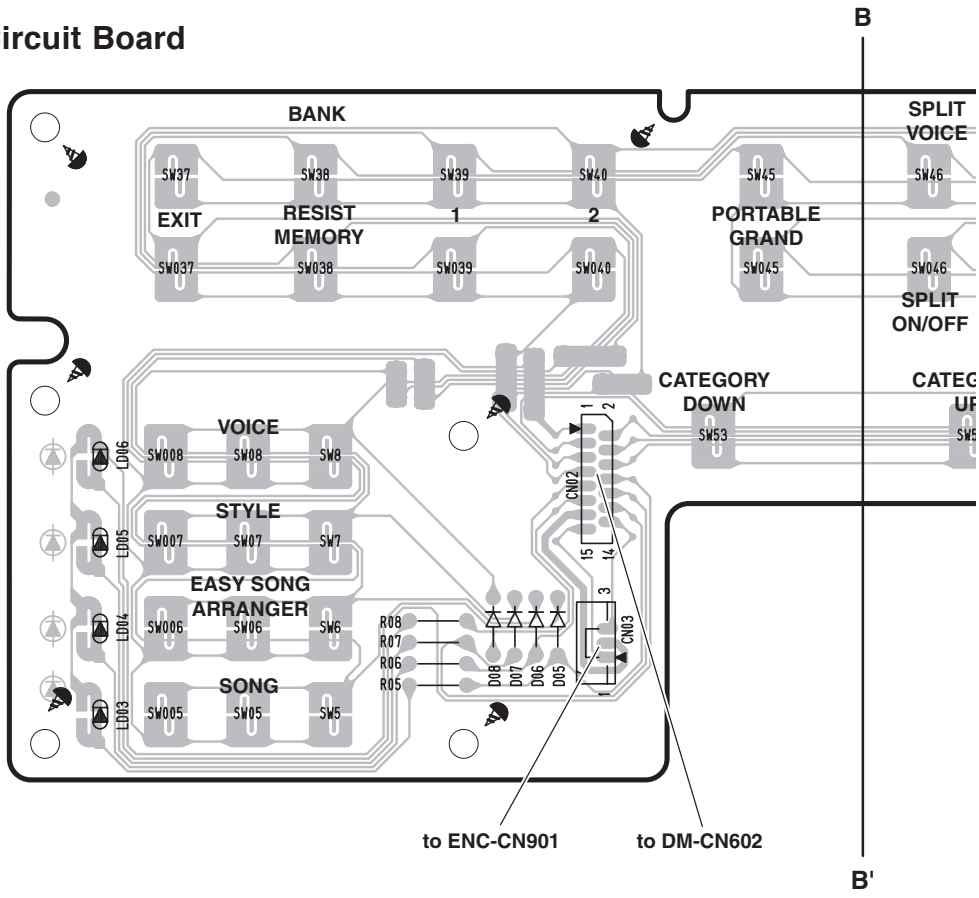

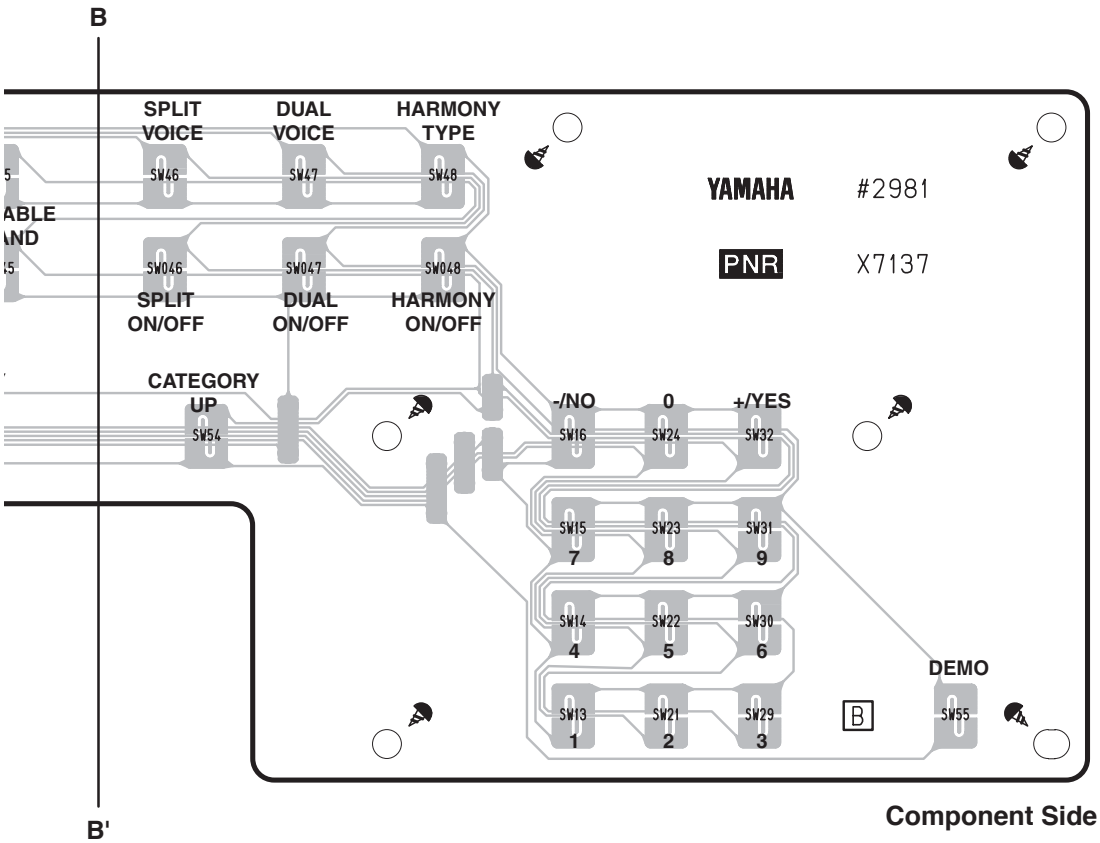

Component Side

Note: See parts list for details of circuit board component parts.

2NA-WG25520

• ENC Circuit Board

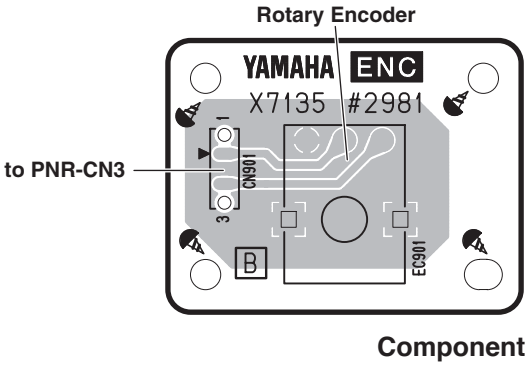

• MVR Circuit Board

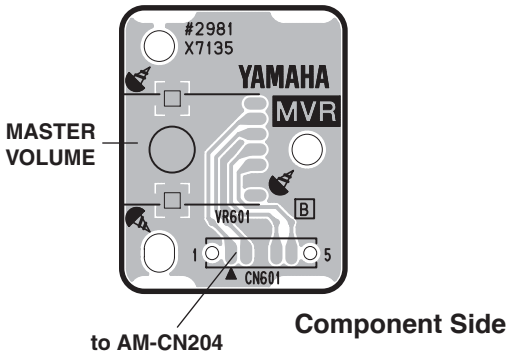

• PSW Circuit Board

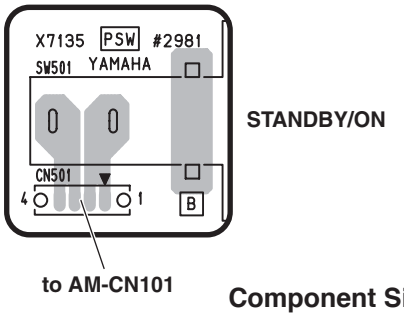

• PB Circuit Board

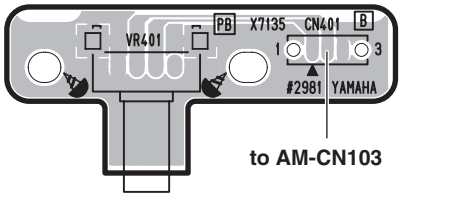

• TW (L) Circuit Board

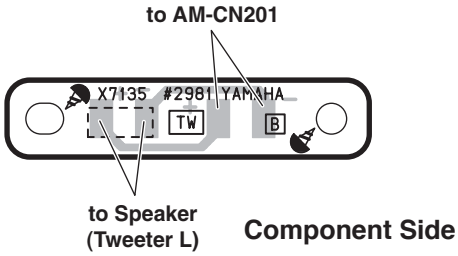

• TW (R) Circuit Board

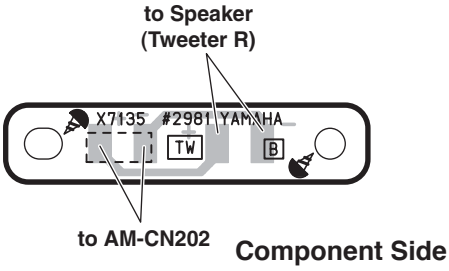

• MKO Circuit Board



NOTE: MKO circuit board is used as a connector assembly holder.

Component Side

ENC :2NA-WG25900
PSW :2NA-WG25900
TW :2NA-WG25900
MVR :2NA-WG25900
PB :2NA-WG25900
MKO :2NA-WG25900

Note: See parts list for details of circuit board component parts.

• GHL88L Circuit Board

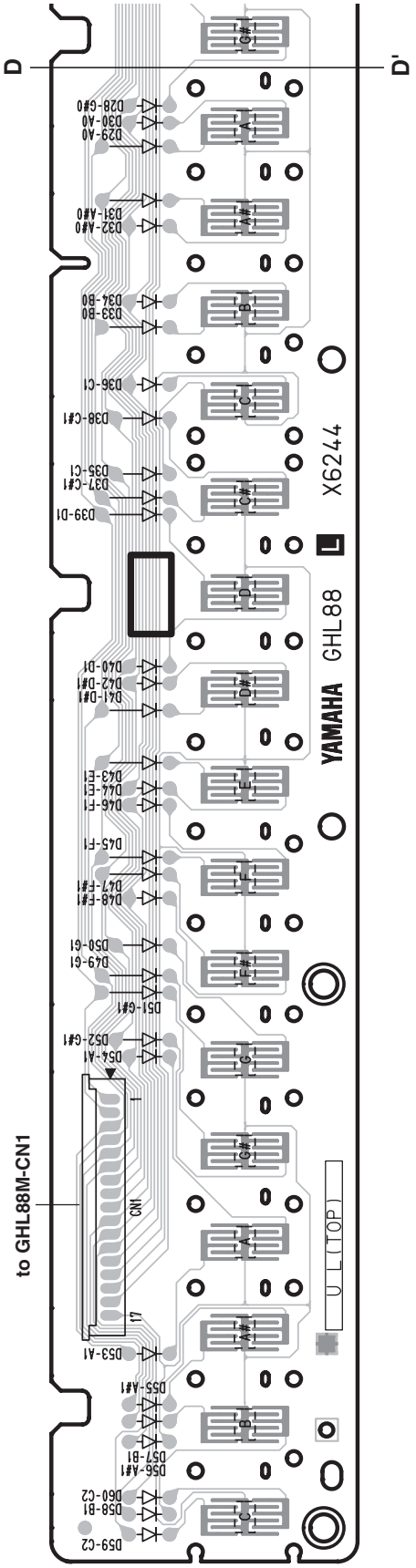

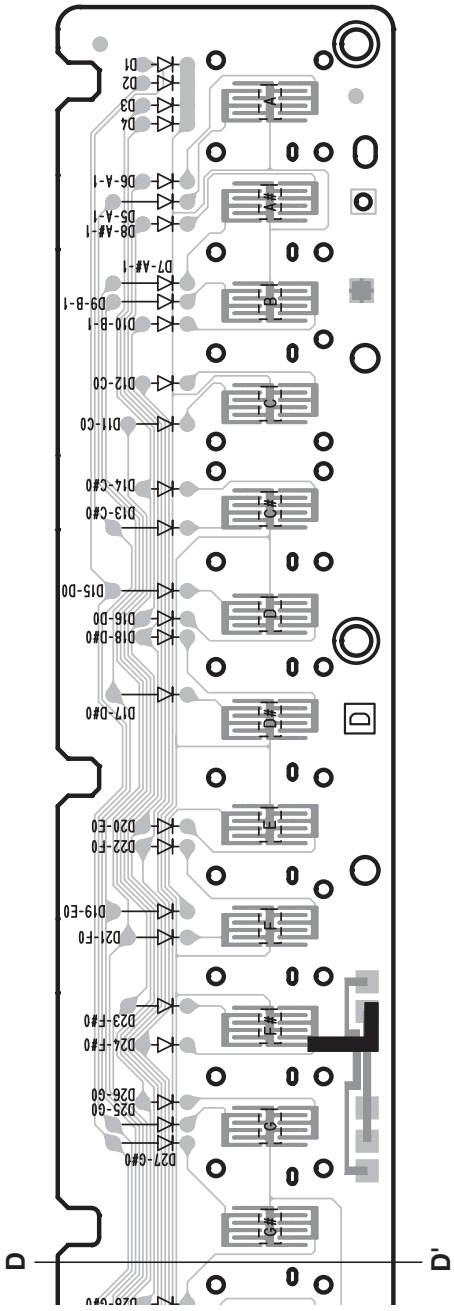

Component Side

Note: See parts list for details of circuit board component parts.

2NAK8-WF46230

• GHL88M Circuit Board

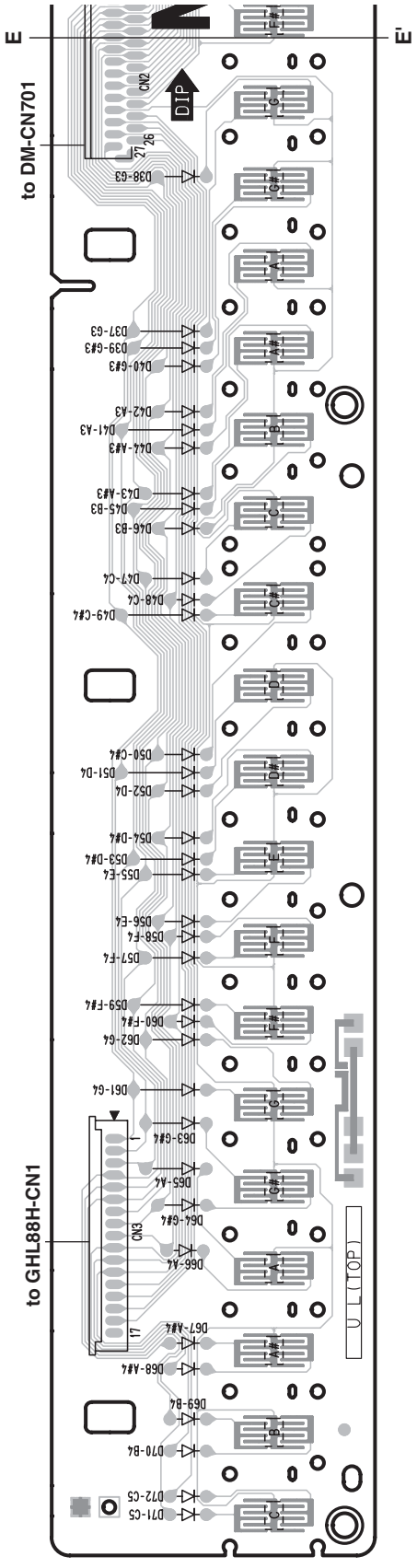

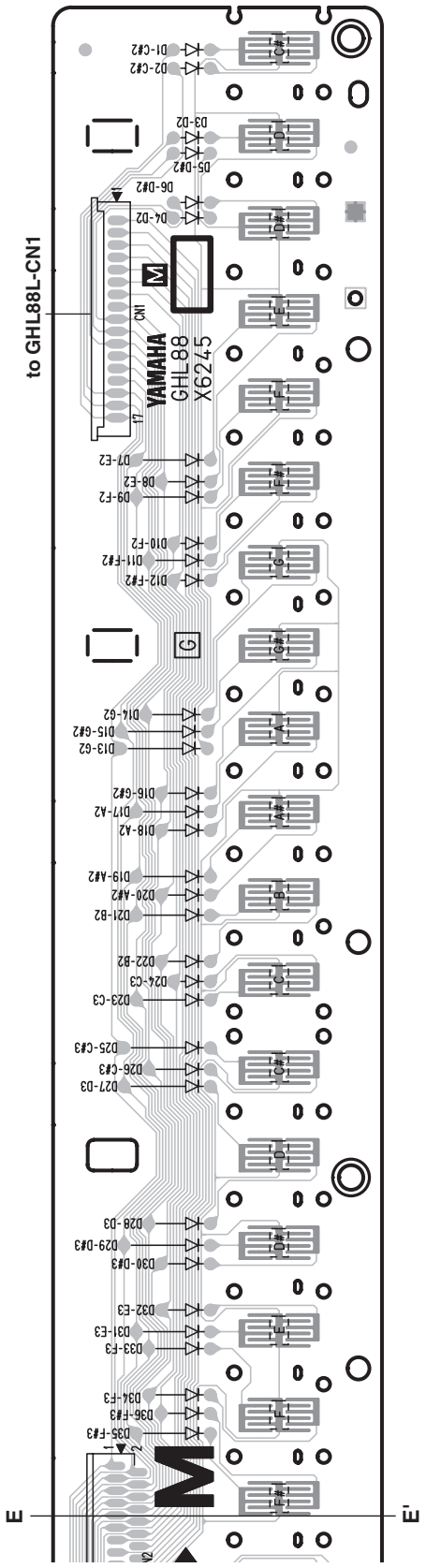

Component Side

2NAK8-WF46240 2

Note: See parts list for details of circuit board component parts.

• GHL88H Circuit Board

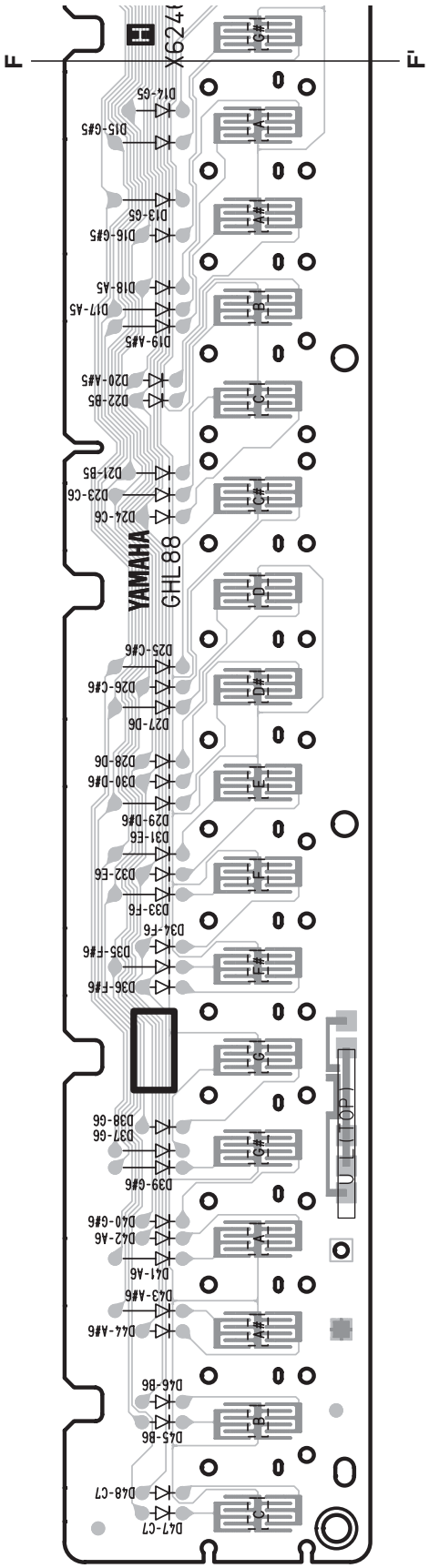

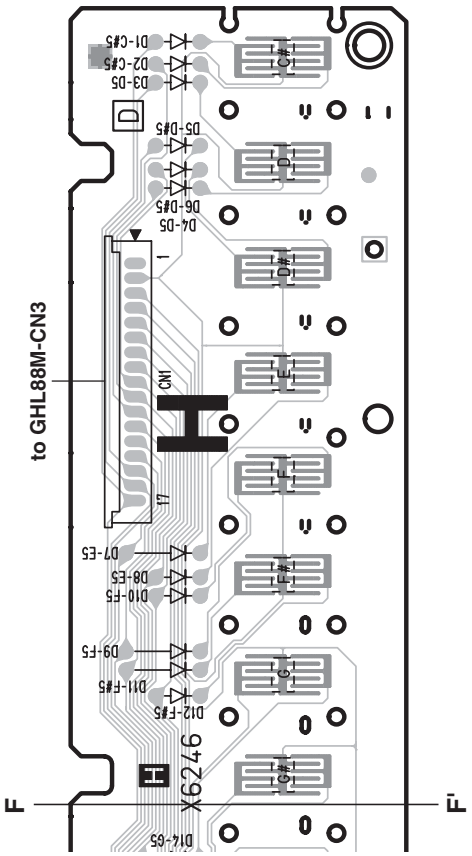

Component Side

Note: See parts list for details of circuit board component parts.

2NAK8-WF46250

■ TEST PROGRAM

*** If you execute the test No.47 (Factory Set), then the user's preset data may be lost. Therefore, back up the user's data in advance.**

A. PREPARATION

1) PA-5D or PA-51 (AC adaptor) is used.
2) Measuring instruments: frequency counter, level meter (with JIS-C filter)
   Note: Connect a stereo plug to the [PHONES/OUTPUT] jack at 33 ohms.
3) Jigs: Foot switch (FC-4 or FC-5), USB cable, USB memory, USB-MIDI driver (*1)
   PC (Install a USB-MIDI driver (*1) in PC and finish the THROUGH setup.)

   *1 Obtain the USB-MIDI driver from CD-ROM (X7225A00) for DGX-620/YPG-625 or Yamaha official website. (URL>>http://www.yamahapkclub.com)

B. HOW TO ENTER THE TEST PROGRAM

While pressing the C2#, F2 and G2# keys, turn the [STANDBY/ON] switch on.

DGX-620/YPG-625

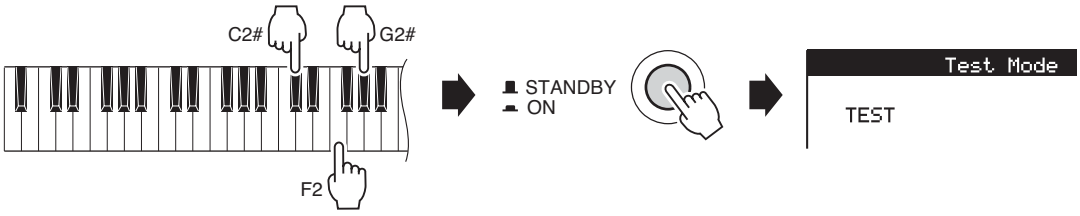

C. TEST PROCEDURE

1) When the test program is started, "TEST" will be displayed on the LCD.
2) Press the [-] or [+] button of the number buttons to select a test program item.
3) Press the [START/STOP] button to execute the test.

   * If the test result is OK, or the test item is completed, press the [START/STOP] button again to return to the test item selection display.

   * Press the [-] or [+] button of the number buttons to select the next test program item.

   * When the test result is OK, an asterisk (*) is added in front of its item name on display.
   If the test result is NG, press the [DEMO] button or the lowest (leftmost) white key to return the item selection display.

D. TEST PROGRAM LIST

(dBu=dBm)

TEST No.	LCD Display	Test Descriptions, Judgment Criteria
--	--	Contrast Check Set the contrast knob to the legible position of LCD. When the contrast knob is turned clockwise (or counterclockwise), the LCD becomes blue (or white).
1	001 Version	Displays ROM (Program) version. (In case of OK:"XXX" Prog, NG:"Err" Prog)

TEST No.	LCD Display	Test Descriptions, Judgment Criteria
2	002 Rom Chk1	Checks the ROM that is connected to the CPU. (OK:“Rom OK”, NG:“Rom NG”) The test results appear on the LCD. Check that the LCD displays “Rom OK”.
3	003 Ram Chk1	Checks the RAM that is connected to the CPU. (OK:“Ram OK”, NG:“Ram NG”) The test results appear on the LCD. Check that the LCD displays “Ram OK”.
6	006 Flash Rom Chk1	Checks the flash ROM that is connected to CPU bus. The check result appears on the LCD. Check that the LCD displays “Flash Rom OK”. (OK:“Flash Rom OK”, NG:“Flash Rom NG”)
7	007 USB Storage Chk	Checks USB. (OK:“USB Storage OK”, NG:“USB Storage NG”) Connect a USB memory to the [USB TO DEVICE] jack with a USB cable, and execute the test. The test results appear on the LCD. Check that the LCD displays “USB Storage OK”.
11	011 TG1 Chk	Outputs the sine wave by changing the channels in sequence from C2 to G4. [32 notes] Check the sound by hearing that there is no noise or abnormal sound. After auto-scaling is finished, individual keys can be played. (If playing two or more keys simultaneously, the first pressed key has priority to make a sound.)
13	013 Pit Chk	Connect the frequency counter to the [PHONES/OUTPUT] jack. (L or R) Sets PAN to Center and produces a signal at 440.14 Hz +/-0.22 Hz. Check that the correct signal is produced.
--	--	Volume Decrescence Check Connect the level meter (with a JIS-C filter) to the [PHONES/OUTPUT] jack. (33 ohm load) Set the [MASTER VOLUME] at minimum and check the output level. PHONES L : less than -70.0 dBu PHONES R : -70.0 dBu (dBu=dBm)
14	014 Output R	Connect the level meter (with a JIS-C filter) to the [PHONES/OUTPUT] jack. (33 ohm load) Set the [MASTER VOLUME] at maximum and check the output level (1 kHz sine wave, PAN=R). PHONES L : less than -45.0 dBu PHONES R : -1.0 dBu +/-2 dB
15	015 Output L	Connect the level meter (with a JIS-C filter) to the [PHONES/OUTPUT] jack. (33 ohm load) Set the [MASTER VOLUME] at maximum and check the output level (1 kHz sine wave, PAN=L). PHONES L : -1.0 dBu +/- 2 dB PHONES R : less than -45.0 dBu
20	020 SW Chk	Checks the switches on the panel. Press the switches on the LCD as instructed. A pre-assigned note is output when the switch is pressed. A rotary encoder is clockwise set up to UP and is counterclockwise set to DOWN. (See P.36 “Table 1”.) The check result appears on the LCD when all the switches are pressed as instructed. Check that “SW OK” is displayed. Also, check that no key stick is existed. (OK:“SW OK”, NG:“SW NG”, When multiple switchs are pressed at the same time:“Over Two”)
21	021 All LED Chk	Check that all the LEDs on the panel are on.
22	022 Red LED Chk	Check that all the red LEDs on the panel are on.
23	023 Green LED Chk	Check that all the green LEDs on the panel are on.
28	028 LCD On	Check that all LCD dots are on. (The whole screen becomes white.)
29	029 LCD Off	Check that all LCD dots are off. (The whole screen becomes blue.)

TEST No.	LCD Display	Test Descriptions, Judgment Criteria
31	031 Pedal1 Chk	Connect the foot switch (FC-4 or FC-5) to the [SUSTAIN] jack. Check that the C3 note is output when the [START/STOP] button is pressed while stepping the pedal and the C4 note is output when releasing the pedal. The sound stops when stepping the pedal again. Check that the LCD displays “Pedal1 OK”. (OK:“Pedal1 OK”, NG:“Pedal1 NG”)
33	033 Pitch Bend Chk	Checks the pitch bend wheel. (First, it checks if the center position of the wheel is correct or not.) Check that the C3 note is output when rotating the [PITCH BEND] wheel to minimum and the C4 note is output when rotating it to maximum. (OK:“Pitch Bend OK”, NG:“Pitch Bend NG”, If the center position of the wheel is not correct:“Pitch Bend C NG”)
37	037 MIDI Chk	Checks MIDI and USB. Connect the PC with a USB-MIDI driver installed and the [USB TO HOST] terminal using a USB cable, and execute the test. (As for the PC, install a USB-MIDI driver in the PC and finish the THROUGH setup, in advance.) Check that the C4 note is output and the LCD displays “MIDI OK”. (OK:“MIDI OK”, NG:“MIDI NG”)
41	041 Rom Chk2	Checks the ROM that is connected to the CPU. The test result appears on the LCD. Check that the LCD displays “Rom OK”. It takes about 20 seconds. (OK:“Rom OK”, NG:“Rom NG”)
42	042 Ram Chk2	Check the RAM that is connected to the CPU. The test results appear on the LCD. Check that the LCD displays “Ram OK”. It takes about 5 seconds. (OK:“Ram OK”, NG:“Ram NG”)
45	045 Flash Rom Chk2	Checks the flash ROM that is connected to CPU bus. The check result appears on the LCD. Check that the LCD displays “Flash Ram OK”. It takes about 60 seconds. (OK:“Flash Rom OK”, NG:“Flash Rom NG”)
47	047 Factory set	All backup domains are initialized and it changes into a factory-shipments state when executing this test.
48	048 Test Exit	Exit from the test program after executing this test.
--	--	Noise Check (in the normal mode) Connect the level meter (with a JIS-C filter) to the [PHONES/OUTPUT] jack. (33 ohm load) Set the [MASTER VOLUME] at maximum and check that the noise level is within the range below. PHONES L/R : less than -74.0 dBu

* Note: As for the test no.41 - 45, it takes time. If you want to skip them, press the [+/YES] button several times to go to the test no.47 (Factory Set).

Table 1

No.	SW Name	Display	Note No.
1	DIAL UP	Dial Up	C2
2	DIAL DOWN	Dial Down	C#2
3	FILE MENU	File Menu	D2
4	FILE EXCUTE	File Excute	D#2
5	P.A.T.	P. A.T.	E2
6	Music Data Base	MusicDataBase	F2
7	FUNCTION	Function	F#2
8	LYRICS	Lyrics	G2
9	SCORE	Score	G#2
10	Chord Finger	Chord Finger	A2
11	LESSON L	Lesson L	A#2
12	LESSON R	Lesson R	B2
13	LESSON START	Lesson Start	C3
14	METRONOME	Metronome	C#3
15	TEMPO/TAP	Tempo/TAP	D3
16	SONG REC	SONG REC	D#3
17	SONG 1	SONG 1	E3
18	SONG 2	SONG 2	F3
19	SONG 3	SONG 3	F#3
20	SONG 4	SONG 4	G3
21	SONG 5	SONG 5	G#3
22	SONG A	SONG A	A3
23	ACMP	ACMP	A#3
24	INTRO/ENDING	Intro/Ending	B3
25	MAIN/AUTO FILL	Main/Fill	C4
26	SYNC STOP	Sync Stop	C#4
27	SYNC START	Sync Start	D4
28	START/STOP	Start/Stop	D#4
29	SONG	SONG	E4
30	EASY SONG ARRANGER	EasySongArrange	F4
31	STYLE	Style	F#4
32	VOICE	Voice	G4
33	CATEGORY –	Category –	G#4
34	CATEGORY +	Category +	A4
35	TENKEY 1	Tenkey 1	A#4
36	TENKEY 2	Tenkey 2	B4
37	TENKEY 3	Tenkey 3	C5
38	TENKEY 4	Tenkey 4	C#5
39	TENKEY 5	Tenkey 5	D5
40	TENKEY 6	Tenkey 6	D#5
41	TENKEY 7	Tenkey 7	E5
42	TENKEY 8	Tenkey 8	F5
43	TENKEY 9	Tenkey 9	F#5
44	TENKEY –	Tenkey –	G5
45	TENKEY 0	Tenkey 0	G#5
46	TENKEY +	Tenkey +	A5
47	EXIT	Exit	A#5
48	BANK/MEMORY	Memory	B5
49	REGIST 1	Regist 1	C6
50	REGIST 2	Regist 2	C#6
51	PORTABLE GRAND	Portable Grand	D6
52	SPLIT	Split	D#6
53	DUAL	Dual	E6
54	HARMONY	Harmony	F6
55	DEMO	Demo	F#6

■ INITIALIZATION

This function erases all backup data in the instrument's flash memory and restores the initial default settings. The following initialization procedures are provided.

Backup Clear

To clear data backed up to the internal flash memory-panel user setting, registration memory, user songs, style file-turn the power on by pressing the [STANDBY/ON] switch while holding the highest white key on the keyboard.
The backed up data will be erased and the default values restored.

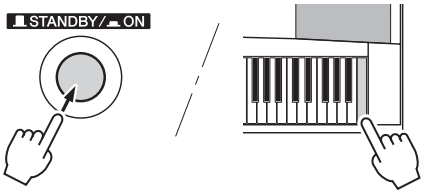

Flash Clear

To clear song data and style files that have been transferred to the internal flash memory from a computer, turn the power on by pressing the [STANDBY/ON] switch while simultaneously holding the highest white key on the keyboard and the three highest black keys.

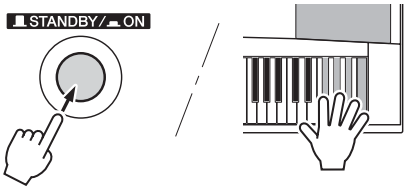

When you execute the Flash Clear operation, song data you have purchased will also be cleared. Be sure to save data you want to keep to a computer.

■ USER DATA BACKUP

To backup user data to an external device, use a USB flash memory.
Refer to the following for the data you can backup using it.

* User Songs
* Style Files
* Registration Memory Data

Connecting a USB Flash Memory

1 Connect a USB flash memory to the USB TO DEVICE terminal, being careful to insert it with the proper orientation.

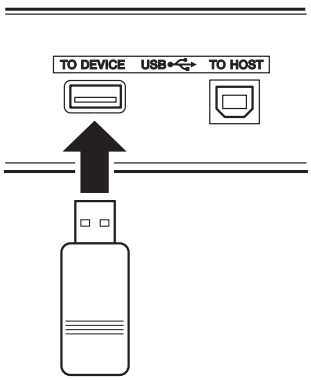

IMPORTANT

**** In order to play songs copied to a USB flash memory from a computer or other device, the songs must be stored either in the USB flash memory's root directory or a first-level/second-level folder in the root directory. Songs stored in these location can be selected and played as song numbers 036 - 535.***
Songs stored in third-level-folders created inside a second-level folder cannot be selected and played by this instrument.

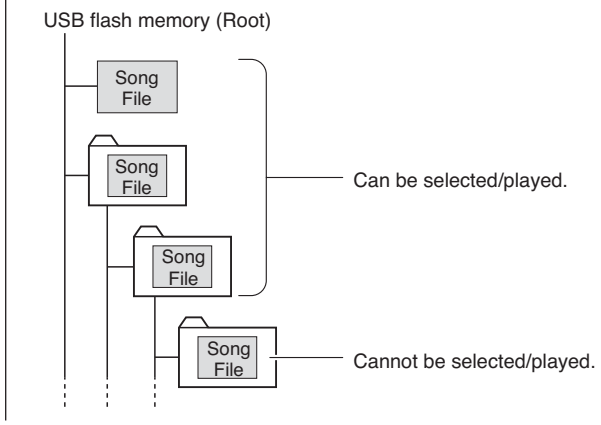

2 Check that the file control icon is shown in the MAIN display.

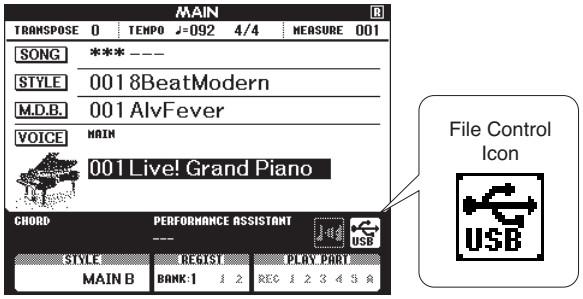

You can go to the FILE CONTROL display from which you can access USB flash memory operations by pressing the [MENU] button from this display.

NOTE

** No sound will be produced if you play the keyboard while the FILE CONTROL display is showing. Also, in this state only buttons related to file functions will be active.*

NOTE

** The FILE CONTROL display will not appear in any of the following cases:*

** During style or song playback.*
** During a lesson.*
** While data is being loaded from a USB flash memory.*

Formatting USB Flash Memory

New USB flash memory must be formatted before they can be used by this instrument.

⚠ CAUTION

**** If you format a USB flash memory that already contains data, all of the data will be erased. Be careful not to erase important data when using the format function.***

1 After connecting the USB flash memory to be formatted to the instrument's USB TO DEVICE terminal, check that the icon is showing in the MAIN display.

2 Press the FILE CONTROL [MENU] button.

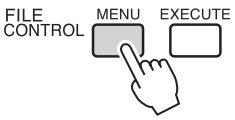

3 Use the CATEGORY [▲▲] and [▼▼] buttons to select the Format item.

The display prompts you for confirmation.

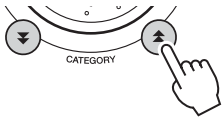



4 Press the [EXECUTE] button and the display prompts you for confirmation.

You can press the [-] button at this point to cancel the operation.

5 Press the [EXECUTE] button again, or the [+] button, and the format operation will begin.

⚠ CAUTION

**** Once the format-in-progress message appears on the display the format operation cannot be canceled. Never turn off the power or remove the USB flash memory during this operation.***

6 A message will appear on the display to inform you that the operation has finished.

Press the [EXIT] button to return to the MAIN display.

NOTE

** If the USB flash memory has been write-protected, an appropriate message will appear on the display and you will not be able to execute the operation.*

Saving Data

Three types of data are saved to one 'User File' by this operation: user song, style file, and registration memory data. When you save a user song the style file and registration memory are also saved automatically.

1 Make sure that a properly formatted USB flash memory has been properly connected to the instrument's USB TO DEVICE terminal, and that the icon is showing in the MAIN display.

2 Press the FILE CONTROL [MENU] button.

3 Use the CATEGORY [▲▲] and [▼▼] buttons to locate the User File Save item.

A default file name will automatically be created.

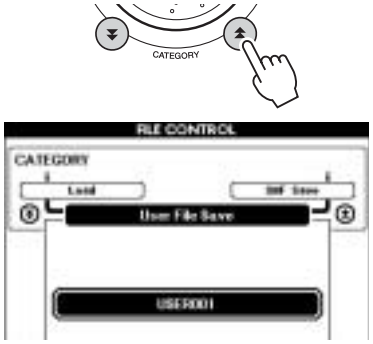

● To Overwrite an Existing File

If you want to overwrite a file that already exists on the USB flash memory, use the dial or the [+] and [-] buttons to select the file, then skip ahead to step 6.

NOTE

** Up to 100 user files can be saved to a single USB flash memory.*

** If the USB flash memory has been write-protected, an appropriate message will appear on the display and you will not be able to execute the operation.*

** If there is not enough capacity left on the USB flash memory to save the data an appropriate message will appear on the display and you will not be able to save the data. Erase unwanted files from the USB flash memory to make more memory available, or use a different USB flash memory.*

4 Press the [EXECUTE] button. A cursor will appear below the first character in the file name.

5 Change the file name as necessary.

* The [-] button moves the cursor to the left, and the [0] button moves it to the right.
* Use the dial to select a character for the current cursor location.
* The [+] button deletes the character at the cursor location.

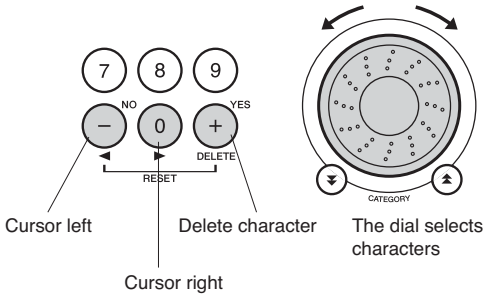

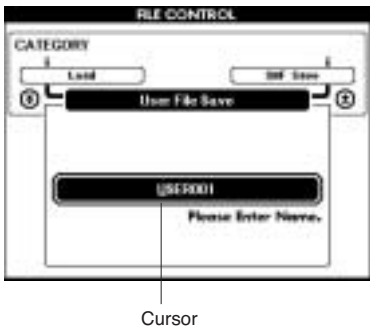

6 Press the [EXECUTE] button. The display prompts you for confirmation.

You can cancel the save operation at this point by pressing the [-] button.

7 Press the [EXECUTE] button again, or the [+] button, and the save operation will begin.

The user song will be stored to the USER FILE folder in the USB flash memory.

⚠ CAUTION

**** Once the save-in-progress message appears on the display the operation cannot be canceled. Never turn off the power or remove the USB flash memory during this operation.***

8 A message will appear on the display to inform you that the operation has finished.

Press the [EXIT] button to return to the MAIN display.

NOTE

** If an existing filename is specified the display prompts you for confirmation. Press [EXECUTE] or [+] if it is OK to overwrite the file, or [-] to cancel.*

** The amount of time it will take to perform the save operation will depend on the condition of the USB flash memory.*

Loading User Files and Style Files

User files, style files, and styles residing on a USB flash memory can be loaded into the instrument. If the required style file has already been transferred to the instrument from a computer using the Musicsoft Downloader application, start from step 2, below.

⚠ CAUTION

**** If you load a User File user song (031-035), style file, and registration memory data will be overwritten by the newly loaded data. If you only load a style file, only the style file will be overwritten. Save important data to a USB flash memory before loading data that will overwrite it.***

1 With the USB flash memory containing the file you want to load connected to the USB TO DEVICE connector, check that the File Control icon is shown in the MAIN display.

2 Press the FILE CONTROL [MENU] button.

3 Use the CATEGORY [▲▲] and [▼▼] buttons to locate the Load item.

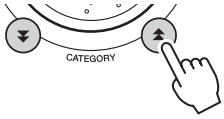



4 Use the dial to select the user file or style file you want to load.

All user files in the USB flash memory will be displayed first, followed by the style files.

NOTE

** Style files must be located in the root directory. Style files located within folders will not be recognized.*

5 Press the [EXECUTE] button. The display prompts you for confirmation.

You can cancel the load operation at this point by pressing the [-] button.

6 Press the [EXECUTE] button again, or the [+] button, and the load operation will begin.

⚠ CAUTION

**** Once the load-in-progress message appears on the display the operation cannot be canceled. Never turn off the power or remove the USB flash memory during this operation.***

7 A message will appear on the display to inform you that the operation has finished.

Press the [EXIT] button to return to the MAIN display.

■ MIDI IMPLEMENTATION CHART

YAMAHA [Portable Grand] Date:17-NOV-2005
Model DGX-620 / YPG-625 MIDI Implementation Chart Version:1.0

Function...		Transmitted		Recognized	Remarks
Basic	Default	1 - 16		1 - 16	
Channel	Changed	x		x	
	Default	3		3	
Mode	Messages	x		x	
	Altered	**********		x	
Note		0 - 127		0 - 127	
Number :	True voice	**********		0 - 127	
Velocity	Note ON	o 9nH,v=1-127		o 9nH,v=1-127	
	Note OFF	x 9nH,v=0		x	
After	Key's	x		x	
Touch	Ch's	x		x	
Pitch Bend		o 0-24 semi		o 0-24 semi	
	0,32	o		o	Bank Select
	1,11,84	x	*1	o	
	6,38	o		o	Data Entry
	7,10	o		o	
Control	64	o		o	Sustain
	71	x	*1	o	Harmonic Content
Change	72	o		o	Release Time
	73	x	*1	o	Attack Time
	74	x	*1	o	Brightness
	91,93	o		o	Effect Depth
	96-97	x	*1	o	RPN Inc,Dec
	100-101	o		o	RPN LSB,MSB
Prog		o 0 - 127		o 0 - 127	
Change :	True #	**********			
System Exclusive		o		o	
:	Song Pos.	x		x	
Common :	Song Sel.	x		x	
:	Tune	x		x	
System :	Clock	o		o	
Real Time:	Commands	o		o	
Aux :All Sound OFF		x		o(120,126,127)	
:Reset All Cntrls		x		o(121)	
:Local ON/OFF		x		o(122)	
:All Notes OFF		x		o(123-125)	
Mes- :Active Sense		o		o	
sages:Reset		x		x	

*1 Refer to MIDI DATA FORMAT.

Mode 1 : OMNI ON , POLY Mode 2 : OMNI ON ,MONO o : Yes
Mode 3 : OMNI OFF, POLY Mode 4 : OMNI OFF,MONO x : No

■ MIDI DATA FORMAT

NOTE:

1 By default (factory settings) the instrument ordinarily functions as a 16-channel multi-timbral tone generator, and incoming data does not affect the panel voices or panel settings. However, the MIDI messages listed below do affect the panel voices, auto accompaniment, and songs.
- *MIDI Master Tuning*
- *System exclusive messages for changing the Reverb Type and Chorus Type.*

2 Messages for these control change numbers cannot be transmitted from the instrument itself. However, they may be transmitted when playing the accompaniment, song or using the Harmony effect.

3 Exclusive

<GM System ON> F0H, 7EH, 7FH, 09H, 01H, F7H
- *This message automatically restores all default settings for the instrument, with the exception of MIDI Master Tuning.*

<MIDI Master Volume> F0H, 7FH, 7FH, 04H, 01H, ll, mm, F7H
- *This message allows the volume of all channels to be changed simultaneously (Universal System Exclusive).*
- *The values of "mm" is used for MIDI Master Volume. (Values for "ll" are ignored.)*

<MIDI Master Tuning> F0H, 43H, 1nH, 27H, 30H, 00H, 00H, mm, ll, cc, F7H
- *This message simultaneously changes the tuning value of all channels.*
- *The values of "mm" and "ll" are used for MIDI Master Tuning.*
- *The default value of "mm" and "ll" are 08H and 00H, respectively. Any values can be used for "n" and "cc".*

<Reverb Type> F0H, 43H, 1nH, 4CH, 02H, 01H, 00H, mmH, llH, F7H
- *mm : Reverb Type MSB*
- *ll : Reverb Type LSB*

Refer to the Effect Map for details.

<Chorus Type> F0H, 43H, 1nH, 4CH, 02H, 01H, 20H, mmH, llH, F7H
- *mm : Chorus Type MSB*
- *ll : Chorus Type LSB*

Refer to the Effect Map for details.

4 When the accompaniment is started, an FAH message is transmitted. When accompaniment is stopped, an FCH message is transmitted. When the clock is set to External, both FAH (accompaniment start) and FCH (accompaniment stop) are recognized.

5 Local ON/OFF

<Local ON> Bn, 7A, 7F
<Local OFF> Bn, 7A, 00
Value for "n" is ignored.

■ Effect map

*When a Type LSB value is received that corresponds to no effect type, a value corresponding to the effect type (coming the closest to the specified value) is automatically set.

*The numbers in parentheses in front of the Effect Type names correspond to the number indicated in the display.

● REVERB

TYPE MSB	TYPE LSB								
	00	01	02	08	16	17	18	19	20
000	No Effect								
001	(01)Hall1				(02)Hall2	(03)Hall3			
002	Room					(04)Room1		(05)Room2	
003	Stage				(06)Stage1	(07)Stage2			
004	Plate				(08)Plate1	(09)Plate2			
005...127	No Effect								

● CHORUS

TYPE MSB	TYPE LSB								
	00	01	02	08	16	17	18	19	20
000...063	No Effect								
064	Thru								
065	Chorus		(02)Chorus2						
066	Celeste					(01)Chorus1			
067	Flanger			(03)Flanger1		(04)Flanger2			
068...127	No Effect								

Portable Grand

DGX-620/YPG-625

PARTS LIST

■ **CONTENTS**

OVERALL ASSEMBLY 2
STAND ASSEMBLY 5
LOWER CASE ASSEMBLY 6
KEYBOARD ASSEMBLY 8
FOOT PEDAL 10
ELECTRICAL PARTS 11

Note) DESTINATION ABBREVIATIONS

A:	Australian model	M:	South African model
B:	British model	O:	Chinese model
C:	Canadian model	Q:	South-east Asia model
D:	German model	T:	Taiwan model
E:	European model	U:	U.S.A. model
F:	French model	V:	General export model (110V)
H:	North European model	W:	General export model (220V)
I:	Indonesian model	N,X:	General export model
J:	Japanese model	Y:	Export model
K:	Korean model		

■ WARNING

Components having special characteristics are marked ⚠ and must be replaced with parts having specifications equal to those originally installed.

- ■ The numbers in “QTY” shows quantities for each unit.
- ■ The parts with “--” in “Part No.” are not available as spare parts.
- ■ The mark “}” in the REMARKS column means these parts are interchangeable.
- ■ The second letter of the shaded ( ) part number is O, not zero.
- ■ The second letter of the shaded ( ) part number is I, not one.

■ OVERALL ASSEMBLY

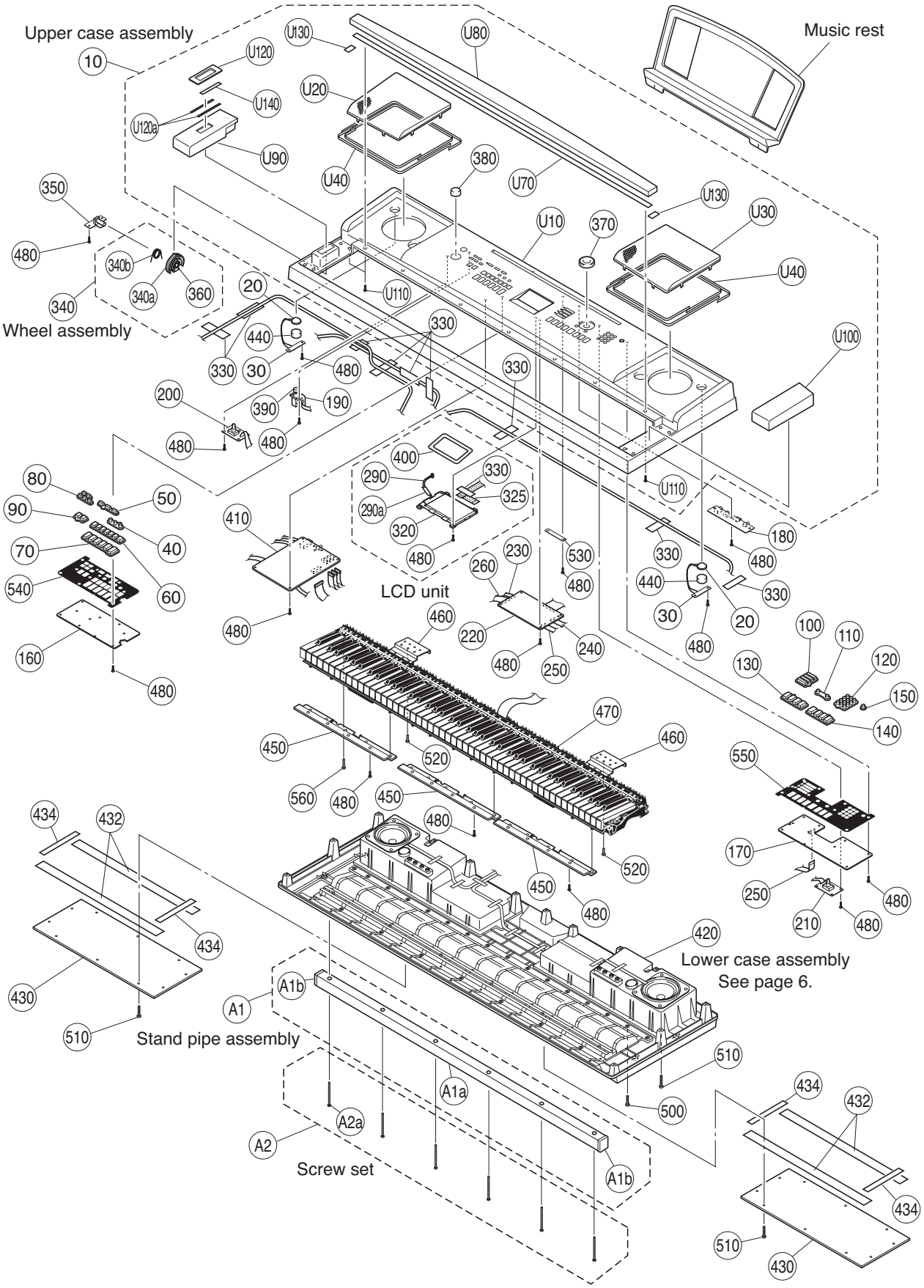

	REF NO.	PART NO.	DESCRIPTION		部品名	REMARKS	QTY	RANK
			OVERALL ASSEMBLY		総組立	DGX-620/YPG-625		
		--	Overall Assembly		総組立	DGX-620 (WF83800)		
		--	Overall Assembly		総組立	YPG-625 (WG39450)		
*	10	**WF839200**	Upper Case Assembly		上ケースAss'y	DGX-620		
*	10	**WG394400**	Upper Case Assembly		上ケースAss'y	YPG-625		
	20	**X0159A00**	Speaker	3.0cm	スピーカ	TWEETER	2	01
*	30	**WG258900**	Circuit Board	TW	TWシート	(WG25900)(X7135B0)	2	
*	40	**WF834800**	PN Switch	x3	PNスイッチ	LESSON L,R,START		
*	50	**WF834900**	PN Switch	x3	PNスイッチ	P.A.T.ON/OFF,FUNCTION MUSIC DATABASE		
*	60	**WG287600**	PN Switch	x7	PNスイッチ 印刷品	SONG MEMORY		
*	70	**WF835100**	PN Switch	x6	PNスイッチ	STYLE,SONG(REPEAT&LEARN		
*	80	**WF835200**	PN Switch	x5	PNスイッチ	...,START/STOP) MENU,EXECUTE,LYRICS		
*	90	**WF835300**	PN Switch	x2	PNスイッチ	PIANO ACMP,SCOPE		
*	100	**WG287500**	PN Switch	x4	PNスイッチ 印刷品	METRONOME ON/		
*	110	**WG287700**	PN Switch	x2	PNスイッチ 印刷品	OFF,TEMPO		
*	120	**WG287100**	PN Switch	x12	PNスイッチ 印刷品	SONG MELODY VOICE		
*	130	**WG287800**	PN Switch	x4	PNスイッチ 印刷品	CATEGORY		
*	140	**WF835800**	PN Switch	x4	PNスイッチ	0-9,NO,YES,DELETE,RESET EXIT,REGIST MEMORY,BANK PORTABLE GRAND		
*	150	**WG283500**	PN Switch	x1	PNスイッチ	SPLIT ON/OFF,DUAL ON/OFF,		
*	160	**WG255000**	Circuit Board	PNL	PNLシート	HARMONY ON/OFF		
*	170	**WG255100**	Circuit Board	PNR	PNRシート	DEMO		
*	180	**WG258400**	Circuit Board	DJACK	DJACKシート	(WG25520)(X7137B0)		
*	190	**WG258600**	Circuit Board	PSW	PSWシート	(WG25520)(X7137B0)		
*	200	**WG258700**	Circuit Board	MVR	MVRシート	(WG25900)(X7135B0)		
*	210	**WG258800**	Circuit Board	ENC	ENCシート	(WG25900)(X7135B0)		
*	220	**WG811400**	Circuit Board	DM	DMシート	(WG25900)(X7135B0)		
*	230	**WG317600**	Connector Assembly	20624 BNCD-P=1.0-K	カード電線	(WG25900)(X7135B0)		
*	240	**WG317700**	Connector Assembly	20624 BNCD-P=1.0-K	カード電線	(WG81150)(X7136C0)		
*	250	**WG317800**	Connector Assembly	20624 BNCD-P=1.0-K	カード電線			
*	260	**WG317900**	Connector Assembly	20624 BNCD-P=1.0-K	カード電線			
*	290	**WB092100**	Connector Assembly	BL 2P P=2.0	BL束線			
*	290a	**WB097800**	Sponge	SPONGE 1	防振スポンジ 1		2	
*	320	**WG299100**	LCD	PT	液晶ユニット			
	325	**WH219700**	Sponge		防振スポンジ			
	330	**VA126100**	Adhesive Tape	12X50	粘着テープ	}	10	03
	330	--	Adhesive Tape	MY7# 12X50	PETテープ	} (WB79380)	10	
	340	**VY793100**	Wheel Assembly	PSR730	ホイールAss'y			04
	340a	**VY750800**	Wheel	PSR730	ホイール	PITCH BEND		03
	340b	**VT440100**	Spring	PSR620	ホイールバネ			03
*	350	**WG258500**	Circuit Board	PB	PBシート	(WG25900)(X7135B0)		
	360	**VE968500**	Grease	G-31KA	グリス			38
	370	**WG455700**	Encoder Knob	BLACK	エンコーダツマミ	DATA ENTRY		
	380	**VU432400**	Knob,V	PSR78	Vツマミ	MASTER VOLUME		01
	390	**V7151200**	Push Knob	BLACK	プッシュツマミ クロ	STANDBY/ON		01
	400	--	Cushion	80X8X2	クッション(PE)	(WH39010)	2	
	405	--	Cushion	125X8X2	クッション(PE)	(WH39020)	2	
*	410	**WG258300**	Circuit Board	AM	AMシート	(WG25900)(X7135B0)		
	420	--	Lower Case Assembly		下ケースAss'y	(WF83940)		
*	430	**WG300900**	Bottom Board		底板		2	
	432	--	Cushion	PE 515X35X1	クッション(PE)	(WH22010)	4	
	434	--	Cushion	PE 118.5X15X1	クッション(PE)	(WH22000)	4	
	440	**WD365700**	Sponge		スポンジ		2	01
	450	--	Front Rail		口棒レール	(WF83650)	3	
	460	--	Angle	GHL	GHLアングル	(WF83660)	2	
*	470	**WG707300**	Keyboard Assembly	W/WIRING A88 K6	GHL鍵盤束線付C			
	480	**WE774300**	Bind Head Tapping Screw-B	3.0X8 MFZN2W3	Bタイト十BIND		77	01
	500	**WE981200**	Bind Head Tapping Screw-B	4.0X12 MFZN2W3	Bタイト十BIND		36	01
	510	**WF154100**	Bind Head Tapping Screw-B	4.0X16 MFZN2W3	Bタイト十BIND		66	01
*	520	**WE987300**	Flat Head Tapping Screw-B	3.0X12 MFZN2B3	Bタイト十FLAT		6	
*	530	**WG461300**	Circuit Board	MKO	MKOシート	(WG25900)(X7135B0)		
*	540	**WG301100**	Damper Sheet	L	防振シートL			
*	550	**WG301200**	Damper Sheet	R	防振シートR			
	560	**WF489300**	Bind Head Tapping Screw-B	3.0X20 MFZN2W3	Bタイト十BIND		8	01
*		**WF839200**	Upper Case Assembly		上ケースAss'y	DGX-620		

* : New part

RANK : Japan only

	REF NO.	PART NO.	DESCRIPTION		部品名	REMARKS	QTY	RANK
*		**WG394400**	Upper Case Assembly		上ケースAss'y	YPG-625		
	U10	**--**	Upper Case		上ケース塗装印刷品	DGX-620 (WG29640)		
	U10	**--**	Upper Case		上ケース塗装印刷品	YPG-625 (WG29650)		
*	U20	**WG297400**	Speaker Grille L	LEFT	SPグリルL塗装品			
*	U30	**WG297500**	Speaker Grille R	RIGHT	SPグリルR塗装品			
	U40	**WH198300**	Nonwoven Fabric Cloth	460X6X0.35	不織布SP-GRIL		8	
*	U70	**WG297300**	Felt	88KEY	フェルト			
*	U80	**WG457100**	KB Holder Assembly		鍵盤押さえ印刷品			
*	U90	**WF837000**	Key Block L	LEFT 33 189 72	拍子木L			
*	U100	**WF837100**	Key Block R	RIGHT 33 189 72	拍子木R			
	U110	**WE970800**	Bind Head Tapping Screw-1	3.5X10 MFZN2W3	TP#1十BIND		15	01
	U120	**--**	PB Escutcheon Assembly		PBエスカ Ass'y	(WG33280)		
	U120a	**--**	Adhesive Tape	#500 65X3	両面粘着テープ	(WG33290)	2	
	U130	**--**	Edge Cloth	30X10X0.35	エッジクロス	(WH19840)	2	
	U140	**--**	Edge Cloth	70X7X0.35	エッジクロス	DGX-620 (WH21990)		
	U140	**--**	Edge Cloth	56X4X0.35	エッジクロス	YPG-625 (WH21980)		
			ACCESSORIES		付属品			
		V8696800	Music Rest		譜面板			05
		X7225A00	CD-ROM	DGX ENTRY-H	CD-ROM	DGX-620 E,U,C,B,N,O		
						YPG-625 E,U,C,B		
		--	Foot Pedal	IN PLASTIC BAG	フットペダル	(VJ07000)		
⚠		**V8029200**	AC Adapter	PA-5D E	ACアダプター	E		08
⚠		**V8029100**	AC Adapter	PA-5D U	ACアダプター	U,C		08
⚠		**V8029300**	AC Adapter	PA-5D GBR	ACアダプター	B		09
⚠		**WF324900**	AC Adapter	PA-5D CHN	ACアダプター	DGX-620 O		08
*		**WG354200**	Chinese Guide Sheet		中文シート袋入り	DGX-620 O		
	A1	**WG889000**	Stand Pipe Assembly	CL	スタンドパイプAss'y			12
	A1a	**--**	Stand Pipe		スタンドパイプ	(WG88890)		
	A1b	**--**	Cap	CAP J3020	キャップ	(WG90120)	2	
	A2	**WG903600**	Screw Set	CL	ネジセット			
	A2a	**--**	Bind Head Tapping Screw-B	4.0X45 MFZN2B3	Bタイト十BIND	(WG90130)	6	
		--	Stand Assembly		スタンドAss'y			

* : New parts

RANK : Japan only

■ STAND ASSEMBLY

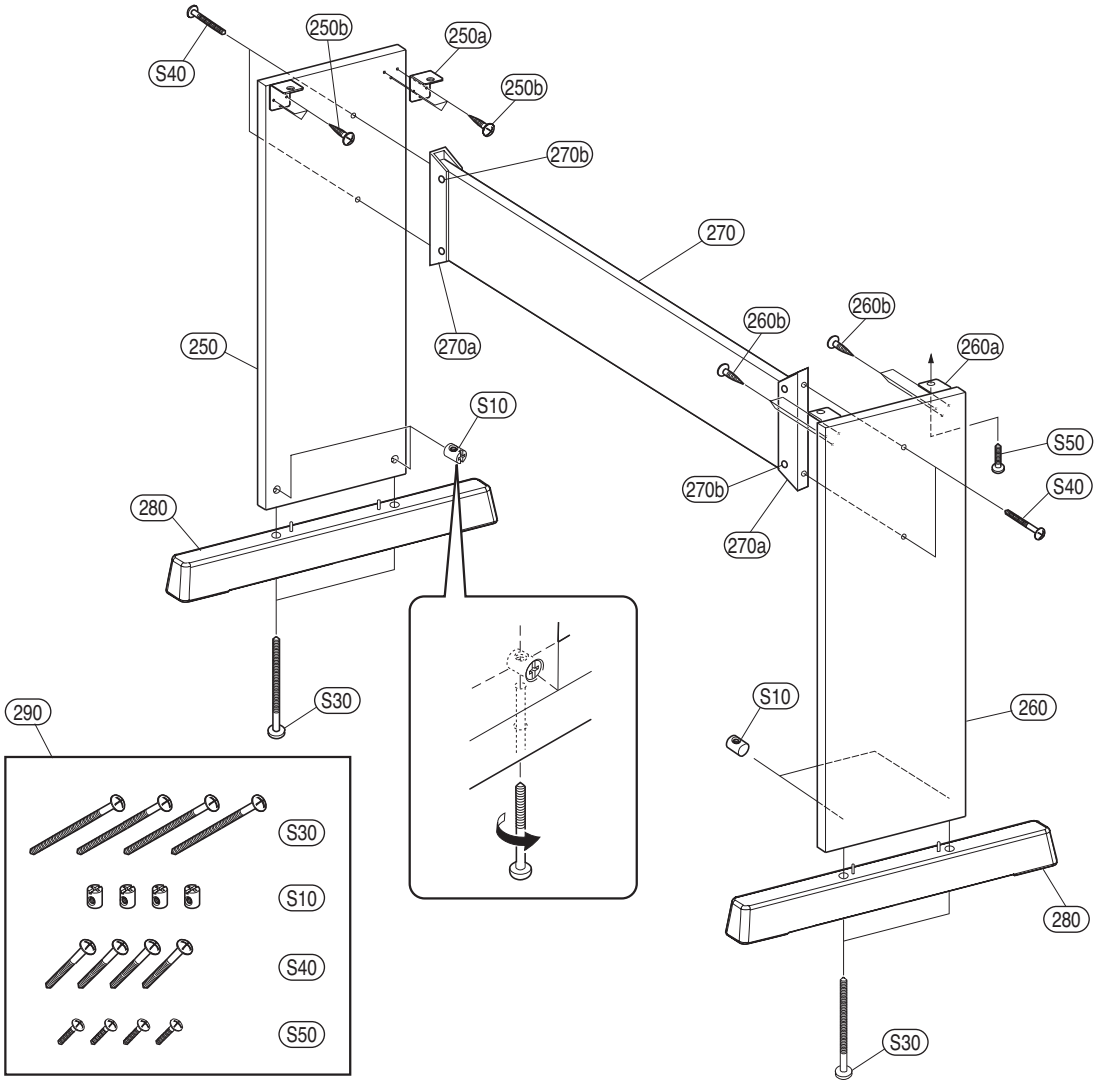

	REF NO.	PART NO.	DESCRIPTION		部品名	REMARKS	QTY	RANK
			STAND ASSEMBLY		スタンドAss'y	DGX-620/YPG-625		
		--	Stand Assembly		スタンドAss'y			
*	250	**WG294400**	Side Board Assembly L	LEFT	側板 Ass'y L			
	250a	**V8390100**	Angle Bracket, ST	2.0 L MFZN2B	ST. アングル		2	02
	250b	**WE970700**	Bind Head Tapping Screw-1	3.5X16 MFZN2W3	TP#1十BIND		6	01
*	260	**WG350200**	Side Board Assembly R	RIGHT	側板 Ass'y R			
	260a	**V8390100**	Angle Bracket, ST	2.0 L MFZN2B	ST. アングル		2	02
	260b	**WE970700**	Bind Head Tapping Screw-1	3.5X16 MFZN2W3	TP#1十BIND		6	01
*	270	**WG295100**	Stand Rail Assembly		框 Ass'y			
	270a	**WA694800**	Angle Bracket		框補強金具		2	04
	270b	**WE970700**	Bind Head Tapping Screw-1	3.5X16 MFZN2W3	TP#1十BIND		8	01
	280	**WD054300**	Stand Base		妻土台袋入		2	04
	290	**WD054400**	Screw Set		ネジセット			06
		WD054400	Screw Set		ネジセット			06
	S10	**WF559100**	Special Nut	6.0X13	ナット 特殊		4	01
	S30	**WF492300**	Truss Head Screw	6.0X70 MFZN2B3	特注ネジ十TRUS		4	01
	S40	**WF052900**	Truss Head Screw	6.0X30 MFZN2W3	特注ネジ十TRUS		4	01
	S50	**WF492400**	Truss Head Screw	5.0X16 MFZN2W3	小ネジ十TRUS		4	01

* : New part

RANK : Japan only

■ LOWER CASE ASSEMBLY

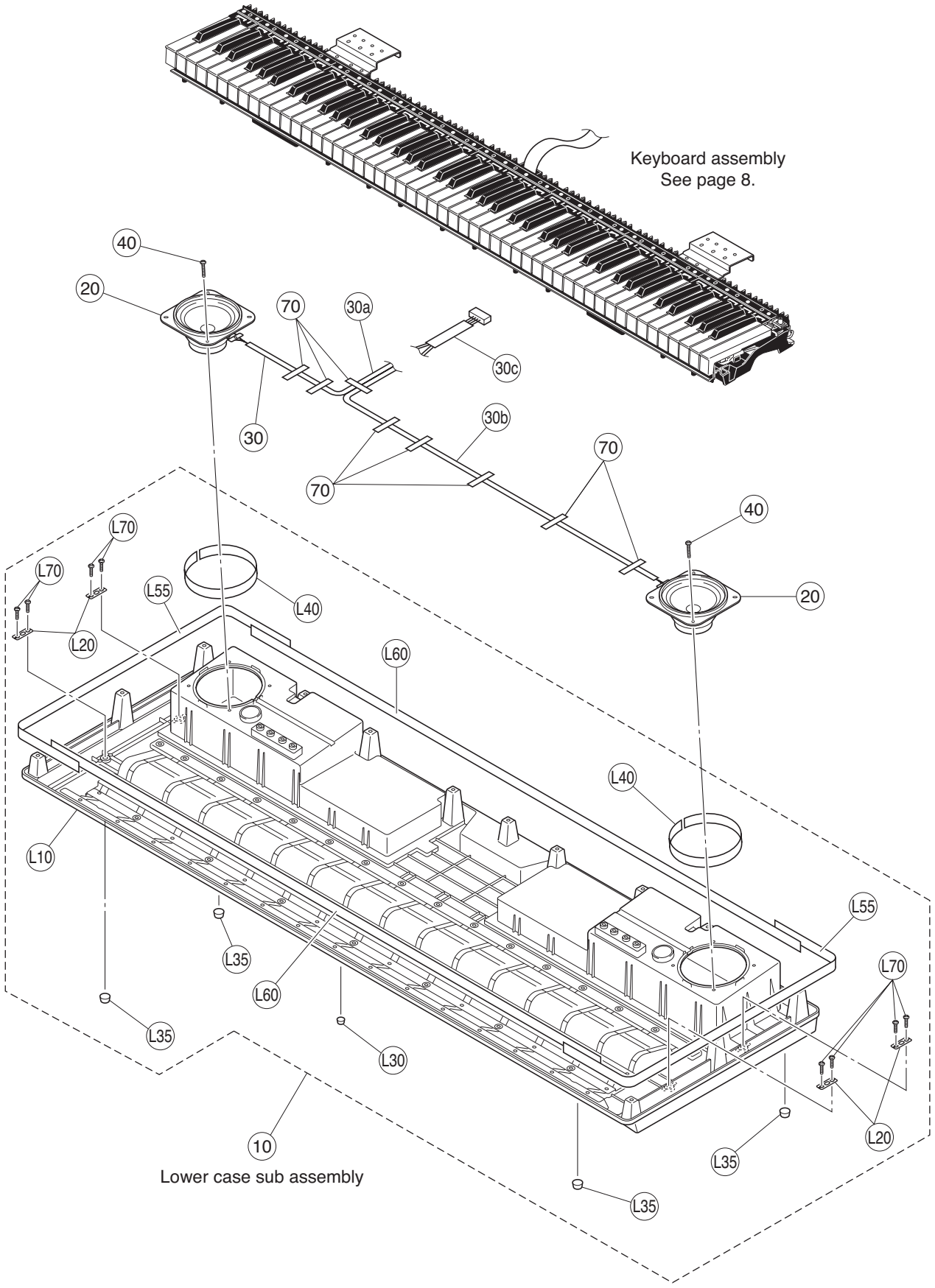

	REF NO.	PART NO.	DESCRIPTION		部品名	REMARKS	QTY	RANK
			LOWER CASE ASSEMBLY		下ケースAss'y	DGX-620/YPG-625		
*		--	Lower Case Assembly		下ケースAss'y	(WF83940)		
*	10	WF839500	Lower Case Sub Assembly		下ケースサブAss'y			
*	20	X7430A00	Speaker	12.0cm 4 ohm 10W	スピーカ	WOOFER	2	
	30	--	Connector Assembly	SP2	SP2束線Ass'y	(WG45880)		
	30a	--	Sponge	8	防振スポンジ8	(WG46020)	2	
	30b	--	Sponge	9	防振スポンジ9	(WG46030)	2	
	30c	--	Sponge	7	防振スポンジ7	(WG46010)	2	
	40	WE981200	Bind Head Tapping Screw-B	4.0X12 MFZN2W3	BタイトBIND		8	01
	70	VA126100	Adhesive Tape	12X50	粘着テープ		8	03
	70	--	Adhesive Tape	MY7# 12X50	PETテープ	(WB79380)	8	
*		WF839500	Lower Case Sub Assembly		下ケースサブAss'y			
	L10	--	Lower Case		下ケース成型品	(WF83410)		
	L20	VI104400	Holder		脚取り付け金具天津製		4	
	L30	CB043750	Foot	T1.6	ゴム脚			01
	L35	V9281800	Foot	T1.6	ゴム脚		4	01
	L40	--	Seal Tape	395X8X1	シールテープSP	(WG31740)	2	
	L55	--	Cushion	700X20X1	クッション（PE）	(WH19450)	2	
	L60	--	Cushion	1200X20X2	クッション（PE）	(WH19440)	2	
	L70	WE774300	Bind Head Tapping Screw-B	3.0X8 MFZN2W3	BタイトBIND		8	01

* : New part

RANK : Japan only

■ KEYBOARD ASSEMBLY

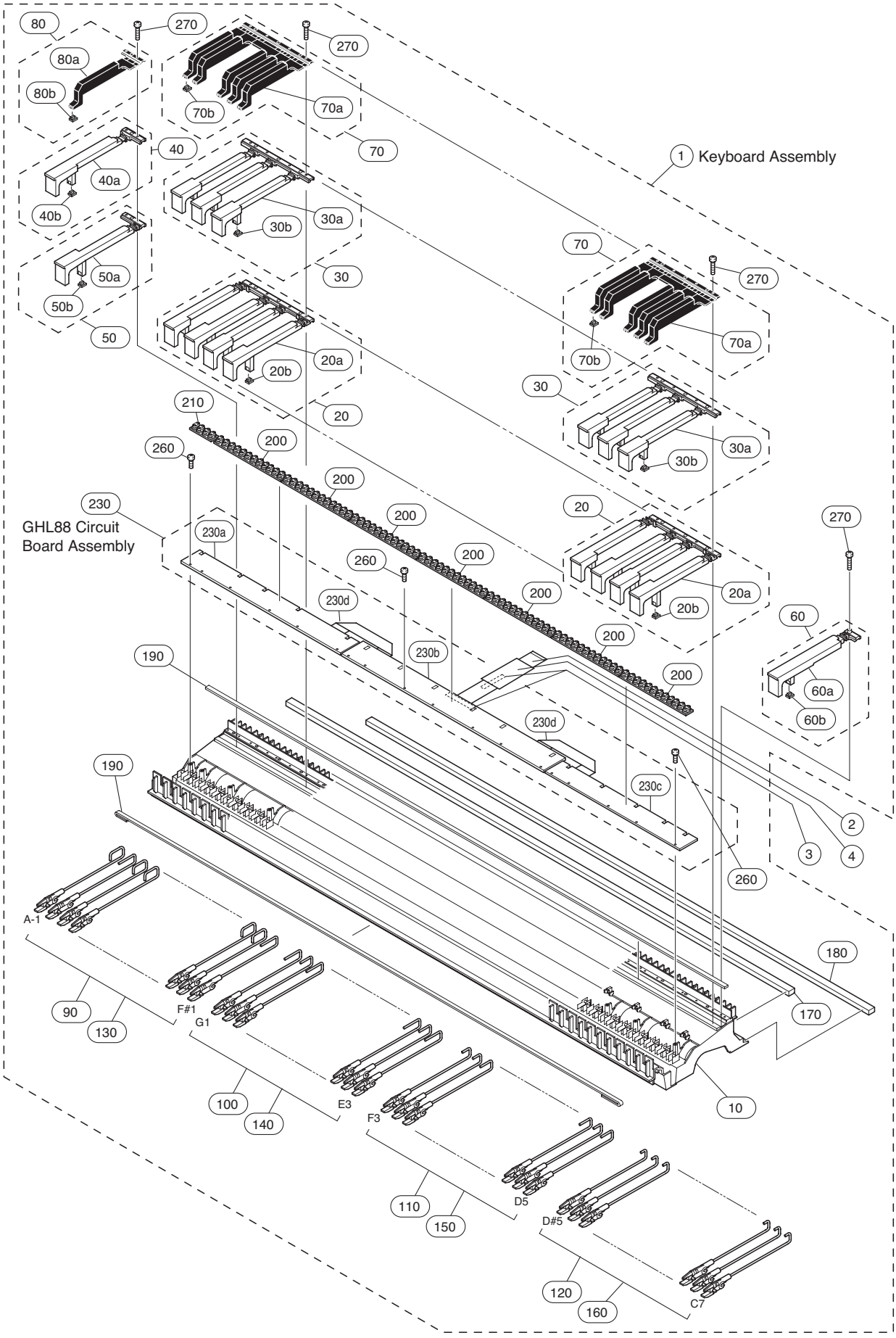

	REF NO.	PART NO.	DESCRIPTION		部品名	REMARKS	QTY	RANK
			KEYBOARD ASSEMBLY		ＧＨＬ鍵盤束線付Ｃ	DGX-620/YPG-625		
*		**WG707300**	Keyboard Assembly	GHL-C A88 K6	ＧＨＬ鍵盤束線付Ｃ			
	1	**--**	Keyboard Assembly	GHL A88 K6	ＧＨＬ鍵盤Ａｓｓ’ｙ	(WF15380)		24
*	2	**WG318100**	Connector Assembly	20624 BNCD-P=1.0-K	カ　ー　ド　電　線			
	3	**--**	Filament Tape	12mmX50mm	フィラメントテープ	(WG47940)	2	
	4	**--**	Vibration-proof Sponge	11	防振スポンジ１１	(WG46990)	2	
		--	Keyboard Assembly	A88 K6	ＧＨＬ鍵盤Ａｓｓ’ｙ	(WF15380)		24
	10	**--**	Frame	A88	フ　レ　ー　ム　８　８	(WF15050)		
	20	**WG491100**	White Key Assembly	CEGB	ＣＥＧＢ白鍵Ａｓｓ’ｙ		7	
	20a	**--**	White Key	CEGB	白　鍵　Ｃ　Ｅ　Ｇ　Ｂ	(WF16320)	7	
	20b	**WG437600**	Actuate Rubber	GHL	駆　動　ラ　バ　ー		4	
	30	**WG491200**	White Key Assembly	DFA	ＤＦＡ白鍵Ａｓｓ’ｙ		7	
	30a	**--**	White Key	DFA	白　鍵　Ｄ　Ｆ　Ａ	(WF16340)	7	
	30b	**WG437600**	Actuate Rubber	GHL	駆　動　ラ　バ　ー		3	
	40	**WG491300**	White Key Assembly	WHITE A	Ａ白鍵Ａｓｓ’ｙ			
	40a	**--**	White Key	A	白　鍵　Ａ	(WF16420)		
	40b	**WG437600**	Actuate Rubber	GHL	駆　動　ラ　バ　ー			
	50	**WG491400**	White Key Assembly	WHITE B	Ｂ白鍵Ａｓｓ’ｙ			
	50a	**--**	White Key	B	白　鍵　Ｂ	(WF16430)		
	50b	**WG437600**	Actuate Rubber	GHL	駆　動　ラ　バ　ー			
	60	**WG491500**	White Key Assembly	WHITE C	Ｃ白鍵Ａｓｓ’ｙ			
	60a	**--**	White Key	C	白　鍵　Ｃ	(WF16440)		
	60b	**WG437600**	Actuate Rubber	GHL	駆　動　ラ　バ　ー			
	70	**WG491600**	Black Key Assembly	BLACK	黒鍵Ａｓｓ’ｙ		7	
	70a	**--**	Black Key		黒　鍵	(WF16450)	7	
	70b	**WG437600**	Actuate Rubber	GHL	駆　動　ラ　バ　ー		5	
	80	**WG491700**	Black Key Assembly	BLACK A#	Ａ＃黒鍵Ａｓｓ’ｙ			
	80a	**--**	Black Key	A#	黒　鍵　Ａ　＃	(WF16460)		
	80b	**WG437600**	Rubber	GHL	駆　動　ラ　バ　ー			
	90	**WF151400**	Hammer Assembly,White Key	W1	ハンマー　Ｗ　１		13	
	100	**WF151500**	Hammer Assembly,White Key	W2	ハンマー　Ｗ　２		13	
	110	**WF151600**	Hammer Assembly,White Key	W3	ハンマー　Ｗ　３		13	
	120	**WF151700**	Hammer Assembly,White Key	W4	ハンマー　Ｗ　４		13	
	130	**WF151800**	Hammer Assembly,Black Key	B1	ハンマー　Ｂ　１		9	
	140	**WF151900**	Hammer Assembly,Black Key	B2	ハンマー　Ｂ　２		9	
	150	**WF152000**	Hammer Assembly,Black Key	B3	ハンマー　Ｂ　３		9	
	160	**WF152100**	Hammer Assembly,Black Key	B4	ハンマー　Ｂ　４		9	
	170	**WF212000**	Stopper	U88	ストッパー　Ｕ　８　８			07
	180	**WF211800**	Stopper	L88	ストッパー　Ｌ　８　８			05
	190	**--**	Limmit Stopper	88	リミットストッパー	(WF21190)	2	
	200	**WF212200**	Rubber Contact	GHL OCT 2M	接点ゴム　Ｏ　Ｃ　Ｔ	C#0-C1,C#1-C2,C#2-C3, C#3-C4,C#4-C5,C#5-C6, C#6-C7	7	04
	210	**WF212400**	Rubber Contact	GHL A-C 2M	接点ゴム　Ａ　ー　Ｃ	A-1-C0		05
	230	**--**	Circuit Board Assembly	GHL88	ＧＨＬ８８シート	(WG31750)		
	230a	**WF212500**	Circuit Board	GHL88L	ＧＨＬ８８シートＬ	(WF46230)(X6244D0)		13
	230b	**WF212600**	Circuit Board	GHL88M	ＧＨＬ８８シートＭ	(WF46240)(X6245G0)		13
	230c	**WF212800**	Circuit Board	GHL88H	ＧＨＬ８８シートＨ	(WF46250)(X6246D0)		12
	230d	**--**	Connector Assembly	17P	中　継　束　線	(WF21290)	2	
	260	**WF267300**	Bind Head Tapping Screw-P	2.6X8 MFZN2W3	Ｐタイト十ＢＩＮＤ		18	01
	270	**WE973000**	Bind Head Tapping Screw-P	3.0X16 MFZN2W3	Ｐタイト十ＢＩＮＤ		31	01
	290	**--**	Grease	G-1030Y	グ　リ　ス	(WC77150)		

* : New part

RANK : Japan only

● **Hammer, white key**

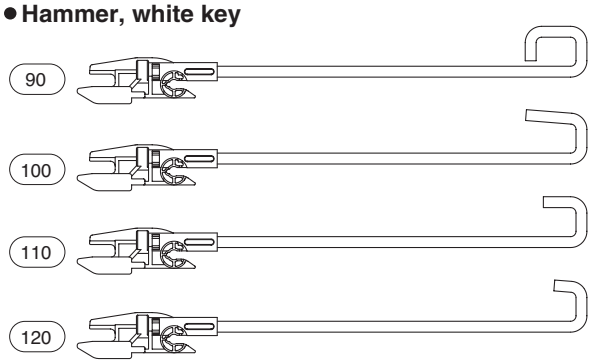

● **Hammer, black key**

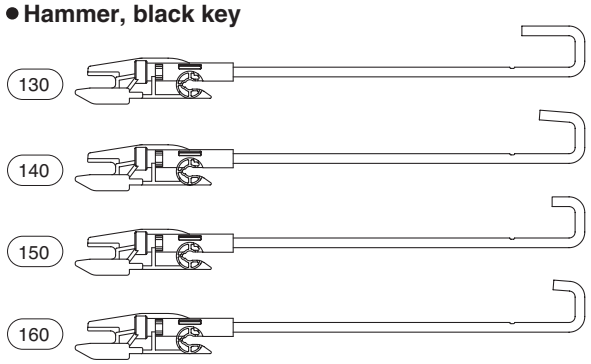

■ FOOT PEDAL

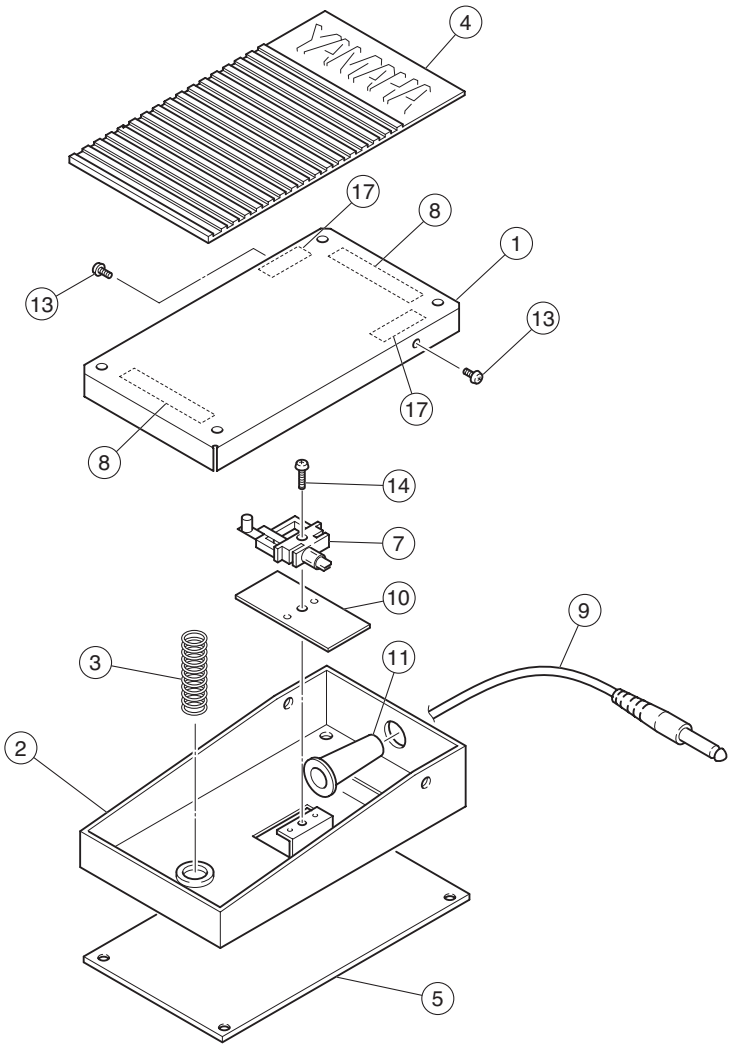

REF NO.	PART NO.	DESCRIPTION		部品名	REMARKS	QTY	RANK
		FOOT PEDAL		フットペダル	DGX-620/YPG-625		
	--	Foot Pedal	IN PLASTIC BAG	フットペダル	(VJ07000)		
1	**AA812880**	Upper Pedal Cover		ペダル上蓋			05
2	**AA812890**	Lower Pedal Cover		ペダル底蓋			03
2	--	Lower Pedal Cover	MADE IN CHINA	ペダル底蓋（中国製）	(WG49650)		
3	**AA812900**	Pedal Spring		ペダルバネ			03
4	**CB815140**	Upper Cover Mat		上蓋マット			03
5	**CB815150**	Lower Cover Mat		底蓋マット			05
7	**NB037130**	Switch Assembly		スイッチアセンブリー	FOOT PEDAL		05
8	--	Felt	50X10X1.5	フェルトクロ	(CC01476)	2	
9	**MI801120**	Cord	1.9m 2SHIN6.3PURAG	ケーブル加工品			05
10	**CA800450**	Fiber Washer		ファイバーワッシャー			01
11	--	Tube	AWG#4 D..2	UL．CSAチューブ	(CH00219)		
13	**WF493200**	Special Screw	4.0X10 MFZN2B3	特注ネジ		2	01
14	**WE967500**	Pan Head Screw	3.0X12 MFZN2W3	小ネジ＋PAN			01
16	--	Grease	G-30H	シリコングリス	(0412108)		
17	--	Felt	BLACK 20X10X1.5	フェルトクロ	(CC01479)	2	

* : New parts

RANK : Japan only

■ ELECTRICAL PARTS

	REF NO.	PART NO.	DESCRIPTION		部品名	REMARKS	QTY	RANK
			ELECTRICAL PARTS		電気部品	DGX-620/YPG-625		
*		**WG258300**	Circuit Board	AM	AMシート	(WG25900)(X7135B0)		
*		**WG258400**	Circuit Board	DJACK	DJACKシート	(WG25900)(X7135B0)		
*		**WG258800**	Circuit Board	ENC	ENCシート	(WG25900)(X7135B0)		
*		**WG461300**	Circuit Board	MKO	MKOシート	(WG25900)(X7135B0)		
*		**WG258700**	Circuit Board	MVR	MVRシート	(WG25900)(X7135B0)		
*		**WG258500**	Circuit Board	PB	PBシート	(WG25900)(X7135B0)		
*		**WG258600**	Circuit Board	PSW	PSWシート	(WG25900)(X7135B0)		
*		**WG258900**	Circuit Board	TW	TWシート	(WG25900)(X7135B0)		
*		**WG811400**	Circuit Board	DM	DMシート	(WG81150)(X7136C0)		
		WF212800	Circuit Board	GHL88H	GHL88シートH	(WF46250)(X6246D0)		12
		WF212500	Circuit Board	GHL88L	GHL88シートL	(WF46230)(X6244D0)		13
		WF212600	Circuit Board	GHL88M	GHL88シートM	(WF46240)(X6245G0)		13
*		**WG255000**	Circuit Board	PNL	PNLシート	(WG25520)(X7137B0)		
*		**WG255100**	Circuit Board	PNR	PNRシート	(WG25520)(X7137B0)		
*		**WG258300**	Circuit Board	AM	AMシート	(WG25900)(X7135B0)		
*		**WG258400**	Circuit Board	DJACK	DJACKシート	(WG25900)(X7135B0)		
*		**WG258800**	Circuit Board	ENC	ENCシート	(WG25900)(X7135B0)		
*		**WG461300**	Circuit Board	MKO	MKOシート	(WG25900)(X7135B0)		
*		**WG258700**	Circuit Board	MVR	MVRシート	(WG25900)(X7135B0)		
*		**WG258500**	Circuit Board	PB	PBシート	(WG25900)(X7135B0)		
*		**WG258600**	Circuit Board	PSW	PSWシート	(WG25900)(X7135B0)		
*		**WG258900**	Circuit Board	TW	TWシート	(WG25900)(X7135B0)		
		VA078900	Jumper Wire	0.55 TIN	ジャンパー線		20	
	10	**WE774300**	Bind Head Tapping Screw-B	3.0X8 MFZN2W3	Bタイト十BIND		4	01
	20	**--**	Grease	G-746	シリコングリス	(0412125)		
	20	**--**	Grease	X-113A G746	シリコングリス	(VA79810)		
	30	**--**	Nonwoven Fabric Cloth	35X4X0.35	不織布	(V472450)	2	
	40	**--**	Nonwoven Fabric Cloth	50X3X0.35	不織布	(WH21960)	2	
	C101	**UA354470**	Mylar Capacitor	0.0470 50V J RX TP	マイラーコン			
	C101	**UA654470**	Mylar Capacitor	0.0470 50V J RX TP	マイラーコン			01
	C102	**UA354470**	Mylar Capacitor	0.0470 50V J RX TP	マイラーコン			
	C102	**UA654470**	Mylar Capacitor	0.0470 50V J RX TP	マイラーコン			01
*	C103	**V3773100**	Electrolytic Cap.	4700.0 25.0V FORM.	ケミコン			
	C103	**VK373000**	Electrolytic Cap.	4700 25.0V TATEJI	ケミコン			03
	C104	**UR867100**	Electrolytic Cap.	10.00 50.0V RX TP	ケミコン			01
*	C104	**V3512300**	Electrolytic Cap.	10.00 50.0V TP	ケミコン			
	C105	**UR867100**	Electrolytic Cap.	10.00 50.0V RX TP	ケミコン			01
*	C105	**V3512300**	Electrolytic Cap.	10.00 50.0V TP	ケミコン			
	C106	**VC694800**	Semiconductive Cera. Cap.	0.1000 25V Z TATET	半導体セラコン			01
	C106	**VM902400**	Semiconductive Cera.Cap.	0.1000 25V Z FORM.	半導体セラコン 天津			01
	C107	**VC694800**	Semiconductive Cera. Cap.	0.1000 25V Z TATET	半導体セラコン			01
	C107	**VM902400**	Semiconductive Cera.Cap.	0.1000 25V Z FORM.	半導体セラコン 天津			01
	C108	**VC694800**	Semiconductive Cera. Cap.	0.1000 25V Z TATET	半導体セラコン			01
	C108	**VM902400**	Semiconductive Cera.Cap.	0.1000 25V Z FORM.	半導体セラコン 天津			01
	C109	**VC694800**	Semiconductive Cera. Cap.	0.1000 25V Z TATET	半導体セラコン			01
	C109	**VM902400**	Semiconductive Cera.Cap.	0.1000 25V Z FORM.	半導体セラコン 天津			01
	C110	**WF405000**	Electrolytic Cap.	100.00 10.0V TATET	ケミコン			
*	C110	**WF448900**	Electrolytic Cap.	100.00 10.0V TATET	ケミコン			
	C111	**WF405000**	Electrolytic Cap.	100.00 10.0V TATET	ケミコン			
*	C111	**WF448900**	Electrolytic Cap.	100.00 10.0V TATET	ケミコン			
	C201	**UA353100**	Mylar Capacitor	1000P 50V J RX TP	マイラーコン			01
	C201	**UA653100**	Mylar Capacitor	1000P 50V J RX TP	マイラーコン			03
	C202	**UA353100**	Mylar Capacitor	1000P 50V J RX TP	マイラーコン			01
	C202	**UA653100**	Mylar Capacitor	1000P 50V J RX TP	マイラーコン			03
	C203	**V5515200**	Mylar Capacitor	0.0680 50V J	マイラーコン			
	C203	**VE325800**	Monolithic Mylar Capacitor	0.068 50V J RX TP	積層マイラーコン			
	C204	**V5515200**	Mylar Capacitor	0.0680 50V J	マイラーコン			
	C204	**VE325800**	Monolithic Mylar Capacitor	0.068 50V J RX TP	積層マイラーコン			
	C205	**UA352470**	Mylar Capacitor	470P 50V J RX TP	マイラーコン			01
	C205	**UA652470**	Mylar Capacitor	470P 50V J RX TP	マイラーコン			01
	C206	**UA352470**	Mylar Capacitor	470P 50V J RX TP	マイラーコン			01
	C206	**UA652470**	Mylar Capacitor	470P 50V J RX TP	マイラーコン			01
	C207	**UR838100**	Electrolytic Cap.	100.00 16.0V RX TP	ケミコン			01
	C207	**V3508500**	Electrolytic Cap.	100.00 16.0V TP	ケミコン			
	C208	**V3511900**	Electrolytic Cap.	1.00 50.0V TP	ケミコン			
	C208	**UR866100**	Electrolytic Cap.	1.00 50.0V RX TP	ケミコン			
	C209	**UR867100**	Electrolytic Cap.	10.00 50.0V RX TP	ケミコン			01
*	C209	**V3512300**	Electrolytic Cap.	10.00 50.0V TP	ケミコン			

* : New part

RANK : Japan only

	REF NO.	PART NO.	DESCRIPTION		部品名	REMARKS	QTY	RANK
	C210	**VC694800**	Semiconductive Cera. Cap.	0.1000 25V Z TATET	半導体セラコン			01
	C210	**VM902400**	Semiconductive Cera.Cap.	0.1000 25V Z FORM.	半導体セラコン 天津			01
	C211	**UR867100**	Electrolytic Cap.	10.00 50.0V RX TP	ケミコン			01
*	C211	**V3512300**	Electrolytic Cap.	10.00 50.0V TP	ケミコン			
	C212	**UA355100**	Mylar Capacitor	0.1000 50V J RX TP	マイラーコン			01
*	C212	**V5515400**	Mylar Capacitor	0.1000 50V J	マイラーコン			
	C212	**VR168300**	Monolithic Mylar Capacitor	ECQ-V1H104JL3	積層マイラーコン			01
	C213	**UA355100**	Mylar Capacitor	0.1000 50V J RX TP	マイラーコン			01
*	C213	**V5515400**	Mylar Capacitor	0.1000 50V J	マイラーコン			
	C213	**VR168300**	Monolithic Mylar Capacitor	ECQ-V1H104JL3	積層マイラーコン			01
	C214	**UA355100**	Mylar Capacitor	0.1000 50V J RX TP	マイラーコン			01
*	C214	**V5515400**	Mylar Capacitor	0.1000 50V J	マイラーコン			
	C214	**VR168300**	Monolithic Mylar Capacitor	ECQ-V1H104JL3	積層マイラーコン			01
	C215	**UA355100**	Mylar Capacitor	0.1000 50V J RX TP	マイラーコン			01
*	C215	**V5515400**	Mylar Capacitor	0.1000 50V J	マイラーコン			
	C215	**VR168300**	Monolithic Mylar Capacitor	ECQ-V1H104JL3	積層マイラーコン			01
	C216	**UR837330**	Electrolytic Cap.	33.00 16.0V RX TP	ケミコン			01
*	C216	**V3508300**	Electrolytic Cap.	33.00 16.0V TP	ケミコン			
	C217	**UR837330**	Electrolytic Cap.	33.00 16.0V RX TP	ケミコン			01
*	C217	**V3508300**	Electrolytic Cap.	33.00 16.0V TP	ケミコン			
	CN101	**VK024800**	Wire Trap	52147 4P TE	ワイヤートラップ			01
	CN102	**VK024600**	Wire Trap	52147 2P TE	ワイヤートラップ			01
	CN103	**VK024700**	Wire Trap	52147 3P TE	ワイヤートラップ			01
	CN104	**WD369900**	FFC Connector	52806-1910 19PIN	FFCコネクタ			01
	CN201	**VI878000**	Cable Holder	51048 2P TE	ケーブルホルダー			01
	CN201	**VY668300**	Cable Holder	51048 2P TE	ケーブルホルダー天津			
	CN202	**VI878000**	Cable Holder	51048 2P TE	ケーブルホルダー			01
	CN202	**VY668300**	Cable Holder	51048 2P TE	ケーブルホルダー天津			
	CN203	**LB918040**	Base Post Connector	XH 4P TE	ベーススツキポスト			01
	CN204	**VK024900**	Wire Trap	52147 5P TE	ワイヤートラップ			01
	CN301	**VV678400**	Connector , FFC	52806 14P TE	FFCコネクター			01
	CN401	**VI878100**	Cable Holder	51048 3P TE	ケーブルホルダー			01
	CN401	**VZ341600**	Cable Holder	51048 3P TE	ケーブルホルダー天津			
	CN501	**VI878200**	Cable Holder	51048 4P TE	ケーブルホルダー			01
*	CN501	**VY668400**	Cable Holder	51048 4P TE	ケーブルホルダー天津			
	CN601	**VI878300**	Cable Holder	51048 5P TE	ケーブルホルダー			01
	CN601	**VZ341700**	Cable Holder	51048 5P TE	ケーブルホルダー天津			
	CN901	**VI878100**	Cable Holder	51048 3P TE	ケーブルホルダー			01
	CN901	**VZ341600**	Cable Holder	51048 3P TE	ケーブルホルダー天津			
⚠	D101	**V8603100**	Diode	2A02G-01 X0 JI	ダイオード			
⚠	D101	**VV731400**	Diode	2A02-05 X0	ダイオード			01
	EC901	**VU481300**	Encoder	REB161 PVB 15F	16形エンコーダ	DATA ENTRY		03
⚠	FZ001	**WD158000**	Fuse	TSD 4A 250V (P)	ヒューズ			01
	HS001	**--**	Heat Sink		放熱板	(WG29940)		
	IC101	**X5887A00**	IC	BA50BC0T	IC	REGULATOR +5V 1.0A		03
	IC102	**X5887A00**	IC	BA50BC0T	IC	REGULATOR +5V 1.0A		03
	IC201	**XY209A00**	IC	LA4625	IC	POWER AMP 13.5W		05
⚠	JK101	**LB302260**	Connector	HEC0470-01-630	電源コネクタ	DC IN 12V		02
⚠	JK101	**V6557600**	Connector	HTJ-020-05AZ	電源コネクタ			04
	JK201	**LB101870**	Phone Jack	YKB21-5006	ホーンコネクタ	PHONES/OUTPUT		03
	JK201	**VV943300**	Phone Jack	HTJ064-04A	ホーンコネクタ			02
	JK301	**VC687500**	Phone Jack	YKB21-5014 BLK	ホーンコネクタ（黒）	SUSTAIN		01
	JK301	**WE245200**	Phone Jack	JY-6314-01-020 BLK	ホーンコネクタ（黒）			
	JK302	**V6802600**	Jack, USB	USB 4P SE	USBジャック	USB TO HOST		02
	JK302	**WB106700**	Jack, USB	USB 4P TE	USBジャック			
	JK303	**WA245700**	USB Connector	YKF45 4P SE	USBコネクタ	USB TO DEVICE		02
⚠	L101	**V6795600**	Line Filter	BDL40-01	ラインフィルター			
⚠	L101	**VQ884000**	Line Filter	CM08RB01 RX	ラインフィルター			03
	L102	**VA078900**	Jumper Wire	0.55 TIN	ジャンパー線			
	L201	**VB835000**	Coil	FL05RD200AT TATETE	コイル 20U			01
	L201	**VT279200**	Coil	DX001-20UH TATEJI	コイル 20U 天津			
	L202	**VB835000**	Coil	FL05RD200AT TATETE	コイル 20U			01
	L202	**VT279200**	Coil	DX001-20UH TATEJI	コイル 20U 天津			
	L301	**VB835000**	Coil	FL05RD200AT TATETE	コイル 20U			01
	L301	**VT279200**	Coil	DX001-20UH TATEJI	コイル 20U 天津			
	L302	**VB835000**	Coil	FL05RD200AT TATETE	コイル 20U			01
	L302	**VT279200**	Coil	DX001-20UH TATEJI	コイル 20U 天津			
	L303	**VB835000**	Coil	FL05RD200AT TATETE	コイル 20U			01
	L303	**VT279200**	Coil	DX001-20UH TATEJI	コイル 20U 天津			
	L304	**VB835000**	Coil	FL05RD200AT TATETE	コイル 20U			01

* : New parts

RANK : Japan only

	REF NO.	PART NO.	DESCRIPTION		部品名	REMARKS	QTY	RANK
	L304	**VT279200**	Coil	DX001-20UH TATEJI	コイル 20U 天津			
	L305	**VB835000**	Coil	FL05RD200AT TATETE	コイル 20U			01
	L305	**VT279200**	Coil	DX001-20UH TATEJI	コイル 20U 天津			
	L306	**VB835000**	Coil	FL05RD200AT TATETE	コイル 20U			01
	L306	**VT279200**	Coil	DX001-20UH TATEJI	コイル 20U 天津			
	R101	**V2548000**	Carbon Resistor	100.0 1/6J 26TP	カーボン抵抗			
	-104	**V2548000**	Carbon Resistor	100.0 1/6J 26TP	カーボン抵抗			
	R201	**V2550000**	Carbon Resistor	4.7K 1/6J 26TP	カーボン抵抗			
	R202	**V2550000**	Carbon Resistor	4.7K 1/6J 26TP	カーボン抵抗			
	R203	**V2549900**	Carbon Resistor	3.9K 1/6 J 26TP	カーボン抵抗			
	R204	**V2549900**	Carbon Resistor	3.9K 1/6 J 26TP	カーボン抵抗			
*	R205	**V2550900**	Carbon Resistor	27.0K 1/6J 26TP	カーボン抵抗			
	R206	**WD556700**	Flame Proof C. Resistor	2.2 1/4 J TE-26	不燃化カーボン抵抗			01
	-209	**WD556700**	Flame Proof C. Resistor	2.2 1/4 J TE-26	不燃化カーボン抵抗			01
*	R210	**V2547800**	Carbon Resistor	68.0 1/6J 26TP	カーボン抵抗			
*	R211	**V2547800**	Carbon Resistor	68.0 1/6J 26TP	カーボン抵抗			
	R212	**V2548600**	Carbon Resistor	330.0 1/6J 26TP	カーボン抵抗			
	R213	**V2548600**	Carbon Resistor	330.0 1/6J 26TP	カーボン抵抗			
*	R301	**V2549500**	Carbon Resistor	1.8K 1/6 J 26TP	カーボン抵抗			
*	R302	**V2551000**	Carbon Resistor	33.0K 1/6J 26TP	カーボン抵抗			
	R303	**V2550000**	Carbon Resistor	4.7K 1/6 J 26TP	カーボン抵抗			
	SW501	**V9661700**	Push Switch	SY16-32-4(U99S2)/T	プッシュ SW	STANDBY/ON		03
	SW501	**VY980400**	Push Switch	SDDLB15700 J,UC,CE	プッシュ SW			03
	TR301	**WH336700**	Transistor	2SC2062STP	トランジスタ			
	TR301	**WH376600**	Transistor	2SC982TM	トランジスタ			
	VR301	**VV049100**	Rotary Variable Resistor	B 10K RK09K1110	ロータリー VR	CONTRAST		01
	VR401	**VZ486300**	Rotary Variable Resistor	B10K EVJ05DF20B14	ロータリー VR	PITCH BEND		03
	VR601	**WC709800**	Rotary Variable Resistor	A 5.0K XV014111YGP	二連ロータリー VR	MASTER VOLUME		02
	WH201	**--**	Connector Assembly	TWL 2P	TWL 束線	(WG46040)		
	WH202	**--**	Connector Assembly	TWR 2P	TWR 束線	(WG46050)		
	WH401	**--**	Connector Assembly	PB 3P	PB 束線	(WG46060)		
	WH501	**--**	PSW Wire	PSW 4P	PSW 線材	(WG45930)		
	WH601	**--**	Connector Assembly	MVR 5P	MVR 束線	(WG46070)		
	WH901	**--**	Connector Assembly	ENC 3P	ENC 束線	(WB09270)		
*		**WG811400**	Circuit Board	DM	DM シート	(WG81150)(X7136C0)		
	C01	**US145100**	Ceramic Capacitor-F (chip)	0.1000 25V Z RECT.	チップセラ（F）			01
	-47	**US145100**	Ceramic Capacitor-F (chip)	0.1000 25V Z RECT.	チップセラ（F）			01
	C101	**US062220**	Ceramic Capacitor-SL(chip)	220P 50V J RECT.	チップセラ（SL）			01
	C102	**US063470**	Ceramic Capacitor-B (chip)	4700P 50V K RECT.	チップセラ（B）			01
	C103	**UF038100**	Electrolytic Cap. (chip)	100 16V	チップケミコン			01
	C104	**US145100**	Ceramic Capacitor-F (chip)	0.1000 25V Z RECT.	チップセラ（F）			01
	C105	**US061220**	Ceramic Capacitor-CH(chip)	22P 50V J RECT.	チップセラ（CH）			01
	C106	**US061220**	Ceramic Capacitor-CH(chip)	22P 50V J RECT.	チップセラ（CH）			01
	C107	**US145100**	Ceramic Capacitor-F (chip)	0.1000 25V Z RECT.	チップセラ（F）			01
	C108	**US062100**	Ceramic Capacitor-SL(chip)	100P 50V J RECT.	チップセラ（SL）			01
	C109	**US145100**	Ceramic Capacitor-F (chip)	0.1000 25V Z RECT.	チップセラ（F）			01
	-119	**US145100**	Ceramic Capacitor-F (chip)	0.1000 25V Z RECT.	チップセラ（F）			01
	C201	**US145100**	Ceramic Capacitor-F (chip)	0.1000 25V Z RECT.	チップセラ（F）			01
	-208	**US145100**	Ceramic Capacitor-F (chip)	0.1000 25V Z RECT.	チップセラ（F）			01
	C209	**UF037100**	Electrolytic Cap. (chip)	10 16V	チップケミコン			01
	C210	**US145100**	Ceramic Capacitor-F (chip)	0.1000 25V Z RECT.	チップセラ（F）			01
	C211	**UF158100**	Electrolytic Cap. (chip)	100 35V UUR1V1	チップケミコン			
	C211	**WB291100**	Electrolytic Cap. (chip)	35V EEE1VA101UP	チップケミコン			
	C212	**US062390**	Ceramic Capacitor-SL(chip)	390P 50V J RECT.	チップセラ（SL）			01
	C213	**UF038100**	Electrolytic Cap. (chip)	100 16V	チップケミコン			01
	C214	**US062100**	Ceramic Capacitor-SL(chip)	100P 50V J RECT.	チップセラ（SL）			01
	-223	**US062100**	Ceramic Capacitor-SL(chip)	100P 50V J RECT.	チップセラ（SL）			01
	C301	**US145100**	Ceramic Capacitor-F (chip)	0.1000 25V Z RECT.	チップセラ（F）			01
	-303	**US145100**	Ceramic Capacitor-F (chip)	0.1000 25V Z RECT.	チップセラ（F）			01
	C304	**US061270**	Ceramic Capacitor-CH(chip)	27P 50V J RECT.	チップセラ（CH）			01
	C305	**US061220**	Ceramic Capacitor-CH(chip)	22P 50V J RECT.	チップセラ（CH）			01
	C306	**US145100**	Ceramic Capacitor-F (chip)	0.1000 25V Z RECT.	チップセラ（F）			01
	C307	**UF038100**	Electrolytic Cap. (chip)	100 16V	チップケミコン			01
	C308	**UF037100**	Electrolytic Cap. (chip)	10 16V	チップケミコン			01
	C309	**US063100**	Ceramic Capacitor-B (chip)	1000P 50V K RECT.	チップセラ（B）			01
	C310	**US145100**	Ceramic Capacitor-F (chip)	0.1000 25V Z RECT.	チップセラ（F）			01
	C401	**US145100**	Ceramic Capacitor-F (chip)	0.1000 25V Z RECT.	チップセラ（F）			01
	C402	**UF037100**	Electrolytic Cap. (chip)	10 16V	チップケミコン			01
	C403	**US145100**	Ceramic Capacitor-F (chip)	0.1000 25V Z RECT.	チップセラ（F）			01

* : New part

RANK : Japan only

	REF NO.	PART NO.	DESCRIPTION		部品名	REMARKS	QTY	RANK
	C404	**US064100**	Ceramic Capacitor-B (chip)	0.0100 50V K RECT.	チップセラ（B）			01
	C405	**US063270**	Ceramic Capacitor-B (chip)	2700P 50V K RECT.	チップセラ（B）			01
	C406	**US063270**	Ceramic Capacitor-B (chip)	2700P 50V K RECT.	チップセラ（B）			01
	C407	**US064100**	Ceramic Capacitor-B (chip)	0.0100 50V K RECT.	チップセラ（B）			01
	C408	**US063270**	Ceramic Capacitor-B (chip)	2700P 50V K RECT.	チップセラ（B）			01
	C409	**US063270**	Ceramic Capacitor-B (chip)	2700P 50V K RECT.	チップセラ（B）			01
	C410	**UF037100**	Electrolytic Cap. (chip)	10 16V	チップケミコン			01
	C411	**UF066100**	Electrolytic Cap. (chip)	1 50V	チップケミコン			01
	C412	**UF066100**	Electrolytic Cap. (chip)	1 50V	チップケミコン			01
	C413	**US062100**	Ceramic Capacitor-SL(chip)	100P 50V J RECT.	チップセラ（SL）			01
	C414	**US062100**	Ceramic Capacitor-SL(chip)	100P 50V J RECT.	チップセラ（SL）			01
	C501	**UF037100**	Electrolytic Cap. (chip)	10 16V	チップケミコン			01
	C502	**US145100**	Ceramic Capacitor-F (chip)	0.1000 25V Z RECT.	チップセラ（F）			01
	C503	**US063100**	Ceramic Capacitor-B (chip)	1000P 50V K RECT.	チップセラ（B）			01
	C601	**US061470**	Ceramic Capacitor-CH(chip)	47P 50V J RECT.	チップセラ（CH）			01
	-614	**US061470**	Ceramic Capacitor-CH(chip)	47P 50V J RECT.	チップセラ（CH）			01
	C615	**US062100**	Ceramic Capacitor-SL(chip)	100P 50V J RECT.	チップセラ（SL）			01
	C616	**US062100**	Ceramic Capacitor-SL(chip)	100P 50V J RECT.	チップセラ（SL）			01
	C701	**US145100**	Ceramic Capacitor-F (chip)	0.1000 25V Z RECT.	チップセラ（F）			01
	C702	**US145100**	Ceramic Capacitor-F (chip)	0.1000 25V Z RECT.	チップセラ（F）			01
	C703	**US062100**	Ceramic Capacitor-SL(chip)	100P 50V J RECT.	チップセラ（SL）			01
	-729	**US062100**	Ceramic Capacitor-SL(chip)	100P 50V J RECT.	チップセラ（SL）			01
	C801	**US145100**	Ceramic Capacitor-F (chip)	0.1000 25V Z RECT.	チップセラ（F）			01
	-807	**US145100**	Ceramic Capacitor-F (chip)	0.1000 25V Z RECT.	チップセラ（F）			01
	C808	**UF037100**	Electrolytic Cap. (chip)	10 16V	チップケミコン			01
	C809	**US145100**	Ceramic Capacitor-F (chip)	0.1000 25V Z RECT.	チップセラ（F）			01
	C901	**UF038100**	Electrolytic Cap. (chip)	100 16V	チップケミコン			01
	C902	**UF038100**	Electrolytic Cap. (chip)	100 16V	チップケミコン			01
	C903	**US145100**	Ceramic Capacitor-F (chip)	0.1000 25V Z RECT.	チップセラ（F）			01
	-907	**US145100**	Ceramic Capacitor-F (chip)	0.1000 25V Z RECT.	チップセラ（F）			01
	CN201	**WA625700**	Connector , FFC	52793 14P SE	FFCコネクター			
*	CN201	**WF377500**	Connector, FPC	YSF5 14P SE	FPCコネクター			
	CN301	**WA625700**	Connector , FFC	52793 14P SE	FFCコネクター			
*	CN301	**WF377500**	Connector, FPC	YSF5 14P SE	FPCコネクター			
*	CN601	**WD295300**	Connector , FFC	52793 12P SE	FFCコネクター			
*	CN601	**WG951300**	Connector, FPC	YSF5 12P SE	FPCコネクター			
*	CN602	**WD295400**	Connector , FFC	52793 15P SE	FFCコネクター			
*	CN602	**WG951500**	Connector, FPC	YSF5 15P SE	FPCコネクター			
*	CN701	**WG468500**	Connector , FFC	52852 27P SE	FFCコネクター			
*	CN901	**WD295500**	Connector , FFC	52793 19P SE	FFCコネクター			
*	CN901	**WG951700**	Connector, FPC	YSF5 19P SE	FPCコネクター			
	CR701	**WA782100**	Ceramic Resonator	5.000M	セラミック振動子			
	D201	**V2376600**	Diode	RB500V-40 TAPING	ダイオード			01
	DA301	**V9424900**	Diode Array	TE85L	ダイオードアレイ			01
*	DA301	**WH107100**	Diode Array	MA3Z79300L 0.10 X2	ダイオードアレイ			
	DA302	**V9424900**	Diode Array	TE85L	ダイオードアレイ			01
*	DA302	**WH107100**	Diode Array	MA3Z79300L 0.10 X2	ダイオードアレイ			
	DA303	**V9424900**	Diode Array	TE85L	ダイオードアレイ			01
*	DA303	**WH107100**	Diode Array	MA3Z79300L 0.10 X2	ダイオードアレイ			
	DA304	**V9424900**	Diode Array	TE85L	ダイオードアレイ			01
*	DA304	**WH107100**	Diode Array	MA3Z79300L 0.10 X2	ダイオードアレイ			
	IC101	**X6055A00**	IC	YMW767-VTZ	IC	CPU+XG		10
	IC102	**X4374A00**	IC	S-80136ANMC-JCVT2G	IC	RESET		
	IC102	**X5888A00**	IC	BD45365G	IC			01
	IC103	**X0158A00**	IC	SN74AHCT1G08DCKR	IC	AND		01
*	IC103	**X7542A00**	IC	74V1T08CTR	IC			
	IC104	**X0158A00**	IC	SN74AHCT1G08DCKR	IC	AND		01
*	IC104	**X7542A00**	IC	74V1T08CTR	IC			
	IC201	**X5422A00**	IC	S1D13700F01A100	IC	LCD CONTROLLER		08
*	IC202	**X7371A00**	IC	MC34063EBD-TR	IC	DC-DC CONVERTER		
	IC301	**X5879A00**	IC	ISP1161A1BD_118-PB	IC	USB CONTROLLER		09
*	IC302	**X7414A00**	IC	R5520H001A-T1-F	IC	USB HIGH SIDE SWITCH		
	IC401	**X6040A00**	IC	AK4385ET	IC	D/A CONVERTER		03
	IC402	**X2331A00**	IC	NJM4580E(TE2)OPAMP	IC	OPAMP		01
	IC501	**X6905A00**	IC	ADC084S021CIMM	IC	AD CONVERTER		
	IC701	**XZ560100**	IC	UPD789022GB-A15-8E	IC	CPU		04
*	IC802	**X7523100**	IC	MR27T12800L-099TN0	IC	P2ROM 128M(PROG,WAVE)		
	IC803	**X3485B00**	IC	MBM29LV800BE-70PFT	IC			05
	IC803	**X4025D00**	IC	MX29LV800CBTC-70G	IC	FLASH ROM 8M		05
*	IC803	**X7234A00**	IC	S29AL008D70TFI020H	IC			

* : New parts

RANK : Japan only

REF NO.	PART NO.	DESCRIPTION		部品名	REMARKS	QTY	RANK
IC804	**X3860A00**	IC	MSM51V18165F-60T3K	I C			08
IC804	**X4027A00**	IC	MSM51V18165F-50T3K	I C	DRAM 16M		
IC804	**X4028A00**	IC	GLT4160L16P-45TC	I C			08
IC805	**X5647A00**	IC	SN74LV32APWR	I C	OR		01
IC901	**X3679A00**	IC	RH5RZ25CA-T1-F	I C	REGULATOR +2.5V		03
IC902	**X5889A00**	IC	BA33BC0FP	I C	REGULATOR +3.3V		03
L101	**VY657200**	Chip Inductance	600 BK1608HM601-T	チップインダクタ			01
* L201	**WF765300**	Chip Inductance	150U SLF7045T-151M	チップインダクタ			
* L301	**WH203100**	Chip Inductance	DLP11SN331HL2L 1	チップインダクタ			
L901	**VY657200**	Chip Inductance	600 BK1608HM601-T	チップインダクタ			01
R101	**RD357470**	Carbon Resistor (chip)	47.0K 63M J RECT.	チップ抵抗			01
R102	**RD357470**	Carbon Resistor (chip)	47.0K 63M J RECT.	チップ抵抗			01
R103	**RD357100**	Carbon Resistor (chip)	10.0K 63M J RECT.	チップ抵抗			01
R104	**RD357470**	Carbon Resistor (chip)	47.0K 63M J RECT.	チップ抵抗			01
R105	**RD356100**	Carbon Resistor (chip)	1.0K 63M J RECT.	チップ抵抗			01
R106	**RD355470**	Carbon Resistor (chip)	470.0 63M J RECT.	チップ抵抗			01
R107	**RD359100**	Carbon Resistor (chip)	1.0M 63M J RECT.	チップ抵抗			01
R108	**RD357470**	Carbon Resistor (chip)	47.0K 63M J RECT.	チップ抵抗			01
R109	**RD355100**	Carbon Resistor (chip)	100.0 63M J RECT.	チップ抵抗			01
R110	**RD355100**	Carbon Resistor (chip)	100.0 63M J RECT.	チップ抵抗			01
R111	**RD350000**	Carbon Resistor (chip)	0 63M J RECT.	チップ抵抗			01
R112	**RD350000**	Carbon Resistor (chip)	0 63M J RECT.	チップ抵抗			01
R113	**RD357470**	Carbon Resistor (chip)	47.0K 63M J RECT.	チップ抵抗			01
R114	**RD357470**	Carbon Resistor (chip)	47.0K 63M J RECT.	チップ抵抗			01
R115	**RD355100**	Carbon Resistor (chip)	100.0 63M J RECT.	チップ抵抗			01
R116	**RD355100**	Carbon Resistor (chip)	100.0 63M J RECT.	チップ抵抗			01
R201	**RD357470**	Carbon Resistor (chip)	47.0K 63M J RECT.	チップ抵抗			01
R202	**RD350000**	Carbon Resistor (chip)	0 63M J RECT.	チップ抵抗			01
R203	**RD350000**	Carbon Resistor (chip)	0 63M J RECT.	チップ抵抗			01
R204	**RD357470**	Carbon Resistor (chip)	47.0K 63M J RECT.	チップ抵抗			01
-206	**RD357470**	Carbon Resistor (chip)	47.0K 63M J RECT.	チップ抵抗			01
R207	**RD355220**	Carbon Resistor (chip)	220.0 63M J RECT.	チップ抵抗			01
R208	**RF457220**	Carbon Resistor (chip)	22.0K D RECT.	チップ抵抗			
R209	**RF456100**	Carbon Resistor (chip)	1.0K D RECT.	チップ抵抗			
R210	**RD355100**	Carbon Resistor (chip)	100.0 63M J RECT.	チップ抵抗			01
R301	**RD357100**	Carbon Resistor (chip)	10.0K 63M J RECT.	チップ抵抗			01
-303	**RD357100**	Carbon Resistor (chip)	10.0K 63M J RECT.	チップ抵抗			01
R305	**RD357100**	Carbon Resistor (chip)	10.0K 63M J RECT.	チップ抵抗			01
R306	**RD357100**	Carbon Resistor (chip)	10.0K 63M J RECT.	チップ抵抗			01
R307	**RD359100**	Carbon Resistor (chip)	1.0M 63M J RECT.	チップ抵抗			01
R308	**RD355680**	Carbon Resistor (chip)	680.0 63M J RECT.	チップ抵抗			01
R309	**RD359100**	Carbon Resistor (chip)	1.0M 63M J RECT.	チップ抵抗			01
R310	**RD357220**	Carbon Resistor (chip)	22.0K 63M J RECT.	チップ抵抗			01
R311	**RD357100**	Carbon Resistor (chip)	10.0K 63M J RECT.	チップ抵抗			01
R312	**RD354220**	Carbon Resistor (chip)	22.0 63M J RECT.	チップ抵抗			01
R313	**RD354220**	Carbon Resistor (chip)	22.0 63M J RECT.	チップ抵抗			01
R314	**RD354180**	Carbon Resistor (chip)	18.0 63M J RECT.	チップ抵抗			01
R315	**RD354180**	Carbon Resistor (chip)	18.0 63M J RECT.	チップ抵抗			01
R316	**RD356100**	Carbon Resistor (chip)	1.0K 63M J RECT.	チップ抵抗			01
R317	**RD357470**	Carbon Resistor (chip)	47.0K 63M J RECT.	チップ抵抗			01
R401	**RD356470**	Carbon Resistor (chip)	4.7K 63M J RECT.	チップ抵抗			01
R402	**RD356470**	Carbon Resistor (chip)	4.7K 63M J RECT.	チップ抵抗			01
R403	**RD356220**	Carbon Resistor (chip)	2.2K 63M J RECT.	チップ抵抗			01
R404	**RD356470**	Carbon Resistor (chip)	4.7K 63M J RECT.	チップ抵抗			01
R405	**RD356470**	Carbon Resistor (chip)	4.7K 63M J RECT.	チップ抵抗			01
R406	**RD356220**	Carbon Resistor (chip)	2.2K 63M J RECT.	チップ抵抗			01
R407	**RD356220**	Carbon Resistor (chip)	2.2K 63M J RECT.	チップ抵抗			01
R408	**RD355180**	Carbon Resistor (chip)	180.0 63M J RECT.	チップ抵抗			01
R409	**RD355180**	Carbon Resistor (chip)	180.0 63M J RECT.	チップ抵抗			01
R410	**RD356220**	Carbon Resistor (chip)	2.2K 63M J RECT.	チップ抵抗			01
R411	**RD355180**	Carbon Resistor (chip)	180.0 63M J RECT.	チップ抵抗			01
R412	**RD355180**	Carbon Resistor (chip)	180.0 63M J RECT.	チップ抵抗			01
R413	**RD355100**	Carbon Resistor (chip)	100.0 63M J RECT.	チップ抵抗			01
R414	**RD355100**	Carbon Resistor (chip)	100.0 63M J RECT.	チップ抵抗			01
R415	**RD356120**	Carbon Resistor (chip)	1.2K 63M J RECT.	チップ抵抗			01
R416	**RD356150**	Carbon Resistor (chip)	1.5K 63M J RECT.	チップ抵抗			01
R501	**RD356100**	Carbon Resistor (chip)	1.0K 63M J RECT.	チップ抵抗			01
R502	**RD357470**	Carbon Resistor (chip)	47.0K 63M J RECT.	チップ抵抗			01
R601	**RD357470**	Carbon Resistor (chip)	47.0K 63M J RECT.	チップ抵抗			01
R602	**RD357470**	Carbon Resistor (chip)	47.0K 63M J RECT.	チップ抵抗			01

* : New part

RANK : Japan only

	REF NO.	PART NO.	DESCRIPTION		部品名	REMARKS	QTY	RANK
	R603	**RD356100**	Carbon Resistor (chip)	1.0K 63M J RECT.	チップ抵抗			01
	R604	**RD356100**	Carbon Resistor (chip)	1.0K 63M J RECT.	チップ抵抗			01
	R701	**RD355100**	Carbon Resistor (chip)	100.0 63M J RECT.	チップ抵抗			01
	-703	**RD355100**	Carbon Resistor (chip)	100.0 63M J RECT.	チップ抵抗			01
	R704	**RD353470**	Carbon Resistor (chip)	4.7 63M J RECT.	チップ抵抗			01
	R801	**RD357470**	Carbon Resistor (chip)	47.0K 63M J RECT.	チップ抵抗			01
	-803	**RD357470**	Carbon Resistor (chip)	47.0K 63M J RECT.	チップ抵抗			01
	RA201	**RE045100**	Resistor Array	100X4	抵抗アレイ			01
	RA202	**RE045100**	Resistor Array	100X4	抵抗アレイ			01
	RA601	**RE048100**	Resistor Array	100KX4	抵抗アレイ			01
	RA602	**RE048100**	Resistor Array	100KX4	抵抗アレイ			01
	RA603	**RE046100**	Resistor Array	1KX4	抵抗アレイ			01
	RA604	**RE046100**	Resistor Array	1KX4	抵抗アレイ			01
	RA701	**RE045100**	Resistor Array	100X4	抵抗アレイ			01
	-703	**RE045100**	Resistor Array	100X4	抵抗アレイ			01
	RA704	**RE047220**	Resistor Array	22KX4	抵抗アレイ			01
	-706	**RE047220**	Resistor Array	22KX4	抵抗アレイ			01
	RA707	**RE046100**	Resistor Array	1KX4	抵抗アレイ			01
	-709	**RE046100**	Resistor Array	1KX4	抵抗アレイ			01
	TA601	**WB123200**	Transistor Array	IMB10A T110	トランジスタアレイ			05
	-604	**WB123200**	Transistor Array	IMB10A T110	トランジスタアレイ			05
	TR601	**VY677600**	Digital Transistor	DTC123JKA TP	デジタルトランジスタ			01
	X101	**WE194400**	Quartz Crystal Unit	16.9344M HC-49S-SM	水晶振動子			01
	X301	**WG138100**	Quartz Crystal Unit	6.0000M HC-49S-SMD	水晶振動子			
		WF212800	Circuit Board	GHL88H	GHL88シートH	(WF46250)(X6246D0)		12
	CN1	**WA619500**	Wire Trap	52151 17P SE	ワイヤートラップ			01
	D1	**VB941200**	Diode	1SS133,1SS176 TE	ダイオード			01
	-48	**VB941200**	Diode	1SS133,1SS176 TE	ダイオード			01
		WF212500	Circuit Board	GHL88L	GHL88シートL	(WF46230)(X6244D0)		13
	CN1	**WA619500**	Wire Trap	52151 17P SE	ワイヤートラップ			01
	D1	**VB941200**	Diode	1SS133,1SS176 TE	ダイオード			01
	D5	**VB941200**	Diode	1SS133,1SS176 TE	ダイオード			01
	-60	**VB941200**	Diode	1SS133,1SS176 TE	ダイオード			01
		WF212600	Circuit Board	GHL88M	GHL88シートM	(WF46240)(X6245G0)		13
	CN1	**WA619500**	Wire Trap	52151 17P SE	ワイヤートラップ			01
	CN2	**WG011900**	FFC Connector	52807SHIRI-ZU 27P	FFCコネクタ			
	CN3	**WA619500**	Wire Trap	52151 17P SE	ワイヤートラップ			01
	D1	**VB941200**	Diode	1SS133,1SS176 TE	ダイオード			01
	-72	**VB941200**	Diode	1SS133,1SS176 TE	ダイオード			01
*		**WG255000**	Circuit Board	PNL	PNLシート	(WG25520)(X7137B0)		
*		**WG255100**	Circuit Board	PNR	PNRシート	(WG25520)(X7137B0)		
	CN01	**V4928200**	FFC Connector	52806-1210 12P TE	FFCコネクタ			01
*	CN02	**WG033600**	FFC Connector	52806 15P TE	FFCコネクタ			
	CN03	**VK024700**	Wire Trap	52147 3P TE	ワイヤートラップ			01
	D01	**VB941200**	Diode	1SS133,1SS176 TE	ダイオード			01
	D01	**VV437800**	Diode	1N4148(DO-34)	ダイオード			01
	D02	**VB941200**	Diode	1SS133,1SS176 TE	ダイオード			01
	D02	**VV437800**	Diode	1N4148(DO-34)	ダイオード			01
	D03	**VB941200**	Diode	1SS133,1SS176 TE	ダイオード			01
	D03	**VV437800**	Diode	1N4148(DO-34)	ダイオード			01
	D04	**VB941200**	Diode	1SS133,1SS176 TE	ダイオード			01
	D04	**VV437800**	Diode	1N4148(DO-34)	ダイオード			01
	D05	**VB941200**	Diode	1SS133,1SS176 TE	ダイオード			01
	D05	**VV437800**	Diode	1N4148(DO-34)	ダイオード			01
	D06	**VB941200**	Diode	1SS133,1SS176 TE	ダイオード			01
	D06	**VV437800**	Diode	1N4148(DO-34)	ダイオード			01
	D07	**VB941200**	Diode	1SS133,1SS176 TE	ダイオード			01
	D07	**VV437800**	Diode	1N4148(DO-34)	ダイオード			01
	D08	**VB941200**	Diode	1SS133,1SS176 TE	ダイオード			01
	D08	**VV437800**	Diode	1N4148(DO-34)	ダイオード			01
*	LD01	**WG913000**	LED	BL-S4537 RED	LED	P.A.T.ON/OFF		
*	LD02	**WG913200**	LED	BL-BEG201	2色LED	START/STOP		
*	LD03	**WG913000**	LED	BL-S4537 RED	LED	SONG		
*	LD04	**WG913000**	LED	BL-S4537 RED	LED	EASY SONG ARRANGER		
*	LD05	**WG913000**	LED	BL-S4537 RED	LED	STYLE		
*	LD06	**WG913000**	LED	BL-S4537 RED	LED	VOICE		

* : New parts

RANK : Japan only

	REF NO.	PART NO.	DESCRIPTION		部品名	REMARKS	QTY	RANK
	R01	**V2548200**	Carbon Resistor	150.0 1/6J 26TP	カーボン抵抗			
*	R02	**V2547300**	Carbon Resistor	27.0 1/6J 26TP	カーボン抵抗			
*	R03	**V2547100**	Carbon Resistor	18.0 1/6J 26TP	カーボン抵抗			
	R05	**V2548200**	Carbon Resistor	150.0 1/6J 26TP	カーボン抵抗			
	-08	**V2548200**	Carbon Resistor	150.0 1/6J 26TP	カーボン抵抗			
		X0159A00	Speaker	3.0cm	スピーカ	TWEETER	2	01
*		**X7430A00**	Speaker	12.0cm 4 ohm 10W	スピーカ	WOOFER	2	
*		**WG299100**	LCD	PT	液晶ユニット			
		NB037130	Switch Assembly		スイッチアセンブリー	FOOT PEDAL		05

* : New part

RANK : Japan only

<Page1>

■ DGX-620/YPG-625 OVERALL CIRCUIT DIAGRAM (AM, DJACK, DM, MVR, PB, PSW, TW)

DM

Keyboard Scanning

to GHL88M-CN2 <Page2 H-4>

CPU IC701 LE27B592AGBB-A45

SWL01(T)

CS0	PROGRAM+WAVE
CS1	------
CS2	LCDC
CS3	FALSH ROM
CS4	DRAM
CS5	USBC

SYSTEM RESET

Reset time:50ms
Detect Voltage:3.5V

CPU IC101 MN2871J-VTZ

AND

LCD CONTROLLER IC201 S1D13700F01A

DC/DC CONVERTER

BACK LIGHT

LCD

LCD Assembly

USB HIGH SIDE SWITCH

USB CONTROLLER IC301 ISP1161A1

DJACK

SUSTAIN

TO HOST

USB

TO DEVICE

CONTRAST

28CC1-2001000273 ⚠3

to PNL-CN01 <Page2 F-6>

to PNR-CN02 <Page2 F-8>

ADC

DAC

OP AMP

REGULATOR +2.5V

REGULATOR +3.3V

Not Installed

28CC1-2001000274 ⚠2

128M P2ROM

8M FLASH ROM (DATA)

16M DRAM

OR

Not Installed

MASTER VOLUME

MVR

28CC1-2001000273 ⚠3

AM

POWER AMP

PHONES/OUTPUT

TW -L

TW -R

28CC1-2001000273

TWEETERS 3cm

WOOFERS 12cm 4

PITCH BEND

PB

28CC1-2001000273 ⚠3

POWER SUPPLY

REGULATOR +5V

REGULATOR +5V

STANDBY/ON

PSW

28CC1-2001000273 ⚠3

DC-IN

PA-5D (AC Adaptor)

28CC1-2001000273 ⚠3

- **RH5RZ25CA-T1-F** (X3679A00)
  REGULATOR +2.5V
  DM:IC901
  1. GND 2. INPUT 3. OUTPUT
- **BA33BC0FP** (X5889A00)
  REGULATOR +3.3V
  DM: IC902
  1. INPUT 2. GND 3. OUTPUT
- **BA50BC0T** (X5887A00)
  REGULATOR +5V
  AM: IC101,102
  1. INPUT 2. OUTPUT 3. GND
- **1SS372 TE85L** (V9424900)
- **MA3Z79300L** (WH107100)
  DIODE ARRAY
  DM:DA301-DA304
  1 : ANODE 2 : CATHODE

*(セ) *: Ceramic Capacitor
*(マ) *: Mylar Capacitor
*(半セ) : Monolithic Ceramic Capacitor
金被 : Metal Film Resistor

■ WARNING
Components having special characteristics are marked ⚠ and must be replaced with parts having specification equal to those originally installed.

Note: See Parts list for details of circuit board component parts.

DGX-620/YPG-625

■ DGX-620/YPG-625 OVERALL CIRCUIT DIAGRAM (ENC, GHL88H, GHL88L, GHL88M, PNL, PNR)

GHL88L

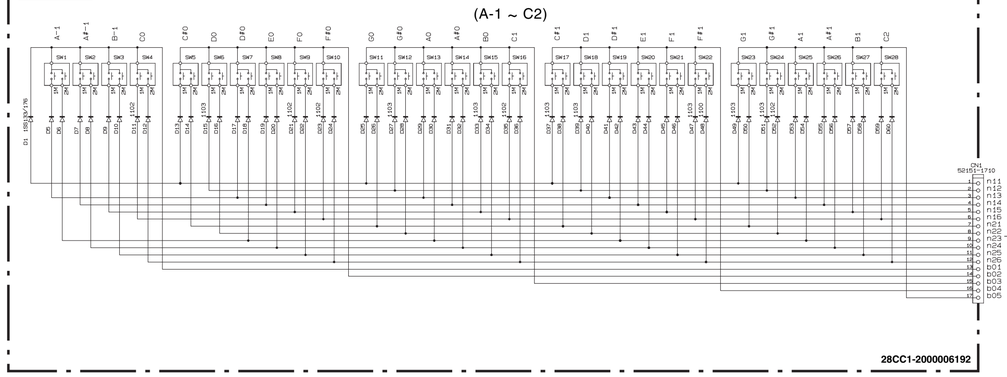

GHL88M

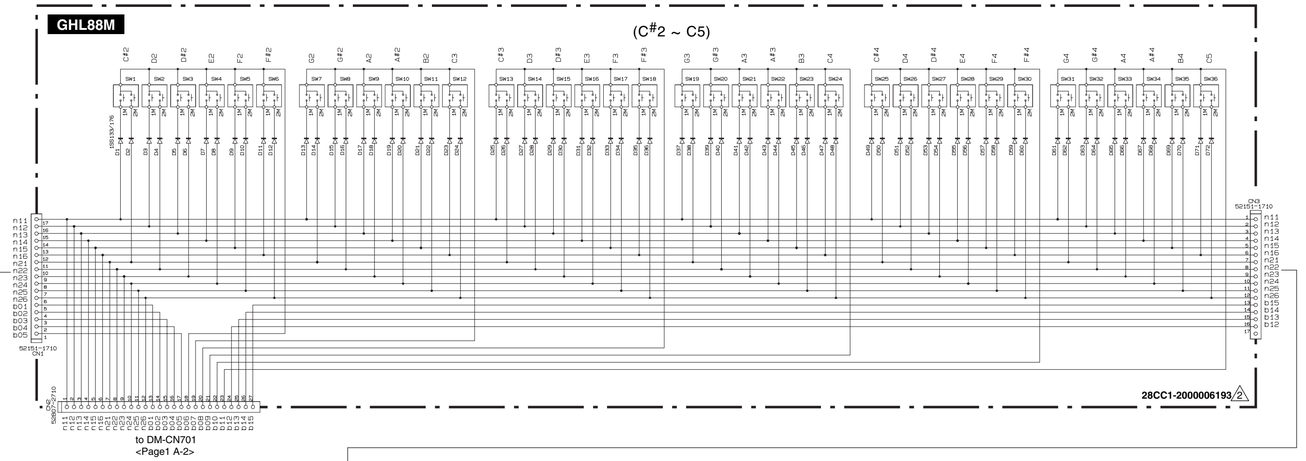

GHL88H

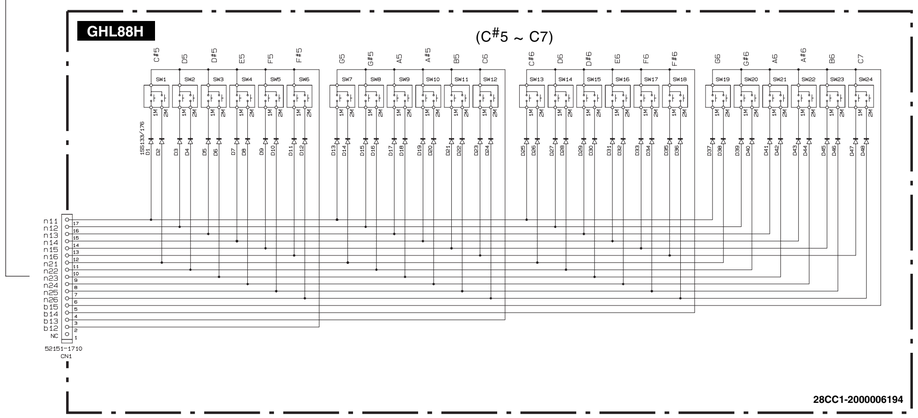

PNL

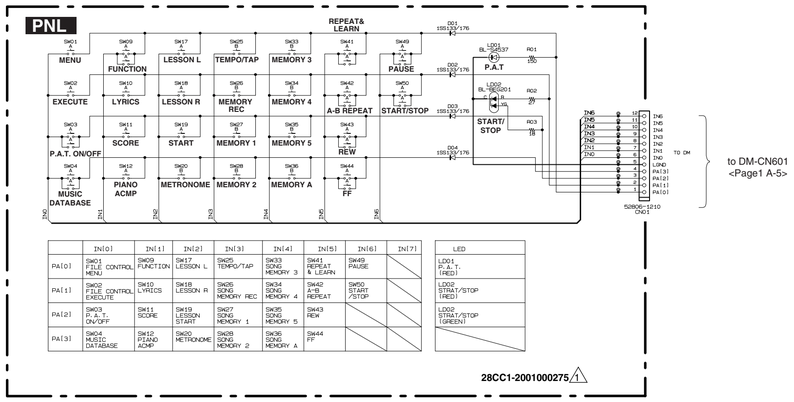

	IN[0]	IN[1]	IN[2]	IN[3]	IN[4]	IN[5]	IN[6]	IN[7]
PA[0]	SW01 FILE CONTROL MENU	SW09 FUNCTION	SW17 LESSON L	SW25 TEMPO/TAP	SW33 SONG MEMORY 3	SW41 REPEAT & LEARN	SW49 PAUSE	
PA[1]	SW02 FILE CONTROL EXECUTE	SW10 LYRICS	SW18 LESSON R	SW26 SONG MEMORY REC	SW34 SONG MEMORY 4	SW42 A-B REPEAT	SW50 START /STOP	
PA[2]	SW03 P.A.T. ON/OFF	SW11 SCORE	SW19 LESSON START	SW27 SONG MEMORY 1	SW35 SONG MEMORY 5	SW43 REW		
PA[3]	SW04 MUSIC DATABASE	SW12 PIANO ACMP	SW20 METRONOME	SW28 SONG MEMORY 2	SW36 SONG MEMORY A	SW44 FF		

LED
LD01 P.A.T. (RED)
LD02 START/STOP (RED)
LD02 START/STOP (GREEN)

PNR

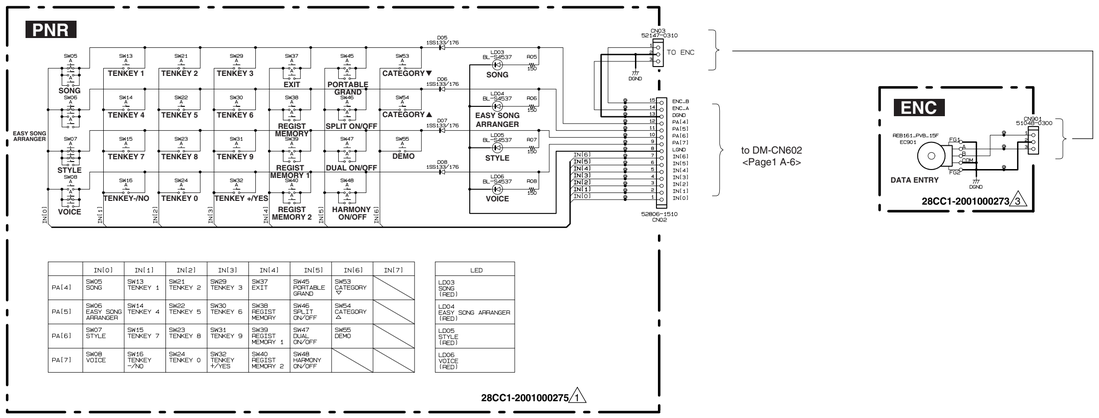

	IN[0]	IN[1]	IN[2]	IN[3]	IN[4]	IN[5]	IN[6]	IN[7]
PA[4]	SW05 SONG	SW13 TENKEY 1	SW21 TENKEY 2	SW29 TENKEY 3	SW37 EXIT	SW45 PORTABLE GRAND	SW53 CATEGORY ▼	
PA[5]	SW06 EASY SONG ARRANGER	SW14 TENKEY 4	SW22 TENKEY 5	SW30 TENKEY 6	SW38 REGIST MEMORY	SW46 SPLIT ON/OFF	SW54 CATEGORY ▲	
PA[6]	SW07 STYLE	SW15 TENKEY 7	SW23 TENKEY 8	SW31 TENKEY 9	SW39 REGIST MEMORY 1	SW47 DUAL ON/OFF	SW55 DEMO	
PA[7]	SW08 VOICE	SW16 TENKEY -/NO	SW24 TENKEY 0	SW32 TENKEY +/YES	SW40 REGIST MEMORY 2	SW48 HARMONY ON/OFF		

LED
LD03 SONG (RED)
LD04 EASY SONG ARRANGER (RED)
LD05 STYLE (RED)
LD06 VOICE (RED)

ENC

Note: See Parts list for details of circuit board component parts.