DIGITAL KEYBOARD *PortableGrand*

DGX-530/YPG-535

SERVICE MANUAL



DGX-530



YPG-535

■ CONTENTS

SPECIFICATIONS 3
PANEL LAYOUT 4
CIRCUIT BOARD LAYOUT & WIRING 6
DISASSEMBLY PROCEDURE 8
LSI PIN DESCRIPTION 13
IC BLOCK DIAGRAM 16
CIRCUIT BOARDS 17
TEST PROGRAM 25
INITIALIZATION 29
USER DATA BACKUP 30
MIDI IMPLEMENTATION CHART 34
MIDI DATA FORMAT 35
PARTS LIST
BLOCK DIAGRAM
OVERALL CIRCUIT DIAGRAM

PK 001804

YAMAHA
HAMAMATSU, JAPAN

Copyright (c) Yamaha Corporation. All rights reserved. PDF KM '08.04

IMPORTANT NOTICE

This manual has been provided for the use of authorized Yamaha Retailers and their service personnel. It has been assumed that basic service procedures inherent to the industry, and more specifically Yamaha Products, are already known and understood by the users, and have therefore not been restated.

WARNING : Failure to follow appropriate service and safety procedures when servicing this product may result in personal injury, destruction of expensive components and failure of the product to perform as specified. For these reasons, we advise all Yamaha product owners that all service required should be performed by an authorized Yamaha Retailer or the appointed service representative.

IMPORTANT : This presentation or sale of this manual to any individual or firm does not constitute authorization certification, recognition of any applicable technical capabilities, or establish a principal-agent relationship of any form.

The data provided is belived to be accurate and applicable to the unit(s) indicated on the cover. The research engineering, and service departments of Yamaha are continually striving to improve Yamaha products. Modifications are, therefore, inevitable and changes in specification are subject to change without notice or obligation to retrofit. Should any discrepancy appear to exist, please contact the distributor's Service Division.

WARNING : Static discharges can destroy expensive components. Discharge any static electricity your body may have accumulated by grounding yourself to the ground bus in the unit (heavy gauge black wires connect to this bus.)

IMPORTANT : Turn the unit OFF during disassembly and parts replacement. Recheck all work before you apply power to the unit.

WARNING: This product contains chemicals known to the State of California to cause cancer, or birth defects or other reproductive harm.

DO NOT PLACE SOLDER, ELECTRICAL/ELECTRONIC OR PLASTIC COMPONENTS IN YOUR MOUTH FOR ANY REASON WHAT SO EVER!

Avoid prolonged, unprotected contact between solder and your skin! When soldering, do not inhale solder fumes or expose eyes to solder/flux vapor!

If you come in contact with solder or components located inside the enclosure of this product, wash your hands before handling food.

WARNING

Components having special characteristics are marked ⚠ and must be replaced with parts having specification equal to those originally installed.

SAVING DATA

Saving and backing up your data



Be sure to perform it

The panel settings and some other types of data are not retained in memory when you turn off the power to the instrument. Save data you want to keep to the Registration Memory.

Saved data may be lost due to malfunction or incorrect operation. Save important data to an external device such as a computer.

Backing up the USB storage device/external media



Be sure to perform it

To protect against data loss through media damage, we recommend that you save your important data onto two USB storage devices/external media.

SPECIFICATIONS

Keyboards
- 88-key box type (A-1–C7), with Touch Response.

Display
- 320 x 240 dots LCD display (backlit)

Setup
- STANDBY/ON
- MASTER VOLUME: MIN–MAX
- LCD CONTRAST

Panel Controls
- SONG, VOICE, STYLE, EASY SONG ARRANGER, P.A.T. ON/OFF, LESSON L, LESSON R, LESSON START, METRONOME ON/OFF, PORTABLE GRAND, DEMO, FUNCTION, MUSIC DATABASE, HARMONY ON/OFF, DUAL ON/OFF, SPLIT ON/OFF, TEMPO/TAP, [0]–[9], [+], [-], CATEGORY, Dial, REPEAT & LEARN (ACMP ON/OFF), A-B REPEAT (INTRO/ENDING/rit.), PAUSE (SYNC START), START/STOP, REW (MAIN/AUTO FILL), FF (SYNC STOP), REGIST MEMORY ([MEMORY/BANK], [1], [2]), SONG MEMORY (REC, [1]–[5], [A]), File Control [MENU], File Control [EXECUTE], [EXIT], [LYRICS], [SCORE], [CHORD FINGERING]

Realtime Control
- Pitch Bend Wheel

Voice
- 127 panel voices + 12 drum/SFX kits + 361 XGlite voices
- Polyphony: 32
- DUAL
- SPLIT

Style
- 160 Preset Styles + External files
- Style Control: ACMP ON/OFF, SYNC STOP, SYNC START, START/STOP, INTRO/ENDING/rit., MAIN/AUTO FILL
- Fingering: Multi Finger, Full Keyboard
- Style Volume

Music Database
- 300 + External files

Education Feature
- Dictionary
- Lesson 1–3, Repeat & Learn

Registration Memory
- 8 banks x 2 types

Function
- VOLUME: Style Volume, Song Volume
- OVERALL: Tuning, Transpose, Split Point, Touch Sensitivity, Pitch Bend Range, Chord Fingering
- MAIN VOICE: Volume, Octave, Pan, Reverb Level, Chorus Level
- DUAL VOICE: Volume, Octave, Pan, Reverb Level, Chorus Level
- SPLIT VOICE: Volume, Octave, Pan, Reverb Level, Chorus Level
- EFFECT: Reverb Type, Chorus Type, Master EQ Type, Sustain
- HARMONY: Harmony Type, Harmony Volume
- Performance assistant technology: Performance assistant technology Type
- PC: PC Mode
- MIDI: Local On/Off, External Clock, Initial Send, Keyboard Out, Style Out, Song Out
- METRONOME: Time Signature Numerator, Time Signature Denominator, Metronome Volume
- SCORE: Quantize
- LESSON: Lesson Track (R), Lesson Track (L), Grade
- UTILITY: Demo Cancel, Language

Effects
- Reverb: 9 types
- Chorus: 4 types
- Harmony: 26 types

Song
- 30 Preset Songs + 5 User Songs + Accessory CD-ROM Songs (70)
- Song Clear, Track Clear
- Song Volume
- Song Control: REPEAT & LEARN, A-B REPEAT, PAUSE, REW, FF, START/STOP

Performance assistant technology
- Chord, Chord/Free, Melody, Chord/Melody

Recording
- Song
  User Song: 5 Songs
  Recording Tracks: 1, 2, 3, 4, 5, STYLE

MIDI
- Local On/Off • Initial Send • External Clock
- Keyboard Out • Style Out • Song Out

Auxiliary jacks
- PHONES/OUTPUT, DC IN 12V, USB TO HOST, USB TO DEVICE, SUSTAIN

Amplifier
- 6W + 6W

Speakers
- 12cm x 2 + 3cm x 2

Power Consumption
- 22W

Power Supply
- Adaptor: PA-5D or an equivalent recommended by Yamaha

Dimensions (W x D x H)
- 1,340 x 422 x 145 mm (52-3/4" x 16-5/8" x 5-3/4")
  with keyboard stand:
  1,354 x 485 x 775 mm (53-1/3" x 19-1/8" x 30-1/2")

Weight
- 11.0kg (24 lbs. 4 oz.)
  with keyboard stand: 17.0kg (37 lbs. 8 oz.)

Supplied Accessories
- Music Rest • Accessory CD-ROM
- Keyboard Stand • Owner's Manual • Footswitch FC5
- AC Power adaptor (PA-5D or an equivalent recommended by Yamaha)

* May not be included depending on your particular area.

Optional Accessories
- Headphones: HPE-150

PANEL LAYOUT

• Front Panel

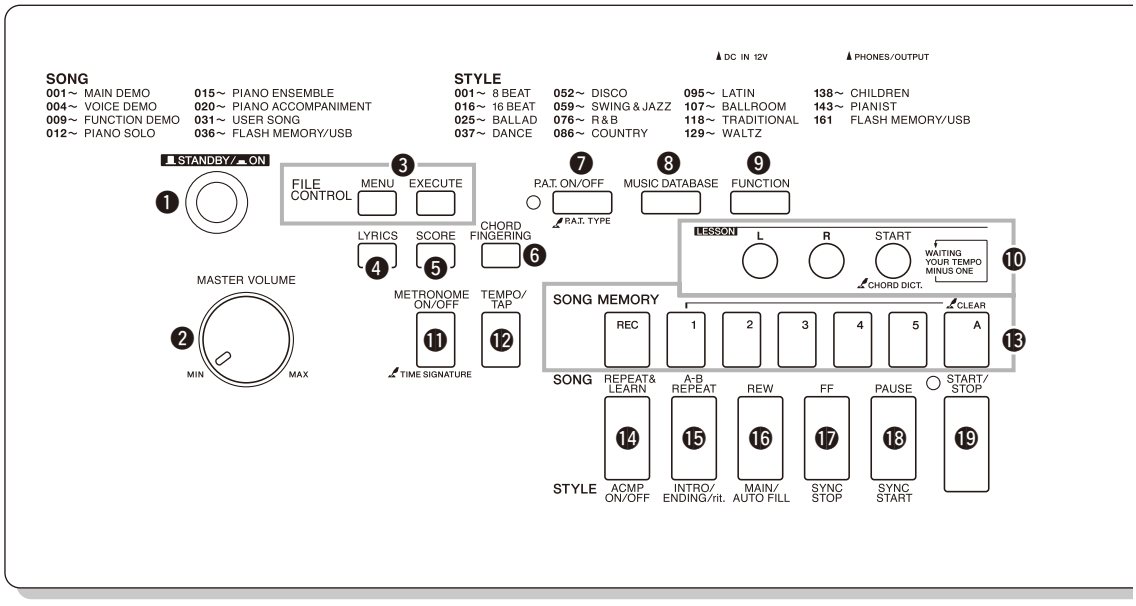

❶ [STANDBY/ON] switch
❷ [MASTER VOLUME] control
❸ FILE CONTROL [MENU], [EXECUTE] buttons
❹ [LYRICS] button
❺ [SCORE] button
❻ [CHORD FINGERING] button
❼ [P.A.T. ON/OFF] button
❽ [MUSIC DATABASE] button
❾ [FUNCTION] button
❿ LESSON [L], [R], [START] buttons
⓫ [METRONOME ON/OFF] button
⓬ [TEMPO/TAP] button
⓭ SONG MEMORY
[REC], [1]–[5], [A] buttons
⓮ [REPEAT & LEARN]/[ACMP ON/OFF] button
⓯ [A-B REPEAT]/[INTRO/ENDING/rit.] button
⓰ [REW]/[MAIN/AUTO FILL] button
⓱ [FF]/[SYNC STOP] button
⓲ [PAUSE]/[SYNC START] button
⓳ [START/STOP] button
⓴ [SONG] button
㉑ [EASY SONG ARRANGER] button
㉒ [STYLE] button
㉓ [VOICE] button
㉔ Dial
㉕ CATEGORY [▲▲] and [▼▼] buttons
㉖ Number buttons [0]–[9], [+] and [-] buttons
㉗ [DEMO] button
㉘ [EXIT] button
㉙ REGIST MEMORY
[MEMORY/BANK], [1], [2] buttons
㉚ [PORTABLE GRAND] button
㉛ [SPLIT ON/OFF] button
㉜ [DUAL ON/OFF] button
㉝ [HARMONY ON/OFF] button
㉞ [PITCH BEND] wheel
㉟ Drum Kit

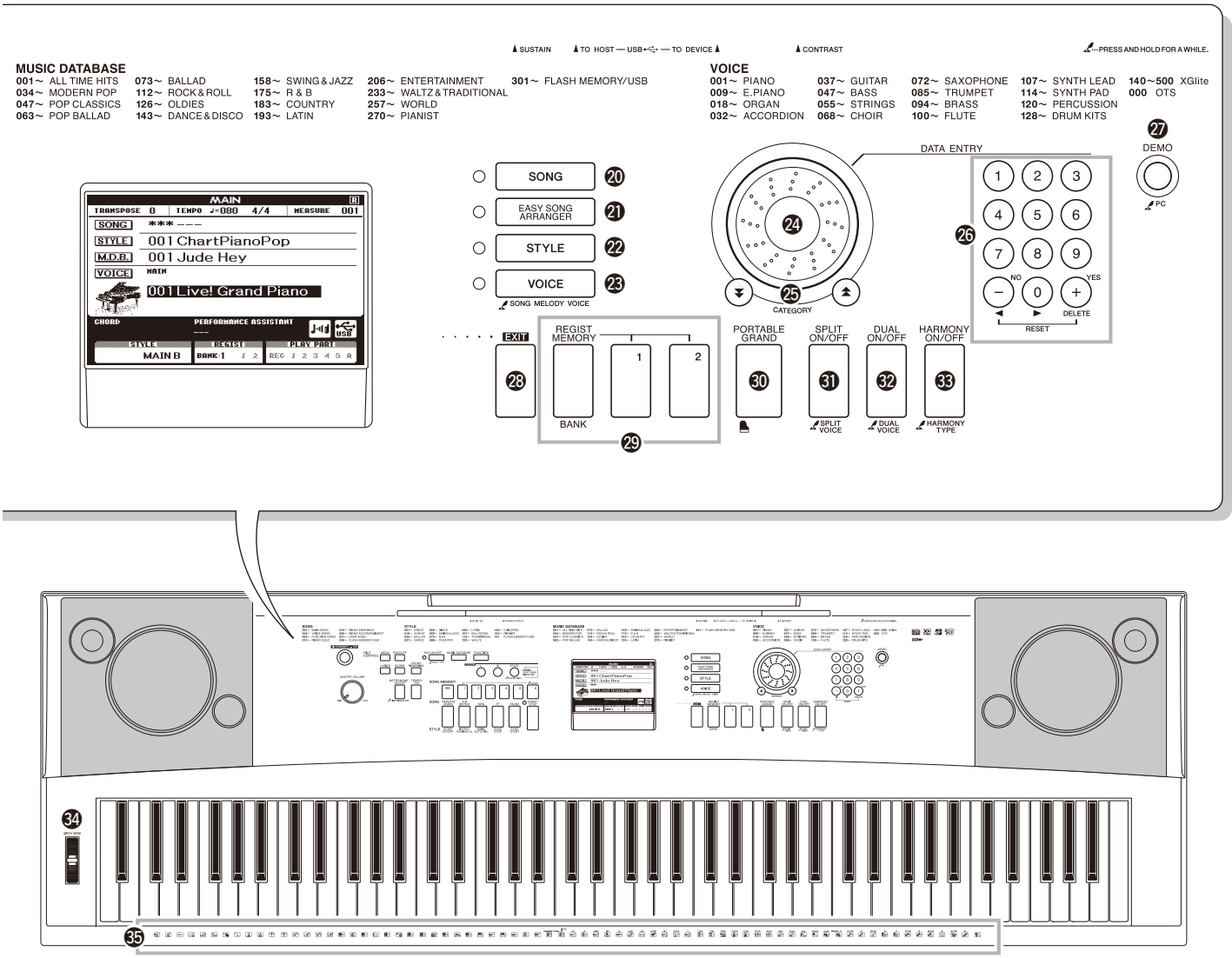

• Rear Panel

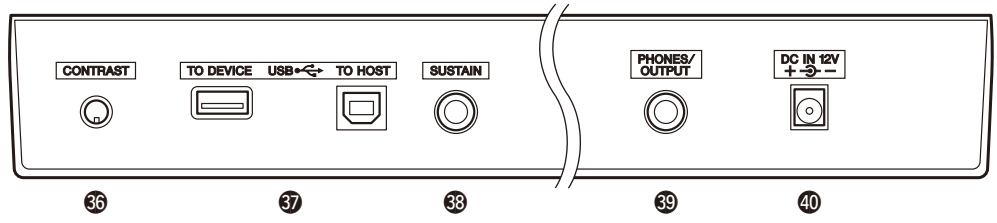

㊱ CONTRAST knob
㊲ USB TO DEVICE terminal
USB TO HOST terminal
㊳ SUSTAIN jack
㊴ PHONES/OUTPUT jack
㊵ DC IN 12V jack

■ CIRCUIT BOARD LAYOUT & WIRING

• **Upper case**

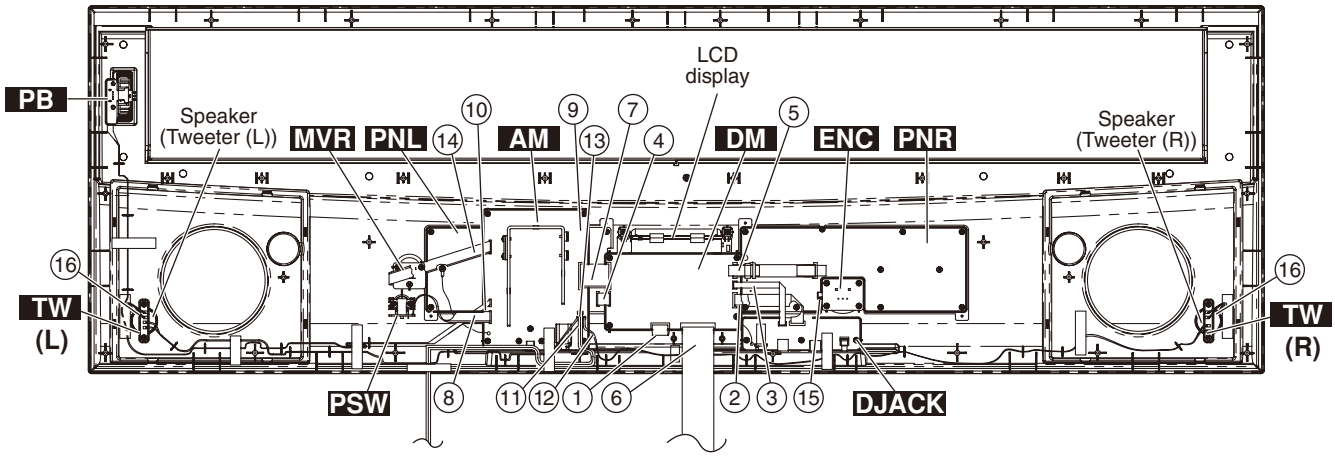

• **Lower case**

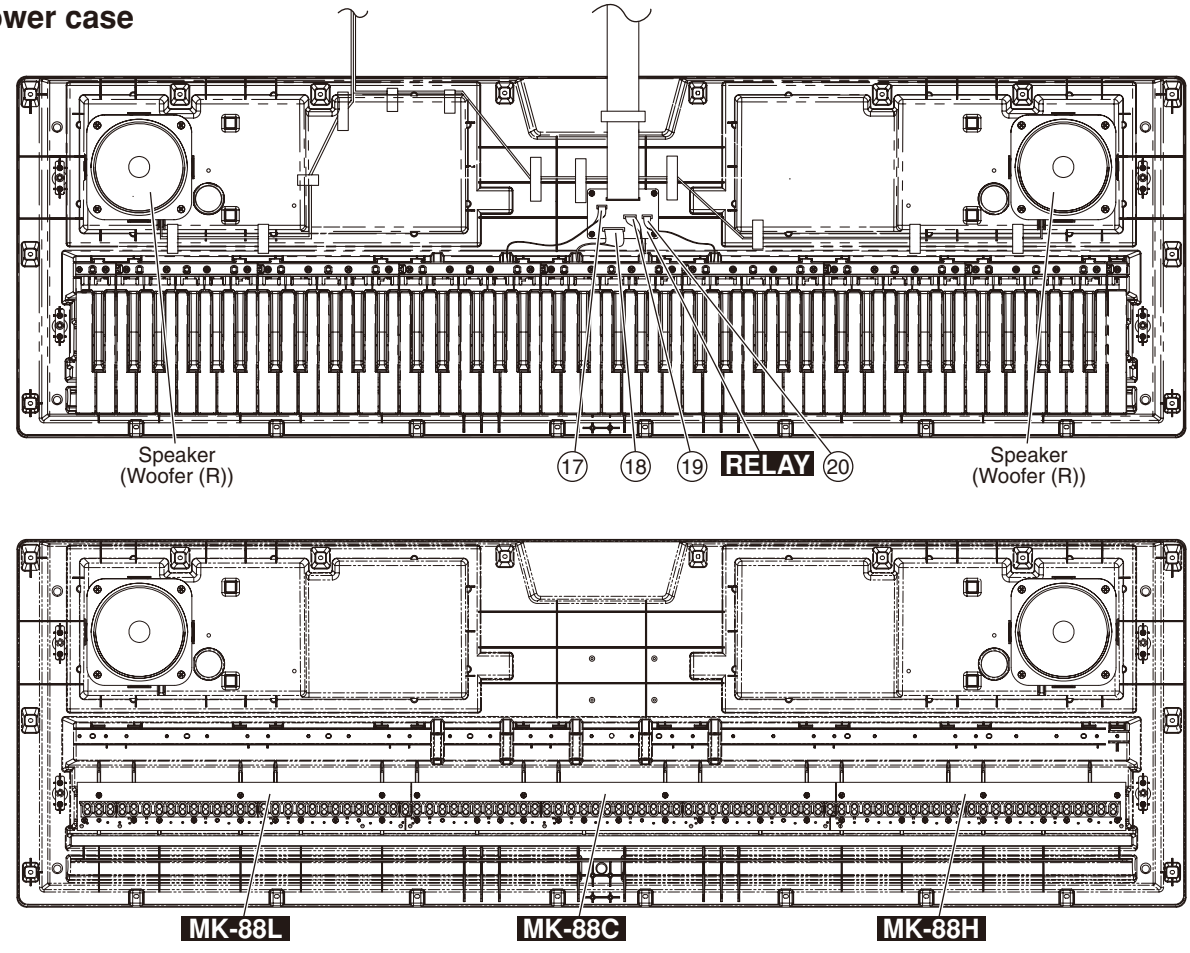

No.	Unit Name	Location	Part No.	Connector assembly	Destination						Remarks
①	LCD Unit	–	–	Flexible flat cable	DM-CN201	*1	*4	LCD	*3	*4	14P
②	Overall Assembly	245	WN827900	Flexible flat cable	DM-CN301	*1	*4	DJACK-CN301	*1	*4	12P L=120
③	Overall Assembly	240	WN827800	Flexible flat cable	DM-CN302	*1	*4	DJACK-CN302	*1	*4	5P L=120
④	Overall Assembly	230	WG317600	Flexible flat cable	DM-CN601	*1	*4	PNL-CN01	*1	*4	12P
⑤	Overall Assembly	250	WH413600	Flexible flat cable	DM-CN602	*1	*4	PNR-CN02	*1	*4	15P
⑥	Overall Assembly	270	WG318300	Flexible flat cable	DM-CN701	*1	*4	RELAY-CN01	*1	*4	27P
⑦	Overall Assembly	260	WG317900	Flexible flat cable	DM-CN901	*1	*4	AM-CN104	*1	*4	19P
⑧	PSW Circuit Board	WH501	(WG45930)	PSW	AM-CN101	*1	*5	PSW-CN501	*2	*5	4P L=120
⑨	Overall Assembly	290	WB092100	BL	AM-CN102	*1	*5	LCD	*3	*6	2P
⑩	PB Circuit Board	WH401	(WG46060)	PB	AM-CN103	*1	*5	PB-CN401	*2	*5	3P L=825
⑪	AM Circuit Board	WH201	(WG46040)	TWL	AM-CN201	*2	*5	TW(L)	*3	*6	2P
⑫	AM Circuit Board	WH202	(WG46050)	TWR	AM-CN202	*2	*5	TW(R)	*3	*6	2P
⑬	Lower Case Assembly	100	WG458700	SP1	AM-CN203	*1	*8	Speaker Lch	*3	*9	4P
								Speaker Rch	*3	*10	
⑭	MVR Circuit Board	WH601	(WG46070)	MVR	AM-CN204	*1	*5	MVR-CN601	*2	*5	5P L=120
⑮	ENC Circuit Board	WH901	(WB09270)	ENC	PNR-CN03	*1	*5	ENC-CN901	*2	*5	3P L=60
⑯	–	–	–	–	Speaker	*11	–	TW	*3	*10	2P
⑰	MK-88L Circuit Board	220	(WH62650)	88L	RELAY-CN03	*1	*5	88L	*1	*5	5P
⑱	MK-88C Circuit Board	240	(WH62670)	88C-N	RELAY-CN02	*1	*5	88C	*1	*5	12P
⑲	MK-88C Circuit Board	230	(WH62660)	88C-B	RELAY-CN04	*1	*5	88C	*1	*5	6P
⑳	MK-88H Circuit Board	250	(WH62640)	88H	RELAY-CN05	*1	*5	88H	*1	*5	4P

* The parts with "( )" in "**Part No.**" are not available as spare parts.
*1: Installation
*2: Dip soldering
*3: Manual soldering
*4: The conductor of a cable and the point of contact of a connector are untited.
*5: Edge mark is adjusted to Pin 1 (△) side.
*6: Edge mark is connected to + side.
*7: Edge mark is connected to + terminal.
*8: White wire is adjusted to Pin 1 (△) side.
*9: White wire is connected to + terminal.
*10: Red wire is connected to + terminal.
*11: Connected

Caution: Be sure to attach the removed filament tape just as it was before removal.

DISASSEMBLY PROCEDURE

Caution: **1) Flat cable's contacts are visible from the back.**
Pay attention not to insert and install the cable to the connector inversely. (Fig.1)
2) Be sure to attach the removed filament tape just as it was before removal.

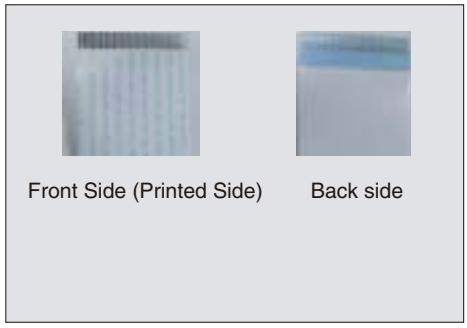

(Fig.1)

1. Lower Case Assembly (Time required: About 9 minutes)

1-1 Remove the twenty (20) screws marked [470]. The bottom boards L and R can then be removed. (Fig.2)

1-2 Remove the twenty four (24) screws marked [460] and the eight (8) screws marked [450]. The lower case assembly can then be removed. (Fig. 3)

<Bottom View>

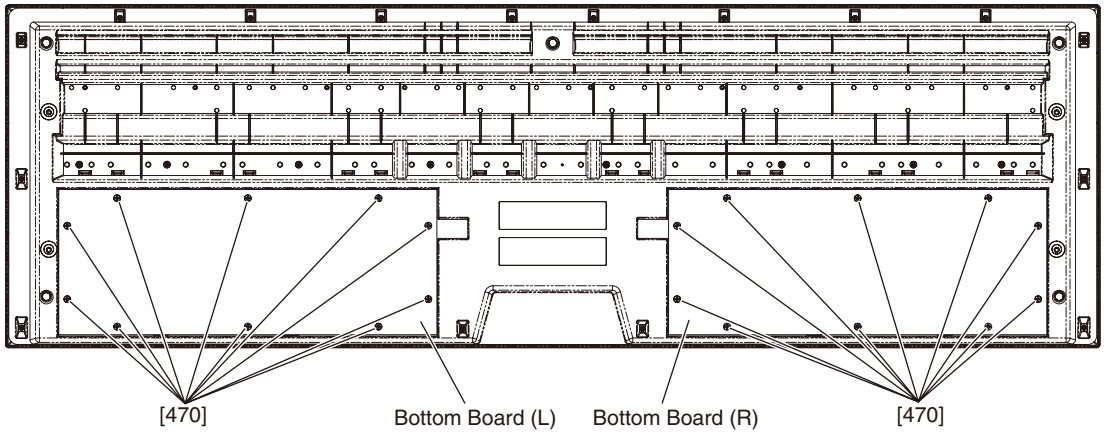

(Fig.2)

[470]: Bind Head Tapping Screw-B 4.0X16 MFZN2W3 (WF154100)

<Bottom View>

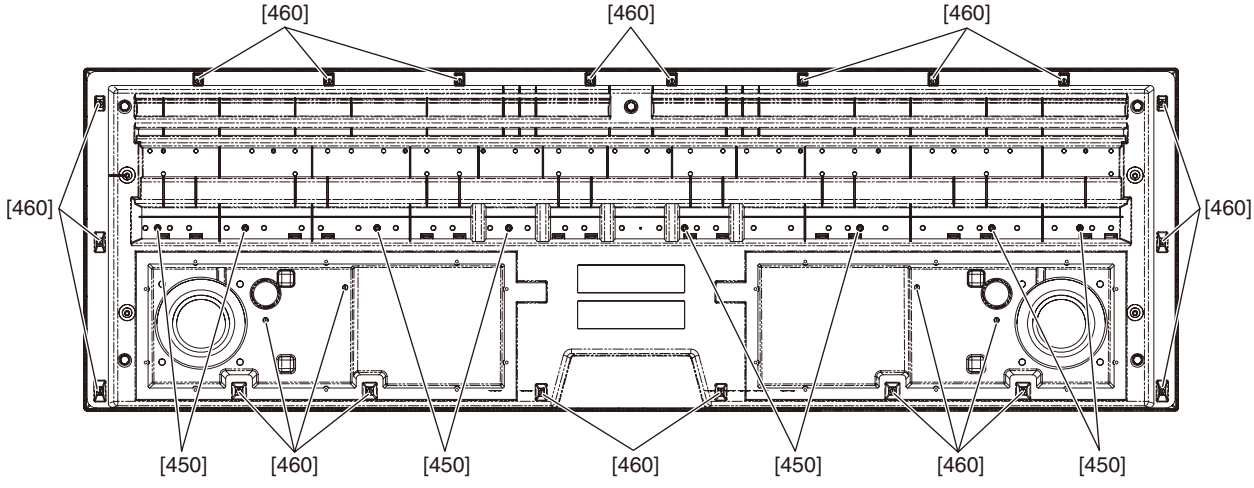

(Fig.3)

[450]: Bind Head Tapping Screw-B 3.0X30 MFZN2W3 (WF491000)
[460]: Bind Head Tapping Screw-B 3.0X12 MFZN2W3 (WE987400)

2. DM Circuit Board (Time required: About 10 minutes)

2-1 Remove the lower case assembly. (See procedure 1.)

2-2 Remove the four (4) screws marked [440A]. The DM circuit board can then be removed. (Fig.4)

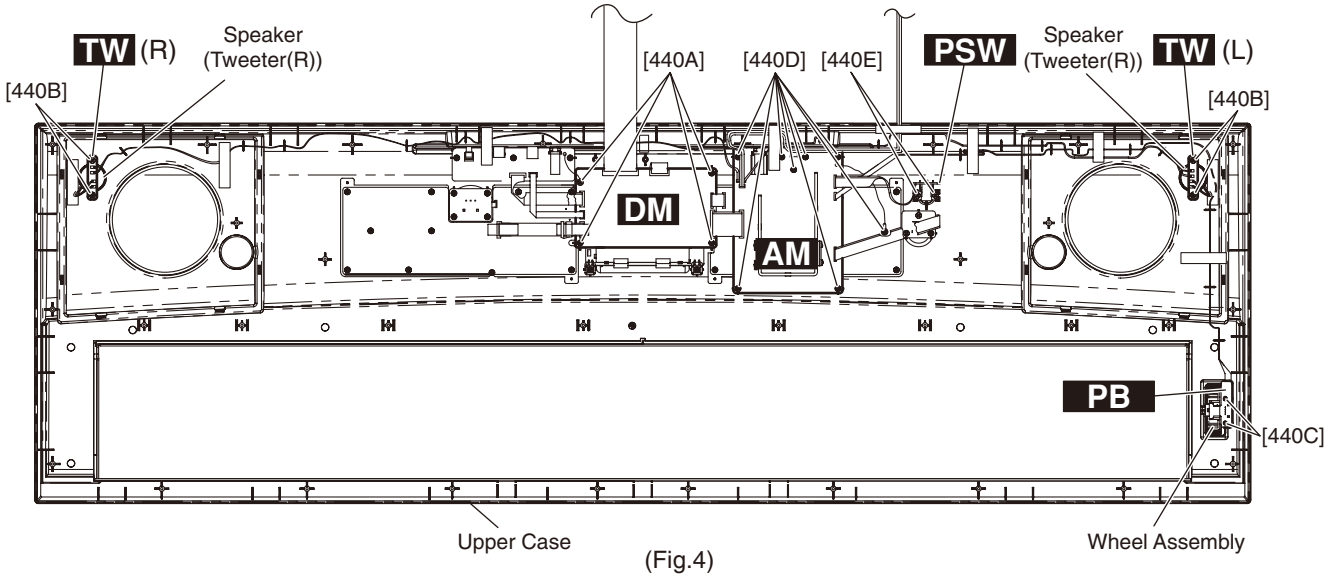

(Fig.4)

[440]: Bind Head Tapping Screw-B 3.0X8 MFZN2W3 (WE774300)

3. TW Circuit Board, Speaker (Tweeter) (Time required: About 9 minutes)

3-1 Remove the lower case assembly. (See procedure 1.)

3-2 Remove the two (2) screws marked [440B]. The TW circuit board and speaker (tweeter) can then be removed. (Fig.4)

* *The left and right speakers (tweeters) can be removed in the same way.*

4. PB Circuit Board, Wheel Assembly (Time required: About 9 minutes)

4-1 Remove the lower case assembly. (See procedure 1.)

4-2 Remove the two (2) screws marked [440C]. The PB circuit board and the wheel assembly can then be removed. (Fig.4)

* *Make sure to mount the wheel assembly on the volume shaft of the PB circuit board by firmly inserting it into the shaft.*

5. AM Circuit Board (Time required: About 10 minutes)

5-1 Remove the lower case assembly. (See procedure 1.)

5-2 Remove the eight (8) screws marked [440D]. The AM circuit board can then be removed. (Fig.4)

6. PSW Circuit Board (Time required: About 9 minutes)

6-1 Remove the lower case assembly. (See procedure 1.)

6-2 Remove the two (2) screws marked [440E]. The PSW circuit board can then be removed. (Fig.4)

7. DJACK Circuit Board (Time required: About 10 minutes)

7-1 Remove the lower case assembly. (See procedure 1.)

7-2 Remove the three (3) screws marked [440G]. The DJACK circuit board can then be removed. (Fig.5)

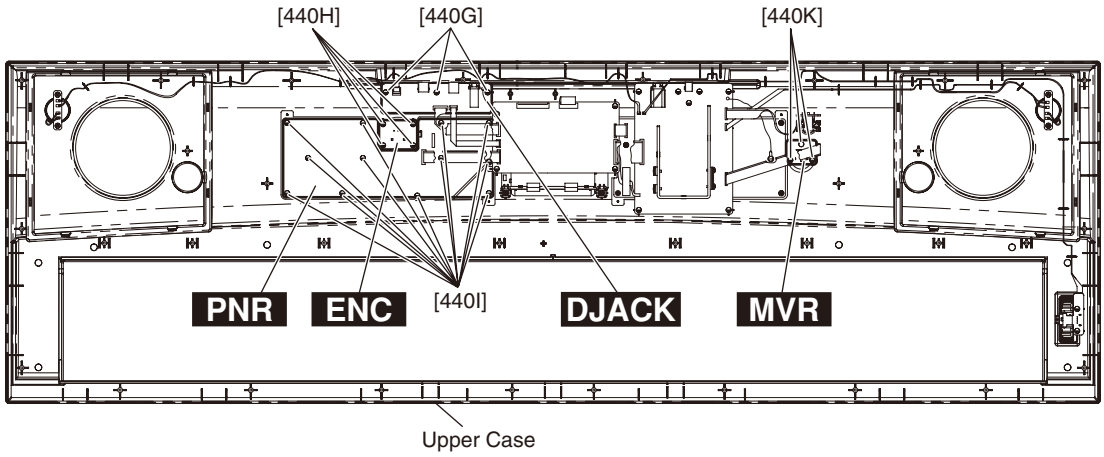

(Fig.5)

[440]: Bind Head Tapping Screw-B 3.0X8 MFZN2W3 (WE774300)

8. ENC Circuit Board (Time required: About 10 minutes)

8-1 Remove the lower case assembly. (See procedure 1.)

8-2 Remove the encoder knob from the control panel. (Fig.6)

8-3 Remove the four (4) screws marked [440H]. The ENC circuit board can then be removed. (Fig.5)

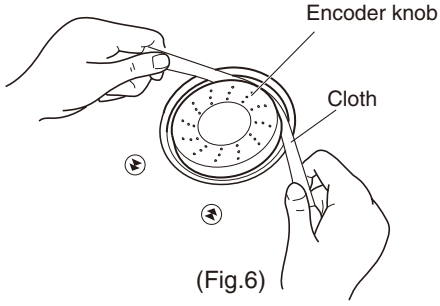

(Fig.6)

9. PNR Circuit Board (Time required: About 11 minutes)

9-1 Remove the lower case assembly. (See procedure 1.)

9-2 Remove the twelve (12) screws marked [440I]. The PNR circuit board can then be removed. (Fig.5)

10. MVR Circuit Board (Time required: About 10 minutes)

10-1 Remove the lower case assembly. (See procedure 1.)

10-2 Remove the volume knob from the control panel. (Fig.7)

10-3 Remove the three (3) screws marked [440K]. The MVR circuit board can then be removed. (Fig.5)

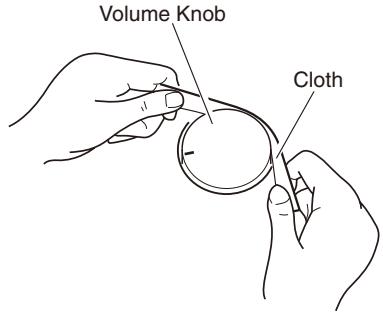

(Fig.7)

11. PNL Circuit Board (Time required: About 12 minutes)

11-1 Remove the lower case assembly. (See procedure 1.)

11-2 Remove the AM circuit board. (See procedure 5.)

11-3 Remove the ten (10) screws marked [440F]. The PNL circuit board can then be removed. (Fig.8)

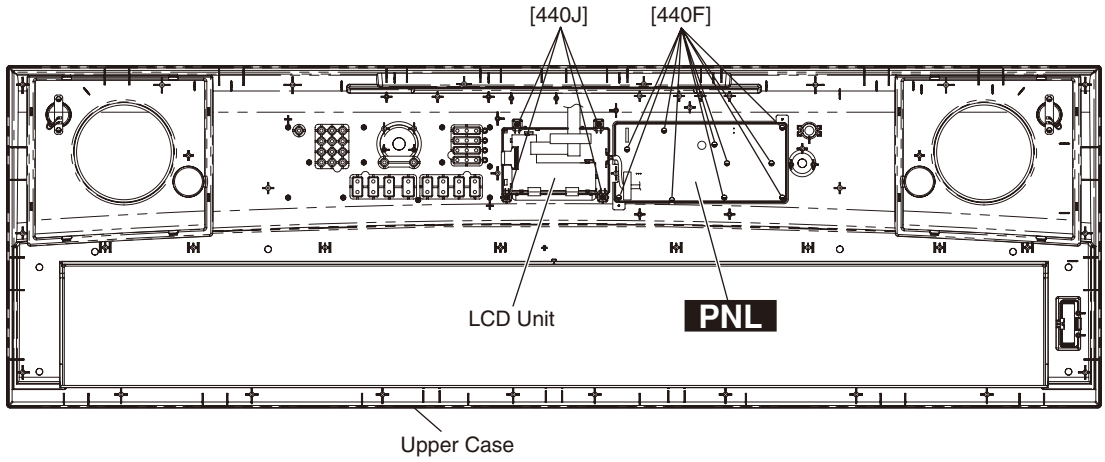

(Fig.8)

[440]: Bind Head Tapping Screw-B 3.0X8 MFZN2W3 (WE774300)

12. LCD Unit (Time required: About 11 minutes)

12-1 Remove the lower case assembly. (See procedure 1.)

12-2 Remove the DM circuit board. (See procedure 2.)

12-3 Remove the four (4) screws marked [440J]. The LCD unit can then be removed. (Fig.8)

13. Speaker (Woofer) (Time required: About 10 minutes)

13-1 Remove the lower case assembly. (See procedure 1.)

13-2 Remove the four (4) screws marked [80]. The speaker (woofer) can then be removed. (Fig.9)

* *The left and right speakers (woofers) can be removed in the same way.*

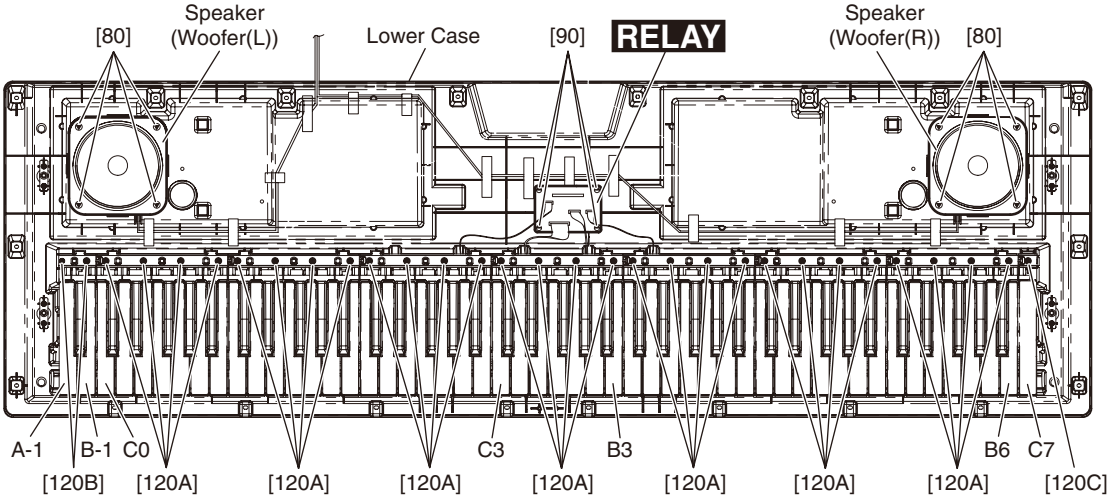

(Fig.9)

[80]: Bind Head Tapping Screw-B 4.0X12 MFZN2W3 (WE981200)
[90]: Bind Head Tapping Screw-B 3.0X8 MFZN2W3 (WE774300)
[120]: Bind Head Tapping Screw-P 3.0X20 MFZN2W3 (WF492000)

14. RELAY Circuit Board (Time required: About 10 minutes)

14-1 Remove the lower case assembly. (See procedure 1.)

14-2 Remove the four (4) screws marked [90]. The RELAY circuit board can then be removed. (Fig.9)

15. White and Black Keys

15-1 Remove the lower case assembly. (See procedure 1.)

15-2 For the C0-B6 white/black keys, remove the four (4) screws marked [120A] fixing the keys for each octave (C through B), then remove these keys for one (1) octave. (Fig.9)

At that time, push hooks on the black keys to lift the rear part, then pull and slide the keys toward you to remove it. (Fig.10)

15-3 Remove the two (2) screws marked [120B] for the A-1 to B-1 white/black keys and the one (1) screw marked [120C] for the C7 key, then remove these keys. (Fig.9)

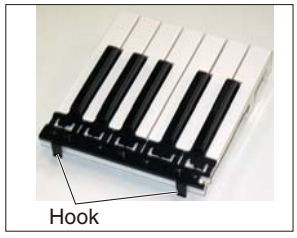

(Fig.10)

16. MK-88L, MK-88C, MK-88H Circuit Boards (Time required: About 16 minutes)

16-1 Remove the lower case assembly. (See procedure 1.)

16-2 Remove the A-1 to B2 white/black keys. (See procedure 15.)

Remove the thirteen (13) screws marked [110A]. The MK-88L circuit board and key guide can then be removed. (Fig.11, Fig.12)

16-3 Remove the C2-B5 white/black keys. (See procedure 15.)

Remove the seventeen (17) screws marked [110B]. The MK-88C circuit board and key guide can then be removed. (Fig.11, Fig.12)

16-4 Remove the C5-C7 white/black keys. (See procedure 15.)

Remove the twelve (12) screws marked [110C]. The MK-88H circuit board and key guide can then be removed. (Fig.11, Fig.12)

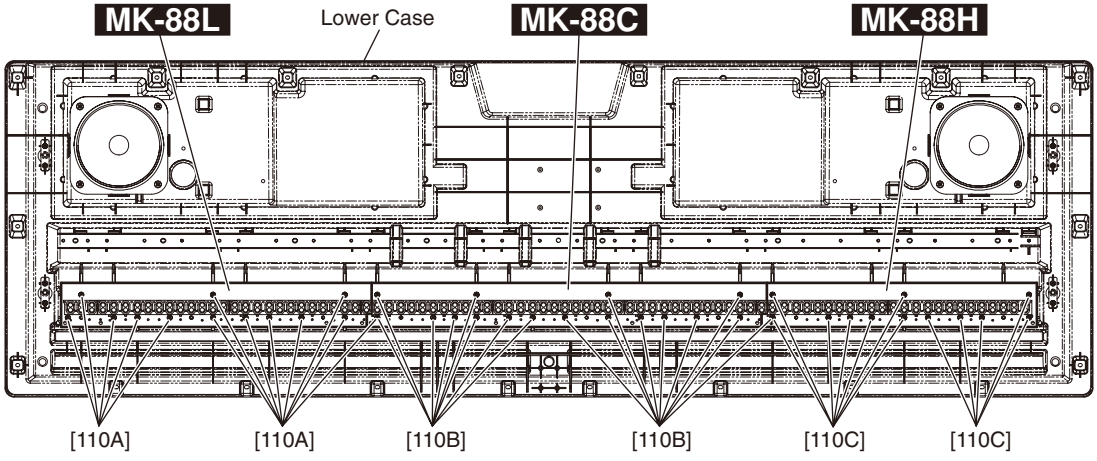

(Fig.11)

[110]: Bind Head Tapping Screw-B 3.0X10 MFZN2W3 (WE774200)



(Fig.12)

17. Rubber Contact

17-1 Remove the lower case assembly. (See procedure 1.)

17-2 Remove the keyboard assembly corresponding to the rubber contact to be removed. (See procedure 15.)

17-3 Remove the rubber contact. (Fig.12)

■ LSI PIN DESCRIPTION

ADC084S021CIMM (X6905A00) **ADC** (Analog to Digital Converter) **15**
AK4385ET (X6040A00) **DAC** (Digital to Analog Converter) **15**
ISP1161A1BD (X5879A00) **USB CONTROLLER** **15**
S1D13700F01A100 (X5422A00) **LCD CONTROLLER** **14**
YMW767-VTZ (X6055A00) **CPU** (SWL01T) **13**
µPD789022GB-A15-8E (XZ560100) **CPU** **14**

● **YMW767-VTZ** (X6055A00) **CPU** (SWL01T)

DM: IC101

PIN NO.	NAME	I/O	FUNCTION	PIN NO.	NAME	I/O	FUNCTION
1	Vss	-	Ground	65	Vss	-	Ground
2	TESTN	I	Input for TEST	66	IOV_{DD}	-	Power supply +3.3 V
3	PLLBPN	I	PLL bypass select	67	LBN/LWRN/PF6	O	External memory lower-byte enable / Port F
4	$PLLV_{DD}$	-	PLL Power supply +2.5 V	68	UBN/UWRN/PF7	O	External memory upper-byte enable / Port F
5	CIN	-	Capacitor terminal for PLL	69	RDN/PF4	O	External memory read enable / Port F
6	PLLVss	-	PLL Ground	70	MD00	I/O	External memory data bus
7	TRSTN	I	JTAG input	71	MD08	I/O	
8	TMS	I		72	MD01	I/O	
9	TCK	I		73	MD09	I/O	
10	TDI	I		74	MD02	I/O	
11	TDO	O	JTAG output	75	MD10	I/O	
12	XI	I	Crystal oscillator	76	MD03	I/O	
13	XO	O	Crystal oscillator	77	Vss	-	Ground
14	Vss	-	Ground	78	MD11	I/O	External memory data bus
15	V_{DD}	-	Power supply +2.5 V	79	MD04	I/O	
16	ICN	I	Hardware reset	80	MD12	I/O	
17	ECSN	I	CPU I/F chip select	81	MD05	I/O	
18	EWRN/PD5	I	CPU I/F write enable / Port D	82	MD13	I/O	
19	ERDN/PD4	I	CPU I/F read enable / Port D	83	MD06	I/O	
20	EA3/PD3	I	CPU I/F address bus / Port D	84	MD14	I/O	
21	EA2/PD2	I		85	MD07	I/O	
22	EA1/PD1	I		86	MD15	I/O	
23	EA0/PD0	I		87	WRN/PF5	O	
24	IOV_{DD}	-	Power supply +3.3 V	88	Vss	-	Ground
25	ED0/PC0	I/O	CPU I/F data bus / Port C	89	V_{DD}	-	Power supply +2.5 V
26	ED1/PC1	I/O		90	IOV_{DD}	-	Power supply +3.3 V
27	ED2/PC2	I/O		91	MA17	O	External memory address bus
28	ED3/PC3	I/O		92	MA16	O	
29	ED4/PC4	I/O		93	MA15	O	
30	ED5/PC5	I/O		94	MA14	O	
31	ED6/PC6	I/O		95	MA13	O	
32	ED7/PC7	I/O		96	MA12	O	
33	Vss	-	Ground	97	MA11	O	
34	IRQ0N/PH0	I	Interrupt input / Port H	98	MA10	O	
35	TxD0	O	Serial output	99	MA09	O	
36	RxD0	I	Serial input	100	MA08	O	
37	TxD1/PG2	O	Serial output / Port G	101	MA07	O	
38	RxD1/PH1	I	Serial input / Port H	102	MA06	O	
39	SCLK1/PH2	I	External synchronization clock / Port H	103	MA05	O	
40	SDO	O	Serial output	104	Vss	-	Ground
41	SDI/PH3	I	Serial input / Port H	105	MA04	O	External memory address bus
42	BCLK	O	Bit clock output	106	MA03	O	
43	WCLK/SYO	O	Word clock output	107	MA02	O	
44	SYSCLK/PG3	O	Clock output / Port G	108	MA01	O	
45	Vss	-	Ground	109	CS0N/PG0	O	External memory chip select / Port G
46	V_{DD}	-	Power supply +2.5 V	110	MA18	O	External memory address bus
47	IOV_{DD}	-	Power supply +3.3 V	111	MA19	O	
48	PA0	I/O	I/O port A	112	MA21/PF1	O	External memory address bus / Port F
49	PA1	I/O		113	MA22/PF2	O	
50	PA2	I/O		114	MA20	O	External memory address bus
51	PA3	I/O		115	MA23/PF3	O	External memory address bus / Port F
52	PA4	I/O		116	CSIN/PG1	O	External memory chip select / Port G
53	PA5	I/O		117	MA00/PF0	O	External memory address bus / Port F
54	PA6	I/O		118	Vss	-	Ground
55	PA7	I/O		119	V_{DD}	-	Power supply +2.5 V
56	Vss	-	Ground	120	IOV_{DD}	-	Power supply +3.3 V
57	PB0	I/O	I/O port B	121	CS2N/PE0	O	External memory chip select / Port E
58	PB1	I/O		122	CS3N/PE1	O	
59	PB2	I/O		123	CS4N/CASN/PE2	O	
60	PB3	I/O		124	CS5N/PE3	O	
61	PB4	I/O		125	CS50RDN/PE4	O	
62	PB5	I/O		126	CS51WRN/PE5	O	
63	PB6	I/O		127	CS52WRN/PE6	O	
64	PB7/SYI	I/O		128	CS53WRN/RASN/PE7	O	

• S1D13700F01A100 (X5422A00) LCD CONTROLLER

DM: IC201

PIN NO.	NAME	I/O	FUNCTION	PIN NO.	NAME	I/O	FUNCTION
1	VSS	–	Ground	33	VSS	–	Ground
2	AB12	I	Adorress bus	34	XCD1	O	Drain output
3	AB11	I		35	XCG1	I	Gate input
4	AB10	I		36	RESET#	I	Reset
5	AB9	I		37	SCANEN	I	Test mode set up input
6	AB8	I		38	TESTEN	I	
7	HIOVDD	–	Power supply	39	CLKI	I	Externally sourced system clock
8	AB7	I	Adorress bus	40	COREVDD	–	Power supply
9	AB6	I		41	RD#	I	Read strobe
10	AB5	I		42	WR#	I	Write strobe
11	AB4	I		43	CS#	I	Chip select
12	COREVDD	–	Power supply	44	DB7	I/O	Data bus
13	AB3	I	Adorress bus	45	DB6	I/O	
14	AB2	I		46	DB5	I/O	
15	AB1	I		47	DB4	I/O	
16	AB0	I		48	HIOVDD	–	Power supply
17	VSS	–	Ground	49	DB3	I/O	Data bus
18	FPDAT3	O	Data bus	50	DB2	I/O	
19	FPDAT2	O		51	DB1	I/O	
20	FPDAT1	O		52	DB0	I/O	
21	FPDAT0	O		53	VSS	–	Ground
22	NIOVDD	–	Power supply	54	WAIT#	O	Wait output
23	FPSHIFT	O	Shift clock	55	HIOVDD	–	Power supply
24	XECL	O	X driver enable chain clock	56	CNF0	I	Input pin for S1D 13700 setting
25	COREVDD	–	Power supply	57	CNF1	I	
26	FPLINE	O	Latch pulse	58	CNF2	I	
27	MOD	O	Frame signal	59	CNF3	I	
28	VSS	–	Ground	60	CNF4	I	
29	YSCL	O	Scan shift clock	61	AS#	I	Address strobe
30	FPFRAME	O	Scan start pluse	62	AB15	I	Address bus
31	YDIS	O	LCD power-down output	63	AB14	I	
32	NIOVDD	–	Power supply	64	AB13	I	

• µPD789022GB-A15-8E (XZ560100) CPU

DM: IC701

PIN NO.	NAME	I/O	FUNCTION	PIN NO.	NAME	I/O	FUNCTION
1	P12	I/O	Port 1	23	P32/INTP2/CPT2	I/O	Port 3/External interrupt input/Capture edge input
2	P11	I/O		24	P31/INTP1	I/O	Port 3/External interrupt input
3	P10	I/O		25	P30/INTP0	I/O	
4	P47/KR7	I/O	Port 4/Key return signal detection input	26	P22/RXD/SI0	I/O	Port 2/Asynchronous serial interface serial data input/Serial interface serial data input
5	P46/KR6	I/O		27	P21/TXD/SO0	I/O	Port 2/Asynchronous serial interface serial data output/Serial interface serial data output
6	P45/KR5	I/O		28	P20/ASCK//SCK0	I/O	Port 2/Asynchronous serial interface serial clock input/Serial interface serial clock
7	P44/KR4	I/O		29	P07	I/O	Port 0
8	P43/KR3	I/O		30	P06	I/O	
9	P42/KR2	I/O		31	P05	I/O	
10	P41/KR1	I/O		32	P04	I/O	
11	P40/KR0	I/O		33	P03	I/O	
12	NC			34	P02	I/O	
13	IC		Internally connected (N.C.)	35	P01	I/O	
14	X2		Clock	36	P00	I/O	
15	X1	I		37	NC		
16	VSS0		Ground	38	VDD1		Power supply
17	VDD0		Power supply	39	VSS1		Ground
18	/RESET	I	System reset	40	P17	I/O	Port 1
19	P53	I/O	Port 5	41	P16	I/O	
20	P52	I/O		42	P15	I/O	
21	P51/TO2	I/O	Port 5/16-bit timer output	43	P14	I/O	
22	P50/TI0/TO0	I/O	Port 5/External count clock input to 8-bit timer/8-bit timer output	44	P13	I/O	

● ISP1161A1BD (X5879A00) USB CONTROLLER

DM: IC301

PIN NO.	NAME	I/O	FUNCTION	PIN NO.	NAME	I/O	FUNCTION
1	DGND	-	Digital ground	33	NDP_SEL	I	Indicates to the HC
2	D2	I/O	DATA bus	34	EOT	I	EOT input
3	D3	I/O		35	DGND	-	Digital ground
4	D4	I/O		36	D_SUSPEND	O	DC 'suspend' state output
5	D5	I/O		37	D_WAKEUP	I	DC wake-up input
6	D6	I/O		38	/GL	O	GoodLink LED output
7	D7	I/O		39	D_VBUS	I	DC USB input
8	DGND	-	Digital ground	40	H_WAKEUP	I	HC wake-up input
9	D8	I/O	DATA bus	41	CLKOUT	O	Programmable clock out
10	D9	I/O		42	H_SUSPEND	O	HC 'suspend' output
11	D10	I/O		43	XTAL1	I	Crystal input
12	D11	I/O		44	XTAL2	I	Crystal output
13	D12	I/O		45	DGND	-	Digital ground
14	D13	I/O		46	/H_PSW1	O	Power switching control
15	DGND	-	Digital ground	47	/H_PSW2	O	Power switching control
16	D14	I/O	DATA bus	48	D_DM	AI/O	USB D- data line for DC
17	D15	I/O		49	D_DP	AI/O	USB D+ data line for DC
18	DGND	-	Digital ground	50	H_DM1	AI/O	USB D- data line for HC
19	Vhold1	-	Voltage holding pin	51	H_DP1	AI/O	USB D+ data line for HC
20	NC	-	No connection	52	H_DM2	AI/O	USB D- data line for HC
21	/CS	I	Chip select	53	H_DP2	AI/O	USB D+ data line for HC
22	/RD	I	Read strobe	54	/H_OC1	I	Overcurrent sensing input
23	/WR	I	Write strobe	55	/H_OC2	I	Overcurrent sensing input
24	Vhold2	-	Voltage holding pin	56	Vcc	-	Power supply(3.3V)
25	DREQ1	O	HC DMA request	57	AGND	-	Analog ground
26	DREQ2	O	DC DMA request	58	Vreg	-	3.3V regulator output
27	/DACK1	I	HC DMA acknowledge	59	A0	I	Address bus
28	/DACk2	I	DC DMA acknowledge	60	A1	I	Address bus
29	INT1	O	HC interrupt output	61	NC	-	No connection
30	INT2	O	DC interrupt output	62	DGND	-	Digital ground
31	TEST	O	test output	63	D0	I/O	DATA bus
32	/RESET	I	Reset input	64	D1	I/O	

● AK4385ET (X6040A00) DAC (Digital to Analog Converter)

DM: IC401

PIN NO.	NAME	I/O	FUNCTION	PIN NO.	NAME	I/O	FUNCTION
1	MCLK	I	Master Clock	9	AOUTR-	O	Rch Analog out(-)
2	BICK	I	Audio Serial Data Clock	10	AOUTR+	O	Rch Analog out(+)
3	SDTI	I	Audio Serial Date Input	11	AOUTL-	O	Lch Analog out(-)
4	LRCK	I	L/R Clock	12	AOUTL+	O	Lch Analog out(+)
5	PDN	I	Power Down mode	13	Vss	-	Ground
6	CSN	I	Chip Select	14	VDD	-	Power Supply
7	CCLK	I	Control Data Input	15	DZFR	O	Rch Data Zero Input Detect
8	CDTI	I	Control Data Input	16	DZFL	O	Lch Data Zero Input Detect

● ADC084S021CIMM (X6905A00) ADC (Analog to Digital Converter)

DM: IC501

PIN NO.	NAME	I/O	FUNCTION	PIN NO.	NAME	I/O	FUNCTION
1	$\overline{CS}$	I	Chip select	6	AIN2	I/O	Analog input
2	VA	-	Power supply +3.3 V	7	AIN1	I/O	
3	GND	-	Ground	8	DIN	I	Digital data input
4	AIN4	I/O	Analog input	9	DOUT	O	Digital data output
5	AIN3	I/O		10	SCLK	I	Digital clock input

IC BLOCK DIAGRAM

- **SN74LV32APWR** (X5647A00)
  Quad 2 Input OR
  DM:IC805

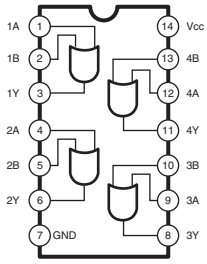

- **SN74AHCT1G08DCKR** (X0158A00)
- **74V1T08CTR** (X7542A00)
  Single 2-Input Positive-AND Gate
  DM: IC103,104

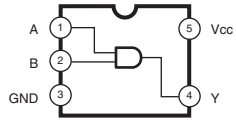

FUNCTION TABLE

INPUTS		OUTPUT
A	B	Y
H	H	H
L	X	L
X	L	L

- **NJM4580E(TE2)** (X2331A00)
  Dual Operational Amplifier
  DM: IC402

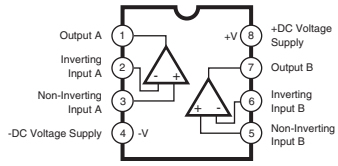

- **MC34063EBD-TR** (X7371A00)
  DC-DC Converter
  DM:IC202

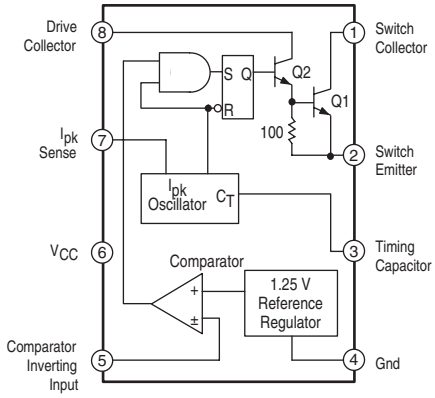

- **R5520H001A** (X7414A00)
  USB High Side Switch
  DM: IC302

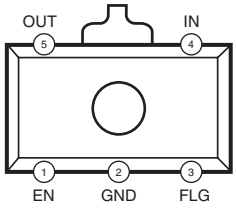

Pin No.	Pin Name	Function
1	EN	Enableb (Input)
2	GND	Ground
3	FLG	Fault Flag (Open-drain Output)
4	IN	Power Supply Input
5	OUT	Switch Output (Switch of the high side switch)

- **LA4625** (XY209A00)
  Power Amplifier
  AM: IC201

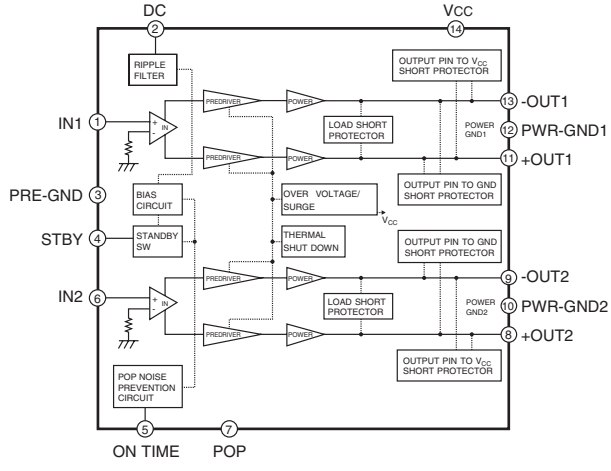

■ CIRCUIT BOARDS

AM Circuit Board (X9121D0) **19**
DJACK Circuit Board (X9121D0) **17**
DM Circuit Board (X9734B0) **18**
ENC Circuit Board (X9121D0) **22**
MK-88C Circuit Board (X0001A0) **24**
MK-88H Circuit Board (X0000A0) **23**
MK-88L Circuit Board (X0002A0) **23**
MVR Circuit Board (X9121D0) **22**
PB Circuit Board (X9121D0) **22**
PNL Circuit Board (X7137D0) **20**
PNR Circuit Board (X7137D0) **21**
PSW Circuit Board (X9121D0) **22**
RELAY Circuit Board (X7138C0) **22**
TW Circuit Board (X9121D0) **22**

Note: See parts list for details of circuit board component parts.

● DJACK Circuit Board

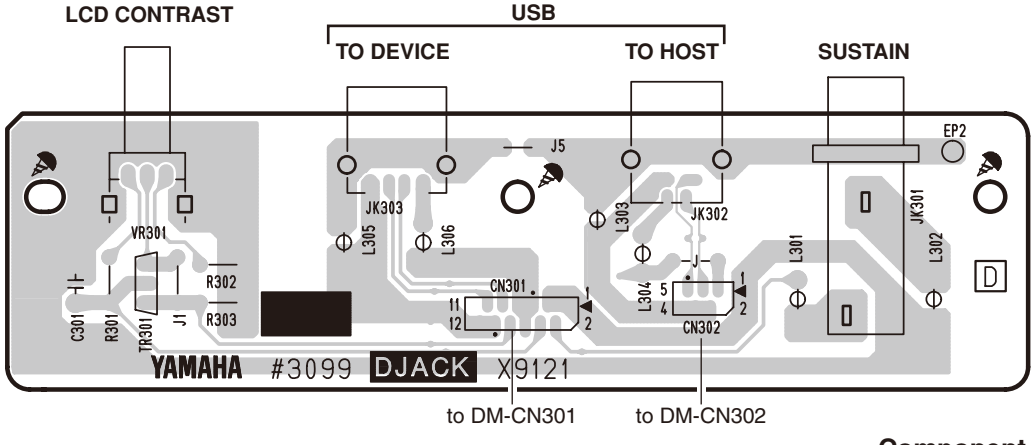

Component side

• DM Circuit Board

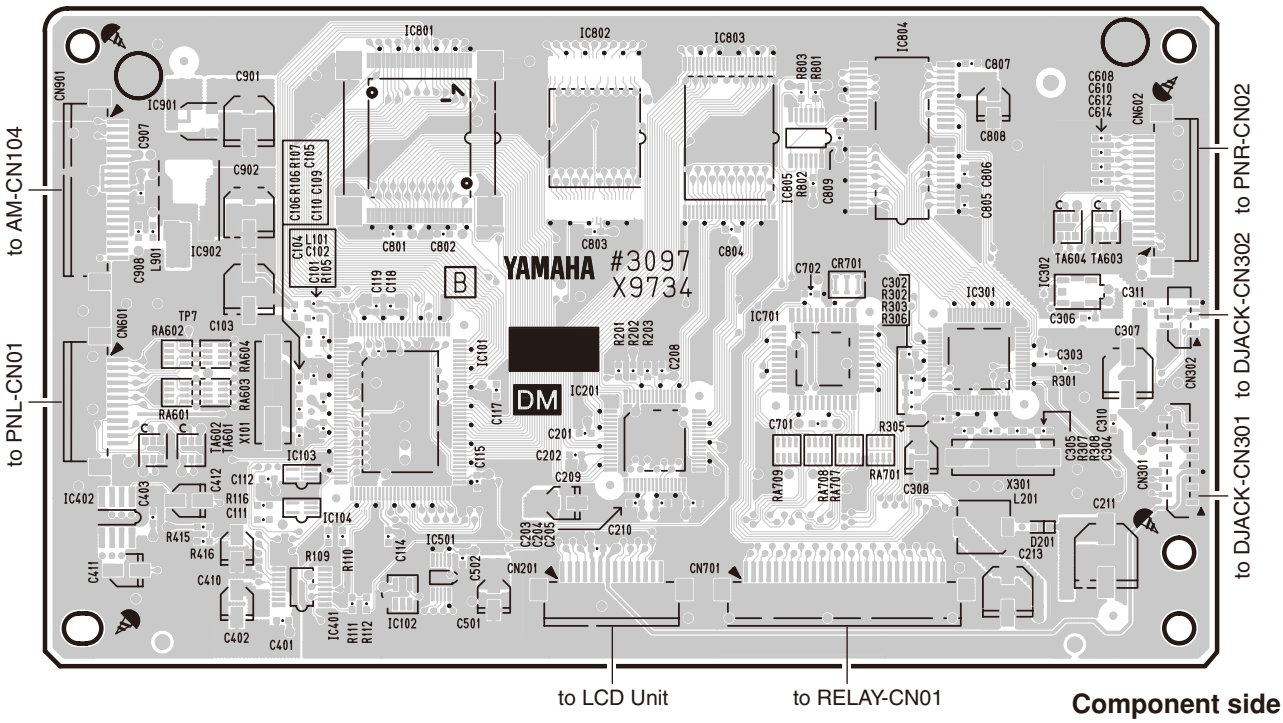

Component side

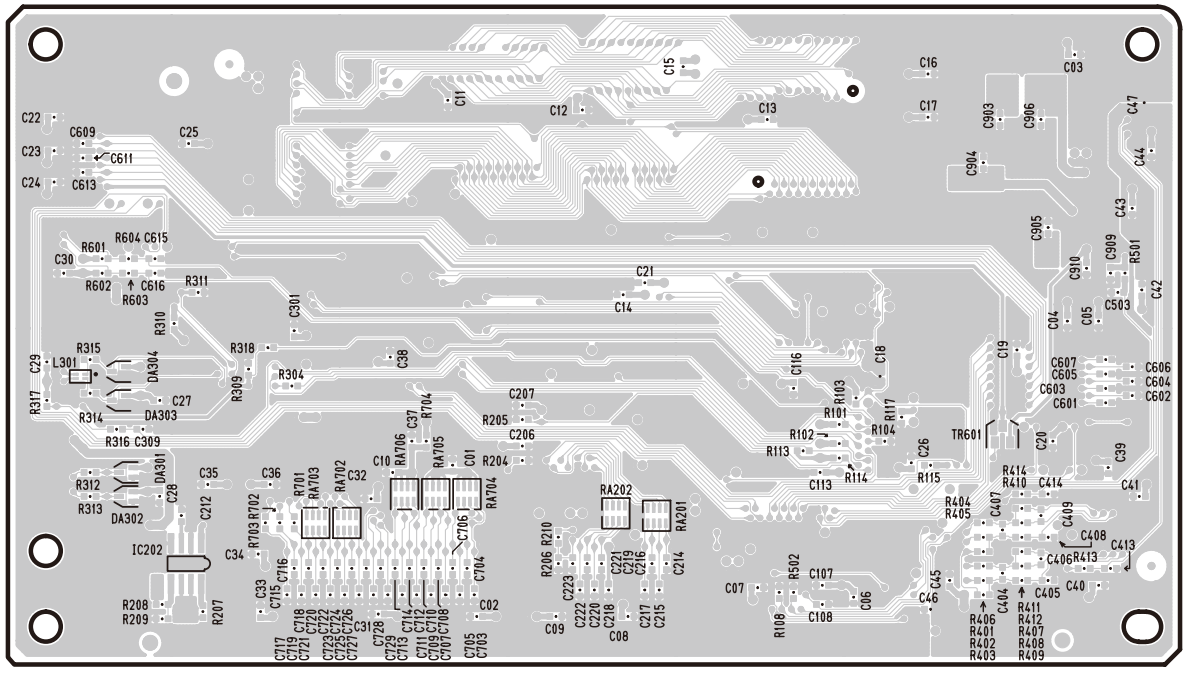

Pattern side

● AM Circuit Board

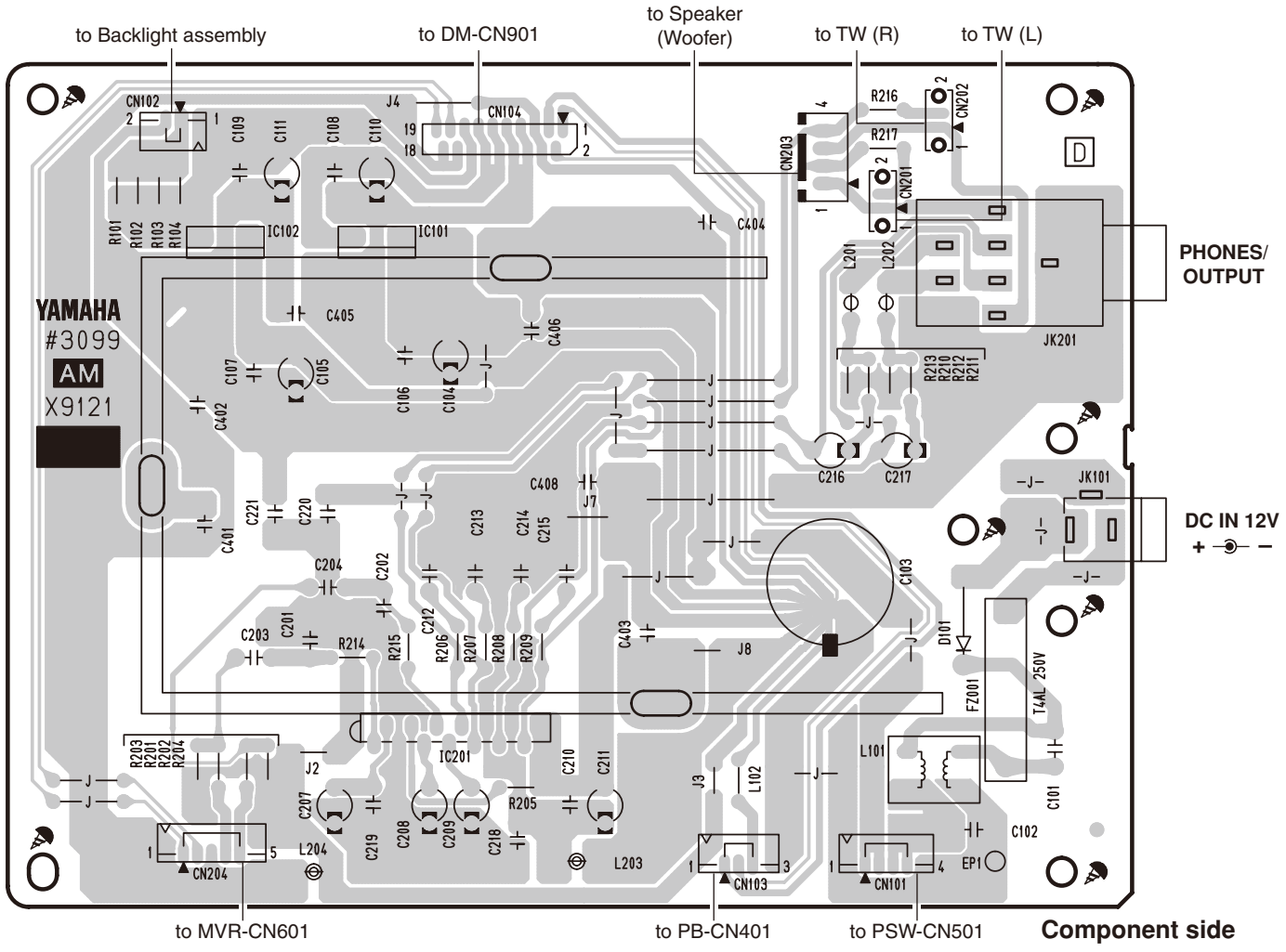

A nonwoven fabric does not overflow from the end of a jack.

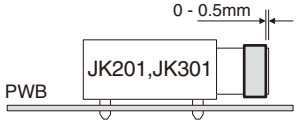

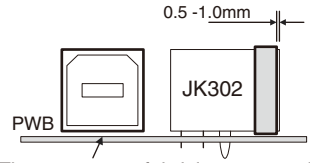

The nonwoven fabricis prevented from overlapping on the PWB side.

To pile it up in the upper side, it is pasted.

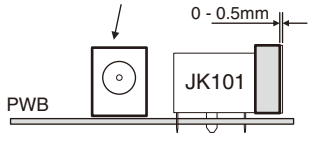

● PNL Circuit Board

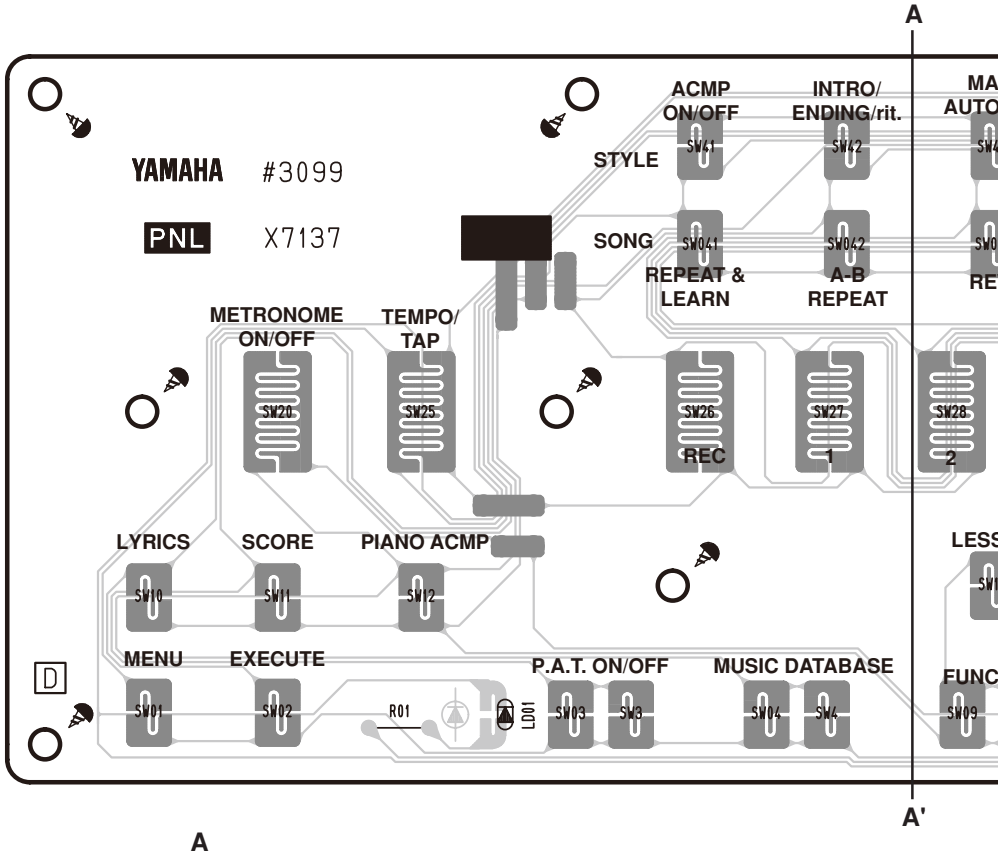

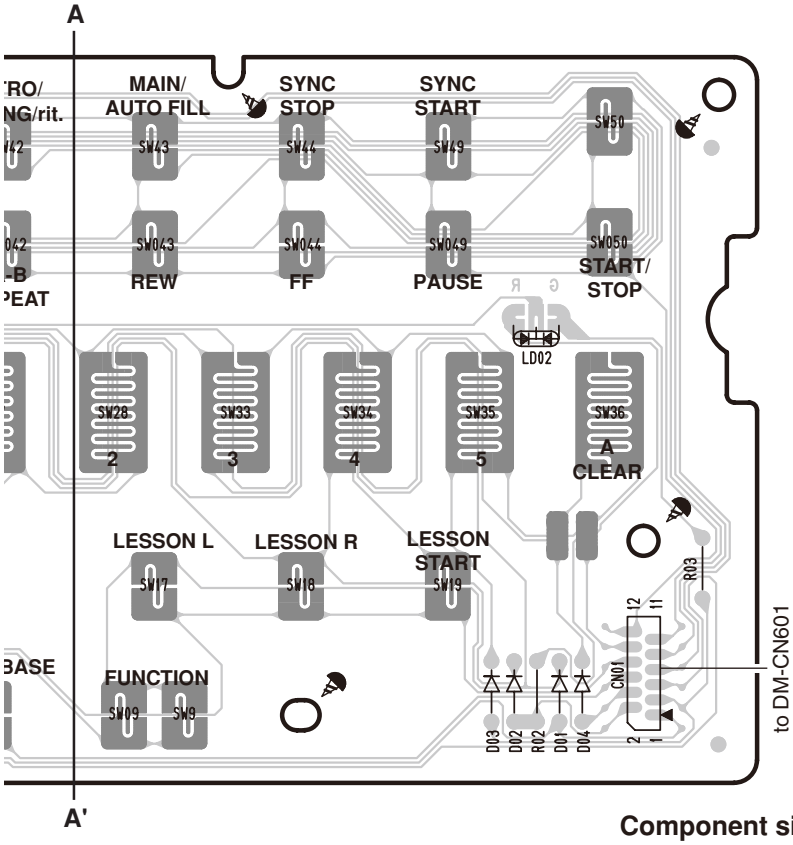

Component side

● PNR Circuit Board

Scale: 90/100

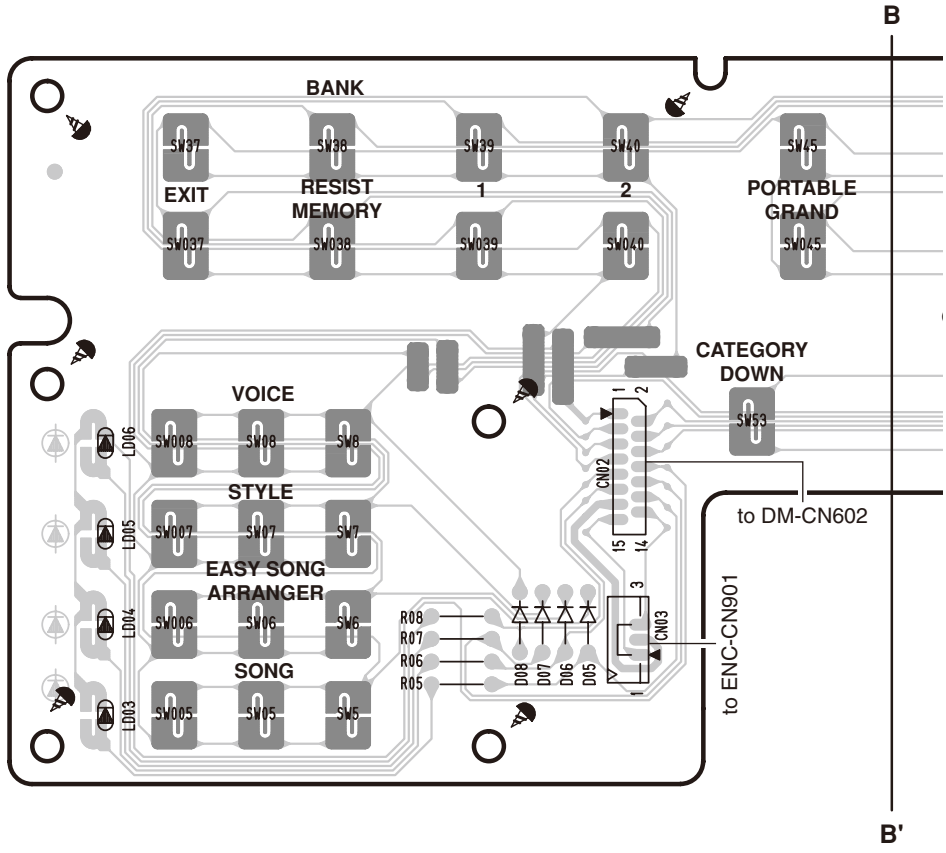

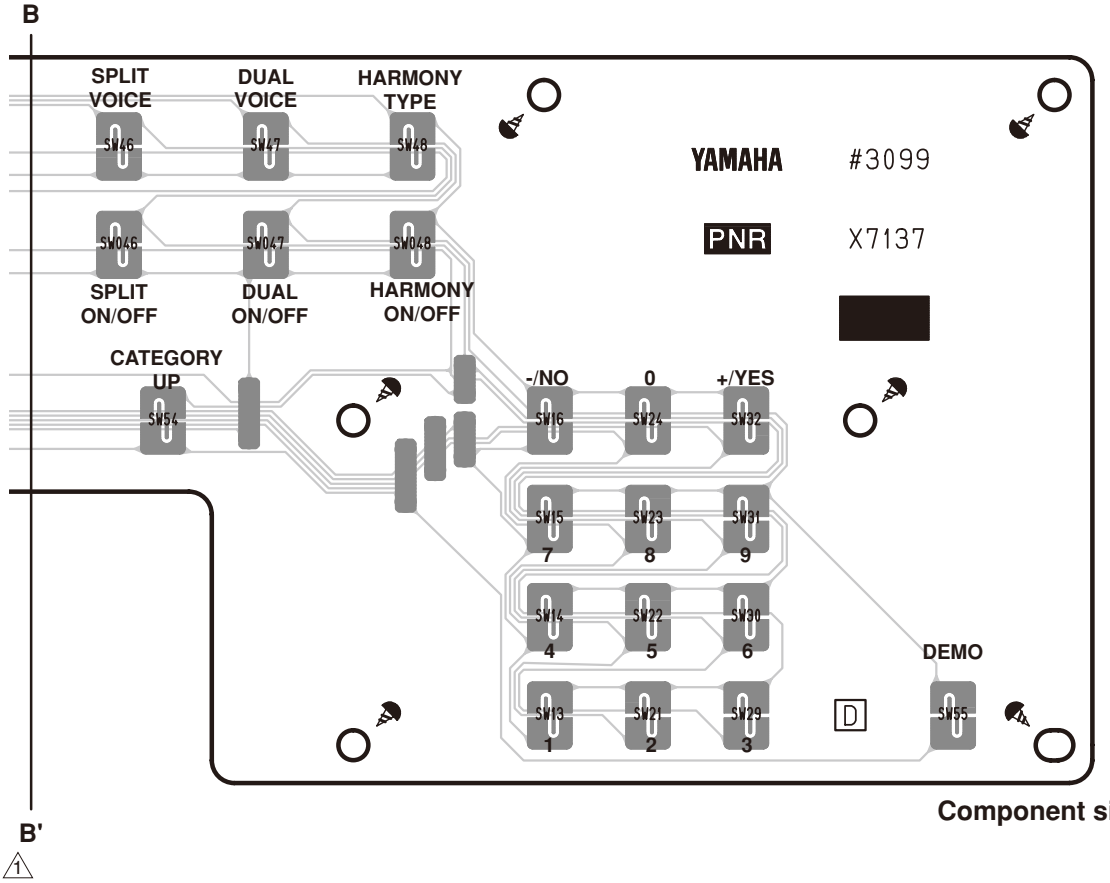

Component side

2NA-WG25520 1

● ENC Circuit Board

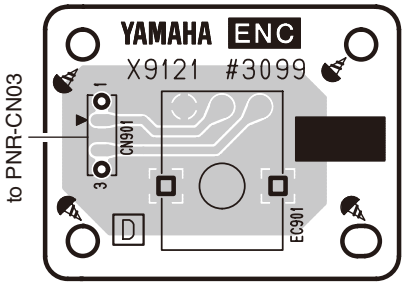

Component side

● MVR Circuit Board

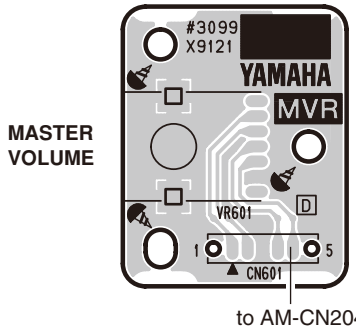

Component side

● PSW Circuit Board

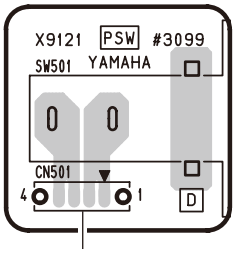

Component side

● PB Circuit Board

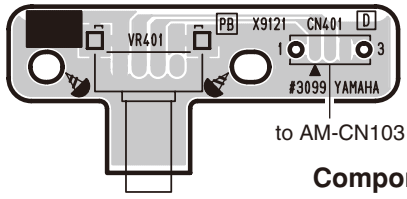

Component side

● TW (L) Circuit Board

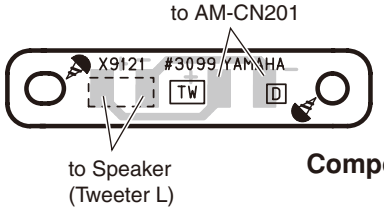

Component side

● TW (R) Circuit Board

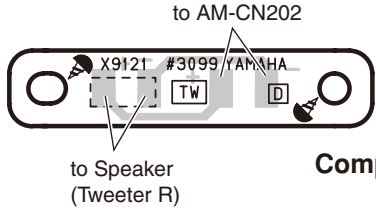

Component side

● RELAY Circuit Board

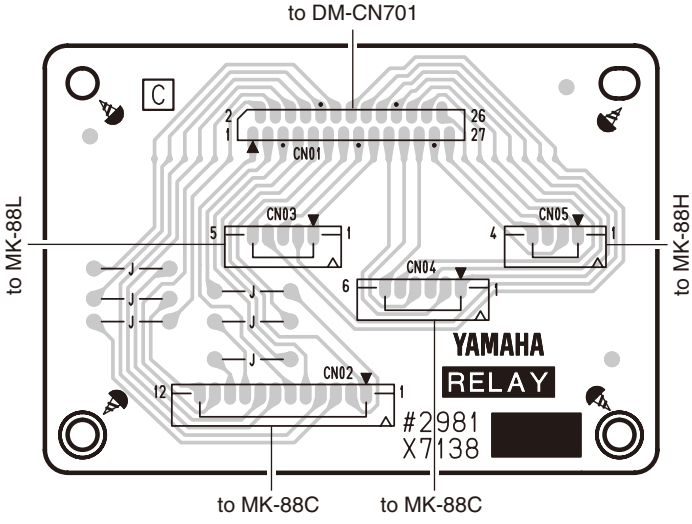

Component side

ENC: 2NA-WG25900 ⚠2
MVR: 2NA-WG25900 ⚠2
PSW: 2NA-WG25900 ⚠2
PB: 2NA-WG25900 ⚠2
TW: 2NA-WG25900 ⚠2
RELAY: 2NA-WG20090

● MK-88H Circuit Board

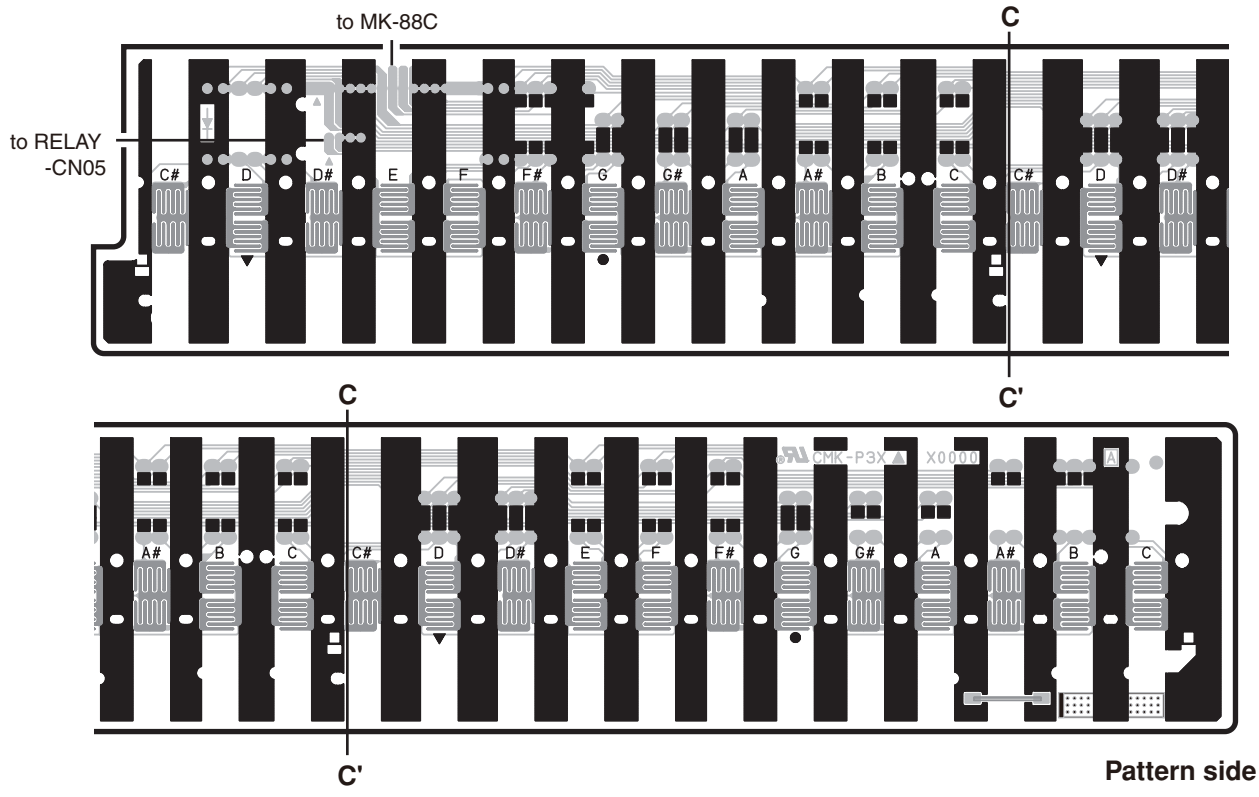

Pattern side

● MK-88L Circuit Board

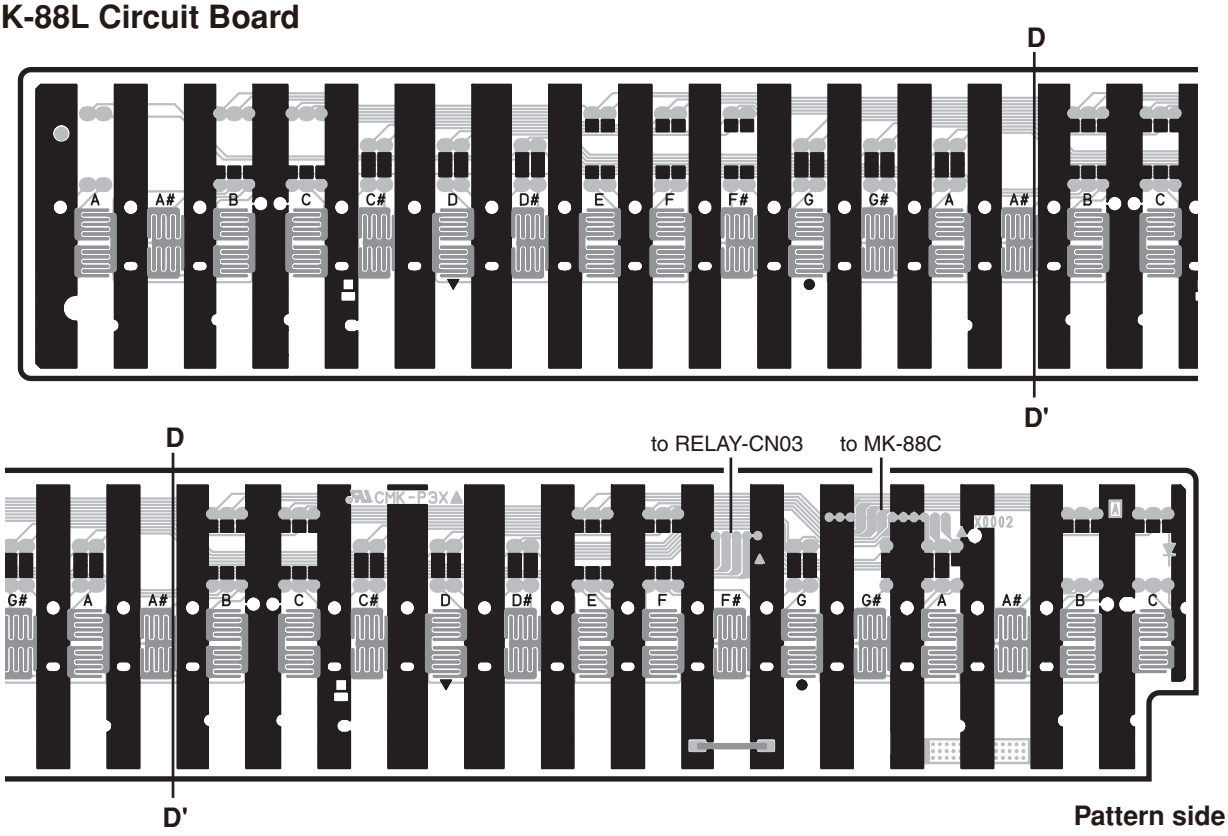

Pattern side

MK-88H: 2LPK8-X0000A0
MK-88L: 2LPK8-X0002A0

● MK-88C Circuit Board

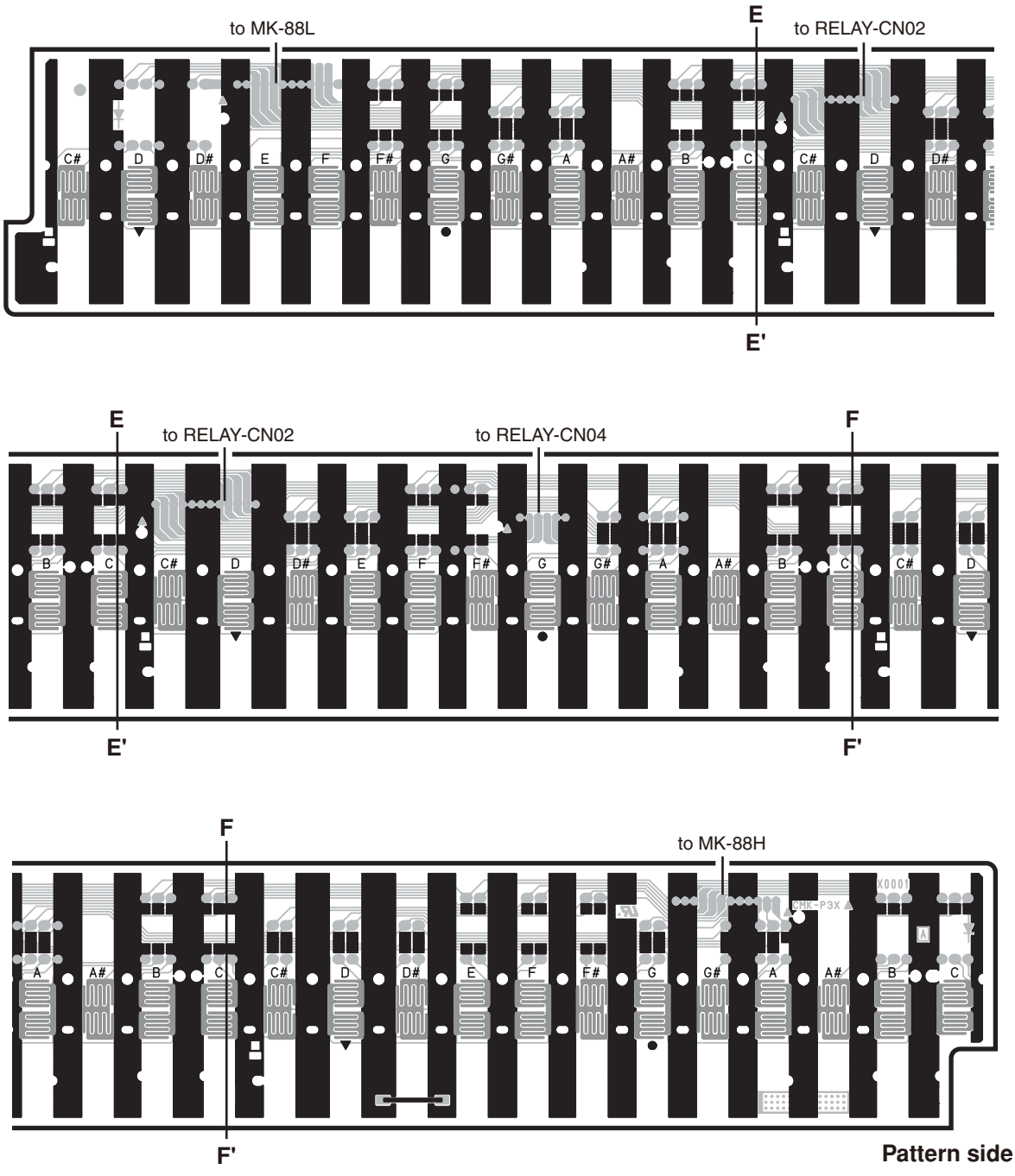

TEST PROGRAM

*** If you execute the test No.47 (Factory Set), then the user's preset data may be lost. Therefore, back up the user's data in advance.**

A. PREPARATION

1) PA-5D or PA-51 (AC adaptor) is used.
2) Measuring device: Frequency counter, which can detect thousandth value or more, Level meter (with JIS-C filter), Oscilloscope
   Note: Use a stereo plug and connect a load resistor of 33 ohms to the [PHONES/OUTPUT] jack for measurement unless otherwise specified. Input impedance of the measuring device should be 1M ohms or more.
3) Jigs: Foot switch (FC-4 or FC-5), USB cable, USB memory, USB-MIDI driver (*1)
   PC (Install a USB-MIDI driver (*1) in PC and finish the THROUGH setup.)

   *1 Obtain the USB-MIDI driver from CD-ROM (X9318A00) for DGX-530/YPG-535 or Yamaha official website. (URL>>http://www.yamahapkclub.com)

B. HOW TO ENTER THE TEST PROGRAM

While pressing the C#2, F2 and G#2 keys, turn the [STANDBY/ON] switch on.

DGX-530/YPG-535

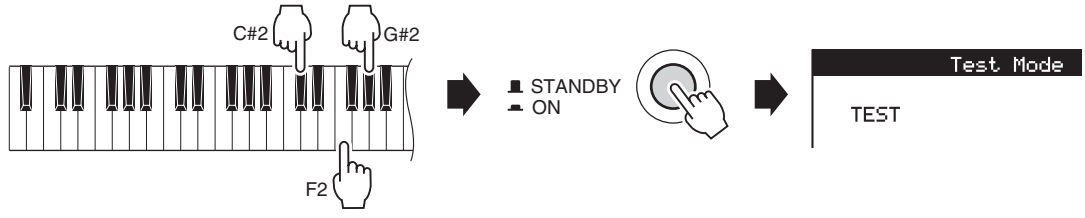

C. TEST PROCEDURE

1) When the test program is started, "TEST" will be displayed on the LCD.
2) Press the [-] or [+] button of the number buttons to select a test program item.
3) Press the [START/STOP] button to execute the test.

* If the test result is OK, or the test item is completed, press the [START/STOP] button again to return to the test item selection display.

* Press the [-] or [+] button of the number buttons to select the next test program item.

* When the test result is OK, an asterisk (*) is added in front of its item name on display.
If the test result is NG, press the [DEMO] button or the lowest (leftmost) white key to return the item selection display.

D. TEST PROGRAM LIST

(dBu=dBm)

TEST No.	LCD Display	Test Descriptions, Judgment Criteria
--	--	Contrast Check Set the contrast knob to the legible position of LCD. When the contrast knob is turned clockwise (or counterclockwise), the LCD becomes blue (or white).
1	001 Version	Displays ROM (Program) version. (In case of OK:"XXX" Prog, NG:"Err" Prog)
2	002 Rom Chk1	Checks the ROM that is connected to the CPU. (OK:"Rom OK", NG:"Rom NG") The test results appear on the LCD. Check that the LCD displays "Rom OK".

TEST No.	LCD Display	Test Descriptions, Judgment Criteria
3	003 Ram Chk1	Checks the RAM that is connected to the CPU. (OK:“Ram OK”, NG:“Ram NG”) The test results appear on the LCD. Check that the LCD displays “Ram OK”.
6	006 Flash Rom Chk1	Checks the flash ROM that is connected to CPU bus. The check result appears on the LCD. Check that the LCD displays “Flash Rom OK”. (OK:“Flash Rom OK”, NG:“Flash Rom NG”)
7	007 USB Storage Chk	Checks USB. (OK:“USB Storage OK”, NG:“USB Storage NG”) Connect a USB memory to the [USB TO DEVICE] jack with a USB cable, and execute the test. The test results appear on the LCD. Check that the LCD displays “USB Storage OK”.
11	011 TG1 Chk	Outputs the sine wave by changing the channels in sequence from C2 to G4. [32 notes] Check the sound by hearing that there is no noise or abnormal sound. After auto-scaling is finished, individual keys can be played. (If playing two or more keys simultaneously, the first pressed key has priority to make a sound.)
13	013 Pit Chk	Connect the frequency counter to the [PHONES/OUTPUT] jack. (L or R) Sets PAN to Center and produces a signal at 440.14 Hz +/-0.22 Hz. Check that the correct signal is produced.
14	014 Output R	Connect the level meter (with a JIS-C filter) to the [PHONES/OUTPUT] jack. (33 ohm load) Set the [MASTER VOLUME] at maximum and check the output level (1 kHz sine wave, PAN=R). PHONES L : less than -45.0 dBu PHONES R : -1.0 dBu +/-2 dB
15	015 Output L	Connect the level meter (with a JIS-C filter) to the [PHONES/OUTPUT] jack. (33 ohm load) Set the [MASTER VOLUME] at maximum and check the output level (1 kHz sine wave, PAN=L). PHONES L : -1.0 dBu +/- 2 dB PHONES R : less than -45.0 dBu
20	020 SW Chk	Checks the switches on the panel. Press the switches on the LCD as instructed. A pre-assigned note is output when the switch is pressed. A rotary encoder is clockwise set up to UP and is counterclockwise set to DOWN. (See P.28 “Table 1”.) The check result appears on the LCD when all the switches are pressed as instructed. Check that “SW OK” is displayed. Also, check that no key stick is existed. (OK:“SW OK”, NG:“SW NG”, When multiple switchs are pressed at the same time:“Over Two”)
21	021 All LED Chk	Check that all the LEDs on the panel are on.
22	022 Red LED Chk	Check that all the red LEDs on the panel are on.
23	023 Green LED Chk	Check that all the green LEDs on the panel are on.
28	028 LCD On	Check that all LCD dots are on. (The whole screen becomes white.)
29	029 LCD Off	Check that all LCD dots are off. (The whole screen becomes blue.)
31	031 Pedal1 Chk	Connect the foot switch (FC-4 or FC-5) to the [SUSTAIN] jack. Check that the C3 note is output when the [START/STOP] button is pressed while stepping the pedal and the C4 note is output when releasing the pedal. The sound stops when stepping the pedal again. Check that the LCD displays “Pedal1 OK”. (OK:“Pedal1 OK”, NG:“Pedal1 NG”)

TEST No.	LCD Display	Test Descriptions, Judgment Criteria
33	033 Pitch Bend Chk	Checks the pitch bend wheel. (First, it checks if the center position of the wheel is correct or not.) Check that the C3 note is output when rotating the [PITCH BEND] wheel to minimum and the C4 note is output when rotating it to maximum. (OK:"Pitch Bend OK", NG:"Pitch Bend NG", If the center position of the wheel is not correct:"Pitch Bend C NG")
37	037 MIDI Chk	Checks MIDI and USB. Connect the PC with a USB-MIDI driver installed and the [USB TO HOST] terminal using a USB cable, and execute the test. (As for the PC, install a USB-MIDI driver in the PC and finish the THROUGH setup, in advance.) Check that the C4 note is output and the LCD displays "MIDI OK". (OK:"MIDI OK", NG:"MIDI NG")
41	041 Rom Chk2	Checks the ROM that is connected to the CPU. The test result appears on the LCD. Check that the LCD displays "Rom OK". It takes about 20 seconds. (OK:"Rom OK", NG:"Rom NG")
42	042 Ram Chk2	Check the RAM that is connected to the CPU. The test results appear on the LCD. Check that the LCD displays "Ram OK". It takes about 5 seconds. (OK:"Ram OK", NG:"Ram NG")
45	045 Flash Rom Chk2	Checks the flash ROM that is connected to CPU bus. The check result appears on the LCD. Check that the LCD displays "Flash Ram OK". It takes about 60 seconds. (OK:"Flash Rom OK", NG:"Flash Rom NG")
47	047 Factory set	All backup domains are initialized and it changes into a factory-shipments state when executing this test.
48	048 Test Exit	Exit from the test program after executing this test.
--	--	Noise Check (in the normal mode) Connect the level meter (with a JIS-C filter) to the [PHONES/OUTPUT] jack. (33 ohm load) Set the [MASTER VOLUME] at maximum and check that the noise level is within the range below. PHONES L/R : less than -74.0 dBu

* Note: As for the test no.41 - 45, it takes time. If you want to skip them, press the [+/YES] button several times to go to the test no.47 (Factory Set).

Table 1

No.	SW Name	Display	Note No.
1	DIAL UP	Dial Up	C2
2	DIAL DOWN	Dial Down	C#2
3	FILE MENU	File Menu	D2
4	FILE EXCUTE	File Excute	D#2
5	P.A.T.	P. A.T.	E2
6	Music Data Base	MusicDataBase	F2
7	FUNCTION	Function	F#2
8	LYRICS	Lyrics	G2
9	SCORE	Score	G#2
10	Chord Fingering	Chord Finger	A2
11	LESSON L	Lesson L	A#2
12	LESSON R	Lesson R	B2
13	LESSON START	Lesson Start	C3
14	METRONOME	Metronome	C#3
15	TEMPO/TAP	Tempo/TAP	D3
16	SONG REC	SONG REC	D#3
17	SONG 1	SONG 1	E3
18	SONG 2	SONG 2	F3
19	SONG 3	SONG 3	F#3
20	SONG 4	SONG 4	G3
21	SONG 5	SONG 5	G#3
22	SONG A	SONG A	A3
23	ACMP	ACMP	A#3
24	INTRO/ENDING	Intro/Ending	B3
25	MAIN/AUTO FILL	Main/Fill	C4
26	SYNC STOP	Sync Stop	C#4
27	SYNC START	Sync Start	D4
28	START/STOP	Start/Stop	D#4
29	SONG	SONG	E4
30	EASY SONG ARRANGER	EasySongArrange	F4
31	STYLE	Style	F#4
32	VOICE	Voice	G4
33	CATEGORY –	Category –	G#4
34	CATEGORY +	Category +	A4
35	TENKEY 1	Tenkey 1	A#4
36	TENKEY 2	Tenkey 2	B4
37	TENKEY 3	Tenkey 3	C5
38	TENKEY 4	Tenkey 4	C#5
39	TENKEY 5	Tenkey 5	D5
40	TENKEY 6	Tenkey 6	D#5
41	TENKEY 7	Tenkey 7	E5
42	TENKEY 8	Tenkey 8	F5
43	TENKEY 9	Tenkey 9	F#5
44	TENKEY –	Tenkey –	G5
45	TENKEY 0	Tenkey 0	G#5
46	TENKEY +	Tenkey +	A5
47	EXIT	Exit	A#5
48	BANK/MEMORY	Memory	B5
49	REGIST 1	Regist 1	C6
50	REGIST 2	Regist 2	C#6
51	PORTABLE GRAND	Portable Grand	D6
52	SPLIT	Split	D#6
53	DUAL	Dual	E6
54	HARMONY	Harmony	F6
55	DEMO	Demo	F#6

INITIALIZATION

This function erases all backup data in the instrument's flash memory and restores the initial default settings. The following initialization procedures are provided.

Backup Clear

To clear data backed up to the internal flash memory (DM circuit board: IC803)—panel user setting, registration memory, user songs, style file—turn the power on by pressing the [STANDBY/ON] switch while holding the highest white key on the keyboard. The backed up data will be erased and the default values restored.

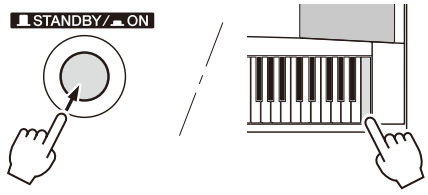

Flash Clear

To clear song, style and music database files that have been transferred to the internal flash memory (DM circuit board: IC803) from a computer, turn the power on by pressing the [STANDBY/ON] switch while simultaneously holding the highest white key on the keyboard and the three highest black keys.

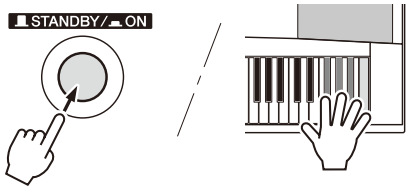



• When you execute the Flash Clear operation, data you have purchased will also be cleared. Be sure to save data you want to keep to a computer.

USER DATA BACKUP

To backup user data to an external device, use a USB flash memory.
Refer to the following for the data you can backup using it.

List of data that can be backed up

- User Songs
- Styles
- Registration Memory
- FUNCTION Settings: Tuning, Split Point, Touch Sensitivity, Style Volume, Song Volume, Metronome Volume, Grade, Demo Cancel, Language Selection, Panel Sustain, Master EQ type, Chord Fingering

Connecting a USB Flash Memory

1 Connect a USB flash memory to the USB TO DEVICE terminal, being careful to insert it with the proper orientation.

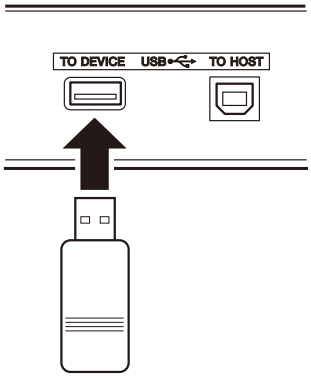

A message (information or confirmation dialog) sometimes appears on the display to facilitate operation.

2 Check that the file control icon is shown in the MAIN display.

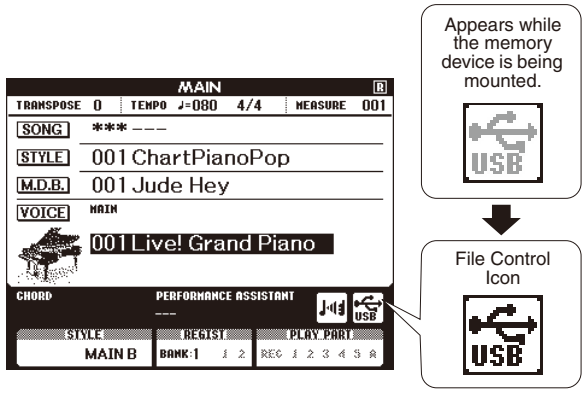

You can go to the FILE CONTROL display from which you can access USB flash memory operations by pressing the [MENU] button from this display.
(Do not press this button now, but only when instructed to in the sections below.)

NOTE

- *No sound will be produced if you play the keyboard while the FILE CONTROL display is showing. Also, in this state only buttons related to file functions will be active.*
- *The FILE CONTROL display will not appear in any of the following cases:*
  - *During style or song playback.*
  - *During a lesson.*
  - *While data is being loaded from a USB flash memory.*

Formatting USB Flash Memory

New USB flash memory must be formatted before they can be used by this instrument.

⚠ CAUTION

- *If you format a USB flash memory that already contains data, all of the data will be erased. Be careful not to erase important data when using the format function.*

1 After connecting the USB flash memory to be formatted to the instrument's USB TO DEVICE terminal, check that the icon is showing in the MAIN display.



2 Press the FILE CONTROL [MENU] button.

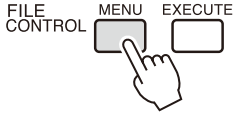

3 Use the CATEGORY [▲▲] and [▼▼] buttons to select the Format item.

The display prompts you for confirmation.

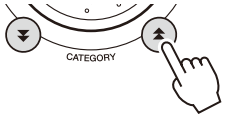

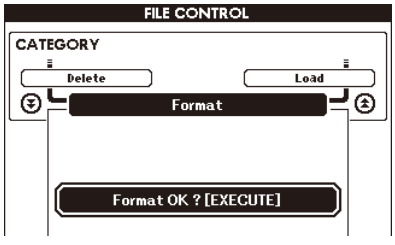

4 Press the [EXECUTE] button and the display prompts you for confirmation.

You can press the [-] button at this point to cancel the operation.

5 Press the [EXECUTE] button again, or the [+] button, and the format operation will begin.

⚠ CAUTION

- *Once the format-in-progress message appears on the display the format operation cannot be canceled. Never turn off the power or remove the USB flash memory during this operation.*

6 A message will appear on the display to inform you that the operation has finished.

Press the [EXIT] button to return to the MAIN display.

NOTE

- *If the USB flash memory has been write-protected, an appropriate message will appear on the display and you will not be able to execute the operation.*

Saving Data

Three types of data are saved to one "User File" by this operation: user song, style file, and registration memory data. When you save a user song the style file and registration memory are also saved automatically.

1 Make sure that a properly formatted USB flash memory has been properly connected to the instrument's USB TO DEVICE terminal, and that the icon is showing in the MAIN display.

2 Press the FILE CONTROL [MENU] button.

3 Use the CATEGORY [▲] and [▼] buttons to locate the User File Save item.

A default file name will automatically be created.

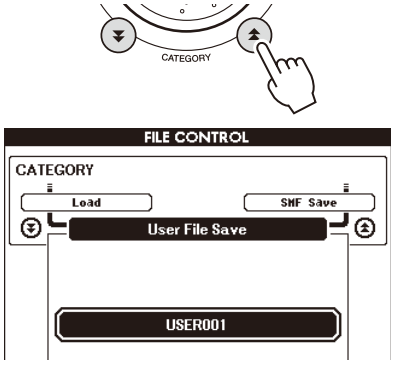

● To Overwrite an Existing File

If you want to overwrite a file that already exists on the USB flash memory, use the dial or the [+] and [-] buttons to select the file, then skip ahead to step 6.

NOTE

- *Up to 100 user files can be saved to a single USB flash memory.*
- *If the USB flash memory has been write-protected, an appropriate message will appear on the display and you will not be able to execute the operation.*
- *If there is not enough capacity left on the USB flash memory to save the data an appropriate message will appear on the display and you will not be able to save the data. Erase unwanted files from the USB flash memory to make more memory available, or use a different USB flash memory.*

4 Press the [EXECUTE] button. A cursor will appear below the first character in the file name.

5 Change the file name as necessary.

- The [-] button moves the cursor to the left, and the [0] button moves it to the right.
- Use the dial to select a character for the current cursor location.
- The [+] button deletes the character at the cursor location.

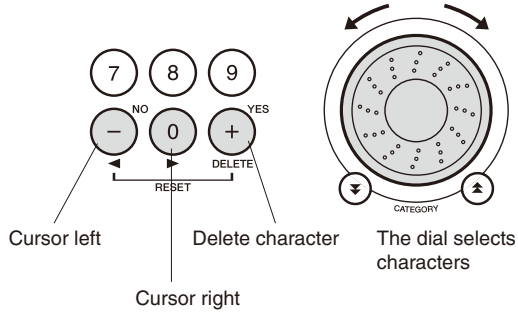

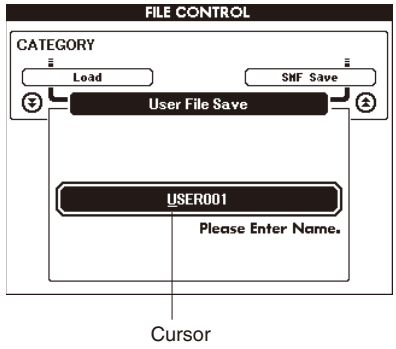

6 Press the [EXECUTE] button. The display prompts you for confirmation.

You can cancel the save operation at this point by pressing the [-] button.

7 Press the [EXECUTE] button again, or the [+] button, and the save operation will begin.

The user song will be stored to the USER FILE folder in the USB flash memory.

⚠ CAUTION

- ***Once the save-in-progress message appears on the display the operation cannot be canceled. Never turn off the power or remove the USB flash memory during this operation.***

8 A message will appear on the display to inform you that the operation has finished.

Press the [EXIT] button to return to the MAIN display.

NOTE

- *If an existing filename is specified the display prompts you for confirmation. Press [EXECUTE] or [+] if it is OK to overwrite the file, or [-] to cancel.*
- *The amount of time it will take to perform the save operation will depend on the condition of the USB flash memory.*

Loading User Files and Style Files

User files, style files, and styles residing on a USB flash memory can be loaded into the instrument. The style file will be loaded into style number 161. If the required style file has already been transferred to the instrument from a computer using the Musicsoft Downloader application, start from step 2, below.

⚠ CAUTION

- *If you load a User File user song (031–035), style file, and registration memory data will be overwritten by the newly loaded data. If you only load a style file, only the style file will be overwritten. Save important data to a USB flash memory before loading data that will overwrite it.*

1 With the USB flash memory containing the file you want to load connected to the USB TO DEVICE connector, check that the File Control icon is shown in the MAIN display.



2 Press the FILE CONTROL [MENU] button.

3 Use the CATEGORY [▲▲] and [▼▼] buttons to locate the Load item.

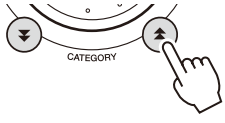

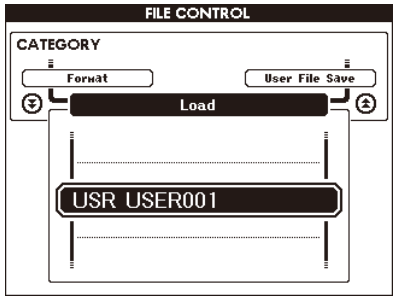

4 Use the dial to select the user file or style file you want to load.

All user files in the USB flash memory will be displayed first, followed by the style files.

NOTE

- *Style files must be located in the root directory. Style files located within folders will not be recognized.*

5 Press the [EXECUTE] button. The display prompts you for confirmation.

You can cancel the load operation at this point by pressing the [-] button.

6 Press the [EXECUTE] button again, or the [+] button, and the load operation will begin.

⚠ CAUTION

- *Once the load-in-progress message appears on the display the operation cannot be canceled. Never turn off the power or remove the USB flash memory during this operation.*

7 A message will appear on the display to inform you that the operation has finished.

Press the [EXIT] button to return to the MAIN display.

MIDI IMPLEMENTATION CHART

YAMAHA [Portable Grand] Date:10-OCT-2007
Model DGX-530/YPG-535 MIDI Implementation Chart Version:1.0

Function...		Transmitted		Recognized	Remarks
Basic	Default	1 - 16		1 - 16	
Channel	Changed	x		x	
	Default	3		3	
Mode	Messages	x		x	
	Altered	**********		x	
Note		0 - 127		0 - 127	
Number :	True voice	**********		0 - 127	
Velocity	Note ON	o 9nH,v=1-127		o 9nH,v=1-127	
	Note OFF	x 9nH,v=0		x	
After	Key's	x		x	
Touch	Ch's	x		x	
Pitch Bend		o 0-24 semi		o 0-24 semi	
	0,32	o		o	Bank Select
	1,11,84	x	*1	o	
	6,38	o		o	Data Entry
	7,10	o		o	
Control	64	o		o	Sustain
	71	x	*1	o	Harmonic Content
Change	72	o		o	Release Time
	73	x	*1	o	Attack Time
	74	x	*1	o	Brightness
	91,93	o		o	Effect Depth
	96-97	x	*1	o	RPN Inc,Dec
	100-101	o		o	RPN LSB,MSB
Prog		o 0 - 127		o 0 - 127	
Change :	True #	**********			
System Exclusive		o		o	
	: Song Pos.	x		x	
Common	: Song Sel.	x		x	
	: Tune	x		x	
System	: Clock	o		o	
Real Time:	Commands	o		o	
Aux	:All Sound OFF	x		o(120,126,127)	
	:Reset All Cntrls	x		o(121)	
	:Local ON/OFF	x		o(122)	
	:All Notes OFF	x		o(123-125)	
Mes-	:Active Sense	o		o	
sages:	Reset	x		x	

*1 Messages for these control change numbers cannot be transmitted from the instrument itself. However, they may be transmitted when playing the accompaniment, song or using the Harmony effect.

Mode 1 : OMNI ON , POLY Mode 2 : OMNI ON ,MONO o : Yes
Mode 3 : OMNI OFF, POLY Mode 4 : OMNI OFF,MONO x : No

MIDI DATA FORMAT

■ Effect map

* When a Type LSB value is received that corresponds to no effect type, a value corresponding to the effect type (coming the closest to the specified value) is automatically set.
* The numbers in parentheses in front of the Effect Type names correspond to the number indicated in the display.

●REVERB

TYPE MSB	TYPE LSB								
	00	01	02	08	16	17	18	19	20
000	No Effect								
001	(01)Hall1				(02)Hall2	(03)Hall3			
002	Room					(04)Room1		(05)Room2	
003	Stage				(06)Stage1	(07)Stage2			
004	Plate				(08)Plate1	(09)Plate2			
005...127	No Effect								

●CHORUS

TYPE MSB	TYPE LSB								
	00	01	02	08	16	17	18	19	20
000...063	No Effect								
064	Thru								
065	Chorus		(02)Chorus2						
066	Celeste					(01)Chorus1			
067	Flanger			(03)Flanger1		(04)Flanger2			
068...127	No Effect								

DIGITAL KEYBOARD *PortableGrand*

DGX-530/YPG-535

PARTS LIST

■ CONTENTS

OVERALL ASSEMBLY 2
STAND ASSEMBLY 5
LOWER CASE ASSEMBLY 6
KEYBOARD ASSEMBLY 8
ELECTRICAL PARTS 10–16

Notes : DESTINATION ABBREVIATIONS

A : Australian model	M : South African model
B : British model	O : Chinese model
C : Canadian model	Q : South-east Asia model
D : German model	T : Taiwan model
E : European model	U : U.S.A. model
F : French model	V : General export model (110V)
H : North European model	W: General export model (220V)
I : Indonesian model	N,X: General export model
J : Japanese model	Y : Export model
K : Korean model	

■ WARNING

Components having special characteristics are marked ⚠ and must be replaced with parts having specification equal to those originally installed.

- The numbers “QTY” show quantities for each unit.
- The parts with “--” in “PART NO.” are not available as spare parts.
- This mark “ } ” in the REMARKS column means these parts are interchangeable.
- The second letter of the shaded ( ) part number is O, not zero.
- The second letter of the shaded ( ) part number is I, not one.

OVERALL ASSEMBLY

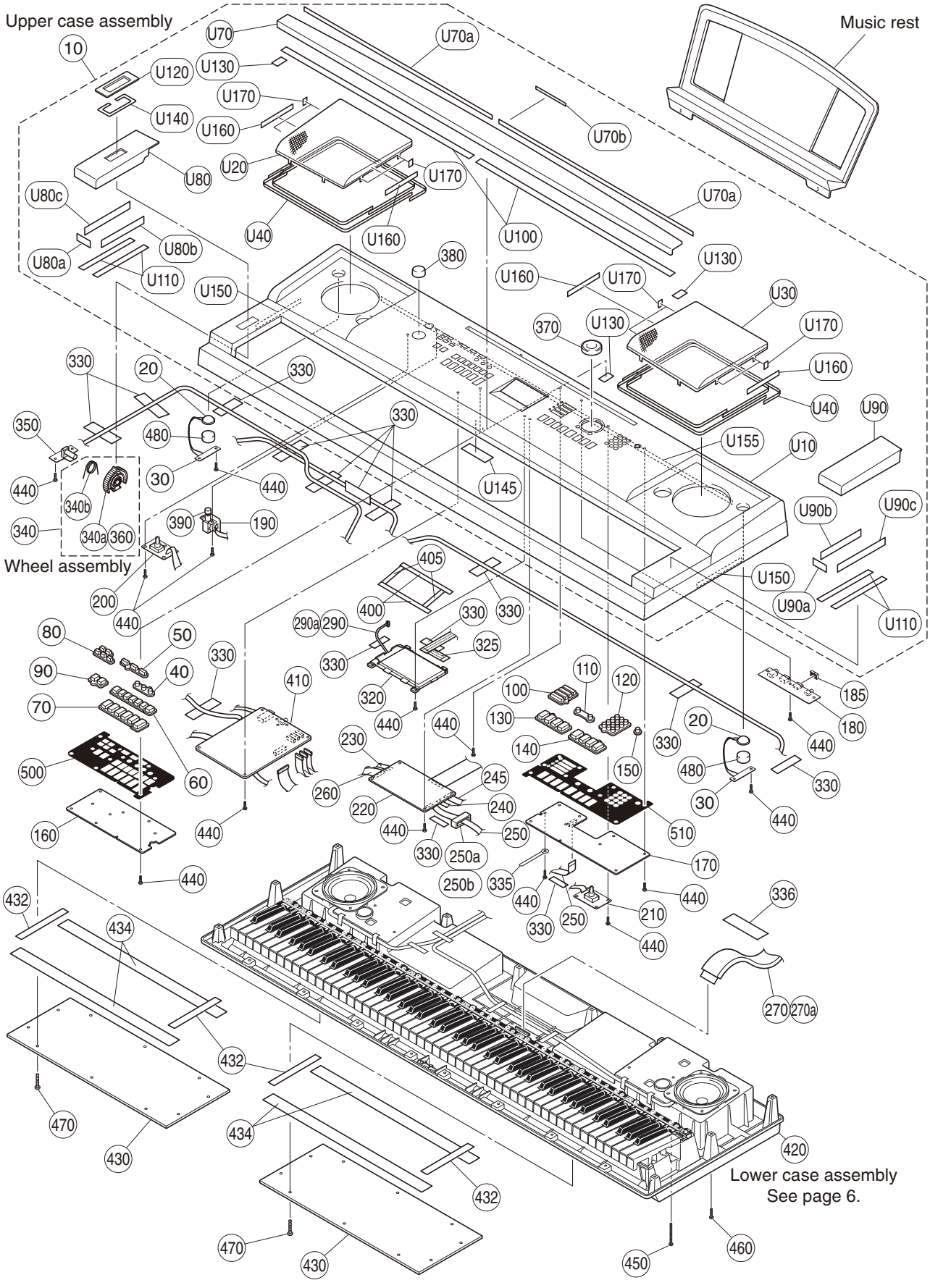

	REF NO.	PART NO.	DESCRIPTION		部品名	REMARKS	QTY	RANK
			OVERALL ASSEMBLY		総組立	DGX-530/YPG-535		
		--	Overall Assembly		総組立	DGX-530U,C,E,B,Y (WM36610)		
		--	Overall Assembly		総組立	YPG-535 U,C,E,B (WM36620)		
*	10	**WM429400**	Upper Case Assembly		上ケースAss'y	DGX-530		
*	10	**WM429500**	Upper Case Assembly		上ケースAss'y	YPG-535		
	20	**X0159A00**	Speaker	3.0cm	スピーカ	TWEETER	2	01
*	30	**WN146400**	Circuit Board	TW	TWシート		2	
	40	**WF834800**	Panel Switch White	x3	PNスイッチ	LESSON(L,R,START)		01
	50	**WF834900**	Panel Switch White	x3	PNスイッチ	P.A.T. ON/OFF,FUNCTION, MUSIC DATABASE		01
*	60	**WM460100**	Panel Switch Black/White	x7	PNスイッチ印刷品	SONG MEMORY(REC,1-5,A)		
	70	**WF835100**	Panel Switch White	x6	PNスイッチ	SONG/STYLE(REPEAT&LEARN, A-B REPEAT,REW,FF,PAUSE, START/STOP)		03
	80	**WF835200**	Panel Switch White	x5	PNスイッチ	MENU,EXECUTE,LYRICS,		02
*	90	**WM459500**	Panel Switch Dark Gray	x2	PNスイッチ	SCORE,CHORD FINGERING METRONOME ON/OFF, TEMPO/TAP		
	100	**WG287500**	Panel Switch White/Gray	x4	PNスイッチ印刷品	SONG,EASY SONG ARRANGER, STYLE,VOICE		03
	110	**WG287700**	Panel Switch White/Gray	x2	PNスイッチ印刷品	CATEGORY(▲,▼)		01
	120	**WG287100**	Panel Switch White/Gray	x12	PNスイッチ印刷品	1-9,-/NO,0,+/YES		03
	130	**WG287800**	Panel Switch White	x4	PNスイッチ印刷品	EXIT,REGIST MEMORY/BANK, 1,2		03
*	140	**WM460000**	Panel Switch Black/White	x4	PNスイッチ	PORTABLE GRAND, SPLIT ON/OFF,DUAL ON/OFF, HARMONY ON/OFF		
	150	**WG283500**	Panel Switch Black	x1	PNスイッチ	DEMO		01
*	160	**WN429200**	Circuit Board	PNL	PNLシート			
*	170	**WN429300**	Circuit Board	PNR	PNRシート			
*	180	**WN145900**	Circuit Board	DJACK	DJACKシート			
	185	--	Nonwoven Fabric Cloth	125X2.5X0.5	不織布	(WP54360)		
*	190	**WN146100**	Circuit Board	PSW	PSWシート			
*	200	**WN146200**	Circuit Board	MVR	MVRシート			
*	210	**WN146300**	Circuit Board	ENC	ENCシート			
*	220	**WM367100**	Circuit Board	DM	DMシート			
	230	**WG317600**	Cable	20624 BNCD-P=1.0-K	カード電線			01
*	240	**WN827800**	FFC Cable	5P 120mm P=1.0 SLD	FFCケーブル			
*	245	**WN827900**	FFC Cable	12P 120mm P=1.0 SLD	FFCケーブル			
*	250	**WH413600**	Cable Assembly 3	20624 BNCD-P=1.0-K	カード電線Ass'y 3	with Sponge		
*	250a	**WH376400**	Ferrite Core	FSRC222090RX000T	フェライトコア			
	250b	--	Vibration-proof Sponge	12	防振スポンジ12	(WH41370)	2	
	260	**WG317900**	Cable	20624 BNCD-P=1.0-K	カード電線			01
*	270	**WG318300**	Cable Assembly 2	20624 BNCD-P=1.0-K	カード電線Ass'y 2	with Sponge		
	270a	--	Vibration-proof Sponge	11	防振スポンジ11	(WG46990)	2	
	290	**WB092100**	Connector Assembly	BL 2P P=2.0	BL束線			01
	290a	--	Vibration-proof Sponge	1	防振スポンジ1	(WB09780)	2	
*	320	**WN744800**	LCD Unit		液晶ユニット			
	325	--	Vibration-proof Sponge		防振スポンジ	(WH21970)		
	330	**VA126100**	Adhesive Tape	12X50	粘着テープ		14	01
	330	--	Adhesive Tape	MY7# 12X50	PETテープ	(WB79380)	14	
	335	**CB817510**	Cord Binder	S-14B-E,S-14	束線止め			03
	336	--	Adhesive Tape	MY7# 12X70	PETテープ	(WB79390)		
	340	**VY793100**	Wheel Assembly		ホイールAss'y			04
	340a	**VY750800**	Wheel		ホイール	PITCH BEND		03
	340b	**VT440100**	Spring		ホイールバネ			03
*	350	**WN146000**	Circuit Board	PB	PBシート			
	360	**TX920280**	Grease	G-31KA 50g	グリス	(VE96850)		10
	370	**WG455700**	Encoder Knob Black		エンコーダツマミ	DATA ENTRY		01
	380	**VU432400**	Knob Black		ツマミ	MASTER VOLUME		01
	390	**V7151200**	Push Knob Black		プッシュツマミクロ	■STANDBY/▬ON		01
	400	--	Cushion	PE 80X8X2	クッション(PE)	(WH39010)	2	
	405	--	Cushion	PE 125X8X2	クッション(PE)	(WH39020)	2	
*	410	**WN145800**	Circuit Board	AM	AMシート			
	420	--	Lower Case Assembly		下ケースAss'y	(WM43010)		
*	430	**WN630800**	Bottom Board		底板		2	
	432	--	Cushion	PE 461X35X1	クッション(PE)	(WH22020)	4	
	434	--	Cushion	PE 118.5X15X1	クッション(PE)	(WH22000)	4	
	440	**WE774300**	Bind Head Tapping Screw-B	3.0X8 MFZN2W3	Bタイト十BIND		55	01
	450	**WF491000**	Bind Head Tapping Screw-B	3.0X30 MFZN2W3	Bタイト十BIND		8	01

*: New Parts

RANK: Japan only

	REF NO.	PART NO.	DESCRIPTION		部品名	REMARKS	QTY	RANK
	460	**WE987400**	Bind Head Tapping Screw-B	3.0X12 MFZN2W3	Ｂタイト十ＢＩＮＤ		24	01
	470	**WF154100**	Bind Head Tapping Screw-B	4.0X16 MFZN2W3	Ｂタイト十ＢＩＮＤ		20	01
	480	**WD365700**	Sponge	27	スポンジ		2	01
	500	**--**	Vibration-proof Sheet L	LEFT	防振シートＬ	(WG30110)		
	510	**--**	Vibration-proof Sheet R	RIGHT	防振シートＲ	(WG30120)		
*		**WM429400**	Upper Case Assembly		上ケースＡｓｓ’ｙ	DGX-530		
*		**WM429500**	Upper Case Assembly		上ケースＡｓｓ’ｙ	YPG-535		
	U10	**--**	Upper Case		上ケース塗装印刷品	DGX-530 (WM42920)		
	U10	**--**	Upper Case		上ケース塗装印刷品	YPG-535 (WM42930)		
	U20	**WG337100**	Speaker Grille L	LEFT	ＳＰグリルＬ塗装品			07
	U30	**WG337200**	Speaker Grille R	RIGHT	ＳＰグリルＲ塗装品			07
	U40	**WH198300**	Nonwoven Fabric Cloth	460X6X0.35	不織布ＳＰ－ＧＲＩＬ		8	01
*	U70	**WM863400**	Keyboard Holder Assembly		鍵盤押さえＡｓｓ’ｙ			
	U70a	**--**	Nonwoven Fabric Cloth	0.35 BLACK	不織布Ｆ ＰＡＮＥＬ	(WG33830)	2	
	U70b	**--**	Edge Sticker		化粧シール	(WH18170)		
	U80	**WG337600**	Key Block L Assembly	LEFT	拍子木Ｌ Ａｓｓ’ｙ			01
	U80a	**--**	Nonwoven Fabric Cloth	0.35 BLACK	不織布ＫＥＹ．ＢＬ	(WG33850)		
	U80b	**--**	Nonwoven Fabric Cloth	0.35 BLACK	不織布ＫＥＹ．ＢＬ	(WG33840)		
	U80c	**--**	Cushion	PE 163X20X2	クッション（ＰＥ）	(WH39000)		
	U90	**WG337700**	Key Block R Assembly	RIGHT	拍子木Ｒ Ａｓｓ’ｙ			01
	U90a	**--**	Nonwoven Fabric Cloth	0.35 BLACK	不織布ＫＥＹ．ＢＬ	(WG33850)		
	U90b	**--**	Nonwoven Fabric Cloth	0.35 BLACK	不織布ＫＥＹ．ＢＬ	(WG33840)		
	U90c	**--**	Cushion	PE 163X20X2	クッション（ＰＥ）	(WH39000)		
	U100	**WG337900**	Adhesive Tape	#500 24X580	両面粘着テープ		2	02
	U110	**WG337800**	Adhesive Tape	#500 12X150	両面粘着テープ		4	01
	U120	**--**	PB Escutcheon Assembly		ＰＢエスカ Ａｓｓ’ｙ	(WG33280)		
	U130	**--**	Edge Cloth	30X10X0.35	エッジクロス	(WH19840)	3	
	U140	**--**	Edge Cloth	56X4X0.35	エッジクロス	(WH21980)		
	U145	**--**	Nonwoven Fabric Cloth	0.35 BLACK	不織布ＫＥＹ．ＢＬ	(WG33850)		
	U150	**--**	Cushion	PE 180X10X1	クッション（ＰＥ）	(WH38990)	2	
	U155	**--**	Cushion	PE 1200X10X1	クッション（ＰＥ）	(WH70440)		
	U160	**--**	Cushion	PE 115X13X1	クッション（ＰＥ）	(WH44420)	4	
	U170	**--**	Edge Cloth	30X20X0.35	エッジクロス	(WH19840)	8	
			ACCESSORIES		付属品			
		WG073800	Music Rest		譜面板			
*		**X9318A00**	CD-ROM		ＣＤ－ＲＯＭ			
		--	Foot Pedal	FC-5	フットペダル	(VJ07000)		
⚠		**WK014700**	AC Adaptor	PA-150U U	ＡＣアダプター	U,C		08
⚠		**V8029200**	AC Adaptor	PA-5D E	ＡＣアダプター	E		08
⚠		**V8029300**	AC Adaptor	PA-5D GBR	ＡＣアダプター	B		09
		--	Stand Assembly		スタンドＡｓｓ’ｙ			

*: New Parts

RANK: Japan only

STAND ASSEMBLY

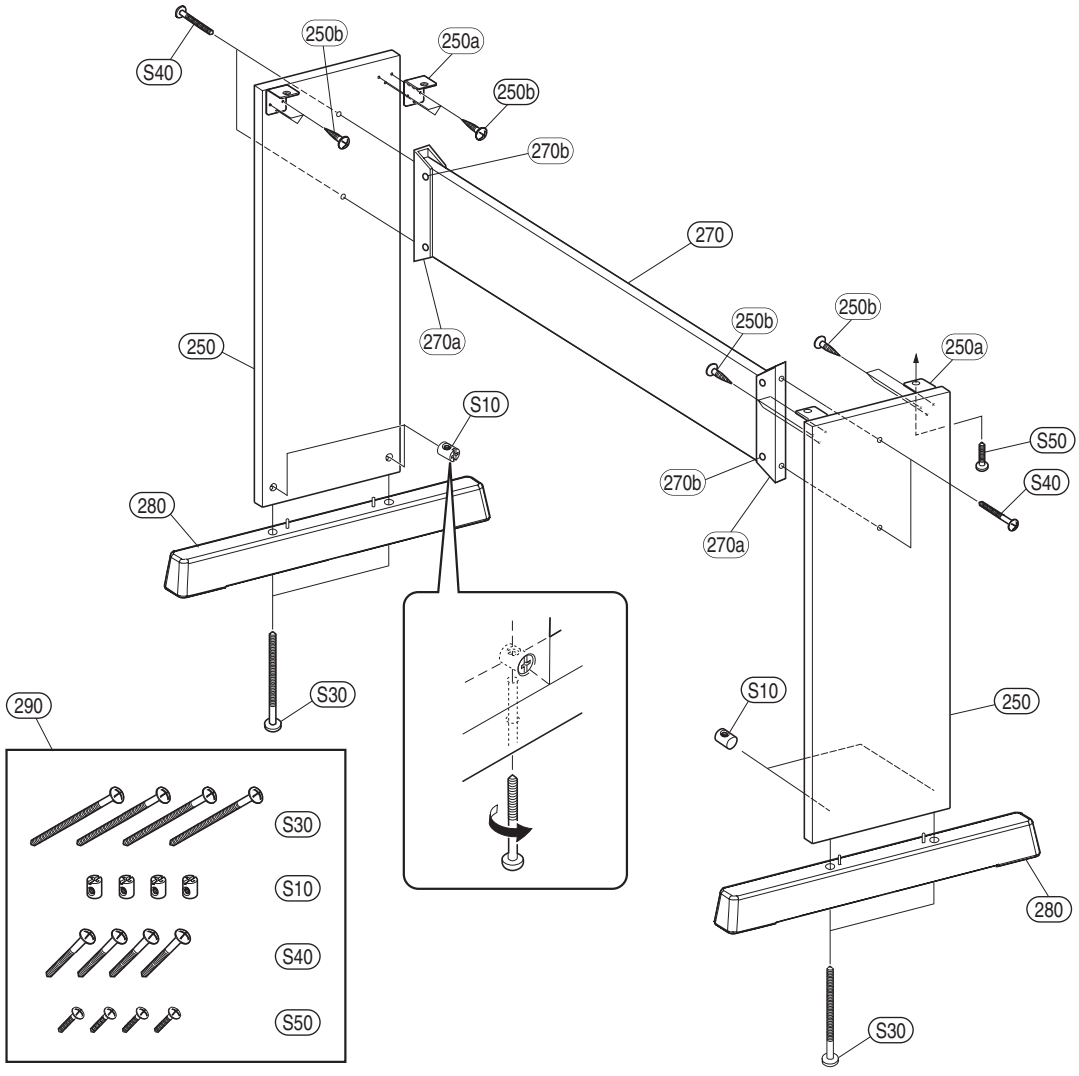

REF NO.	PART NO.	DESCRIPTION		部品名	REMARKS	QTY	RANK
		STAND ASSEMBLY		スタンドAss'y	DGX-530/YPG-535		
	--	Stand Assembly		スタンドAss'y			
250	**WG397400**	Side Board Assembly		側板 Ass'y		2	11
250a	**V8390100**	Angle Bracket, ST	2.0 L MFZN2B	S T. アングル		4	02
250b	**WE970700**	Bind Head Tapping Screw-1	3.5X16 MFZN2W3	TP#1十BIND		12	01
270	**WG398600**	Stand Rail Assembly		框 Ass'y			13
270a	**WA694800**	Angle Bracket		框補強金具		2	04
270b	**WE970700**	Bind Head Tapping Screw-1	3.5X16 MFZN2W3	TP#1十BIND		8	01
280	**WG350400**	Stand Base		妻土台袋入		2	04
* 290	**WN055000**	Screw Set		ネジセット			
*	**WN055000**	Screw Set		ネジセット			
S10	**WF559100**	Special Nut	6.0X13	ナット特殊		4	01
S30	**WF492300**	Truss Head Screw	6.0X70 MFZN2B3	特注ネジ十TRUS		4	01
S40	**WH287000**	Truss Head Screw	6.0X30 MFZN2B3	特注ネジ十TRUS		4	01
S50	**WF492400**	Truss Head Screw	5.0X16 MFZN2W3	小ネジ十TRUS		4	01

*: New Parts

RANK: Japan only

LOWER CASE ASSEMBLY

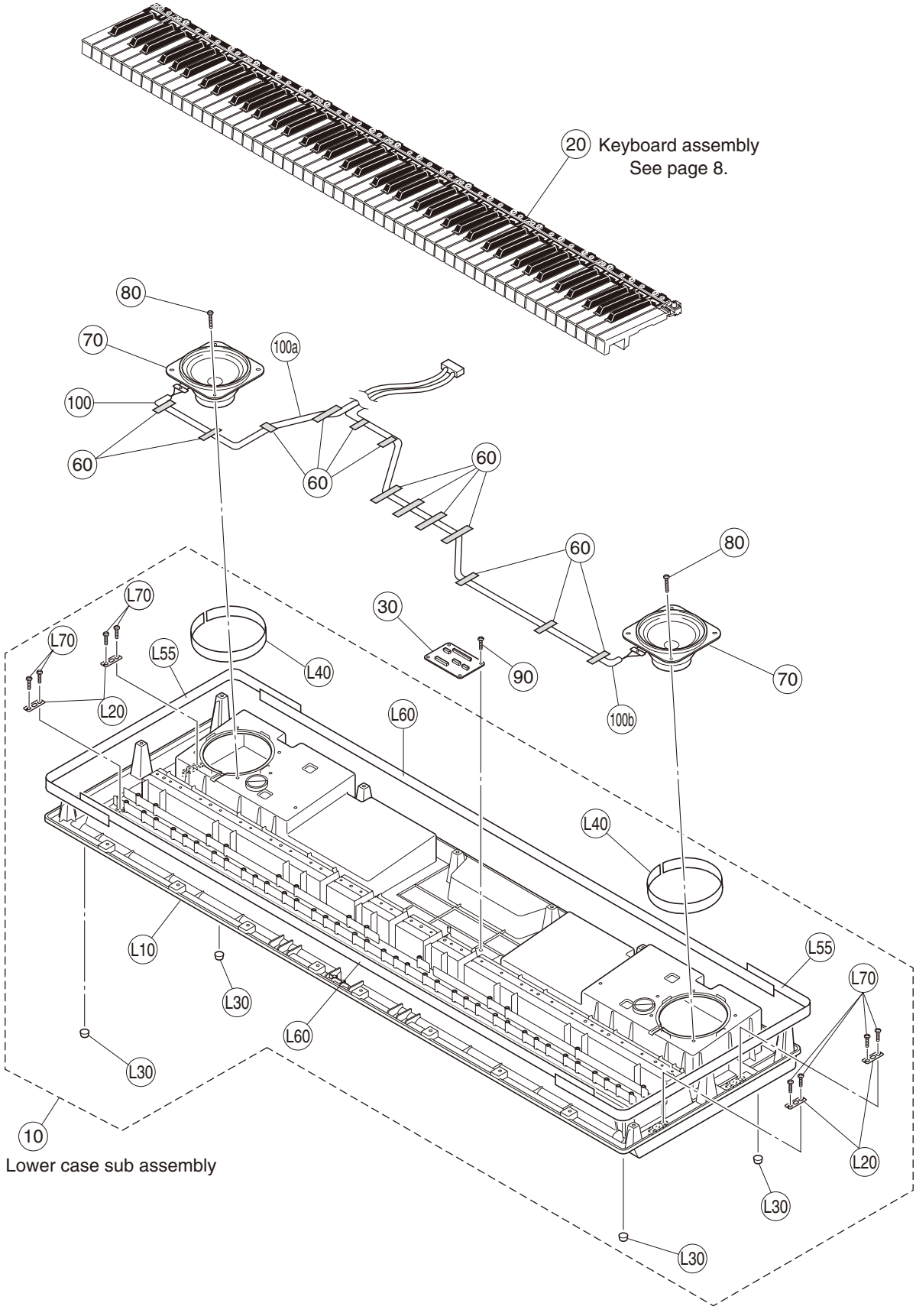

REF NO.	PART NO.	DESCRIPTION		部品名	REMARKS	QTY	RANK
		LOWER CASE ASSEMBLY		下ケースＡｓｓ’ｙ	DGX-530/YPG-535		
	--	Lower Case Assembly		下ケースＡｓｓ’ｙ	(WM43010)		
10	**WF839900**	Lower Case Sub Assembly		下ケースサブＡｓｓ’ｙ			15
20	--	Keyboard Assembly	16N-P A88 P2M I	１６Ｎ－Ａ８８鍵盤	(WM43080)		
30	**WG200800**	Circuit Board	RELAY	ＲＥＬＡＹシート			04
60	**VA126100**	Adhesive Tape	12X50	粘着テープ		13	01
60	--	Adhesive Tape	MY7# 12X50	ＰＥＴテープ	(WB79380)	13	
70	**X7430A00**	Speaker	12.0cm 4 ohm 10W	スピーカー	WOOFER	2	07
80	**WE981200**	Bind Head Tapping Screw-B	4.0X12 MFZN2W3	Ｂタイト十ＢＩＮＤ		8	01
90	**WE774300**	Bind Head Tapping Screw-B	3.0X8 MFZN2W3	Ｂタイト十ＢＩＮＤ		4	01
100	**WG458700**	Connector Assembly	SP1 XH 4P	ＳＰ１束線Ａｓｓ’ｙ			
100a	--	Vibration-proof Sponge	5	防振スポンジ５	(WG45990)	2	
100b	--	Vibration-proof Sponge	6	防振スポンジ６	(WG46000)	2	
	WF839900	Lower Case Sub Assembly		下ケースサブＡｓｓ’ｙ			15
L10	--	Lower Case		下ケース成型品	(WF83430)		
L20	**VI104400**	Holder		脚取り付け金具天津製		4	
L30	**CB043750**	Foot	T1.6	ゴム脚		5	01
L40	--	Seal Tape	SP 395X8X1	シールテープＳＰ	(WG31740)	2	
L55	--	Cushion	PE 700X20X1	クッション（ＰＥ）	(WH19450)	2	
L60	--	Cushion	PE 1200X20X2	クッション（ＰＥ）	(WH19440)	2	
L70	**WE774300**	Bind Head Tapping Screw-B	3.0X8 MFZN2W3	Ｂタイト十ＢＩＮＤ		8	01

✻: New Parts

RANK: Japan only

KEYBOARD ASSEMBLY

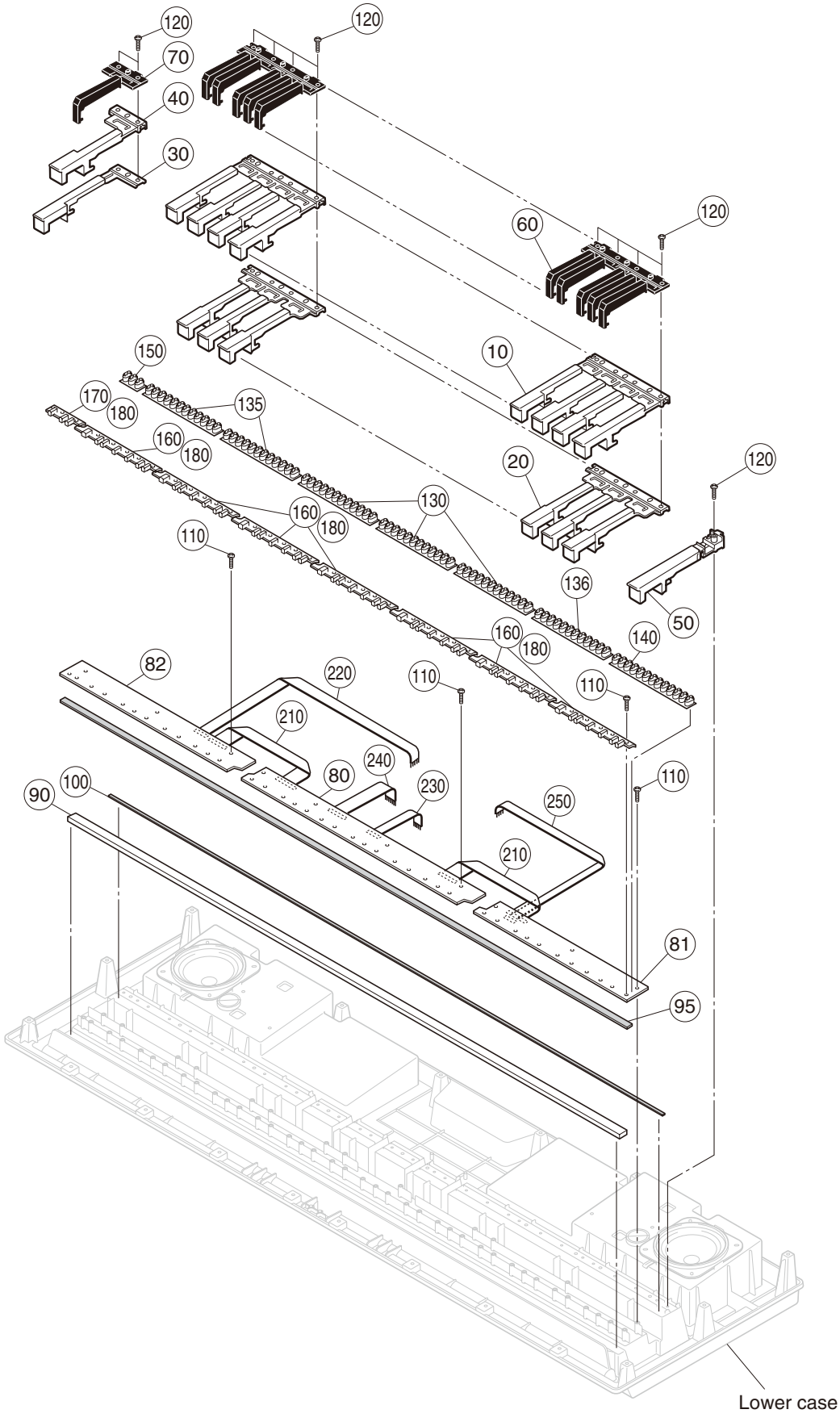

	REF NO.	PART NO.	DESCRIPTION		部品名	REMARKS	QTY	RANK
			KEYBOARD ASSEMBLY		１６Ｎ－Ａ８８鍵盤	DGX-530/YPG-535		
		--	Keyboard Assembly	16N-P A88 P2M I	１６Ｎ－Ａ８８鍵盤	(WM43080)		
	10	V7380300	White Key	16N-P CEGB-P	白鍵ＣＥＧＢ－Ｐ		7	02
	20	V7380400	White Key	16N-P DFA-P	白鍵ＤＦＡ－Ｐ		7	02
	30	V7380500	White Key	16N-P A-P	白鍵Ａ－Ｐ			01
	40	V7380600	White Key	16N-P B-P	白鍵Ｂ－Ｐ			01
	50	V7380700	White Key	16N-P C-P	白鍵Ｃ－Ｐ			01
	60	VZ271700	Black Key	16N	黒鍵		7	06
	70	V7380800	Black Key	16N A#	黒鍵Ａ＃			02
	80	V7639100	Circuit Board	MK-88C	シート８８Ｃ			08
	81	V7639000	Circuit Board	MK-88H	シート８８Ｈ			08
	82	V7639200	Circuit Board	MK-88L	シート８８Ｌ			08
	90	V7638500	Felt L White	88L 1210X11X3.5T	フェルト８８Ｌ			03
	95	V7638400	Stopper	88U 1194X5X3.5T	ストッパー８８Ｕ			04
	100	WG845600	Rubber Sheet		クッションシート			01
	110	WE774200	Bind Head Tapping Screw-B	3.0X10 MFZN2W3	Ｂタイト＋ＢＩＮＤ		40	01
	120	WF492000	Bind Head Tapping Screw-P	3.0X20 MFZN2W3	Ｐタイト＋ＢＩＮＤ		31	01
	130	V3413600	Rubber Contact	16N-2M OCT 2M	接点ゴム１６Ｎ２Ｍ	C2-B2,C3-B3,C4-B4	3	04
	135	WJ231100	Rubber Contact	16N-2M OCT 2M-55	接点ゴム１６Ｎ２Ｍ	C0-B0,C1-B1	2	04
	136	WJ231200	Rubber Contact	16N-2M OCT 2M-45	接点ゴム１６Ｎ２Ｍ	C5-B5		04
*	140	WM934500	Rubber Contact	16N-2M 13K 2M-45	接点ゴム１６Ｎ２Ｍ	C6-C7		
*	150	WM934400	Rubber Contact	16N-2M 88L 2M-55	接点ゴム１６Ｎ２Ｍ	A-1-B-1		
	160	V7380900	Key Guide	16N	キーガイド		7	
	170	V7643200	Key Guide	16N 88L	キーガイド８８Ｌ			
	180	--	Grease	G-1006Y	グリス	(V627430)		
	210	--	Connector Assembly	MK 16N-2M-A88	ケーブルＭＫ中継	(V763930)	2	
	220	--	Connector Assembly	88L 16N-2M-A88	ケーブル８８Ｌ Ａｓｓ’ｙ	with Sponge (WH62650)		
	230	--	Connector Assembly	88C-B 16N-2M-A88	ケーブル８８Ｃ－Ｂ Ａｓｓ’ｙ	with Sponge (WH62660)		
	240	--	Connector Assembly	88C-N 16N-2M-A88	ケーブル８８Ｃ－Ｎ Ａｓｓ’ｙ	with Sponge (WH62670)		
	250	--	Connector Assembly	88H 16N-2M-A88	ケーブル８８Ｈ Ａｓｓ’ｙ	with Sponge (WH62640)		

*: New Parts

RANK: Japan only

■ ELECTRICAL PARTS

AM/DJACK/ENC/MVR/PB/PSW/TW

	REF NO.	PART NO.	DESCRIPTION		部品名	REMARKS	QTY	RANK
			ELECTRICAL PARTS		電気部品	DGX-530/YPG-535		
*		**WN145800**	Circuit Board	AM	AMシート	(WK92550)(X9121D0)		
*		**WN145900**	Circuit Board	DJACK	DJACKシート	(WK92550)(X9121D0)		
*		**WN146300**	Circuit Board	ENC	ENCシート	(WK92550)(X9121D0)		
*		**WN146200**	Circuit Board	MVR	MVRシート	(WK92550)(X9121D0)		
*		**WN146000**	Circuit Board	PB	PBシート	(WK92550)(X9121D0)		
*		**WN146100**	Circuit Board	PSW	PSWシート	(WK92550)(X9121D0)		
*		**WN146400**	Circuit Board	TW	TWシート	(WK92550)(X9121D0)		
*		**WM367100**	Circuit Board	DM	DMシート	(WM36720)(X9734B0)		
		V7639100	Circuit Board	MK-88C	シート88C	(V763880)(X0001A0)		08
		V7639000	Circuit Board	MK-88H	シート88H	(V763870)(X0000A0)		08
		V7639200	Circuit Board	MK-88L	シート88L	(V763890)(X0002A0)		08
*		**WN429200**	Circuit Board	PNL	PNLシート	(WN42910)(X7137D0)		
*		**WN429300**	Circuit Board	PNR	PNRシート	(WN42910)(X7137D0)		
		WG200800	Circuit Board	RELAY	RELAYシート	(WG20090)(X7138C0)		04
*		**WN145800**	Circuit Board	AM	AMシート	(WK92550)(X9121D0)		
*		**WN145900**	Circuit Board	DJACK	DJACKシート	(WK92550)(X9121D0)		
*		**WN146300**	Circuit Board	ENC	ENCシート	(WK92550)(X9121D0)		
*		**WN146200**	Circuit Board	MVR	MVRシート	(WK92550)(X9121D0)		
*		**WN146000**	Circuit Board	PB	PBシート	(WK92550)(X9121D0)		
*		**WN146100**	Circuit Board	PSW	PSWシート	(WK92550)(X9121D0)		
*		**WN146400**	Circuit Board	TW	TWシート	(WK92550)(X9121D0)		
		--	Jumper Wire	0.55	ジャンパー線	(VA07890)		
	10	**WE774300**	Bind Head Tapping Screw-B	3.0X8 MFZN2W3	Bタイト＋BIND		4	01
	20	**--**	Silicon Grease	G-746	シリコングリス	(0412125)		
	20	**--**	Silicon Grease	X-113A G746	シリコングリス	(VA79810)		
	30	**--**	Nonwoven Fabric Cloth	35X4X0.35	不織布	(V472450)	2	
	40	**--**	Nonwoven Fabric Cloth	50X3X0.35	不織布	(WH21960)	2	
	C101	**UA354470**	Mylar Capacitor	0.0470 50V J RX TP	マイラーコン			
	C101	**UA654470**	Mylar Capacitor	0.0470 50V J RX TP	マイラーコン			01
	C102	**UA354470**	Mylar Capacitor	0.0470 50V J RX TP	マイラーコン			
	C102	**UA654470**	Mylar Capacitor	0.0470 50V J RX TP	マイラーコン			01
	C103	**V3773200**	Electrolytic Cap.	6800.0 25.0V FORM.	ケミコン			
	C103	**UR749680**	Electrolytic Cap.	6800 25.0V FORM.	ケミコン			03
	C104	**UR867100**	Electrolytic Cap.	10.00 50.0V RX TP	ケミコン			01
	C104	**V3512300**	Electrolytic Cap.	10.00 50.0V TP	ケミコン			
	C105	**UR867100**	Electrolytic Cap.	10.00 50.0V RX TP	ケミコン			01
	C105	**V3512300**	Electrolytic Cap.	10.00 50.0V TP	ケミコン			
	C106	**VC694800**	Semiconductive Cera. Cap.	0.1000 25V Z TATET	半導体セラコン			01
	-109	**VC694800**	Semiconductive Cera. Cap.	0.1000 25V Z TATET	半導体セラコン			01
	C106	**VM902400**	Semiconductive Cera. Cap.	0.1000 25V Z FORM.	半導体セラコン 天津製			01
	-109	**VM902400**	Semiconductive Cera. Cap.	0.1000 25V Z FORM.	半導体セラコン 天津製			01
	C110	**WF405000**	Electrolytic Cap.	100.00 10.0V TATET	ケミコン			
	C110	**WF448900**	Electrolytic Cap.	100.00 10.0V TATET	ケミコン			
	C111	**WF405000**	Electrolytic Cap.	100.00 10.0V TATET	ケミコン			
	C111	**WF448900**	Electrolytic Cap.	100.00 10.0V TATET	ケミコン			
	C201	**FG613100**	Ceramic Capacitor-B	1000P 50V K RX TP	セラコン（B）			01
	C201	**VR026200**	Ceramic Capacitor-2B	1000P 63V K FORM.	セラコン2B 天津製			
	C202	**FG613100**	Ceramic Capacitor-B	1000P 50V K RX TP	セラコン（B）			01
	C202	**VR026200**	Ceramic Capacitor-2B	1000P 63V K FORM.	セラコン2B 天津製			
	C203	**V5515100**	Mylar Capacitor	0.0560 50V J	マイラーコン			
	C203	**VE325700**	Monolithic Mylar Capacitor	0.056 50V J RX TP	積層マイラーコン			
	C204	**V5515100**	Mylar Capacitor	0.0560 50V J	マイラーコン			
	C204	**VE325700**	Monolithic Mylar Capacitor	0.056 50V J RX TP	積層マイラーコン			
	C207	**UR838100**	Electrolytic Cap.	100.00 16.0V RX TP	ケミコン			01
	C207	**V3508500**	Electrolytic Cap.	100.00 16.0V TP	ケミコン			
	C208	**UR866100**	Electrolytic Cap.	1.00 50.0V RX TP	ケミコン			01
	C208	**V3511900**	Electrolytic Cap.	1.00 50.0V TP	ケミコン			
	C209	**UR867100**	Electrolytic Cap.	10.00 50.0V RX TP	ケミコン			01
	C209	**V3512300**	Electrolytic Cap.	10.00 50.0V TP	ケミコン			
	C210	**VC694800**	Semiconductive Cera. Cap.	0.1000 25V Z TATET	半導体セラコン			01
	C210	**VM902400**	Semiconductive Cera. Cap.	0.1000 25V Z FORM.	半導体セラコン 天津製			01
	C211	**UR867100**	Electrolytic Cap.	10.00 50.0V RX TP	ケミコン			01
	C211	**V3512300**	Electrolytic Cap.	10.00 50.0V TP	ケミコン			
	C212	**UA355100**	Mylar Capacitor	0.1000 50V J RX TP	マイラーコン			01
	-215	**UA355100**	Mylar Capacitor	0.1000 50V J RX TP	マイラーコン			01
	C212	**V5515400**	Mylar Capacitor	0.1000 50V J	マイラーコン			
	-215	**V5515400**	Mylar Capacitor	0.1000 50V J	マイラーコン			
	C212	**VR168300**	Monolithic Mylar Capacitor	ECQ-V1H104JL3	積層マイラーコン			01

*: New Parts

RANK: Japan only

AM/DJACK/ENC/MVR/PB/PSW/TW

REF NO.	PART NO.	DESCRIPTION		部品名	REMARKS	QTY	RANK
-215	**VR168300**	Monolithic Mylar Capacitor	ECQ-V1H104JL3	積層マイラーコン			01
C216	**UR837330**	Electrolytic Cap.	33.00 16.0V RX TP	ケミコン			01
C216	**V3508300**	Electrolytic Cap.	33.00 16.0V TP	ケミコン			
C217	**UR837330**	Electrolytic Cap.	33.00 16.0V RX TP	ケミコン			01
C217	**V3508300**	Electrolytic Cap.	33.00 16.0V TP	ケミコン			
C218	**VC694800**	Semiconductive Cera. Cap.	0.1000 25V Z TATET	半導体セラコン			01
-221	**VC694800**	Semiconductive Cera. Cap.	0.1000 25V Z TATET	半導体セラコン			01
C218	**VM902400**	Semiconductive Cera. Cap.	0.1000 25V Z FORM.	半導体セラコン 天津製			01
-221	**VM902400**	Semiconductive Cera. Cap.	0.1000 25V Z FORM.	半導体セラコン 天津製			01
C401	**VQ175700**	Ceramic Capacitor-2	0.01 63V Z FORMING	セラコン 天津製 2			
-406	**VQ175700**	Ceramic Capacitor-2	0.01 63V Z FORMING	セラコン 天津製 2			
C408	**VQ175700**	Ceramic Capacitor-2	0.01 63V Z FORMING	セラコン 天津製 2			
CN101	**VK024800**	Wire Trap	52147 4P TE	ワイヤートラップ			01
CN102	**VK024600**	Wire Trap	52147 2P TE	ワイヤートラップ			01
CN103	**VK024700**	Wire Trap	52147 3P TE	ワイヤートラップ			01
CN104	**WD369900**	FFC Connector	52806-1910 19P	FFCコネクタ			01
CN201	**VI878000**	Cable Holder	51048 2P TE	ケーブルホルダー			01
CN201	**VY668300**	Cable Holder	51048 2P TE	ケーブルホルダー天津製			
CN202	**VI878000**	Cable Holder	51048 2P TE	ケーブルホルダー			01
CN202	**VY668300**	Cable Holder	51048 2P TE	ケーブルホルダー天津製			
CN203	**LB918040**	Base Post Connector	XH 4P TE	ベースツキポスト			01
CN204	**VK024900**	Wire Trap	52147 5P TE	ワイヤートラップ			01
CN301	**V4928200**	Connector, FFC	52806-1210 12P TE	FFCコネクター			01
CN302	**WA780300**	FFC Connector	52806 5P TE	FFCコネクタ			
CN401	**VI878100**	Cable Holder	51048 3P TE	ケーブルホルダー			01
CN401	**VZ341600**	Cable Holder	51048 3P TE	ケーブルホルダー天津製			
CN501	**VI878200**	Cable Holder	51048 4P TE	ケーブルホルダー			01
CN501	**VY668400**	Cable Holder	51048 4P TE	ケーブルホルダー天津製			
CN601	**VI878300**	Cable Holder	51048 5P TE	ケーブルホルダー			01
CN601	**VZ341700**	Cable Holder	51048 5P TE	ケーブルホルダー天津製			
CN901	**VI878100**	Cable Holder	51048 3P TE	ケーブルホルダー			01
CN901	**VZ341600**	Cable Holder	51048 3P TE	ケーブルホルダー天津製			
⚠ D101	**V8603100**	Diode	2A02G-01 X0 JI	ダイオード			
⚠ D101	**VV731400**	Diode	2A02-05 X0	ダイオード			01
EC901	**VU481300**	Encoder	REB161(9X5)PVB15FH	16形エンコーダ	DATA ENTRY		03
EP1	**--**	GND Wire	L=90	GND束線	(WH67360)		
EP2	**--**	GND Wire	L=40	GND束線	(WH67350)		
⚠ FZ001	**WD158000**	Fuse	TSD 4.00A 250V (P)	ヒューズ			01
HS001	**--**	Heat Sink		放熱板	(WG29940)		
IC101	**X7252A00**	IC	UPC2905AHF-AZ	IC	REGULATOR +5V		
IC101	**XJ607A00**	IC	NJM7805FA	IC			02
IC102	**X5887A00**	IC	BA50BC0T	IC	REGULATOR +5V 1.0A		03
IC201	**XY209A00**	IC	LA4625-E	IC	POWER AMP. 6W+6W		05
J2	**--**	Jumper Wire	0.55	ジャンパー線	(VA07890)		
J5	**--**	Jumper Wire	0.55	ジャンパー線	(VA07890)		
⚠ JK101	**LB302260**	Connector	HEC0470-01-630	電源コネクタ	DC IN 12V		02
⚠ JK101	**V6557600**	Connector	HTJ-020-05AZ	電源コネクタ			04
JK201	**LB101870**	Phone Jack	YKB21-5006	ホーンコネクタ	PHONES/OUTPUT		03
JK201	**VV943300**	Phone Jack	HTJ064-04A	ホーンコネクタ			02
JK301	**VC687500**	Phone Jack Black	YKB21-5014	ホーンコネクタ（黒）	SUSTAIN		01
JK301	**WE245200**	Phone Jack Black	JY-6314-01-020	ホーンコネクタ（黒）			
JK302	**V6802600**	USB Jack	USB 4P SE	USBジャック	USB TO HOST		02
JK302	**V9016000**	USB Connector	YKF45-0021N 4P SE	USBコネクタB			02
JK303	**WA245700**	USB Connector	YKF45 4P SE	USBコネクタ	USB TO DEVICE		02
JK303	**WH382500**	USB Connector	UAR27 4P SE	USBコネクタ			
⚠ L101	**V6795600**	Line Filter	BDL40-01	ラインフィルター			
⚠ L101	**VQ884000**	Line Filter	CM08RB01 RX	ラインフィルター			03
L102	**--**	Jumper Wire	0.55	ジャンパー線	(VA07890)		
L201	**VB835000**	Coil	FL05RD200AT 20uH	コイル20U			01
L201	**VT279200**	Coil	DX001-20UH 20uH	コイル20U 天津製			
L202	**VB835000**	Coil	FL05RD200AT 20uH	コイル20U			01
L202	**VT279200**	Coil	DX001-20UH 20uH	コイル20U 天津製			
L203	**--**	Jumper Wire	0.55	ジャンパー線	(VA07890)		
L204	**GE300670**	Ferrite Bead	BL02RN2R1P1A	フェライトビーズ			02
L301	**VB835000**	Coil	FL05RD200AT 20uH	コイル20U			01
L301	**VT279200**	Coil	DX001-20UH 20uH	コイル20U 天津製			
L302	**VB835000**	Coil	FL05RD200AT 20uH	コイル20U			01
L302	**VT279200**	Coil	DX001-20UH 20uH	コイル20U 天津製			
L304	**VB835000**	Coil	FL05RD200AT 20uH	コイル20U			01
L304	**VT279200**	Coil	DX001-20UH 20uH	コイル20U 天津製			

✻: New Parts

RANK: Japan only

AM/DJACK/ENC/MVR/PB/PSW/TW and DM

REF NO.	PART NO.	DESCRIPTION		部品名	REMARKS	QTY	RANK
L306	**VB835000**	Coil	FL05RD200AT 20uH	コイル 20U			01
L306	**VT279200**	Coil	DX001-20UH 20uH	コイル 20U 天津製			
R101	**HF455100**	Carbon Resistor	100.0 1/4 J AX TP	カーボン抵抗			01
-104	**HF455100**	Carbon Resistor	100.0 1/4 J AX TP	カーボン抵抗			01
R101	**V2548000**	Carbon Resistor	100.0 1/6J 26TP	カーボン抵抗			
-104	**V2548000**	Carbon Resistor	100.0 1/6J 26TP	カーボン抵抗			
R201	**HF456390**	Carbon Resistor	3.9K 1/4 J AX TP	カーボン抵抗			01
-204	**HF456390**	Carbon Resistor	3.9K 1/4 J AX TP	カーボン抵抗			01
R201	**V2549900**	Carbon Resistor	3.9K 1/6 J 26TP	カーボン抵抗			
-204	**V2549900**	Carbon Resistor	3.9K 1/6 J 26TP	カーボン抵抗			
R205	**HF457270**	Carbon Resistor	27.0K 1/4 J AX TP	カーボン抵抗			01
R205	**V2550900**	Carbon Resistor	27.0K 1/6J 26TP	カーボン抵抗			
R206	**WD556700**	Flame Proof C. Resistor	2.2 1/4 J TE-26	不燃化カーボン抵抗			01
-209	**WD556700**	Flame Proof C. Resistor	2.2 1/4 J TE-26	不燃化カーボン抵抗			01
R210	**HF454680**	Carbon Resistor	68.0 1/4 J AX TP	カーボン抵抗			01
R210	**V2547800**	Carbon Resistor	68.0 1/6J 26TP	カーボン抵抗			
R211	**HF454680**	Carbon Resistor	68.0 1/4 J AX TP	カーボン抵抗			01
R211	**V2547800**	Carbon Resistor	68.0 1/6J 26TP	カーボン抵抗			
R212	**HF455330**	Carbon Resistor	330.0 1/4 J AX TP	カーボン抵抗			01
R212	**V2548600**	Carbon Resistor	330.0 1/6J 26TP	カーボン抵抗			
R213	**HF455330**	Carbon Resistor	330.0 1/4 J AX TP	カーボン抵抗			01
R213	**V2548600**	Carbon Resistor	330.0 1/6J 26TP	カーボン抵抗			
R214	**HF456470**	Carbon Resistor	4.7K 1/4 J AX TP	カーボン抵抗			01
R214	**V2550000**	Carbon Resistor	4.7K 1/6 J 26TP	カーボン抵抗			
R215	**HF456470**	Carbon Resistor	4.7K 1/4 J AX TP	カーボン抵抗			01
R215	**V2550000**	Carbon Resistor	4.7K 1/6 J 26TP	カーボン抵抗			
R216	**HF454100**	Carbon Resistor	10.0 1/4 J AX TP	カーボン抵抗			01
R217	**HF454100**	Carbon Resistor	10.0 1/4 J AX TP	カーボン抵抗			01
R301	**HF456180**	Carbon Resistor	1.8K 1/4 J AX TP	カーボン抵抗			01
R301	**V2549500**	Carbon Resistor	1.8K 1/6 J 26TP	カーボン抵抗			
R302	**HF457330**	Carbon Resistor	33.0K 1/4 J AX TP	カーボン抵抗			01
R302	**V2551000**	Carbon Resistor	33.0K 1/6J 26TP	カーボン抵抗			
R303	**HF456470**	Carbon Resistor	4.7K 1/4 J AX TP	カーボン抵抗			01
R303	**V2550000**	Carbon Resistor	4.7K 1/6 J 26TP	カーボン抵抗			
⚠ SW501	**V9661700**	Push Switch	SY16-32-4(U99S2)/T	プッシュSW	■STANDBY/▂ON		03
⚠ SW501	**VY980400**	Push Switch	SDDLB15700 J,UC,CE	プッシュSW			03
TR301	**WH336700**	Transistor	2SC2062STP 10000 T	トランジスタ			01
TR301	**WH376600**	Transistor	2SC982TM(TPE2,F)	トランジスタ			
VR301	**VV049100**	Rotary Variable Resistor	B 10K RK09K1110	ロータリーVR	CONTRAST		01
VR401	**VZ486300**	Rotary Variable Resistor	B10K EVJ05DF20B14	ロータリーVR	PITCH BEND		03
VR601	**WC709800**	Rotary Variable Resistor	A 5.0K XV014111YGP	二連ロータリーVR	MASTER VOLUME		02
WH201	--	Connector Assembly	TWL 2P	TWL束線	(WG46040)		
WH202	--	Connector Assembly	TWR 2P	TWR束線	(WG46050)		
WH401	--	Connector Assembly	PB 3P L=825	PB束線	(WG46060)		
WH501	--	PSW Wire	PSW 4P L=120	PSW線材	(WG45930)		
WH601	--	Connector Assembly	MVR 5P L=120	MVR束線	(WG46070)		
WH901	--	Connector Assembly	ENC 3P P=2.0 L=60	ENC束線	(WB09270)		
*	**WM367100**	Circuit Board	DM	DMシート	(WM36720)(X9734B0)		
C01	**US145100**	Ceramic Capacitor-F (chip)	0.1000 25V Z RECT.	チップセラ(F)			01
-47	**US145100**	Ceramic Capacitor-F (chip)	0.1000 25V Z RECT.	チップセラ(F)			01
C101	**US062220**	Ceramic Capacitor-SL(chip)	220P 50V J RECT.	チップセラ(SL)			01
C102	**US063470**	Ceramic Capacitor-B (chip)	4700P 50V K RECT.	チップセラ(B)			01
C103	**UF038100**	Electrolytic Cap. (chip)	100 16V	チップケミコン			01
C104	**US145100**	Ceramic Capacitor-F (chip)	0.1000 25V Z RECT.	チップセラ(F)			01
C105	**US061220**	Ceramic Capacitor-CH(chip)	22P 50V J RECT.	チップセラ(CH)			01
C106	**US061220**	Ceramic Capacitor-CH(chip)	22P 50V J RECT.	チップセラ(CH)			01
C107	**US145100**	Ceramic Capacitor-F (chip)	0.1000 25V Z RECT.	チップセラ(F)			01
C108	**US062100**	Ceramic Capacitor-SL(chip)	100P 50V J RECT.	チップセラ(SL)			01
C109	**US145100**	Ceramic Capacitor-F (chip)	0.1000 25V Z RECT.	チップセラ(F)			01
-119	**US145100**	Ceramic Capacitor-F (chip)	0.1000 25V Z RECT.	チップセラ(F)			01
C201	**US145100**	Ceramic Capacitor-F (chip)	0.1000 25V Z RECT.	チップセラ(F)			01
-208	**US145100**	Ceramic Capacitor-F (chip)	0.1000 25V Z RECT.	チップセラ(F)			01
C209	**UF037100**	Electrolytic Cap. (chip)	10 16V	チップケミコン			01
C210	**US145100**	Ceramic Capacitor-F (chip)	0.1000 25V Z RECT.	チップセラ(F)			01
C211	**UF158100**	Electrolytic Cap. (chip)	100 35V	チップケミコン			
C211	**WB291100**	Electrolytic Cap. (chip)	35V EEE1VA101UP	チップケミコン			
C212	**US062390**	Ceramic Capacitor-SL(chip)	390P 50V J RECT.	チップセラ(SL)			01
C213	**UF038100**	Electrolytic Cap. (chip)	100 16V	チップケミコン			01
C214	**US062100**	Ceramic Capacitor-SL(chip)	100P 50V J RECT.	チップセラ(SL)			01

*: New Parts

RANK: Japan only

DM

REF NO.	PART NO.	DESCRIPTION		部品名	REMARKS	QTY	RANK
-223	**US062100**	Ceramic Capacitor-SL(chip)	100P 50V J RECT.	チップセラ（SL）			01
C301	**US145100**	Ceramic Capacitor-F (chip)	0.1000 25V Z RECT.	チップセラ（F）			01
-303	**US145100**	Ceramic Capacitor-F (chip)	0.1000 25V Z RECT.	チップセラ（F）			01
C304	**US061270**	Ceramic Capacitor-CH(chip)	27P 50V J RECT.	チップセラ（CH）			01
C305	**US061220**	Ceramic Capacitor-CH(chip)	22P 50V J RECT.	チップセラ（CH）			01
C306	**US145100**	Ceramic Capacitor-F (chip)	0.1000 25V Z RECT.	チップセラ（F）			01
C307	**UF038100**	Electrolytic Cap. (chip)	100 16V	チップケミコン			01
C308	**UF037100**	Electrolytic Cap. (chip)	10 16V	チップケミコン			01
C309	**US063100**	Ceramic Capacitor-B (chip)	1000P 50V K RECT.	チップセラ（B）			01
C310	**US145100**	Ceramic Capacitor-F (chip)	0.1000 25V Z RECT.	チップセラ（F）			01
C311	**US145100**	Ceramic Capacitor-F (chip)	0.1000 25V Z RECT.	チップセラ（F）			01
C401	**US145100**	Ceramic Capacitor-F (chip)	0.1000 25V Z RECT.	チップセラ（F）			01
C402	**UF037100**	Electrolytic Cap. (chip)	10 16V	チップケミコン			01
C403	**US145100**	Ceramic Capacitor-F (chip)	0.1000 25V Z RECT.	チップセラ（F）			01
C404	**US064100**	Ceramic Capacitor-B (chip)	0.0100 50V K RECT.	チップセラ（B）			01
C405	**US063270**	Ceramic Capacitor-B (chip)	2700P 50V K RECT.	チップセラ（B）			01
C406	**US063270**	Ceramic Capacitor-B (chip)	2700P 50V K RECT.	チップセラ（B）			01
C407	**US064100**	Ceramic Capacitor-B (chip)	0.0100 50V K RECT.	チップセラ（B）			01
C408	**US063270**	Ceramic Capacitor-B (chip)	2700P 50V K RECT.	チップセラ（B）			01
C409	**US063270**	Ceramic Capacitor-B (chip)	2700P 50V K RECT.	チップセラ（B）			01
C410	**UF037100**	Electrolytic Cap. (chip)	10 16V	チップケミコン			01
C411	**UF066100**	Electrolytic Cap. (chip)	1 50V	チップケミコン			01
C412	**UF066100**	Electrolytic Cap. (chip)	1 50V	チップケミコン			01
C413	**US062100**	Ceramic Capacitor-SL(chip)	100P 50V J RECT.	チップセラ（SL）			01
C414	**US062100**	Ceramic Capacitor-SL(chip)	100P 50V J RECT.	チップセラ（SL）			01
C501	**UF037100**	Electrolytic Cap. (chip)	10 16V	チップケミコン			01
C502	**US145100**	Ceramic Capacitor-F (chip)	0.1000 25V Z RECT.	チップセラ（F）			01
C503	**US063100**	Ceramic Capacitor-B (chip)	1000P 50V K RECT.	チップセラ（B）			01
C601	**US061470**	Ceramic Capacitor-CH(chip)	47P 50V J RECT.	チップセラ（CH）			01
-614	**US061470**	Ceramic Capacitor-CH(chip)	47P 50V J RECT.	チップセラ（CH）			01
C615	**US062100**	Ceramic Capacitor-SL(chip)	100P 50V J RECT.	チップセラ（SL）			01
C616	**US062100**	Ceramic Capacitor-SL(chip)	100P 50V J RECT.	チップセラ（SL）			01
C701	**US145100**	Ceramic Capacitor-F (chip)	0.1000 25V Z RECT.	チップセラ（F）			01
C702	**US145100**	Ceramic Capacitor-F (chip)	0.1000 25V Z RECT.	チップセラ（F）			01
C703	**US062100**	Ceramic Capacitor-SL(chip)	100P 50V J RECT.	チップセラ（SL）			01
-729	**US062100**	Ceramic Capacitor-SL(chip)	100P 50V J RECT.	チップセラ（SL）			01
C801	**US145100**	Ceramic Capacitor-F (chip)	0.1000 25V Z RECT.	チップセラ（F）			01
-807	**US145100**	Ceramic Capacitor-F (chip)	0.1000 25V Z RECT.	チップセラ（F）			01
C808	**UF037100**	Electrolytic Cap. (chip)	10 16V	チップケミコン			01
C809	**US145100**	Ceramic Capacitor-F (chip)	0.1000 25V Z RECT.	チップセラ（F）			01
C901	**UF038100**	Electrolytic Cap. (chip)	100 16V	チップケミコン			01
C902	**UF038100**	Electrolytic Cap. (chip)	100 16V	チップケミコン			01
C903	**US145100**	Ceramic Capacitor-F (chip)	0.1000 25V Z RECT.	チップセラ（F）			01
-907	**US145100**	Ceramic Capacitor-F (chip)	0.1000 25V Z RECT.	チップセラ（F）			01
CN201	**WA625700**	Connector, FFC	52793 14P SE	FFCコネクター			
CN201	**WF377500**	Connector, FPC	YSF5 14P SE	FPCコネクター			
CN301	**WC195000**	Connector, FFC/FPC	52808 12P TE	FFC／FPCコネクター			01
* CN302	**WC194400**	Connector, FFC/FPC	52808 5P TE	FFC／FPCコネクター			
CN601	**WD295300**	Connector, FFC	52793 12P SE	FFCコネクター			
CN601	**WG951300**	Connector, FPC	YSF5 12P SE	FPCコネクター			
CN602	**WD295400**	Connector, FFC	52793 15P SE	FFCコネクター			
CN602	**WG951500**	Connector, FPC	YSF5 15P SE	FPCコネクター			
CN701	**WG468500**	Connector, FFC	52852 27P SE	FFCコネクター			
CN901	**WD295500**	Connector, FFC	52793 19P SE	FFCコネクター			
CN901	**WG951700**	Connector, FPC	YSF5 19P SE	FPCコネクター			
CR701	**WA782100**	Ceramic Resonator	5.000MHz	セラミック振動子			
D201	**V2376600**	Diode	RB500V-40 TAPING	ダイオード			01
DA301	**V9424900**	Diode Array	1SS372 TE85L	ダイオードアレイ			01
-304	**V9424900**	Diode Array	1SS372 TE85L	ダイオードアレイ			01
DA301	**WH107100**	Diode Array	MA3Z79300L 0.10 X2	ダイオードアレイ			
-304	**WH107100**	Diode Array	MA3Z79300L 0.10 X2	ダイオードアレイ			
IC101	**X6055A00**	IC	YMW767-VTZ	IC	CPU (SWL01T)		10
IC102	**X4374A00**	IC	S-80136ANMC-JCVT2G	IC	SYSTEM RESET		01
IC102	**X5888A00**	IC	BD45365G	IC			01
IC103	**X0158A00**	IC	SN74AHCT1G08DCKR	IC	AND GATE		01
IC103	**X7542A00**	IC	74V1T08CTR	IC			
IC104	**X0158A00**	IC	SN74AHCT1G08DCKR	IC	AND GATE		01
IC104	**X7542A00**	IC	74V1T08CTR	IC			
IC201	**X5422A00**	IC	S1D13700F01A100	IC	LCD CONTROLLER		08
IC202	**X7371A00**	IC	MC34063EBD-TR	IC	DC-DC CONVERTER		03

✻: New Parts

RANK: Japan only

DM

REF NO.	PART NO.	DESCRIPTION		部品名	REMARKS	QTY	RANK
IC301	**X5879A00**	IC	ISP1161A1BD_118-PB	IC	USB CONTROLLER		09
IC302	**X7414A00**	IC	R5520H001A-T1-F	IC	USB HIGH SIDE SWITCH		04
IC401	**X6040A00**	IC	AK4385ET	IC	DAC		03
IC402	**X2331A00**	IC	NJM4580E(TE2)	IC	OP AMP		01
IC501	**X6905A00**	IC	ADC084S021CIMM	IC	ADC		04
IC701	**XZ560100**	IC	UPD789022GB-A15-8E	IC	CPU KBS		04
* IC801	**X9383100**	IC	MR27V12852L-0B1TA0	IC	P2ROM 128M PROG./WAVE		
IC803	**X3485B00**	IC	MBM29LV800BE-70PFT	IC	FLASH ROM 8M		05
IC803	**X4025C00**	IC	MX29LV800BBTC-70G	IC			05
IC803	**X4025D00**	IC	MX29LV800CBTC-70G	IC			05
IC803	**X7234A00**	IC	S29AL008D70TFI020	IC			05
IC804	**X3860A00**	IC	MSM51V18165F-60T3K	IC	DRAM 16M		08
IC804	**X4027A00**	IC	MSM51V18165F-50T3K	IC			
IC804	**X4028A00**	IC	GLT4160L16P-45TC	IC			08
IC805	**X5647A00**	IC	SN74LV32APWR	IC	OR		01
IC901	**X3679A00**	IC	RH5RZ25CA-T1-F	IC	REGULATOR +2.5V		03
IC902	**X5889A00**	IC	BA33BC0FP	IC	REGULATOR +3.3V		03
L101	**VY657200**	Chip Inductance	600 BK1608HM601-T	チップインダクタ			01
L201	**WF765300**	Chip Inductance	150U SLF7045T-151M	チップインダクタ			01
L301	**WE863900**	Common Mode Coil	DLP11SN900HL2L	コモンモードコイル			
L901	**VY657200**	Chip Inductance	600 BK1608HM601-T	チップインダクタ			01
R101	**RD357470**	Carbon Resistor (chip)	47.0K 63M J RECT.	チップ抵抗			01
R102	**RD357470**	Carbon Resistor (chip)	47.0K 63M J RECT.	チップ抵抗			01
R103	**RD357100**	Carbon Resistor (chip)	10.0K 63M J RECT.	チップ抵抗			01
R104	**RD357470**	Carbon Resistor (chip)	47.0K 63M J RECT.	チップ抵抗			01
R105	**RD356100**	Carbon Resistor (chip)	1.0K 63M J RECT.	チップ抵抗			01
R106	**RD355470**	Carbon Resistor (chip)	470.0 63M J RECT.	チップ抵抗			01
R107	**RD359100**	Carbon Resistor (chip)	1.0M 63M J RECT.	チップ抵抗			01
R108	**RD357470**	Carbon Resistor (chip)	47.0K 63M J RECT.	チップ抵抗			01
R109	**RD355100**	Carbon Resistor (chip)	100.0 63M J RECT.	チップ抵抗			01
R110	**RD355100**	Carbon Resistor (chip)	100.0 63M J RECT.	チップ抵抗			01
R111	**RD350000**	Carbon Resistor (chip)	0 63M J RECT.	チップ抵抗			01
R112	**RD350000**	Carbon Resistor (chip)	0 63M J RECT.	チップ抵抗			01
R113	**RD357470**	Carbon Resistor (chip)	47.0K 63M J RECT.	チップ抵抗			01
R114	**RD357470**	Carbon Resistor (chip)	47.0K 63M J RECT.	チップ抵抗			01
R115	**RD355100**	Carbon Resistor (chip)	100.0 63M J RECT.	チップ抵抗			01
R116	**RD355100**	Carbon Resistor (chip)	100.0 63M J RECT.	チップ抵抗			01
R117	**RD357470**	Carbon Resistor (chip)	47.0K 63M J RECT.	チップ抵抗			01
R201	**RD357470**	Carbon Resistor (chip)	47.0K 63M J RECT.	チップ抵抗			01
R202	**RD350000**	Carbon Resistor (chip)	0 63M J RECT.	チップ抵抗			01
R203	**RD350000**	Carbon Resistor (chip)	0 63M J RECT.	チップ抵抗			01
R204	**RD357470**	Carbon Resistor (chip)	47.0K 63M J RECT.	チップ抵抗			01
-206	**RD357470**	Carbon Resistor (chip)	47.0K 63M J RECT.	チップ抵抗			01
R207	**RD355220**	Carbon Resistor (chip)	220.0 63M J RECT.	チップ抵抗			01
R208	**RF457220**	Carbon Resistor (chip)	22.0K D RECT.	チップ抵抗			
R209	**RF456100**	Carbon Resistor (chip)	1.0K D RECT.	チップ抵抗			
R210	**RD355100**	Carbon Resistor (chip)	100.0 63M J RECT.	チップ抵抗			01
R301	**RD357100**	Carbon Resistor (chip)	10.0K 63M J RECT.	チップ抵抗			01
-303	**RD357100**	Carbon Resistor (chip)	10.0K 63M J RECT.	チップ抵抗			01
R305	**RD357100**	Carbon Resistor (chip)	10.0K 63M J RECT.	チップ抵抗			01
R306	**RD357100**	Carbon Resistor (chip)	10.0K 63M J RECT.	チップ抵抗			01
R307	**RD359100**	Carbon Resistor (chip)	1.0M 63M J RECT.	チップ抵抗			01
R308	**RD355680**	Carbon Resistor (chip)	680.0 63M J RECT.	チップ抵抗			01
R309	**RD357100**	Carbon Resistor (chip)	10.0K 63M J RECT.	チップ抵抗			01
R310	**RD357220**	Carbon Resistor (chip)	22.0K 63M J RECT.	チップ抵抗			01
R311	**RD357100**	Carbon Resistor (chip)	10.0K 63M J RECT.	チップ抵抗			01
R312	**RD354220**	Carbon Resistor (chip)	22.0 63M J RECT.	チップ抵抗			01
R313	**RD354220**	Carbon Resistor (chip)	22.0 63M J RECT.	チップ抵抗			01
R314	**RD354180**	Carbon Resistor (chip)	18.0 63M J RECT.	チップ抵抗			01
R315	**RD354180**	Carbon Resistor (chip)	18.0 63M J RECT.	チップ抵抗			01
R316	**RD356100**	Carbon Resistor (chip)	1.0K 63M J RECT.	チップ抵抗			01
R317	**RD357470**	Carbon Resistor (chip)	47.0K 63M J RECT.	チップ抵抗			01
R318	**RD356100**	Carbon Resistor (chip)	1.0K 63M J RECT.	チップ抵抗			01
R401	**RD356470**	Carbon Resistor (chip)	4.7K 63M J RECT.	チップ抵抗			01
R402	**RD356470**	Carbon Resistor (chip)	4.7K 63M J RECT.	チップ抵抗			01
R403	**RD356220**	Carbon Resistor (chip)	2.2K 63M J RECT.	チップ抵抗			01
R404	**RD356470**	Carbon Resistor (chip)	4.7K 63M J RECT.	チップ抵抗			01
R405	**RD356470**	Carbon Resistor (chip)	4.7K 63M J RECT.	チップ抵抗			01
R406	**RD356220**	Carbon Resistor (chip)	2.2K 63M J RECT.	チップ抵抗			01
R407	**RD356220**	Carbon Resistor (chip)	2.2K 63M J RECT.	チップ抵抗			01

*: New Parts

RANK: Japan only

DM and MK-88C and MK-88H and MK-88L and PNL/PNR

REF NO.	PART NO.	DESCRIPTION		部品名	REMARKS	QTY	RANK
R408	**RD355180**	Carbon Resistor (chip)	180.0 63M J RECT.	チップ抵抗			01
R409	**RD355180**	Carbon Resistor (chip)	180.0 63M J RECT.	チップ抵抗			01
R410	**RD356220**	Carbon Resistor (chip)	2.2K 63M J RECT.	チップ抵抗			01
R411	**RD355180**	Carbon Resistor (chip)	180.0 63M J RECT.	チップ抵抗			01
R412	**RD355180**	Carbon Resistor (chip)	180.0 63M J RECT.	チップ抵抗			01
R413	**RD355100**	Carbon Resistor (chip)	100.0 63M J RECT.	チップ抵抗			01
R414	**RD355100**	Carbon Resistor (chip)	100.0 63M J RECT.	チップ抵抗			01
R415	**RD356120**	Carbon Resistor (chip)	1.2K 63M J RECT.	チップ抵抗			01
R416	**RD356150**	Carbon Resistor (chip)	1.5K 63M J RECT.	チップ抵抗			01
R501	**RD356100**	Carbon Resistor (chip)	1.0K 63M J RECT.	チップ抵抗			01
R502	**RD357470**	Carbon Resistor (chip)	47.0K 63M J RECT.	チップ抵抗			01
R601	**RD357470**	Carbon Resistor (chip)	47.0K 63M J RECT.	チップ抵抗			01
R602	**RD357470**	Carbon Resistor (chip)	47.0K 63M J RECT.	チップ抵抗			01
R603	**RD356100**	Carbon Resistor (chip)	1.0K 63M J RECT.	チップ抵抗			01
R604	**RD356100**	Carbon Resistor (chip)	1.0K 63M J RECT.	チップ抵抗			01
R701	**RD355100**	Carbon Resistor (chip)	100.0 63M J RECT.	チップ抵抗			01
-703	**RD355100**	Carbon Resistor (chip)	100.0 63M J RECT.	チップ抵抗			01
R704	**RD353470**	Carbon Resistor (chip)	4.7 63M J RECT.	チップ抵抗			01
R801	**RD357470**	Carbon Resistor (chip)	47.0K 63M J RECT.	チップ抵抗			01
-803	**RD357470**	Carbon Resistor (chip)	47.0K 63M J RECT.	チップ抵抗			01
RA201	**RE045100**	Resistor Array	100X4	抵抗アレイ			01
RA201	**WG891500**	Chip Resistor Array	1608X4 100 J	チップ抵抗アレイ			
RA202	**RE045100**	Resistor Array	100X4	抵抗アレイ			01
RA202	**WG891500**	Chip Resistor Array	1608X4 100 J	チップ抵抗アレイ			
RA601	**RE048100**	Resistor Array	100KX4	抵抗アレイ			01
* RA601	**WG898700**	Chip Resistor Array	1608X4 100K J	チップ抵抗アレイ			
RA602	**RE048100**	Resistor Array	100KX4	抵抗アレイ			01
* RA602	**WG898700**	Chip Resistor Array	1608X4 100K J	チップ抵抗アレイ			
RA603	**RE046100**	Resistor Array	1KX4	抵抗アレイ			01
RA603	**WG893900**	Chip Resistor Array	1608X4 1.0K J	チップ抵抗アレイ			
RA604	**RE046100**	Resistor Array	1KX4	抵抗アレイ			01
RA604	**WG893900**	Chip Resistor Array	1608X4 1.0K J	チップ抵抗アレイ			
RA701	**RE045100**	Resistor Array	100X4	抵抗アレイ			01
-703	**RE045100**	Resistor Array	100X4	抵抗アレイ			01
RA701	**WG891500**	Chip Resistor Array	1608X4 100 J	チップ抵抗アレイ			
-703	**WG891500**	Chip Resistor Array	1608X4 100 J	チップ抵抗アレイ			
RA704	**RE047220**	Resistor Array	22KX4	抵抗アレイ			01
-706	**RE047220**	Resistor Array	22KX4	抵抗アレイ			01
RA704	**WG897100**	Chip Resistor Array	1608X4 22K J	チップ抵抗アレイ			
-706	**WG897100**	Chip Resistor Array	1608X4 22K J	チップ抵抗アレイ			
RA707	**RE046100**	Resistor Array	1KX4	抵抗アレイ			01
-709	**RE046100**	Resistor Array	1KX4	抵抗アレイ			01
RA707	**WG893900**	Chip Resistor Array	1608X4 1.0K J	チップ抵抗アレイ			
-709	**WG893900**	Chip Resistor Array	1608X4 1.0K J	チップ抵抗アレイ			
TA601	**WB123200**	Transistor Array	IMB10A T110	トランジスタアレイ			05
-604	**WB123200**	Transistor Array	IMB10A T110	トランジスタアレイ			05
TR601	**VY677600**	Digital Transistor	DTC123JKA TP	デジタルトランジスタ			01
X101	**WE194400**	Quartz Crystal Unit	16.9344MHz HC-49S-SMD	水晶振動子			01
X301	**WG138100**	Quartz Crystal Unit	6.0000MHz HC-49S-SMD	水晶振動子			
	V7639100	Circuit Board	MK-88C	シート88C	(V763880)(X0001A0)		08
2	**VB941200**	Diode	1SS133,1SS176 TE	ダイオード	C#2-C5	72	01
3	**VK025600**	Wire Trap	52147 12P TE	ワイヤートラップ		3	01
4	**VF728300**	Wire Trap	52147 6P TE	ワイヤートラップ			01
	V7639000	Circuit Board	MK-88H	シート88H	(V763870)(X0000A0)		08
2	**VB941200**	Diode	1SS133,1SS176 TE	ダイオード	C#5-C7	48	01
3	**VK025600**	Wire Trap	52147 12P TE	ワイヤートラップ			01
4	**VK024800**	Wire Trap	52147 4P TE	ワイヤートラップ			01
	V7639200	Circuit Board	MK-88L	シート88L	(V763890)(X0002A0)		08
2	**VB941200**	Diode	1SS133,1SS176 TE	ダイオード	A-1-C2	56	01
3	**VK025600**	Wire Trap	52147 12P TE	ワイヤートラップ			01
4	**VK024900**	Wire Trap	52147 5P TE	ワイヤートラップ			01
*	**WN429200**	Circuit Board	PNL	PNLシート	(WN42910)(X7137D0)		
*	**WN429300**	Circuit Board	PNR	PNRシート	(WN42910)(X7137D0)		
CN01	**V4928200**	Connector, FFC	52806-1210 12P TE	FFCコネクター			01
CN02	**WG033600**	FFC Connector	52806 15P TE	FFCコネクタ			
CN03	**VK024700**	Wire Trap	52147 3P TE	ワイヤートラップ			01

*: New Parts

RANK: Japan only

PNL/PNR and RELAY

REF NO.	PART NO.	DESCRIPTION		部品名	REMARKS	QTY	RANK
D01	**VB941200**	Diode	1SS133,1SS176 TE	ダイオード			01
-08	**VB941200**	Diode	1SS133,1SS176 TE	ダイオード			01
D01	**VV437800**	Diode	1N4148(DO-34)	ダイオード			01
-08	**VV437800**	Diode	1N4148(DO-34)	ダイオード			01
LD01	**WG913000**	LED Red	BL-B6141K-FP7	LED	P.A.T. ON/OFF		01
LD02	**WG913200**	LED Red/Yellow Green	BL-BEG201-LC22-21	2色LED	START/STOP		01
LD03	**WG913000**	LED Red	BL-B6141K-FP7	LED	SONG		01
LD04	**WG913000**	LED Red	BL-B6141K-FP7	LED	EASY SONG ARRANGER		01
LD05	**WG913000**	LED Red	BL-B6141K-FP7	LED	STYLE		01
LD06	**WG913000**	LED Red	BL-B6141K-FP7	LED	VOICE		01
R01	**HF455150**	Carbon Resistor	150.0 1/4 J AX TP	カーボン抵抗			01
R01	**V2548200**	Carbon Resistor	150.0 1/6J 26TP	カーボン抵抗			01
R02	**HF454270**	Carbon Resistor	27.0 1/4 J AX TP	カーボン抵抗			01
R02	**V2547300**	Carbon Resistor	27.0 1/6J 26TP	カーボン抵抗			
R03	**HF454180**	Carbon Resistor	18.0 1/4 J AX TP	カーボン抵抗			01
R03	**V2547100**	Carbon Resistor	18.0 1/6J 26TP	カーボン抵抗			
R05	**HF455150**	Carbon Resistor	150.0 1/4 J AX TP	カーボン抵抗			01
-08	**HF455150**	Carbon Resistor	150.0 1/4 J AX TP	カーボン抵抗			01
R05	**V2548200**	Carbon Resistor	150.0 1/6J 26TP	カーボン抵抗			01
-08	**V2548200**	Carbon Resistor	150.0 1/6J 26TP	カーボン抵抗			01
	WG200800	Circuit Board	RELAY	RELAYシート	(WG20090)(X7138C0)		04
	--	Jumper Wire	0.55	ジャンパー線	(VA07890)		
CN01	**WC338900**	FFC Connector	52806 27P TE	FFCコネクタ			
CN02	**VK025600**	Wire Trap	52147 12P TE	ワイヤートラップ			01
CN03	**VK024900**	Wire Trap	52147 5P TE	ワイヤートラップ			01
CN04	**VF728300**	Wire Trap	52147 6P TE	ワイヤートラップ			01
CN05	**VK024800**	Wire Trap	52147 4P TE	ワイヤートラップ			01
	X7430A00	Speaker	12.0cm 4 ohm 10W	スピーカー	WOOFER		07
	X0159A00	Speaker	3.0cm	スピーカ	TWEETER		01
*	**WN744800**	LCD Unit		液晶ユニット			

*: New Parts

RANK: Japan only

■ DGX-530/YPG-535 BLOCK DIAGRAM

DGX-530/YPG-535

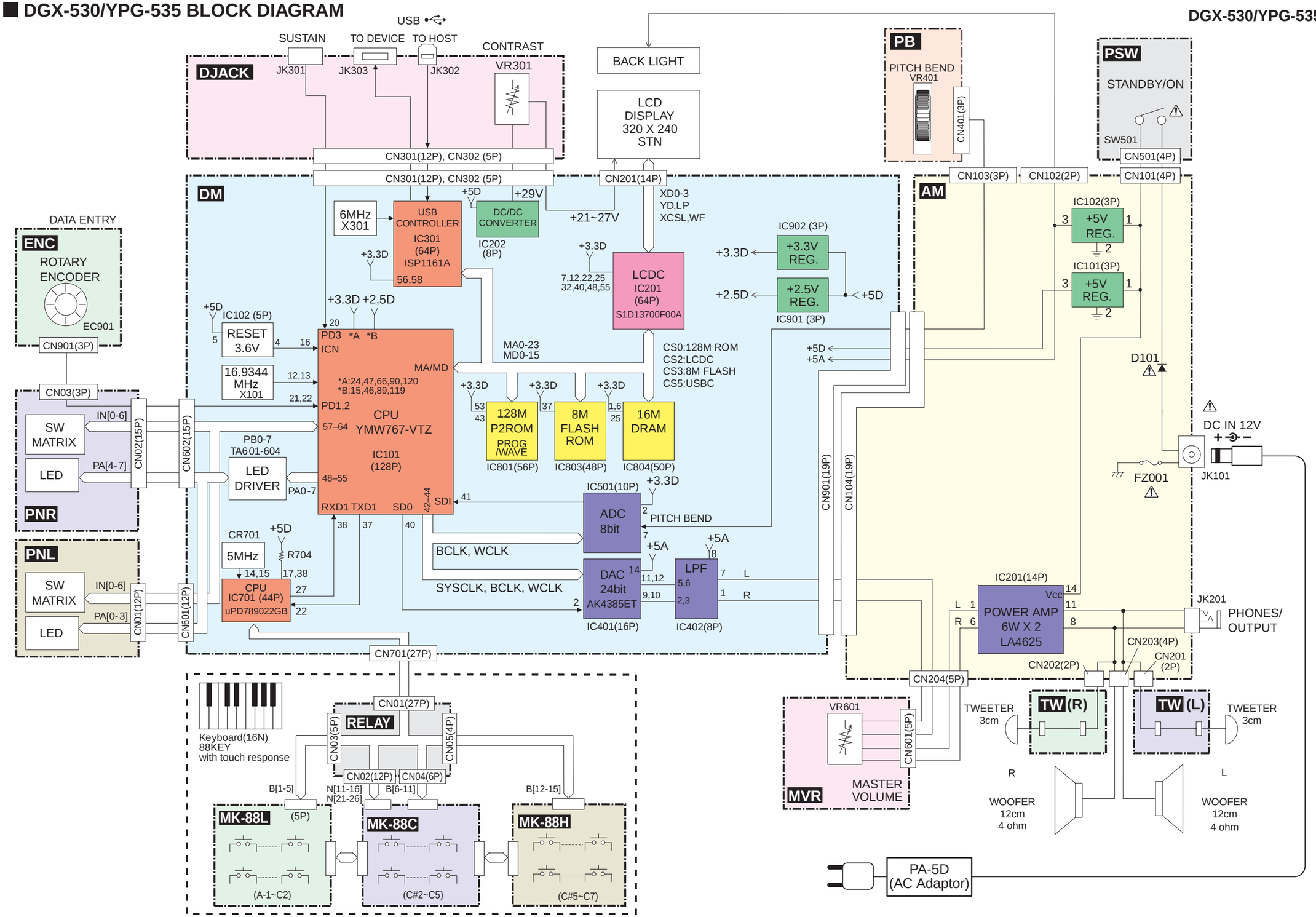

■ **WARNING:** Components having special characteristics are marked ⚠ and must be replaced with parts having specification equal to those originally installed.

DGX-530/YPG-535 OVERALL CIRCUIT DIAGRAM 1/2 (AM, DJACK, DM, MVR, PB, PSW, TW)

DM

Keyboard Scanning

CPU

SWL01(T)

SYSTEM RESET

Reset time:50ms
Detect Voltage:3.5V

AND

ADC

DAC

OP AMP

DC/DC CONVERTER

LCD CONTROLLER

BACK LIGHT

LCD

LCD Assembly

USB HIGH SIDE SWITCH

USB CONTROLLER

REGULATOR +2.5V

REGULATOR +3.3V

DJACK

SUSTAIN

TO HOST

USB

TO DEVICE

CONTRAST

28CC1-2001029941/2

28CC1-2001032887

to RELAY-CN01
<Page2 L-3>

to PNL-CN01
<Page2 E-2>

to PNR-CN02
<Page2 E-5>

CS0	PROGRAM+WAVE
CS1	----
CS2	LCDC
CS3	FALSH ROM
CS4	DRAM
CS5	USB

128M P2ROM

8M FLASH ROM (DATA)

16M DRAM

OR

Not Installed

MASTER VOLUME

MVR

28CC1-2001029941/2

AM

POWER AMP

PHONES/OUTPUT

POWER SUPPLY

REGULATOR +5V

REGULATOR +5V

PITCH BEND

PB

28CC1-2001029941/2

STANDBY/ON

PSW

28CC1-2001029941/2

TW -L

28CC1-2001029941

TW -R

28CC1-2001029941

TWEETERS 3cm

WOOFERS 12cm 4 ohm

PA-5D (AC Adaptor)

DC IN 12V

28CC1-2001029941/2

- RH5RZ25CA-T1-F (X3679A00) REGULATOR +2.5V
  DM: IC901
  1. GND 2. INPUT 3. OUTPUT
- 1SS372 (V9424900) DIODE ARRAY
  DM: DA301–304
  1: ANODE1 2: CATHODE2 3: CATHODE1, ANODE2
- BA50BC0T (X5887A00) REGULATOR +6V
  AM: IC102
  1. INPUT 2. GND 3. OUTPUT
- MA3Z79300L (WH107100) DIODE ARRAY
  DM: DA301–304
  1: ANODE1 2: CATHODE2 3: CATHODE1, ANODE2
- BA33BC0FP (X5889A00) REGULATOR +3.3V
  DM: IC902
  1. INPUT 2. GND 3. OUTPUT
- RB500V-40 (V2376600) DIODE
  DM: D201
  1: ANODE 2: CATHODE
- μPC2905AHF-AZ (X7252A00) REGULATOR +5V
  AM: IC101
  1: INPUT 2: GND 3: OUTPUT
- DTC123JKA (VY677600) DIGITAL TRANSISTOR
  DM: TR601
  1: GND 2: IN 3: OUT
- NJM7805FA (XJ607A00) REGULATOR +5V
  AM: IC101
  1: INPUT 2: GND 3: OUTPUT
- 2SC2062S (WH336700) TRANSISTOR
  DJACK: TR301
  1: EMITTER 2: COLLECTOR 3: BASE
- 2SC982TM (WH376600) TRANSISTOR
  DJACK: TR301
  1: EMITTER 2: COLLECTOR 3: BASE

（セ）：Ceramic Capacitor
（マ）：Mylar Capacitor
（半セ）：Monolithic Ceramic Capacitor
金被：Metal Film Resistor

■ WARNING
Components having special characteristics are marked ⚠ and must be replaced with parts having specification equal to those originally installed.

Note: See Parts list for details of circuit board component parts.

■ DGX-530/YPG-535 OVERALL CIRCUIT DIAGRAM 2/2 (ENC, MK-88C, MK-88H, MK-88L, PNL, PNR, RELAY)

PNL

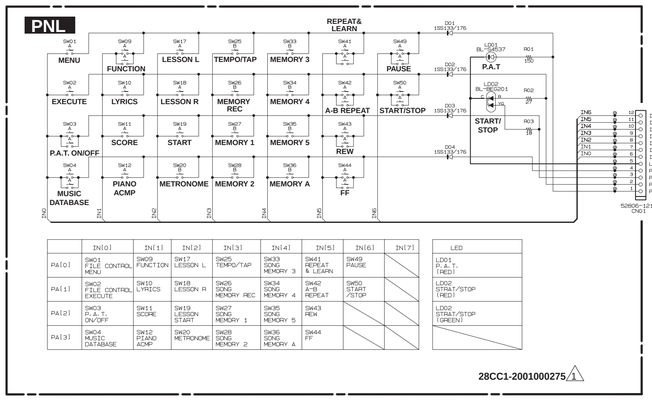

	IN[0]	IN[1]	IN[2]	IN[3]	IN[4]	IN[5]	IN[6]	IN[7]
PA[0]	SW01 FILE CONTROL MENU	SW09 FUNCTION	SW17 LESSON L	SW25 TEMPO/TAP	SW33 SONG MEMORY 3	SW41 REPEAT & LEARN	SW49 PAUSE	
PA[1]	SW02 FILE CONTROL EXECUTE	SW10 LYRICS	SW18 LESSON R	SW26 SONG MEMORY REC	SW34 SONG MEMORY 4	SW42 A-B REPEAT	SW50 START /STOP	
PA[2]	SW03 P.A.T. ON/OFF	SW11 SCORE	SW19 LESSON START	SW27 SONG MEMORY 1	SW35 SONG MEMORY 5	SW43 REW		
PA[3]	SW04 MUSIC DATABASE	SW12 PIANO ACMP	SW20 METRONOME	SW28 SONG MEMORY 2	SW36 SONG MEMORY A	SW44 FF		

LED
LD01 P.A.T. (RED)
LD02 START/STOP (RED)
LD02 START/STOP (GREEN)

ENC

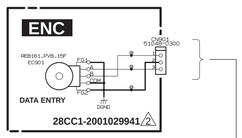

PNR

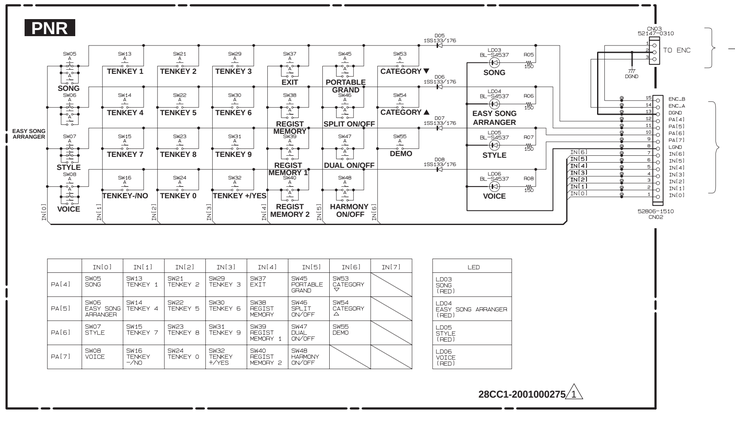

	IN[0]	IN[1]	IN[2]	IN[3]	IN[4]	IN[5]	IN[6]	IN[7]
PA[4]	SW05 SONG	SW13 TENKEY 1	SW21 TENKEY 2	SW29 TENKEY 3	SW37 EXIT	SW45 PORTABLE GRAND	SW53 CATEGORY ▼	
PA[5]	SW06 EASY SONG ARRANGER	SW14 TENKEY 4	SW22 TENKEY 5	SW30 TENKEY 6	SW38 REGIST MEMORY	SW46 SPLIT ON/OFF	SW54 CATEGORY ▲	
PA[6]	SW07 STYLE	SW15 TENKEY 7	SW23 TENKEY 8	SW31 TENKEY 9	SW39 REGIST MEMORY 1	SW47 DUAL ON/OFF	SW55 DEMO	
PA[7]	SW08 VOICE	SW16 TENKEY -/NO	SW24 TENKEY 0	SW32 TENKEY +/YES	SW40 REGIST MEMORY 2	SW48 HARMONY ON/OFF		

LED
LD03 SONG (RED)
LD04 EASY SONG ARRANGER (RED)
LD05 STYLE (RED)
LD06 VOICE (RED)

RELAY

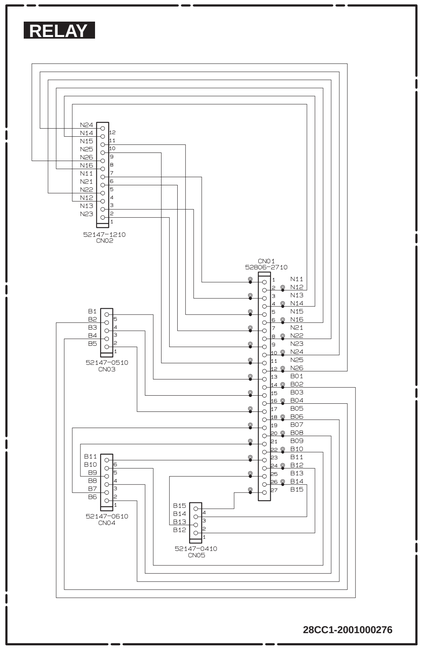

MK-88H

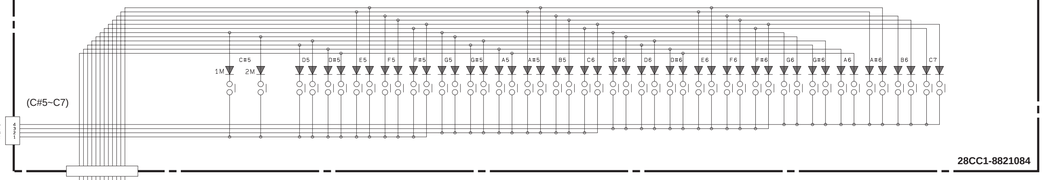

MK-88C

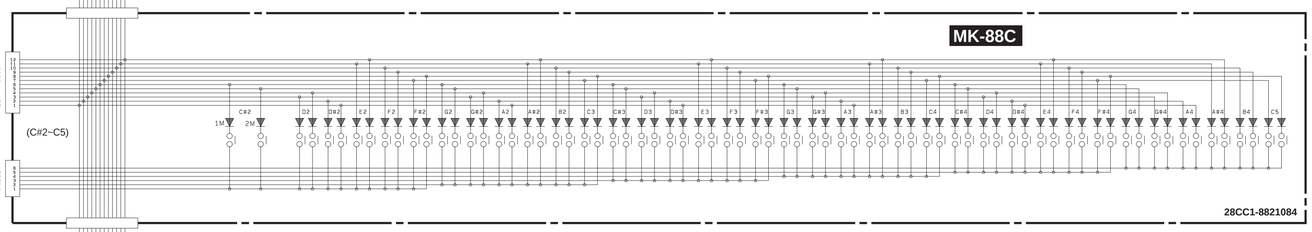

MK-88L

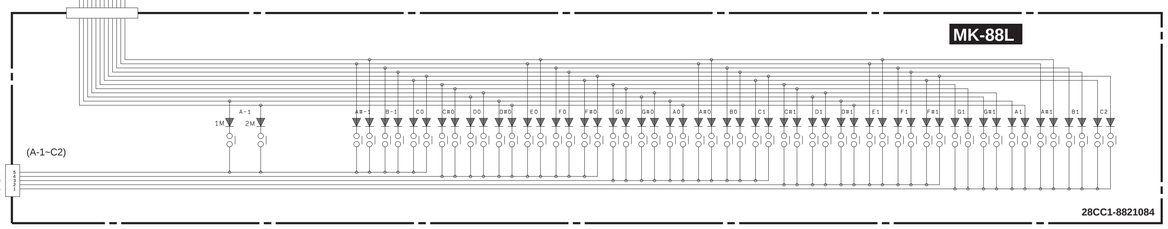

Note: See Parts list for details of circuit board component parts.