GUITAR AMPLIFIER

DG80-112

SERVICE MANUAL



CONTENTS

SPECIFICATIONS 3
PANEL LAYOUT 4
CIRCUIT BOARD LAYOUT 5
BLOCK DIAGRAM 6
DISASSEMBLY PROCEDURE 6
LSI PIN DESCRIPTION 9
IC BLOCK DIAGRAM 12
CIRCUIT BOARDS 14
TEST PROGRAM 18
ERROR MESSAGES 21
MIDI IMPLEMENTATION CHART 22
PARTS LIST

GA **011459**
19990301-148000

YAMAHA
HAMAMATSU, JAPAN
2.02K-186 Printed in Japan '99.02

Downloaded from www.Manualslib.com manuals search engine

IMPORTANT NOTICE

This manual has been provided for the use of authorized Yamaha Retailers and their service personnel. It has been assumed that basic service procedures inherent to the industry, and more specifically Yamaha Products, are already known and understood by the users, and have therefore not been restated.

WARNING: Failure to follow appropriate service and safety procedures when servicing this product may result in personal injury, destruction of expensive components and failure of the product to perform as specified. For these reasons, we advise all Yamaha product owners that all service required should be performed by an authorized Yamaha Retailer or the appointed service representative.

IMPORTANT: This presentation or sale of this manual to any individual or firm does not constitute authorization, certification, recognition of any applicable technical capabilities, or establish a principal-agent relationship of any form.

The data provided is belived to be accurate and applicable to the unit(s) indicated on the cover. The research engineering, and service departments of Yamaha are continually striving to improve Yamaha products. Modifications are, therefore, inevitable and changes in specification are subject to change without notice or obligation to retrofit. Should any discrepancy appear to exist, please contact the distributor's Service Division.

WARNING: Static discharges can destroy expensive components. Discharge any static electricity your body may have accumulated by grounding yourself to the ground buss in the unit (heavy gauge black wires connect to this buss.)

IMPORTANT: Turn the unit OFF during disassembly and parts replacement. Recheck all work before you apply power to the unit.

LITHIUM BATTERY HANDLING

This product uses a lithium battery for memory back-up.

WARNING: Lithium batteries are dangerous because they can be exploded by improper handling. Observe the following precautions when handling or replacing lithium batteries.

- Leave lithium battery replacement to qualified service personnel.
- Always replace with batteries of the same type.
- When installing on the PC board by soldering, solder using the connection terminals provided on the battery cells.
- Never solder directly to the cells. Perform the soldering as quickly as possible.
- Never reverse the battery polarities when installing.
- Do not short the batteries.
- Do not attempt to recharge these batteries.
- Do not disassemble the batteries.
- Never heat batteries or throw them into fire.

ADVARSEL!

Lithiumbatteri-Eksplosionsfare ved fejlagtig håndtering. Udskiftning må kun ske med batteri af samme fabrikat og type. Levér det brugte batteri tilbage til leverandøren.

VARNING

Explosionsfara vid felaktigt batteribyte.
Använd samma batterityp eller en ekvivalent typ som rekommenderas av apparattillverkaren.
Kassera använt batteri enligt fabrikantens instruktion.

VAROITUS

Paristo voi räjähtää, jos se on virheellisesti asennettu.
Vaihda paristo ainoastaan laitevalmistajan suosittelemaan tyyppiin.
Hävitä käytetty paristo valmistajan ohjeiden mukaisesti.

The following information complies with Dutch Official Gazette 1995. 45; ESSENTIALS OF ORDER ON THE COLLECTION OF BATTERIES.

- Please refer to the diassembly procedure for the removal of Back-up Battery.
- Leest u voor het verwijderen van de backup batterij deze beschrijving.

WARNING: CHEMICAL CONTENT NOTICE!

The solder used in the production of this product contains LEAD. In addition, other electrical/electronic and/or plastic (where applicable) components may also contain traces of chemicals found by the California Health and Welfare Agency (and possibly other entities) to cause cancer and/or birth defects or other reproductive harm.

DO NOT PLACE SOLDER, ELECTRICAL/ELECTRONIC OR PLASTIC COMPONENTS IN YOUR MOUTH FOR ANY REASON WHAT SO EVER!

Avoid prolonged, unprotected contact between solder and your skin! When soldering, do not inhale solder fumes or expose eyes to solder/flux vapor!

If you come in contact with solder or components located inside the enclosure of this product, wash your hands before handling food.

WARNING

Components having special characteristics are marked ⚠ and must be replaced with parts having specification equal to those originally installed.

Downloaded from www.Manualslib.com manuals search engine

■ SPECIFICATIONS

Digital Section

Complete Digital Signal Processing
Internal 8 Channel Preset
Digital Reverb (SPRING, HALL, PLATE)
Digital Tape Echo
Speaker Simulator (LINE OUT)

Analog Section

80 W (8 Ω) Solid State Power Amp
30 cm Speaker (Celestion G12H100) x 1

MIDI Function

Receive : Program change, Control Change (No. 7, 91, 94), Bulk In
Transmit : Bulk Out, Merge Out

Controller/Switch

Front Panel : TRIM, OUTPUT, GAIN, MASTER, TREBLE, HIGH MID, LOW MID, BASS (TIME), PRESENCE (FEED BACK), REVERB (LEVEL)
Rear Panel : LINE OUT volume, EFFECT BLEND
Switch : AMP SELECT (LEAD1, LEAD2, DRIVE1, DRIVE2, CRUNCH1, CRUNCH2, CLEAN1, CLEAN2), REVERB, MODE, ⇧, ⇩, STORE, RECALL

Display

AMP SELECT display LED x 8
MODE display LED x 3
REVERB type display x 3
7 segment LED x 2 digits

Indicator

Trim Level Display LED (Green)
Trim Clip Display LED (Red)

Connection Jacks

INPUT HIGH/LOW: Standard Phone Mono Jack
SPEAKER x2: Standard Phone Mono Jack
EFFECT SEND/RETURN: Standard Phone Mono Jack
LINE OUT: Cannon Jack
MIDI IN, MIDI OUT: 5 pin DIN

A/D Converter	20 bit
D/A Converter	20 bit
Sampling Frequency	48 kHz
Memory Number	128

Input Level/Impedance

INPUT HIGH: -30 dBm (THRU)/1 MΩ
INPUT LOW: -20 dBm (THRU)/1 MΩ
EFFECT RETURN: 0 dBm/120 kΩ

Output Level/Impedance

SPEAKER: 80 W RMS/8 Ω, 100 W RMS/4 Ω
LINE OUT: +4 dBm/600 Ω
EFFECT SEND: 0 dBm/2.2 kΩ

Power Requirements

U.S. and Canadian models : 120 V, 60 Hz
General model : 230 V, 50 Hz

Power Consumption	100 W
Dimensions (W x H x D)	542 x 510 x 284 mm (21.3” x 20.1” x 11.2”)
Weight	25.0 kg (55 lbs 2 oz)

Downloaded from www.Manualslib.com manuals search engine

■ PANEL LAYOUT

● Front Panel

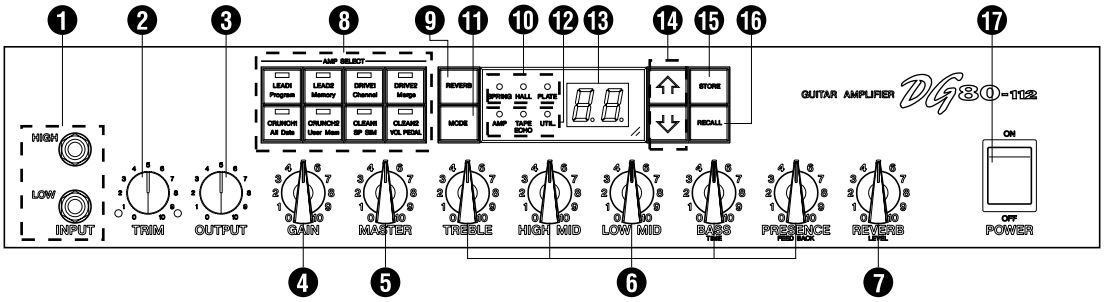

❶ Input Jacks (INPUT HIGH, LOW)
❷ Trim Control (TRIM)
❸ Output Level Control (OUTPUT)
❹ Gain Volume (GAIN)
❺ Master Volume (MASTER)
❻ Tone Controls
(TREBLE, HIGH MID, LOW MID, BASS, PRESENCE)
❼ Reverb Volume (REVERB)
❽ Amp Select Button/Amp Select Display
(LEAD 1, 2/DRIVE 1, 2/CRUNCH 1, 2/CLEAN 1, 2)
❾ Reverb Type Select Button (REVERB)
❿ Reverb Type Display Lamp (SPRING, HALL, PLATE)
⓫ Mode Select Button (MODE)
⓬ Mode Display Lamp (AMP/TAPE ECHO/UTIL.)
⓭ Display
⓮ ⇧/⇩ Buttons
⓯ Store Button (STORE)
⓰ Recall Button (RECALL)
⓱ Power Switch (POWER)

● Rear Panel

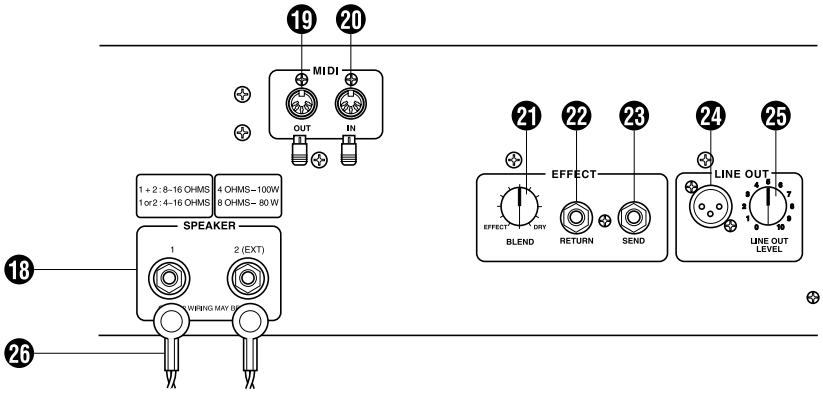

⓲ Speaker Jacks (SPEAKER1, 2 (EXT))
⓳ MIDI OUT Jack
⓴ MIDI IN Jack
㉑ Effect Blend Control (EFFECT BLEND)
㉒ Effect Return Jack (EFFECT RETURN)
㉓ Effect Send Jack (EFFECT SEND)
㉔ Line Out Jack (LINE OUT)
㉕ Line Out Level Control (LINE OUT LEVEL)
㉖ Speaker Plug

Downloaded from www.Manualslib.com manuals search engine

■ CIRCUIT BOARD LAYOUT

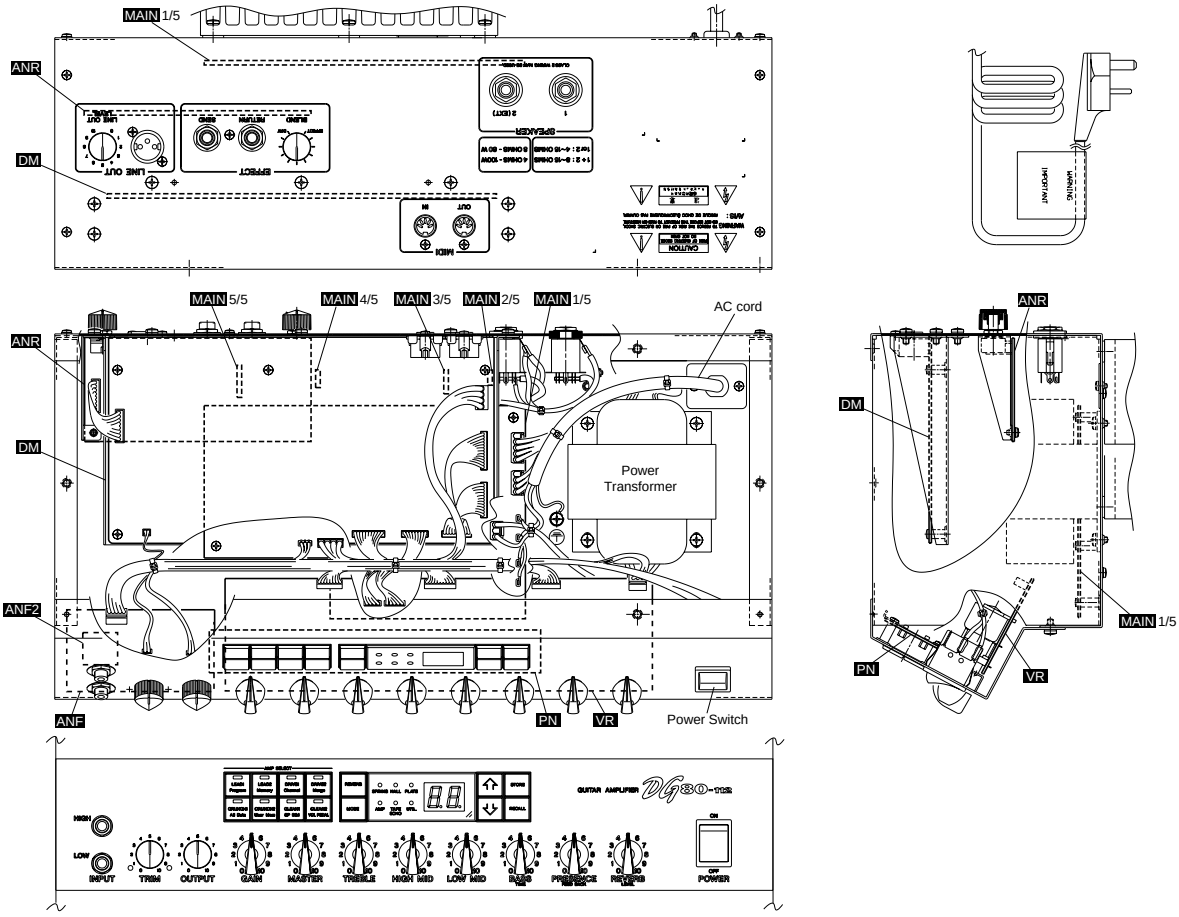

Downloaded from www.Manualslib.com manuals search engine

■ BLOCK DIAGRAM

KEC-54160△

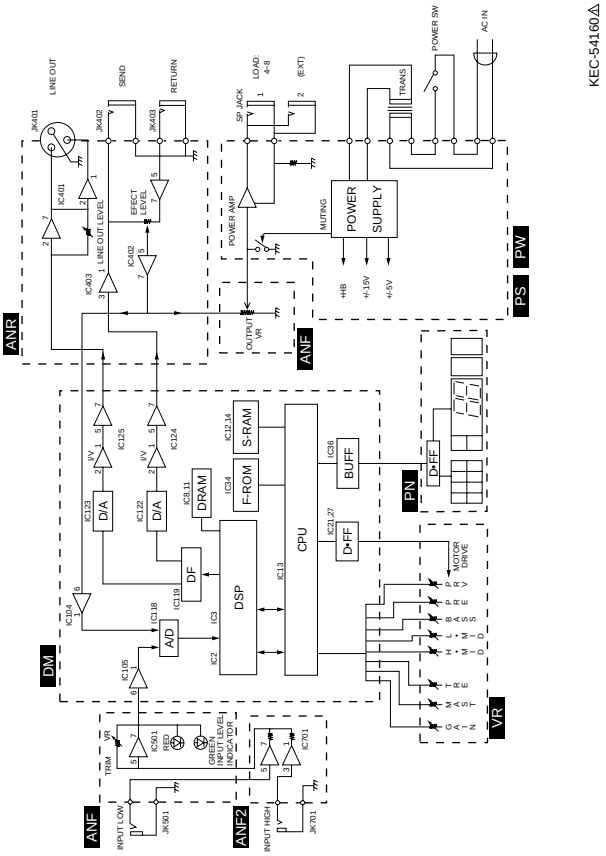

■ DISASSEMBLY PROCEDURE

1. Pre-Main Unit

1-1 Remove the four (4) screws marked [70]. The back board (U) can then be removed. (Fig. 1)

1-2 Remove the plug of the connector assembly (speaker) located on the rear panel and the six (6) screws marked [30A]. The pre-main unit can then be removed by sliding it backward. (Fig. 1, Fig. 2)

2. Speaker

2-1 Remove the pre-main unit. (See Procedure 1.)

2-2 Remove the four (4) hexagonal nuts with flanges marked [60A]. The speaker can then be removed. (Fig. 1)

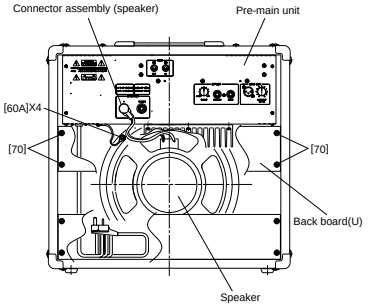

[60]: Hexagonal Nut 5.0 MFC2BL (20040400)

[70]: Oval Head Tapping Screw-1 4.0X30 MFC2BL (EN240090)

(Fig. 1)

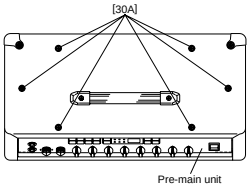

[30A]: Oval Head Screw 5.0X35 MFC2BL (VP104600)

(Fig. 2)

3. Front Panel Assembly

3-1 Remove the pre-main unit. (See Procedure 1.)

3-2 Remove the five (5) screws marked [30B]. The front panel assembly can then be removed. (Fig. 3)

Downloaded from www.Manualslib.com manuals search engine

4. DM Circuit Board

4-1 Remove the pre-main unit. (See Procedure 1.)
4-2 Remove the two (2) screws marked [150A] and the six (6) screws marked [40c]. The DM circuit board can then be removed. (Fig. 3)

5. Power Transformer

5-1 Remove the pre-main unit. (See Procedure 1.)
5-2 Remove the four (4) screws marked [80]. The Transformer can then be removed. (Fig. 3)

6. ANR Circuit Board

6-1 Remove the pre-main unit. (See Procedure 1.)
6-2 Remove the two (2) screws marked [150A] and the seven (7) screws marked [50]. The DM circuit board assembly can then be removed. (Fig. 3)
6-3 Remove the screw marked [30C], the two (2) screws marked [40], the two (2) knobs marked [60B] and the two (2) hexagonal nuts marked [A]. The ANR circuit board assembly can then be removed. (Fig. 3)
6-4 Remove the two (2) screws marked [20d]. The ANR circuit board can then be removed from the ANR circuit board assembly. (Fig. 3)

7. Main (1/5-2/5) Circuit Board

7-1 Remove the pre-main unit. (See Procedure 1.)
7-2 Remove the front panel assembly. (See Procedure 3.)
7-3 Remove the DM circuit board assembly. (See Procedure 6-2.)
7-4 Remove the ANR circuit board assembly. (See Procedure 6-3.)
7-5 Each circuit board can then be removed in its manner as below.

Main 1/5 Circuit Board
Remove the six (6) screws marked [60C]. The main 1/5 circuit board can then be removed. (Fig. 4)

Main 2/5 Circuit Board
Remove the screw marked [150B]. The main 2/5 circuit board can then be removed. (Fig. 4)

Main 3/5 Circuit Board
Remove the screw marked [150C]. The main 3/5 circuit board can then be removed. (Fig. 4)

Main 4/5 Circuit Board
Remove the screw marked [150D]. The main 4/5 circuit board can then be removed. (Fig. 4)

Main 5/5 Circuit Board
Remove the screw marked [150E]. The main 5/5 circuit board can then be removed. (Fig. 4)

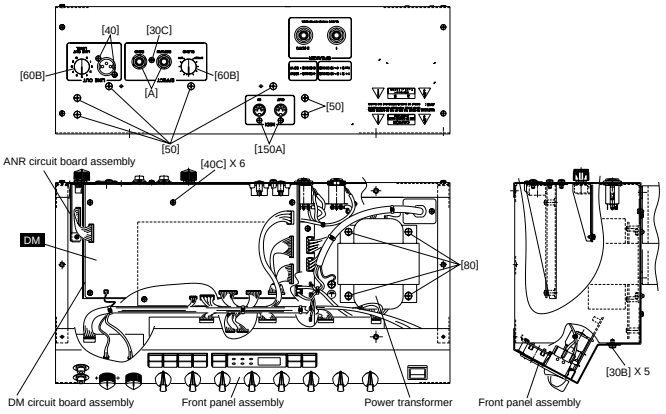

[30B]: Bind Head Screw A4.0X8 MFZN2BL (VP156800)
[30C]: Bind Head Screw A3.0X8 MFZN2BL (VP156700)
[40]: Bind Head Tapping Screw-B 3.0X8 MFZN2BL (EP600190)
[40c]: Bind Head Tapping Screw-B 3.0X6 MFZN2BL (EP600230)
[50]: Bind Head Screw A4.0X8 MFZN2BL (VP156800)
[80]: Bind Head Screw A4.0X8 MFZN2BL (VP156800)
[150A,B]:Bind Head Tapping Screw-B 3.0X8 MFZN2BL (EP600190)

(Fig. 3)

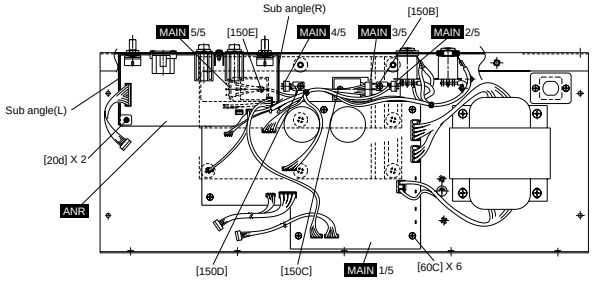

[20d]: Pan Head Screw SP3.0X8 MFZN2Y (EK400500)
[60C]: Bind Head Tapping Screw-B 3.0X6 MFZN2BL (EP600230)
[150B-E]:Pan Head Screw SP3.0X12 MFZN2Y (EL200070)

(Fig. 4)

Downloaded from www.Manualslib.com manuals search engine

8. PN Circuit Board

8-1 Remove the pre-main unit. (See Procedure 1.)
8-2 Remove the front panel assembly. (See Procedure 3.)
8-3 Remove the six (6) screws marked [90]. The PN circuit board assembly can then be removed. (Fig. 5)
8-4 Remove the seven (7) top cap assemblies from the PN circuit board assembly.

9. ANF Circuit Board

9-1 Remove the pre-main unit. (See Procedure 1.)
9-2 Remove the front panel assembly. (See Procedure 3.)
9-3 Remove the two (2) knobs marked [110], the two (2) hexagonal nuts marked [B] and the hexagonal nut marked [120A]. The ANF circuit board can then be removed. (Fig. 5)

10. ANF2 Circuit Board

10-1 Remove the pre-main unit. (See Procedure 1.)
10-2 Remove the hexagonal nut marked [120B]. The ANF2 circuit board can then be removed. (Fig. 5)

11. VR Circuit Board

11-1 Remove the pre-main unit. (See Procedure 1.)
11-2 Remove the front panel assembly. (See Procedure 3.)
11-3 Remove the eight (8) knobs marked [100] and the four (4) screws marked [30D]. The VR circuit board assembly can then be removed. (Fig. 5)
11-4 Remove the eight (8) hexagonal nuts marked [C]. The VR circuit board can then be removed from the VR circuit board assembly. (Fig. 6)

12. Replacement of The Lithium Battery

12-1 Remove the pre-main unit. (See Procedure 1.)
12-2 The lithium battery marked [D], on the DM circuit board, can be replaced.

Battery VS246400
VS246300(Battery holder for VS246400)

- Notice for back-up battery removal
  Push against the holder hook, then the battery will pop up.
- Druk tegen de houder, de batterij springt dan naar voren.

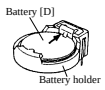

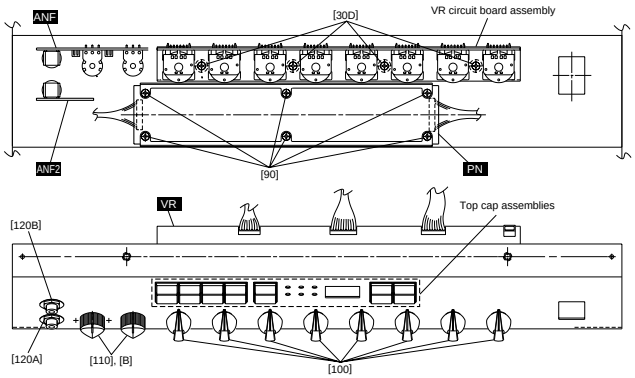

[30D]: Bind Head Tapping Screw-B 3.0X6 MFZN2BL (EP600230)
[90]: Bind Head Tapping Screw-B 3.0X6 MFZN2BL (EP600230)
[120A,B]:Hexagonal Nut 9.0X12X2 MFNI33 (LX200060)

(Fig. 5)

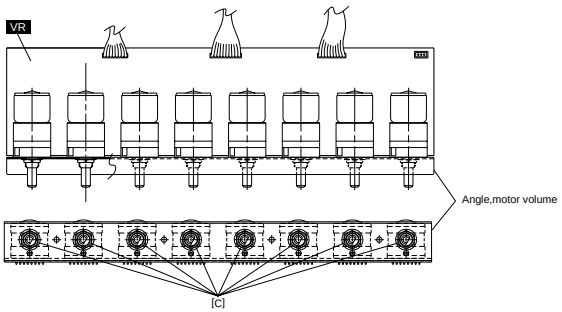

(Fig. 6)

Downloaded from www.Manualslib.com manuals search engine

■ LSI PIN DESCRIPTION

● **HD6413002FP16** (XQ375A00) **CPU** <H8/3002> DM : IC13

PIN NO.	NAME	I/O	FUNCTION	PIN NO.	NAME	I/O	FUNCTION
1	PA6	O	Port A	51	A12	O	Address bus
2	PA7	O	Address bus	52	A13	O	
3	VCC		Power supply	53	A14	O	
4	PB0	I	Port B	54	A15	O	
5	PB1	I		55	A16	O	
6	PB2	I		56	A17	O	
7	PB3	I		57	A18	O	
8	PB4	I		58	A19	O	
9	PB5	I		59	VSS		Ground
10	PB6//DREQ0	I		60	P60//WAIT	I	Port 6
11	PB7//DREQ1	I		61	P61//BREQ	I	
12	/RESO	O	Reset	62	P62//BACK	I	
13	VSS		Ground	63	Ø	O	Ø out
14	P90/TXD0	O	Transmit data (MIDI OUT)	64	/STBY	I	Stand-by mode signal
15	P91/TXD1	O	KSN-ACK	65	/RES	I	Reset
16	P92/RXD0	I	Receive data (MIDI IN)	66	NMI	I	Non-maskable interrupt
17	P93/RXD1	I	KSN-RX	67	VSS		Ground
18	P94/SCK0	O	Port 9	68	EXTAL	I	Clock
19	P95/SCK1	I	Port 9	69	XTAL	O	Clock
20	P40/D0	I/O	Data bus	70	VCC		Power supply
21	P41/D1	I/O		71	/AS	O	Address strobe
22	P42/D2	I/O		72	/RD	O	Read strobe
23	P43/D3	I/O		73	/HWR	O	Write strobe (High)
24	VSS		(Ground)	74	/LWR	O	Write strobe (Low)
25	P44/D4	I/O		75	MD0	I	Mode select
26	P45/D5	I/O		76	MD1	I	
27	P46/D6	I/O		77	MD2	I	
28	P47/D7	I/O		78	AVCC		Analog power supply
29	D8	I/O		79	VREF	I	Reference voltage
30	D9	I/O		80	P70/AN0	I	Analog data input (EQ)
31	D10	I/O		81	P71/AN1	I	Analog input (EQ)
32	D11	I/O		82	P72/AN2	I	Analog data input
33	D12	I/O		83	P73/AN3	I	Analog input (CS)
34	D13	I/O		84	P74/AN4	I	Analog data input (BEND)
35	D14	I/O		85	P75/AN5	I	Analog input (MOD)
36	D15	I/O		86	P76/AN6	I	Analog input (FC)
37	VCC		Power supply	87	P77/AN7	I	Analog input (BAT)
38	A0	O	Address bus	88	AVSS		Analog ground
39	A1	O		89	P80	O	Port 8
40	A2	O		90	P81//CS3	O	Chip select
41	A3	O		91	P82//CS2	O	
42	A4	O		92	P83//CS1	O	
43	A5	O		93	P84//CS0	O	
44	A6	O		94	VSS		Ground
45	A7	O		95	PA0	I	Port A
46	VSS		(Ground)	96	PA1	I	
47	A8	O		97	PA2	I	
48	A9	O		98	PA3	O	
49	A10	O		99	PA4	O	
50	A11	O		100	PA5	O	

Downloaded from www.Manualslib.com manuals search engine

● **YSS228E-F** (XQ962D00) DSP3 (Digital Signal Processor) DM : IC2, 3

PIN NO.	NAME	I/O	FUNCTION	PIN NO.	NAME	I/O	FUNCTION
1	VSS		Ground	81	VSS	I/O	Ground
2	XI	I	System master clock input (60 M or30 MHz)	82	DB13	I/O	
3	XO		System master clock input (60 M or30 MHz)	83	DB14	I/O	
4	VDD		Power supply	84	DB15	I/O	
5	/SYNCI	I	System synch. input	85	DB16	I/O	
6	/SYNCO	O	System synch. output	86	DB17	I/O	
7	CKI	I	System clock input (30 MHz)	87	DB18	I/O	
8	CKO	O	System clock output (30 MHz)	88	DB19	I/O	
9	CKSL	I	System master clock select (0:60 M,1:30 MHz)	89	DB20	I/O	
10	VSS		Ground	90	DB21	I/O	
11	MCKS	I	Master clock for serial I/O(128 xFs)	91	DB22	I/O	Parallel data bus
12	/SSYNC	I	Synch. signal for serial I/O	92	DB23	I/O	
13	/IC	I	Initial clear	93	DB24	I/O	
14	/TEST	I	Test mode setting	94	DB25	I/O	
15	BTYP	I	CPU data bus 8/16 bit select(0:8,1:16)	95	DB26	I/O	
16	/IRQ	O	Interrupt request	96	DB27	I/O	
17	TRIG	I/O	Trigger signal	97	DB28	I/O	
18	VDD		Power supply	98	DB29	I/O	
19	VSS		Ground	99	DB30	I/O	
20	/CS	I	Chip select	100	DB31	I/O	
21	/DS	I	Data strobe	101	TIMO/DBOE	I/O	Timing signal/Parallel data bus control
22	R/W	I	Read/Write select	102	VSS		Ground
23	CA7	I		103	VDD		Power supply
24	CA6	I		104	DA00	I/O	
25	CA5	I		105	DA01	I/O	
26	CA4	I	CPU address bus	106	DA02	I/O	
27	CA3	I		107	DA03	I/O	
28	CA2	I		108	DA04	I/O	
29	CA1	I		109	DA05	I/O	
30	CA0/CD15	I/O	CPU address/data bus	110	DA06	I/O	
31	CD14	I/O		111	DA07	I/O	External memory data bus
32	CD13	I/O		112	DA08	I/O	
33	CD12	I/O		113	DA09	I/O	
34	CD11	I/O		114	DA10	I/O	
35	CD10	I/O	CPU data bus	115	DA11	I/O	
36	CD09	I/O		116	DA12	I/O	
37	CD08	I/O		117	DA13	I/O	
38	CD07	I/O		118	DA14	I/O	
39	CD06	I/O		119	DA15	I/O	
40	VSS		Ground	120	VSS		Ground
41	VDD		Power supply	121	VDD		Power supply
42	CD05	I/O		122	DA16	I/O	
43	CD04	I/O		123	DA17	I/O	
44	CD03	I/O	CPU data bus	124	DA18	I/O	
45	CD02	I/O		125	DA19	I/O	
46	CD01	I/O		126	DA20	I/O	
47	CD00	I/O		127	DA21	I/O	
48	/DTACK	O	DTACK signal output	128	DA22	I/O	
49	SI0	I		129	DA23	I/O	External memory data bus
50	SI1	I		130	DA24	I/O	
51	SI2	I		131	DA25	I/O	
52	SI3	I	Serial data input	132	DA26	I/O	
53	SI4	I		133	DA27	I/O	
54	SI5	I		134	DA28	I/O	
55	SI6	I		135	DA29	I/O	
56	SI7	I		136	DA30	I/O	
57	VSS		Ground	137	DA31	I/O	
58	VDD		Power supply	138	VDD		Power supply
59	SO0	O		139	VSS		Ground
60	SO1	O		140	A00	O	
61	SO2	O		141	A01	O	
62	SO3	O	Serial data output	142	A02	O	
63	SO4	O		143	A03	O	
64	SO5	O		144	A04	O	
65	SO6	O		145	A05	O	
66	SO7	O		146	A06	O	
67	DB00	I/O		147	A07	O	External memory address bus
68	DB01	I/O		148	A08	O	
69	DB02	I/O		149	A09	O	
70	DB03	I/O		150	A10	O	
71	DB04	I/O		151	A11	O	
72	DB05	I/O		152	A12	O	
73	DB06	I/O	Parallel data bus	153	A13	O	
74	DB07	I/O		154	A14	O	
75	DB08	I/O		155	A15/RAS	O	External memory address bus/Row address strobe
76	DB09	I/O		156	A16/CAS	O	External memory address bus/Column address strobe
77	DB10	I/O		157	A17/CE	O	External memory address bus/Chip enable
78	DB11	I/O		158	/WE	O	External memory write enable
79	DB12	I/O		159	/OE	O	External memory output enable
80	VDD		Power supply	160	VDD		Power supply

Downloaded from www.Manualslib.com manuals search engine

● **YSF210-M** (XK280A00) Digital Filter DM : IC119

PIN NO.	NAME	I/O	FUNCTION	PIN NO.	NAME	I/O	FUNCTION
1	XO	O	System clock	13	OBIT1	I	Output bit selection
2	XI	I		14	OBIT2	I	
3	VSS2		Ground				
4	BCI	I	Bit clock				
5	SDSY	I	L/R select and input timing	15	NC	-	No connection
6	IBIT1	I	Input bit selection	16	ASY	I	Synchronous/Asynchronous system clock section
7	IBIT2	I					
8	IBIT3	I		17	VSS1		Ground
				18	BCO	O	Bit clock of DLO, DRO
				19	WCO	O	Word clock of DLO, DRO
9	MUTE	I	Mute	20	SHL	O	Deglich signal of L/R channel
10	NC	-	No connection	21	DRO	O	Output data of R channel
11	SDI	I	Input data	22	NC	-	No connection
12	VDD2		Power supply	23	DLO	O	Output data of L channel
				24	VDD1		Power supply

Input bit selection

	22 bit	20 bit	18 bit	16 bit	AV DSP	MEL
IBIT 1	H	L	H	L	H	H
IBIT 2	H	H	L	L	H	H
IBIT 3	H	H	H	H	L	L

Output bit selection

	22 bit	20 bit	18 bit	no output
OBIT 1	H	L	H	L
OBIT 2	H	H	L	L

● **AK5390-VP** (XQ199A00) ADC (Analog.Digita Converter) DM : IC118

PIN NO.	NAME	I/O	FUNCTION	PIN NO.	NAME	I/O	FUNCTION
1	AGND		Analog ground	15	SDATA	O	Serial data output
2	APD	I		16	FSYNC	I/O	Frame synch. clock
3	AINL+	I	Analog signal input (L channel -)	17	VD+		Digital power supply (+)
4	AINL-	I	Analog signal input (L channel +)	18	DGND		Digital ground
5	ACAL	I	Analog calibration	19	CLK	I	Master clock
6	LGND		Analog logic ground	20	OCLK	O	128 fs clock output
7	VL+		Analog logic power supply	21	NC		
8	NC			22	ICLK	I	128 fs clock input
9	DACL	O	Digital calibration	23	VA+		Analog power supply (+)
10	DPD	I	Digital power down	24	VA-		Analog power supply (-)
11	CMODE	I	Master clock select (L: CLK=256 fs, H:CLK=384 fs)	25	AINR-	I	Analog signal input (R channel -)
12	SMODE	I	Interface clock select (L: slave mode, H: master mode)	26	AINR+	I	Analog signal input (R channel +)
13	L//R	I/O	Input channel select	27	VREF-	O	Reference voltage (-)
14	SCLK	I/O	Serial data clock	28	VREF+	O	Reference voltage (+)

● **PCM1702P** (XN136A00) DAC (Digital to Analog Converter) DM : IC122, 123

PIN NO.	NAME	I/O	FUNCTION	PIN NO.	NAME	I/O	FUNCTION
1	DATA	I	Serial data input	9	+Vcc		Analog power supply (+5 V)
2	CLOCK	I	Bit clock	10	BPO DC	I/O	BPO decouple
3	+Vdd		Digital power supply (+5 V)	11	I OUT	O	Current output
4	DGND	I	Digital ground	12	AGND		Analog ground
5	-Vdd		Digital power supply (-5 V)	13	AGND		Analog ground
6	LE	I	Latch enable	14	SERVO DC	I/O	Servo decouple
7	NC		Reserved	15	REF DC	I/O	Ref. decouple
8	NC		Reserved	16	-Vcc		Analog power supply (-5 V)

Downloaded from www.Manualslib.com manuals search engine

■ IC BLOCK DIAGRAM

- **TCHCU04AF-TP1**(XD660A00)
  Hex Inverter
  DM : IC 101

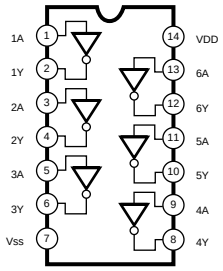

- **SN74HC08NSR**(XD831A00)
  Quad 2 Input AND
  DM : IC 33

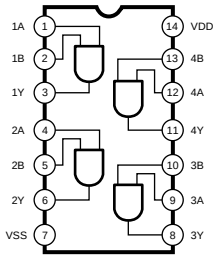

- **TC74VHC32F**(XN963A00)
  Quad 2 Input OR
  DM : IC 28, 29

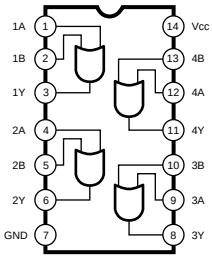

- **TC74HC157AF-TP1**(XH603A00)
  Quad 2 to 1 Multiplexer
  DM : IC 18

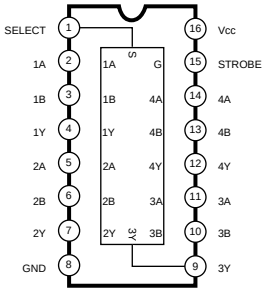

- **TC74HC164AF**(XQ967A00)
  8-Bit Shift Register
  DM : IC 110

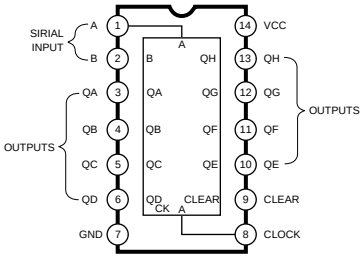

- **TC74HC175AF -TP1**(XD658A00)
  Quad D-Type Flip-Flop
  DM : IC 117

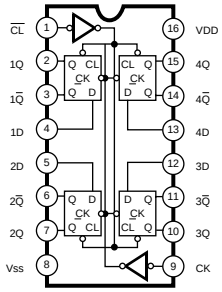

- **SN74HC244NSR**(XD233A00)
  Octal 3-State Bus Buffer
  DM : IC 35, 36

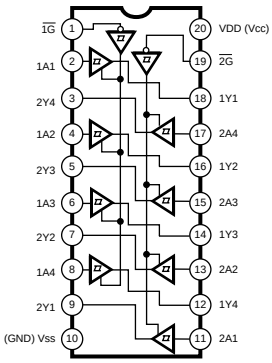

- **SN74HC374ANSR**(XQ042A00)
  Octal 3-State D-Type Flip-Flop
  DM : IC 21, 27
  DN : IC 202 – 205

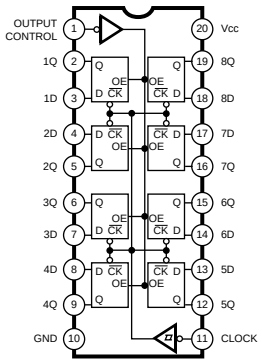

- **TC74HC4040F**(XR684A00)
  12-Stage Binary Ripple Counter
  DM : IC 102

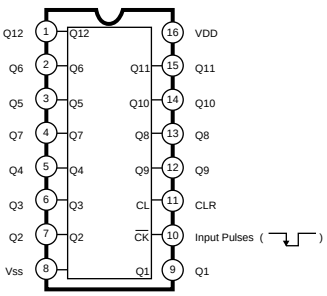

Downloaded from www.Manualslib.com manuals search engine

- **NE5532P**(IG102500)
  Dual Operational Amplifier
  DM : IC 104, 105, 124, 125

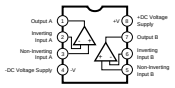

- **NJM072D**(IG107000)
  Dual Operational Amplifier
  ANF : IC 501 ANF2 : IC 701
  ANR : IC 401 – 403

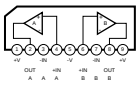

- **MB3790PF**(XR967A00)
  ASSP
  DM : IC 19

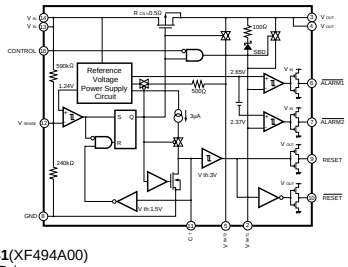

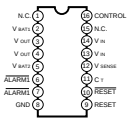

- **LB1641**(XF494A00)
  Motor Driver
  VR : IC 601 – 608

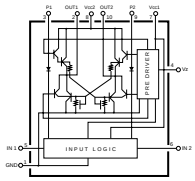

Downloaded from www.Manualslib.com manuals search engine

■ TEST PROGRAM

A. SET-UP

1. If no specific frequency is required, set the test frequency at 1 kHz.
2. If no specific TRIM and OUTPUT settings are required, set the volumes of TRIM and OUTPUT at maximum.
3. Before turning the [POWER] switch on, set the Idling Adjustment Volume (VR303, 470 ohms) at minimum.

B. HOW TO ENTER THE TEST PROGRAM

While simultaneously pressing the [MODE], the [REVERB] and the [DRIVE2] switches, turn the [POWER] switch on. The DG80-112 will enter the self test mode.

C. FACTORY PRESET OF RAM

While simultaneously pressing the [LEAD1] and the [RECALL] switches, turn [POWER] switch on. The RAM will be cleared, the factory setting data are restored on the RAM, and the DG80-112 will enter the normal mode.

D. PROCEEDING THROUGH THE TESTS

1. Switch Functions

Increment :	test no. select upward
Decrement :	test no. select downward
RECALL :	start of the selected test
STORE :	exit (in case of error)
LEAD1 – CLEAN2 :	no effect
REVERB, MODE :	no effect

2. LED Display Functions

When the DG80-112 is in the self test mode, the LED display shows the number for the status as below.

Function (status)	LED display	
	upper num.	lower num.
test no. selection	(test no.)	(blank)
test execution	(test no.)	(check no.)
ok	***8.***	***8.***
error	***E***	(error no.)

If the LED displays "***E***" and "(error no.)", the DG80-112 status can be changed to "test no. selection" by pressing the [STORE] key. When the status has been changed, the LED display shows a next test no.
When the DG80-112 is in "test no. selection", the test no. can be changed by using the increment and the decrement keys.

E. TEST PROGRAM

(Relay Check)
Check that the relay is switched ON within 2 – 3 minutes after the [POWER] switch is turned on.

(Menu of Test Program)

0. LED Check
1. Switch Check
2. Motor Drive Volume check
3. Volume Center Check
4. Battery Check
5. MIDI Check
6. SRAM Check
7. Flash Memory Erase/Write Check
8. Sound Check
9. TEST END

0. LED Check

(Test Contents)
When the DG80-112 enters the self test mode, the LED Check is started and the LEDs light automatically for the check in the sequence as below.

- All the LEDs light simultaneously.
- All the LEDs go out simultaneously.
- The LEDs light one by one in the sequence as below.

LEAD1 Program
LEAD2 Memory
DRIVE1 Channel
DRIVE2 Merge
CRUNCH1 All Data
CRUNCH2 User Mem.
CLEAN1 SP SIM
CLEAN2 VOL PEDAL
SPRING
HALL
PLATE
AMP
TAPE ECHO
UTIL.

LED display upper num.	top
LED display upper num.	right upper
LED display upper num.	right lower
LED display upper num.	bottom
LED display upper num.	left lower
LED display upper num.	left upper
LED display upper num.	center
LED display upper num.	dot
LED display lower num.	top
LED display lower num.	right upper
LED display lower num.	right lower
LED display lower num.	bottom
LED display lower num.	left lower
LED display lower num.	left upper
LED display lower num.	center
LED display lower num.	dot

- All the LEDs go out simultaneously
- All the LEDs light simultaneously

The LED Check is finished and the DG80-112 selects the next test no., so the LED shows a "***1***".

(Error Number)
not appearing

1. Switch Check

Press the [RECALL] key when the LED display shows "***1***". The Switch Check is started and the LED display shows the first check number "***11***".

(Test Contents)
Press the keys according to the LED display guide in the order as below.
(The Exit function of the [STORE] key is available on the error status.)

11	LEAD1 Program Switch
12	LEAD2 Memory Switch
13	DRIVE1 Channel Switch
14	DRIVE2 Merge Switch
15	CRUNCH1 All Data Switch
16	CRUNCH2 User Mem. Switch
17	CLEAN1 SP SIM Switch
18	CLEAN2 VOL PEDAL Switch
19	REVERB Switch
1A	MODE Switch
1B	Increment Switch
1C	Decrement Switch
1D	STORE Switch
1E	RECALL Switch

When all the LEDs display light simultaneously, the Switch Check is finished. Then the DG80-112 selects the next test no., so the LED display shows a "***2***".

(Error Number)
E1 – ***EE***
The switch corresponding to the error number has a problem or the wrong switch was pressed.

2. Motor Drive Volume Check

Press the [RECALL] key when the LED display shows "***2***". The Motor Drive Volume Check is started and the LED display shows the first check number "***21***".

(Test Contents)
Once the Motor Drive Check has been started, all the volumes rotate automatically as below.

21	to the Minimum
22	to the Maximum
23	to the Center

When all the LEDs light simultaneously, the Volume Check is finished. Then the DG80-112 selects the next test no., so the LED display shows a "***3***".

(Error Number)
E0 – ***E3***
If a Motor Drive Volume Check operation has not been finished in 20 seconds, the LED display shows "***E0*** – "***E3***" by replacing "***2***" to "***E***".

3. Volume Center Check

Press the [RECALL] key when the LED display shows "***3***", and the Volume Check is started and the LED display shows one of the numbers from "***31***" to"***38***".

(Test Contents)
Select the knob that requires adjustment and turn it until the LED display shows the next volume check number.

33	TREBLE
34	HIGH MID
35	LOW MID
36	BASS
37	PRESENCE

The A/D converter value is shown with binary digits by using the AMP SELECT LEDs. Set the knob to the center and turn the trimmer potentiometer to adjust the AMP SELECT LEDs as shown on the list below.

AMP SELECT	LEAD1 Program	LEAD2 Memory	DRIVE1 Channel	DRIVE2 Merge
LED	On	Off	Off	Off

AMP SELECT	CRUNCH1 All Data	CRUNCH2 User Mem.	CLEAN1	CLEAN2
LED	Off	Off	Off	Off

If the knob data is the same as the data of the list above, the adjustment of that knob can be passed. The trimmer potentiometer numbers are shown below.

TREBLE :	VR603
HIGH MID :	VR605
LOW MID :	VR607
BASS :	VR609
PRESENCE :	VR611

Once the required Volume Center Check has been finished, press the [RECALL] key and the DG80-112 selects the next test no., so the LED display shows "***4***".

(Error Number)
not appearing

4. Battery Check

Press the [RECALL] key when the LED display shows '5". The Battery Check is started.

(Test Contents)
The RAM Backup Battery check is executed automatically.

Downloaded from www.Manualslib.com manuals search engine

When all the LEDs light simultaneously, the Battery Check is finished. Then the 80-112 selects the next test no., so the LED display shows "***5***".

(Error Number)

E0 : Battery Low (RAM DATA are kept.)
E1 : Unknown Error
E2 : Battery Low (RAM DATA are not kept.) or Not Installed

5. MIDI Check

Connect the MIDI IN and the MIDI OUT terminals with a MIDI cable. Press the [RECALL] key when the LED display shows "***5***". The MIDI Check is started.

(Test Contents)

The loop back MIDI check is executed automatically. When the MIDI check is started, the LED display shows "***51***" and then "***52***". When all the LEDs light simultaneously, the MIDI Check is finished. Then the DG80-112 selects the next test no., so the LED display shows "***6***".

(Error Number)

E0 : MIDI Error
E1 : MIDI Error

6. SRAM Check

Press the [RECALL] key when the LED display shows "***6***". The SRAM Check is started.

(Test Contents)

The SRAM read/write check is executed automatically.
When the SRAM Check is started, the LED display shows "***61***" and then "***62***". When all the LEDs light simultaneously, the SRAM Check is finished. Then the DG80-112 selects the next test no., so the LED display shows "***7***".

(Error Number)

E0 **:** RAM Address Error
E1 **:** RAM Read/Write Error

7. Flash Memory Erase/Write Check

Press the [RECALL] key when the LED display shows "***7***". The Flash Memory Erase/Write Check is started.

(Attention)

When the result of the test number 6 has alredy been "Error", don't execute this test, or the DG80-112 won't set up at normal mode by the rewrited wrong data in the Flash Memory.
Don't turn the [POWER] switch off while executing this test, the DG80-112 won't set up at normal mode by no data in the Flash Memory.

(Test Contents)

The Flash Memory Erase/Write check is executed automatically.
When the check is started, the LED display shows from "***70***" to "***73***" successively. When all the LEDs light simultaneously, the Flash Memory Erase/Write check is finished. Then the DG80-112 selects the next test no., so the LED display shows "***8***".

(Error Number)

E0, E1 : Flash Erase Error
E2, E3 : Flash Write Error

8. Sound Check

Before executing this sound check, the idling adjustment, the output wave adjustment and center voltage adjustment must be finished. the three adjustments can be done while the LED display shows "***8***".

(Idling Adjustment)

1. Set the idling adjustment volume (VR303) at minimum.
2. Connect the 4 ohm load to the speaker terminals.
3. Set the output volume at minimum.
4. Adjust the VR303 so that the DC voltage between the terminals of the RA301 should be 5 +/-1 mV.

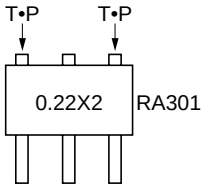

(Output Wave Adjustment)

1. After adjusting the idling adjustment, set the OUTPUT VR at maximum.
2. When the signal of -2 dBm / 1 kHz is inputted from the RETURN terminal, adjust the VR 301 (4.7 k ohms) so that the wave shape should be a sine wave symmetrical for upper and lower as below.

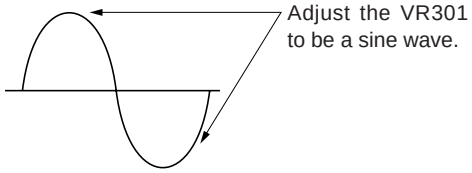

(Center Voltage Adjustment)

1. Adjust the VR302 so that the voltage of the output circuit (RA301) should be 38 +/- 2 V.

* By adjusting the output adjustment and the center voltage adjustment alternatively, search the best point.
After finishing the adjustments above, press the [RECALL] key when the LED display shows "***8***". The Sound Check is started.

Downloaded from www.Manualslib.com manuals search engine

(Test Contents)

The DG80-112 sets the conditions for the signal Sound Check through the analogue circuit, the A/D converter, the DSP-3 and the D/A Converter.

When the Sound Check is started, the LED display shows "***81***". The Sound Check has two conditions. If the [RECALL] key is pressed when the LED display shows "***81***", the LED display changes to "***82***" and the condition changes to the next as below.

81 : DSP3-1
82 : DSP3-2

Check the following items in each condition of "***81***" and "***82***".

Items	Conditions	Responses (standards)
1. Input Sensitivity (High)	1 kHz, -30 dBm	+28 dBm +/-2 dB
2. Input Sensitivity (Low)	1 kHz, -20 dBm	+28 dBm +/-2 dB
3. RETURN Level	1 kHz, 0 dBm	+28 dBm +/-2 dB
4. SEND Level	Condition of 1. and 100 k ohms SEND load	-1 dBm +/-2 dB
5. LINE OUT Level	Condition of 1. and 100 k ohms LINE OUT load	+3 dBm +/-2 dB
6. Frequency Response (HIGH IN)	-40 dBm Input 1 kHz standard SP Output Terminal	100 Hz: 0.5 +/-1 dB 10 kHz: 0.5 +/-1 dB
7. Remain Noise	TRIM, OUTPUT VR MIN IHF A net	less than -60 dBm
8. Sensitivity of LED for Input Level	Lo Input TRIM Vol: maximum OUTPUT Vol: maximum	Input LED -30 dBm: no light -20 dBm: GR only +4 dBm: both lit
9. Output	RETURN,10 %THD	more than +28 dBm (95 W)

* 0 dBm = 0.775 V Load = 4 ohms

If the Sound Check has been finished, press the [RECALL] key when the LED display shows "***82***". The LED display shows "***9***".

(Error Number)

not appearing

9. TEST END

A "***9***" on the LED display signals the end of the TEST and the exit of the Test Program. Press the [RECALL] key when the LED display shows "***9***". The mode of the DG80-112 changes to the normal mode and all of the function data are set to the condition of the latest program number in normal mode. The Motor Drive Volumes rotate automatically to the settings of that data.

Downloaded from www.Manualslib.com manuals search engine

■ ERROR MESSAGES

If an error occurs during operation, one of the following error message numbers will appear on the display.

E 1 : Motor Drive Error

CAUSE: The volume knob has not returned to its assigned position after 20 seconds has elapsed from the start of the recall operation or, the device does not recognize the recall command.

SOLUTION: Turn off the power and check the circuit for Motor Drive.

E 2 : MIDI Receive Buffer Full

CAUSE: Too much MIDI data is being received by the DG80-112 at one time.

SOLUTION: Try reducing the amount of data being sent or, break the data into smaller blocks.

E 3 : Communication Error

CAUSE: An abnormality is detected during MIDI communications.

SOLUTION: Check all connections, etc. and try again.

E 4 : Bulk Receive Check Sum Error

CAUSE: The check sum does not match the received MIDI bulk data.

SOLUTION: Check all connections and data, and try again.

E 5 : Bulk Receive Data Abnormality

CAUSE: An abnormality is detected in the received MIDI bulk data.

SOLUTION: Check all connections and data, and try again.

E 6 : Backup Battery Error

CAUSE: Backup battery power is depleted.

SOLUTION: Continued use of the device will result in the loss of data. Replace the battery with a new one.

Downloaded from www.Manualslib.com manuals search engine

YAMAHA [Digital Guitar Amplifier] Date:1-Dec-1998
Model DG80-112 MIDI Implementation Chart Version : 1.0

Function ...		Transmitted	Recognized	Remarks
Basic	Default	x	1 - 16, off	memorized
Channel	Changed	x	1 - 16, off	
Mode	Default	x	1,3	memorized
	Messages	x	x	
	Altered	**********	x	
Note Number		x	x	
	True voice	**********	x	
Velocity	Note ON	x	x	
	Note OFF	x	x	
After Touch	Key's	x	x	
	Ch's	x	x	
Pitch Bender		x	x	
Control Change	0 - 6	x	x	
	7	x	o	Main Volume
	8 - 90	x	x	
	91	x	o	Reverb SW.
	92,93	x	x	
	94	x	o	Tape Echo SW.
	95 - 127	x	x	
Prog Change		x	o 0 - 127	Program Change Number 1-128
	True #	**********		
System Exclusive		o	o	Bulk Dump
System common	Song Pos.	x	x	
	Song Sel.	x	x	
	Tune	x	x	
System Real Time	Clock	x	x	
	Commands	x	x	
Aux Mes- sages	All Sound OFF	x	x	
	Reset All Cntrls	x	x	
	Local ON/OFF	x	x	
	All Notes OFF	x	x	
	Active Sense	o	x	
	Reset	x	x	

Mode 1 : OMNI ON, POLY Mode 2 : OMNI ON, MONO o : Yes
Mode 3 : OMNI OFF, POLY Mode 4 : OMNI OFF, MONO x : No

Downloaded from www.Manualslib.com manuals search engine

■ CIRCUIT BOARDS

• **DM Circuit Board**

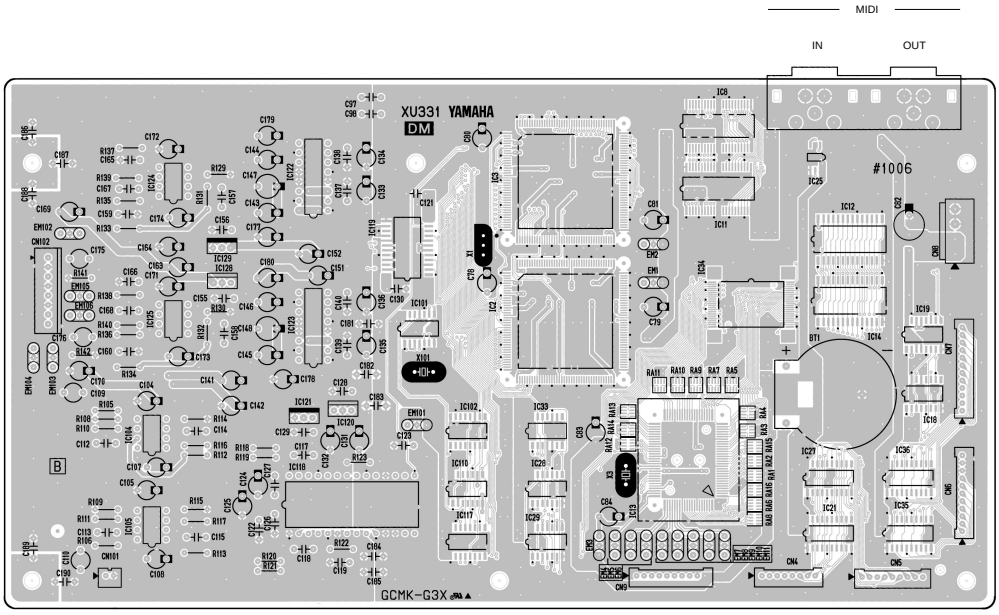

Component side

Note : See parts list for details of circuit board component parts.

Downloaded from www.Manualslib.com manuals search engine

• **DM Circuit Board**

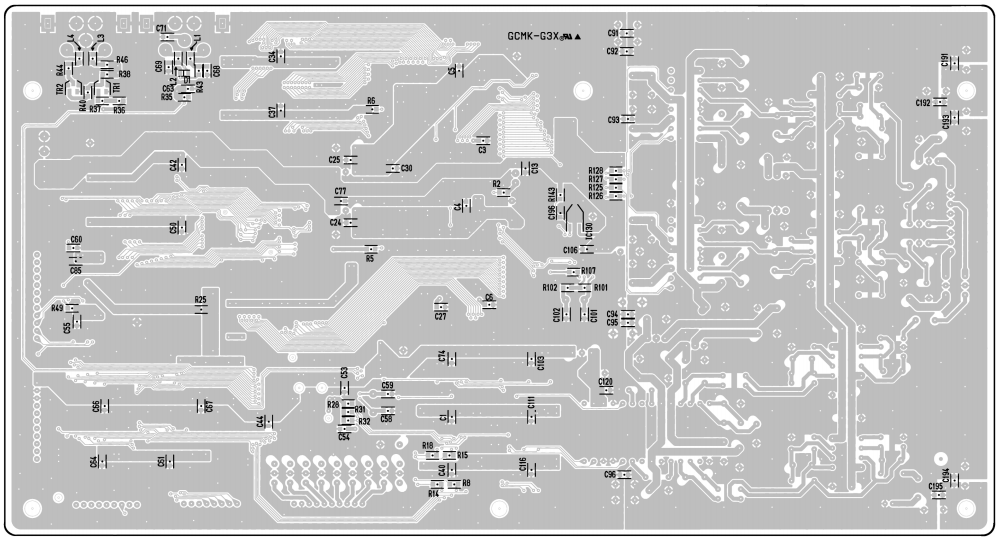

Pattern side

Note : See parts list for details of circuit board component parts.

Downloaded from www.Manualslib.com manuals search engine

• PN Circuit Board

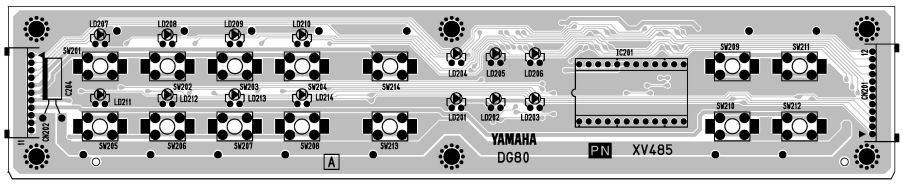

Component side

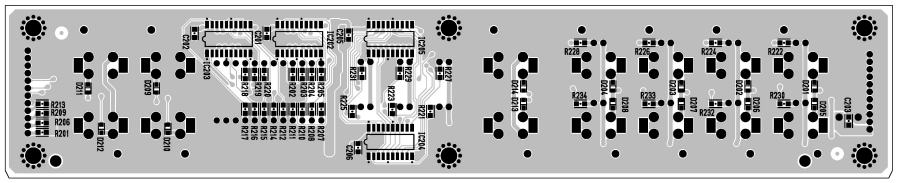

Pattern side

• Panel Layout

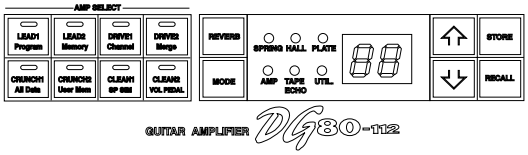

• VR Circuit Board

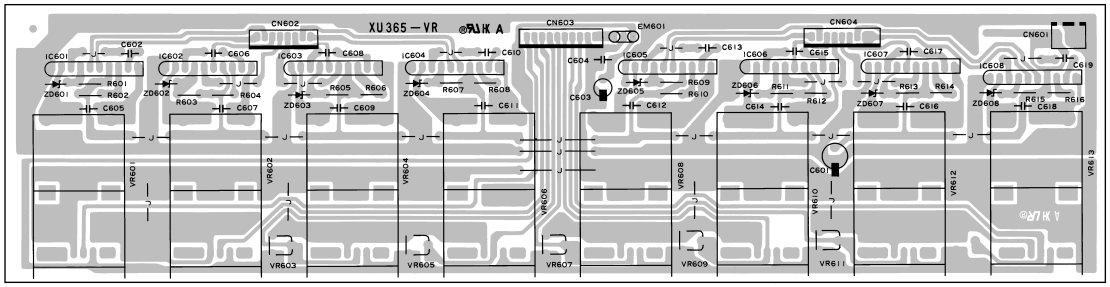

Component side

Note : See parts list for details of circuit board component parts.

PN : CNA-V297070-1/5⚠,2/5⚠
VR : CNA-V297690-1/10⚠

Downloaded from www.Manualslib.com manuals search engine

• MAIN Circuit Board

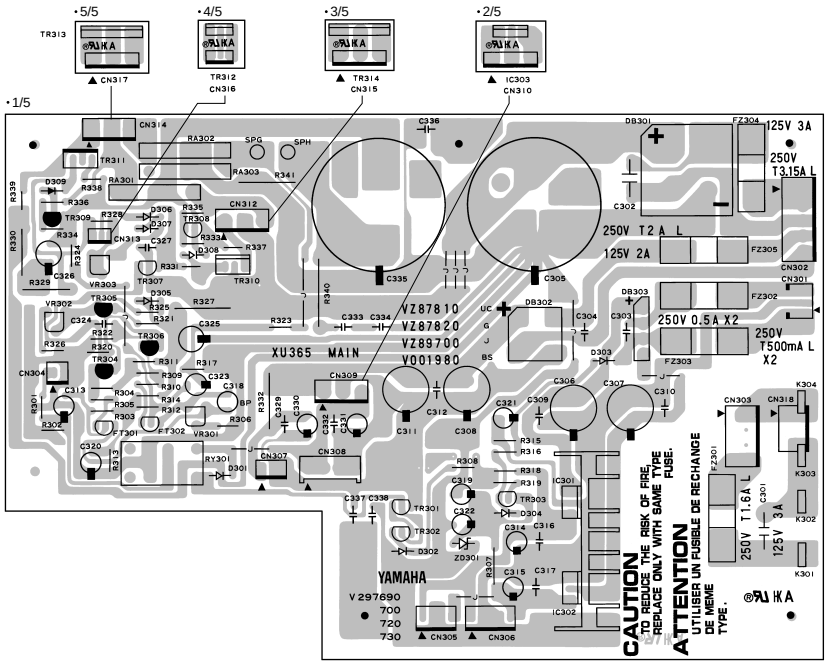

Component side

Note : See parts list for details of circuit board component parts.

• ANR Circuit Board

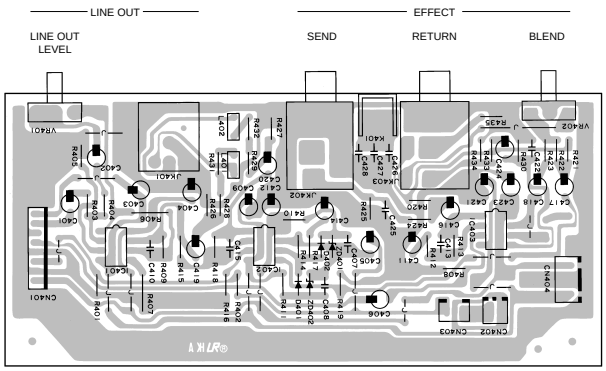

Component side

• ANF2 Circuit Board

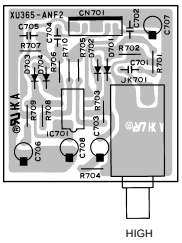

Component side

• ANF Circuit Board

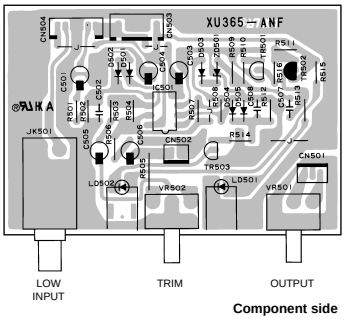

Component side

CNA-V297690-1/10⚠

Downloaded from www.Manualslib.com manuals search engine

GUITAR AMPLIFIER

DG80-112

PARTS LIST

CONTENTS

OVERALL ASSEMBLY 2
PRE-MAIN UNIT 4
FRONT PANEL ASSEMBLY 6
CHASSIS ASSEMBLY 8
OVERALL CABINET ASSEMBLY 10
ELECTRICAL PARTS ..... 11 ~ 20

Notes : DESTINATION ABBREVIATIONS

A	: Australian model	M	: South African model
B	: British model	O	: Chinese model
C	: Canadian model	Q	: South-east Asia model
D	: German model	T	: Taiwan model
E	: European model	U	: U.S.A. model
F	: French model	V	: General export model (110V)
H	: North European model	W	: General export model (220V)
I	: Indonesian model	X	: General export model
J	: Japanese model	Y	: Export model

WARNING

Components having special characteristics are marked ⚠ and must be replaced with parts having specification equal to those originally installed.

- The numbers in " QTY " show quantities for each unit.
- The parts with " - - " in " PART NO. " are not available as spare parts.
- The mark " 〉 " in the remarks column indicates that these parts are interchangeable.

Downloaded from www.Manualslib.com manuals search engine

OVERALL ASSEMBLY

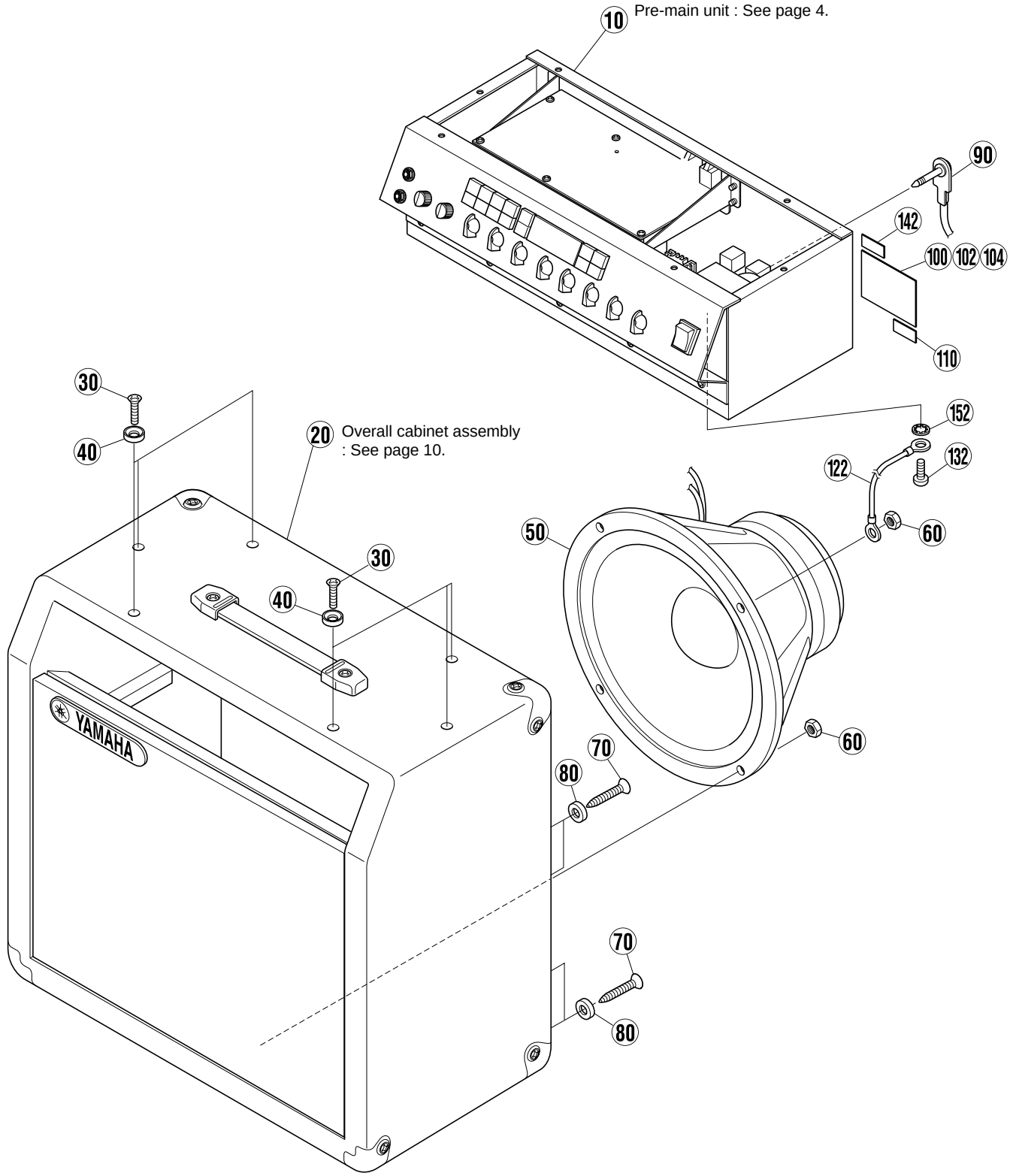

Downloaded from www.Manualslib.com manuals search engine

	REF NO.	PART NO.	DESCRIPTION			REMARKS		QTY	RANK
		- -	OVERALL ASSEMBLY			DG80-112 J	(V304070)		
		- -	OVERALL ASSEMBLY			DG80-112 U	(V304080)		
		- -	OVERALL ASSEMBLY			DG80-112 E	(V304090)		
		- -	OVERALL ASSEMBLY			DG80-112 B	(V304120)		
	10	- -	Pre-main Unit			J	(V304030)		
	10	- -	Pre-main Unit			U	(V304040)		
	10	- -	Pre-main Unit			E	(V304050)		
	10	- -	Pre-main Unit			B	(V304060)		
	20	V3063000	Overall Cabinet Assembly						
	30	VP104600	Oval Head Screw	5.0X35 MFC2BL				6	01
	40	EW300020	Washer	5S MFC2BL				6	01
*	50	XV536A00	Speaker	G12H-100					
*	60	20040400	Hexagonal Nut	5.0 MFZN2BL				4	
	70	EN240090	Oval Head Tapping Screw-1	4.0X30 MFC2BL				8	01
	80	VB890200	Washer	4S MFC2BL				8	01
	90	VR144600	Connector Assembly	L=500mm					06
	100	- -	Name Plate			J	(V305380)		
	102	- -	Name Plate			U	(V305440)		
	104	- -	Name Plate			E,B	(V305510)		
	110	- -	Label, Serial Number				(CB06869)	2	01
	122	- -	Connector Assembly	SP frame		U	(V298620)		
	132	VP156800	Bind Head Screw	A4.0X8 MFZN2BL		U			01
	142	VA039300	Label			U			03
	152	ET800070	Toothed Lock Washer-A	4.0 MFZN2BL		U			01

*:New Parts

RANK:Japan only

Downloaded from www.Manualslib.com manuals search engine

PRE-MAIN UNIT

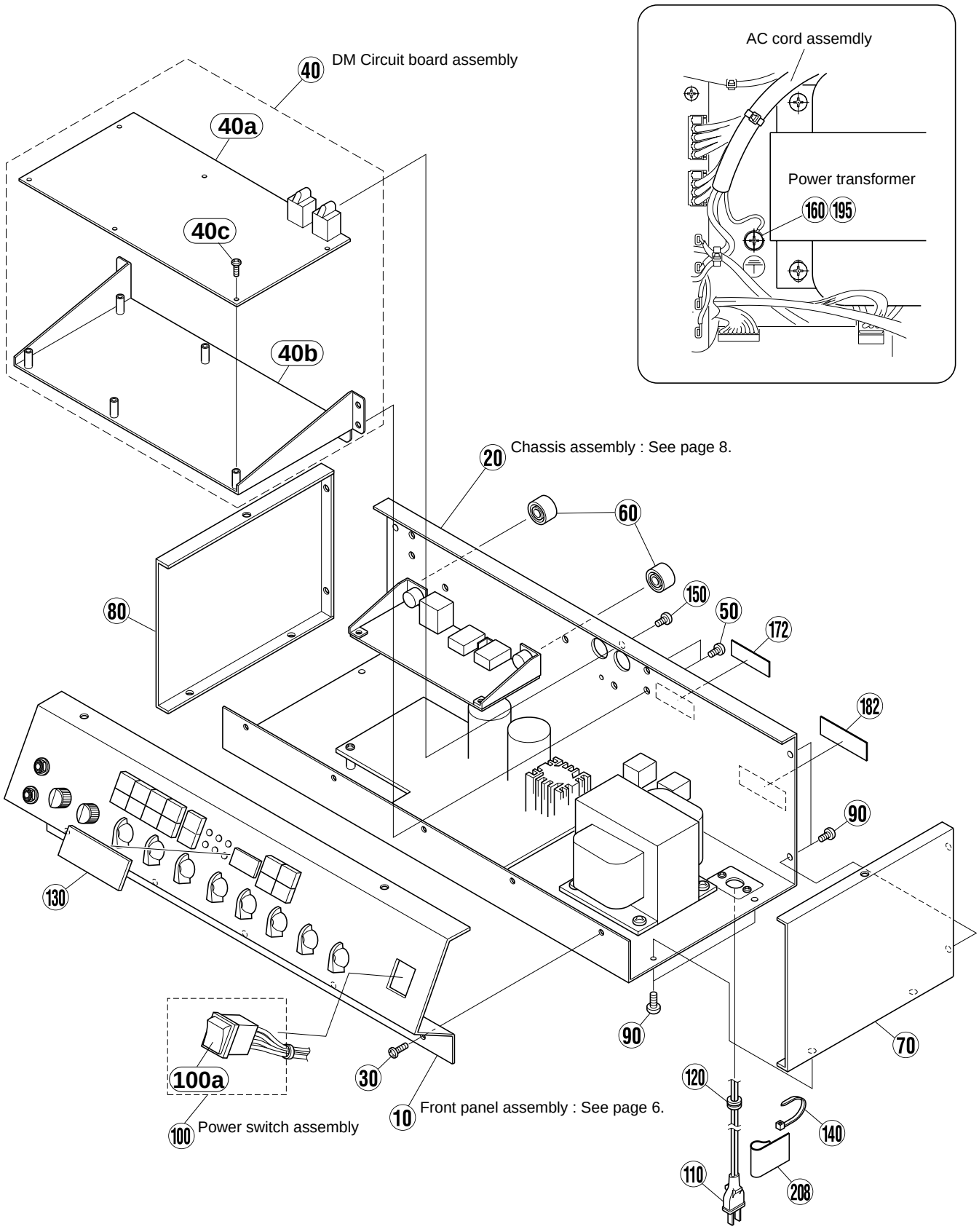

Downloaded from www.Manualslib.com manuals search engine

	REF NO.	PART NO.	DESCRIPTION			REMARKS		QTY	RANK
		- -	PRE-MAIN UNIT			DG80-112 J	(V304030)		
		- -	PRE-MAIN UNIT			DG80-112 U	(V304040)		
		- -	PRE-MAIN UNIT			DG80-112 E	(V304050)		
		- -	PRE-MAIN UNIT			DG80-112 B	(V304060)		
	10	- -	Front Panel Assembly			J	(V303830)		
	10	- -	Front Panel Assembly			U	(V303840)		
	10	- -	Front Panel Assembly			E	(V303850)		
	10	- -	Front Panel Assembly			B	(V303860)		
	20	- -	Chassis Assembly			J	(V303990)		
	20	- -	Chassis Assembly			U	(V304000)		
	20	- -	Chassis Assembly			E	(V304100)		
	20	- -	Chassis Assembly			B	(V304200)		
	30	VP156800	Bind Head Screw	A4.0X8 MFZN2BL				5	01
	40	- -	DM Circuit Board Assembly				(V303800)		
	40a	VZ771800	Circuit Board	DM					52
*	40b	V3034500	Angle Bracket, DM						
	40c	EP600230	Bind Head Tapping Screw-B	3.0X6 MFZN2BL				6	01
	50	VP156800	Bind Head Screw	A4.0X8 MFZN2BL				7	01
	60	VU578300	Volume knob	S DSTA-1		BLEND, LINE OUT LEVEL		2	04
*	70	V3034600	Side Angle	Left					
*	80	V3034700	Side Angle	Right					
	90	VP156700	Bind Head Screw	A3.0X8 MFZN2BL				8	01
	100	- -	Power Switch Assembly				(V225770)		
⚠	100a	V2217000	Switch	JW		POWER switch			07
⚠	110	MG000610	AC Cord	2P 15A 2.1m		J			06
⚠	110	VZ176600	AC Cord Assembly	3P SJT VAR		U			07
⚠	110	VZ971600	AC Cord Assembly	3P 6A VAR		E			08
⚠	110	V2017600	AC Cord Assembly	3P 10A 2.5m		B			09
	120	CB806850	Cord Strain Relief	SR-6N3-4		J,U			02
	120	CB032840	Cord Strain Relief	SR-5N-4		E,B			03
	130	VZ735700	Meter Cover						09
	140	CB069250	Cord Holder	BK-1				8	01
	150	EP600190	Bind Head Tapping Screw-B	3.0X8 MFZN2BL				2	01
	160	VP156800	Bind Head Screw	A4.0X8 MFZN2BL		U,E,B			01
	172	- -	Label	C.UL		U	(V306440)		
	182	- -	FCC Label			U	(V222070)		
	195	ET800070	Toothed Lock Washer-A	4.0 MFZN2BL		U,E,B			01
	208	VH096700	Caution Label, Cord			B			01

*:New Parts

RANK:Japan only

Downloaded from www.Manualslib.com manuals search engine

FRONT PANEL ASSEMBLY

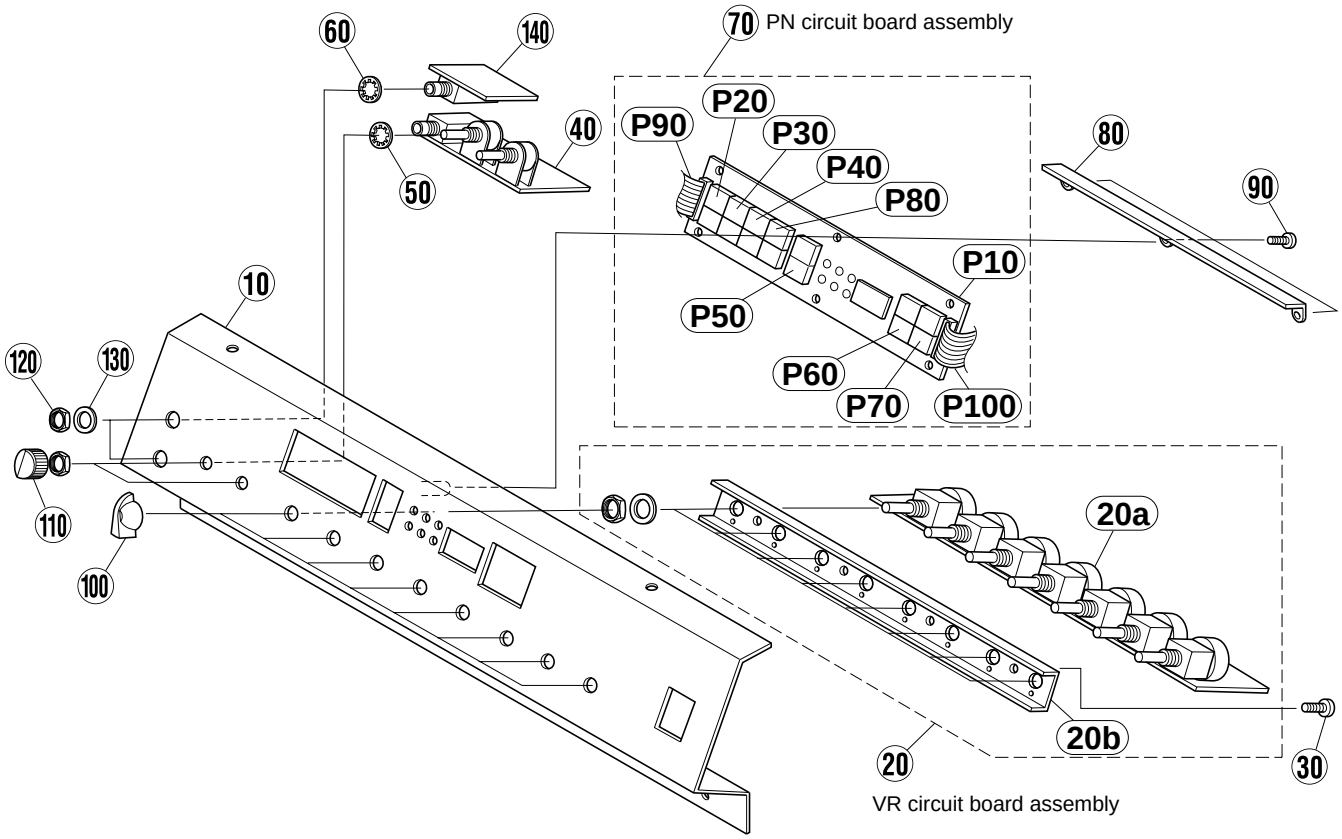

Downloaded from www.Manualslib.com manuals search engine

	REF NO.	PART NO.	DESCRIPTION			REMARKS		QTY	RANK
		- -	FRONT PANEL ASSEMBLY			DG80-112 J	(V303830)		
		- -	FRONT PANEL ASSEMBLY			DG80-112 U	(V303840)		
		- -	FRONT PANEL ASSEMBLY			DG80-112 E	(V303850)		
		- -	FRONT PANEL ASSEMBLY			DG80-112 B	(V303860)		
*	10	V3034300	Front Panel						
	20	- -	VR Circuit Board Assembly			J	(V305940)		
	20	- -	VR Circuit Board Assembly			U	(V305950)		
	20	- -	VR Circuit Board Assembly			E	(V305960)		
	20	- -	VR Circuit Board Assembly			B	(V305970)		
*	20a	V2979400	Circuit Board	VR		J			
*	20a	V2979500	Circuit Board	VR		U			
*	20a	V2979600	Circuit Board	VR		E			
*	20a	V2979700	Circuit Board	VR		B			
	20b	VZ736100	Angle, Motor Volime						05
	30	EP600230	Bind Head Tapping Screw-B	3.0X6 MFZN2BL				4	01
*	40	V2978000	Circuit Board	ANF		J			
*	40	V2978100	Circuit Board	ANF		U			
*	40	V2978200	Circuit Board	ANF		E			
*	40	V2978300	Circuit Board	ANF		B			
	50	ET800080	Toothed Lock Washer-A	7.0 MFZN2Y				2	01
	60	ET800150	Toothed Lock Washer-A	9.0 MFZN2Y				2	01
	70	- -	PN Circuit Board Assembly				(V305930)		
*	80	V3034800	Stay					2	
	90	EP600230	Bind Head Tapping Screw-B	3.0X6 MFZN2BL				6	01
	100	VV945400	Knob, VOLUME(CH)			GAIN,....,REVERB		8	05
	110	VU578300	Knob, VOLUME(S)	DSTA-1		TRIM, OUTPUT		2	04
	120	LX200060	Hexagonal Nut	9.0 12X2 MFNI33				2	01
	130	VL802300	Flat Washer	9X14 0.5 FNM3				2	01
*	140	V2978400	Circuit Board	ANF2		J			
*	140	V2978700	Circuit Board	ANF2		U			
*	140	V2978800	Circuit Board	ANF2		E			
*	140	V2978900	Circuit Board	ANF2		B			
		- -	PN Circuit Board Assembly				(V305930)		
*	P10	V2970700	Circuit Board	PN					
	P20	VV374000	Top Cap Assembly			LEAD1/CRUNCH1			06
	P30	VV374100	Top Cap Assembly			LEAD2/CRUNCH2			06
	P40	VZ739800	Top Cap Assembly			DRIVE1/CLEAN1			06
	P50	VZ739900	Top Cap Assembly			REVERB/MODE			06
	P60	VV374500	Top Cap Assembly			cursor(up/down)			06
	P70	VV374600	Top Cap Assembly			STORE/RECALL			06
	P80	V2134000	Top Cap Assembly			DRIVE2/CLEAN2			06
	P90	- -	PH Connector Assembly	11P L=300 C&C			(VZ97520)		
	P100	- -	PH Connector Assembly	12P L=300 C&C			(VZ97530)		

*:New Parts

RANK:Japan only

Downloaded from www.Manualslib.com manuals search engine

CHASSIS ASSEMBLY

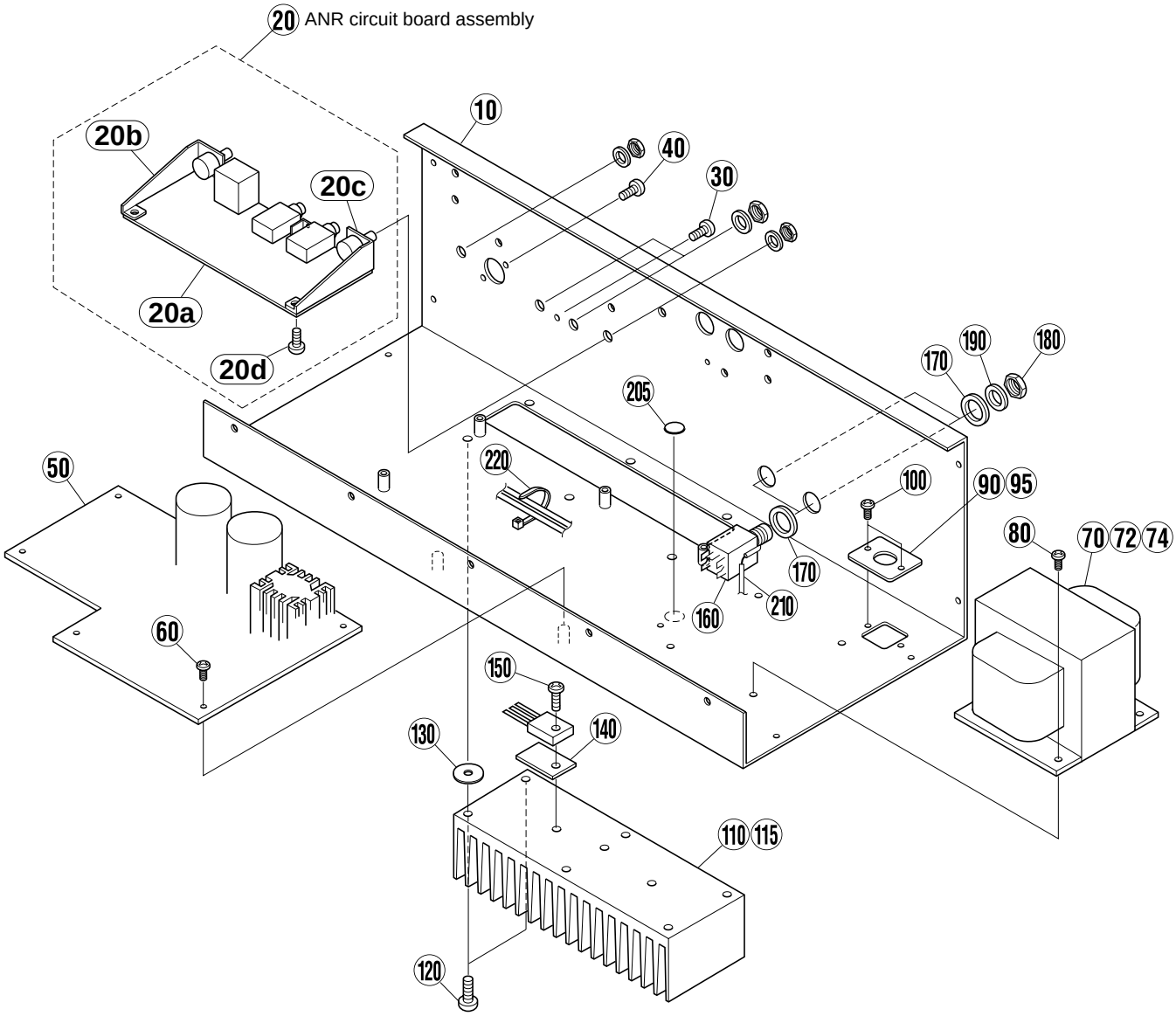

Downloaded from www.Manualslib.com manuals search engine

	REF NO.	PART NO.	DESCRIPTION			REMARKS		QTY	RANK
		- -	CHASSIS ASSEMBLY			DG80-112 J	(V303990)		
		- -	CHASSIS ASSEMBLY			DG80-112 U	(V304000)		
		- -	CHASSIS ASSEMBLY			DG80-112 E	(V304100)		
		- -	CHASSIS ASSEMBLY			DG80-112 B	(V304200)		
*	10	**V3034400**	Chassis						
	20	- -	ANR Circuit Board Assembly			J	(V303760)		
	20	- -	ANR Circuit Board Assembly			U	(V306410)		
	20	- -	ANR Circuit Board Assembly			E	(V306420)		
	20	- -	ANR Circuit Board Assembly			B	(V306430)		
*	20a	**V2977400**	Circuit Board	ANR		J			
*	20a	**V2977500**	Circuit Board	ANR		U			
*	20a	**V2977700**	Circuit Board	ANR		E			
*	20a	**V2977900**	Circuit Board	ANR		B			
	20b	**VZ746600**	Sub Angle	Left					04
	20c	**VZ746500**	Sub Angle	Right					04
	20d	**EK400500**	Pan Head Screw	SP 3.0X8 MFZN2Y				2	01
	30	**VP156700**	Bind Head Screw	A3.0X8 MFZN2BL					01
	40	**EP600190**	Bind Head Tapping Screw-B	3.0X8 MFZN2BL				2	01
*	50	**V2979000**	Circuit Board	MAIN		J			
*	50	**V2979100**	Circuit Board	MAIN		U			
*	50	**V2979200**	Circuit Board	MAIN		E			
*	50	**V2979300**	Circuit Board	MAIN		B			
	60	**EP600230**	Bind Head Tapping Screw-B	3.0X6 MFZN2BL				6	01
⚠	70	**XU118A00**	Power Transformer			J			16
⚠	72	**XU295A00**	Power Transformer			U			16
⚠	74	**XU296A00**	Power Transformer			E,B			16
	80	**VP156800**	Bind Head Screw	A4.0X8 MFZN2BL				4	01
	90	**VZ735900**	Bush Plate			J,U			04
	95	**VZ736000**	Bush Plate			E,B			04
	100	**VP156600**	Bind Head Screw	A3.0X6 MFZN2BL				2	01
	110	**VZ739200**	Heat Sink			J,U			15
	115	**V0029700**	Heat Sink			E,B			17
	120	**VP156900**	Bind Head Screw	A4.0X12 MFZN2BL				6	01
	130	**VZ736400**	Spacer, Heat Sink					6	03
	140	**VK196000**	Sheet	BFG-20ADH-6 22X29				2	01
	150	**EL200070**	Pan Head Screw	SP 3.0X12 MFZN2Y				4	01
	160	**LB201120**	Phone Jack	JL2B X-G7639		SPEAKER1, 2(EXT)		2	03
	170	**VL786300**	Spacer, Speaker Out	SR400B300G				4	04
	180	**LX200060**	Hexagonal Nut	9.0 12X2 MFNI33				2	01
	190	**VL802300**	Flat Washer	9X14 0.5 FNM33G				2	01
	205	**CA060690**	Earth Mark			U,E,B			01
	210	- -	Connector Assembly	UL1672 RE WH			(V306910)		
	220	**CB069250**	Cord Holder	BK-1				2	01

*:New Parts

RANK:Japan only

Downloaded from www.Manualslib.com manuals search engine

OVERALL CABINET ASSEMBLY

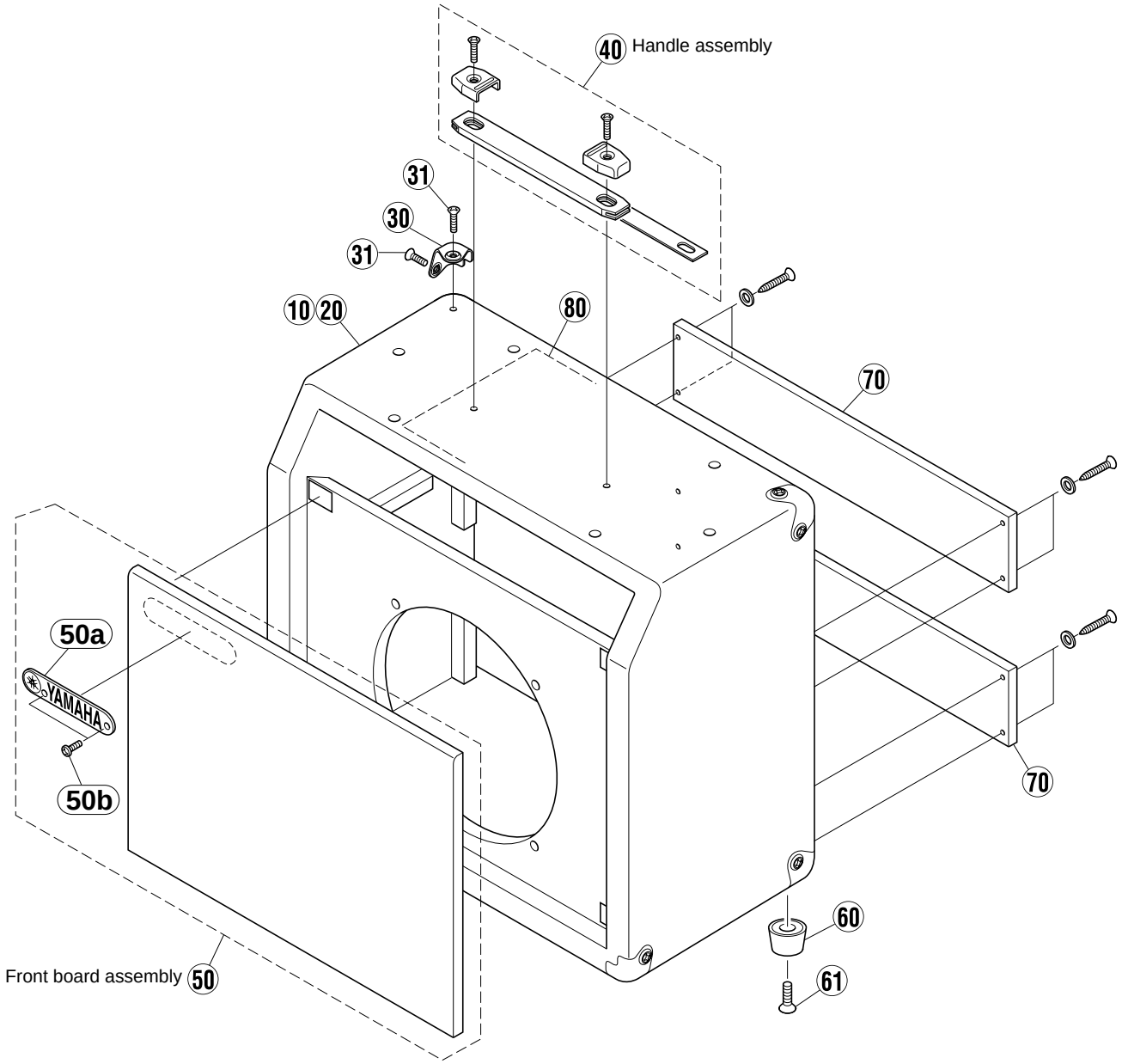

	REF NO.	PART NO.	DESCRIPTION			REMARKS	QTY	RANK
*		V3063000	OVERALL CABINET ASSEMBLY			DG80-112		
	10	- -	Cabinet Assembly			(V306280)		
	20	- -	Vinyl	BL		(V306320)		
	30	AA809050	Corner				6	05
	31	EX808230	Round Head Wood Screw	3.5X16 FNM33G			12	
	40	NB812640	Handle Assembly					07
*	50	V3062900	Front Board Assembly					
	50a	V2237300	Name Plate					09
	50b	V3623800	Trus Head Tapping Screw-1	3.0X10 MFZN2BL			2	
	60	CB023200	Foot	BL			4	01
	61	03702420	Flat Head Wood Screw	3.5X25 MFZN2BL			4	
*	70	V3063300	Back Board				2	
*	80	V3053400	Shield Sheet					

*:New Parts

RANK:Japan only

Downloaded from www.Manualslib.com manuals search engine

ELECTRICAL PARTS

	REF NO.	PART NO.	DESCRIPTION			REMARKS	QTY	RANK
			ELECTRICAL PARTS			DG80-112		
		VZ771800	Circuit Board	DM		(XU331B0)		52
*		V2979400	Circuit Board	VR		J (XU365C0)		
*		V2979500	Circuit Board	VR		U (XU365C0)		
*		V2979600	Circuit Board	VR		E (XU365C0)		
*		V2979700	Circuit Board	VR		B (XU365C0)		
*		V2978000	Circuit Board	ANF		J (XU365C0)		
*		V2978100	Circuit Board	ANF		U (XU365C0)		
*		V2978200	Circuit Board	ANF		E (XU365C0)		
*		V2978300	Circuit Board	ANF		B (XU365C0)		
*		V2978400	Circuit Board	ANF2		J (XU365C0)		
*		V2978700	Circuit Board	ANF2		U (XU365C0)		
*		V2978800	Circuit Board	ANF2		E (XU365C0)		
*		V2978900	Circuit Board	ANF2		B (XU365C0)		
*		V2977400	Circuit Board	ANR		J (XU365C0)		
*		V2977500	Circuit Board	ANR		U (XU365C0)		
*		V2977700	Circuit Board	ANR		E (XU365C0)		
*		V2977900	Circuit Board	ANR		B (XU365C0)		
*		V2979000	Circuit Board	MAIN		J (XU365C0)		
*		V2979100	Circuit Board	MAIN		U (XU365C0)		
*		V2979200	Circuit Board	MAIN		E (XU365C0)		
*		V2979300	Circuit Board	MAIN		B (XU365C0)		
*		V2970700	Circuit Board	PN		(XV485A0)		
		VZ771800	Circuit Board	DM		(XU331B0)		52
	BT1	VS246300	Battery Holder	CR2450BH				03
	BT1	VS246400	Lithium Battery	CR2450				03
	C1	UB245100	Monolithic Ceramic Cap.	F 0.100 25V Z				01
	C3-6	UB245100	Monolithic Ceramic Cap.	F 0.100 25V Z				01
	C13	UB245100	Monolithic Ceramic Cap.	F 0.100 25V Z				01
	C24	UB245100	Monolithic Ceramic Cap.	F 0.100 25V Z				01
	C25	UB245100	Monolithic Ceramic Cap.	F 0.100 25V Z				01
	C27	UB245100	Monolithic Ceramic Cap.	F 0.100 25V Z				01
	C30	UB245100	Monolithic Ceramic Cap.	F 0.100 25V Z				01
	C34	UB245100	Monolithic Ceramic Cap.	F 0.100 25V Z				01
	C37	UB245100	Monolithic Ceramic Cap.	F 0.100 25V Z				01
	C40	UB245100	Monolithic Ceramic Cap.	F 0.100 25V Z				01
	C42	UB245100	Monolithic Ceramic Cap.	F 0.100 25V Z				01
	C44	UB245100	Monolithic Ceramic Cap.	F 0.100 25V Z				01
	C50	UB245100	Monolithic Ceramic Cap.	F 0.100 25V Z				01
	C53	UB245100	Monolithic Ceramic Cap.	F 0.100 25V Z				01
	-55	UB245100	Monolithic Ceramic Cap.	F 0.100 25V Z				01
	C58	UB051120	Monolithic Ceramic Cap.	SL 12P 50V J				01
	C59	UB051120	Monolithic Ceramic Cap.	SL 12P 50V J				01
	C60	UB245100	Monolithic Ceramic Cap.	F 0.100 25V Z				01
	C61	UB245100	Monolithic Ceramic Cap.	F 0.100 25V Z				01
	C63	UB245100	Monolithic Ceramic Cap.	F 0.100 25V Z				01
	C64	UB245100	Monolithic Ceramic Cap.	F 0.100 25V Z				01
	C66	UB245100	Monolithic Ceramic Cap.	F 0.100 25V Z				01
	C67	UB245100	Monolithic Ceramic Cap.	F 0.100 25V Z				01
	C68	UB044100	Monolithic Ceramic Cap.	F 0.010 50V Z				01
	C69	UB044100	Monolithic Ceramic Cap.	F 0.010 50V Z				01
	C71	UB245100	Monolithic Ceramic Cap.	F 0.100 25V Z				01
	C74	UB245100	Monolithic Ceramic Cap.	F 0.100 25V Z				01
	C77	UB245100	Monolithic Ceramic Cap.	F 0.100 25V Z				01
	C78	UR828100	Electrolytic Cap.	100.00 10.0V				01
	-81	UR828100	Electrolytic Cap.	100.00 10.0V				01
	C82	UR848220	Electrolytic Cap.	220.00 25.0V				01
	C83	UR847100	Electrolytic Cap.	10.00 25.0V				01
	C84	UR847100	Electrolytic Cap.	10.00 25.0V				01
	C85	UB245100	Monolithic Ceramic Cap.	F 0.100 25V Z				01
	C91	UB245100	Monolithic Ceramic Cap.	F 0.100 25V Z				01
	-96	UB245100	Monolithic Ceramic Cap.	F 0.100 25V Z				01
	C97	VD930900	Semiconductive Cera. Cap.	0.1000 25V M				01
	C98	VD930900	Semiconductive Cera. Cap.	0.1000 25V M				01
	C101	VJ899000	Monolithic Ceramic Cap.	CH 5P 50V C				01
	C102	VJ899000	Monolithic Ceramic Cap.	CH 5P 50V C				01
	C103	UB245100	Monolithic Ceramic Cap.	F 0.100 25V Z				01
	C104	UR847100	Electrolytic Cap.	10.00 25.0V				01
	C105	UR847100	Electrolytic Cap.	10.00 25.0V				01

*:New Parts

RANK:Japan only

Downloaded from www.Manualslib.com manuals search engine

REF NO.	PART NO.	DESCRIPTION			REMARKS	QTY	RANK
C106	**UB245100**	Monolithic Ceramic Cap.	F 0.100 25V Z				01
C107	**UR847100**	Electrolytic Cap.	10.00 25.0V				01
C108	**UR847100**	Electrolytic Cap.	10.00 25.0V				01
C109	**UN847100**	Electrolytic Cap.-BP	10.00 25.0V				01
C110	**UN847100**	Electrolytic Cap.-BP	10.00 25.0V				01
C111	**UB245100**	Monolithic Ceramic Cap.	F 0.100 25V Z				01
C112	**FG651680**	Ceramic Capacitor-SL	68P 50V J				01
C113	**FG651680**	Ceramic Capacitor-SL	68P 50V J				01
C114	**FG651220**	Ceramic Capacitor-SL	22P 50V J				01
C115	**FG651220**	Ceramic Capacitor-SL	22P 50V J				01
C116	**UB245100**	Monolithic Ceramic Cap.	F 0.100 25V Z				01
C117	**UA353680**	Mylar Capacitor	6800P 50V J				01
C118	**UA353680**	Mylar Capacitor	6800P 50V J				01
C119	**VD930900**	Semiconductive Cera. Cap.	0.1000 25V M				01
C120	**UB245100**	Monolithic Ceramic Cap.	F 0.100 25V Z				01
C121	**VD534400**	Monolithic Ceramic Cap.	1.500 25V Z				01
C122	**VD930900**	Semiconductive Cera. Cap.	0.1000 25V M				01
C123	**VD534400**	Monolithic Ceramic Cap.	1.500 25V Z				01
C124	**UR847100**	Electrolytic Cap.	10.00 25.0V				01
C125	**UR847100**	Electrolytic Cap.	10.00 25.0V				01
C126	**VD930900**	Semiconductive Cera. Cap.	0.1000 25V M				01
-129	**VD930900**	Semiconductive Cera. Cap.	0.1000 25V M				01
C130	**VD534400**	Monolithic Ceramic Cap.	1.500 25V Z				01
C131	**UR847220**	Electrolytic Cap.	22.00 25.0V				01
C132	**UR847220**	Electrolytic Cap.	22.00 25.0V				01
C133	**UR847100**	Electrolytic Cap.	10.00 25.0V				01
-136	**UR847100**	Electrolytic Cap.	10.00 25.0V				01
C137	**VD930900**	Semiconductive Cera. Cap.	0.1000 25V M				01
-140	**VD930900**	Semiconductive Cera. Cap.	0.1000 25V M				01
C141	**UR847220**	Electrolytic Cap.	22.00 25.0V				01
-143	**UR847220**	Electrolytic Cap.	22.00 25.0V				01
C144	**UR847470**	Electrolytic Cap.	47.00 25.0V				01
C145	**UR847220**	Electrolytic Cap.	22.00 25.0V				01
C146	**UR847470**	Electrolytic Cap.	47.00 25.0V				01
C147	**UR848100**	Electrolytic Cap.	100.00 25.0V				01
C148	**UR848100**	Electrolytic Cap.	100.00 25.0V				01
C151	**UR847220**	Electrolytic Cap.	22.00 25.0V				01
C152	**UR847220**	Electrolytic Cap.	22.00 25.0V				01
C155	**VD930900**	Semiconductive Cera. Cap.	0.1000 25V M				01
C156	**VD930900**	Semiconductive Cera. Cap.	0.1000 25V M				01
C157	**FG651680**	Ceramic Capacitor-SL	68P 50V J				01
C158	**FG651680**	Ceramic Capacitor-SL	68P 50V J				01
C159	**UA353330**	Mylar Capacitor	3300P 50V J				01
C160	**UA353330**	Mylar Capacitor	3300P 50V J				01
C163	**UR847220**	Electrolytic Cap.	22.00 25.0V				01
C164	**UR847220**	Electrolytic Cap.	22.00 25.0V				01
C165	**UA352470**	Mylar Capacitor	470P 50V J				01
C166	**UA352470**	Mylar Capacitor	470P 50V J				01
C167	**UA353820**	Mylar Capacitor	8200P 50V J				
C168	**UA353820**	Mylar Capacitor	8200P 50V J				
C169	**UR847220**	Electrolytic Cap.	22.00 25.0V				01
C170	**UR847220**	Electrolytic Cap.	22.00 25.0V				01
C171	**UR847100**	Electrolytic Cap.	10.00 25.0V				01
-174	**UR847100**	Electrolytic Cap.	10.00 25.0V				01
C175	**UN847100**	Electrolytic Cap.-BP	10.00 25.0V				01
C176	**UN847100**	Electrolytic Cap.-BP	10.00 25.0V				01
C177	**UR847100**	Electrolytic Cap.	10.00 25.0V				01
-180	**UR847100**	Electrolytic Cap.	10.00 25.0V				01
C181	**VD930900**	Semiconductive Cera. Cap.	0.1000 25V M				01
-190	**VD930900**	Semiconductive Cera. Cap.	0.1000 25V M				01
C191	**UB245100**	Monolithic Ceramic Cap.	F 0.100 25V Z				01
-195	**UB245100**	Monolithic Ceramic Cap.	F 0.100 25V Z				01
C196	**UB052100**	Monolithic Ceramic Cap.	SL 100P 50V J				01
CN4	**VB390400**	Connector Base Post	PH- 8P TE				01
CN5	**VB390500**	Connector Base Post	PH- 9P TE				03
CN6	**VB390700**	Connector Base Post	PH-11P TE				01
CN7	**VB390800**	Connector Base Post	PH-12P TE				01
CN8	**LB932040**	Base Post Connector	VH- 4P TE				01
CN9	**VB390600**	Connector Base Post	PH-10P TE				01
CN101	**VB389800**	Connector Base Post	PH- 2P TE				01

*:New Parts

RANK:Japan only

Downloaded from www.Manualslib.com manuals search engine

REF NO.	PART NO.	DESCRIPTION			REMARKS	QTY	RANK
CN102	**LB918080**	Base Post Connector	XH 8P TE				01
D1	**VT332900**	Diode (chip)	1SS355 TE-17				01
EM1	**FZ006970**	LC Filter	LS MT Y223NB				02
-11	**FZ006970**	LC Filter	LS MT Y223NB				02
EM101	**FZ006970**	LC Filter	LS MT Y223NB				02
-103	**FZ006970**	LC Filter	LS MT Y223NB				02
EM104	**FZ006920**	LC Filter	LS MT B271KB				01
-106	**FZ006920**	LC Filter	LS MT B271KB				01
IC2	**XQ962D00**	IC	YSS228E-F		DSP3		20
IC3	**XQ962D00**	IC	YSS228E-F		DSP3		20
IC8	**XT776A00**	IC	UPD424260G5-70-7JF		DRAM 4M		16
IC8	**XU462A00**	IC	MSM514260C-60TS-K				16
IC11	**XT776A00**	IC	UPD424260G5-70-7JF		DRAM 4M		16
IC11	**XU462A00**	IC	MSM514260C-60TS-K				16
IC12	**XT090A00**	IC	SRM2B256SLMX70		SRAM 256K		07
IC12	**XV411A00**	IC	W24258S-70LE-EL10				07
IC13	**XQ375A00**	IC	HD6413002FP16		CPU H8-3002		09
IC14	**XT090A00**	IC	SRM2B256SLMX70		SRAM 256K		07
IC14	**XV411A00**	IC	W24258S-70LE-EL10				07
IC18	**XH603A00**	IC	TC74HC157AF-TP1		DATA SELECTOR		03
IC19	**XR967A00**	IC	MB3790PF		ASSP		05
IC21	**XQ042A00**	IC	SN74HC374ANSR		D-FF		03
IC25	**VR903700**	Photo Coupler	HCPL-M600				04
IC27	**XQ042A00**	IC	SN74HC374ANSR		D-FF		03
IC28	**XN963A00**	IC	TC74VHC32F		OR		01
IC29	**XN963A00**	IC	TC74VHC32F		OR		01
IC33	**XD831A00**	IC	SN74HC08NSR		AND		01
* IC34	**XU707C00**	IC			ROM 4M		
IC35	**XD233A00**	IC	SN74HC244NSR		BUFFER		03
IC36	**XD233A00**	IC	SN74HC244NSR		BUFFER		03
IC101	**XD660A00**	IC	TC74HCU04AF-TP1		INVERTER		01
IC102	**XR684A00**	IC	TC74HC4040F		COUNTER		03
IC104	**IG102500**	IC	NE5532P		OP AMP		06
IC105	**IG102500**	IC	NE5532P		OP AMP		06
IC110	**XQ967A00**	IC	TC74HC164AF		SHIFT REGISTER		03
IC117	**XD658A00**	IC	TC74HC175AF-TP1		D-FF		02
IC118	**XQ199A00**	IC	AK5390-VP		A/D CONVERTER		14
IC119	**XK280A00**	IC	YSF210		DIGITAL FILTER		10
IC120	**XA507A00**	IC	AN78N05		REGULATOR +5V		02
IC121	**XG780A00**	IC	AN79N05		REGULATOR -5V		02
IC122	**XN136A00**	IC	PCM1702P		D/A CONVERTER		08
IC123	**XN136A00**	IC	PCM1702P		D/A CONVERTER		08
IC124	**IG102500**	IC	NE5532P		OP AMP		06
IC125	**IG102500**	IC	NE5532P		OP AMP		06
IC128	**XA507A00**	IC	AN78N05		REGULATOR +5V		02
IC129	**XG780A00**	IC	AN79N05		REGULATOR -5V		02
IC130	**XT384A00**	IC	PST600C-MMP3P		SYSTEM RESET		03
JK1	**VK519000**	DIN Connector	5P3 YKF51-5058		MIDI IN/OUT		04
L1-4	**VS740100**	Chip Inductance	BLM21B751S				03
R2	**RD255270**	Carbon Resistor (chip)	270.0 0.1 J				01
R5	**RD257100**	Carbon Resistor (chip)	10.0K 0.1 J				01
R6	**RD257100**	Carbon Resistor (chip)	10.0K 0.1 J				01
R8	**RD255100**	Carbon Resistor (chip)	100.0 0.1 J				01
R14	**RD255100**	Carbon Resistor (chip)	100.0 0.1 J				01
R15	**RD255100**	Carbon Resistor (chip)	100.0 0.1 J				01
R18	**RD255100**	Carbon Resistor (chip)	100.0 0.1 J				01
R25	**RD257100**	Carbon Resistor (chip)	10.0K 0.1 J				01
R28	**RD257100**	Carbon Resistor (chip)	10.0K 0.1 J				01
R31	**RD257100**	Carbon Resistor (chip)	10.0K 0.1 J				01
R32	**RD257100**	Carbon Resistor (chip)	10.0K 0.1 J				01
R35	**RD256100**	Carbon Resistor (chip)	1.0K 0.1 J				01
R36	**RD257100**	Carbon Resistor (chip)	10.0K 0.1 J				01
R38	**RD257100**	Carbon Resistor (chip)	10.0K 0.1 J				01
R40	**RD256220**	Carbon Resistor (chip)	2.2K 0.1 J				01
R43	**RD255220**	Carbon Resistor (chip)	220.0 0.1 J				01
R44	**RD255220**	Carbon Resistor (chip)	220.0 0.1 J				01
R46	**RD255220**	Carbon Resistor (chip)	220.0 0.1 J				01
R49	**RD257100**	Carbon Resistor (chip)	10.0K 0.1 J				01
R101	**RD259100**	Carbon Resistor (chip)	1.0M 0.1 J				01
R102	**RD255680**	Carbon Resistor (chip)	680.0 0.1 J				01

*:New Parts

RANK:Japan only

Downloaded from www.Manualslib.com manuals search engine

	REF NO.	PART NO.	DESCRIPTION		REMARKS		QTY	RANK
	R105	**HF757100**	Carbon Resistor	10.0K 1/4 J				01
	R106	**HF757100**	Carbon Resistor	10.0K 1/4 J				01
	R107	**RD255220**	Carbon Resistor (chip)	220.0 0.1 J				01
	R108	**HF756330**	Carbon Resistor	3.3K 1/4 J				01
	-111	**HF756330**	Carbon Resistor	3.3K 1/4 J				01
	R112	**HF756560**	Carbon Resistor	5.6K 1/4 J				01
	-117	**HF756560**	Carbon Resistor	5.6K 1/4 J				01
	R118	**HF754470**	Carbon Resistor	47.0 1/4 J				01
	-121	**HF754470**	Carbon Resistor	47.0 1/4 J				01
	R122	**HF756100**	Carbon Resistor	1.0K 1/4 J				01
	R123	**HF754100**	Carbon Resistor	10.0 1/4 J				01
	R125	**RD254100**	Carbon Resistor (chip)	10.0 0.1 J				01
	-128	**RD254100**	Carbon Resistor (chip)	10.0 0.1 J				01
	R129	**HF755820**	Carbon Resistor	820.0 1/4 J				01
	R130	**HF755820**	Carbon Resistor	820.0 1/4 J				01
	R131	**HF756470**	Carbon Resistor	4.7K 1/4 J				01
	R132	**HF756470**	Carbon Resistor	4.7K 1/4 J				01
	R133	**HF756220**	Carbon Resistor	2.2K 1/4 J				01
	-138	**HF756220**	Carbon Resistor	2.2K 1/4 J				01
	R139	**HF756100**	Carbon Resistor	1.0K 1/4 J				01
	R140	**HF756100**	Carbon Resistor	1.0K 1/4 J				01
	R141	**HF758100**	Carbon Resistor	100.0K 1/4 J				01
	R142	**HF758100**	Carbon Resistor	100.0K 1/4 J				01
	R143	**RD256470**	Carbon Resistor (chip)	4.7K 0.1 J				01
	RA1	**RE047100**	Resistor Array	10KX4				01
	-16	**RE047100**	Resistor Array	10KX4				01
	TR1,2	**VV556400**	Transistor	2SC2412K Q,R,S				01
	X1	**VU682100**	Quartz Crystal Unit	30.00MHz DOC-49S2				06
	X3	**VE463500**	Quartz Crystal Unit	AT-49/12.0000MHz				03
	X101	**VN277000**	Quartz Crystal Unit	24.576MH AF3817CQA				03
*		**V2979400**	Circuit Board	VR	J	(XU365C0)		
*		**V2979500**	Circuit Board	VR	U	(XU365C0)		
*		**V2979600**	Circuit Board	VR	E	(XU365C0)		
*		**V2979700**	Circuit Board	VR	B	(XU365C0)		
	C601	**UR848220**	Electrolytic Cap.	220.00 25.0V				01
	C602	**FG644100**	Ceramic Capacitor-F	0.0100 50V Z				01
	C603	**UR847100**	Electrolytic Cap.	10.00 25.0V				01
	C604	**VD930900**	Semiconductive Cera. Cap.	0.1000 25V M				01
	C605	**VD930900**	Semiconductive Cera. Cap.	0.1000 25V M				01
	C606	**FG644100**	Ceramic Capacitor-F	0.0100 50V Z				01
	C607	**VD930900**	Semiconductive Cera. Cap.	0.1000 25V M				01
	C608	**FG644100**	Ceramic Capacitor-F	0.0100 50V Z				01
	C609	**VD930900**	Semiconductive Cera. Cap.	0.1000 25V M				01
	C610	**FG644100**	Ceramic Capacitor-F	0.0100 50V Z				01
	C611	**VD930900**	Semiconductive Cera. Cap.	0.1000 25V M				01
	C612	**VD930900**	Semiconductive Cera. Cap.	0.1000 25V M				01
	C613	**FG644100**	Ceramic Capacitor-F	0.0100 50V Z				01
	C614	**VD930900**	Semiconductive Cera. Cap.	0.1000 25V M				01
	C615	**FG644100**	Ceramic Capacitor-F	0.0100 50V Z				01
	C616	**VD930900**	Semiconductive Cera. Cap.	0.1000 25V M				01
	C617	**FG644100**	Ceramic Capacitor-F	0.0100 50V Z				01
	C618	**VD930900**	Semiconductive Cera. Cap.	0.1000 25V M				01
	C619	**FG644100**	Ceramic Capacitor-F	0.0100 50V Z				01
	CN601	**LB918030**	Base Post Connector	XH 3P TE				01
	CN602	**- -**	PH Connector assembly	8P L=150 B&C		(V298670)		
	CN603	**- -**	PH Connector Assembly	10P L=120 B&C		(V298690)		
	CN604	**- -**	PH Connector Assembly	9P L=150 B&C		(V298980)		
	EM601	**FZ006970**	LC Filter	LS MT Y223NB				02
	IC601	**XF494A00**	IC	LB1641	MOTOR DRIVER			03
	-608	**XF494A00**	IC	LB1641	MOTOR DRIVER			03
	J	**VA078900**	Jumper Wire	0.55				
	R601	**HF756470**	Carbon Resistor	4.7K 1/4 J				01
	R602	**HF754100**	Carbon Resistor	10.0 1/4 J				01
	R603	**HF756470**	Carbon Resistor	4.7K 1/4 J				01
	R604	**HF754100**	Carbon Resistor	10.0 1/4 J				01
	R605	**HF756470**	Carbon Resistor	4.7K 1/4 J				01
	R606	**HF754100**	Carbon Resistor	10.0 1/4 J				01
	R607	**HF756470**	Carbon Resistor	4.7K 1/4 J				01
	R608	**HF754100**	Carbon Resistor	10.0 1/4 J				01

*:New Parts

RANK:Japan only

Downloaded from www.Manualslib.com manuals search engine

	REF NO.	PART NO.	DESCRIPTION			REMARKS	QTY	RANK
	R609	**HF756470**	Carbon Resistor	4.7K 1/4 J				01
	R610	**HF754100**	Carbon Resistor	10.0 1/4 J				01
	R611	**HF756470**	Carbon Resistor	4.7K 1/4 J				01
	R612	**HF754100**	Carbon Resistor	10.0 1/4 J				01
	R613	**HF756470**	Carbon Resistor	4.7K 1/4 J				01
	R614	**HF754100**	Carbon Resistor	10.0 1/4 J				01
	R615	**HF756470**	Carbon Resistor	4.7K 1/4 J				01
	R616	**HF754100**	Carbon Resistor	10.0 1/4 J				01
	VR601	**VU647600**	Motor Drive Volume	RK16812MG 10KB		GAIN		07
	VR602	**VU647600**	Motor Drive Volume	RK16812MG 10KB		MASTER		07
	VR603	**VA788500**	Trimmer Potentiometer	B 220.0K 3P RHE				01
	VR604	**VU647600**	Motor Drive Volume	RK16812MG 10KB		TREBLE		07
	VR605	**VA788500**	Trimmer Potentiometer	B 220.0K 3P RHE				01
	VR606	**VU647600**	Motor Drive Volume	RK16812MG 10KB		HIGH MID		07
	VR607	**VA788500**	Trimmer Potentiometer	B 220.0K 3P RHE				01
	VR608	**VU647600**	Motor Drive Volume	RK16812MG 10KB		LOW MID		07
	VR609	**VA788500**	Trimmer Potentiometer	B 220.0K 3P RHE				01
	VR610	**VU647600**	Motor Drive Volume	RK16812MG 10KB		BASS/TIME		07
	VR611	**VA788500**	Trimmer Potentiometer	B 220.0K 3P RHE				01
	VR612	**VU647600**	Motor Drive Volume	RK16812MG 10KB		PRESENCE/FEED BACK		07
	VR613	**VU647600**	Motor Drive Volume	RK16812MG 10KB		REBERB/LEVEL		07
	ZD601	**VQ451000**	Zener Diode	MTZJ5.1B 5.1V				01
	-608	**VQ451000**	Zener Diode	MTZJ5.1B 5.1V				01
*		**V2978000**	Circuit Board	ANF		J (XU365C0)		
*		**V2978100**	Circuit Board	ANF		U (XU365C0)		
*		**V2978200**	Circuit Board	ANF		E (XU365C0)		
*		**V2978300**	Circuit Board	ANF		B (XU365C0)		
	C501	**UR866100**	Electrolytic Cap.	1.00 50.0V				01
	C502	**FG652100**	Ceramic Capacitor-SL	100P 50V J				01
	C503	**UR847100**	Electrolytic Cap.	10.00 25.0V				01
	-506	**UR847100**	Electrolytic Cap.	10.00 25.0V				01
	C507	**UA354100**	Mylar Capacitor	0.0100 50V J				01
	C508	**UA355100**	Mylar Capacitor	0.1000 50V J				01
	CN501	**- -**	PH Shield Wire	3P L=200 B&C		(V298760)		
	CN502	**- -**	PH Shield Wire	2P L=150 B&C		(V298720)		
	CN503	**LB918050**	Base Post Connector	XH 5P TE				01
	CN504	**VB390200**	Connector Base Post	PH- 6P TE				01
	D501	**VB941200**	Diode	1SS133,1SS176				01
	-505	**VB941200**	Diode	1SS133,1SS176				01
	IC501	**IG107000**	IC	NJM072D		OP AMP		04
	J	**VA078900**	Jumper Wire	0.55				
	JK501	**LB301800**	Phone Jack	HLJ0544 MONO		INPUT LOW		03
	LD501	**VR080200**	LED	SLR-342VR3F RE		OUTPUT		01
	LD501	**VH870600**	LED Socket	PM2800M				01
	LD502	**VR080300**	LED	SLR-342MG3F GR		TRIM		01
	LD502	**VH870600**	LED Socket	PM2800M				01
	R501	**HF756100**	Carbon Resistor	1.0K 1/4 J				01
	R502	**HF758100**	Carbon Resistor	100.0K 1/4 J				01
	R503	**HF756470**	Carbon Resistor	4.7K 1/4 J				01
	R504	**HF757390**	Carbon Resistor	39.0K 1/4 J				01
	R505	**HF756680**	Carbon Resistor	6.8K 1/4 J				01
	R506	**HF756100**	Carbon Resistor	1.0K 1/4 J				01
	R507	**HF757100**	Carbon Resistor	10.0K 1/4 J				01
	R508	**HF757150**	Carbon Resistor	15.0K 1/4 J				01
	R509	**HF758100**	Carbon Resistor	100.0K 1/4 J				01
	R510	**HF757330**	Carbon Resistor	33.0K 1/4 J				01
	R511	**HF758100**	Carbon Resistor	100.0K 1/4 J				01
	R512	**HF758100**	Carbon Resistor	100.0K 1/4 J				01
	R513	**HF756330**	Carbon Resistor	3.3K 1/4 J				01
	R514	**HF757330**	Carbon Resistor	33.0K 1/4 J				01
	R515	**HF756150**	Carbon Resistor	1.5K 1/4 J				01
	R516	**HF757330**	Carbon Resistor	33.0K 1/4 J				01
	TR501	**IC174070**	Transistor	2SC1740S R,S				01
	TR502	**VV912400**	Transistor	2SA933ASTP R.S				01
	TR503	**IC174070**	Transistor	2SC1740S R,S				01
	VR501	**V2212700**	Rotary Variable Resistor	RK1631210 50KB		OUTPUT		04
	VR502	**VU647700**	Rotary Variable Resistor	RK1631210 50KC		TRIM		04
	ZD501	**VP764200**	Zener Diode	MTZJ12A 12.0V				01

*:New Parts

RANK:Japan only

Downloaded from www.Manualslib.com manuals search engine

	REF NO.	PART NO.	DESCRIPTION		REMARKS	QTY	RANK
*		**V2978400**	Circuit Board	ANF2	J (XU365C0)		
*		**V2978700**	Circuit Board	ANF2	U (XU365C0)		
*		**V2978800**	Circuit Board	ANF2	E (XU365C0)		
*		**V2978900**	Circuit Board	ANF2	B (XU365C0)		
	C701	**VR168700**	Monolithic Mylar Capacitor	ECQ-V1H224JL3 50V			01
	C702	**FG652100**	Ceramic Capacitor-SL	100P 50V J			01
	C703	**UR847100**	Electrolytic Cap.	10.00 25.0V			01
	C704	**VR168700**	Monolithic Mylar Capacitor	ECQ-V1H224JL3 50V			01
	C705	**FG652100**	Ceramic Capacitor-SL	100P 50V J			01
	C706	**UR847100**	Electrolytic Cap.	10.00 25.0V			01
	-708	**UR847100**	Electrolytic Cap.	10.00 25.0V			01
	CN701	**- -**	PH Connector Assembly	6P L=70 B&C	(V207050)		
	D701	**VB941200**	Diode	1SS133,1SS176			01
	-704	**VB941200**	Diode	1SS133,1SS176			01
	IC701	**IG107000**	IC	NJM072D	OP AMP		04
	JK701	**LB301800**	Phone Jack	HLJ0544 MONO	INPUT HIGH		03
	R701	**HF757100**	Carbon Resistor	10.0K 1/4 J			01
	R702	**HF759100**	Carbon Resistor	1.0M 1/4 J			01
	R703	**HF757270**	Carbon Resistor	27.0K 1/4 J			01
	R704	**HF756470**	Carbon Resistor	4.7K 1/4 J			01
	R705	**HF757100**	Carbon Resistor	10.0K 1/4 J			01
	R706	**HF757100**	Carbon Resistor	10.0K 1/4 J			01
	R707	**HF759100**	Carbon Resistor	1.0M 1/4 J			01
	R708	**HF756470**	Carbon Resistor	4.7K 1/4 J			01
	R709	**HF756470**	Carbon Resistor	4.7K 1/4 J			01
	R710	**HF759100**	Carbon Resistor	1.0M 1/4 J			01
*		**V2977400**	Circuit Board	ANR	J (XU365C0)		
*		**V2977500**	Circuit Board	ANR	U (XU365C0)		
*		**V2977700**	Circuit Board	ANR	E (XU365C0)		
*		**V2977900**	Circuit Board	ANR	B (XU365C0)		
	C401	**UR866100**	Electrolytic Cap.	1.00 50.0V			01
	C402	**UR847100**	Electrolytic Cap.	10.00 25.0V			01
	-405	**UR847100**	Electrolytic Cap.	10.00 25.0V			01
	C406	**UR866100**	Electrolytic Cap.	1.00 50.0V			01
	C407	**UA355100**	Mylar Capacitor	0.1000 50V J			01
	C408	**UA355100**	Mylar Capacitor	0.1000 50V J			01
	C409	**UR847100**	Electrolytic Cap.	10.00 25.0V			01
	C410	**FG652100**	Ceramic Capacitor-SL	100P 50V J			01
	C411	**UR847330**	Electrolytic Cap.	33.00 25.0V			01
	C412	**UR847100**	Electrolytic Cap.	10.00 25.0V			01
	C413	**FG613100**	Ceramic Capacitor-B	1000P 50V K			01
	C414	**UR866100**	Electrolytic Cap.	1.00 50.0V			01
	C415	**FG652100**	Ceramic Capacitor-SL	100P 50V J			01
	C416	**UR847100**	Electrolytic Cap.	10.00 25.0V			01
	-418	**UR847100**	Electrolytic Cap.	10.00 25.0V			01
	C419	**UR847220**	Electrolytic Cap.	22.00 25.0V			01
	C420	**UR847220**	Electrolytic Cap.	22.00 25.0V			01
	C421	**UR847100**	Electrolytic Cap.	10.00 25.0V			01
	C422	**FG652100**	Ceramic Capacitor-SL	100P 50V J			01
	C423	**UR847100**	Electrolytic Cap.	10.00 25.0V			01
	C424	**UR847100**	Electrolytic Cap.	10.00 25.0V			01
	C425	**FG652100**	Ceramic Capacitor-SL	100P 50V J			01
	C426	**VD930900**	Semiconductive Cera. Cap.	0.1000 25V M			01
	-428	**VD930900**	Semiconductive Cera. Cap.	0.1000 25V M			01
	CN401	**- -**	Shield Wire	8P L=100 B&C	(VZ97580)		
	CN402	**LB918020**	Base Post Connector	XH 2P TE			01
	CN403	**VB389900**	Connector Base Post	PH- 3P TE			01
	CN404	**LB918040**	Base Post Connector	XH 4P TE			01
	D401	**VB941200**	Diode	1SS133,1SS176			01
	D402	**VB941200**	Diode	1SS133,1SS176			01
	J	**VA078900**	Jumper Wire	0.55			
	JK401	**VS133700**	XLM Connector	NC3MAH	LINE OUT		04
	JK402	**VL790300**	Jack	HLJ3305-01-3000	EFFECT SEND		03
	JK403	**VL830500**	Jack	HLJ3305-01-3030	EFFECT RETURN		03
	IC401	**IG107000**	IC	NJM072D	OP AMP		04
	-403	**IG107000**	IC	NJM072D	OP AMP		04
	K401	**VC719300**	Terminal Plate	P-424			01
	L401	**VB971100**	Coil	FL5R200QN 20uH			01
	L402	**VB971100**	Coil	FL5R200QN 20uH			01

*:New Parts

RANK:Japan only

Downloaded from www.Manualslib.com manuals search engine

	REF NO.	PART NO.	DESCRIPTION		REMARKS	QTY	RANK
	R401	**HF756220**	Carbon Resistor	2.2K 1/4 J			01
	R402	**HF756220**	Carbon Resistor	2.2K 1/4 J			01
	R403	**HF757120**	Carbon Resistor	12.0K 1/4 J			01
	R404	**HF757100**	Carbon Resistor	10.0K 1/4 J			01
	R405	**HF757100**	Carbon Resistor	10.0K 1/4 J			01
	R406	**HF757470**	Carbon Resistor	47.0K 1/4 J			01
	R407	**HF757470**	Carbon Resistor	47.0K 1/4 J			01
	R408	**HF758470**	Carbon Resistor	470.0K 1/4 J			01
	R409	**HF757470**	Carbon Resistor	47.0K 1/4 J			01
	R410	**HF757100**	Carbon Resistor	10.0K 1/4 J			01
	R411	**HF757100**	Carbon Resistor	10.0K 1/4 J			01
	R412	**HF756100**	Carbon Resistor	1.0K 1/4 J			01
	R413	**HF756100**	Carbon Resistor	1.0K 1/4 J			01
	R414	**HF757560**	Carbon Resistor	56.0K 1/4 J			01
	R415	**HF757470**	Carbon Resistor	47.0K 1/4 J			01
	R416	**HF757470**	Carbon Resistor	47.0K 1/4 J			01
	R417	**HF757100**	Carbon Resistor	10.0K 1/4 J			01
	R418	**HF757470**	Carbon Resistor	47.0K 1/4 J			01
	R419	**HF758470**	Carbon Resistor	470.0K 1/4 J			01
	R420	**HF757100**	Carbon Resistor	10.0K 1/4 J			01
	-423	**HF757100**	Carbon Resistor	10.0K 1/4 J			01
	R424	**HF756220**	Carbon Resistor	2.2K 1/4 J			01
	R425	**HF758100**	Carbon Resistor	100.0K 1/4 J			01
	-427	**HF758100**	Carbon Resistor	100.0K 1/4 J			01
	R428	**HF755330**	Carbon Resistor	330.0 1/4 J			01
	R429	**HF755330**	Carbon Resistor	330.0 1/4 J			01
	R430	**HF758220**	Carbon Resistor	220.0K 1/4 J			01
	R431	**HF755270**	Carbon Resistor	270.0 1/4 J			01
	R432	**HF755270**	Carbon Resistor	270.0 1/4 J			01
	R433	**HF757220**	Carbon Resistor	22.0K 1/4 J			01
	R434	**HF758220**	Carbon Resistor	220.0K 1/4 J			01
	R435	**HF757100**	Carbon Resistor	10.0K 1/4 J			01
	VR401	**VZ658600**	Rotary Variable Resistor	16MM 50K A	LINE OUT LEVEL		03
	VR402	**VZ658700**	Rotary Variable Resistor	16MM 20K B	EFFECT BLEND		03
	ZD401	**VQ313000**	Zener Diode	MTZJ5.6B 5.6V			01
	ZD402	**VQ313000**	Zener Diode	MTZJ5.6B 5.6V			01
*		**V2979000**	Circuit Board	MAIN	J (XU365C0)		
*		**V2979100**	Circuit Board	MAIN	U (XU365C0)		
*		**V2979200**	Circuit Board	MAIN	E (XU365C0)		
*		**V2979300**	Circuit Board	MAIN	B (XU365C0)		
		EP630230	Bind Head Tapping Screw-C	3.0X8 MFZN2BL			01
		VE646600	Heat Sink	OSH-4725C-SP			03
⚠	C301	**FI383470**	Capacitor	4700P 400V U.C.S.V			01
	C302	**VL802400**	Polypropylene Capacitor	0.022U/630V			01
	C303	**VS819200**	Monolithic Ceramic Cap.	0.100 50V Z			01
	C304	**VS819200**	Monolithic Ceramic Cap.	0.100 50V Z			01
	C305	**VZ878800**	Electrolytic Cap.	2200U 160V			07
	C306	**UR759100**	Electrolytic Cap.	1000 35.0V			01
	C307	**UR759100**	Electrolytic Cap.	1000 35.0V			01
	C308	**UR739330**	Electrolytic Cap.	3300 16.0V			01
	C309	**FG644100**	Ceramic Capacitor-F	0.0100 50V Z			01
	C310	**FG644100**	Ceramic Capacitor-F	0.0100 50V Z			01
	C311	**UR739330**	Electrolytic Cap.	3300 16.0V			01
	C312	**FG644100**	Ceramic Capacitor-F	0.0100 50V Z			01
	C313	**UR866100**	Electrolytic Cap.	1.00 50.0V			01
	C314	**UR847100**	Electrolytic Cap.	10.00 25.0V			01
	C315	**UR847100**	Electrolytic Cap.	10.00 25.0V			01
	C316	**FG644100**	Ceramic Capacitor-F	0.0100 50V Z			01
	C317	**FG644100**	Ceramic Capacitor-F	0.0100 50V Z			01
	C318	**UN847100**	Electrolytic Cap.-BP	10.00 25.0V			01
	C319	**UR867220**	Electrolytic Cap.	22.00 50.0V			01
	C320	**UR896100**	Electrolytic Cap.	1.0 100.0V			01
	C321	**UR866100**	Electrolytic Cap.	1.00 50.0V			01
	C322	**UR847100**	Electrolytic Cap.	10.00 25.0V			01
	C323	**UR896100**	Electrolytic Cap.	1.0 100.0V			01
	C324	**FH211470**	Ceramic Capacitor-SL	47P 500V K			01
	C325	**UR897470**	Electrolytic Cap.	47.0 100.0V			01
	C326	**UR897100**	Electrolytic Cap.	10.0 100.0V			01
	C327	**FH211470**	Ceramic Capacitor-SL	47P 500V K			01

*:New Parts

RANK:Japan only

Downloaded from www.Manualslib.com manuals search engine

	REF NO.	PART NO.	DESCRIPTION			REMARKS	QTY	RANK
	C329	**FG644100**	Ceramic Capacitor-F	0.0100 50V Z				01
	C330	**UR847100**	Electrolytic Cap.	10.00 25.0V				01
	C331	**UR847100**	Electrolytic Cap.	10.00 25.0V				01
	C332	**FG644100**	Ceramic Capacitor-F	0.0100 50V Z				01
	C333	**UA355100**	Mylar Capacitor	0.1000 50V J				01
	C334	**UA355100**	Mylar Capacitor	0.1000 50V J				01
	C335	**VZ878800**	Electrolytic Cap.	2200U 160V				07
	C336	**VD930900**	Semiconductive Cera. Cap.	0.1000 25V M				01
	-338	**VD930900**	Semiconductive Cera. Cap.	0.1000 25V M				01
	CN301	**LB918030**	Base Post Connector	XH 3P TE				01
	CN302	**LB932050**	Base Post Connector	VH- 5P TE				01
	CN303	**LB932040**	Base Post Connector	VH- 4P TE				01
	CN304	**- -**	XH Shield Wire	2P L=100 B&C		(V298740)		
	CN305	**- -**	XH Connector Assembly	4P L=200 B&C		(V298650)		
	CN306	**- -**	XH Connector Assembly	5P L=250 B&C		(V298660)		
	CN307	**- -**	XH Connector Assembly	3P L=270 B&C		(V298640)		
	CN308	**- -**	VH Connector Assembly	4P L=250 B&C 105flC		(VZ97390)		
	CN309	**- -**	Connector Assembly	3P L=200mm		(VR14290)		
	CN310	**- -**	Connector Assembly	3P L=200mm		(VR14290)		
	CN312	**- -**	Connector Assembly	3P L=200mm		(VR14290)		
	CN313	**- -**	Connector Assembly	3P 120mm B&B 2mm		(VQ60190)		
	CN314	**- -**	Connector Assembly	3P L=200mm		(VR14290)		
	CN315	**- -**	Connector Assembly	3P L=200mm		(VR14290)		
	CN316	**- -**	Connector Assembly	3P 120mm B&B 2mm		(VQ60190)		
	CN317	**- -**	Connector Assembly	3P L=200mm		(VR14290)		
	CN318	**VG879900**	Base Post Connector	VA- 2P TE		U,E,B		01
	D301	**VB941200**	Diode	1SS133,1SS176				01
	-309	**VB941200**	Diode	1SS133,1SS176				01
⚠	DB301	**IH001370**	Diode Stack	D5FB20 5.0A 200V				05
⚠	DB302	**IH001090**	Diode Stack	S4VB20 2.6A 200V				05
⚠	DB303	**VS197600**	Diode Stack	S1VB20 1.0A 200V				02
	FT301	**IE000010**	FET	2SK30ATM Y				03
	FT302	**IE000010**	FET	2SK30ATM Y				03
⚠	FZ301	**V0014600**	Fuse	3.00A 125V		J,U		01
⚠	FZ301	**KB001660**	Fuse	T 1.60AL/250V S		E,B		01
⚠	FZ302	**VZ093400**	Fuse	0.5A 250V		J,U		01
⚠	FZ302	**KB000710**	Fuse	T 500AL/250V S		E,B		02
⚠	FZ303	**VZ093400**	Fuse	0.5A 250V		J,U		01
⚠	FZ303	**KB000710**	Fuse	T 500AL/250V S		E,B		02
⚠	FZ304	**V0014600**	Fuse	3.00A 125V		J,U		01
⚠	FZ304	**KB000760**	Fuse	T 3.15AL/250V S		E,B		01
⚠	FZ305	**VS822500**	Fuse	2.00A 125V		J,U		02
⚠	FZ305	**KB000750**	Fuse	T 2.00AL/250V		E,B		01
	FZ301	**LB201530**	Fuse Holder	PC-PH1				01
	-305	**LB201530**	Fuse Holder	PC-PH1				01
⚠	IC301	**XD853A00**	IC	NJM7815FA		REGULATOR +15V		03
⚠	IC302	**XD854A00**	IC	NJM7915FA		REGULATOR -15V		03
	IC303	**XJ607A00**	IC	NJM7805FA		REGULATOR +5V		02
	J	**VA078900**	Jumper Wire	0.55				
	K301	**VA855400**	Terminal					01
	K302	**VA855400**	Terminal					01
	K303	**VA855400**	Terminal			J		01
	K304	**VA855400**	Terminal			J		01
	R301	**HF756220**	Carbon Resistor	2.2K 1/4 J				01
	R302	**HF757100**	Carbon Resistor	10.0K 1/4 J				01
	R303	**HF758100**	Carbon Resistor	100.0K 1/4 J				01
	R304	**HF755220**	Carbon Resistor	220.0 1/4 J				01
	R305	**HF758100**	Carbon Resistor	100.0K 1/4 J				01
	R306	**HF758120**	Carbon Resistor	120.0K 1/4 J				01
	R307	**HF756220**	Carbon Resistor	2.2K 1/4 J				01
	R308	**HF758100**	Carbon Resistor	100.0K 1/4 J				01
	R309	**HF755220**	Carbon Resistor	220.0 1/4 J				01
	R310	**HF758100**	Carbon Resistor	100.0K 1/4 J				01
	R311	**HF756390**	Carbon Resistor	3.9K 1/4 J				01
	R312	**HF758100**	Carbon Resistor	100.0K 1/4 J				01
	-315	**HF758100**	Carbon Resistor	100.0K 1/4 J				01
	R316	**HF757220**	Carbon Resistor	22.0K 1/4 J				01
	R317	**HF757330**	Carbon Resistor	33.0K 1/4 J				01
	R318	**HF758150**	Carbon Resistor	150.0K 1/4 J				01
	R319	**HF756100**	Carbon Resistor	1.0K 1/4 J				01

∗:New Parts

RANK:Japan only

Downloaded from www.Manualslib.com manuals search engine

	REF NO.	PART NO.	DESCRIPTION		REMARKS	QTY	RANK
	R320	**HF758100**	Carbon Resistor	100.0K 1/4 J			01
	R321	**HF755100**	Carbon Resistor	100.0 1/4 J			01
	R322	**HF757680**	Carbon Resistor	68.0K 1/4 J			01
	R323	**HF756470**	Carbon Resistor	4.7K 1/4 J			01
	R324	**HF759220**	Carbon Resistor	2.2M 1/4 J			01
	R325	**HF756270**	Carbon Resistor	2.7K 1/4 J			01
	R326	**HF758680**	Carbon Resistor	680.0K 1/4 J			01
	R327	**VC761800**	Metal Oxide Film Resistor	1.5K 2W J			01
	R328	**HF756680**	Carbon Resistor	6.8K 1/4 J			01
	R329	**VC750000**	Metal Oxide Film Resistor	10.0K 1W J			01
	R330	**VC749400**	Metal Oxide Film Resistor	5.6K 1W J			01
	R331	**HV755220**	Flame Proof C. Resistor	220.0 1/4 J			01
	R332	**VC753800**	Metal Oxide Film Resistor	1.0 2W J			01
	R333	**HF755470**	Carbon Resistor	470.0 1/4 J			01
	R334	**HF755470**	Carbon Resistor	470.0 1/4 J			01
	R335	**HF755680**	Carbon Resistor	680.0 1/4 J			01
	R336	**HF755680**	Carbon Resistor	680.0 1/4 J			01
	R337	**HV755150**	Flame Proof C. Resistor	150.0 1/4 J			01
	R338	**HV754100**	Flame Proof C. Resistor	10.0 1/4 J			01
	R339	**HV755150**	Flame Proof C. Resistor	150.0 1/4 J			01
	R340	**VC755500**	Metal Oxide Film Resistor	4.7 2W J			01
	R341	**VC761800**	Metal Oxide Film Resistor	1.5K 2W J			01
	RA301	**VJ787600**	Metal Plate Resistor	MPC725 0.22+0.22	5W		02
	-303	**VJ787600**	Metal Plate Resistor	MPC725 0.22+0.22	5W		02
	RY301	**VL369700**	Relay	DC RY5W-K	5V		07
	SPG,H	**- -**	Connector Assembly	#18 SP	1set (WH,RE) (VZ87890)		
	TR301	**IC174070**	Transistor	2SC1740S R,S			01
	-303	**IC174070**	Transistor	2SC1740S R,S			01
	TR304	**IA097030**	Transistor	2SA970 GR,BL			01
	-306	**IA097030**	Transistor	2SA970 GR,BL			01
	TR307	**VE198800**	Transistor	2SC2705 O,Y			01
	TR308	**VE198800**	Transistor	2SC2705 O,Y			01
	TR309	**VE198700**	Transistor	2SA1145 O,Y			01
	TR310	**VQ116600**	Pair Transistor	A1837/C4793			04
	TR311	**VQ116600**	Pair Transistor	A1837/C4793			04
	TR312	**VA107000**	Transistor	2SC3423 O,Y			02
	TR313	**VY705000**	Transistor	2SC5200 R,O			05
	TR314	**VY705000**	Transistor	2SC5200 R,O			05
	VR301	**VA787900**	Trimmer Potentiometer	B 4.7K 3P RHE			01
	VR302	**VB244500**	Trimmer Potentiometer	B 470.0K 3P KVS			01
	VR303	**VA787700**	Trimmer Potentiometer	B 2.2K Äæ 3P RH0			01
	ZD301	**VQ554700**	Zener Diode	MTZJ9.1B 9.1V			01
*		**V2970700**	Circuit Board	PN	(XV485A0)		
		V2176100	LED Spacer	BL	AMP SELECT		03
	C201	**UB245100**	Monolithic Ceramic Cap.	F 0.100 25V Z			01
	-203	**UB245100**	Monolithic Ceramic Cap.	F 0.100 25V Z			01
	C204	**UR847100**	Electrolytic Cap.	10.00 25.0V			01
	C205	**UB245100**	Monolithic Ceramic Cap.	F 0.100 25V Z			01
	C206	**UB245100**	Monolithic Ceramic Cap.	F 0.100 25V Z			01
	CN201	**VC166500**	Connector Base Post	PH-12P SE			01
	CN202	**VB389600**	Connector Base Post	PH-11P SE			01
	D201	**VT332900**	Diode (chip)	1SS355 TE-17			01
	-214	**VT332900**	Diode (chip)	1SS355 TE-17			01
	IC201	**VH630700**	LED Display	HDSP-5521 7seg.X2			04
	IC201	**VU647500**	IC Socket	100-024-000			04
	IC202	**XQ042A00**	IC	SN74HC374ANSR	D-FF		03
	-205	**XQ042A00**	IC	SN74HC374ANSR	D-FF		03
	LD201	**VG261500**	LED	GL3PR8 RE	SPRING,HALL,PLATE		01
	-206	**VG261500**	LED	GL3PR8 RE	AMP,TAPE ECHO,UTIL		01
	LD201	**VA277900**	LED Spacer				01
	-206	**VA277900**	LED Spacer				01
	LD207	**VN327300**	LED	SLP-155B-81 RE	AMP SELECT		01
	-214	**VN327300**	LED	SLP-155B-81 RE			01
	R201	**RD257100**	Carbon Resistor (chip)	10.0K 0.1 J			01
	R202	**RD255820**	Carbon Resistor (chip)	820.0 0.1 J			01
	-205	**RD255820**	Carbon Resistor (chip)	820.0 0.1 J			01
	R206	**RD257100**	Carbon Resistor (chip)	10.0K 0.1 J			01
	R207	**RD255820**	Carbon Resistor (chip)	820.0 0.1 J			01
	R208	**RD255820**	Carbon Resistor (chip)	820.0 0.1 J			01

*:New Parts

RANK:Japan only

Downloaded from www.Manualslib.com manuals search engine

	REF NO.	PART NO.	DESCRIPTION			REMARKS	QTY	RANK
	R209	**RD257100**	Carbon Resistor (chip)	10.0K 0.1 J				01
	R210	**RD255820**	Carbon Resistor (chip)	820.0 0.1 J				01
	-212	**RD255820**	Carbon Resistor (chip)	820.0 0.1 J				01
	R213	**RD257100**	Carbon Resistor (chip)	10.0K 0.1 J				01
	R214	**RD255820**	Carbon Resistor (chip)	820.0 0.1 J				01
	-220	**RD255820**	Carbon Resistor (chip)	820.0 0.1 J				01
	R221	**RD255560**	Carbon Resistor (chip)	560.0 0.1 J				01
	-234	**RD255560**	Carbon Resistor (chip)	560.0 0.1 J				01
	SW201	**KA907030**	Push Switch	SKHHAL		AMP SELECT,REVERB,up,		01
	-214	**KA907030**	Push Switch	SKHHAL		down,MODE,STORE,RECALL		01
*		**XV536A00**	Speaker	G12H-100				
		VR144600	Connector Assembly	L=500mm				06
		- -	Connector Assembly	SP frame		U (V298620)		
		- -	Power Switch Assembly			(V225770)		
⚠		**V2217000**	Switch	JW		POWER switch		07
⚠		**MG000610**	AC Cord	2P 15A 2.1m		J		06
⚠		**VZ176600**	AC Cord Assembly	3P SJT VAR		U		07
⚠		**VZ971600**	AC Cord Assembly	3P 6A VAR		E		08
⚠		**V2017600**	AC Cord Assembly	3P 10A 2.5m		B		09
		- -	PH Connector Assembly	11P L=300 C&C		(VZ97520)		
		- -	PH Connector Assembly	12P L=300 C&C		(VZ97530)		
⚠		**XU118A00**	Power Transformer			J		16
⚠		**XU295A00**	Power Transformer			U		16
⚠		**XU296A00**	Power Transformer			E,B		16
		LB201120	Phone Jack	JL2B X-G7639		SPEAKER1, 2(EXT)		03
		- -	Connector Assembly	UL1672 RE WH		(V306910)		

*:New Parts

RANK:Japan only

Downloaded from www.Manualslib.com manuals search engine

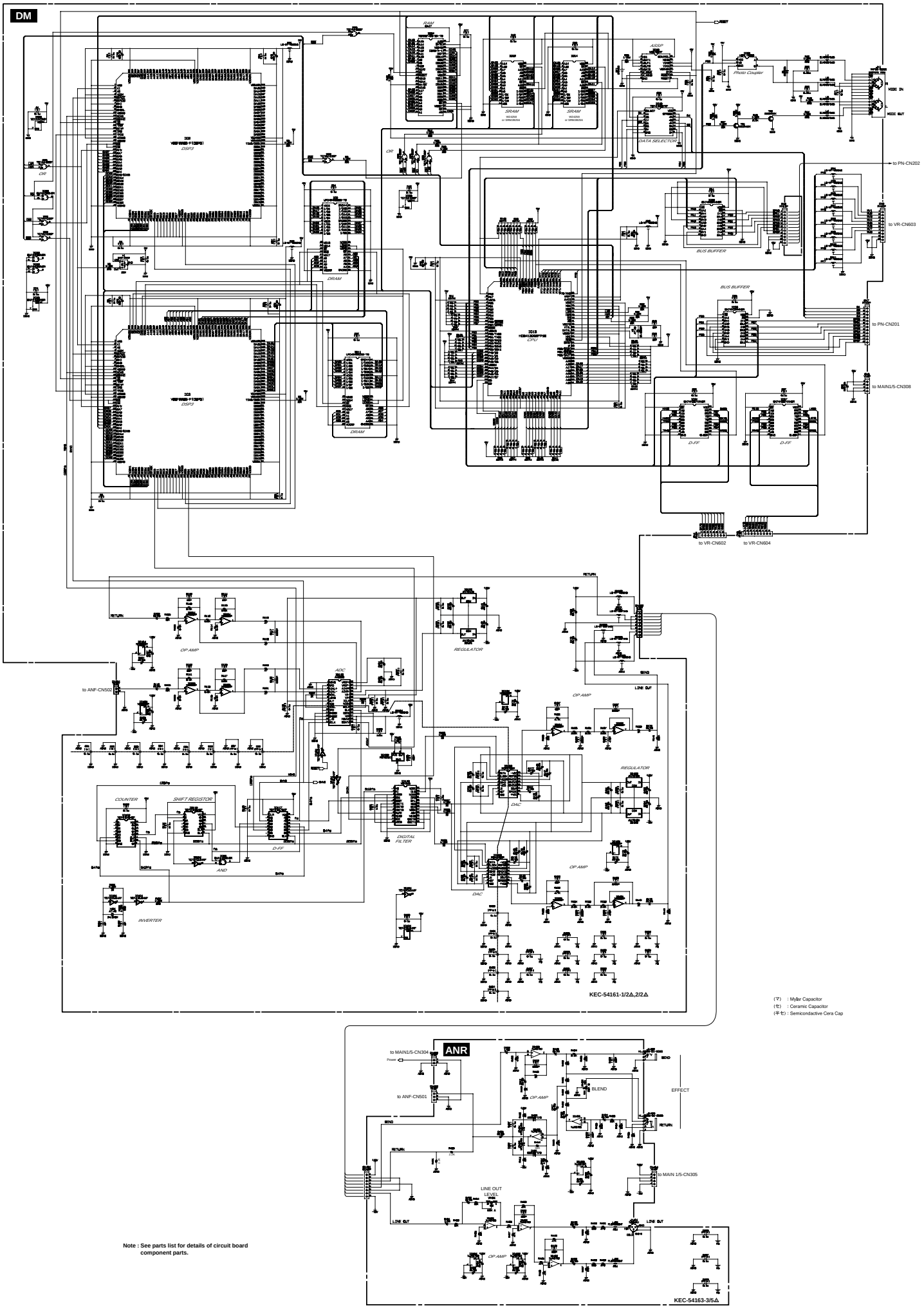

Note : See parts list for details of circuit board component parts.

Downloaded from www.Manualslib.com manuals search engine

■DG80-112 OVERALL CIRCUIT DIAGRAM 2/2 (MAIN1/5～5/5,PN,VR,ANF,ANF2)

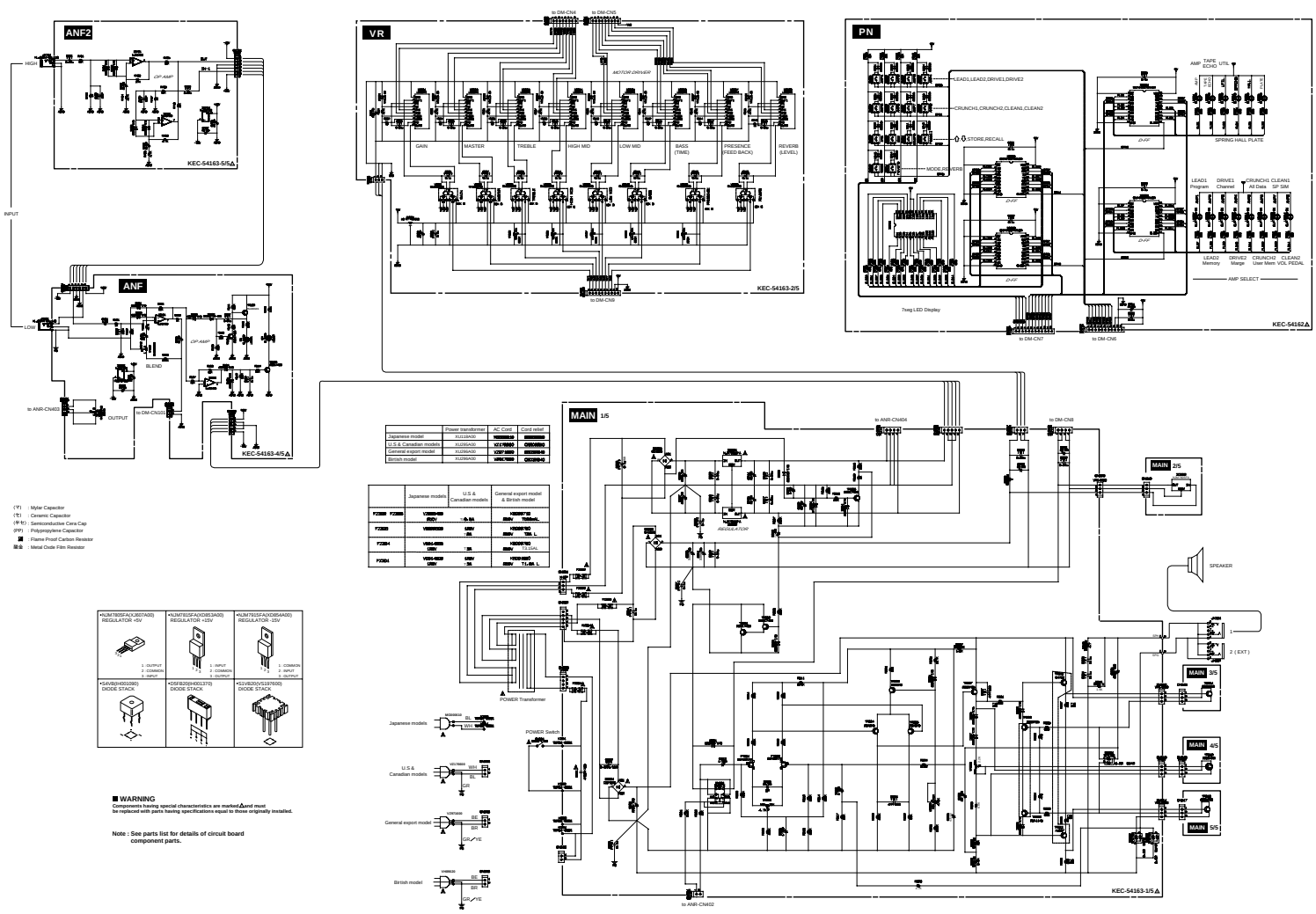

	Power transformer	AC Cord	Cord relief
Japanese model	XU118A00	[illegible]	[illegible]
U.S & Canadian models	XU206A00	[illegible]	[illegible]
General export model	XU206A00	[illegible]	[illegible]
British model	XU206A00	[illegible]	[illegible]

	Japanese models	U.S & Canadian models	General export model & British model
F2300 F2305	[illegible]	[illegible]	[illegible]
F2303	[illegible]	[illegible]	[illegible]
F2304	[illegible]	[illegible]	[illegible]
F2304	[illegible]	[illegible]	[illegible]

(マ) : Mylar Capacitor
(セ) : Ceramic Capacitor
(半セ) : Semiconductive Cera Cap
(PP) : Polypropylene Capacitor
: Flame Proof Carbon Resistor
: Metal Oxide Film Resistor

•NJM7805FA(XJ607A00) REGULATOR +5V	•NJM7815FA(XD853A00) REGULATOR +15V	•NJM7915FA(XD854A00) REGULATOR -15V
1 : OUTPUT 2 : COMMON 3 : INPUT	1 : INPUT 2 : COMMON 3 : OUTPUT	1 : COMMON 2 : INPUT 3 : OUTPUT
•S4VB(H001090) DIODE STACK	•D5FB20(H001370) DIODE STACK	•S1VB20(VS197600) DIODE STACK

■ **WARNING**
Components having special characteristics are marked △ and must be replaced with parts having specifications equal to those originally installed.

Note : See parts list for details of circuit board component parts.

Downloaded from www.Manualslib.com manuals search engine