Clavinova®

CVP-700

SERVICE MANUAL



CONTENTS

SPECIFICATIONS 3
CIRCUIT BOARD LAYOUT 4
PANEL LAYOUT 6
BLOCK DIAGRAM 7
DISASSEMBLY PROCEDURE 8
LSI PIN DESCRIPTION 15
IC BLOCK DIAGRAM 22
CIRCUIT BOARDS 23
TEST PROGRAM 30
INSPECTIONS 31
FACTORY SETTINGS 31
MESSAGES 32
MIDI IMPLEMENTATION CHART 38
MIDI DATA FORMAT 40
PARTS LIST
OVERALL CIRCUIT DIAGRAM

CL 001632

YAMAHA
HAMAMATSU, JAPAN
0.9K-2502 Printed in Japan '99.10

IMPORTANT NOTICE

This manual has been provided for the use of authorized Yamaha Retailers and their service personnel. It has been assumed that basic service procedures inherent to the industry, and more specifically Yamaha Products, are already known and understood by the users, and have therefore not been restated.

WARNING: Failure to follow appropriate service and safety procedures when servicing this product may result in personal injury, destruction of expensive components and failure of the product to perform as specified. For these reasons, we advise all Yamaha product owners that all service required should be performed by an authorized Yamaha Retailer or the appointed service representative.

IMPORTANT: This presentation or sale of this manual to any individual or firm does not constitute authorization, certification, recognition of any applicable technical capabilities, or establish a principal-agent relationship of any form.

The data provided is belived to be accurate and applicable to the unit(s) indicated on the cover. The research engineering, and service departments of Yamaha are continually striving to improve Yamaha products. Modifications are, therefore, inevitable and changes in specification are subject to change without notice or obligation to retrofit. Should any discrepancy appear to exist, please contact the distributor's Service Division.

WARNING: Static discharges can destroy expensive components. Discharge any static electricity your body may have accumulated by grounding yourself to the ground bus in the unit (heavy gauge black wires connect to this bus).

IMPORTANT: Turn the unit OFF during disassembly and parts replacement. Recheck all work before you apply power to the unit.

WARNING: CHEMICAL CONTENT NOTICE!

The solder used in the production of this product contains LEAD. In addition, other electrical/electronic and/or plastic (where applicable) components may also contain traces of chemicals found by the California Health and Welfare Agency (and possibly other entities) to cause cancer and/or birth defects or other reproductive harm.

DO NOT PLACE SOLDER, ELECTRICAL/ELECTRONIC OR PLASTIC COMPONENTS IN YOUR MOUTH FOR ANY REASON WHAT SO EVER!

Avoid prolonged, unprotected contact between solder and your skin! When soldering, do not inhale solder fumes or expose eyes to solder/flux vapor!

If you come in contact with solder or components located inside the enclosure of this product, wash your hands before handling food.

■ WARNING

Components having special characteristics are marked ⚠ and must be replaced with parts having specification equal to those originally installed.

■ SPECIFICATIONS

KEYBOARD		88 keys (A–1 — C7)
TONE GENERATOR		AWM (Advanced Wave Memory)
MAXIMUM SIMULTANEOUS POLYPHONY		64
VOICES		**Clavinova voices:** 224 **Organ Flutes voices:** 6 **XG voices:** 480 **Drum Kits:** 13 sets **Voice Groups:** Piano, Electric Piano, Guitar, Synthesizer, Organ, Strings/Choir, Brass, Sax/Flute, Bass, Percussion, Ensemble, XG Dual, Split
EFFECTS		**Reverb:** 12 types **Chorus:** 9 types **Effect:** 50 types x 2 **Vocal Harmony:** 42 types
TONE CONTROLS		Master Equalizer
ACCOMPANIMENT STYLES		**Rhythm Styles:** 147 **Pianist Styles:** 35 **Custom Styles:** 12 **Style Groups:** 8Beat, 16Beat, Ballad, Dance, Rock/R&B, Swing/Jazz, Latin, Country, Ballroom, Trad/Waltz, Pianist, Disk/Custom **Controls:** Intro, Main A, Main B ,Main C, Main D, Auto-fill, Ending, Fade in/out, Synchro, Start/Stop, Tap, Metronome, Tempo –/+
AUTO ACCOMPANIMENT		**Music Database:** 534 Single Finger, Multi Finger, Fingered1, Fingered2, Full Keyboard Acmp Assist, Harmony, One Touch Setting, Chord Assist, Synchro Stop, Individual Part Volume Control (Mixer)
REGISTRATION		Bank A – E x 4 memory locations (20), Freeze, Registration Name
SONG PLAY MODE		Song Playback, Repeat, Volume control of individual Parts (Mixer) **Controls:** Song, Play/Stop, Rewind, Fast forward, Pause **Guide Control:** Easy Play, Next Note, Sound Repeat Lyric Display, Piano Roll Display, Keyboard Guide Lamps
SONG RECORD MODE		Quick Recording, Track Recording, Chord Sequence, Step Edit, Song Name, Track Edit, Initial Edit, Setup Memory, Vocal Harmony Memory
LCD/CONTROLS		320 x 240 dot liquid crystal display, Contrast dial, Beat lamp, Function button, Mixer button, Page ◄► buttons, Direct Access button, LCD buttons, data dial, –/+ buttons, Exit button
VOLUME CONTROLS		Master volume, Acmp/Song volume
DEMO/HELP		50 Demo Songs; 5 help languages (English, Japanese, German, French, Spanish)
DISK DRIVE		3.5-inch micro floppy disk drive
PEDAL CONTROLS	RIGHT	Damper, Pitch Bend
	CENTER	Sostenuto
	LEFT	Soft, Damper, Start/Stop, Harmony, Registration, Registration Freeze, Ending/rit, Break, Break Fill, Bass Hold, Fade In/Out, Effect 1/2 Variation, Glide
JACKS AND TERMINALS		PHONES jacks x 2, AUX OUT jacks (L/L+R, R), AUX IN jacks (L/L+R, R), EXP.PEDAL jack, MIC. jack, VIDEO OUT jack, TO HOST terminal, MIDI terminals (IN, OUT, THRU)
INPUT/OUTPUT SPECIFICATIONS		**AUX OUT:** Output Impedance: 600 Ω **AUX IN:** Input Impedance: 10 kΩ; Input Sensitivity: –10 dBm
MAIN AMPLIFIERS		120 W (60 W x 2)
SPEAKERS		16 cm x 2, 5 cm x 2 3 cm x 2
DIMENSIONS (W x D x H)	Lid down	1417 mm x 870 mm x 908 mm (55-3/4" x 34-1/4" x 35-3/4")
	Lid up	1417 mm x 870 mm x 1253 mm (55-3/4" x 34-1/4" x 49-3/8")
WEIGHT		86.5 kg (190 lbs., 11 oz.)
Output Level		Refer to TEST PROGRAM section of this manual.

■ CIRCUIT BOARD LAYOUT

Location	Part List Ref No.	Connector Assembly	Destination		Remarks
(490)	MAIN UNIT [490]	FDD-SIG	DM-CN1	FDD	34P-900L
(500)	MAIN UNIT [500]	KRD-KRD	HP-CN2	PL-CN1	2P-300L
(510)	MAIN UNIT [510]	MIC-LF	DM-CN11	MIC-CN300	5P
(520)	MAIN UNIT [520]	MIDI-LF	DM-CN7	JACK1-CN4	7P
(530)	MAIN UNIT [530]	MK-LF	DM-CN8	Keyboard	8P
(540)	MAIN UNIT [540]	KRD-KRD	DM-CN10	EQ-JACK-CN210	16P-250L
(550)	MAIN UNIT [550]	KRD-KRD	EQ-JACK-CN220	HP-CN1	7P-450L
(570)	MAIN UNIT [570]	KRD-KRD	EQ-JACK-CN240	MA120-CN6	9P-1100L
(580)	MAIN UNIT [580]	KRD-KRD	DM-CN4	MA120-CN4	7P-950L
(590)	MAIN UNIT [590]	PK	DM-CN6	PEDAL-CN1	6P
(600)	MAIN UNIT [600]	FDD (power supply) -LF	MA120-CN3	FDD	3P
(610)	MAIN UNIT [610]	NW	NW1-CN3	NETWORK-CN1	4P
(620)	MAIN UNIT [620]	SP	NW1-CN1	MA120-CN5	4P
(630)	MAIN UNIT [630]	HP (Ground wire)	HP-CN3	Keybed	2P
(635)	MAIN UNIT [635]	MIC (Ground wire)	MIC-CN301	Keybed	2P
(A)	CONTROL PANEL [360]	VOL	MV-CN301	EQ-JACK-CN200	8P-400L
(B)	CONTROL PANEL [350]	PN-LF	DM-CN9	PNL-CN1	14P
(C)	LCD [40]	LCD-FL	DM-CN2	LCD	14P
(D)	LCD [60a]	B-LIGHT	DM-CN3	INV-CN2	2P-500L (U)
	LCD [60]				2P-380L (E)
(E)	CONTROL PANEL [370]	MON-SP	NETWORK-CN2	MON-SP L/R	4P
(F)	SPEAKER BOX [120]	SP	NW1-CN2	W-SP, TW-SP	8P
(G)			MA120-CN1	Transformer (Secondary)	8P
(H)			FU120L-CN2	Transformer (Primary)	2P
(I)	END BLOCK [50]	P-SW	FU120L-CN1	P-SW	2P
(J)	CONTROL PANEL [330]	KRD-KRD	PNL-CN5	PNGL-CN101	12P-200L
(K)			PNR-CN3	PNGR-CN201	
(L)	CONTROL PANEL [340]	KRD-KRD	PNL-CN6	MV-CN302	3P-150L
(M)	CONTROL PANEL [320]	KRD-KRD	PNL-CN4	PNR-CN2	10P-500L
(N)	CONTROL PANEL [310]	KRD-KRD	PNL-CN3	PNR-CN1	16P-400L

Note1: The meaning of symbols.

 : CB81751 Cabel Holder

 : VU89130 (SP BOX)
VN43020 (Keybed) Cord Binder (Vinyl Tie)

 : V348160 Filament Tape

 : CB06925 Cord Holder

 : Ferrite Core

: LUG Terminal

Note2: FDD-SIG wire harness shall be installed with its connector guide looks down.

Note3: C wire harness shall be drawn around as shown the dotted line (For U/C model only).

● Main Unit

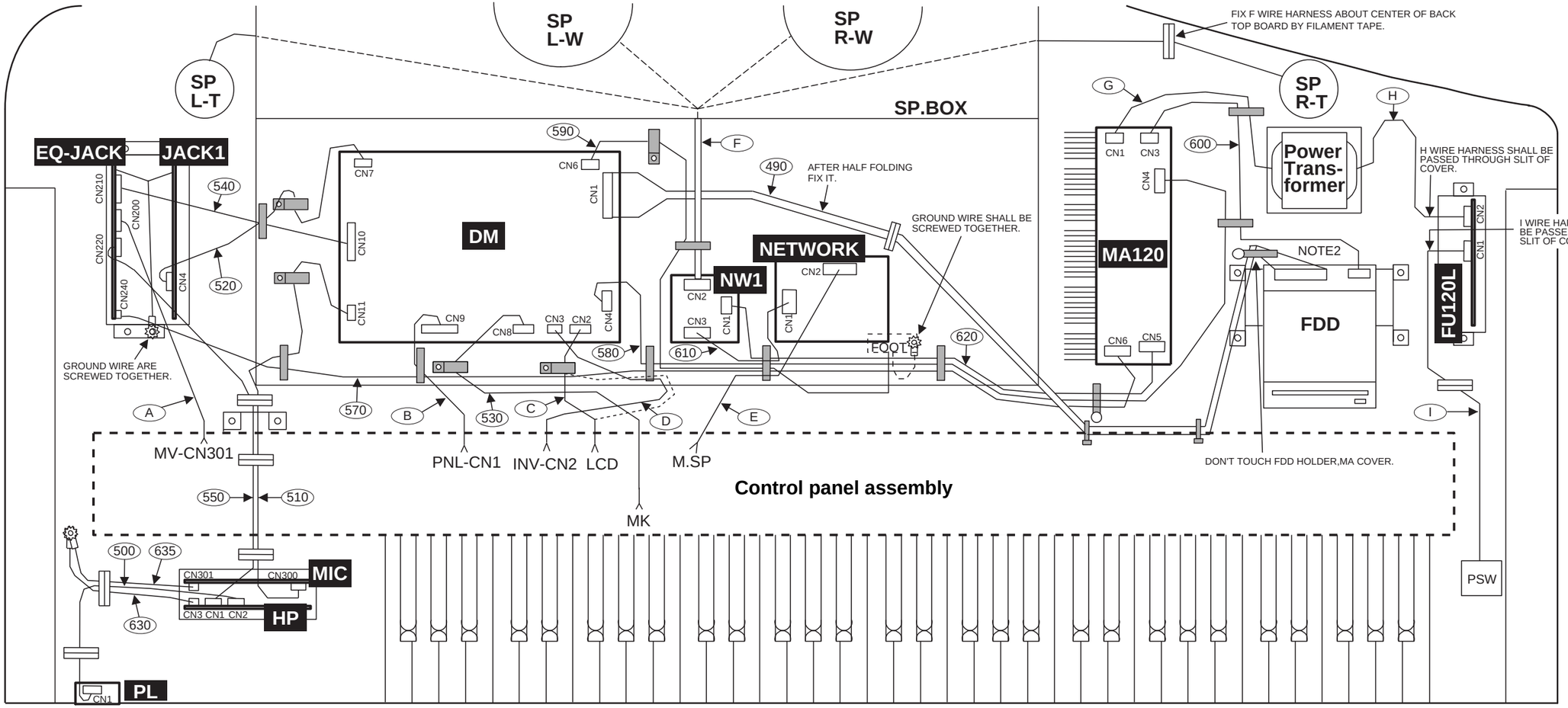

● Control Panel Assembly

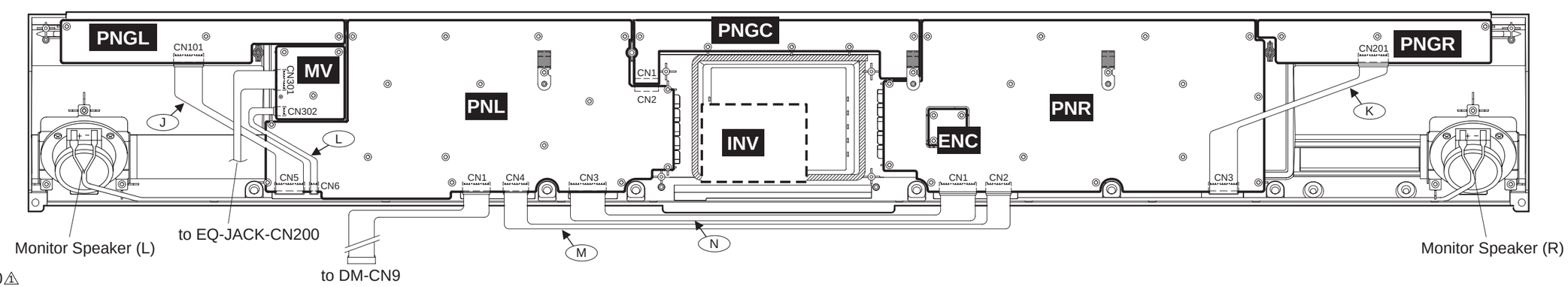

2NC-V443770⚠

■ PANEL LAYOUT

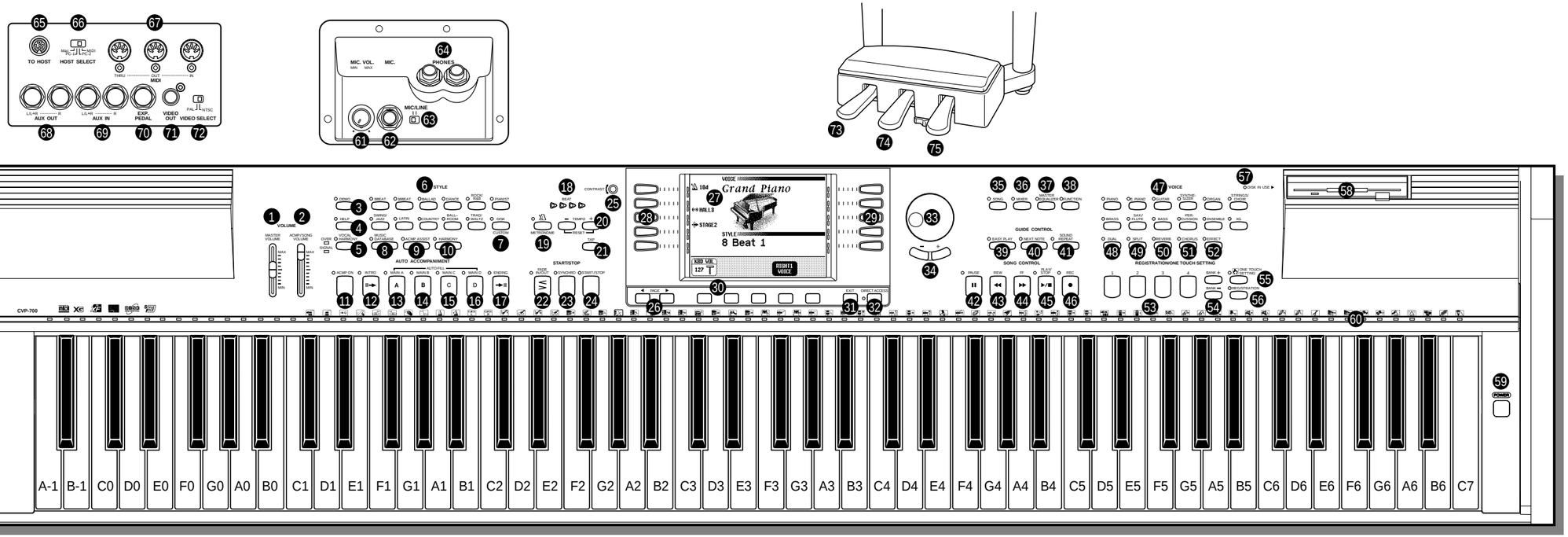

Volume Section
1 [MASTER VOLUME] knob
2 [ACMP/SONG VOLUME] knob

Special Mode Control Section
3 [DEMO] button
4 [HELP] button
5 [VOCAL HARMONY] button

Accompaniment Style Section
6 STYLE buttons
7 [DISK/CUSTOM] button
8 [MUSIC DATABASE] button
9 [ACMP ASSIST] button
10 [HARMONY] button

Auto Accompaniment Section
11 [ACMP ON] button
12 [INTRO] button
13 [MAIN A] button
14 [MAIN B] button
15 [MAIN C] button
16 [MAIN D] button
17 [ENDING] button

Metronome Section
18 [BEAT] button
19 [METRONOME] button
20 TEMPO [–], [+] buttons
21 [TAP] button

Start/Stop Section
22 [FADE IN/OUT] button
23 [SYNCHRO] button
24 [START/STOP] button

Display Control Section
25 [CONTRAST] knob
26 PAGE [◀], [▶] buttons
27 LCD display
28 Left LCD buttons
29 Right LCD buttons
30 LCD buttons
31 [EXIT] button
32 [DIRECT ACCESS] button
33 Data dial knob
34 [–], [+] buttons

Main Mode Control Section
35 [SONG] button
36 [MIXER] button
37 [MASTER EQUALIZER] button
38 [FUNCTION] button

Guide Control Section
39 [EASY PLAY] button
40 [NEXT NOTE] button
41 [SOUND REPEAT] button

Song Control Section
42 [PAUSE] button
43 [REW] button
44 [FF] button
45 [PLAY/STOP] button
46 [REC] button

Voice Section
47 VOICE buttons
48 [DUAL] button
49 [SPLIT] button
50 [REVERB] button
51 [CHORUS] button
52 [EFFECT] button

Registration/One Touch Setting Section
53 [1] through [4] buttons
54 BANK [–] [+] buttons
55 [ONE TOUCH SETTING] button
56 [REGISTRATION] button
57 [DISK IN USE] lamp
58 Floppy disk drive (3.5")
59 [POWER] switch
60 Keyboard guide lamps

Microphone and Headphone Connectors
61 [MIC. VOL.] jacks
62 [MIC.] jacks
63 [MIC/LINE] switch
64 [PHONES] jacks

Connectors
65 [TO HOST] terminal
66 [HOST SELECT] switch
67 MIDI [IN], [OUT], [THRU] terminals
68 AUX OUT [L/L+R], [R] jacks
69 AUX IN [L/L+R], [R] jacks
70 [EXP. PEDAL] jack
71 [VIDEO OUT] jack
72 [VIDEO SELECT] switch

Pedals
73 Soft pedal
74 Sostenuto pedal
75 Damper pedal

■ BLOCK DIAGRAM

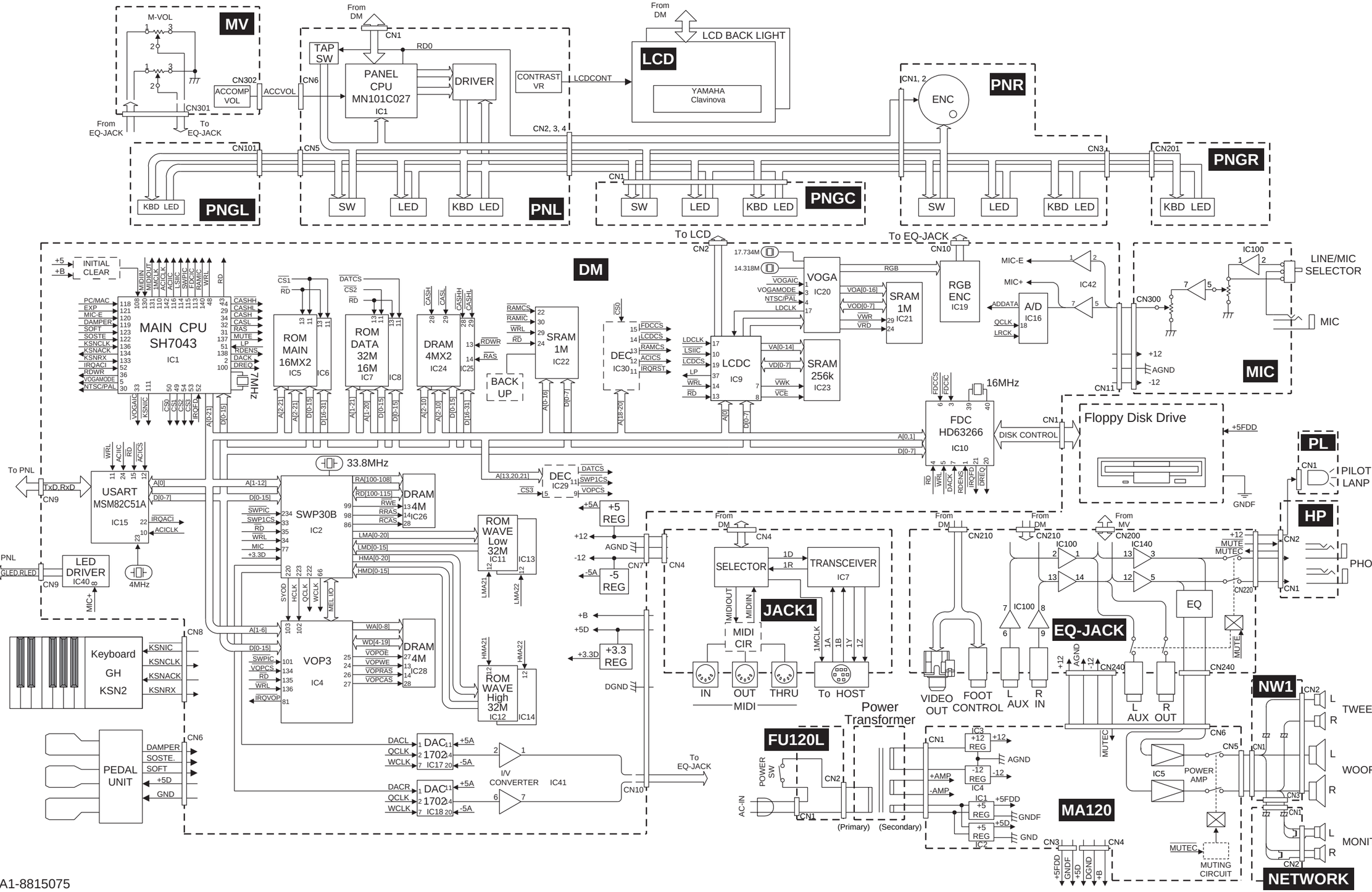

28CA1-8815075

■ DISASSEMBLY PROCEDURE

1 Inner Board Assembly and Top Board S Assembly

1-1 Raise up the music rest and set it. (Fig. 1)

1-2 Open the lid carefully and remove the ten (10) screws marked [790]. The inner board assembly can then be removed. (Fig. 1)

CAUTION

Be careful not to catch your fingers when raising or lowering the lid.

Make sure that the top board assembly is fixed firmly with your hand or by another tool while removing the screws.

Do not attempt to open the lid too wide, since this can cause excessive force to be imposed on the adjustment mechanism, possibly resulting in damage to the mechanism or even injury.

1-3 After removing the inner board assembly, raise the lid stay and lower the lid carefully so that the end of the stay fits into the recess of the lid. (Fig. 1)

1-4 Shut the key cover assembly, slide the top board S assembly to the front and lift up. The top board S assembly can then be removed. (Fig. 1)

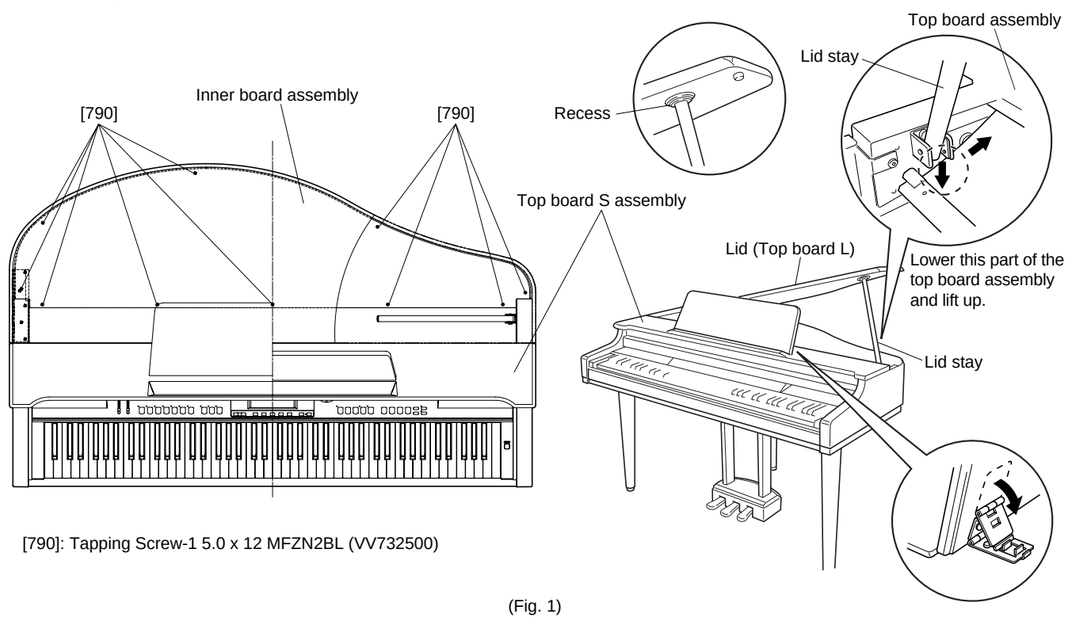

[790]: Tapping Screw-1 5.0 x 12 MFZN2BL (VV732500)

(Fig. 1)

2 Circuit Boards and Units on the Keybed

After removing the top board S assembly, shut the key cover assembly. This will give you access to the circuit boards and the units located on the keybed. Remove the following screws, each circuit board and unit can then be removed.

Circuit Board and Unit	Ref. No.	Screw			QTY
DM cover	660A	Bind Head Tapping Screw-1	3.5 x 12 MFZN2BL	(EP030340)	5
DM	765A	Bind Head Tapping Screw-B	3.0 x 8 MFZN2BL	(EP600190)	9
Shield cover	660B	Bind Head Tapping Screw-1	3.5 x 12 MFZN2BL	(EP030340)	2
MA120 assembly	660C	Bind Head Tapping Screw-1	3.5 x 12 MFZN2BL	(EP030340)	2
FU cover	660D	Bind Head Tapping Screw-1	3.5 x 12 MFZN2BL	(EP030340)	2
FU120L assembly	660E	Bind Head Tapping Screw-1	3.5 x 12 MFZN2BL	(EP030340)	2
Power transformer	780	Truss Head Screw	4.0 x 14 MFZN2BL	(VB931700)	4
JACK assembly	660F	Bind Head Tapping Screw-1	3.5 x 12 MFZN2BL	(EP030340)	4
NW1	850A	Bind Head Tapping Screw-1	3.5 x 20 MFZN2Y	(EP030470)	4
NETWORK	850B	Bind Head Tapping Screw-1	3.5 x 20 MFZN2Y	(EP030470)	4

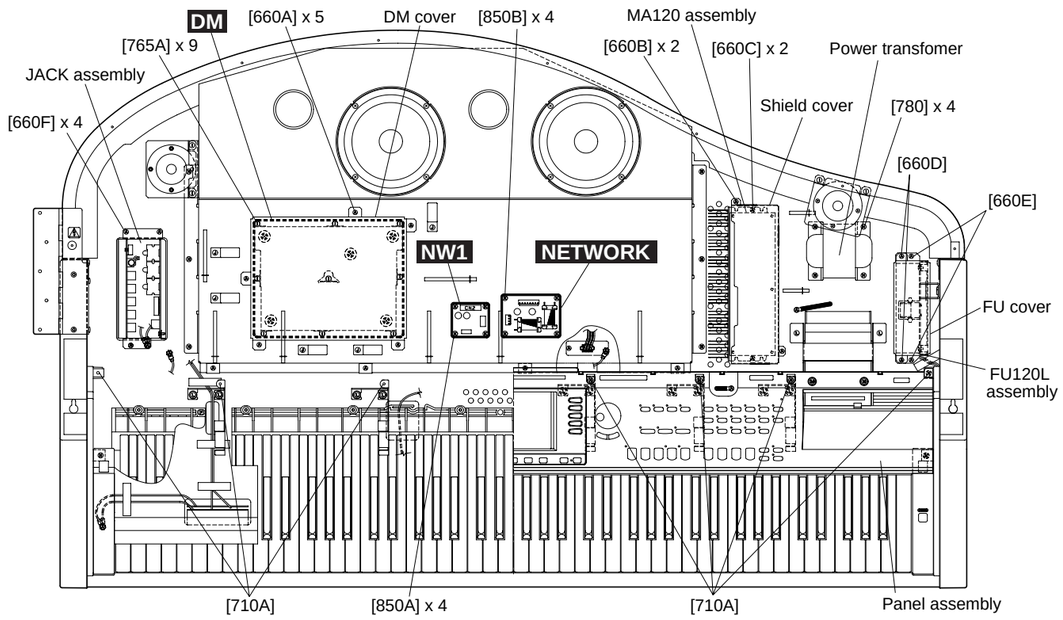

[710]: Bind Head Tapping Screw-B 4.0 x 10 MFZN2BL (EP600240)

(Fig. 2)

3 Jack Assembly

3-1 Remove the inner board assembly and the top board S assembly. (See Procedure 1.)

3-2 Remove the jack assembly. (See Procedure 2.)

3-3 Remove the four (4) screws marked [40A]. The JACK1 circuit board can then be removed. (Fig. 3)

3-4 Remove the five (5) hexagonal nuts marked [50]. The EQ-JACK circuit board can then be removed. (Fig. 3)

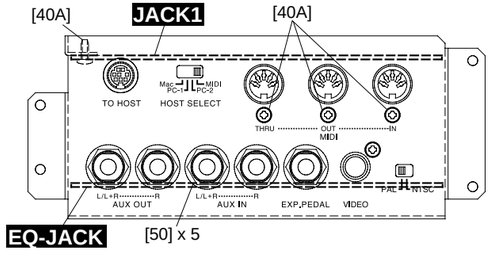

[40]: Bind Head Tapping Screw-B 3.0 x 8 MFZN2BL (EP600190)
[50]: Hexagonal Nut 12.0 14 x 2 MFZN2BL (VB508600)

(Fig. 3)

4 Key Cover Assembly

4-1 Remove the inner board assembly and the top board S assembly. (See Procedure 1.)

4-2 Remove the screw marked [765B]. The rack cover can then be removed. (Fig. 4)

4-3 Set either end of the rod at the openings guide and then lift the key cover assembly.

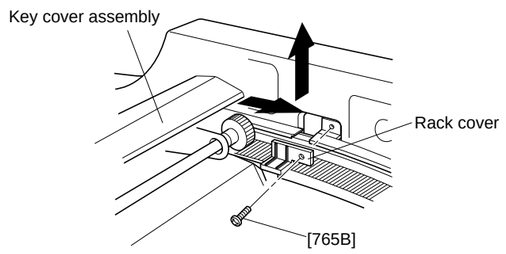

[765]: Bind Head Tapping Screw-B 3.0 x 8 MFZN2BL (EP600190)

(Fig. 4)

5 FDD Assembly

5-1 Remove the inner board assembly and the top board S assembly. (See Procedure 1.)

5-2 Remove the key cover assembly. (See Procedure 4.)

5-3 Remove the two (2) screws marked [720A] and the two (2) screws marked [730A]. The FDD assembly can then be removed. (Fig. 5)

5-4 Remove the four (4) screws marked [40B]. The floppy disk drive unit can then be removed. (Fig. 5)

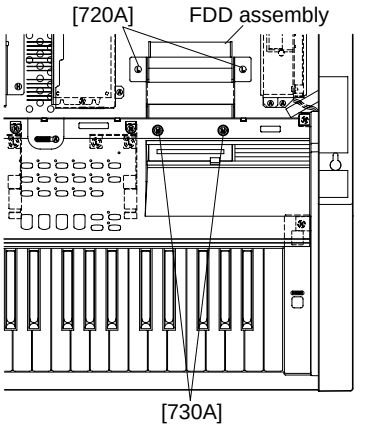

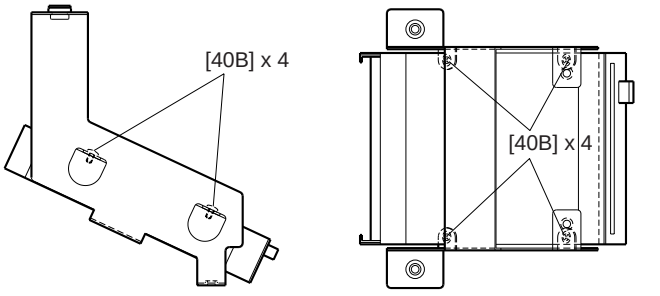

[720]: PW Head Tapping Screw-1 3.5 x 18-10 MFZN2Y (VZ057000)
[730]: Bind Head Screw 4.0 x 10 MFZN2Y (03753440)
[40]: Bind Head Screw 3.0 x 5 MFZN2Y (EG330150)

(Fig. 5)

6 Control Panel Assembly

6-1 Remove the inner board assembly and the top board S assembly. (See Procedure 1.)
6-2 Remove the key cover assembly. (See Procedure 4.)
6-3 Remove the FDD assembly. (See Procedure 5.)
6-4 Remove the five (5) screws marked [760A]. The right and left side of the rack assembly can then be removed. (Fig. 6)
6-5 Remove the seven (7) screws marked [710A]. (Fig. 2)
6-6 The control panel assembly can then be removed.

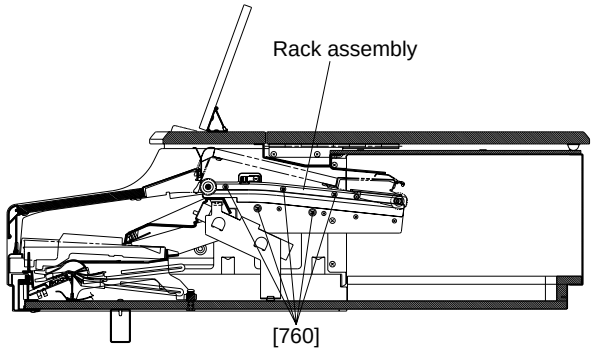

[760]: Bind Head Tapping Screw-B 3.0 x 12 MFZN2Y (VE683000)

(Fig. 6)

7 Circuit Boards and Units on the Panel Assembly

Remove the following screws, each circuit board and unit can then be removed. (Fig. 7)

Circuit Board and Unit	Ref. No.	Screw		QTY
PNL	460A	Bind Head Tapping Screw-B 3.0 x 8 MFZN2Y	(EP600250)	18
PNR	460B	Bind Head Tapping Screw-B 3.0 x 8 MFZN2Y	(EP600250)	15
PNGL	460C	Bind Head Tapping Screw-B 3.0 x 8 MFZN2Y	(EP600250)	3
PNGC	460D	Bind Head Tapping Screw-B 3.0 x 8 MFZN2Y	(EP600250)	6
PNGR	460E	Bind Head Tapping Screw-B 3.0 x 8 MFZN2Y	(EP600250)	3
MV	460F	Bind Head Tapping Screw-B 3.0 x 8 MFZN2Y	(EP600250)	3
ENC	460G	Bind Head Tapping Screw-B 3.0 x 8 MFZN2Y	(EP600250)	3
Monitor speaker (R)	460H	Bind Head Tapping Screw-B 3.0 x 8 MFZN2Y	(EP600250)	3
Monitor speaker (L)	460I	Bind Head Tapping Screw-B 3.0 x 8 MFZN2Y	(EP600250)	3
INV Cover	460J	Bind Head Tapping Screw-B 3.0 x 8 MFZN2Y	(EP600250)	2
	500A	Bind Head Tapping Screw-B 3.0 x 10 MFZN2BL	(EP600140)	2
INV	460K	Bind Head Tapping Screw-B 3.0 x 8 MFZN2Y	(EP600250)	4
LCD assembly	460L	Bind Head Tapping Screw-B 3.0 x 8 MFZN2Y	(EP600250)	4

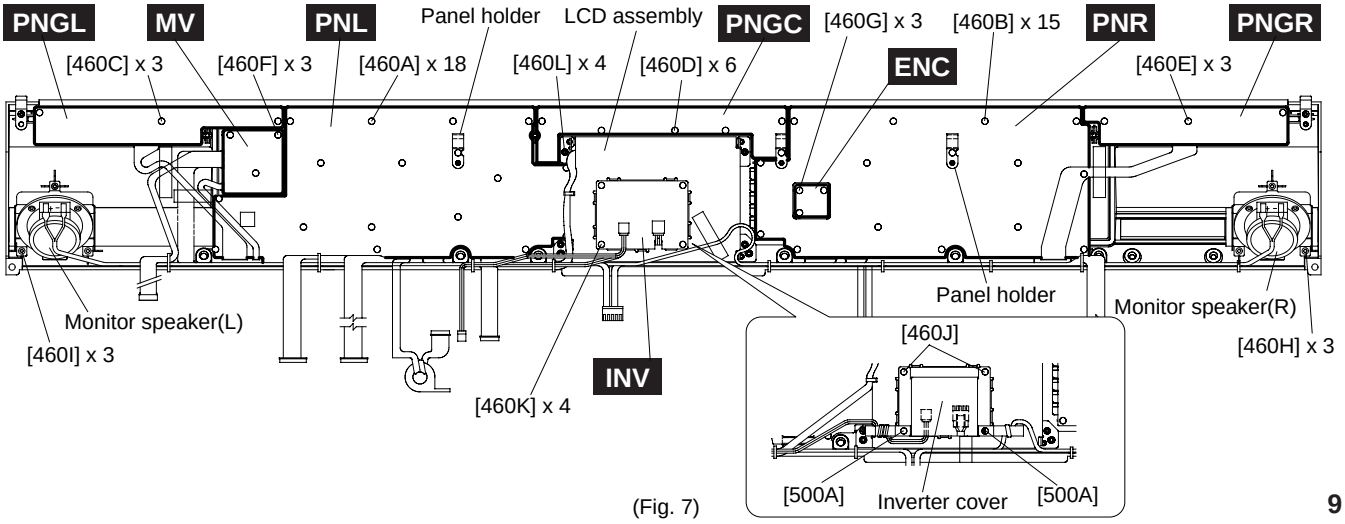

(Fig. 7)

8 POWER Switch

8-1 Remove the inner board assembly and the top board S assembly. (See Procedure 1.)
8-2 Remove the key cover assembly. (See Procedure 4.)
8-3 Remove the control panel assembly. (See Procedure 6.)
8-4 Remove the screw marked [710B]. The right end block assembly can then be removed. (Fig. 9)
8-5 Remove the two (2) screws marked [30]. The POWER switch can then be removed. (Fig. 8)
8-6 Pull the knob of the switch. (Fig. 8)

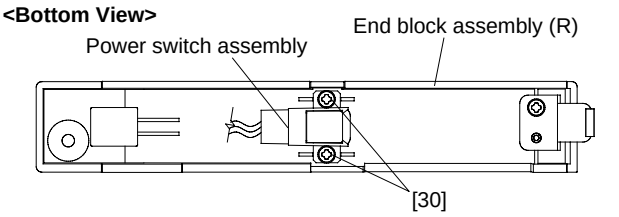

[30]: Bind Head Tapping Screw-B 3.0 x 8 MFZN2BL (EP600190)

(Fig. 8)

9 Main Speakers

9-1 Remove the inner board assembly and the top board S assembly. (See Procedure 1.)
9-2 Remove the four (4) screws marked [170]. The main speaker L can then be removed. (Fig. 9)

* The right and left speakers can be removed in the same manner.

10 Keyboard Assembly

10-1 Remove the inner board assembly and the top board S assembly. (See Procedure 1.)
10-2 Remove the key cover assembly. (See Procedure 4.)
10-3 Remove the control panel assembly. (See Procedure 6.)
10-4 Remove the right end block. (See Procedure 8-4.)
10-5 Remove the screw marked [710C]. The left end block assembly can then be removed. (Fig. 9)
10-6 Remove the ten (10) screws marked [720B]. The five (5) control panel holders can then be removed. (Fig. 9)
10-7 Remove the two (2) screws marked [700] and the nine (9) screws marked [690]. The keyboard assembly can then be removed. (Fig. 9)

* When you take the keyboard unit out of the main unit, slide it backward and hold the middle of it. Lift the keyboard unit from the front and take it out of the main unit as shown in the figures. (Fig. 10 and Fig. 11)
* Do not hold both ends of the keyboard.
* When mounting the keyboard assembly, tighten screws in this order: [690] and [700].

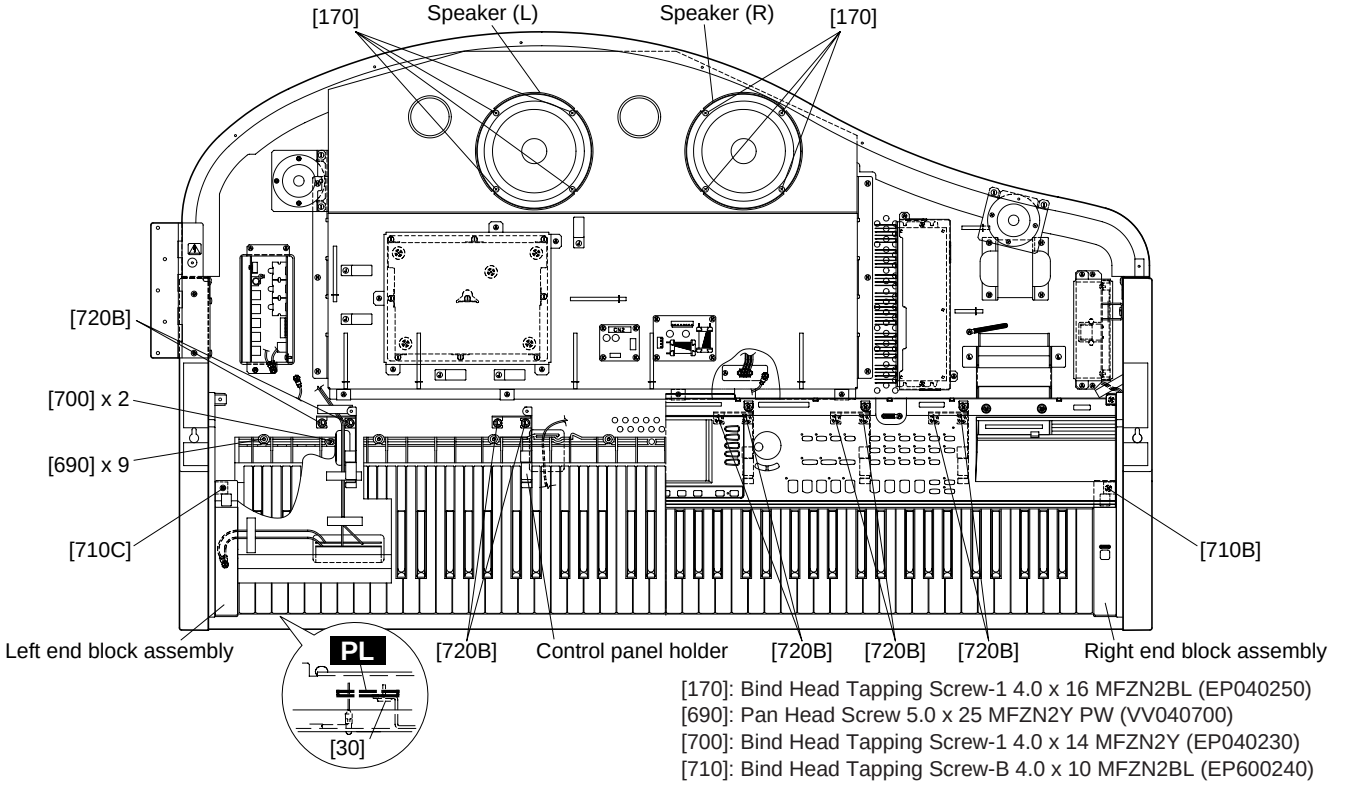

[30]: Bind Head Screw-B 3.0 x 6 MFZN2BL (EP600230)

[170]: Bind Head Tapping Screw-1 4.0 x 16 MFZN2BL (EP040250)
[690]: Pan Head Screw 5.0 x 25 MFZN2Y PW (VV040700)
[700]: Bind Head Tapping Screw-1 4.0 x 14 MFZN2Y (EP040230)
[710]: Bind Head Tapping Screw-B 4.0 x 10 MFZN2BL (EP600240)
[720]: PW Head Tapping Screw-1 3.5 x 18-10 MFZN2Y (VZ057000)

(Fig. 9)

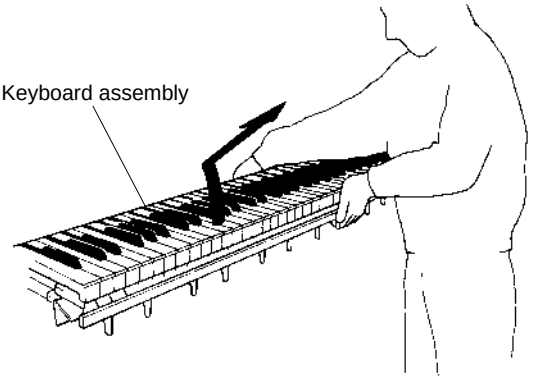

(Fig. 10)

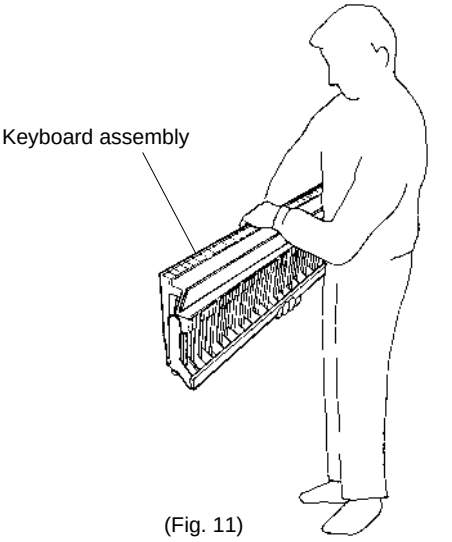

(Fig. 11)

11 Arm Assembly

11-1 Remove the inner board assembly and the top board S assembly. (See Procedure 1.)
11-2 Remove the key cover assembly. (See Procedure 4.)
11-3 Remove the control panel assembly. (See Procedure 6.)
11-4 Remove the keyboard assembly. (See Procedure 10.)
11-5 Remove the five (5) screws marked [680], the six (6) screws marked [860] and the four (4) screws marked [640]. The arm assembly can then be removed. (Fig. 12)

* The right and left arm assembly can be removed in the same manner.

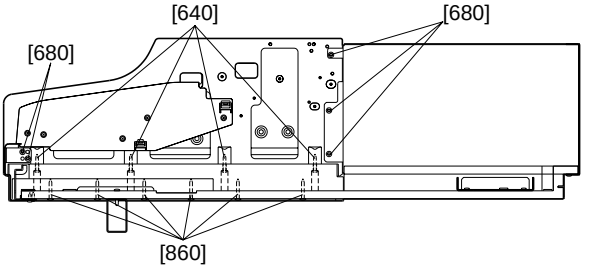

[640]: Bind Head Tapping Screw-1 4.0 x 25 MFZN2BL (VF573000)
[680]: Bind Head Tapping Screw-B 4.0 x 14 MFZN2BL (VR525900)
[860]: Truss Head Tapping Screw-1 4.0 x 35 MFZN2BL (23720900)

(Fig. 12)

12 PL Circuit Board

12-1 Remove the inner board assembly and the top board S assembly. (See Procedure 1.)
12-2 Remove the key cover assembly. (See Procedure 4.)
12-3 Remove the control panel assembly. (See Procedure 6.)
12-4 Remove the keyboard assembly. (See Procedure 10.)
12-5 Remove the screw marked [30]. The PL circuit board can then be removed. (Fig. 9)

13 MIC, HP Circuit Board

13-1 Remove the four (4) screws marked [670]. The Mic. & Phones unit can then be removed. (Fig. 13)
13-2 Remove the two (2) hexagonal nuts marked [40C]. The HP circuit board can then be removed. (Fig. 13)
13-3 Remove the hexagonal nut marked [40D] and the knob. The MIC circuit board can then be removed. (Fig. 13)

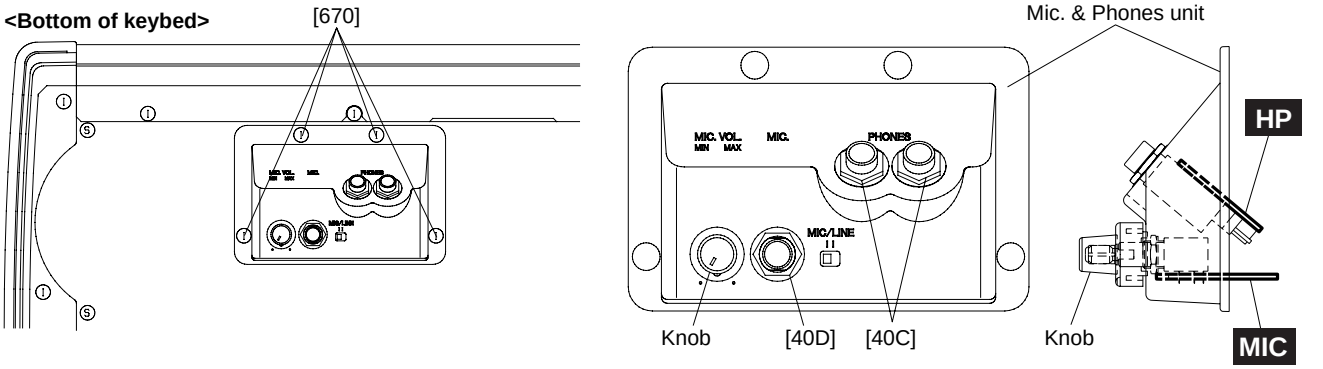

[670]: Bind Head Tapping Screw-1 3.5 x 14 MFZN2BL (EP030250) [40]: Hexagonal Nut 12.0 14 x 2 MFZN2BL (VB508600)

(Fig. 13)

14 Pedal Assembly

14-1 Remove the four (4) screws marked [S4A], located on the bottom of the keybed. The pedal assembly with the pedal poles can then be removed. (Fig. 14)

CAUTION

Be careful not to damage the PK connector assembly, since the PK connector assembly is still connected to the main unit.

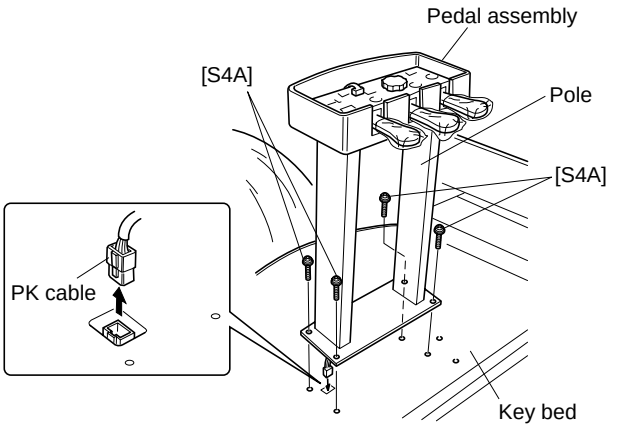

[S4]: Cup Screw 5.0 x 20 MFZN2BL (VD614900)

(Fig. 14)

14-2 Pull the PK cable off the main unit. (Fig. 14)

14-3 Lay the removed unit down on a soft blanket placed on the floor, taking care not to damage the unit or injure yourself.

14-4 Remove the eight (8) screws marked [40]. The pedal assembly can then be removed. (Fig. 15)

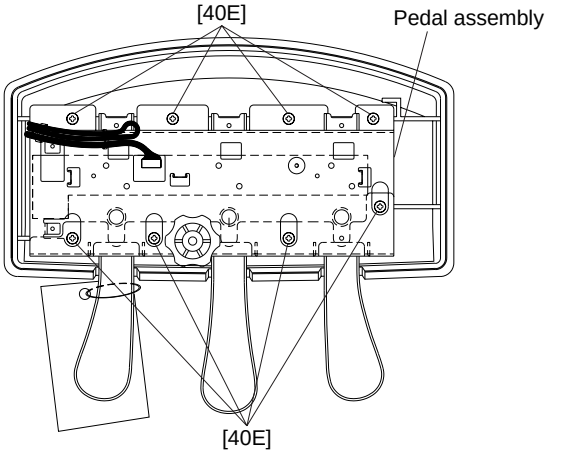

[40]: Bind Head Tapping Screw-B 4.0 x 12 MFZN2Y (VA914400)

(Fig. 15)

15 Main Unit

15-1 Remove the pedal assembly with the pedal poles. (See Procedure 14-1.)

15-2 Remove the four (4) screws marked [S4B]. The leg assembly C can then be removed. (Fig. 16)

15-3 Remove the two (2) screws marked [S4C] and the four (4) screws marked [S4D]. The leg assembly R can then be removed. (Fig. 16)

15-4 The leg assembly L can be removed in the same manner as 15-3 above. (Fig. 16)

CAUTION

The removal of the leg assemblies should be carried out by at least two persons.

Before removing the leg assemblies, lay down the instrument down on the soft blanket placed on the floor, taking care not to damage the instrument or injure yourself.

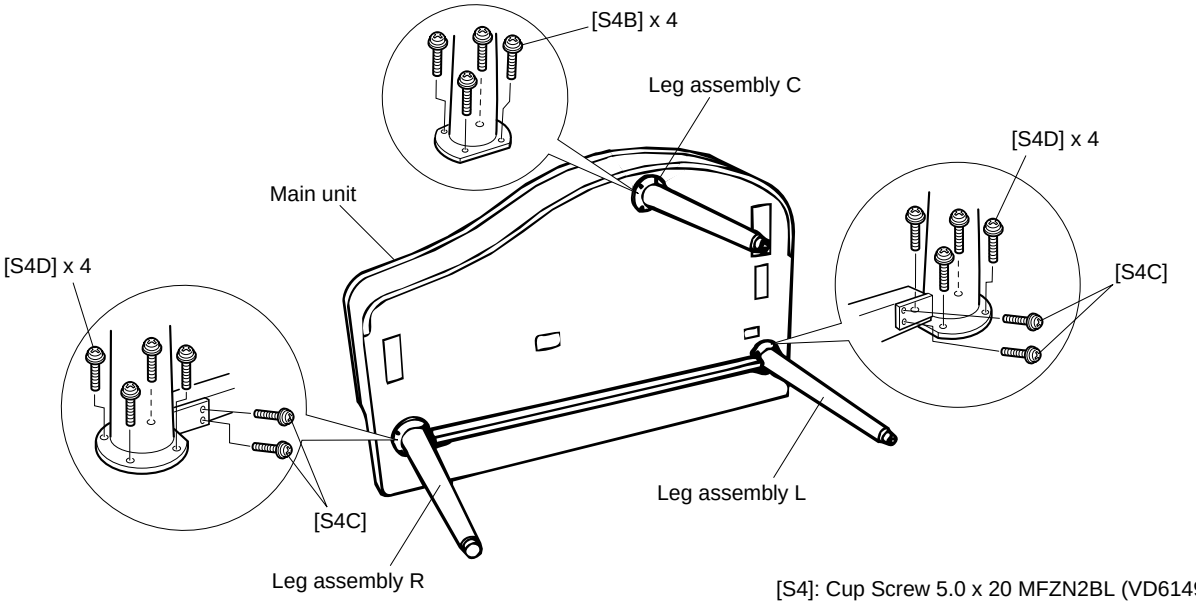

[S4]: Cup Screw 5.0 x 20 MFZN2BL (VD614900)

(Fig. 16)

16 Disassembling the Keyboard

16-1 Take the keyboard assembly out of the main unit. (See Procedure 10.)

* After inserting a round stick (Rod:TX000670) between the frame and keys, remove the circuit boards. (Fig. 17)

16-2 AEXL88 L circuit board

Remove the seven (7) screws marked [260A]. The AEXL88 L circuit board can then be removed. (Fig. 18)

16-3 AEXL88 H circuit board

Remove the ten (10) screws marked [260B]. The AEXL88 H circuit board can then be removed. (Fig. 18)

* Keys can be removed without removing the circuit boards.

* After removing the AEXL88 L and AEXL88 H circuit boards, and the rubbers can then be removed.

16-4 White Key

Insert a thin plate between white keys, near the triangle mark around the fulcrum of the key, and press down the stopper marked [A] to remove the key. (Fig. 19,20)

* Take care not to damage the key spring when removing a key.

* A black key can be removed after the white keys on either side have been removed.

16-5 Hammer, White Key

After a key has been removed, push the key spring down once to take it out of the hook. (Fig. 21)

Place the keyboard assembly upside down and peel away the stopper L88. The hammer of the white key can then be removed. (Fig. 22)

* The hammer of a black key can be removed in the same manner.

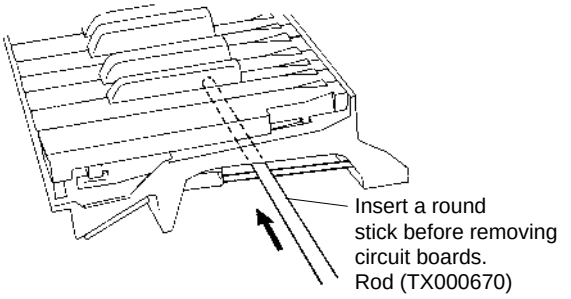

(Fig. 17)

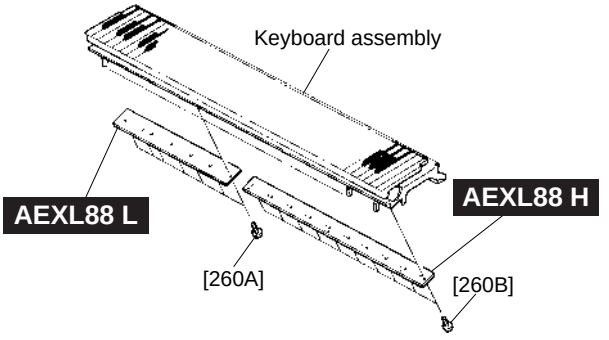

[260]: Bind Head Tapping Screw-P 3.0 x 10 MFZN2 (VT413400)

(Fig. 18)

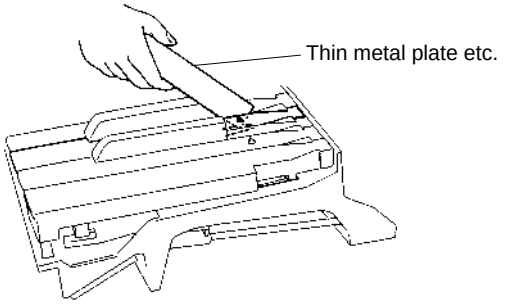

(Fig. 19)

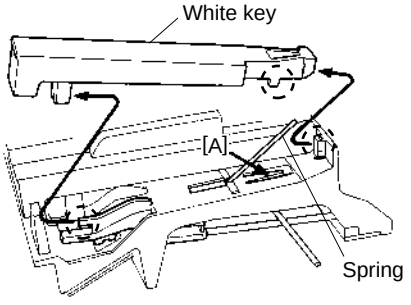

(Fig. 20)

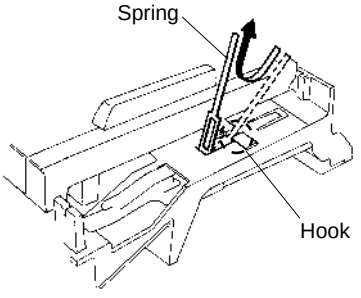

(Fig. 21)

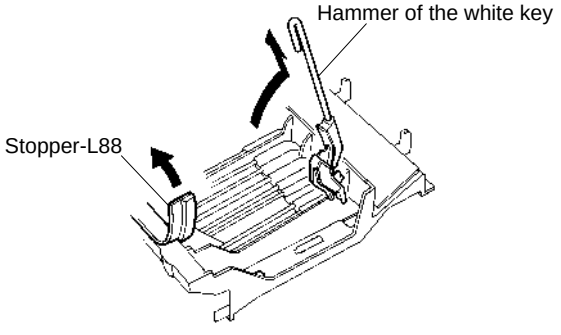

(Fig. 22)

17 Assembling the Keyboard

17-1 Hammer of a White (Black) Key
Place the keyboard assembly upside-down, insert a hammer assembly into the frame, and put the stopper (L88) on. (Fig. 23)

* There are four kinds of hammers that differ in weight.

17-2 Key Spring
Place the keyboard assembly rightside up. Fix key springs on the frame by setting one at each slit and pushing down once on each key spring. (Fig. 23, Fig. 24)

* Be careful of the direction of the spring.

17-3 White (Black) Key
After a key has been fit to part [C] and key guide, make sure that the spring is fixed to the key, and then press down part [B] of the key. (Fig. 25)

17-4 AEXL88 L circuit board
Tighten the seven (7) screws marked [260A] to fix the AEXL88 L circuit board. (Fig. 18)

17-5 AEXL88 H circuit board
Tighten the ten (10) screws marked [260B] to fix the AEXL88 H circuit board. (Fig. 18)

* Install the circuit boards in the keyboard assembly so that the hooks hold it as shown in figure 26.

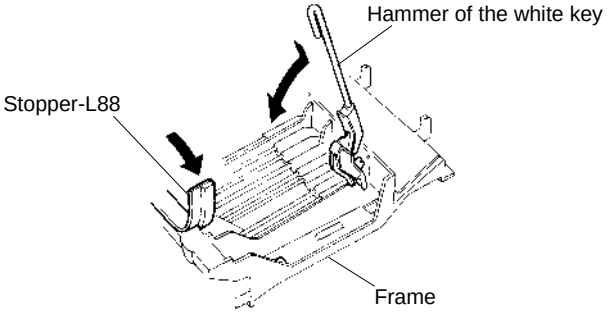

(Fig. 23)

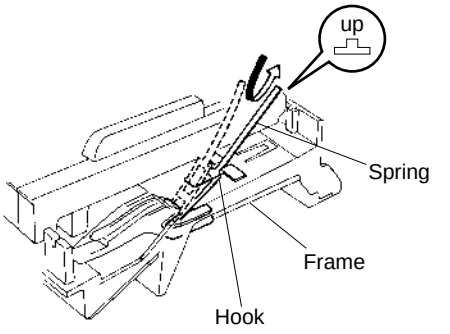

(Fig. 24)

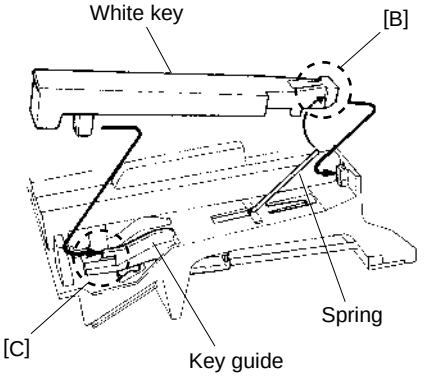

(Fig. 25)

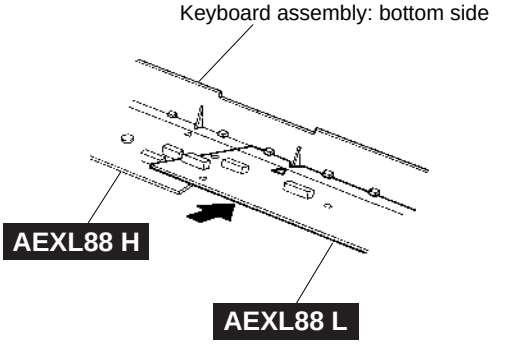

(Fig. 26)

■ LSI PIN DESCRIPTION

● HD6437043AF12F (XV599100) CPU

DM: IC001

PIN NO.	NAME	I/O	FUNCTION	PIN NO.	NAME	I/O	FUNCTION
1	/WRHH	O	HH write	73	D15	I/O	
2	/DACK0/PE14	O	DAM transfer strobe/Port E	74	D14	I/O	
3	/WRHL	O	HL write	75	D13	I/O	Data bus
4	CASHH/PA21	I/O	HH Column address strobe/Port A	76	D12	I/O	
5	DACK1/PE15	O	DMA transfer strobe/Port E	77	VCC	I	Power supply
6	VSS	I	Ground	78	D11	I/O	Data bus
7	A0	O		79	VSS	I	Ground
8	A1	O		80	D10	I/O	
9	A2	O	Address bus	81	D9	I/O	
10	A3	O		82	D8	I/O	Data bus
11	A4	O		83	D7	I/O	
12	VCC	I	Power supply	84	D6	I/O	
13	A5	O	Address bus	85	VCC	I	Power supply
14	VSS	I	Ground	86	D5	I/O	Data bus
15	A6	O		87	VSS	I	Ground
16	A7	O		88	D4	I/O	
17	A8	O		89	D3	I/O	
18	A9	O		90	D2	I/O	Data bus
19	A10	O		91	D1	I/O	
20	A11	O	Address bus	92	D0	I/O	
21	A12	O		93	VSS	I	Ground
22	A13	O		94	XTAL	I	Crystal oscillator
23	A14	O		95	MD3	I	Mode select
24	A15	O		96	EXTAL	I	Crystal oscillator
25	A16	O		97	MD2	I	Mode select
26	VCC	I	Power supply	98	NMI	-	Non-maskable interrupt
27	A17	O	Address bus	99	VCC	I	Power supply
28	VSS	I	Ground	100	PA16	I/O	Port A
29	/CASHL/PA20	I/O	HL Column address strobe/Port A	101	PA17	I/O	Port A
30	PA19	I/O	Port A	102	MD1	I	Mode select
31	/RAS/PB2	O	Row address strobe/Port B	103	MD0	I	Mode select
32	/CASL/PB3	O	Column address strobe (low) /Port B	104	PLLVCC	I	PLL Power supply
33	PA18	I/O	Port A	105	PLLCAP	I	PLL capacitor
34	/CASH/PB4	O	Column address strobe (high) /Port B	106	PLLVSS	I	PLL Ground
35	VSS	I	Ground	107	CK/PA15	I/O	Clock/Port A
36	RDWR/PB5	O	DRAM read/write /Port B	108	/RES	I	Reset
37	A18	O		109	/DREQ0/TIOC0A/PE0	I/O	DMA transfer request/MTU input capture/output compare (ch 0)/Port E
38	A19	O	Address bus	110	PE1	I/O	Port E
39	A20	O		111	/DREQ1/PE2	I/O	DMA transfer request/Port E
40	VCC	I	Power supply	112	VCC	I	Power supply
41	A21	O	Address bus	113	PE3	I/O	
42	VSS	I	Ground	114	PE4	I/O	Port E
43	/RD	O	Read	115	PE5	I/O	
44	/WDTOVF	O	Watch dog timer overflow	116	PE6	I/O	
45	D31	I/O	Data bus	117	VSS	I	Ground
46	D30	I/O	Data bus	118	AN0 /PF0	I	
47	/WRH	O	High write	119	AN1/ PF1	I	
48	/WRL	O	Low write	120	AN2 /PF2	I	Analog input/Port F
49	/CS1	O	Chip select	121	AN3 /PF3	I	
50	/CS0	O	Chip select	122	AN4 /PF4	I	
51	/IRQ3/PA9	I/O	Interrupt request/Port A	123	AN5/PF5	I	
52	/IRQ2/PA8	I/O	Interrupt request/Port A	124	AVSS	I	Analog ground
53	/CS3	O	Chip select	125	AN6/PF6	I	Analog input/ Port F
54	/CS2	O	Chip select	126	AN7/PF7	I	Analog input /Port F
55	VSS	I	Ground	127	AVREF	I	Analog reference voltage
56	D29	I/O		128	AVCC	I	Analog power supply
57	D28	I/O		129	VSS	I	Ground
58	D27	I/O	Data bus	130	RxDO	I	Receive data
59	D26	I/O		131	TxDO	O	Transmit data
60	D25	I/O		132	/IRQ0/SCK0	I	Interrupt request/Serial clock
61	VSS	I	Ground	133	RxD1	I	Receive data
62	D24	I/O	Data bus	134	TxD1	I/O	SCI
63	VCC	I	Power supply	135	VCC	I	Power supply
64	D23	I/O		136	/IRQ1/SCK1	I	Interrupt request/Serial clock
65	D22	I/O		137	PE7	I/O	
66	D21	I/O		138	PE8	I/O	Port E
67	D20	I/O	Data bus	139	PE9	I/O	
68	D19	I/O		140	PE10	I/O	
69	D18	I/O		141	VSS	I	Ground
70	D17	I/O		142	TIOC3D/PE11	I/O	MTU input capture/output compare (ch 3)/Port E
71	VSS	I	Ground	143	PE12	I/O	Port E
72	D16	I/O	Data bus	144	PE13	I/O	Port E

● **TC203C760HF-002** (XS725A00) **SWP30B** (AWM Tone Generator coped with MEG) Standard Wave Processor

DM: IC002

PIN NO.	NAME	I/O	FUNCTION	PIN NO.	NAME	I/O	FUNCTION
1	Vss		(Ground)	121	VSS		(Ground)
2	CA0	I		122	HMD0	I/O	
3	CA1	I		123	HMD1	I/O	
4	CA2	I		124	HMD2	I/O	
5	CA3	I		125	HMD3	I/O	
6	CA4	I		126	HMD4	I/O	
7	CA5	I		127	HMD5	I/O	
8	CA6	I	Address bus of internal register	128	HMD6	I/O	
9	CA7	I		129	HMD7	I/O	
10	CA8	I		130	HMD8	I/O	Wave memory data bus (Upper 16 bits)
11	CA9	I		131	HMD9	I/O	
12	CA10	I		132	HMD10	I/O	
13	CA11	I		133	HMD11	I/O	
14	VSS		(Ground)	134	HMD12	I/O	
15	CD0	I/O		135	HMD13	I/O	
16	CD1	I/O		136	HMD14	I/O	
17	CD2	I/O		137	HMD15	I/O	
18	CD3	I/O		138	VSS		(Ground)
19	CD4	I/O		139	HMA0	O	
20	CD5	I/O		140	HMA1	O	
21	CD6	I/O		141	HMA2	O	
22	CD7	I/O		142	HMA3	O	
23	CD8	I/O		143	HMA4	O	
24	CD9	I/O	Data bus of internal register	144	HMA5	O	
25	CD10	I/O		145	HMA6	O	
26	CD11	I/O		146	HMA7	O	
27	CD12	I/O		147	HMA8	O	
28	CD13	I/O		148	HMA9	O	
29	CD14	I/O		149	HMA10	O	
30	VDD		(Power supply)	150	VDD		(Power supply)
31	VSS		(Ground)	151	VSS		(Ground)
32	CD15	I/O		152	HMA11	O	Wave memory address bus
33	CSN	I	Chip select	153	HMA12	O	
34	WRN	I	Write strobe	154	HMA13	O	
35	RDN	I	Read strobe	155	HMA14	O	
36	VDD		(Power supply)	156	HMA15	O	
37	SYSH0	O		157	HMA16	O	
38	SYSH1	O		158	HMA17	O	
39	SYSH2	O		159	HMA18	O	
40	SYSH3	O		160	HMA19	O	
41	SYSH4	O	NSYS/LNSYS upper 16 bits output	161	HMA20	O	
42	SYSH5	O		162	HMA21	O	
43	SYSH6	O		163	HMA22	O	
44	SYSH7	O		164	HMA23	O	
45	KONO0	O		165	HMA24	O	
46	KONO1	O		166	VSS		(Ground)
47	KONO2	O	Key on data	167	MRASN	O	RAS when DRAM(s) is connected to wave memory
48	KONO3	O		168	MCASN	O	CAS when DRAM(s) is connected to wave memory
49	VSS		(Ground)	169	MOEN	O	Wave memory output enable
50	SYSL0	I/O		170	MWEN	O	Wave memory write enable
51	SYSL1	I/O		171	VSS		(Ground)
52	SYSL2	I/O		172	LMD0	I/O	
53	SYSL3	I/O		173	LMD1	I/O	
54	SYSL4	I/O	NSYS input/LNSYS output lower 8 bits	174	LMD2	I/O	
55	SYSL5	I/O		175	LMD3	I/O	
56	SYSL6	I/O		176	LMD4	I/O	
57	SYSL7	I/O		177	LMD5	I/O	
58	KONI0	I		178	LMD6	I/O	
59	KONI1	I		179	LMD7	I/O	Wave memory data bus (Lower 16 bits)
60	VDD	I	(Power supply)	180	VDD		(Power supply)
61	VSS		Key on data input (Ground)	181	VSS		(Ground)
62	KONI2	I		182	LMD8	I/O	
63	KONI3	I		183	LMD9	I/O	
64	DAC0	O	DAC output	184	LMD10	I/O	
65	DAC1	O		185	LMD11	I/O	
66	WCLK	O	DAC0/DAC1 word clock	186	LMD12	I/O	
67	MELO0	O		187	LMD13	I/O	
68	MELO1	O		188	LMD14	I/O	
69	MELO2	O		189	LMD15	I/O	
70	MELO3	O		190	VSS		(Ground)
71	MELO4	O	MEL wave data output	191	LMA0	O	
72	MELO5	O		192	LMA1	O	
73	MELO6	O		193	LMA2	O	
74	MELO7	O		194	LMA3	O	
75	VDD		(Power supply)	195	LMA4	O	
76	ADLR	O	ADC word clock	196	LMA5	O	
77	MELI0	I		197	LMA6	O	
78	MELI1	I		198	LMA7	O	
79	MELI2	I		199	LMA8	O	
80	MELI3	I		200	LMA9	O	
81	MELI4	I	MEL wave data input	201	LMA10	O	
82	MELI5	I		202	LMA11	O	
83	MELI6	I		203	VSS		(Ground)
84	MELI7	I		204	LMA12	O	
85	VSS		(Ground)	205	LMA13	O	Wave memory address bus (Lower data memory)
86	RCASN	O	DRAM column address strobe (RAS signal)	206	LMA14	O	
87	RA8	O		207	LMA15	O	
88	RA7	O		208	LMA16	O	
89	RA6	O		209	LMA17	O	
90	VDD		(Power supply)	210	VDD		(Power supply)
91	VSS		(Ground)	211	VSS		(Ground)
92	RA5	O		212	LMA18	O	
93	RA4	O		213	LMA19	O	
94	RA3	O		214	LMA20	O	
95	RA2	O	DRAM address bus	215	LMA21	O	
96	RA1	O		216	LMA22	O	
97	RA0	O		217	LMA23	O	
98	RRASN	O	DRAM row address strobe (RAS signal)	218	LMA24	O	
99	RWEN	O	DARM write enable	219	VSS		(Ground)
100	VSS		(Ground)	220	SYO	O	Sync. signal for master clock
101	RD7	I/O		221	SYOD	O	Sync. signal for HCLK/QCLK
102	RD6	I/O		222	QCLK	O	1/12 master clock (64 Fs)
103	RD5	I/O		223	HCLK	O	1/6 master clock (128 Fs)
104	RD4	I/O		224	CK256	O	1/3 master clock (256 Fs)
105	RD3	I/O		225	SYSCLK	O	1/2 master clock (384 Fs)
106	RD2	I/O		226	VDD		(Power supply)
107	RD1	I/O		227	SYI	I	Sync. clock
108	RD0	I/O		228	MCLKI	I	Master clock input
109	VSS		(Ground)	229	MCLKO	O	Master clock output
110	RD17	I/O	DRAM data bus	230	VDD		(Power supply)
111	RD16	I/O		231	XIN	I	Crystal osc. input
112	RD15	I/O		232	XOUT	O	Crystal osc. output
113	RD14	I/O		233	VSS		(Ground)
114	RD13	I/O		234	ICN	I	Initial clear
115	RD12	I/O		235	CHIP2	I	2 chips mode enable
116	RD11	I/O		236	SLAVE	I	Master/Slave select when 2 chips mode
117	RD10	I/O		237	TESTON	I	
118	RD9	I/O		238	ACIN	I	Test pin
119	RD8	I/O		239	DCTEST	I	
120	VDD		(Power supply)	240	VDD		(Power supply)

● YSS236-F (XT013A00) VOP3

DM: IC004

PIN NO.	NAME	I/O	FUNCTION	PIN NO.	NAME	I/O	FUNCTION
1	VSS		Power supply	81	SO7	O	
2	WA17	O		82	SO6	O	Serial output
3	WA16	O		83	SO5	O	
4	WA15	O		84	VDD		Ground
5	WA14	O		85	VSS		Power supply
6	WA13	O	External memory address bus	86	SO4	O	
7	WA12	O		87	SO3	O	
8	WA11	O		88	SO2	O	Serial output
9	WA10			89	SO1	O	
10	VDD		Ground	90	SO0	O	
11	VSS		Power supply	91	WDCK	O	Data enable for DAC
12	WA09	O		92	SWPKON	O	SWP00 format key on output
13	WA08	O		93	IRQN	O	EG interrupt
14	WA07	O		94	VDD		Ground
15	WA06	O		95	VSS		Power supply
16	WA05	O	External memory address bus	96	XTAL_I	I	Quartz crystal terminal
17	WA04	O		97	XTAL_O	O	Quartz crystal terminal
18	WA03	O		98	MCLK	O	Oscillate clock output
19	WA02	O		99	VDD		Ground
20	VDD		Ground	100	VSS		Power supply
21	VSS		Power supply	101	MICN	I	Initial clear
22	WA01	O	External memory address bus	102	CLKIN	I	Master clock input
23	WA00	O		103	SYWIN	I	Sync.signal input
24	WEN	O	External memory control (WEN)	104	SYW	O	Sync.signal output
25	OEN	O	External memory control (OEN)	105	SYWD	O	Sync.signal output
26	RASN	O	External memory control (RASN)	106	VDD		Ground
27	CASN	O	External memory control (CASN)	107	VSS		Power supply
28	CEN	O	External memory control (CEN)	108	CLKO	O	For test (512 fs output)
29	VDD		Ground	109	WCLK	O	2 times sync.clock output (256 fs)
30	VSS		Power supply	110	HCLK	O	4 times sync.clock output (128 fs)
31	WD19	I/O		111	QCLK	O	8 times sync.clock output (64 fs)
32	WD18	I/O		112	TSTCI	I	PLL test input
33	WD17	I/O	External memory data bus	113	VDD		Ground
34	WD16	I/O		114	VSS		Power supply
35	WD15	I/O		115	(NC)		
36	WD14	I/O		116	VDD(PLL)		
37	VDD		Ground	117	CPO	O	PLL control output
38	VSS		Power supply	118	CPIN	I	PLL control input
39	WD13	I/O		119	REF	I	PLL control input
40	WD12	I/O		120	VSS(PLL)		
41	WD11	I/O		121	(NC)		
42	WD10	I/O	External memory data bus	122	VDD		Ground
43	WD09	I/O		123	VSS		Power supply
44	WD08	I/O		124	TSTCS	I	PLL test input
45	WD07	I/O		125	CA6	I	
46	VDD		Ground	126	CA5	I	CPU address bus
47	VSS		Power supply	127	CA4	I	
48	WD06	I/O		128	CA3	I	
49	WD05	I/O		129	CA2	I	
50	WD04	I/O		130	VDD		Ground
51	WD03	I/O	External memory data bus	131	VSS		Power supply
52	WD02	I/O		132	CA1	I	CPU address bus
53	WD01	I/O		133	CA0	I	Lo/Hi select in 8 bits write
54	WD00	I/O		134	CSN	I	Chip select
55	VDD		Ground	135	RDN	I	Register read
56	VSS		Power supply	136	WRN	I	Register write
57	TST2	O		137	BTYP		Data bus type select
58	TST1	O	Test output	138	VDD		Ground
59	TST0	O		139	VSS		Power supply
60	MS	I	Memory select	140	CD15	I/O	
61	LRCLK	O	LR clock for ADC	141	CD14	I/O	
62	SI7	I	Serial input	142	CD13	I/O	CPU data bus
63	SI6	I		143	CD12	I/O	
64	VDD		Ground	144	CD11	I/O	
65	VSS		Power supply	145	VDD		Ground
66	SI5	I		146	VSS		Power supply
67	SI4	I		147	CD10	I/O	
68	SI3	I	Serial input	148	CD09	I/O	
69	SI2	I		149	CD08	I/O	CPU data bus
70	SI1	I		150	CD07	I/O	
71	SI0	I		151	CD06	I/O	
72	DB1	I	Output bit type select for DAC	152	CD05	I/O	
73	DB0	I		153	VDD		Ground
74	VDD		Ground	154	VSS		Power supply
75	VSS		Power supply	155	CD04	I/O	
76	ODFM	I	Output mode select for DAC	156	CD03	I/O	
77	OFS3	I		157	CD02	I/O	CPU data bus
78	OFS2	I	Serial output format select	158	CD01	I/O	
79	OFS1	I		159	CD00	I/O	
80	OFS0	I		160	VDD		Ground

● **SED1335F0B** (XQ595A00) **LCDC** (LCD Controller)

DM: IC009

PIN NO.	NAME	I/O	FUNCTION	PIN NO.	NAME	I/O	FUNCTION
1	VA5	O	VRAM address bus	31	XD2	O	Data bus output for 4 bit dot
2	VA4	O		32	XD1	O	
3	VA3	O		33	XD0	O	
4	VA2	O		34	XECL	O	S driver enable, chain clock
5	VA1	O		35	XSCL	O	Data bus shift clock
6	VA0	O		36	Vss	-	Ground
7	/VWR	O	VRAM read/write	37	LP	O	X driver latch pulse
8	/VCE	O	Memory control	38	WF	O	Frame signal for X/Y driver
9	/VRD	-	Not used	39	YDIS	O	Power down signal for displaying off mode
10	/RES	I	Initial clear	40	YD	O	Scan start signal
11	NC	-	Not used	41	YSCL	O	Scan shift clock
12	NC	-	Not used	42	VD7	I/O	VRAM data bus
13	/RD	I	Read strobe	43	VD6	I/O	
14	/WR	I	Write strobe	44	VD5	I/O	
15	SEL2	I	Bus select	45	VD4	I/O	
16	SEL1	I	Bus select	46	VD3	I/O	
17	OSC1	I	Clock	47	VD2	I/O	
18	OSC2	O	Clock	48	VD1	I/O	
19	/CS	I	Chip select	49	VD0	I/O	
20	A0	I	Data mode select	50	VA15	O	VRAM address bus
21	Vdd	-	Power supply	51	VA14	O	
22	D0	I/O	Data bus	52	VA13	O	
23	D1	I/O		53	VA12	O	
24	D2	I/O		54	VA11	O	
25	D3	I/O		55	VA10	O	
26	D4	I/O		56	VA9	O	
27	D5	I/O		57	VA8	O	
28	D6	I/O		58	VA7	O	
29	D7	I/O		59	VA6	O	
30	XD3	O	Data bus output for 4 bit dot	60	NC	-	Not used

● **HD63266F** (XI939A00) **FDC** (Floppy Disk Controller)

DM: IC010

PIN NO.	NAME	I/O	FUNCTION	PIN NO.	NAME	I/O	FUNCTION
1	8"//5"	I	Data transmission speed	33	/TRKO	I	Track 00 signal
2	XTALSET	I	Clock select	34	/INDEX	I	Index signal
3	/RESET	I	Rest	35	/RDATA	I	Read data input from FDD
4	E//RD	I	Enable/Read	36	XTAL2		Clock
5	RW//WR	I	Read/write/Write	37	EXTAL2		
6	/CS	I	Chip select	38	NC		
7	/DACK	I	DMA acknowledge	39	XTAL1		Clock
8	RS0	I	Register select	40	EXTAL1		
9	RS1	I		41	VSS4		Ground
10	VSS1		Ground	42	VSS5		
11	VSS2			43	NC		
12	D0	I/O	Data bus	44	VCC2		Power supply
13	D1	I/O		45	VCC3		
14	D2	I/O		46	VCC4		
15	D3	I/O		47	/WGATE	O	Write control
16	D4	I/O		48	/WDATA	O	Writ data to FDD
17	D5	I/O		49	VSS6		Ground
18	D6	I/O		50	/STEP	O	Step signal to control head of FDD
19	D7	I/O		51	/HDIR	O	Direction
20	/DREQ	O	DMA request	52	/HLOAD	O	Head load
21	/IRQ	O	Interrupt request	53	/HSEL	O	Head select
22	/DEND	I	Data end	54	VSS7		Ground
23	VSS3		Ground	55	/DS0	O	Drive select
24	1/2 EX1			56	/DS1	O	
25	VCC1		Power supply	57	/DS2	O	
26	NUM1	I		58	/DS3	O	
27	NUM3	I		59	VSS8		Ground
28	IFS	I	Host interface select	60	/MON0	O	Motor on
29	SFORM	I	Format data	61	/MON1	O	
30	/INP	I	Index pulse	62	/MON2	O	
31	/READY	I	Ready from FDD	63	/MON3	O	
32	/WPRT	I	Write control signal	64	VSS9		Ground

● **MSM82C51A-2GS-KR1** (XV513A00)
USART (Universai Synchronous Asynchronous receiver Transmitter)

DM: IC015

PIN NO.	NAME	I/O	FUNCTION	PIN NO.	NAME	I/O	FUNCTION
1	D2	I/O	Data Bus	17	TXRDY	O	Character data
2	D3	I/O	Data Bus	18	SYNDET/BD	I/O	Character data
3	RXD	I	Serial Data	19	/CTS	I	Input terminal for modem interface
4	NC			20	NC		
5	GND		Ground	21	TXEMPTY	O	Character data
6	D4	I/O	Data Bus	22	TXD	O	Character data
7	D5	I/O	Data Bus	23	CLK	I	Clock
8	D6	I/O	Data Bus	24	RESET	I	Reset
9	D7	I/O	Data Bus	25	/DSR	I	Input port for modem interface
10	/TXC	I	Clock	26	/RTS	O	Output port for modem interface
11	/WR	I	Write signal	27	/DTR	O	Output port for modem interface
12	/CS	I	Device select	28	/RXC	I	Clock
13	NC			29	NC		
14	C//D	I	Access select signal	30	VCC	I	Power supply
15	/RD	I	Read signal	31	D0	I/O	Data Bus
16	RXRDY	O	Character data	32	D1	I/O	Data Bus

● **AK5351-VF-E2** (XV510A00) **ADC** (Analog to Digital Converter)

DM: IC016

PIN NO.	NAME	I/O	FUNCTION	PIN NO.	NAME	I/O	FUNCTION
1	AINR+	I	Analog signal input (R channel +)	13	DGND	-	Digital ground
2	AINR-	I	Analog signal input (R channel -)	14	TST4	I/O	Test mode setting 4
3	VREF	O	Reference voltage	15	AMODE2		Interface clock select 2
4	VA	-	Analog power supply	16	/PD	I	Power-down mode
5	AGND	-	Analog ground	17	MCLK	I	Master clock input
6	AINL+	I	Analog signal input (L channel +)	18	SCLK	I/O	Serial data clock
7	AINL-	I	Analog signal input (L channel -)	19	LRCK	I	Input/Output channel clock
8	TST1	I/O	Test mode setting 1	20	FSYNC	I/O	Frame synch. clock
9	HPFE		HPF on/off	21	SDATA	O	Serial data output
10	TST2	I/O	Test mode setting 2	22	CMODE	I	Master clock select
11	TST3	I/O	Test mode setting 3	23	SMODE1	I	Interface clock select 1
12	VD	-	Digital power supply	24	VB	-	Digital power supply

● **PCM1702U/2K** (XP551A00) **DAC** (Digital to Analog Converter)

DM: IC017, 018

PIN NO.	NAME	I/O	FUNCTION	PIN NO.	NAME	I/O	FUNCTION
1	DATA	I	Data input	11	+VCC		Power supply (+5 V)
2	CLK	I	Clock	12	BPO		Bipolar de-couple
3	NC			13	NC		
4	+VDD		Power supply (+5 V)	14	IOUT	O	Output current
5	D.GND		Digital ground	15	A.GND		Analog ground
6	-VDD		Power supply (-5 V)	16	A.GND		Analog ground
7	L.E	I	Latch enable	17	SERV		Servo de-couple
8	NC			18	NC		
9	NC			19	REF		Reference de-couple
10	NC			20	-VCC		Power supply (-5 V)

● **1414-AAPI** (XV481B00) **Gate Array** (Video Out)

DM: IC020

PIN NO.	NAME	I/O	FUNCTION	PIN NO.	NAME	I/O	FUNCTION
1	RESET	I	Reset (High/Low)	33	RD	O	Read strobe (High/Low)
2	TEST	I	Test mode setting (High/Low)	34	WR	O	Write strobe (High/Low)
3	MODE	I	Mode select (High/Low)	35	GND	-	Ground (Out buffer)
4	NTSC/PAL	I	NTSC/PAL signal input (High/Low)	36	A0	O	
5	YD	I	Frame	37	A1	O	
6	LP	I	Line latch pulse	38	A2	O	
7	5V	-	Power supply (5 v)	39	A3	O	
8	XSCL	I	4 Dot latch clock	40	A4	O	
9	GND	-	Ground (In buffer)	41	A5	O	
10	XD0	I		42	A6	O	Address bus
11	XD1	I	Dot data	43	A7	O	
12	XD2	I		44	A8	O	
13	XD3	I		45	A9	O	
14	GND	-	Ground	46	A10	O	
15	5V	-	Power supply (In buffer 5 V)	47	A11	O	
16	5V	-	Power supply (Out buffer 5 V)	48	A12	O	
17	LCD_CLK	O	LCD clock output (9 MHz)	49	5V	-	Ground (Out buffer 5 V)
18	GND	-	Ground (Out buffer)	50	A13	O	
19	XA0	I	OSC_NTSC signal input	51	A14	O	Address bus
20	XA1	O	OSC_NTSC signal output	52	A15	O	
21	XB0	I	OSC_PAL signal input	53	A16	O	
22	XB1	O	OSC_PAL signal output	54	SYNCOUT	O	Sync. signal output
23	GND	-	Ground (In buffer)	55	GND	-	Ground (Out buffer)
24	D0	I/O		56	SC_NTSC	O	SC_NTSC signal output
25	D1	I/O		57	SC_PAL	O	SC_PAL signal output
26	D2	I/O		58	GND	-	Ground (Out buffer)
27	D3	I/O	Data bus	59	BOUT1	O	
28	D4	I/O		60	BOUT0	O	
29	D5	I/O		61	GOUT1	O	Color data
30	D6	I/O		62	GOUT0	O	
31	D7	I/O		63	ROUT1	O	
32	GND	-	Ground	64	ROUT0	O	

● **YMZ702-D** (XR632A00) **KSN2** (Key Scanner)

AEXL88L: IC1

PIN NO.	NAME	I/O	FUNCTION	PIN NO.	NAME	I/O	FUNCTION
1	BK5	O		21	GND		Ground
2	BK4	O		22	VDD		Power supply
3	BK3	O	Key block (open drein)	23	SO	O	Serial data
4	BK2	O		24	ACK	I	Acknowledge/mode select
5	BK1	O		25	XCK	I	Clock for serial data
6	BK0	O		26	/IC	I	Initial clear
7	MK15	I		27	TST1	I	Test mode
8	MK14	I		28	TST2	I	(L,L: normal mode, others: test)
9	MK13	I	First make contact	29	XCKINH	I	Inhibit of serial clock
10	MK12	I		30	BK14	O	
11	MK11	I		31	BK13	O	
12	MK10	I		32	BK12	O	
13	MK05	I		33	BK11	O	
14	MK04	I		34	BK10	O	
15	MK03	I	Second make contact	35	BK9	O	Key block (open drein)
16	MK02	I		36	BK8	O	
17	MK01	I		37	BK7	O	
18	MK00	I		38	BK6	O	
19	XIN	I	Crystal osc. input (4 MHz)	39	GND		Ground
20	XOUT	O	Crystal osc. output (4 MHz)	40	VDD		Power supply

● **MN101C027YB** (XS711200) **CPU**

PNL: IC001

PIN NO.	NAME	I/O	FUNCTION	PIN NO.	NAME	I/O	FUNCTION
1	S1	I	Switch matrix data	33	S12	I	Switch matrix data
2	S2	I		34	S13	I	
3	S3	I		35	S14	I	
4	S4	I		36	TXD	O	MIDI transmit data
5	S5	I		37	S15	I	Switch matrix data
6	VREF+	-	Power supply (+5V, analog)	38	S16	I	
7	VDD	-	Power supply (+5V)	39	S17	I	
8	OSC2	O	Crystal oscillator (8MHz)	40	S18	I	
9	OSC1	I	Crystal oscillator (8MHz)	41	L16	O	LED drive data
10	VSS	-	Ground	42	L17	O	
11	XI	I	Not used	43	L18	O	
12	XO	O	Not used	44	L19	O	
13	MMOD	I	Memory mode select (Grounded)	45	L8	O	
14	RD0	O	Rotary encoder data	46	L9	O	
15	RXD	I	MIDI receive data	47	L10	O	
16	D0	O	LED and switch drive data	48	L11	O	
17	D1	O		49	L12	O	
18	D2	O		50	L13	O	
19	D3	O		51	L14	O	
20	D4	O		52	L15	O	
21	/RST	I	Reset	53	L7	O	LED and switch drive data
22	D5	O	LED and switch drive data	54	L6	O	
23	D6	O		55	L5	O	
24	D7	O		56	L4	O	
25	D8	O		57	L3	O	
26	D9	O		58	L2	O	
27	S6	I	Switch matrix data	59	L1	O	
28	S7	I		60	L0	O	
29	S8	I		61	VREF	-	Grounded
30	S9	I		62	AD0	I	Analog input
31	S10	I		63	AD1	I	Analog input
32	S11	I		64	S0	I	Switch matrix data

■ IC BLOCK DIAGRAM

● **TC74HCU04AF-TP1** (XD660A00)
SN74HCU04N (IG142250)
Hex Inverter
DM: IC 032
JACK1: IC05

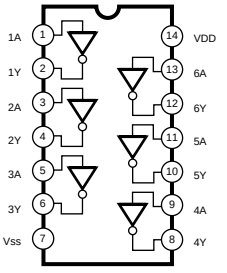

● **HD74AC32FPEL** (XK452A00)
Quad 2 Input OR
DM: IC 031

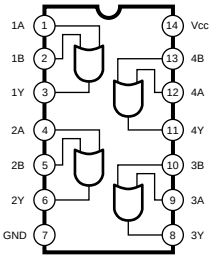

● **TC74HC74AF** (XP003A00)
Dual D-Type Flip-Flop
DM: IC 033

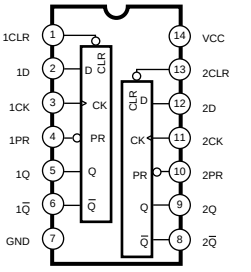

INPUTS				OUTPUTS	
PR	CLR	CLK	D	Q	Q
L	H	X	X	H	L
H	L	X	X	L	H
L	L	X	X	H	H
H	H	f	H	H	L
H	H	f	L	L	H
H	H	L	X	Q₀	Q₀

● **SN74HC132NS-R** (XL112A00)
SN74HC132NS-R (XW792A00)
Quad 2 Input NAND
DM: IC 035

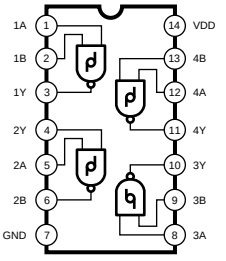

● **SN74HC138NSR** (XD835A00)
SN74HC138NSR (XW793A00)
3 to 8 Demultiplexer
DM: IC 029, 030

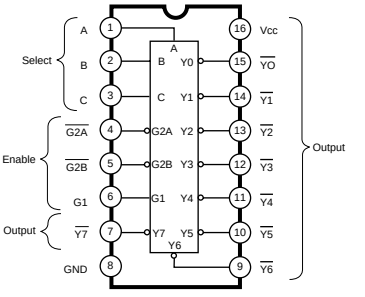

● **SN75C1168N** (XU463A00)
Line Driver/Receiver
JACK1: IC 07

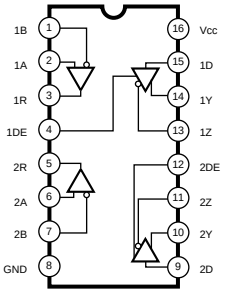

● **HD14069UBFP** (XU369A00)
Hex Inverter
DM: IC 034

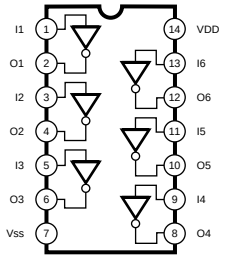

● **M5227FP** (XT773A00)
5-Band Graphic Equalizer
EQ-JACK: IC160, 180

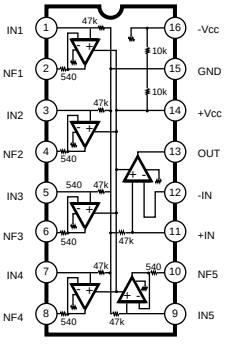

● **µPC4574G2** (XE518A00)
Quad Operational Amplifier
EQ-JACK: IC 100

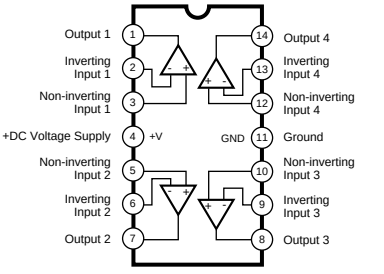

● **µPC4570G2** (XF291A00)
Dual Operational Amplifier
DM: IC 041, 042
MIC: IC 100

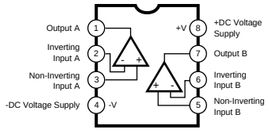

● **LA6517M-TE-R** (XT131A00)
Dual Low Voltage Power Amplifier
EQ-JACK: IC 140

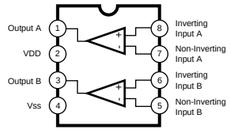

● **LB1443N** (XF483A00)
LED Driver
DM: IC 040

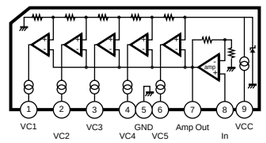

● **CXA1645M-T6** (XN431A00)
RGB Encorder
DM: IC 019

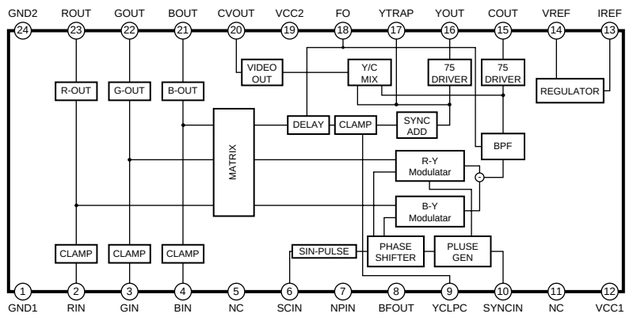

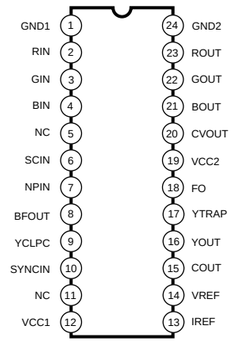

■ CIRCUIT BOARDS

DM Circuit Board (XV562C0) ····· 24
ENC Circuit Board (XV483A0) ····· 28
EQ-JACK Circuit Board (XV484C0) ····· 29
FU120L Circuit Board (XS882A0) ····· 29
HP Circuit Board (XQ795A0) ····· 24
INV Circuit Board (XT112A0) ····· 27
JACK1 Circuit Board (XR598E0) ····· 25
MA120 Circuit Board (XQ122A0) ····· 28
MIC Circuit Board (XV507C0) ····· 25
MV Circuit Board (XV483A0) ····· 28
NETWORK Circuit Board (XV011A0) ····· 28
NW1 Circuit Board (XT123B0) ····· 29
PEDAL Circuit Board (XR780B0) ····· 24
PEDAL-VR Circuit Board (XR780B0) ····· 24
PL Circuit Board (XR898A0) ····· 24
PNGC Circuit Board (XS977A0) ····· 26
PNGL Circuit Board (XV483A0) ····· 27
PNGR Circuit Board (XV483A0) ····· 27
PNL Circuit Board (XV482A0) ····· 26
PNR Circuit Board (XV483A0) ····· 28

Note: See parts list for details of circuit board component parts.

● DM Circuit Board

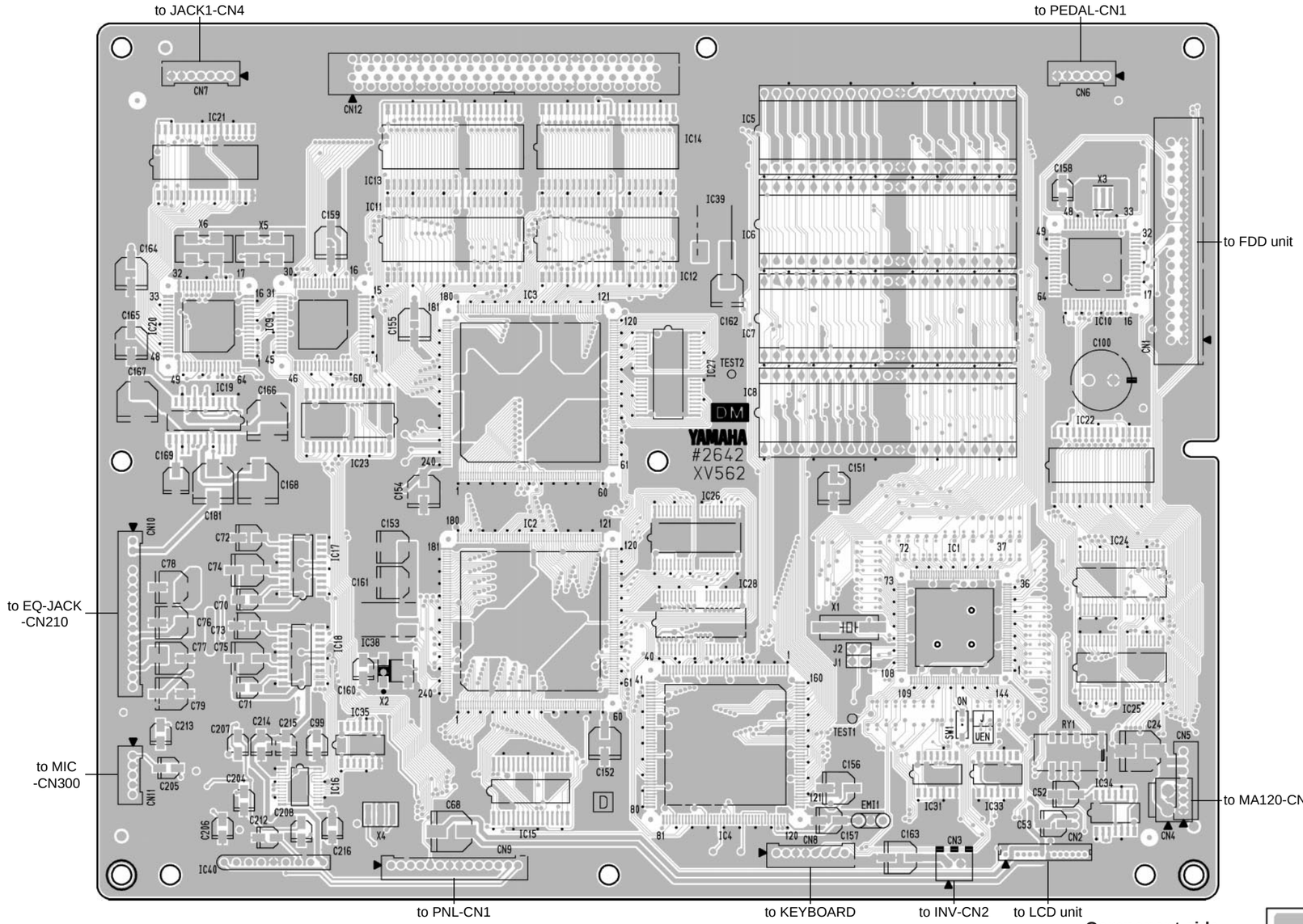

Component side

● HP Circuit Board

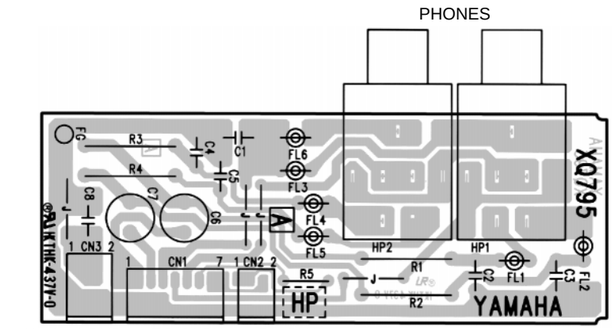

Component side

● PL Circuit Board

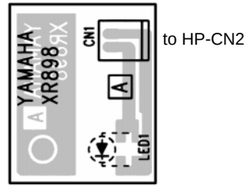

Component side

● PEDAL Circuit Board

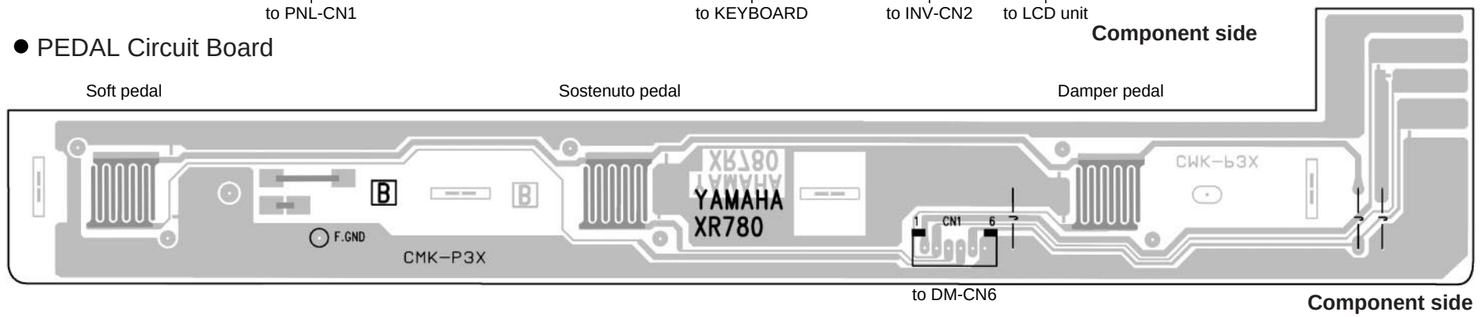

Component side

● PEDAL-VR Circuit Board

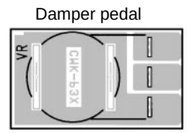

Component side

DM: 2NA-V309840⚠
HP: 2NA-VT47830
PL: 2NA-VN63740
PEDAL, VR: 2NA-VU69120⚠

● DM Circuit Board

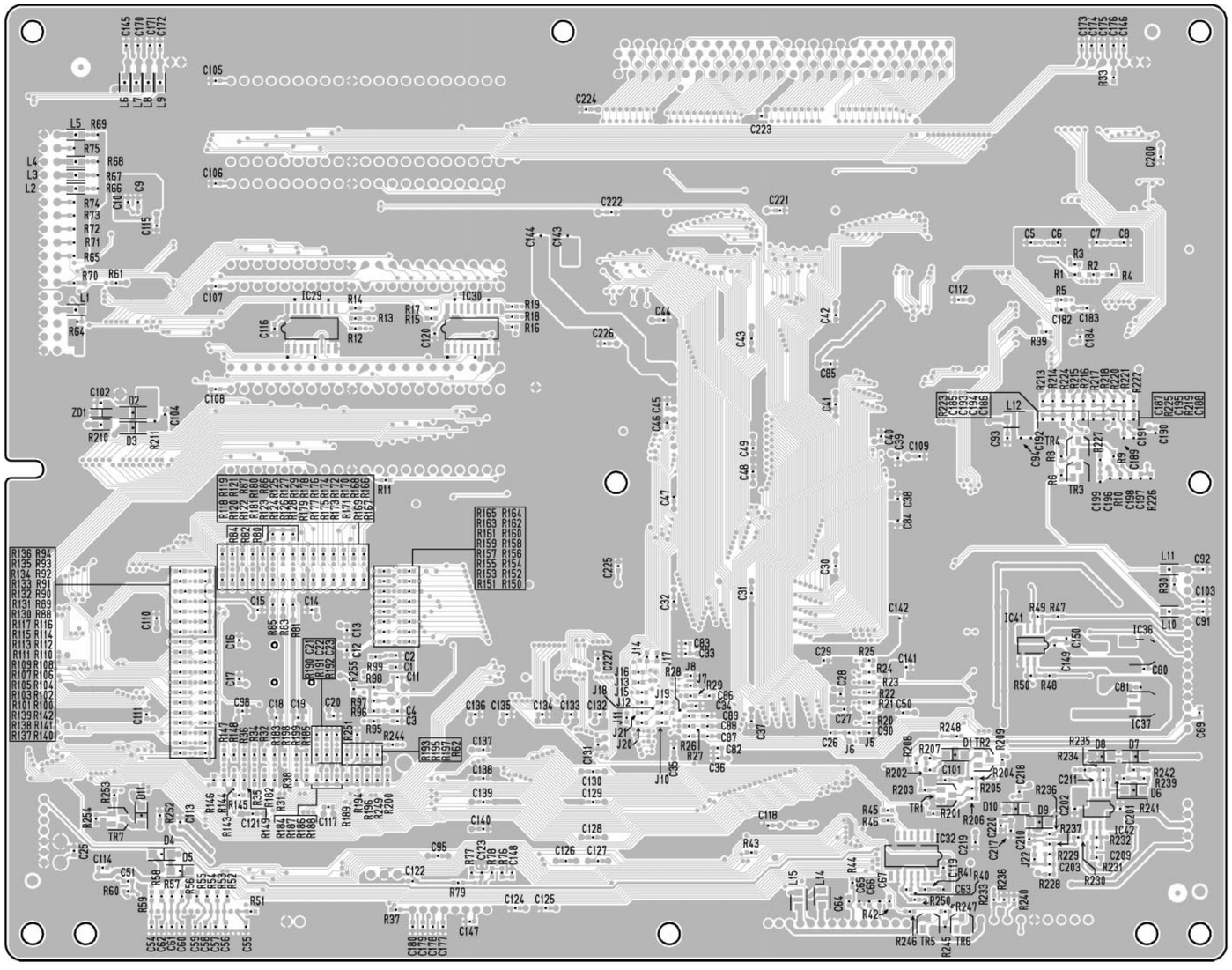

Pattern side

● JACK1 Circuit Board

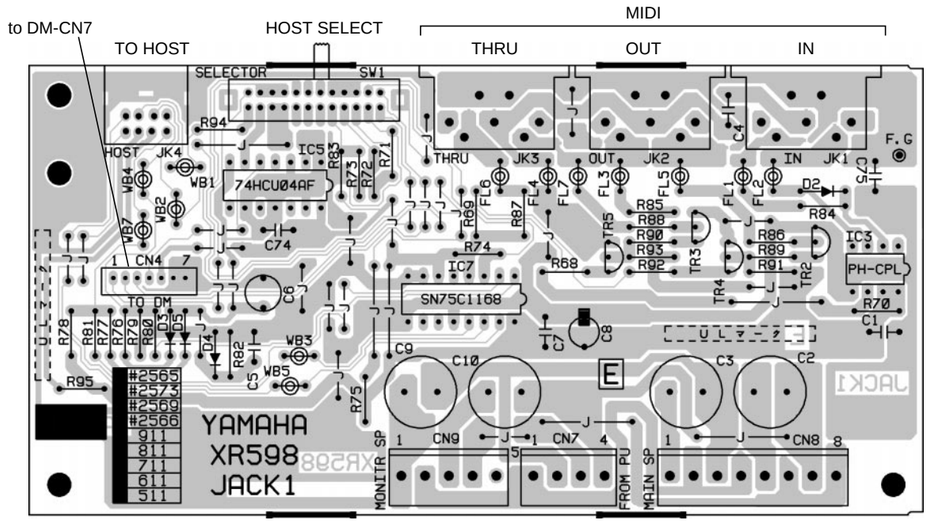

Component side

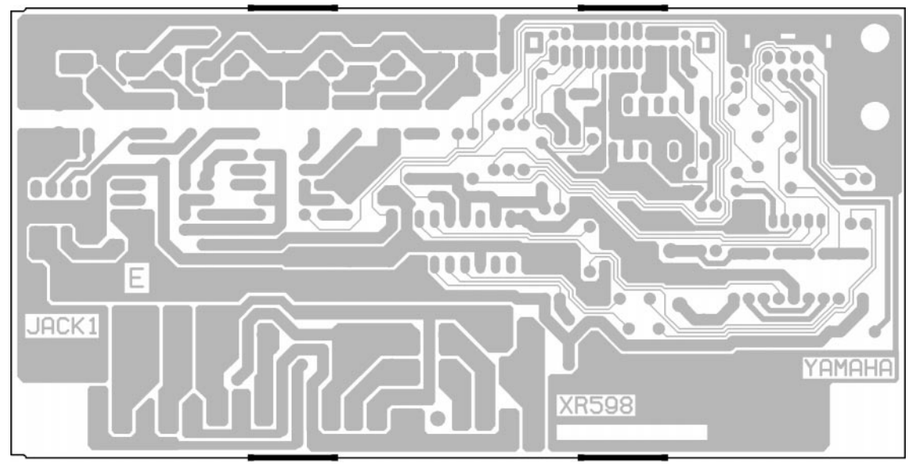

Pattern side

● MIC Circuit Board

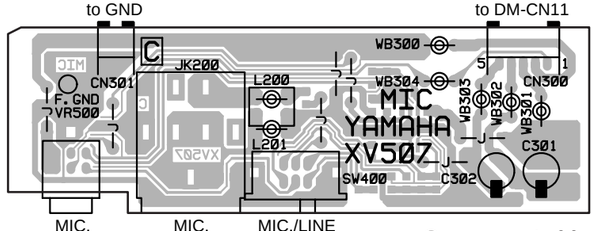

Component side

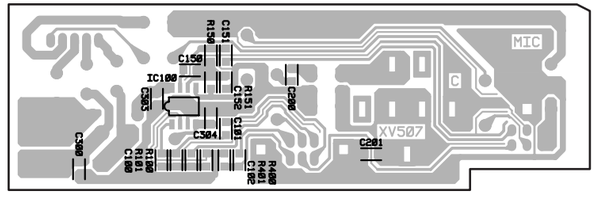

Pattern side

DM: 2NA-V309840⚠
JACK1: 2NA-VU2677⚠
MIC: 2NA-V313580⚠

● PNL Circuit Board

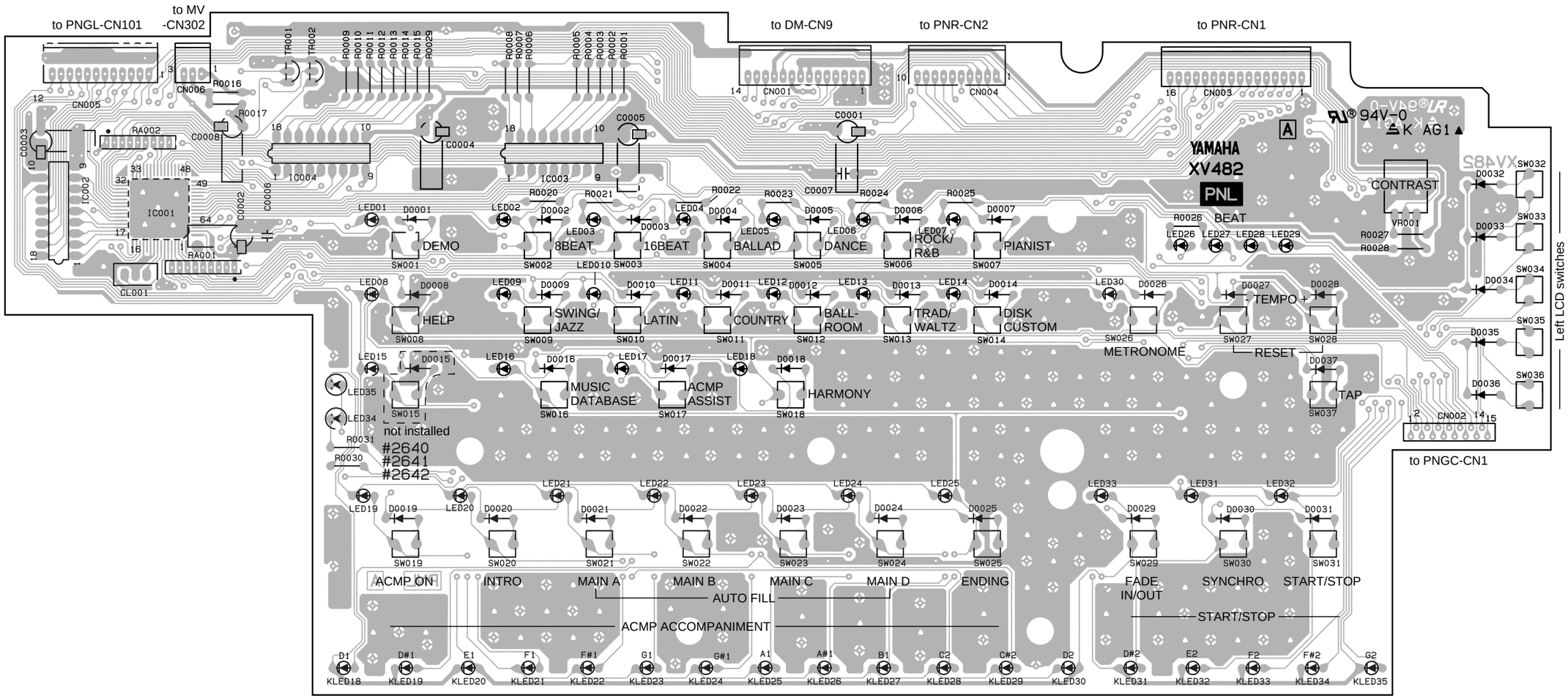

● PNGC Circuit Board

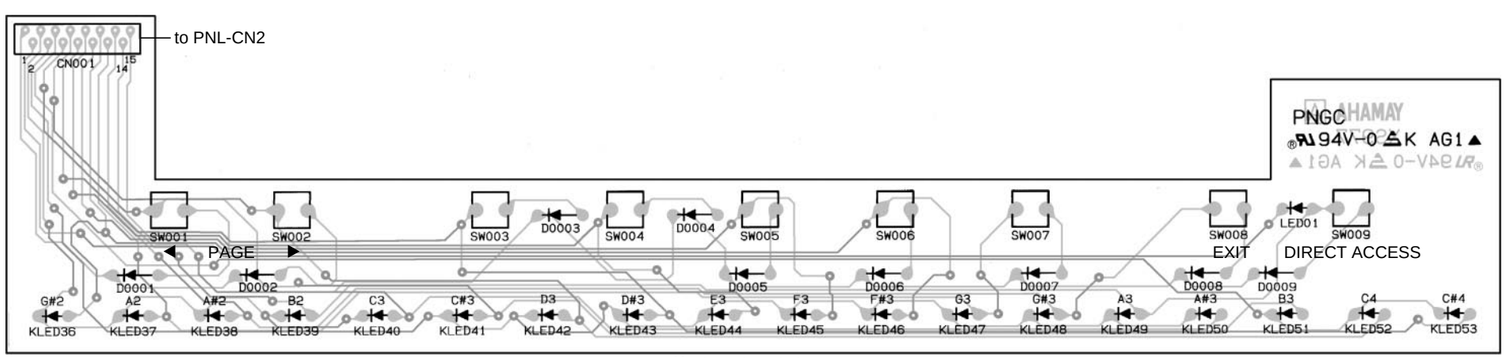

PNL: 2NA-X314960
PNGC: 2NA-VV88000

● PNL Circuit Board

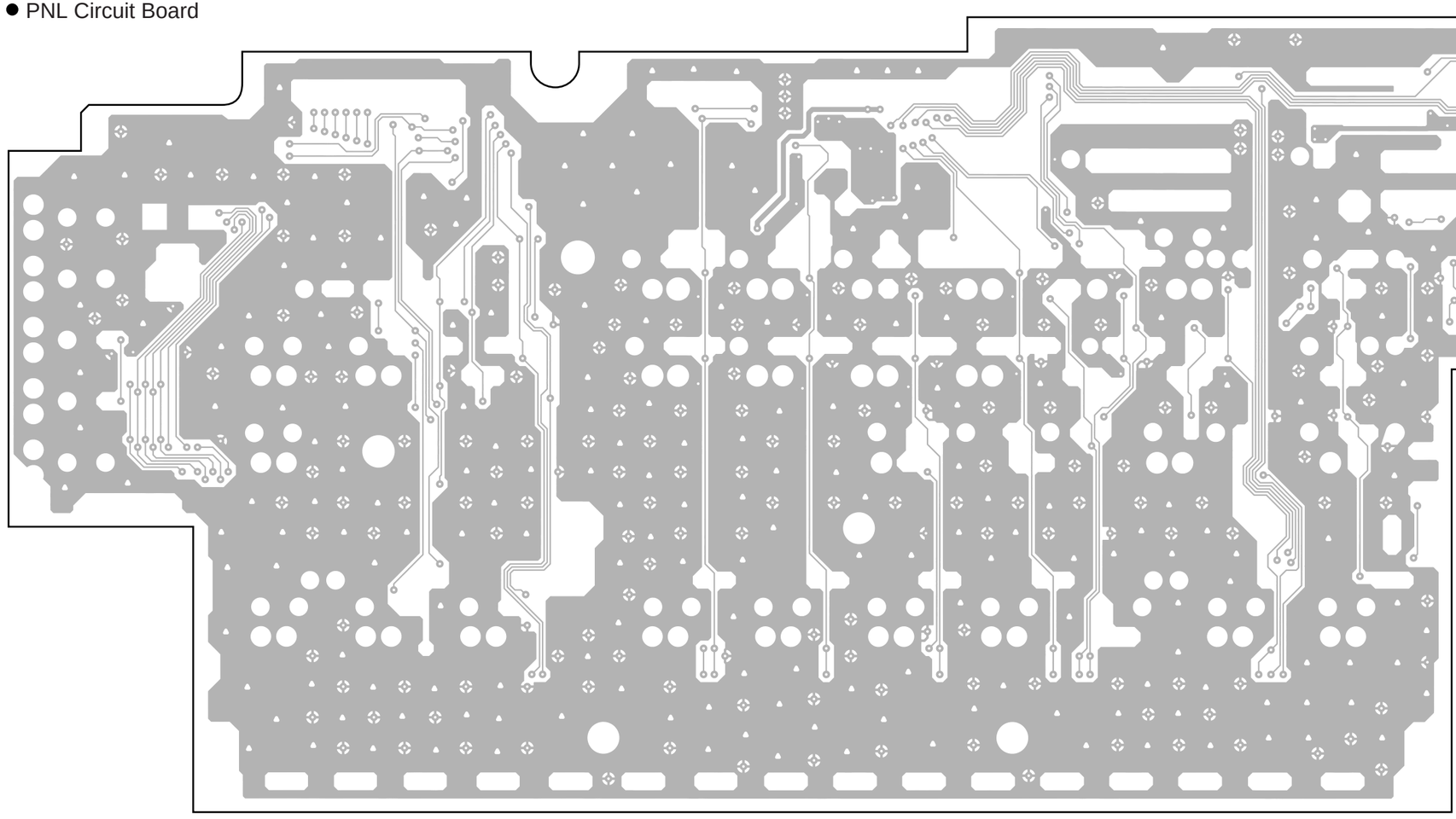

Pattern side

● INV Circuit Board

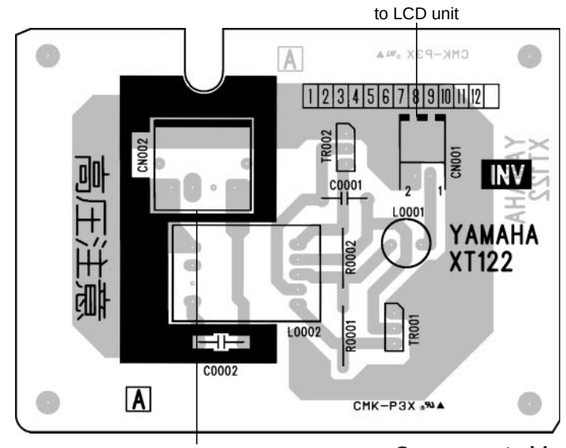

Component side

● PNGL Circuit Board

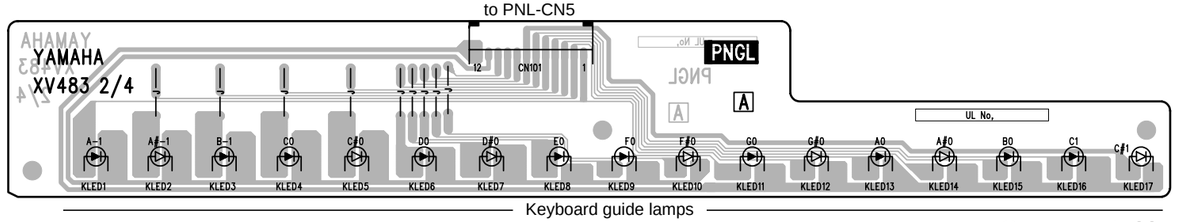

Keyboard guide lamps

Component side

● PNGR Circuit Board

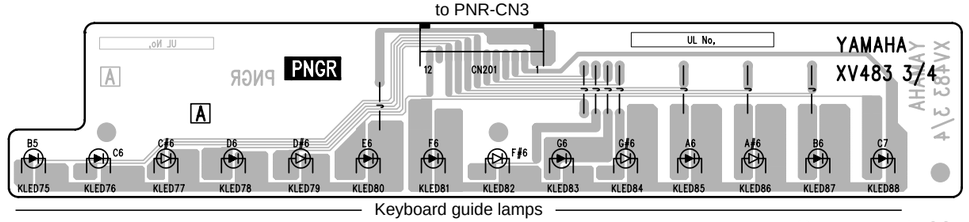

Keyboard guide lamps

Component side

PNL: 2NA-X314960
PNGL, PNGR: 2NA-V313470⚠
INV: 2NA-VY63880

● PNR Circuit Board

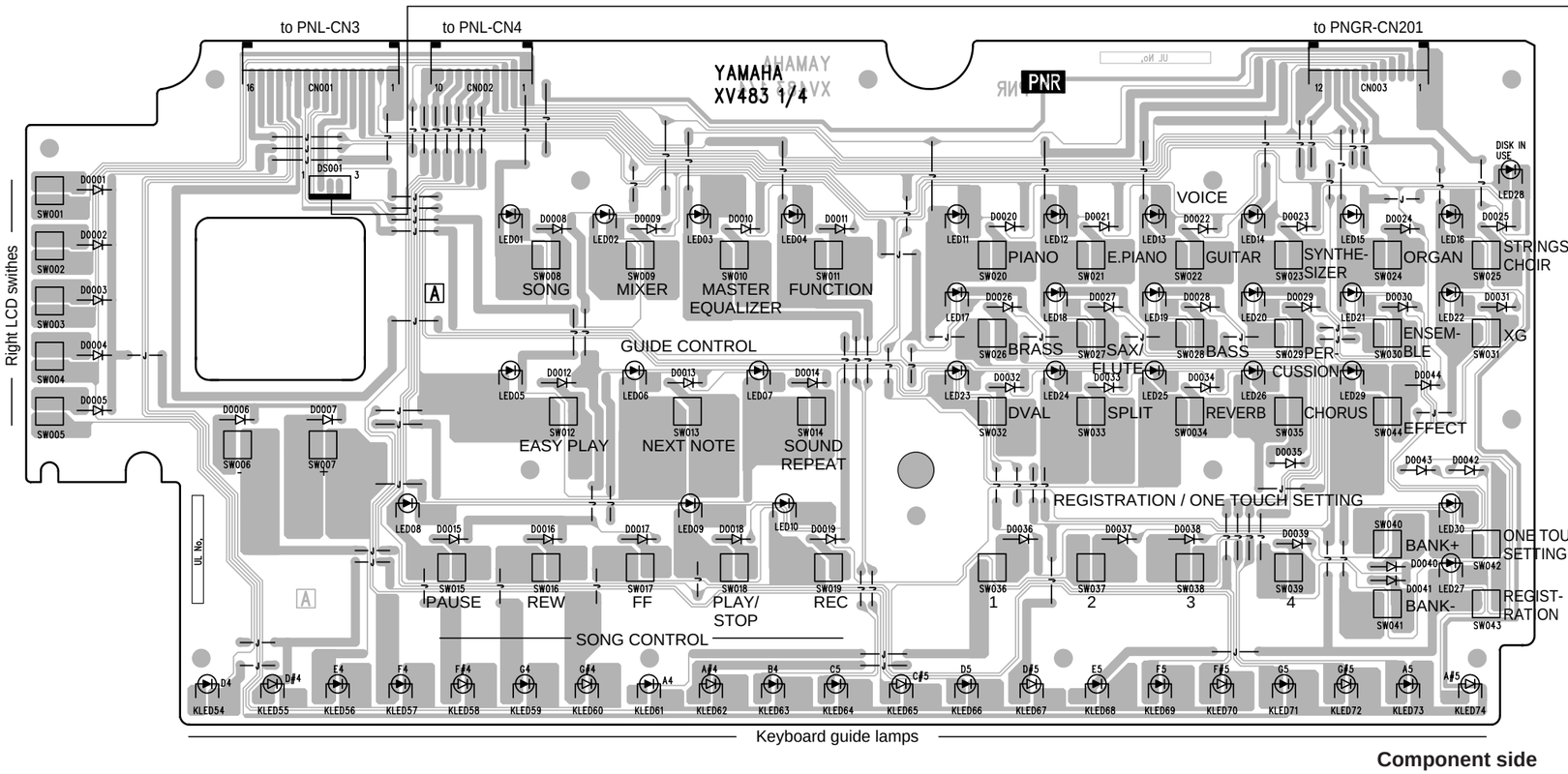

Component side

● ENC Circuit Board

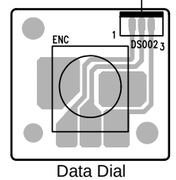

Component side

● MV Circuit Board

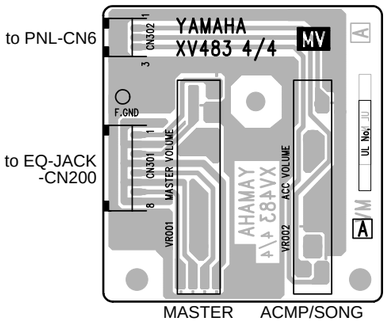

Component side

● NETWORK Circuit Board

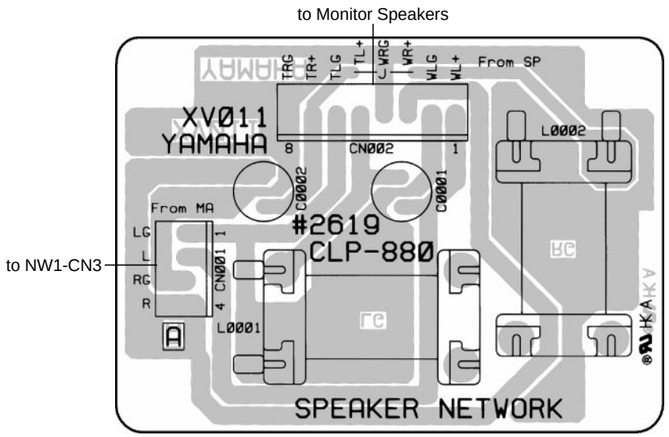

Component side

● MA120 Circuit Board

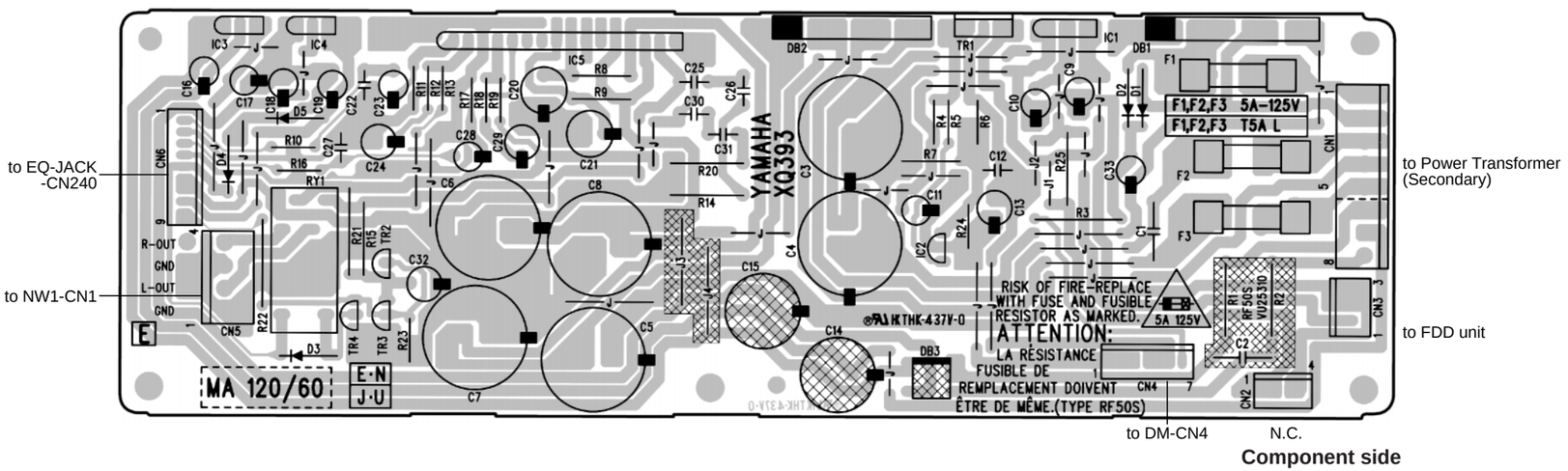

Component side

PNR(ENC), MV: 2NA-V313470⚠
MA120: 2NA-VT14410
NETWORK: 2NA-VY64290⚠

● EQ-JACKCircuit Board

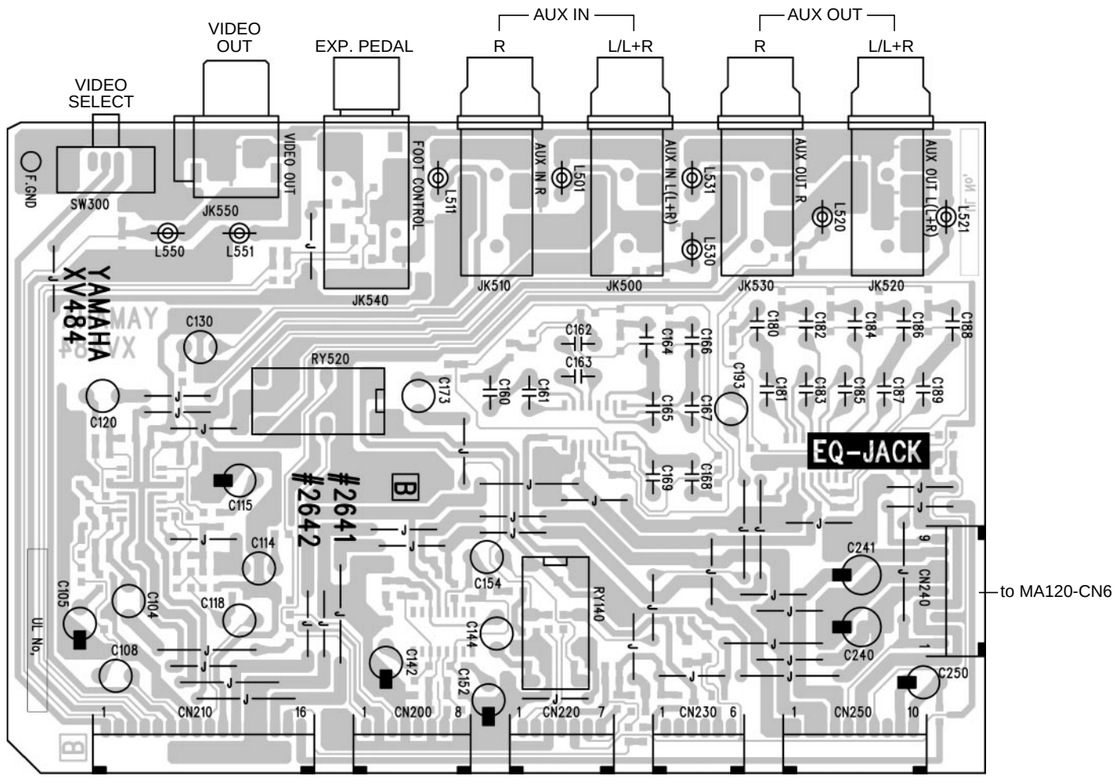

Component side

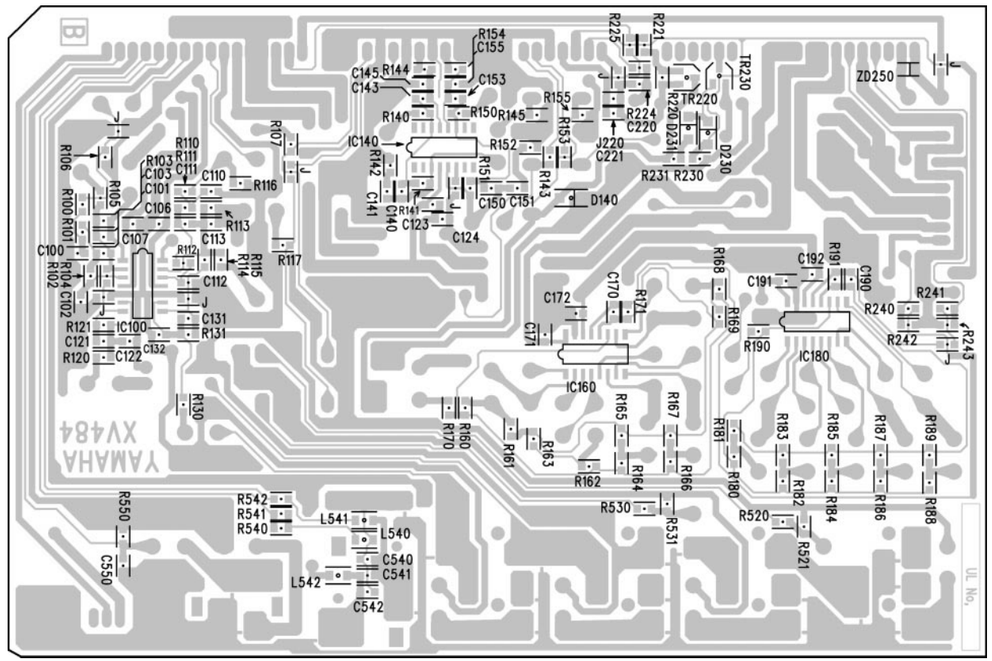

Pattern side

● NW1 Circuit Board

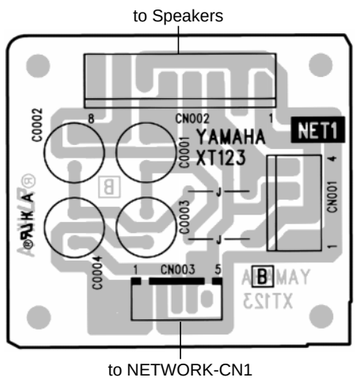

Component side

● FU120L Circuit Board

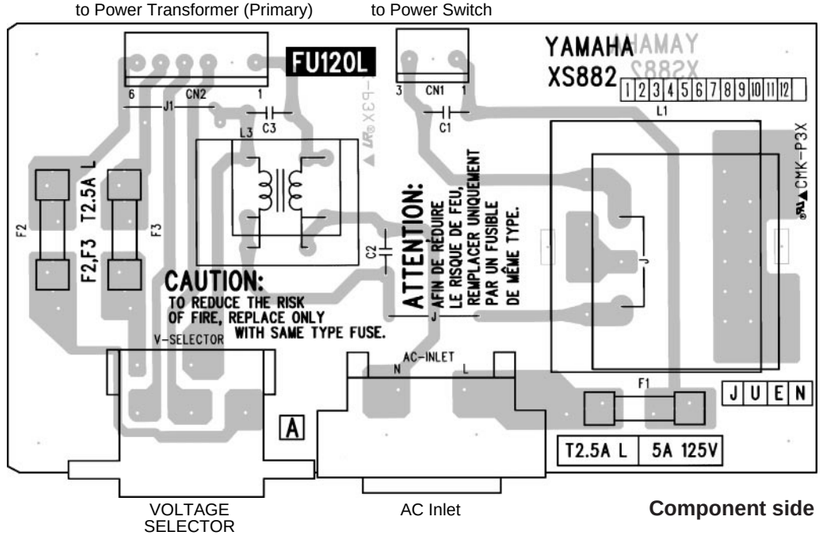

Component side

EQ-JACK: 2NA-V313600⚠
NW1: 2NA-V325580⚠
FU120L: 2NA-VV65070⚠

■ TEST PROGRAM

1. Preparation

To check the unit using the test program, the following measuring instruments and jigs are required:

Level meter (IHF-C curve)
Frequency counter
Note: Impedance must be 1 MΩ or above.
Use stereo plugs, and connect a 33 Ω load at the [PHONES] terminal.
Floppy disks (2HD and 2DD)
Foot controller (FC-7)

Unit settings:

MASTER VOLUME:	Maximum
Tone:	PIANO
Pedal:	OFF
Reverb:	OFF
Terminals:	Not connected if not specified

2. How to enter the Test Program

While pressing the [C2#], [F2] and [G2#] keys, turn on the power switch.

3. Proceeding through the Test Program

Once inside the test program, the LCD will display “TEST MODE”.
To select the program number, use the [Tempo +] and the [Tempo -] buttons.
To start the test, press the [Start/Stop] button.
When the test result is ok, the LCD will display “OK”.
When the test result is no good, press the [DEMO] button to select the next program number. When the test result of the “MIDI CHECK” or “TO HOST CHECK” is no good, turn off the power switch and re-enter the test program.

Test Items

No.	LCD for Each Test	Test Functions and Judgment Criteria
1	001 : Version	Displays ROM version (MAIN, WAVE, SCAN, STYLE, PARAM).
2	002 : ROM Check1	Checks the Program ROM and Data ROM
3	003 : RAM Check1	Checks all RAMs that are connected to the CPU
4	004 : Wave ROM Check1	Checks the Wave ROM
7	007 : FDD Check	Insert the floppy disks one by one (2DD and 2HD). Checks the floppy disk drive unit
9	009 : Effect1 RAM Check	Checks the Reverb effect RAM Check that the C3 note is output and that there is no noise.
10	010 : Effect2 RAM Check	Checks VOP3 effect RAM. Check that the C3 note is output and there is no noise.
11	011 : TG1 Check	Produces the sine wave sequence by changing the channels (1ch – 64ch) in order from A0 to C6. The guide lamps will light according to the sound. When a voice switch is pressed, the tone of the voice will sound. After autoscaling is finished, individual keys can be played. (If playing two or more keys simultaneously, the key pressed first has priority to make a sound.)
13	013 : Pitch Check	Connect the frequency counter to the PHONES jacks. Check the output level (440 Hz).
14	014 : Output R	Check the output level (1 kHz). AUX OUT L: Less than -35 dBm (-12 dBm +/-2 dB) AUX OUT R: -7 dBm +/-2 dB When the stereo plug is connected, check that the following output levels are shown: PHONES L: Less than -35 dBm PHONES R: -16 dBm +/-2 dB
15	015 : Output L	Check the output level (1 kHz). AUX OUT L: -7 dBm +/-2 dB AUX OUT R: Less than -35 dBm When the stereo plug is connected, check that the following output levels are shown: PHONES L: -16 dBm +/-2 dB PHONES R: Less than -35 dBm
16	016 : EQ Low	For factory test use only (outputs the C1 sine wave tone)
17	017 : EQ Mid	For factory test use only (outputs the C4 sine wave tone)
18	018 : EQ High	For factory test use only (outputs the C7 sine wave tone)
19	019 : D/A Noise	Checks D/A converter noise level. Play a note to check that there is no noise during the PIANO 1 release time. (The damper pedal should be ON.)
20	020 : SW, LED Check	Check the switches and the LEDs on the panel. Press the switch that is displayed on the LCD. A pre-assigned note is output when the switch is pressed. (With some switches, the corresponding LED will light up.) Also check the dial by turning it; the LCD should display “OK”. The LCD will display the numbers from 50 – 100 when turning the dial clockwise from the center and from 50 – 0 when turning the dial counter-clockwise from the center.
21	021 : All Panel LED On	Check that all panel LEDs are lit.
22	022 : All Red Panel LED On	Check that all red panel LEDs are lit.
23	023 : All Green Panel LED On	Check that all green panel LEDs are lit.
25	025 : All Key LED On	Check that all keyboard guide LEDs are lit.
26	026 : All RED Key LED On	Check that all red keyboard LEDs are lit.
27	027 : All Green Key LED On	Check that all green keyboard LEDs are lit.
28	028 : All LCD Dot On	Check that all LCD dots are ON. The LCD becomes blue.
29	029 : All LCD Dot Off	Check that all LCD dots are OFF. The LCD becomes white.
31	031 : Soft Pedal Check	Check that the C3 note sounds when pushing the pedal and that the C4 sounds when releasing the pedal; the LCD should display “OK”.
32	032 : Soste, Pedal Check	Check that the C3 note sounds when pushing the pedal and that the C4 sounds when releasing the pedal; the LCD should display “OK”.
33	033 : Damper Pedal Check	Check that the C3 note sounds when pushing the pedal and that the C4 sounds when releasing the pedal; the LCD should display “OK”.
34	034 : ABC Volume Check	Check that C3 note is output and the LCD displays 0 at minimum position and C4 note is output and the LCD displays 127 at maximum position when sliding the [ACMP/SONG VOLUME] knob, and the LCD displays OK.
35	035 : EXP Pedal Check	Connect the foot controller FC7 to EXP.PEDAL terminal. Check that C3 note is output and the LCD displays 0 at minimum position and C4 note is output and the LCD displays 127 at maximum position, and the LCD displays OK.
37	037 : MIDI Check	After connecting the MIDI IN and MIDI OUT, execute the test. Check that the C4 note sounds; the LCD should display “OK”.
38	038 : To Host Check	Connect pin 3 to pin 5 and pin 6 to pin 8 of the TO HOST terminal, and execute the test. Check that the following notes sound when changing the HOST SELECT switch position according to the LCD indication; the LCD should display “OK”. Mac position: note C5; PC1 position: note C4; PC2 position: note C3
39	039 : MIC Check	Check there is no noise
41	041 : ROM Check2	Checks the Program ROM and Data ROM
42	042 : RAM Check2	Checks all RAMs that are connected to CPU
43	043 : Wave ROM Check2	Checks the Wave ROM
46	046 : Back Up Check2	For factory test use only
47	047 : Factory Set	All RAMs are initialized and reset to the factory preset data when executing this test.
48	048 : Test Mode Exit	Exit from the test program when executing this test.
49	049 : RED	This model outputs “RED” to the VIDEO OUT in red according to NTSC/PAL selection swith.
50	050 : GREEN	This model outputs “GREEN” to the VIDEO OUT in green according to NTSC/PAL selection swith.
51	051 : BLUE	This model outputs “BLUE” to the VIDEO OUT in blue according to NTSC/PAL selection swith.

Note: 0 dBm =0.775 V

INSPECTIONS

1. AUX OUT and PHONES

1-1 Apply a 1 kHz, -20 dBm sine wave to the AUX IN L/L+R. Confirm that the output meets the following specifications:

AUX OUT L/L+R:	-7 dBm	PHONES L:	-12 dBm
AUX OUT R:	Less than -50 dBm	PHONES R:	Less than -40 dBm

1-2 Apply a 1 kHz, -20 dBm sine wave to the AUX IN R. Confirm that the output meets the following specifications:

AUX OUT L/L+R:	Less than -50 dBm	PHONES L:	Less than -40 dBm
AUX OUT R:	-10 dBm	PHONES R:	-14 dBm

2. MIC

Apply a 1 kHz, -20 dBm sine wave to the MIC terminal. Confirm that the PHONES L and R output noise is -22 dBm +/- 2 dB.

3. Noise Level

Confirm that the PHONES L and R output noise is less than -85 dBm when no sound is produced.

Note: 0 dBm = 0.775 V

FACTORY SETTINGS

The factory settings of the following parameters are not recallable:

- Help language
- Song volume
- Backup ON/OFF

All other settings can be reset to the initial factory values by turning the power switch on while holding down the rightmost key on the keyboard (C7).
When this is done, the message “Back up data erased and replaced by factory data” appears, to indicate that all backed up data has been erased and that the factory settings have been restored.
After this message has displayed for a few seconds, the main display will appear.

■ MESSAGES

● General (Panel Operation)

This button can't be used during recording or playback!

This message appears when you try to perform an operation (such as song data conversion) that cannot be performed during recording or playback..

⇛ Stop song recording or playback, or exit the Song Record or Song Play mode, then perform the operation again.

This button can't be used during playback!

This message appears when you try to perform an operation (such as selection of a style or Music Database setup) that cannot be performed during playback.

⇛ Stop song playback, or exit the Song Play mode, then perform the operation again.

This button can't be used while recording!

This message appears when you try to perform an operation (such as copying or deletion of song data) that cannot be performed in the Song Record mode.

⇛ Stop recording, or exit the Song Record mode, then perform the operation again.

This button can't be used when ACMP ASSIST is on!

This message appears when you try to perform an operation (such as the selection of a style, etc.) that cannot be performed during Accompaniment Assistance playback, or an operation (such as selection of a Guide Control function, etc.) that cannot be performed while editing Accompaniment Assistance data.

⇛ Turn the Accompaniment Assistance function off, then perform the operation again.

Button not valid!

A button that does not have a function in the current mode has been pressed.

● General (Direct Access)

Press a button to display corresponding settings.

This prompt appears when you press the [**DIRECT ACCESS**] button.

⇛ Press the panel button that corresponds to the settings you want to display. (Be sure to press the second button while this message is showing.)

DIRECT ACCESS not available for this function!

This message appears if you press [**DIRECT ACCESS**] followed by a panel button that does not correspond to a Direct Access display.

⇛ Press [**DIRECT ACCESS**] again, then press a panel button that corresponds to a Direct Access display.

● General (Disk-related)

No disk!

This prompt appears when there is no disk in the disk drive.

⇛ Put the proper disk in the drive and attempt the operation again.

No song!

This prompt appears when you attempt to rename or convert a song that doesn’t contain any data.

⇛ Select a song that contains data, or insert a disk with song data into the floppy disk drive.

No file!

This message appears when you attempt to load, rename, or delete a file, and no file of the specified type can be found on the disk in the disk drive.

⇛ Create a file or insert a disk with a proper file.

No data to save!

This message appears if you try to save Accompaniment Assistance data to disk when no Accompaniment Assistance data has been recorded. It also appears if you try to save a custom style to disk, but have selected a memory number that doesn’t contain any style data.

⇛ Create some Accompaniment Assistance data or a custom style, or select a memory number that contains custom style data.

Start disk format?

This message appears when a new or improperly formatted disk has been inserted into the disk drive.

⇛ Press **OK** if you want to format the disk. Press **CANCEL** if you want to abort the formatting process.

Protected disk!

This message appears when you attempt to record or perform other file operations using a disk whose write-protect tab is in the "protect" position.

⇛ Set the write-protect tab to the "write-enable" position, then try the operation again. If the operation still cannot be performed, the disk itself has internal write protection, making it impossible to perform recording or file operations on the disk.

Protected song!

This message appears when you attempt to record over parts or perform other operations on song files that are incompatible or do not allow such operations. Depending on the song file type, operations such as additional recording, copying, deleting, etc. may not be possible using the CVP-109/107/105/700.

Disk read/write error!

An error occurred while writing to (as in recording or storing files) or reading from the disk.

⇛ Try the operation again after pressing the **OK** button. If the error occurs a second time, the disk or the disk drive unit may be faulty.

Completed!

This appears for a few seconds when a time-consuming operation such as Format, Song Copy, etc., is finished.

Don't remove the disk!

This message is displayed while data is being transferred between the Clavinova and the disk.

⇛ The message disappears automatically when the operation is finished.

Are you sure?

When operations such as Song Delete or Format are selected, this prompts you to confirm whether you want to go ahead with the operation or not.

⇛ Press **YES** to execute the operation. Press **NO** to return to the previous display.

Disk full!

The currently loaded disk is full and cannot hold any more data.

⇛ Press the **OK** button, then delete any unnecessary data in the disk, or use a disk that has more available space. If this message appears during song recording, recording will stop and any data recorded up to that point will be saved automatically.

Too many files!

This message appears when you try to create more files than the disk is capable of storing. You can record up to 60 song files on a 2DD or 2HD disk. A 2DD disk can hold about 107 files (of various types), and a 2HD disk can hold up to about 219 files.

⇛ Press the **OK** button, then delete any unnecessary files from the disk, or use a disk that has more available space.

Same name! Overwrite?

A file with the same name already exists.

⇛ Press the **OK** button if you wish to overwrite the original file with new data, or press **CANCEL** to abort the operation.

Disk read/write operation in process!

This message appears when you try to execute other operations while reading data from the disk or saving data.

⇛ Wait until the data read/write operation is completed, then perform the operation again.

Convert to CVP song?

This message appears when you attempt to record over or edit the data of commercially available software or data recorded on instruments other than the CVP-109/107/105/700/103 or the CVP-94/92/98/96/600.

⇛ Press **YES** to convert the data for recording or editing on the CVP-109/107/105/700. Press NO if you don't want to convert the data.
It may not be possible to record to tracks other than tracks 1 and 2 of songs converted in this manner.

● General (Memory-related)

Not enough memory!

This message appears when the Clavinova's memory has become full while recording a song in the internal memory. If this happens, recording will stop and any data recorded up to that point will be saved automatically.

This message is also displayed if the Clavinova's memory becomes full when recording data in a custom style.

Memory write operation in process!

This message appears while the Clavinova is storing the data of a song recorded to the internal memory after it has been edited using the Track Edit or Initial Edit functions.

⇛ Complete the data write operation, then perform the other operation.

Delete CVP MEMORY?

This message appears when you execute an operation, such as playback of disk software, that will cause the Clavinova to delete data recorded to the internal memory.

⇛ Press **YES** to delete the data recorded to the internal memory, then perform the desired operation. Press the **NO** button if you want to keep the data.

This button can't be used for CVP MEMORY!

This message appears if you try to select one of the following functions while editing song data that has been recorded to the internal memory: Chord Sequence, Step Edit, Song Name, Setup Memory, or Vocal Harmony Memory.

⇛ Use the Song Copy function to copy the song to a disk, delete the **CVP MEMORY** song, then perform the desired operation using the data on the disk.

● Custom Style Mode

CUSTOM STYLE Select a source style.

This message appears for a few seconds when the Custom Style mode is engaged.

Clear style?

This confirmation prompt appears when you attempt to change the time signature of the custom style.

Clear section?

This confirmation prompt appears when you attempt to change the number of measures in a section of the custom style.

Clear part?

This confirmation prompt appears when you attempt to perform an operation that can only be performed after the part has been deleted.

Store Bossa NovaX?

This confirmation prompt appears when you store a custom style. It also appears if you try to change styles before you've stored the custom style

⇛ Select **OK** to store the custom style. Press **CANCEL** to return to the previous display without storing data.

This confirmation prompt appears when you attempt to exit the Custom Style mode before storing the custom style.

⇛ Select **YES** to store the custom style. Press **NO** to exit without storing. Press **CANCEL** to return to the previous display.

Can't recall!

This message appears when the previous version of the custom style cannot be recalled because the time signature has been changed.

Store in memory before saving to disk.

If you attempt to save a custom style to disk before storing it in memory, this message prompts you to store the style before proceeding.

Not enough memory! Delete an unneeded style or simplify the current style.

This message appears if there is not enough internal memory capacity available to store the custom style.

Select style to delete.

This message appears when **DELETE** is selected in the display shown above.

⇛ Select the style to be deleted and press the **OK** button. Press **CANCEL** if you do not want to delete the style.

Can't delete this style!

This message appears if the style selected for deletion in the display shown above is the source style on which the style currently being edited was based.

⇛ Press **OK** to return to the preceding display, and select a different style for deletion.

● Style File Load

Not enough memory! Delete an unneeded style?

This message appears if you attempt to load a Style file when the memory capacity is not sufficient to hold the specified file.

Too much data for LISTEN function! Load data.

Some Style files are too large to be handled by the LISTEN function.

⇛ Load the Style file, then use the normal playback methods to hear the style in question.

● Step Edit

Can't perform this operation on SYSTEM track!

This message appears if you try to record note data or perform a cut, copy, or paste operation on the SYSTEM track while editing a song with the Step Edit function.

⇛ Select a different track (1 through 16) and try the operation again.

Invalid data!

This message appears if you try to record an event that either contains invalid data (e.g., a System Exclusive event that is not terminated by an F7) or is located at an inappropriate timing (e.g., a Time Signature event in the middle of a measure).

⇛ Check the parameter settings in the event against the MIDI Data Format, then record the event again.

● Chord Sequence

Save recorded data?

This confirmation message appears if you attempt to exit the Chord Sequence function while recording.

⇛ Press **YES** to store the recorded data. Press **NO** to exit without storing. Press **CANCEL** to return to the Chord Sequence function without storing.

Button not valid! Enter at top of measure.

This message appears when you attempt to enter an accompaniment style or section change at a position other than the beginning of a measure while recording data with the Chord Sequence or Accompaniment Assistance functions.

⇛ Record the style or section change in question at the beginning of the measure.

● Other Record Edit

Write edited data?

This confirmation message appears if you attempt to exit the Initial Edit function without writing the data to disk.

⇛ Press **YES** to save the edited data. Press **NO** to exit without saving. Press **CANCEL** to return to the Initial Edit display without saving.

Save panel settings to disk?

This confirmation prompt appears when you execute the Setup Memory function to save the current panel settings with the song being edited in Song Record mode.

⇛ Select **YES** to save the panel settings. Press **CANCEL** to return to the RECORD EDIT 2 display without saving.

Save Vocal Harmony settings to disk?

This confirmation prompt appears when you execute the Vocal Harmony Memory function of the CVP-109/107/700 to save the current Vocal Harmony settings with the song being edited in Song Record mode.

⇛ Select **YES** to save the Vocal Harmony settings. Press **CANCEL** to return to the RECORD EDIT 2 display without saving.

● Song Copy & Disk Copy

Number of disk exchanges:

This message appears before you start a Song Copy or Disk Copy operation to inform you of the number of times the disks must be exchanged.

Insert disk 2 (destination disk). (##/##)

This message prompts you to insert the destination disk when copying data from one disk to another.

Destination disk isn't same type (2DD/2HD) as source!

This message appears when you try to copy data from a 2DD disk to a 2HD disk — or vice versa — using the Disk Copy function.

⇛ Press **OK** to cancel the copy operation, then perform the operation again from the beginning. Make sure the destination disk you insert is the same type (2DD or 2HD) as the source disk being copied.

Can't copy to source disk!

This message appears if you insert the source disk when prompted to insert the destination disk while using the Disk Copy function to copy data from one disk to another.

⇛ Press **OK** to cancel the copy operation, then execute the Disk Copy function again from the beginning. When exchanging disks during the copy operation, be careful not to confuse the source and destination disks.

Select destination song number.

When you first insert the destination disk while copying a song from one disk to another disk, this message prompts you to specify the song number to which the song is to be copied.

Insert disk 1 (source disk). (##/##)

This message prompts you to insert the source disk when copying data from one disk to another.

Incorrect Disk!

This message is displayed if you insert a disk other than the specified disk (source or destination) when prompted to exchange disks while using the Disk Copy function to copy data from one disk to another.

⇛ Press **OK** to cancel the copy operation, then execute the Disk Copy function again from the beginning. When exchanging disks during the copy operation, be careful to insert the correct disk as specified.

Select a different song number!

This message indicates that you have selected the same song number as both the source and the destination when copying a song within a disk.

⇛ Change the destination song number.

● Song Data Conversion

2HD disk not valid! Copy to 2DD disk.

This message appears if you attempt to convert song data that has been saved on a 2HD disk.

⇛ Press **OK** and copy the song data to be converted to a 2DD disk, then perform the data conversion using the 2DD disk.

Completed! Song No.##

Following conversion of the song data, this message displays the song number to which the data was saved.

● Hardware-related

Host is offline!

This message appears when the host computer is not turned on, the connecting cable is not properly connected, the HOST SELECT switch is not in the proper position, or the MIDI driver or MIDI application is not active.

⇛ Turn off both the Clavinova and the host computer. Check the cable connection and the position of the HOST SELECT switch, then turn on the computer first, followed by the Clavinova.

Back up data erased and replaced by factory data.

The Clavinova will retain data protected by the Backup function as long as it is used regularly. If the instrument is not turned on for a week or longer, however, the data may be lost. This message appears when the Clavinova is turned on after data has been lost. It also appears when you recall all factory data.

YAMAHA [Clavinova] Date :01-MAR-1999
Model CVP-700 MIDI Implementation Chart Version : 1.0

Function...		Transmitted	Recognized	Remarks
Basic	Default	1 - 16	1 - 16	Memorized
Channel	Changed	1 - 16 *1	1 - 16 *2	
Mode	Default	3	3	
	Messages	x	3, 4 (m=1) *3	
	Altered	**********	x	
Note Number	: True voice	0 - 127 **********	0 - 127 0 - 127	
Velocity	Note ON	o 9nH,v=1-127	o 9nH,v=1-127	
	Note OFF	x 9nH,v=0	x	
After	Key's	x	x	
Touch	Ch's	x	o	
Pitch Bend		o	o 0-24 semi	
Control Change	0,32	o	o	Bank Select
	1	x *4	o	Modulation
	5	x	o	Portamento Time
	7,10,11	o	o	
	6,38	o	o	Data Entry
	64,66,67	o	o	
	65	x	o	Portamento
	71-74	x *4	o	Sound Controller
	84	o	o	Portamento Cntrl
	91,93,94	o	o	Effect Depth
	96,97	x	o	RPN Inc,Dec
	98,99	x *4	o	NRPN LSB,MSB
	100,101	o	o	RPN LSB,MSB
Prog Change	: True #	o 0 - 127 **********	o 0 - 127	
System Exclusive		o	o	
Common	: Song Pos.	x	x	
	: Song Sel.	x	x	
	: Tune	x	x	
System Real Time	: Clock	o	o	
	: Commands	o	o	
Aux Mes-sages	: All Sound Off	x	o(120,126,127)	
	: Reset All Cntrls	x	o(121)	
	: Local ON/OFF	x	x	
	: All Notes OFF	x	o(123-125)	
	: Active Sense	o	o	
	: Reset	x	x	
Notes:				

Mode 1 : OMNI ON , POLY Mode 2 : OMNI ON ,MONO o : Yes
Mode 3 : OMNI OFF, POLY Mode 4 : OMNI OFF,MONO x : No

Notes:

*1: The send channel for the RIGHT1, RIGHT2, and LEFT parts can be set using the Send Channel (Keyboard) function. The transmission of accompaniment, harmony, and song data can be turned on or off using the Send Channel (Accompaniment/Harmony) and Song Transmission functions.

*2: Messages received on the channel set by the Remote Keyboard function are handled as operations performed directly on the keyboard or panel. Only the following messages are received on this channel:

- Note On/Off (A-1...C7)
- Control Changes
  - Bank Select MSB/LSB (RIGHT1 part)
  - Modulation
  - Data Entry MSB (when PITCH BEND SENS. is set by RPN LSB/MSB)
  - Volume
  - Expression
  - Sustain
  - Sostenuto
  - Soft Pedal
  - Data Increment/Decrement (when PITCH BEND SENS. is set by RPN LSB/MSB)
  - RPN LSB/MSB (PITCH BEND SENS. only)
  - All Note Off
- Program Change (RIGHT1 part)
- Pitch Bend

*3: “m” is always treated as “1” regardless of its value.

*4: Transmitted when ACMP&RHY or HARMONY setting of Send Channel (Accompaniment/Harmony) function is on.

MIDI DATA FORMAT

Many MIDI messages listed in the MIDI Data Format are expressed in decimal numbers, binary numbers and hexadecimal numbers. Hexadecimal numbers may include the letter “H” as a suffix. Also, “n” can freely be defined as any whole number.
To enter data/values, refer to the table below.

Decimal	Hexadecimal	Binary
0	00	0000 0000
1	01	0000 0001
2	02	0000 0010
3	03	0000 0011
4	04	0000 0100
5	05	0000 0101
6	06	0000 0110
7	07	0000 0111
8	08	0000 1000
9	09	0000 1001
10	0A	0000 1010
11	0B	0000 1011
12	0C	0000 1100
13	0D	0000 1101
14	0E	0000 1110
15	0F	0000 1111
16	10	0001 0000
17	11	0001 0001
18	12	0001 0010
19	13	0001 0011
20	14	0001 0100
21	15	0001 0101
22	16	0001 0110
23	17	0001 0111
24	18	0001 1000
25	19	0001 1001
26	1A	0001 1010
27	1B	0001 1011
28	1C	0001 1100
29	1D	0001 1101
30	1E	0001 1110
31	1F	0001 1111
32	20	0010 0000
33	21	0010 0001
34	22	0010 0010
35	23	0010 0011
36	24	0010 0100
37	25	0010 0101
38	26	0010 0110
39	27	0010 0111
40	28	0010 1000
41	29	0010 1001
42	2A	0010 1010
43	2B	0010 1011
44	2C	0010 1100
45	2D	0010 1101
46	2E	0010 1110
47	2F	0010 1111
48	30	0011 0000
49	31	0011 0001
50	32	0011 0010
51	33	0011 0011
52	34	0011 0100
53	35	0011 0101
54	36	0011 0110
55	37	0011 0111
56	38	0011 1000
57	39	0011 1001
58	3A	0011 1010
59	3B	0011 1011
60	3C	0011 1100
61	3D	0011 1101
62	3E	0011 1110
63	3F	0011 1111

Decimal	Hexadecimal	Binary
64	40	0100 0000
65	41	0100 0001
66	42	0100 0010
67	43	0100 0011
68	44	0100 0100
69	45	0100 0101
70	46	0100 0110
71	47	0100 0111
72	48	0100 1000
73	49	0100 1001
74	4A	0100 1010
75	4B	0100 1011
76	4C	0100 1100
77	4D	0100 1101
78	4E	0100 1110
79	4F	0100 1111
80	50	0101 0000
81	51	0101 0001
82	52	0101 0010
83	53	0101 0011
84	54	0101 0100
85	55	0101 0101
86	56	0101 0110
87	57	0101 0111
88	58	0101 1000
89	59	0101 1001
90	5A	0101 1010
91	5B	0101 1011
92	5C	0101 1100
93	5D	0101 1101
94	5E	0101 1110
95	5F	0101 1111
96	60	0110 0000
97	61	0110 0001
98	62	0110 0010
99	63	0110 0011
100	64	0110 0100
101	65	0110 0101
102	66	0110 0110
103	67	0110 0111
104	68	0110 1000
105	69	0110 1001
106	6A	0110 1010
107	6B	0110 1011
108	6C	0110 1100
109	6D	0110 1101
110	6E	0110 1110
111	6F	0110 1111
112	70	0111 0000
113	71	0111 0001
114	72	0111 0010
115	73	0111 0011
116	74	0111 0100
117	75	0111 0101
118	76	0111 0110
119	77	0111 0111
120	78	0111 1000
121	79	0111 1001
122	7A	0111 1010
123	7B	0111 1011
124	7C	0111 1100
125	7D	0111 1101
126	7E	0111 1110
127	7F	0111 1111

- Except the table above, for example 144-159(decimal)/9nH/1001 0000-1001 1111(binary) displays the Note On Message for each channel (1-16). 176-191/BnH/1011 0000-1011 1111 displays the Control Change Message for each channel (1-16). 192-207/CnH/1100 0000-1100 1111 displays the Program Change Message for each channel (1-16). 240/F0H/1111 0000 denotes the start of a System Exclusive Message. 247/F7H/1111 0111 denotes the end of a System Exclusive Message.
- aaH (hexidecimal)/0aaaaaaa (binary) denotes the data address. The address contains High, Mid, and Low.
- bbH/0bbbbbbb denotes the byte count.
- ccH/0ccccccc denotes the check sum.
- ddH/0ddddddd denotes the data/value.

1. TRANSMIT FLOW

```
MIDI OUT
  KEY OFF                    8nH
  KEY ON/OFF                 9nH

  CONTROL CHANGE             BnH
  BANK SELECT MSB            BnH,00H
    BANK SELECT LSB          BnH,20H
    DATA ENTRY MSB           BnH,06H
    DATA ENTRY LSB           BnH,26H
    MAIN VOLUME              BnH,07H
    PANPOT                   BnH,0AH
    EXPRESSION               BnH,0BH
    SUSTAIN                  BnH,40H
    SOSTENUTE                BnH,42H
    SOFT PEDAL               BnH,43H
    PORTAMENTO CONTROL       BnH,54H
    REVERB SEND LEVEL        BnH,5BH
    CHORUS SEND LEVEL        BnH,5DH
    VARIATION SEND LEVEL     BnH,5EH
    RPN LSB                  BnH,64H
    RPN MSB                  BnH,65H
    PITCH BEND SENS.         BnH,65H,00H,64H,00H,06H,mmH

  PROGRAM CHANGE             CnH

  SYSTEM EXCLUSIVE MESSAGE
    <YAMAHA MIDI FORMAT>
    <UNIVERSAL>
  UNIVERSAL NON-REALTIME     F0H 7EH.....F7H
    <XG STANDARD>
  XG PARAMETER CHANGE        F0H 43H 1nH 4CH aaH aaH aaH ddH
                                                  .....ddH F7H
  XG BULK DUMP               F0H 43H 0nH 4CH bbH bbH aaH aaH
                                       aaH ddH.....ddH ccH F7H
    <CLAVINOVA MIDI COMPLIANCE>
    <SPECIAL OPERATORS>

  SYSTEM REALTIME MESSAGE
    MIDI CLOCK               F8H
    START                    FAH
    STOP                     FCH
    ACTIVE SENSING           FEH
```

2. RECEIVE FLOW

```
MIDI IN
  KEY OFF                    8nH

  KEY ON/OFF                 9nH

  CONTROL CHANGE
    BANK SELECT MSB          BnH,00H
    BANK SELECT LSB          BnH,20H
    MODULATION               BnH,01H
    PORTAMENTO TIME          BnH,05H
    DATA ENTRY MSB           BnH,06H
    DATA ENTRY LSB           BnH,26H
    MAIN VOLUME              BnH,07H
    PANPOT                   BnH,0AH
    EXPRESSION               BnH,0BH
    SUSTAIN                  BnH,40H
    PORTAMENTO               BnH,41H
    SOSTENUTO                BnH,42H
    SOFT PEDAL               BnH,43H
    HARMONIC CONTENT         BnH,47H
    RELEASE TIME             BnH,48H
    ATTACK TIME              BnH,49H
    BRIGHTNESS               BnH,4AH
    PORTAMENTO CONTROL       BnH,54H
    REVERB SEND LEVEL        BnH,5BH
    CHORUS SEND LEVEL        BnH,5DH
    VARIATION SEND LEVEL     BnH,5EH
    DATA INCREMENT           BnH,60H
    DATA DECREMENT           BnH,61H
    NRPN LSB                 BnH,62H
    NRPN MSB                 BnH,63H
      VIBRATO RATE           BnH,63H,01H,62H,08H,06H,mmH
      VIBRATO DEPTH          BnH,63H,01H,62H,09H,06H,mmH
      VIBRATO DELAY          BnH,63H,01H,62H,0AH,06H,mmH
      FILTER CUTOFF FREQ.    BnH,63H,01H,62H,20H,06H,mmH
      FILTER RESONANCE       BnH,63H,01H,62H,21H,06H,mmH
      EQ BASS                BnH,63H,01H,62H,30H,06H,mmH
      EQ TREBLE              BnH,63H,01H,62H,31H,06H,mmH
      EQ BASS FREQ.          BnH,63H,01H,62H,34H,06H,mmH
      EQ TREBLE FREQ.        BnH,63H,01H,62H,35H,06H,mmH
      EG ATTACK TIME         BnH,63H,01H,62H,63H,06H,mmH
      EG DECAY TIME          BnH,63H,01H,62H,64H,06H,mmH
      EG RELEASE             BnH,63H,01H,62H,66H,06H,mmH
      DRUM INST                                        *1
        CUTOFF FREQ.         BnH,63H,14H,62H,rrH,06H,mmH
        FILTER RESONANCE     BnH,63H,15H,62H,rrH,06H,mmH
        EG ATTACK RATE       BnH,63H,16H,62H,rrH,06H,mmH
        EG DECAY RATE        BnH,63H,17H,62H,rrH,06H,mmH
        PITCH COARSE         BnH,63H,18H,62H,rrH,06H,mmH
```

```
      PITCH FINE              BnH,63H,19H,62H,rrH,06H,mmH
      LEVEL                   BnH,63H,1AH,62H,rrH,06H,mmH
      PANPOT                  BnH,63H,1CH,62H,rrH,06H,mmH
      REVERB SEND             BnH,63H,1DH,62H,rrH,06H,mmH
      CHORUS SEND             BnH,63H,1EH,62H,rrH,06H,mmH
      VARIATION SEND          BnH,63H,1FH,62H,rrH,06H,mmH
    RPN LSB                   BnH,64H
    RPN MSB                   BnH,65H
      PITCH BEND SENS.        BnH,65H,00H,64H,00H,06H,mmH
      FINE TUNING             BnH,65H,00H,64H,01H,06H,mmH,
                                                    26H,llH
      COARSE TUNING           BnH,65H,00H,64H,02H,06H,mmH
      NULL                    BnH,65H,7FH,64H,7FH
    ALL SOUND OFF             BnH,78H,00H
    RESET ALL CONTROLLERS     BnH,79H,00H
    ALL NOTES OFF             BnH,7BH,00H
    OMNI OFF                  BnH,7CH,00H
    OMNI ON                   BnH,7DH,00H
    MONO                      BnH,7EH
    POLY                      BnH,7FH

- PROGRAM CHANGE             CnH

- CHANNEL AFTER TOUCH        DnH

- PITCH BEND CHANGE          EnH

- SYSTEM EXCLUSIVE MESSAGE
    <YAMAHA MIDI FORMAT>
    <UNIVERSAL>
  - UNIVERSAL REALTIME        F0H 7FH.....F7H
  - UNIVERSAL NON-REALTIME    F0H 7EH.....F7H
    <XG STANDARD>             F0H 43H 1nH 4CH aaH aaH aaH ddH
  - XG PARAMETER CHANGE                          .....ddH F7H
                              F0H 43H 0nH 4CH bbH bbH aaH aaH
  - XG BULK DUMP                     aaH ddH.....ddH ccH F7H
                              F0H 43H 3nH 4CH aaH aaH aaH F7H
  - PARAMETER REQUEST         F0H 43H 2nH 4CH aaH aaH aaH F7H
  - DUMP REQUEST
    <CLAVINOVA MIDI COMPLIANCE>
    <SPETIAL OPERATORS>
    <Others>

- SYSTEM REALTIME MESSAGE
    MIDI CLOCK                F8H
    START                     FAH
    STOP                      FCH
    ACTIVE SENSING            FEH
```

3. TRANSMIT/RECEIVE DATA

3-1 CHANNEL VOICE MESSAGES

3-1-1 KEY OFF

```
STATUS          1000nnnn(8nH)   n = 0 - 15 VOICE CHANNEL NUMBER
NOTE NUMBER     0kkkkkkk        k = 0 (C-2) - 127 (G8)
VELOCITY        0vvvvvvv        v: ignored
```

3-1-2 KEY ON/OFF

```
STATUS          1001nnnn(9nH)   n = 0 - 15 VOICE CHANNEL NUMBER
NOTE NUMBER     0kkkkkkk        k = 0 (C-2) - 127 (G8)
VELOCITY        0vvvvvvv        (v ≠ 0) NOTE ON
                00000000        (v = 0) NOTE OFF
```

3-1-3 PROGRAM CHANGE

```
STATUS          1100nnnn(CnH)   n = 0 - 15 VOICE CHANNEL NUMBER
PROGRAM NUMBER  0ppppppp        p = 0 - 127
```

*** PROGRAM NUMBER: XG DRUM VOICE number correspondence**

```
P = 0    Standard Kit
P = 1    Standard2 Kit
P = 4    Hit Kit
P = 8    Room Kit
P = 16   Rock Kit
P = 24   Electro Kit
P = 25   Analog Kit
P = 27   Dance Kit
P = 32   Jazz Kit
P = 40   Brush Kit
P = 48   Classic Kit
```

*** PROGRAM NUMBER: XG SFX KIT number correspondence**

```
P = 0    SFX1 Kit
P = 1    SFX2 Kit
```

When DRUM VOICE is selected and program change data for a different DRUM VOICE is received, the currently selected DRUM VOICE will be replaced with the new DRUM VOICE.

3-1-4 CHANNEL AFTER TOUCH (Receive only)

```
STATUS          1101nnnn(DnH)   n = 0 - 15 VOICE CHANNEL NUMBER
VALUE           0vvvvvvv        v = 0 - 127 AFTER TOUCH VALUE
```

3-1-5 PITCH BEND CHANGE

```
STATUS          1110nnnn(EnH)   n = 0 - 15 VOICE CHANNEL NUMBER
LSB             0vvvvvvv        PITCH BEND CHANGE LSB
MSB             0vvvvvvv        PITCH BEND CHANGE MSB
```

3-1-6 CONTROL CHANGE

```
STATUS1011nnnn(BnH)             n = 0 - 15 VOICE CHANNEL NUMBER
CONTROL NUMBER      0ccccccc
CONTROL VALUE       0vvvvvvv
```

*** Transmit CONTROL NUMBER.**

```
c = 0     BANK SELECT MSB      ; v = 0:XG NORMAL,
                                     64:SFX NORMAL,
                                     126:XG SFX KIT,
                                     127:XG DRUM
c = 32    BANK SELECT LSB      ; v = 0 - 127
c =  6    DATA ENTRY MSB       ; v = 0 - 127                *1
c = 38    DATA ENTRY LSB       ; v = 0 - 127                *1
c =  7    MAIN VOLUME          ; v = 0 - 127
c = 10    PANPOT               ; v = 0 - 127
c = 11    EXPRESSION           ; v = 0 - 127
c = 64    SUSTAIN              ; v = 0-63:OFF , 64-127:ON   *2
c = 66    SOSTENUTO            ; v = 0-63:OFF , 64-127:ON   *2
c = 67    SOFT PEDAL           ; v = 0-63:OFF , 64-127:ON   *2
c = 84    PORTAMENTO CONTROL   ; v = 0 - 127
c = 91    REVERB SEND LEVEL    ; v = 0 - 127
c = 93    CHORUS SEND LEVEL    ; v = 0 - 127
c = 94    VARIATION SEND LEVEL ; v = 0 - 127
                                 (When only Connection = 1[System])
c = 100   RPN LSB              ; v = 0 - 127
c = 101   RPN MSB              ; v = 0 - 127
```

*** Receive CONTROL NUMBER.**

```
c =  0    BANK SELECT MSB      ; v = 0:XG NORMAL,
                                     64:SFX NORMAL,
                                     126:XG SFX KIT,
                                     127:XG DRUM
c = 32    BANK SELECT LSB      ; v = 0 - 127
c =  1    MODULATION           ; v = 0 - 127                *2
c =  5    PORTAMENTO TIME      ; v = 0 - 127                *2
c =  6    DATA ENTRY MSB       ; v = 0 - 127                *1
c = 38    DATA ENTRY LSB       ; v = 0 - 127                *1
c =  7    MAIN VOLUME          ; v = 0 - 127
c = 10    PANPOT               ; v = 0 - 127
c = 11    EXPRESSION           ; v = 0 - 127
c = 64    SUSTAIN              ; v = 0-63:OFF , 64-127:ON   *2
c = 65    PORTAMENTO           ; v = 0-63:OFF , 64-127:ON   *2
c = 66    SOSTENUTO            ; v = 0-63:OFF , 64-127:ON   *2
c = 67    SOFT PEDAL           ; v = 0-63:OFF , 64-127:ON   *2
c = 71    HARMONIC CONTENT     ; v = 0:-64 - 64:0 - 127:+63 *2
c = 72    RELEASE TIME         ; v = 0:-64 - 64:0 - 127:+63 *2
c = 73    ATTACK TIME          ; v = 0:-64 - 64:0 - 127:+63 *2
c = 74    BRIGHTNESS           ; v = 0:-64 - 64:0 - 127:+63 *2
c = 84    PORTAMENT CONTROL    ; v = 0 - 127                *2
c = 91    REVERB SEND LEVEL    ; v = 0 - 127
c = 93    CHORUS SEND LEVEL    ; v = 0 - 127
c = 94    VARIATION SEND LEVEL ; v = 0 - 127
                                 (When only Connection = 1[System])
c = 96    DATA INCREMENT       ; v = 0 - 127                *1
c = 97    DATA DECREMENT       ; v = 0 - 127                *1
          RPN MSB/LSB, NRPN MSB/LSB
```

*1 Only when setting the appointed parameter with RPN, NRPN.
*2 Does not effect Rhythm Voice.

- Until a PROGRAM CHANGE message is received, the BANK SELECT operation will be suspended. When a Voice, including VOICE BANK, is changed, set the BANK SELECT and Program Change Message, and transmit in the following order, BANK SELECT MSB, LSB, PROGRAM CHANGE.

- MODULATION controls the Vibrato Depth.

- PORTAMENTO TIME controls the Pitch Change Speed when the Portamento Switch = ON. 0 being the shortest time, and 127 being the longest.

- PANPOT changes the value for the melody voice and rhythm voice in relation to the preset value.

- Portamento time is fixed to 0 when the PORTAMENTO CONTROL is used.

- HARMONIC CONTENT applies adjustment to the resonance value that is set by the voice. This parameter specifies relative change with the value of 64 producing 0 adjustment. As values get higher the sound becomes increasingly eccentric. Note that for some voices the effective parameter range is narrower than the legal parameter range.

- RELEASE TIME applies adjustment to the envelope release time set by the voice. This parameter specifies relative change with the value of 64 producing 0 adjustment.

- ATTACK TIME applies adjustment to the envelope attack time set by the voice. This parameter specifies relative change with the value of 64 producing 0 adjustment.

- BRIGHTNESS applies adjustment to the cut-off frequency set by the voice. This parameter specifies relative change with the value of 64 producing 0 adjustment. Lower voices produce a softer sound. For some voices the effective parameter range is narrower than the legal parameter range.

3-2 CHANNEL MODE MESSAGES

```
STATUS          1011nnnn(BnH)   n = 0 - 15 VOICE CHANNEL NUMBER
CONTROL NUMBER  0ccccccc        c = CONTROL NUMBER
CONTROL VALUE   0vvvvvvv        v = DATA VALUE
```

3-2-1 ALL SOUND OFF (Receive only)
(CONTROL NUMBER = 78H , DATA VALUE = 0)

Switches off all sound from the channel. Does not reset Note On and Hold On conditions established by Channel Messages.

3-2-2 RESET ALL CONTROLLERS (Receive only)
(CONTROL NUMBER = 79H , DATA VALUE = 0)

Resets controllers as follows.

```
PITCH BEND CHANGE    0 (Center)
AFTER TOUCH          0 (min.)
MODULATION           0 (min.)
EXPRESSION           127 (max.)
SUSTAIN              0 (off)
SOSTENUTO            0 (off)
SOFT PEDAL           0 (off)
NRPN                 Sets number to null. (Internal data remains unchanged)
RPN                  Sets number to null. (Internal data remains unchanged)
PORTAMENT CONTROL    Resets portamento source note number
PORTAMENTO           0 (off)
```

3-2-3 ALL NOTES OFF (Receive only)
(CONTROL NUMBER = 7BH , DATA VALUE = 0)

Switches off all of the channel's "on" notes. However, any notes being held by SUSTAIN or SOSTENUTO continue to sound until SUSTAIN/SOSTENUTO goes off.

3-2-4 OMNI OFF (Receive only)
(CONTROL NUMBER = 7CH , DATA VALUE = 0)

Same processing as for All Notes Off.

3-2-5 OMNI ON (Receive only)
(CONTROL NUMBER = 7DH , DATA VALUE = 0)

Same processing as for All Notes Off. Omni On is not executed.

3-2-6 MONO (Receive only)
(CONTROL NUMBER = 7EH , DATA VALUE = 0)

Same processing as for All Notes Off. If the 3rd byte is in a range of 0-16 the corresponding channel will be changed to Mode 4 (m=1).

3-2-7 POLY (Receive only)
(CONTROL NUMBER = 7FH , DATA VALUE = 0)

Same processing as for All Sounds Off and the corresponding channel will be changed to Mode 3.

3-3 REGISTERED PARAMETER NUMBER(RPN)

```
STATUS          1011nnnn(BnH)  n = 0 - 15 VOICE CHANNEL NUMBER
RPN LSB         01100100(64H)
RPN LSB NUMBER  0ppppppp       p = RPN LSB (refer to the list below)
RPN MSB         01100101(65H)
RPN MSB NUMBER  0qqqqqqq       q = RPN MSB (refer to the list below)
DATA ENTRY MSB  00000110(06H)
DATA VALUE      0mmmmmmm       m = Data Value
DATA ENTRY LSB  00100110(26H)
DATA VALUE      0lllllll       l = Data Value
```

First appoints the parameter for RPN MSB/LSB, then sets the parameter value for data entry MSB/LSB.

```
RPN     D.ENTRY
LSB MSB MSB LSB PARAMETER  NAME          DATA RANGE
00H 00H mmH -   PITCH BEND SENSITIVITY   00H-18H (0 - 24 semitones)
01H 00H mmH llH FINE TUNE       {mmH,llH} = {00H,00H}-{40H,00H}-{7FH,7FH}
                                  (-8192*100/8192) - 0 - (+8192*100/8192)
02H 00H mmH -   COARSE TUNE      28H - 40H - 58H (-24 - 0 - +24 semitones)
7FH 7FH -   -   NULL
```

Clears the current RPN number setting. Does not change the internal parameter settings.

3-4 NON-REGISTERED PARAMETER NUMBER(NRPN) (Receive only)

```
STATUS          1011nnnn(BnH)  n = 0 - 15 VOICE CHANNEL NUMBER
NRPN LSB        01100010(62H)
NRPN LSB NUMBER 0ppppppp       p = NRPN LSB (refer to the list below)
NRPN MSB        01100011(63H)
NRPN MSB NUMBER 0qqqqqqq       q = NRPN MSB (refer to the list below)
DATA ENTRY MSB  00000110(06H)
DATA VALUE      0mmmmmmm       m = Data Value
```

First appoints the parameter for NRPN MSB/LSB, then sets the parameter value for data entry MSB/LSB.

```
NRPN    D.ENTRY
MSB LSB MSB LSB PARAMETER NAME        DATA RANGE
01H 08H mmH —   VIBRATO RATE         00H - 40H - 7FH (-64 - 0 - +63)
01H 09H mmH —   VIBRATO DEPTH        00H - 40H - 7FH (-64 - 0 - +63)
01H 0AH mmH —   VIBRATO DELAY        00H - 40H - 7FH (-64 - 0 - +63)
01H 20H mmH —   FILTER CUTOFF FREQUENCY 00H - 40H - 7FH (-64 - 0 - +63)
01H 21H mmH —   FILTER RESONANCE     00H - 40H - 7FH (-64 - 0 - +63)
01H 30H mmH —   EQ BASS              00H - 40H - 7FH (-64 - 0 - +63)
01H 31H mmH —   EQ TREBLE            00H - 40H - 7FH (-64 - 0 - +63)
01H 34H mmH —   EQ BASS FREQ.        00H - 40H - 7FH (-64 - 0 - +63)
01H 35H mmH —   EQ TREBLE FREQ.      00H - 40H - 7FH (-64 - 0 - +63)
01H 63H mmH —   EG ATTACK TIME       00H - 40H - 7FH (-64 - 0 - +63)
01H 64H mmH —   EG DECAY TIME        00H - 40H - 7FH (-64 - 0 - +63)
01H 66H mmH —   EG RELEASE           00H - 40H - 7FH (-64 - 0 - +63)
14H rrH mmH —   DRUM FILTER CUTOFF FREQ. 00H - 40H - 7FH (-64 - 0 - +63)
15H rrH mmH —   DRUM FILTER RESONANCE 00H - 40H - 7FH (-64 - 0 - +63)
16H rrH mmH —   DRUM AEG ATTACK RATE  00H - 40H - 7FH (-64 - 0 - +63)
17H rrH mmH —   DRUM AEG DECAY RATE   00H - 40H - 7FH (-64 - 0 - +63)
18H rrH mmH —   DRUM PITCH COARSE     00H - 40H - 7FH (-64 - 0 - +63)
19H rrH mmH —   DRUM PITCH FINE       00H - 40H - 7FH (-64 - 0 - +63)
1AH rrH mmH —   DRUM LEVEL            00H - 7FH (0 - max.)
1CH rrH mmH —   DRUM PANPOT           00H   ,01H  - 40H   - 7FH
                                      (random,left - center - right)
1DH rrH mmH —   DRUM REVERB SEND LEVEL 00H - 7FH (0 - max.)
1EH rrH mmH —   DRUM CHORUS SEND LEVEL 00H - 7FH (0 - max.)
1FH rrH mmH —   DRUM VARIATION SEND LEVEL 00H - 7FH (0 - max.)
```

The MSB 14H-1FH (for drums) message is received when multi-part parameters PART MODE = DRUMS1...2.
rrH : drum instrument note number

3-5 SYSTEM REALTIME MESSAGES

3-5-1 MIDI CLOCK

```
STATUS      11111000  (F8H)
```

Transmission: 96 clocks per measure are transmitted.
Reception: If the instrument's clock is set to external, after FAH is received from the external device the instrument's clock will sync with the 96 beats per measure received from the external device.
Decides whether the internal clock, or Timing Clocks received via the MIDI IN will be used.

3-5-2 START

```
STATUS      11111010  (FAH)
```

Transmission: Transmitted when instrument's Rhythm or Song playback is started.
Reception: Depending upon the condition, Rhythm, Song Playback, or Song Rec will start.

3-5-3 STOP

```
STATUS      11111100  (FCH)
```

Transmission: Transmitted when instrument's Rhythm or Song playback is stopped.
Reception: Depending upon the condition, Rhythm, Song Playback, or Song Rec will stop.

3-5-4 ACTIVE SENSING

```
STATUS      11111110  (FEH)
```

Transmission: Transmitted approximately once every 200msec.
Reception: Sensing is started once this Code is received. If Status or Data is not received within 400ms, the MIDI Receive Buffer will be cleared, and all notes, including those being sustained, will be cut OFF. Also, all control values will be reset to their factory defaults.

3-6 SYSTEM EXCLUSIVE MESSAGE

3-6-1 YAMAHA MIDI FORMAT

3-6-1-1 SECTION CONTROL

binary	hexadecimal	
11110000	F0	Exclusive status
01000011	43	YAMAHA ID
01111110	7E	Style
00000000	00	
0sssssss	SS	Switch No.
		00H : INTRO A
		01H : INTRO B
		02H : INTRO C/D
		03H~07H : INTRO C/D
		08H : MAIN A
		09H : MAIN B
		0AH : MAIN C
		0BH~0FH : MAIN D
		10H : FILL IN A
		11H : FILL IN B
		12H : FILL IN C
		13H~17H : FILL IN D
		18H : BREAK FILL
		19H : BREAK FILL
		1AH : BREAK FILL
		1BH~1FH : BREAK FILL
		20H : ENDING A
		21H : ENDING B
		22H : ENDING C/D
		23H~27H : ENDING C/D
0ddddddd	DD	Switch On/Off: 00H(Off),7FH(On)
11110111	F7	End of Exclusive

When an ON code is received, the appointed section will be changed.

3-6-1-2 TEMPO CONTROL

binary	hexadecimal	
11110000	F0	Exclusive status
01000011	43	YAMAHA ID
01111110	7E	Style
00000000	01	
0ttttttt	TT	Tempo4
0ttttttt	TT	Tempo3
0ttttttt	TT	Tempo2
0ttttttt	TT	Tempo1
11110111	F7	End of Exclusive

The internal clock will be set to the received Tempo value.
Tempo Meta Event is a large data block (24-bit), it is divided into 4 groups with 7-bits going into each of the Tempos 1-4 (4 receives the remaining 3 bits).

3-6-1-3 CHORD CONTROL type1

binary	hexadecimal	
11110000	F0	Exclusive status
01000011	43	YAMAHA ID
01111110	7E	Style
00000010	02	type 1
0ddddddd	dd	chord root(cr)
0ddddddd	dd	chord type(ct)
0ddddddd	dd	bass note(bn)
0ddddddd	dd	bass type(bt)
11111110	F7	End of Exclusive

Chord transmit: Transmitted using type 1 format.

cr Chord Root 0kkknnnn (kkk:Change symbol, nnnn:Note)

Binary	Hex	Change symbol	Binary	Hex	Note
0000nnnn	0n	bbb(3 flats)	0kkk0000	k0	reserved
0001nnnn	1n	bb (2 flats)	0kkk0001	k1	C
0010nnnn	2n	b (1 flat)	0kkk0010	k2	D
0011nnnn	3n	natural	0kkk0011	k3	E
0100nnnn	4n	# (1 sharp)	0kkk0100	k4	F
0101nnnn	5n	## (2 sharps)	0kkk0101	k5	G
0110nnnn	6n	###(3 sharps)	0kkk0110	k6	A
			0kkk0111	k7	B

ct Chord Type 0 - 34,127

Binary	Hex	Dec	Chord type	Binary	Hex	Dec	Chord type
00000000	00	0	Maj	00010010	12	18	dim7
00000001	01	1	Maj6	00010011	13	19	7th
00000010	02	2	Maj7	00010100	14	20	7sus4
00000011	03	3	Maj7(#11)	00010101	15	21	7b5
00000100	04	4	Maj(9)	00010110	16	22	7(9)
00000101	05	5	Maj7(9)	00010111	17	23	7(#11)
00000110	06	6	Maj6(9)	00011000	18	24	7(13)
00000111	07	7	aug	00011001	19	25	7(b9)
00001000	08	8	min	00011010	1A	26	7(b13)
00001001	09	9	min6	00011011	1B	27	7(#9)
00001010	0A	10	min7	00011100	1C	28	Maj7aug
00001011	0B	11	min7b5	00011101	1D	29	7aug
00001100	0C	12	min(9)	00011110	1E	30	1+8
00001101	0D	13	min7(9)	00011111	1F	31	1+5
00001110	0E	14	min7(11)	00100000	20	32	sus4
00001111	0F	15	minMaj7	00100001	21	33	1+2+5
00010000	10	16	minMaj7(9)	00100010	22	34	cc
00010001	11	17	dim				

bn	On Bass Note	Same as Chord root, 127:No bass chord
bt	Bass Chord	Same as Chord type 127:No bass chord

3-6-2 UNIVERSAL SYSTEM EXCLUSIVE

3-6-2-1 UNIVERSAL REALTIME MESSAGE

3-6-2-1-1 MIDI MASTER VOLUME (Receive only)

binary	hexadecimal	
11110000	F0	Exclusive status
01111110	7F	Universal Realtime
01111111	7F	ID of target Device
00001001	04	Sub-ID #1=Device Control Message
00000001	01	Sub-ID #2=Master Volume
0sssssss	SS	Volume LSB
0ttttttt	TT	Volume MSB
11110111	F7	End of Exclusive
or		
11110000	F0	Exclusive status
01111110	7F	Universal Realtime
0xxxnnnn	XN	When N is received N=0-F, whichever is received. When N is transmitted N always=0. X = don't care
00001001	04	Sub-ID #1=Device Control Message
00000001	01	Sub-ID #2=Master Volume
0sssssss	SS	Volume LSB
0ttttttt	TT	Volume MSB
11110111	F7	End of Exclusive

The volume for all channels will be changed simultaneously.
The TT value is used as the MIDI Master Volume value. (the SS value is ignored.)

3-6-2-2 UNIVERSAL NON REALTIME MESSAGE

3-6-2-2-1 GENERAL MIDI SYSTEM ON

binary	hexadecimal	
11110000	F0	Exclusive status
01111110	7E	Universal Non-Realtime
01111111	7F	ID of target Device
00001001	09	Sub-ID #1=General MIDI Message
00000001	01	Sub-ID #2=General MIDI On
11110111	F7	End of Exclusive
or		
11110000	F0	Exclusive status
01111110	7E	Universal Non-Realtime
0xxxnnnn	XN	When N is received N=0-F, whichever is received. When N is transmitted N always=0. X = don't care
00001001	09	Sub-ID #1=General MIDI Message
00000001	01	Sub-ID #2=General MIDI On
11110111	F7	End of Exclusive

Depending upon the received ON message, the System Mode will be changed to XG.
Except MIDI Master Tuning, all control data be reset to default values.
This message requires approximately 50ms to execute, so sufficient time should be allowed before the next message is sent.

After the GM System ON message is received, message reception of the following will be limited.

- Bank Select MSB-LSB in channel 10 will be ignored and the drum voice will be fixed.
- Bank Select MSB-LSB except in channel 10 will be ignored except 127/0.
- NRPN is not received.

When XG SYSTEM ON is received, these restrictions will be cancelled.

3-6-3 XG STANDARD

3-6-3-1 XG PARAMETER CHANGE

3-6-3-1-1 XG SYSTEM ON

binary	hexadecimal	
11110000	F0	Exclusive status
01000011	43	YAMAHA ID
0001nnnn	1N	Device Number
01001100	4C	Model ID
00000000	00	Address High
00000000	00	Address Mid
01111110	7E	Address Low
00000000	00	Data
11110111	F7	End of Exclusive

Depending upon the received ON message, the SYSTEM MODE will be changed to XG.Controllers will be reset, all values of Multi Part and Effect, and All System values denoted by “XG” data within All System will be reset to default values in the table.
This message requires approximately 50ms to execute, so sufficient time should be allowed before the next message is sent.

3-6-3-1-2 XG PARMETER CHANGE

binary	hexadecimal	
11110000	F0	Exclusive status
01000011	43	YAMAHA ID
0001nnnn	1N	Device Number
01001100	4C	Model ID
0aaaaaaa	AA	Address High
0aaaaaaa	AA	Address Mid
0aaaaaaa	AA	Address Low
0ddddddd	DD	Data
|	|	
11110111	F7	End of Exclusive

For parameters with data size of 2 or 4, transmit the appropriate number of data bytes.
For more information on Address and Parameters, refer to < Table 1-2 > and < Table 1-4 > ~ < Table 1-10 >.

The following Parameter Changes are handled.

XG System Data
Multi Effect 1 Data
Multi EQ Data
Multi Effect 2 Data
Special Effect Data
Multi Part Data
A/D Part Data
Drums Setup Data

3-6-3-2 XG BULK DUMP

binary	hexadecimal	
11110000	F0	Exclusive status
01000011	43	YAMAHA ID
0000nnnn	0N	Device Number
01001100	4C	Model ID
0bbbbbbb	BB	ByteCount
0bbbbbbb	BB	ByteCount
0aaaaaaa	AA	Address High
0aaaaaaa	AA	Address Mid
0aaaaaaa	AA	Address Low
0ddddddd	DD	Data
|	|	
0ccccccc	CC	Check sum
11110111	F7	End of Exclusive

For more information on Address and Byte Count, refer to < Table 1-2 > ~ < Table 1-10 >.
The Check Sum value is set such that the sum of Byte Count, Address, Data, and Check Sum has value zero in its seven least significant bits.
If the top of the block is appointed to the Address the XG Bulk Dump, Bulk Request will be received.
The Block is a unit that consists of the data, arranged in the list, as the Total Size.

The following Bulk Dumps are handled.

XG System Data
Multi Effect 1 Data(Individual effect unit)
Multi EQ Data
Multi Effect 2 Data
Special Effect Data
Multi Part Data(Individual part unit)
A/D Part Data
Drums Setup Data(Individual note unit)
System Information(Transmit only)

3-6-3-3 XG PARAMETER REQUEST (Receive only)

binary	hexadecimal	
11110000	F0	Exclusive status
01000011	43	YAMAHA ID
0011nnnn	3n	Device Number
01001100	4C	Model ID
0aaaaaaa	AA	Address High
0aaaaaaa	AA	Address Mid
0aaaaaaa	AA	Address Low
11110111	F7	End of Exclusive

For more information on Address and Byte Count refer to < Table 1-2 > and < Table 1-4 > ~ < Table 1-10 >.

The following Parameter Requests are handled.

XG System Data
Multi Effect 1 Data
Multi EQ Data
Multi Effect 2 Data
Special Effect Data
Multi Part Data
A/D Part Data
Drums Setup Data

3-6-3-4 XG DUMP REQUEST (Receive only)

binary	hexadecimal	
11110000	F0	Exclusive status
01000011	43	YAMAHA ID
0010nnnn	2n	Device Number
01001100	4C	Model ID
0aaaaaaa	AA	Address High
0aaaaaaa	AA	Address Mid
0aaaaaaa	AA	Address Low
11110111	F7	End of Exclusive

For more information on Address and Byte Count refer to < Table 1-2 > ~ < Table 1-10 >.

The following Dump Requests are handled.

XG System Data
Multi Effect 1 Data(Individual module unit)
Multi EQ Data
Multi Effect 2 Data
Special Effect Data
Multi Part Data(Individual part unit)
A/D Part Data
Drums Setup Data(Individual note unit)
System Information

3-6-4 CLAVINOVA MIDI COMPLIANCE

3-6-4-1 INTERNAL CLOCK / EXTERNAL CLOCK (Receive only)

binary	hexadecimal	
11110000	F0	Exclusive status
01000011	43	YAMAHA ID
01110011	73	Clavinova ID
00000001	01	Clavinova common ID
0000001n	0N	N: 2(Internal Clock),3(External Clock)
11110111	F7	End of Exclusive

3-6-4-2 BULK DUMP ORGAN FLUTE DATA

binary	hexadecimal	
11110000	F0	Exclusive status
01000011	43	YAMAHA
01110011	73	CLAVINOVA ID
00000001	01	Model ID (Clavinova common ID)
00000110	06	Bulk ID
00001011	0B	Bulk No.(ORGAN FLUTE Bulk Dump DATA)
0000nnnn	0n	Data Length
0000nnnn	0n	Data Length
0000nnnn	0n	Data Length
0000nnnn	0n	Data Length (Data Length=nnnnH bytes)
0ddddddd	dd1	Bulk Data
	:	:
0ccccccc	cc	don’t care
11110111	F7	End of Exclusive

Data Length = 16Hbytes
[BULK DATA items dd1...dd22]

1st	0nH	n: MIDI Channel No.		Discription
2nd	Drawber	[1']	00 - 07H	0: -∞ [dB]
3rd		[1 1/3']	00 - 07H	1: -12 [dB]
4th		don’t care	00H	2: -9 [dB]
5th		[2']	00 - 07H	3: -6 [dB]
6th		[2 2/3']	00 - 07H	4: -4.5 [dB]
7th		[4']	00 - 07H	5: -3 [dB]
8th		[5 1/3']	00 - 07H	6: -1.5 [dB]
9th		[8']	00 - 07H	7: 0 [dB]
10th		[16']	00 - 07H	
11th		[Attack 2']	00 - 07H	
12th		[Attack 2 2/3']	00 - 07H	
13th		[Attack 4']	00 - 07H	
14th	Settings	[Attack Length]	00 - 07H	
15th		[Response]	00 - 07H	
16th		[Attack Mode]	00 - 01H	00H:Each, 01H:First
17th		don’t care	00H	
18th		don’t care	00H	
19th		don’t care	00H	
20th		don’t care	00H	
21th		don’t care	00H	
22th		don’t care	00H	

3-6-4-3 DOC MULTI TIMBRE ON / OFF (Receive only)

binary	hexadecimal	
11110000	F0	Exclusive status
01000011	43	YAMAHA ID
01110011	73	Clavinova ID
00000001	01	Clavinova commmon ID
00000110	1N	N:3(DOC Multi Timbre Off),4(DOC Multi Timbre On)
11110111	F7	End of Exclusive

3-6-4-4 PANEL LED ON / OFF (Receive only)

binary	hexadecimal	
11110000	F0	Exclusive status
01000011	43	YAMAHA ID
01110011	73	Clavinova ID
00000001	01	Clavinova commmon ID
00011010	1A	PANEL LED On/Off
0mmmmmmm	MM	MM:00H(LED Off),01H(LED On),02H(The LED flashes) 03H (LED All off), 04H (Panel LED returns to normal operation)
00000000	00	
0nnnnnnn	NN	LED No.
11110111	F7	End of Exclusive

Remotely switches the Panel LED On/Off.

3-6-4-5 PANEL VOICE SETTING (Receive only)

binary	hexadecimal	
11110000	F0	Exclusive status
01000011	43	YAMAHA ID
01110011	73	Clavinova ID
01000101	01	Clavinova common ID
00100010	22	Piano Live Exclusive Substatus
00000000	00	Panel Voice Setting Substatus
0000nnnn	0n	Panel Part No. 00H (RIGHT 1) 01H (RIGHT 2) 02H (LEFT)
0mmmmmmm	mm	Bank Select MSB
0lllllll	ll	Bank Select LSB
0ppppppp	pp	Program Change
11110111	F7	End of Exclusive

3-6-4-6 PANEL VOICE VOLUME SETTING (Receive only)

binary	hexadecimal	
11110000	F0	Exclusive status
01000011	43	YAMAHA ID
01110011	73	Clavinova ID
01000101	01	Clavinova common ID
00100010	22	Piano Live Exclusive Substatus
00000001	01	Panel Voice Volume Setting Substatus
0000nnnn	0n	Panel Part No. 00H (RIGHT 1) 01H (RIGHT 2) 02H (LEFT)
0vvvvvvv	vv	Value (0 - 7FH)
11110111	F7	End of Exclusive

3-6-4-7 PANEL VOICE REVERB DEPTH SETTING (Receive only)

binary	hexadecimal	
11110000	F0	Exclusive status
01000011	43	YAMAHA ID
01110011	73	Clavinova ID
01000101	01	Clavinova common ID
00100010	22	Piano Live Exclusive Substatus
00000010	02	Panel Voice Reverb Depth Setting Substatus
0000nnnn	0n	Panel Part No. 00H (RIGHT 1) 01H (RIGHT 2) 02H (LEFT)
0vvvvvvv	vv	Value (0 - 7FH)
11110111	F7	End of Exclusive

3-6-4-8 PANEL VOICE EFFECT DEPTH SETTING (Receive only)

binary	hexadecimal	
11110000	F0	Exclusive status
01000011	43	YAMAHA ID
01110011	73	Clavinova ID
01000101	01	Clavinova common ID
00100010	22	Piano Live Exclusive Substatus
00000011	03	Panel Voice Effect Depth Setting Substatus
0000nnnn	0n	Panel Part No. 00H (RIGHT 1) 01H (RIGHT 2) 02H (LEFT)
0vvvvvvv	vv	Value (0 - 7FH)
11110111	F7	End of Exclusive

3-6-4-9 MIDI FA CANCEL (Receive only)

binary	hexadecimal	
11110000	F0	Exclusive status
01000011	43	YAMAHA ID
01110011	73	Clavinova ID
01000101	01	Clavinova common ID
01100001	61	MIDI FA Cancel
11110111	F7	End of Exclusive

If this message is received, even if FAH is received the Rhythm will not start.

3-6-5 SPECIAL OPERATORS

3-6-5-1 SPLIT POINT

binary	hexadecimal	
11110000	F0	Exclusive status
01000011	43	YAMAHA ID
01110011	73	Clavinova ID
01000101	01	Clavinova common ID
00010001	11	Sub ID
00000000	00	
00010100	14	Split Point
0ddddddd	DD	Split Key No.
11110111	F7	End of Exclusive

3-6-5-2 STYLE NUMBER

binary	hexadecimal	
11110000	F0	Exclusive status
01000011	43	YAMAHA ID
01110011	73	Clavinova ID
01011010	5E	CVP-107/109/700 ID
00010001	11	Sub ID
00000000	00	Channel No. (always 00)
00010110	16	Style No. Control No.
0mmmmmmm	mm	Style No. MSB
0lllllll	ll	Style No. LSB
11110111	F7	End of Exclusive

3-6-5-3 FINGERING

binary	hexadecimal	
11110000	F0	Exclusive status
01000011	43	YAMAHA ID
01110011	73	Clavinova ID
01000101	01	Clavinova common ID
00010001	11	Sub ID
00000000	00	
01000000	40	Fingering
0000dddd	0D	0D: 00H(Off),01H(Single Finger), 02H(Fingered 1),03H(Fingered 2), 04H(Full Keyboard),07H(Multi Finger)
11110111	F7	End of Exclusive

3-6-5-4 ACCOMP VOLUME

bbinary	hexadecimal	
11110000	F0	Exclusive status
01000011	43	YAMAHA ID
01110011	73	Clavinova ID
01000101	01	Clavinova common ID
00010001	11	Sub ID
0000nnnn	0N	Part: 00H(All Part),05H(Rhythm),0AH(Bass), 06H(Chord),0DH(Pad),07H(Phrase)
01000000	42	Accomp Volume
0ddddddd	DD	Volume Data: 00H~7FH
11110111	F7	End of Exclusive

3-6-5-5 CHANNEL DETUNE

binary	hexadecimal	
11110000	F0	Exclusive status
01000011	43	YAMAHA ID
01110011	73	Clavinova ID
01000101	01	Clavinova common ID
00010001	11	Sub ID
0000nnnn	0N	N = MIDI Channel
01000011	43	Dual Detune
0vvvvvvv	VV	Value VV: 00H - 40H - 7FH (-64 - 0 - +63)
11110111	F7	End of Exclusive

The Channel Detune message only affects the specified channel.

3-6-5-6 VOLUME ,EXPRESSION AND PAN REALTIME CONTROL OFF

binary	hexadecimal	
11110000	F0	Exclusive status
01000011	43	YAMAHA ID
01110011	73	Clavinova ID
01000101	01	Clavinova common ID
00010001	11	Sub ID
0000nnnn	0N	N = MIDI Channel
01001001	45	Volume and Expression Realtime Control Off
0vvvvvvv	VV	Value VV: off=7FH, on=00H
11110111	F7	End of Exclusive

When “On” is received, subsequent volume, expression, and PAN changes are only valid after the reception of the next key on. Normal operation resumes when “Off” is received.

3-6-5-7 MIDI KEY LED MODE ON / OFF (Receive only)

binary	hexadecimal	
11110000	F0	Exclusive status
01000011	43	YAMAHA ID
01110011	73	Clavinova ID
01000101	01	Clavinova common ID
00010001	11	Sub ID
0000nnnn	0N	N = MIDI Channel
01000111	47	MIDI Key LED Mode On / Off
0ddddddd	DD	DD: 00H(Key LED Mode Off), 01H(Key LED Mode On + no tone), 02H(Key LED Mode On + tone)
11110111	F7	End of Exclusive

3-6-5-8 NATURAL REVERB TYPE (CVP-109)

binary	hexadecimal	
11110000	F0	Exclusive status
01000011	43	YAMAHA ID
01110011	73	Clavinova ID
01011001	5D	CVP-109 ID
00010001	11	Sub ID
00000000	00	Channel No. (always 00)
01010010	52	Natural Reverb Control No.
00000000	00	Natural Reverb Type Parameter No.
0mmmmmmm	mm	Natural Reverb Type MSB
0lllllll	ll	Natural Reverb Type LSB
11110111	F7	End of Exclusive

3-6-5-9 NATURAL REVERB TRACK ON/OFF (CVP-109)

binary	hexadecimal	
11110000	F0	Exclusive status
01000011	43	YAMAHA ID
01110011	73	Clavinova ID
01011001	5D	CVP-109 ID
00010001	11	Sub ID
0000nnnn	0n	Channel No. (00H - 0FH) 00H - 0FH (MIDI Channel 1 - 16)
01010011	53	Natural Reverb Track On/Off Control No.
0ddddddd	dd	Natural Reverb Track On/Off dd Natural Rev. XG Rev. 0 Off On (default) 1 Off Off 2 On On 3 On Off
11110111	F7	End of Exclusive

3-6-5-10 VOCAL HARMONY PITCH TO NOTE (Receive only)

binary	hexadecimal	
11110000	F0	Exclusive status
01000011	43	YAMAHA ID
01110011	73	Clavinova ID
01000101	01	Clavinova common ID
00010001	11	Sub ID
00000000	00	Channel No. (always 00)
01010000	50	Vocal Harmony Additional Parameter Control No.
00000000	00	Pitch to Note Parameter No.
0sssssss	ss	Pitch to Note Switch 00H (Off) 01H (On)
11110111	F7	End of Exclusive

3-6-5-11 VOCAL HARMONY PITCH TO NOTE PART (Receive only)

11110000	F0	Exclusive status
01000011	43	YAMAHA ID
01110011	73	Clavinova ID
01000101	01	Clavinova common ID
00010001	11	Sub ID
00000000	00	Channel No. (always 00)
01010000	50	Vocal Harmony Additional Parameter Control No.
00000001	01	Pitch to Note Part Parameter No.
0sssssss	ss	Pitch to Note Part No. 00H (RIGHT 1) 01H (RIGHT 2) 02H (LEFT)
11110111	F7	End of Exclusive

3-6-5-12 VOCAL HARMONY VOCODER PART (Harmony Part [Panel]) (Receive only)

binary	hexadecimal	
11110000	F0	Exclusive status
01000011	43	YAMAHA ID
01110011	73	Clavinova ID
01000101	01	Clavinova common ID
00010001	11	Sub ID
00000000	00	Channel No. (always 00)
01010000	50	Vocal Harmony Additional Parameter Control No.
00010000	10	Vocoder Part Parameter No.
0sssssss	ss	Harmony Part No. 00H (Off) 01H (RIGHT 1) 02H (LEFT)
11110111	F7	End of Exclusive

3-6-6 Others

3-6-6-1 MIDI MASTER TUNING (Receive only)

binary	hexadecimal	
11110000	F0	Exclusive status
01000011	43	YAMAHA ID
0001nnnn	1N	When N is received N=0-F, whichever is received.
00100111	27	Model ID
00110000	30	Sub ID
00000000	00	
00000000	00	
0mmmmmmm	MM	Master Tune MSB
0lllllll	LL	Master Tune LSB
0ccccccc	CC	don't care
11110111	F7	End of Exclusive

Changes tuning of all channels.
MM, LL values are used to define the MIDI Master Tuning value.

T = M – 128

T: Tuning value (-99 cents to +99 cents)
M:A single byte value (28–228) that consists of bits 0–3 of MM as MSB, bits 0–3 of LL as LSB.

This setting is not reset when the GM System or XG System is turned on.

< Table 1-1>

Parameter Basic Address

	Parameter Change Address (H)	(M)	(L)	Description
SYSTEM	00	00	00	System
	00	00	7D	Drum Setup Reset
	00	00	7E	XG System On
	00	00	7F	All Parameter Reset
INFORMATION	01	00	00	System Information
EFFECT 1	02	01	00	Effect1(Reverb,Chorus,Variation)
MULTI EQ	02	40	00	Multi EQ
EFFECT 2	03	00	00	Effect2 (Insertion Effect1)
:	:	:		
	03	02	00	(Insertion Effect3)
SPECIAL EFFECT	04	00	00	Special Insertion Effect1
MULTI PART	08	00	00	Multi Part 1
		:		
	08	0F	00	Multi Part 16
A/D	10	00	00	A/D Part 1
DRUM	30	0D	00	Drum Setup 1 → Address / Parameter
	31	0D	00	Drum Setup 2

Address			Parameter
3n	0D	00	note number 13
3n	0E	00	note number 14
:	:		
3n	5B	00	note number 91

< Table 1-2 >

MIDI Parameter Change table (SYSTEM)

Address (H)			Size (H)	Data (H)	Parameter Name	Description	Default Value(H)
00	00	00	4	0000	Master Tune	-102.4..+102.3[cent]	00 04 00 00
		01		..07FF		1stbit3-0 -> bit15-12	(0400)
		02				2ndbit3-0 -> bit11-8	
		03				3rdbit3-0 -> bit7-4	
						4thbit3-0 -> bit3-0	
		04	1	00..7F	Master Volume	0..127	7F
		05	1		Not Used		
		06	1	28..58	Transpose	-24..+24[semitones]	40
		7D		n	Drum Setup Reset	n=Drum Setup Number	
		7E		00	XG System On	00=XG Sytem on	
		7F		00	All Parameter Reset	00=on (receive only)	
TOTAL SIZE			6				

< Table 1-3 >

MIDI Parameter table (System information)

Address (H)			Size (H)	Data (H)	Parameter Name	Description
01	00	00	E	20..7F	Model Name	32..127(ASCII)
		:				
		0D				
		0E	1	00		
		0F	1	01		
TOTAL SIZE			10			

(Transmitted by Dump Request. Not received. Bulk Dump Only)

< Table 1-4 >

MIDI Parameter Change table (EFFECT 1)

Address (H)			Size (H)	Data (H)	Parameter Name	Description	Default Value(H)
02	01	00	2	00..7F	Reverb Type MSB	Refer to the Effect Type List	01(=HALL1)
				00..7F	Reverb Type LSB	00 : basic type	00
		02	1	00..7F	Reverb Parameter 1	Refer to the Ef. Parameter List	Depend on Reverb type
		03	1	00..7F	Reverb Parameter 2	Refer to the Ef. Parameter List	Depend on Reverb type
		04	1	00..7F	Reverb Parameter 3	Refer to the Ef. Parameter List	Depend on Reverb type
		05	1	00..7F	Reverb Parameter 4	Refer to the Ef. Parameter List	Depend on Reverb type
		06	1	00..7F	Reverb Parameter 5	Refer to the Ef. Parameter List	Depend on Reverb type
		07	1	00..7F	Reverb Parameter 6	Refer to the Ef. Parameter List	Depend on Reverb type
		08	1	00..7F	Reverb Parameter 7	Refer to the Ef. Parameter List	Depend on Reverb type
		09	1	00..7F	Reverb Parameter 8	Refer to the Ef. Parameter List	Depend on Reverb type
		0A	1	00..7F	Reverb Parameter 9	Refer to the Ef. Parameter List	Depend on Reverb type
		0B	1	00..7F	Reverb Parameter 10	Refer to the Ef. Parameter List	Depend on Reverb type
		0C	1	00..7F	Reverb Return	-∞..0..+6dB(0..96..127)	40
		0D	1	01..7F	Reverb Pan	L63..C..R63(1..64..127)	40
TOTAL SIZE			0E				

02	01	10	1	00..7F	Reverb Parameter 11	Refer to the Ef. Parameter List	Depend on Reverb type
		11	1	00..7F	Reverb Parameter 12	Refer to the Ef. Parameter List	Depend on Reverb type
		12	1	00..7F	Reverb Parameter 13	Refer to the Ef. Parameter List	Depend on Reverb type
		13	1	00..7F	Reverb Parameter 14	Refer to the Ef. Parameter List	Depend on Reverb type
		14	1	00..7F	Reverb Parameter 15	Refer to the Ef. Parameter List	Depend on Reverb type
		15	1	00..7F	Reverb Parameter 16	Refer to the Ef. Parameter List	Depend on Reverb type
TOTAL SIZE			6				
02	01	20	2	00..7F	Chorus Type MSB	Refer to the Effect Type List	41(=Chorus1)
				00..7F	Chorus Type LSB	00 : basic type	00
		22	1	00..7F	Chorus Parameter 1	Refer to the Ef. Parameter List	Depend on Chorus Type
		23	1	00..7F	Chorus Parameter 2	Refer to the Ef. Parameter List	Depend on Chorus Type
		24	1	00..7F	Chorus Parameter 3	Refer to the Ef. Parameter List	Depend on Chorus Type
		25	1	00..7F	Chorus Parameter 4	Refer to the Ef. Parameter List	Depend on Chorus Type
		26	1	00..7F	Chorus Parameter 5	Refer to the Ef. Parameter List	Depend on Chorus Type
		27	1	00..7F	Chorus Parameter 6	Refer to the Ef. Parameter List	Depend on Chorus Type
		28	1	00..7F	Chorus Parameter 7	Refer to the Ef. Parameter List	Depend on Chorus Type
		29	1	00..7F	Chorus Parameter 8	Refer to the Ef. Parameter List	Depend on Chorus Type
		2A	1	00..7F	Chorus Parameter 9	Refer to the Ef. Parameter List	Depend on Chorus Type
		2B	1	00..7F	Chorus Parameter 10	Refer to the Ef. Parameter List	Depend on Chorus Type
		2C	1	00..7F	Chorus Return	-∞..0..+6dB(0..96..127)	40
		2D	1	01..7F	Chorus Pan	L63..C..R63(1..64..127)	40
		2E	1	00..7F	Send Chorus To Reverb	-∞..0..+6dB(0..96..127)	00
TOTAL SIZE			0F				
02	01	30	1	00..7F	Chorus Parameter 11	Refer to the Ef. Parameter List	Depend on Chorus Type
		31	1	00..7F	Chorus Parameter 12	Refer to the Ef. Parameter List	Depend on Chorus Type
		32	1	00..7F	Chorus Parameter 13	Refer to the Ef. Parameter List	Depend on Chorus Type
		33	1	00..7F	Chorus Parameter 14	Refer to the Ef. Parameter List	Depend on Chorus Type
		34	1	00..7F	Chorus Parameter 15	Refer to the Ef. Parameter List	Depend on Chorus Type
		35	1	00..7F	Chorus Parameter 16	Refer to the Ef. Parameter List	Depend on Chorus Type
TOTAL SIZE			6				
02	01	40	2	00..7F	Variation Type MSB	Refer to the Effect Type List	“05(=DELAY L,C,R)”
				00..7F	Variation Type LSB	00 : basic type	00
		42	2	00..7F	Vari. Param. 1 MSB	Refer to the Ef. Parameter List	Depend on Vari. Type
				00..7F	Vari. Param. 1 LSB	Refer to the Ef. Parameter List	Depend on Vari. Type
		44	2	00..7F	Vari. Param. 2 MSB	Refer to the Ef. Parameter List	Depend on Vari. Type
				00..7F	Vari. Param. 2 LSB	Refer to the Ef. Parameter List	Depend on Vari. Type
		46	2	00..7F	Vari. Param. 3 MSB	Refer to the Ef. Parameter List	Depend on Vari. Type
				00..7F	Vari. Param. 3 LSB	Refer to the Ef. Parameter List	Depend on Vari. Type
		48	2	00..7F	Vari. Param. 4 MSB	Refer to the Ef. Parameter List	Depend on Vari. Type
				00..7F	Vari. Param. 4 LSB	Refer to the Ef. Parameter List	Depend on Vari. Type
		4A	2	00..7F	Vari. Param. 5 MSB	Refer to the Ef. Parameter List	Depend on Vari. Type
				00..7F	Vari. Param. 5 LSB	Refer to the Ef. Parameter List	Depend on Vari. Type
		4C	2	00..7F	Vari. Param. 6 MSB	Refer to the Ef. Parameter List	Depend on Vari. Type
				00..7F	Vari. Param. 6 LSB	Refer to the Ef. Parameter List	Depend on Vari. Type
		4E	2	00..7F	Vari. Param. 7 MSB	Refer to the Ef. Parameter List	Depend on Vari. Type
				00..7F	Vari. Param. 7 LSB	Refer to the Ef. Parameter List	Depend on Vari. Type
		50	2	00..7F	Vari. Param. 8 MSB	Refer to the Ef. Parameter List	Depend on Vari. Type
				00..7F	Vari. Param. 8 LSB	Refer to the Ef. Parameter List	Depend on Vari. Type
		52	2	00..7F	Vari. Param. 9 MSB	Refer to the Ef. Parameter List	Depend on Vari. Type
				00..7F	Vari. Param. 9 LSB	Refer to the Ef. Parameter List	Depend on Vari. Type
		54	2	00..7F	Vari. Param. 10 MSB	Refer to the Ef. Parameter List	Depend on Vari. Type
				00..7F	Vari. Param. 10 LSB	Refer to the Ef. Parameter List	Depend on Vari. Type
		56	1	00..7F	Variation Return	-∞..0..+6dB(0..96..127)	40
		57	1	01..7F	Variation Pan	L63..C..R63(1..64..127)	40
		58	1	00..7F	Send Vari. To Reverb	-∞..0..+6dB(0..96..127)	00
		59	1	00..7F	Send Vari. To Chorus	-∞..0..+6dB(0..96..127)	00
		5A	1	00..01	Variation Connection	0:insertion,1:system	00
		5B	1	00..1F	Variation Part	part1..32(0..31),off(127)	7F
		5C	1	01..7F	MW Vari. Ctrl Depth	-63..+63	40
		5D	1	01..7F	PB Vari. Ctrl Depth	-63..+63	40
		5E	1	01..7F	CAT Vari. Ctrl Depth	-63..+63	40
		5F	1	01..7F	Not Used		
		60	1	01..7F	Not Used		
TOTAL SIZE			21				
02	01	70	1	00..7F	Variation Parameter 11	option Parameter	Depend on Variation Type
		71	1	00..7F	Variation Parameter 12	option Parameter	Depend on Variation Type
		72	1	00..7F	Variation Parameter 13	option Parameter	Depend on Variation Type
		73	1	00..7F	Variation Parameter 14	option Parameter	Depend on Variation Type
		74	1	00..7F	Variation Parameter 15	option Parameter	Depend on Variation Type
		75	1	00..7F	Variation Parameter 16	option Parameter	Depend on Variation Type
TOTAL SIZE			6				

< Table 1-5 >

MIDI Parameter Change table (MULTI EQ)

Address (H)			Size (H)	Data (H)	Parameter Name	Description	Default Value(H)
02	40	00	1	34..4C	EQ Type	0:FLAT 1:JAZZ 2:POPS 3:ROCK 4:CLASSIC	0
		01	1	34..4C	EQ Gain1	-12..+12[dB]	40
		02	1	04..28	EQ Frequency1	32..2000[Hz]	0C
		03	1	01..78	EQ Q1	0.1..12.0	07
		04	1	00..01	EQ Shape1	00:Shelving,01:Peaking	00
		05	1	34..4C	EQ Gain2	-12..+12[dB]	40
		06	1	0E..36	EQ Frequency2	0.1..10[KHz]	1C
		07	1	01..78	EQ Q2	0.1..12.0	07
		08	1		Not Used		

	09	1	34..4C	EQ Gain3	-12..+12[dB]	40
	0A	1	0E..36	EQ Frequency3	0.1..10[KHz]	22
	0B	1	01..78	EQ Q3	0.1..12.0	07
	0C	1		Not Used		
	0D	1	34..4C	EQ Gain4	-12..+12[dB]	40
	0E	1	0E..36	EQ Frequency4	0.1..10[KHz]	2E
	0F	1	01..78	EQ Q4	0.1..12.0	07
	10	1		Not Used		
	11	1	34..4C	EQ Gain5	-12..+12[dB]	40
	12	1	1C..3A	EQ Frequency5	0.5..16.0[KHz]	34
	13	1	01..78	EQ Q5	0.1..12.0	07
	14	1	00..01	EQ Shape5	00:Shelving,01:Peaking	00
TOTAL SIZE		15				

< Table 1-6 >

MIDI Parameter Change table (EFFECT 2)

Address (H)			Size (H)	Data (H)	Parameter Name	Description	Default
03	0n	00	2	00..7F	Insertion Type MSB	Refer to the Ef. Type List	
				00..7F	Insertion Type LSB	00 : basic type	
		02	1	00..7F	Insertion Parameter1	Refer to the Ef. Parameter List	
		03	1	00..7F	Insertion Parameter2	Refer to the Ef. Parameter List	
		04	1	00..7F	Insertion Parameter3	Refer to the Ef. Parameter List	
		05	1	00..7F	Insertion Parameter4	Refer to the Ef. Parameter List	
		06	1	00..7F	Insertion Parameter5	Refer to the Ef. Parameter List	
		07	1	00..7F	Insertion Parameter6	Refer to the Ef. Parameter List	
		08	1	00..7F	Insertion Parameter7	Refer to the Ef. Parameter List	
		09	1	00..7F	Insertion Parameter8	Refer to the Ef. Parameter List	
		0A	1	00..7F	Insertion Parameter9	Refer to the Ef. Parameter List	
		0B	1	00..7F	Insertion Parameter10	Refer to the Ef. Parameter List	
		0C	1	00..7F	Insertion Part	Part1..16,OFF	
		0D	1	00..7F	MW INS CTRL DPT		
		0E	1	00..7F	BEND INS CTRL DPT		
		0F	1	00..7F	CAT INS CTRL DPT		
		10	1	00..7F	Not Used		
		11	1	00..7F	Not Used		
TOTAL SIZE			12				
03	0n	20	1	00..7F	Insertion Parameter11	Refer to the Ef. Parameter List	
		21	1	00..7F	Insertion Parameter12	Refer to the Ef. Parameter List	
		22	1	00..7F	Insertion Parameter13	Refer to the Ef. Parameter List	
		23	1	00..7F	Insertion Parameter14	Refer to the Ef. Parameter List	
		24	1	00..7F	Insertion Parameter15	Refer to the Ef. Parameter List	
		25	1	00..7F	Insertion Parameter16	Refer to the Ef. Parameter List	
TOTAL SIZE			06				
03	0n	30	2	00..7F	Ins. Param.1 MSB	Refer to the Ef. Parameter List	
				00..7F	Ins. Param.1 LSB	Refer to the Ef. Parameter List	
03	0n	32	2	00..7F	Ins. Param.2 MSB	Refer to the Ef. Parameter List	
				00..7F	Ins. Param.2 LSB	Refer to the Ef. Parameter List	
03	0n	34	2	00..7F	Ins. Param.3 MSB	Refer to the Ef. Parameter List	
				00..7F	Ins. Param.3 LSB	Refer to the Ef. Parameter List	
03	0n	36	2	00..7F	Ins. Param.4 MSB	Refer to the Ef. Parameter List	
				00..7F	Ins. Param.4 LSB	Refer to the Ef. Parameter List	
03	0n	38	2	00..7F	Ins. Param.5 MSB	Refer to the Ef. Parameter List	
				00..7F	Ins. Param.5 LSB	Refer to the Ef. Parameter List	
03	0n	3A	2	00..7F	Ins. Param.6 MSB	Refer to the Ef. Parameter List	
				00..7F	Ins. Param.6 LSB	Refer to the Ef. Parameter List	
03	0n	3C	2	00..7F	Ins. Param.7 MSB	Refer to the Ef. Parameter List	
				00..7F	Ins. Param.7 LSB	Refer to the Ef. Parameter List	
03	0n	3E	2	00..7F	Ins. Param.8 MSB	Refer to the Ef. Parameter List	
				00..7F	Ins. Param.8 LSB	Refer to the Ef. Parameter List	
03	0n	40	2	00..7F	Ins. Param.9 MSB	Refer to the Ef. Parameter List	
				00..7F	Ins. Param.9 LSB	Refer to the Ef. Parameter List	
03	0n	42	2	00..7F	Ins. Param.10 MSB	Refer to the Ef. Parameter List	
				00..7F	Ins. Param.10 LSB	Refer to the Ef. Parameter List	
TOTAL SIZE 14							

For effect types that do not require MSB, the Parameters for Address 02-0B will be received. Address 30-42 will not be received.
For effect types that require MSB, the Parameters for Address 30-42 will be received. Address 02-0B will not be received.
When Bulk Dumps that include Effect Type data are transmitted, the Parameters for Address 02 - 0B will always be transmitted. But, effects that require MSB, when the bulk dump is received the Parameters for Address 02 - 0B will not be received.

n = Insertion Effect No. (0 - 2)

The INSERTION EFFECT Parameter cannot be reset to its factory settings with XG SYSTEM ON or XG ALL PARAMETER RESET, there is no default value.
When a Parameter Request or Bulk Request message is received, the currently set value is always transmitted.

< Table 1-7 >

MIDI PARAMETER CHANGE TABLE (SPECIAL EFFECT)

Address (H)			Size (H)	Data (H)	Parameter	Description	Default
04	00	00	2	00 - 7F	Insertion Effect Type MSB	Refer to the XG Effect Map	
				00 - 7F	Insertion Effect Type LSB	00 : basic type	
		02	1	00 - 7F	Insertion Effect Parameter1	Refer to the XG Ef. Parameter List	
		03	1	00 - 7F	Insertion Effect Parameter2	Refer to the XG Ef. Parameter List	
		04	1	00 - 7F	Insertion Effect Parameter3	Refer to the XG Ef. Parameter List	
		05	1	00 - 7F	Insertion Effect Parameter4	Refer to the XG Ef. Parameter List	
		06	1	00 - 7F	Insertion Effect Parameter5	Refer to the XG Ef. Parameter List	
		07	1	00 - 7F	Insertion Effect Parameter6	Refer to the XG Ef. Parameter List	

		08	1	00 - 7F	Insertion Effect Parameter7	Refer to the XG Ef. Parameter List	
		09	1	00 - 7F	Insertion Effect Parameter8	Refer to the XG Ef. Parameter List	
		0A	1	00 - 7F	Insertion Effect Parameter9	Refer to the XG Ef. Parameter List	
		0B	1	00 - 7F	Insertion Effect Parameter10	Refer to the XG Ef. Parameter List	
		0C	1	00 - 7F	Insertion Effect Part	Part1...16(0...15) AD1(64) OFF(16...63, 65...127)	
		0D	1	00 - 7F	MW Insertion Control Depth	Don't care	
		0E	1	00 - 7F	BEND Insertion Control Depth	Don't care	
		0F	1	00 - 7F	CAT Insertion Control Depth	Don't care	
		10	1	00 - 7F	AC1 Insertion Control Depth	Don't care	
		11	1	00 - 7F	AC2 Insertion Control Depth	Don't care	
TOTAL	SIZE	12					
04	00	14	1	00 - 7F	Unique Insertion Effect External Control CH1(Harmony Channel)	1...16(0...15), off(127)	
		15	1	00 - 7F	Unique Insertion Effect External Control CH2 (MELODY CHANNEL)	1...16(0...15), off(127)	
TOTAL	SIZE	2					
04	00	20	1	00 - 7F	Insertion Effect Parameter11	Refer to the XG Ef. Parameter List	
		21	1	00 - 7F	Insertion Effect Parameter12	Refer to the XG Ef. Parameter List	
		22	1	00 - 7F	Insertion Effect Parameter13	Refer to the XG Ef. Parameter List	
		23	1	00 - 7F	Insertion Effect Parameter14	Refer to the XG Ef. Parameter List	
		24	1	00 - 7F	Insertion Effect Parameter15	Refer to the XG Ef. Parameter List	
		25	1	00 - 7F	Insertion Effect Parameter16	Refer to the XG Ef. Parameter List	
TOTAL	SIZE	6					

Insertion Effect Type MSB: Assigns the Harmony Mode.
If the value is not a Harmony Mode value, the Harmony function will be OFF and the input signal will be transmitted as is.
Insertion Effect Type LSB: Assigns the Harmony Kit.
If the value is not an existing harmony kit value, don't care.
Harmony Channel: Harmony control channel.
Melody Channel: Melody play channel.
When both are received, the last message received will take priority.
For example, when the Melody Channel is 3 and the Harmony Channel 3 message is received, the Melody Channel will be OFF and the Harmony Channel will be 3.

Note) The SPECIAL EFFECT Parameter cannot be reset to its factory settings with XG SYSTEM ON or XG ALL PARAMETER RESET, there is no default value.
When a request message is received, the currently set value is always transmitted.

< Table 1-8 >

MIDI Parameter Change table (MULTI PART)

Address (H)			Size (H)	Data (H)	Parameter Name	Description	Default Value(H)
08	nn	00	1	00..20	Element Reserve	0..32	0(Part10),2(Others)
	nn	01	1	00..7F	Bank Select MSB	0..127	7F(Part10),00(Others)
	nn	02	1	00..7F	Bank Select LSB	0..127	00
	nn	03	1	00..7F	Program Number	1..128	00
	nn	04	1	00..0F, 7F	Rcv Channel	0..16;1..16,127;off	Part No.
	nn	05	1	00..01	Mono/Poly Mode	0:mono,1:poly	01
	nn	06	1	00..02	Same Note Number Key On Assign	0:single 1:multi 2:inst (for DRUM)	01
	nn	07	1	00..02	Part Mode	0:normal 1..3:drum thru,drum1..2	00 (Except Part10) 02 (Part10)
	nn	08	1	28..58	Note Shift	-24..+24[semitones]	40
	nn	09	2	00..FF	Detune	-12.8..+12.7[Hz]	08 00
	nn	0A				1st bit3..0 -> bit7..4 2nd bit3..0 -> bit3..0	(80)
	nn	0B	1	00..7F	Volume	0..127	64
	nn	0C	1	00..7F	Velocity Sense Depth	0..127	40
	nn	0D	1	00..7F	Velocity Sense Offset	0..127	40
	nn	0E	1	00..7F	Pan	0:random L63..C..R63(1..64..127)	40
	nn	0F	1	00..7F	Note Limit Low	C-2..G8	00
	nn	10	1	00..7F	Note Limit High	C-2..G8	7F
	nn	11	1	00..7F	Dry Level	0..127	7F
	nn	12	1	00..7F	Chorus Send	0..127	00
	nn	13	1	00..7F	Reverb Send	0..127	28
	nn	14	1	00..7F	Variation Send	0..127	00
	nn	15	1	00..7F	Vibrato Rate	-64..+63	40
	nn	16	1	00..7F	Vibrato Depth	-64..+63	40
	nn	17	1	00..7F	Vibrato Delay	-64..+63	40
	nn	18	1	00..7F	Filter Cutoff Freq.	-64..+63	40
	nn	19	1	00..7F	Filter Resonance	-64..+63	40
	nn	1A	1	00..7F	EG Attack Time	-64..+63	40
	nn	1B	1	00..7F	EG Decay Time	-64..+63	40
	nn	1C	1	00..7F	EG Release Time	-64..+63	40
	nn	1D	1	28..58	MW Pitch Control	-24..+24[semitones]	40
	nn	1E	1	00..7F	MW Filter Control	-9600..+9450[cent]	40
	nn	1F	1	00..7F	MW Amp. Control	-100..+100[%]	40
	nn	20	1	00..7F	MW LFO PMod Depth	0..127	0A
	nn	21	1	00..7F	MW LFO FMod Depth	0..127	00
	nn	22	1	00..7F	MW LFO AMod Depth	0..127	00
	nn	23	1	28..58	Bend Pitch Control	-24..+24[semitones]	42
	nn	24	1	00..7F	Bend Filter Control	-9600..+9450[cent]	40
	nn	25	1	00..7F	Bend Amp. Control	-100..+100[%]	40

	nn	26	1	00..7F	Bend LFO PMod Depth	0..127	00
	nn	27	1	00..7F	Bend LFO FMod Depth	0..127	00
	nn	28	1	00..7F	Bend LFO AMod Depth	0..127	00
TOTAL SIZE			29				
	nn	30	1		Not Used		
		:	:		:		
	nn	34	1		Not Used		
	nn	35	1	00..01	Rcv Note Message	OFF, ON	01
	nn	36	1		Not Used		
		:	:		:		
	nn	40	1		Not Used		
	nn	41	1	00..7F	Scale Tuning C	-64..+63[cent]	40
	nn	42	1	00..7F	Scale Tuning C#	-64..+63[cent]	40
	nn	43	1	00..7F	Scale Tuning D	-64..+63[cent]	40
	nn	44	1	00..7F	Scale Tuning D#	-64..+63[cent]	40
	nn	45	1	00..7F	Scale Tuning E	-64..+63[cent]	40
	nn	46	1	00..7F	Scale Tuning F	-64..+63[cent]	40
	nn	47	1	00..7F	Scale Tuning F#	-64..+63[cent]	40
	nn	48	1	00..7F	Scale Tuning G	-64..+63[cent]	40
	nn	49	1	00..7F	Scale Tuning G#	-64..+63[cent]	40
	nn	4A	1	00..7F	Scale Tuning A	-64..+63[cent]	40
	nn	4B	1	00..7F	Scale Tuning A#	-64..+63[cent]	40
	nn	4C	1	00..7F	Scale Tuning B	-64..+63[cent]	40
	nn	4D	1	28..58	CAT Pitch Control	-24..+24[semitones]	40
	nn	4E	1	00..7F	CAT Filter Control	-9600..+9450[cent]	40
	nn	4F	1	00..7F	CAT Amplitude Control	-100..+100[%]	40
	nn	50	1	00..7F	CAT LFO PMod Depth	0..127	00
	nn	51	1	00..7F	CAT LFO FMod Depth	0..127	00
	nn	52	1	00..7F	CAT LFO AMod Depth	0..127	00
	nn	53			Not Used		
		:			:		
		66			Not Used		
	nn	67	1	00..01	Portamento Switch	off/on	00
	nn	68	1	00..7F	Portamento Time	0..127	00
	nn	69			Not Used		
		:			:		
		6E			Not Used		
TOTAL SIZE			3F				
08	nn	70	1		Not Used	Don’t care	
	nn	71	1		Not Used	Don’t care	
	nn	72	1	00 - 7F	EQ Bass	-64 - +63(-12 - +12[dB])	40
	nn	73	1	00 - 7F	EQ Treble	-64 - +63(-12 - +12[dB])	40
TOTAL SIZE			04				
08	nn	74	1		Not Used	Don’t care	
		75	1		Not Used	Don’t care	
		76	1	04 - 28	EQ Bass frequency	32-2.0k[Hz]	0C
		77	1	1C - 3A	EQ Treble frequency	500-16.0k[Hz]	36
		78	1		Not Used	Don’t care	
		79	1		Not Used	Don’t care	
		7A	1		Not Used	Don’t care	
		7B	1		Not Used	Don’t care	
		7C	1		Not Used	Don’t care	
		7D	1		Not Used	Don’t care	
		7E	1		Not Used	Don’t care	
		7F	1		Not Used	Don’t care	
TOTAL SIZE			0C				

nn = PartNumber

If there is a Drum Voice assigned to the Part, the following parameters are ineffective.

- Bank Select LSB
- Amp EG
- Portamento
- Soft Pedal
- Mono/Poly
- Scale Tuning

<Table 1-9 >

MIDI Parameter Change Table (A/D Part)

AAddress (H)		Size (H)	Data (H)	Parameter	Description	Default value(H)
10	nn	0	1	00 - 01	Input Gain	Don’t care	
		1	1	00 - 7F	Bank Select MSB	Don’t care	
		2	1	00 - 7F	Bank Select LSB	Don’t care	
		3	1	00 - 7F	Program Nummber	Don’t care	
		4	1	00 - 1F, 7F	Rcv Channel	A1 - A16, OFF	
		5	1		Not Used		
		6	1		Not Used		
		7	1		Not Used		
		8	1		Not Used		
		9	1		Not Used		
		0A	1		Not Used		
		0B	1	00 - 7F	Volume	0 - 127	
		0C	1		Not Used		

	0D	1		Not Used	
	0E	1	01 - 7F	Pan	L63...C...R63(1...64...127)
	0F	1		N.ot Used	
	10	1		Not Used	
	11	1	00 - 7F	Dry Level	0 - 127
	12	1	00 - 7F	Chorus Send	0 - 127
	13	1	00 - 7F	Reverb Send	0 - 127
	14	1	00 - 7F	Variation Send	0 - 127
TOTAL SIZE		15			

nn:A/D Part number (fixed 00)

Note) The A/D PART Parameter cannot be reset to its factory settings with XG SYSTEM ON or XG ALL PARAMETER RESET, there is no default value.
When a request message is received, the currently set value is always transmitted.

<Table 1-10 >

MIDI Parameter Change table (DRUM SETUP)

Address (H)			Size (H)	Data (H)	Parameter Name	Description	Default Value(H)
3n	rr	00	1	00..7F	Pitch Coarse	-64..+63	40
3n	rr	01	1	00..7F	Pitch Fine	-64..+63[cent]	40
3n	rr	02	1	00..7F	Level	0..127	Depend on the Note
3n	rr	03	1	00..7F	Alternate Group	0:off,1..127	Depend on the Note
3n	rr	04	1	00..7F	Pan	0:random L63..C..R63(1..64..127)	Depend on the Note
3n	rr	05	1	00..7F	Reverb Send Level	0..127	Depend on the Note
3n	rr	06	1	00..7F	Chorus Send Level	0..127	Depend on the Note
3n	rr	07	1	00..7F	Variation Send Level	0..127	7F
3n	rr	08	1	00..01	Key Assign	0:single,1:multi	00
3n	rr	09	1	00..01	Rcv Note Off	off/on	Depend on the Note
3n	rr	0A	1	00..01	Rcv Note On	off/on	01
3n	rr	0B	1	00..7F	Filter Cutoff Freq.	-64..63	40
3n	rr	0C	1	00..7F	Filter Resonance	-64..63	40
3n	rr	0D	1	00..7F	EG Attack Rate	-64..63	40
3n	rr	0E	1	00..7F	EG Decay1 Rate	-64..63	40
3n	rr	0F	1	00..7F	EG Decay2 Rate	-64..63	40
TOTAL SIZE			10				

n:Drum Setup Number(0 - 1)
rr:note number(0DH - 5BH)

If XG SYSTEM ON and/or GM SYSTEM ON message is received, all Drum Setup Parameter will be reset to default values.
According to the Drum Setup Reset message, individual Drum Setup Parameters can be reset to default values.

<Table 1-11 > Effect Map

If the received value does not contain an effect type in the TYPE LSB, the LSB will be directed to TYPE 0.
The panel effects are marked by "*".

REVERB TYPE

TYPE MSB		TYPE LSB													
DEC	HEX	00	01	02	03	...	07	08	...	16	17	18	19	20
000	0	NO EFFECT												
001	1	*HALL1	HALL2							*HALL2	*HALL3	*HALL4		
002	2	ROOM1	ROOM2	ROOM3						*ROOM1	*ROOM2	*ROOM3	*ROOM4	
003	3	STAGE1	STAGE2							*STAGE1	*STAGE2			
004	4	PLATE								*PLATE1	*PLATE2			
005	5	NO EFFECT												
:	:	:												
015	F	NO EFFECT												
016	10	WHITE ROOM												
017	11	TUNNEL												
018	12	CANYON												
019	13	BASEMENT												
020	14	NO EFFECT												
:	:	:												
127	7F	NO EFFECT												

CHORUS TYPE

TYPE MSB		TYPE LSB												
DEC	HEX	00	01	02	03	...	07	08	...	16	17	18	19	20
000	0	NO EFFECT												
001	1	NO EFFECT												
:	:	:												
064	40	NO EFFECT												
065	41	CHORUS1	CHORUS2	*CHORUS5				CHORUS4						
066	42	CELESTE1	*CHORUS4	CELESTE3				*CHORUS2		*CHORUS3	*CHORUS1			
067	43	FLANGER 1	*FLANGER 4					*FLANGER1		*FLANGER2	*FLANGER3			
068	44	SYMPHONIC								Symphonic				
069	45	NO EFFECT												
:	:	:												
071	47	NO EFFECT												
072	48	PHASER 1												
073	49	NO EFFECT												
:	:	:												
086	56	NO EFFECT												
087	57	ENSEMBLE DETUNE												
088	58	DETUNE												
:	:	NO EFFECT												
127	7F	:												

VARIATION TYPE(0 – 63)

TYPE MSB		TYPE LSB												
DEC	HEX	00	01	02	03	...	07	08	...	16	17	18	19	20
000	0	NO EFFECT												
001	1	HALL	HALL2							HALL	HALL	HALL		
002	2	ROOM1	ROOM2	ROOM3						ROOM	ROOM	ROOM	ROOM	
003	3	STAGE1	STAGE2							STAGE	STAGE			
004	4	PLATE								PLATE	PLATE			
005	5	DELAY L,C,R								DELAY LCR				
006	6	DELAY LR												
007	7	ECHO												
008	8	CROSS DELAY												
009	9	EARLY REF1	EARLY REF											
010	A	GATE REVERB												
011	B	REVERSE GATE												
012	C	NO EFFECT or THRU												
:	:	:												
015	F	NO EFFECT or THRU												
016	10	WHITE ROOM												
017	11	TUNNEL												
018	12	CANYON												
019	13	BASEMENT												
020	14	KARAOKE 1	KARAOKE 2	KARAOKE 3										
021	15	NO EFFECT or THRU												
:	:	:												
063	3F	NO EFFECT or THRU												

VARIATION TYPE(64 – 127)

TYPE MSB		TYPE LSB												
DEC	HEX	00	01	02	03	...	07	08	...	16	17	18	19	20
064	40	THRU												
065	41	CHORUS1	CHORUS2	CHORUS				CHORUS4						
066	42	CELESTE1	CHORUS	CELESTE3				CHORUS		CHORUS	CHORUS	Rotary Sp		
067	43	FLANGER 1	FLANGER					FLANGER		FLANGER	FLANGER			
068	44	SYMPHONIC								SYMPHONI				
069	45	ROTARY SP.								ROTARY SP				
070	46	TREMOLO								TREMOLO	ROTARY SP			
071	47	AUTO PAN								AUTO PAN	ROTARY SP	ROTARY SP	TREMOLO	GTR TREMOLO
072	48	PHASER						PHASER 2						
073	49	DISTORTION	COMP+ DISTORTION											
074	4A	OVER DRIVE												
075	4B	AMP SIM.								DIST HARD	DIST SOFT			
076	4C	3BAND EQ								EQ DISCO	EQ TEL			
077	4D	2BAND EQ												
078	4E	AUTO WAH	AUTO WAH+ DIST	AUTO WAH+ OVERDRIVE						AUTO WAH				
079	4F	THRU												
080	50	PITCH CHANGE1	PITCH CHANGE2											
081	51	HARMONIC ENHANCER												
082	52	TOUCH WAH 1	TOUCH WAH+ DIST	TOUCH WAH+ OVERDRIVE				TOUCH WAH 2						
083	53	COMPRESSOR												
084	54	NOISE GATE												
085	55	VOICE CANCEL												
086	56	2WAY ROTARY SP												
087	57	ENSEMBLE DETUNE												
088	58	AMBIENCE												
089	59	THRU												
:	:													
092	5C	THRU												
093	5D	TALKING MODULATOR												
094	5E	LO-FI												
095	5F	DIST+DELAY	OVERDRIVE+ DELAY											
096	60	COMP+DIST+DELAY	COMP+ OVERDRIVE+ DELAY											
097	61	WAH+DIST+DELAY	WAH+ OVERDRIVE+ DELAY											
098	62	THRU												
:	:													
127	7F	THRU												

INSERTION TYPE

TYPE MSB		TYPE LSB												
DEC	HEX	00	01	02	03	...	07	08	...	16	17	18	19	20
000	0	THRU												
001	1	*HALL1	HALL 2											
002	2	ROOM 1	ROOM 2	ROOM 3						*HALL2	*HALL3	*HALL4		
003	3	STAGE 1	STAGE 2							*ROOM1	*ROOM2	*ROOM3	*ROOM4	
004	4	PLATE								*STAGE1	*STAGE2			
005	5	DELAY L,C,R								*PLATE1	*PLATE2			
006	6	*DELAY LR								*DELAY LCR				
007	7	*ECHO												
008	8	*CROSS DELAY												
009	9	THRU												
:	:	:												
019	13	THRU												
020	14	*KARAOKE1	*KARAOKE2	*KARAOKE3										
021	15	THRU												
:	:	:												
063	3F	THRU												
064	40	THRU												
065	41	CHORUS 1	CHORUS 2	*CHORUS5				CHORUS 4						
066	42	CELESTE 1	*CHORUS4	CELESTE 3				*CHORUS2		*CHORUS3	*CHORUS1	*ROTARY SP5		
067	43	FLANGER 1	*FLANGER4					*FLANGER1		*FLANGER2	*FLANGER3			
068	44	*SYMPHONIC2								*SYMPHONIC1				
069	45	ROTARY SPEAKER 1								*ROTARY SP1				
070	46	TREMOLO								*TREMOLO1	*ROTARY SP4			
071	47	*AUTO PAN2								*AUTO PAN1	*ROTARY SP2	*ROTARY SP3	*TREMOLO2	*GTR TREMOLO
072	48	*PHASER												
073	49	DISTORTION												
074	4A	OVER DRIVE												
075	4B	*AMP SIMULATOR								*DIST HARD	*DIST SOFT			
076	4C	3BAND EQ								*EQ DISCO	*EQ TEL			
077	4D	2-BAND EQ												
078	4E	*AUTO WAH2								*AUTO WAH1				
079	4F	THRU												
080	50	THRU												
081	51	HARMONIC ENHANCER												
082	52	*TOUCH WAH1						*TOUCH WAH2						
083	53	COMPRESSOR												
084	54	NOISE GATE												
085	55	THRU												
086	56	THRU												
087	57	ENSEMBLE DETUNE												
088	58	THRU												
:	:	:												
127	7F	THRU												

<Table 1-12 > Effect Parameter List

XG Effect Name
HALL1,HALL2
ROOM1,ROOM2,ROOM3
STAGE1,STAGE2
PLATE (reverb, variation, insertion block)

No.	Parameter	Display	Value	See Table	Comment	Control
1	Reverb Time	0.3–30.0s	0–69	table#4		
2	Diffusion	0–10	0–10			
3	Initial Delay	0.1mS–99.3mS	0–63	table#5		
4	HPF Cutoff	Thru–8.0kHz	0–52	table#3		
5	LPF Cutoff	1.0k–Thru	34–60	table#3		
6						
7						
8						
9						
10	Dry/Wet	D63>W – D=W – D<W63	1–127			•
11	Rev Delay	0.1mS–99.3mS	0–63	table#5		
12	Density	0–4 (reverb, variation block)	0–4			
		0–2 (insertion block)	0–2			
13	Er/Rev Balance	E63>R – E=R – E<R63	1–127			
14	High Damp	0.1–1.0	1–10			
15	Feedback Level	-63–+63	1–127			
16						

WHITE ROOM
TUNNEL
CANYON
BASEMENT (reverb, variation block)

No.	Parameter	Display	Value	See Table	Comment	Control
1	Reverb Time	0.3-30.0s	0-69	table#4		
2	Diffusion	0-10	0-10			
3	Initial Delay	0.1mS-99.3mS	0-63	table#5		
4	HPF Cutoff	Thru-8.0kHz	0-52	table#3		
5	LPF Cutoff	1.0k-Thru	34-60	table#3		
6	Width	0.5-10.2m	0-37	table#11		
7	Heigt	0.5-20.2m	0-73	table#11		
8	Depth	0.5-30.2m	0-104	table#11		
9	Wall Vary	0-30	0-30			
10	Dry/Wet	D63>W - D=W - D<W63	1-127			•
11	Rev Delay	0.1mS-99.3mS	0-63	table#5		
12	Density	0-4	0-4			
13	Er/Rev Balance	E63>R - E=R - E<R63	1-127			
14	High Damp	0.1–1.0	1-10			
15	Feedback Level	-63-+63	1-127			
16						

DELAY L,C,R (variation, insertion block)

No.	Parameter	Display	Value	See Table	Comment	Control
1	Lch Delay	0.1–715.0ms (variation block)	1–7150			
		0.1–715.0ms (Insertion block)	1–7150			
2	Rch Delay	0.1–715.0ms (variation block)	1–7150			
		0.1–715.0ms (Insertion block)	1–7150			
3	Cch Delay	0.1–715.0ms (variation block)	1–7150			
		0.1–715.0ms (Insertion block)	1–7150			
4	Feedback Delay	0.1–715.0ms (variation block)	1–7150			
		0.1–715.0ms (Insertion block)	1–7150			
5	Feedback Level	-63–+63	1–127			
6	Cch Level	0–127	0–127			
7	High Damp	0.1–1.0	1–10			
8						
9						
10	Dry/Wet	D63>W – D=W – D<W63	1–127			●
11						
12						
13	EQ Low Frequency	32Hz–2.0kHz	4–40	table#3		
14	EQ Low Gain	-12–+12dB	52–76			
15	EQ High Frequency	500Hz–16.0kHz	28–58	table#3		
16	EQ High Gain	-12–+12dB	52–76			

DELAY L,R (variation, insertion block)

No.	Parameter	Display	Value	See Table	Comment	Control
1	Lch Delay	0.1–715.0ms (variation block)	1–7150			
		0.1–715.0ms (Insertion block)	1–7150			
2	Rch Delay	0.1–715.0ms (variation block)	1–7150			
		0.1–715.0ms (Insertion block)	1–7150			
3	Feedback Delay 1	0.1–715.0ms (variation block)	1–7150			
		0.1–715.0ms (Insertion block)	1–7150			
4	Feedback Delay 2	0.1–715.0ms (variation block)	1–7150			
		0.1–715.0ms (Insertion block)	1–7150			
5	Feedback Level	-63–+63	1–127			
6	High Damp	0.1–1.0	1–10			
7						
8						
9						
10	Dry/Wet	D63>W – D=W – D<W63	1–127			●
11						
12						
13	EQ Low Frequency	32Hz–2.0kHz	4–40	table#3		
14	EQ Low Gain	-12–+12dB	52–76			
15	EQ High Frequency	500Hz–16.0kHz	28–58	table#3		
16	EQ High Gain	-12–+12dB	52–76			

ECHO (variation, insertion block)

No.	Parameter	Display	Value	See Table	Comment	Control
1	Lch Delay1	0.1–355.0ms (variation block)	1–3550			
		0.1–355.0ms (insertion block)	1–3550			
2	Lch Feedback Level	-63–+63	1–127			
3	Rch Delay1	0.1–355.0ms (variation block)	1–3550			
		0.1–355.0ms (insertion block)	1–3550			
4	Rch Feedback Level	-63–+63	1–127			
5	High Damp	0.1–1.0	1–10			
6	Lch Delay2	0.1–355.0ms (variation block)	1–3550			
		0.1–355.0ms (insertion block)	1–3550			
7	Rch Delay2	0.1–355.0ms (variation block)	1–3550			
		0.1–355.0ms (insertion block)	1–3550			
8	Delay2 Level	0–127	0–127			
9						
10	Dry/Wet	D63>W – D=W – D<W63	1–127			●
11						
12						
13	EQ Low Frequency	32Hz–2.0kHz	4–40	table#3		
14	EQ Low Gain	-12–+12dB	52–76			
15	EQ High Frequency	500Hz–16.0kHz	28–58	table#3		
16	EQ High Gain	-12–+12dB	52–76			

CROSS DELAY (variation, insertion block)

No.	Parameter	Display	Value	See Table	Comment	Control
1	L->R Delay	0.1–355.0ms (variation block)	1–3550			
		0.1–355.0ms (insertion block)	1–3550			
2	R->L Delay	0.1–355.0ms (variation block)	1–3550			
		0.1–355.0ms (insertion block)	1–3550			
3	Feedback Level	-63–+63	1–127			
4	Input Select	L,R,L&R	0–2			
5	High Damp	0.1–1.0	1–10			
6						
7						
8						
9						
10	Dry/Wet	D63>W – D=W – D<W63	1–127			●
11						
12						
13	EQ Low Frequency	32Hz–2.0kHz	4–40	table#3		
14	EQ Low Gain	-12–+12dB	52–76			
15	EQ High Frequency	500Hz–16.0kHz	28–58	table#3		
16	EQ High Gain	-12–+12dB	52–76			

EARLY REF1,EARLY REF2(variation block)

No.	Parameter	Display	Value	See Table	Comment	Control
1	Type	S-H, L-H, Rdm, Rvs, Plt, Spr	0-5			
2	Room Size	0.1-7.0	0-44	table#6		
3	Diffusion	0-10	0-10			
4	Initial Delay	0.1mS-99.3mS	0-63	table#5		
5	Feedback Level	-63-+63	1-127			
6	HPF Cutoff	Thru-8.0kHz	0-52	table#3		
7	LPF Cutoff	1.0k-Thru	34-60	table#3		
8						
9						
10	Dry/Wet	D63>W - D=W - D<W63	1-127			●
11	Liveness	0-10	0-10			
12	Density	0-3	0-3			
13	High Damp	0.1-1.0	1-10			
14						
15						
16						

GATE REVERB
REVERSE GATE (variation block)

No.	Parameter	Display	Value	See Table	Comment	Control
1	Type	TypeA,TypeB	0-1			
2	Room Size	0.1-20.0	0-127	table#6		
3	Diffusion	0-10	0-10			
4	Initial Delay	0.1mS-200.0mS	0-127	table#5		
5	Feedback Level	-63-+63	1-127			
6	HPF Cutoff	Thru-8.0kHz	0-52	table#3		
7	LPF Cutoff	1.0k-Thru	34-60	table#3		
8						
9						
10	Dry/Wet	D63>W - D=W - D<W63	1-127			●
11	Liveness	0-10	0-10			
12	Density	0-3	0-3			
13	High Damp	0.1-1.0	1-10			
14						
15						
16						

KARAOKE1,2,3 (variation, insertion block)

No.	Parameter	Display	Value	See Table	Comment	Control
1	Delay Time	0.1mS-400.0mS	0-127	table#7		
2	Feedback Level	-63-+63	1-127			
3	HPF Cutoff	Thru-8.0kHz	0-52	table#3		
4	LPF Cutoff	1.0k-Thru	34-60	table#3		
5						
6						
7						
8						
9						
10	Dry/Wet	D63>W - D=W - D<W63	1-127			●
11						
12						
13						
14						
15						
16						

CHORUS1,2,3,4
CELESTE1,2,3,4 (chorus, variation, insertion block)

No.	Parameter	Display	Value	See Table	Comment	Control
1	LFO Frequency	0.00Hz–39.7Hz	0–127	table#1		
2	LFO Depth	0–127	0–127			
3	Feedback Level	-63–+63	1–127			
4	Delay Offset	0.0mS–50mS	0–127	table#2		
5						
6	EQ Low Frequency	32Hz–2.0kHz	4–40	table#3		
7	EQ Low Gain	-12–+12dB	52–76			
8	EQ High Frequency	500Hz–16.0kHz	28–58	table#3		
9	EQ High Gain	-12–+12dB	52–76			
10	Dry/Wet	D63>W – D=W – D<W63	1–127			●
11	EQ Mid Frequency	100Hz–10.0kHz (variation block)	14–54	table#3		
12	EQ Mid Gain	-12–+12dB (variation block)	52–76			
13	EQ Mid Width	1.0–12.0 (variation block)	10–120			
14						
15	Input Mode	mono/stereo	0–1			
16						

FLANGER1,2,3 (chorus, variation, insertion block)

No.	Parameter	Display	Value	See Table	Comment	Control
1	LFO Frequency	0.00Hz–39.7Hz	0–127	table#1		
2	LFO Depth	0–127	0–127			
3	Feedback Level	-63–+63	1–127			
4	Delay Offset	0.0mS–50mS	0–127	table#2		
5						
6	EQ Low Frequency	32Hz–2.0kHz	4–40	table#3		
7	EQ Low Gain	-12–+12dB	52–76			
8	EQ High Frequency	500Hz–16.0kHz	28–58	table#3		
9	EQ High Gain	-12–+12dB	52–76			
10	Dry/Wet	D63>W – D=W – D<W63	1–127			●
11	EQ Mid Frequency	100Hz–10.0kHz (variation block)	14–54	table#3		
12	EQ Mid Gain	-12–+12dB (variation block)	52–76			
13	EQ Mid Width	1.0–12.0 (variation block)	10–120			
14	LFO Phase Difference	-180–+180deg(resolution=3deg.)	4–124			
15						
16						

SYMPHONIC (chorus, variation, insertion block)

No.	Parameter	Display	Value	See Table	Comment	Control
1	LFO Frequency	0.00Hz–39.7Hz	0–127	table#1		
2	LFO Depth	0–127	0–127			
3	Delay Offset	0.0mS–50mS	0–127	table#2		
4						
5						
6	EQ Low Frequency	32Hz–2.0kHz	4–40	table#3		
7	EQ Low Gain	-12–+12dB	52–76			
8	EQ High Frequency	500Hz–16.0kHz	28–58	table#3		
9	EQ High Gain	-12–+12dB	52–76			
10	Dry/Wet	D63>W – D=W – D<W63	1–127			●
11	EQ Mid Frequency	100Hz–10.0kHz (variation block)	14–54	table#3		
12	EQ Mid Gain	-12–+12dB (variation block)	52–76			
13	EQ Mid Width	1.0–12.0 (variation block)	10–120			
14						
15						
16						

ENSEMBLE DETUNE (chorus, variation, insertion block)

No.	Parameter	Display	Value	See Table	Comment	Control
1	Detune	-50–+50cent	14–114			
2	Lch Init Delay	0.0mS–50mS	0–127	table#2		
3	Rch Init Delay	0.0mS–50mS	0–127	table#2		
4						
5						
6						
7						
8						
9						
10	Dry/Wet	D63>W – D=W – D<W63	1–127			●
11	EQ Low Frequency	32Hz–2.0kHz (variation, insertion block)	4–40	table#3		
12	EQ Low Gain	-12–+12dB (variation, insertion block)	52–76			
13	EQ High Frequency	500Hz–16.0kHz (variation, insertion block)	28–58	table#3		
14	EQ High Gain	-12–+12dB (variation, insertion block)	52–76			
15						
16						

AMBIENCE (variation block)

No.	Parameter	Display	Value	See Table	Comment	Control
1	Delay Time	0.0mS-50mS	0-127	table#2		
2	Output Phase	normal/invers	0-1			
3						
4						
5						
6	EQ Low Frequency	32Hz-2.0kHz	4-40	table#3		
7	EQ Low Gain	-12-+12dB	52-76			
8	EQ High Frequency	500Hz-16.0kHz	28-58	table#3		
9	EQ High Gain	-12-+12dB	52-76			
10	Dry/Wet	D63>W - D=W - D<W63	1-127			●
11						
12						
13						
14						
15						
16						

ROTARY SPEAKER (variation, insertion block)

No.	Parameter	Display	Value	See Table	Comment	Control
1	LFO Frequency	0.00Hz–39.7Hz	0–127	table#1		●
2	LFO Depth	0–127	0–127			
3						
4						
5						
6	EQ Low Frequency	32Hz–2.0kHz	4–40	table#3		
7	EQ Low Gain	-12–+12dB	52–76			
8	EQ High Frequency	500Hz–16.0kHz	28–58	table#3		
9	EQ High Gain	-12–+12dB	52–76			
10	Dry/Wet	D63>W – D=W – D<W63	1–127			
11	EQ Mid Frequency	100Hz–10.0kHz (variation block)	14–54	table#3		
12	EQ Mid Gain	-12–+12dB (variation block)	52–76			
13	EQ Mid Width	1.0–12.0 (variation block)	10–120			
14						
15						
16						

2WAY ROTARY SPEAKER (variation block)

No.	Parameter	Display	Value	See Table	Comment	Control
1	Rotor Speed	0.0Hz–39.7Hz	0–127	table#1		●
2	Drive Low	0–127	0–127			
3	Drive High	0–127	0–127			
4	Low/High	L63>H – L=H – L<H63	1–127			
5						
6	EQ Low Frequency	32Hz–2.0kHz	4–40	table#3		
7	EQ Low Gain	-12–+12dB	52–76			
8	EQ High Frequency	500Hz–16.0kHz	28–58	table#3		
9	EQ High Gain	-12–+12dB	52–76			
10						
11	Crossover Frequency	100Hz–10.0kHz	14–54	table#3		
12	Mic L-R Angle	0deg–180deg(resolution=3deg.)	0–60			
13						
14						
15						
16						

TREMOLO (variation, insertion block)

No.	Parameter	Display	Value	See Table	Comment	Control
1	LFO Frequency	0.00Hz–39.7Hz	0–127	table#1		●
2	AM Depth	0–127	0–127			
3	PM Depth	0–127	0–127			
4						
5						
6	EQ Low Frequency	32Hz–2.0kHz	4–40	table#3		
7	EQ Low Gain	-12–+12dB	52–76			
8	EQ High Frequency	500Hz–16.0kHz	28–58	table#3		
9	EQ High Gain	-12–+12dB	52–76			
10						
11	EQ Mid Frequency	100Hz–10.0kHz (variation block)	14–54	table#3		
12	EQ Mid Gain	-12–+12dB (variation block)	52–76			
13	EQ Mid Width	1.0–12.0 (variation block)	10–120			
14	LFO Phase Difference	-180–+180deg(resolution=3deg.)	4–124			
15	Input Mode	mono/stereo	0–1			
16						

AUTO PAN (variation, insertion block)

No.	Parameter	Display	Value	See Table	Comment	Control
1	LFO Frequency	0.00Hz–39.7Hz	0–127	table#1		●
2	L/R Depth	0–127	0–127			
3	F/R Depth	0–127	0–127			
4	PAN Direction	L<->R,L->R,L<-R,Lturn,Rturn,L/R	0–5			
5						
6	EQ Low Frequency	32Hz–2.0kHz	4–40	table#3		
7	EQ Low Gain	-12–+12dB	52–76			
8	EQ High Frequency	500Hz–16.0kHz	28–58	table#3		
9	EQ High Gain	-12–+12dB	52–76			
10						
11	EQ Mid Frequency	100Hz–10.0kHz (variation block)	14–54	table#3		
12	EQ Mid Gain	-12–+12dB (variation block)	52–76			
13	EQ Mid Width	1.0–12.0 (variation block)	10–120			
14						
15						
16						

PHASER 1 (chorus, variation, insertion block)

No.	Parameter	Display	Value	See Table	Comment	Control
1	LFO Frequency	0.00Hz–39.7Hz	0–127	table#1		
2	LFO Depth	0–127	0–127			
3	Phase Shift Offset	0–127	0–127			
4	Feedback Level	-63–+63	1–127			
5						
6	EQ Low Frequency	32Hz–2.0kHz	4–40	table#3		
7	EQ Low Gain	-12–+12dB	52–76			
8	EQ High Frequency	500Hz–16.0kHz	28–58	table#3		
9	EQ High Gain	-12–+12dB	52–76			
10	Dry/Wet	D63>W – D=W – D<W63	1–127			●
11	Stage	4,5,6 (chorus, insertion block)	4–6			
		4–12 (variation block)	4–12			
12	Diffusion	mono/stereo	0–1			
13						
14						
15						
16						

PHASER 2 (variation block)

No.	Parameter	Display	Value	See Table	Comment	Control
1	LFO Frequency	0.00Hz–39.7Hz	0–127	table#1		
2	LFO Depth	0–127	0–127			
3	Phase Shift Offset	0–127	0–127			
4	Feedback Level	-63–+63	1–127			
5						
6	EQ Low Frequency	32Hz–2.0kHz	4–40	table#3		
7	EQ Low Gain	-12–+12dB	52–76			
8	EQ High Frequency	500Hz–16.0kHz	28–58	table#3		
9	EQ High Gain	-12–+12dB	52–76			
10	Dry/Wet	D63>W – D=W – D<W63	1–127			●
11	Stage	3,4,5,6	3–6			
12						
13	LFO Phase Difference	-180deg–+180deg (resolution=3deg.)	4–124			
14						
15						
16						

DISTORTION

OVERDRIVE (variation, insertion block)

No.	Parameter	Display	Value	See Table	Comment	Control
1	Drive	0–127	0–127			●
2	EQ Low Frequency	32Hz–2.0kHz	4–40	table#3		
3	EQ Low Gain	-12–+12dB	52–76			
4	LPF Cutoff	1.0k–Thru	34–60	table#3		
5	Output Level	0–127	0–127			
6						
7	EQ Mid Frequency	100Hz–10.0kHz	14–54	table#3		
8	EQ Mid Gain	-12–+12dB	52–76			
9	EQ Mid Width	1.0–12.0	10–120			
10	Dry/Wet	D63>W – D=W – D<W63	1–127			
11	Edge(Clip Curve)	0–127	0–127	mild–sharp		
12						
13						
14						
15						
16						

COMP+DIST (variation block)

No.	Parameter	Display	Value	See Table	Comment	Control
1	Drive	0–127	0–127			●
2	EQ Low Frequency	32Hz–2.0kHz	4–40	table#3		
3	EQ Low Gain	-12–+12dB	52–76			
4	LPF Cutoff	1.0k–Thru	34–60	table#3		
5	Output Level	0–127	0–127			
6						
7	EQ Mid Frequency	100Hz–10.0kHz	14–54	table#3		
8	EQ Mid Gain	-12–+12dB	52–76			
9	EQ Mid Width	1.0–12.0	10–120			
10	Dry/Wet	D63>W – D=W – D<W63	1–127			
11	Edge(Clip Curve)	0–127	0–127	mild–sharp		
12	Attack	1ms–40ms	0–19	table#8		
13	Release	10ms–680ms	0–15	table#9		
14	Threshold	-48dB– -6dB	79–121			
15	Ratio	1.0–20.0	0–7	table#10		
16						

AMP SIMULATOR (variation, insertion block)

No.	Parameter	Display	Value	See Table	Comment	Control
1	Drive	0–127	0–127			●
2	AMP Type	Off,Stack,Combo,Tube	0–3			
3	LPF Cutoff	1.0k–Thru	34–60	table#3		
4	Output Level	0–127	0–127			
5						
6						
7						
8						
9						
10	Dry/Wet	D63>W – D=W – D<W63	1–127			
11	Edge(Clip Curve)	0–127	0–127	mild–sharp		
12						
13						
14						
15						
16						

3BAND EQ(MONO) (variation, insertion block)

No.	Parameter	Display	Value	See Table	Comment	Control
1	EQ Low Gain	-12–+12dB	52–76			
2	EQ Mid Frequency	100Hz–10.0kHz	14–54	table#3		
3	EQ Mid Gain	-12–+12dB	52–76			
4	EQ Mid Width	1.0–12.0	10–120			
5	EQ High Gain	-12–+12dB	52–76			
6	EQ Low Frequency	50Hz–2.0kHz	8–40	table#3		
7	EQ High Frequency	500Hz–16.0kHz	28–58	table#3		
8						
9						
10						
11						
12						
13						
14						
15	Input Mode	mono/stereo	0–1			
16						

2BAND EQ(STEREO) (variation, insertion block)

No.	Parameter	Display	Value	See Table	Comment	Control
1	EQ Low Frequency	32Hz–2.0kHz	4–40	table#3		
2	EQ Low Gain	-12–+12dB	52–76			
3	EQ High Frequency	500Hz–16.0kHz	28–58	table#3		
4	EQ High Gain	-12–+12dB	52–76			
5						
6						
7						
8						
9						
10						
11						
12						
13						
14						
15						
16						

AUTO WAH (variation, insertion block)

No.	Parameter	Display	Value	See Table	Comment	Control
1	LFO Frequency	0.00Hz–39.7Hz	0–127	table#1		
2	LFO Depth	0–127	0–127			
3	Cutoff Frequency Offset	0–127	0–127		•	
4	Resonance	1.0–12.0	10–120			
5						
6	EQ Low Frequency	32Hz–2.0kHz	4–40	table#3		
7	EQ Low Gain	-12–+12dB	52–76			
8	EQ High Frequency	500Hz–16.0kHz	28–58	table#3		
9	EQ High Gain	-12–+12dB	52–76			
10	Dry/Wet	D63>W – D=W – D<W63	1–127			
11	Drive	0–127(variation block)	0–127			
12						
13						
14						
15						
16						

AUTO WAH+DIST
AUTO WHA+ODRV (variation block)

No.	Parameter	Display	Value	See Table	Comment	Control
1	LFO Frequency	0.00Hz–39.7Hz	0–127	table#1		
2	LFO Depth	0–127	0–127			
3	Cutoff Frequency Offset	0–127	0–127		•	
4	Resonance	1.0–12.0	10–120			
5						
6	EQ Low Frequency	32Hz–2.0kHz	4–40	table#3		
7	EQ Low Gain	-12–+12dB	52–76			
8	EQ High Frequency	500Hz–16.0kHz	28–58	table#3		
9	EQ High Gain	-12–+12dB	52–76			
10	Dry/Wet	D63>W – D=W – D<W63	1–127			
11	Drive	0–127	0–127			
12	EQ Low Gain (distortion)		-12–+12dB	52–76		
13	EQ Mid Gain (distortion)		-12–+12dB	52–76		
14	LPF Cutoff	1.0kHz–thru	34–60	table#3		
15	Output Level	0–127	0–127			
16						

TOUCH WAH 1 (variation, insertion block)
TOUCH WAH+DIST (variation block)

No.	Parameter	Display	Value	See Table	Comment	Control
1	Sensitive	0–127	0–127			
2	Cutoff Frequency Offset	0–127	0–127		•	
3	Resonance	1.0–12.0	10–120			
4						
5						
6	EQ Low Frequency	32Hz–2.0kHz	4–40	table#3		
7	EQ Low Gain	-12–+12dB	52–76			
8	EQ High Frequency	500Hz–16.0kHz	28–58	table#3		
9	EQ High Gain	-12–+12dB	52–76			
10	Dry/Wet	D63>W – D=W – D<W63	1–127			
11	Drive	0–127(variation block)	0–127			
12						
13						
14						
15						
16						

TOUCH WAH 2 (variation, insertion block)
TOUCH WAH+ODRV (variation block)

No.	Parameter	Display	Value	See Table	Comment	Control
1	Sensitive	0–127	0–127			
2	Cutoff Frequency Offset	0–127	0–127		•	
3	Resonance	1.0–12.0	10–120			
4						
5						
6	EQ Low Frequency	32Hz–2.0kHz	4–40	table#3		
7	EQ Low Gain	-12–+12dB	52–76			
8	EQ High Frequency	500Hz–16.0kHz	28–58	table#3		
9	EQ High Gain	-12–+12dB	52–76			
10	Dry/Wet	D63>W – D=W – D<W63	1–127			
11	Drive	0–127(variation block)	0–127			
12	EQ Low Gain (distortion)	-12–+12dB(variation block)	52–76			
13	EQ Mid Gain (distortion)	-12–+12dB(variation block)	52–76			
14	LPF Cutoff	1.0kHz–thru(variation block)	34–60	table#3		
15	Output Level	0–127(variation block)	0–127			
16	Release	10–680ms	52–67			

PITCH CHANGE 1 (variation block)

No.	Parameter	Display	Value	See Table	Comment	Control
1	Pitch	-24–+24	40–88			
2	Initial Delay	0.1mS–400.0mS	0–127	table#7		
3	Fine 1	-50–+50	14–114			
4	Fine 2	-50–+50	14–114			
5	Feedback Level	-63–+63	1–127			
6						
7						
8						
9						
10	Dry/Wet	D63>W – D=W – D<W63	1–127			•
11	Pan 1	L63–R63	1–127			
12	Output Level 1	0–127	0–127			
13	Pan 2	L63–R63	1–127			
14	Output Level 2	0–127	0–127			
15						
16						

PITCH CHANGE 2 (variation block)

No.	Parameter	Display	Value	See Table	Comment	Control
1	Pitch	-24–+24	40–88			
2	Initial Delay	0.1mS–400.0mS	0–127	table#7		
3	Fine 1	-50–+50cent	14–114			
4	Fine 2	-50–+50cent	14–114			
5	Feedback Level	-63–+63	1–127			
6						
7						
8						
9						
10	Dry/Wet	D63>W – D=W – D<W63	1–127			•
11	Pan 1	L63–R63	1–127			
12	Output Level 1	0–127	0–127			
13	Pan 2	L63–R63	1–127			
14	Output Level 2	0–127	0–127			
15						
16						

COMPRESSOR (variation, insertion block)

No.	Parameter	Display	Value	See Table	Comment	Control
1	Attack	1–40ms	0–19	table#8		
2	Release	10–680ms	0–15	table#9		
3	Threshold	-48– -6dB	79–121			
4	Ratio	1.0–20.0	0–7	table#10		
5	Output Level	0–127	0–127			
6						
7						
8						
9						
10						
11						
12						
13						
14						
15						
16						

NOISE GATE (variation, insertion block)

No.	Parameter	Display	Value	See Table	Comment	Control
1	Attack	1–40ms	0–19	table#8		
2	Release	10–680ms	0–15	table#9		
3	Threshold	-72– -30dB	55–97			
4	Output Level	0–127	0–127			
5						
6						
7						
8						
9						
10						
11						
12						
13						
14						
15						
16						

VOICE CANCEL (variation block)

No.	Parameter	Display	Value	See Table	Comment	Control
1						
2						
3						
4						
5						
6						
7						
8						
9						
10						
11	Low Adjust	0–26	0–26			
12	High Adjust	0–26	0–26			
13						
14						
15						
16						

NO EFFECT (reverb, chorus, variation block)
THRU (variation, insertion block)

No.	Parameter	Display	Value	See Table	Comment	Control
1						
2						
3						
4						
5						
6						
7						
8						
9						
10						
11						
12						
13						
14						
15						
16						

HARMONIC ENHANCER (variation block)

No.	Parameter	Display	Value	See Table	Comment	Control
1	HPF Cutoff	500Hz–16kHz	28–58	table#3		
2	Drive	0–127	0–127			
3	Mix Level	0–127	0–127			
4						
5						
6						
7						
8						
9						
10						
11						
12						
13						
14						
15						
16						

TALKING MODULATION (variation block)

No.	Parameter	Display	Value	See Table	Comment	Control
1	Vowel	a,i,u,e,o	0–4			
2	Move speed	1–62	1–62			
3	Drive	0–127	0–127			
4	Output Level	0–127	0–127			
5						
6						
7						
8						
9						
10						
11						
12						
13						
14						
15						
16						

LO-FI (variation block)

No.	Parameter	Display	Value	See Table	Comment	Control
1	Sampling Freq Control	a,i,u,e,o	0–4			
2	Word Length	1–62	1–62			
3	Output Gain	0–127	0–127			
4	LPF Cutoff	0–127	0–127			
5	Filter Type	Thru,PowerBass,Radio,Tel, Clean,Low	0–5			
6	LPF Resonanc	1.0–12.0	10–120			
7	Bit Assign	0–6	0–6			
8	Emphasis	Off/On	0–1			
9						
10	Dry/Wet	D63>W – D=W – D<W63	1–127			•
11						
12						
13						
14						
15	Input Mode	mono/stereo				
16						

DIST+DELAY (variation block)
OVERDRIVE+DELAY (variation block)

No.	Parameter	Display	Value	See Table	Comment	Control
1	Lch Delay Time	0.1–1486.0ms	1–14860			
2	Rch Delay Time	0.1–1486.0ms	1–14860			
3	Delay Feedback Time	0.1–1486.0ms	1–14860			
4	Delay Feedback Level	-63–+63	1–127			
5	Delay Mix	0–127	0–127			
6	Dist Drive	0–127	0–127			
7	Dist Output Level	0–127	0–127			
8	Dist EQ Low Gain	-12–+12dB	52–76			
9	Dist EQ Mid Gain	-12–+12dB	52–76			
10	Dry/Wet	D63>W – D=W – D<W63	1–127			•
11						
12						
13						
14						
15						
16						

COMP+DIST+DELAY (variation block)
COMP+OVERDRIVE+DELAY (variation block)

No.	Parameter	Display	Value	See Table	Comment	Control
1	Delay Time	0.1–1486.0ms	1–14860			
2	Delay Feedback Level	-63–+63	1–127			
3	Delay Mix	0–127	0–127			
4	Dist Drive	0–127	0–127			
5	Dist Output Level	0–127	0–127			
6	Dist EQ Low Gain	-12–+12dB	52–76			
7	Dist EQ Mid Gain	-12–+12dB	52–76			
8						
9						
10	Dry/Wet	D63>W – D=W – D<W63	1–127			•
11	Comp. Attack	1ms–40ms	0–19	table#8		
12	Comp. Release	10ms–680ms	0–15	table#9		
13	Comp. Threshold	-48dB– -6dB	79–121			
14	Comp. Ratio	1.0–20.0	0–7	table#10		
15						
16						

WAH+DIST+DELAY (variation block)
WAH+OVERDRIVE+DELAY (variation block)

No.	Parameter	Display	Value	See Table	Comment	Control
1	Delay Time	0.1–1486.0ms	1–14860			
2	Delay Feedback Level	-63–+63	1–127			
3	Delay Mix	0–127	0–127			
4	Dist Drive	0–127	0–127			
5	Dist Output Level	0–127	0–127			
6	Dist EQ Low Gain	-12–+12dB	52–76			
7	Dist EQ Mid Gain	-12–+12dB	52–76			
8						
9						
10	Dry/Wet	D63>W – D=W – D<W63	1–127			•
11	Wah Sensitive	0–127	0–127			
12	Wah Cutoff Freq Offset	0–127	0–127			
13	Wah Resonance	1.0–12.0	10–120			
14	Wah Release	10–680ms	52–67			
15						
16						

Note: Parameter 10 (Dry/Wet) can only be set for insertion type effects.

VOCAL HARMONY MIDI SPECIFICATIONS

Channel message

1) Note on / off — Harmony ch / Melody ch

9n kk vv	note on message	○ / ○
	Specifies pitch in the Vocoder mode.	
	Velocity not recognized.	
	Also used as Gender Threshold source for the Melody channel.	
8n kk vv	note off message	○ / ○
	Turns the current note off in the Vocoder mode.	
9n kk 00		
	Also used as Gender Threshold source for the Melody channel.	

2) Control change

Bn 40 vv	damper pedal	○ / ○
64	RPN	○ / ○
65	RPN	○ / ○
62	NRPN	○ / ○
63	NRPN	○ / ○
06	Data entry MSB	○ / ○
64	Data Increment	○ / ○
26	Data Decrement	○ / ○
7B	All note off	○ / ○

3) RPN

MSB	LSB		
00	00	Pitch bend sensitivity	○ / ○
7F	7F	NULL	○ / ○

4) NRPN

MSB	LSB		
00	00	Harmony mute	○ / ×
01	08	Vibrato rate modulation	○ / ○
01	09	Vibrato depth modulation	○ / ○
01	0A	Vibrato delay modulation	○ / ○
01	1A	Detune modulation	○ / ×
		Controls the overall amount of detune.	
02	10	Harmony 1 volume	○ / ×
02	11	Harmony 2 volume	○ / ×
02	20	Harmony 1 pan	○ / ×
02	21	Harmony 2 pan	○ / ×
02	30	Harmony 1 detune	○ / ×
02	31	Harmony 2 detune	○ / ×
03	00	Lead gender type	× / ○
03	01	Lead gender amount	× / ○

5) Pitch bend

E0 nn nn		○ / ○
	Only effective when melody channel Lead Gender ON.	

<Table 1-9 > Effect Data Value Assign Table

Table#1
LFO Frequency

Data	Value	Data	Value	Data	Value	Data	Value
0	0.00	32	1.35	64	2.69	96	8.41
1	0.04	33	1.39	65	2.78	97	8.75
2	0.08	34	1.43	66	2.86	98	9.08
3	0.13	35	1.47	67	2.94	99	9.42
4	0.17	36	1.51	68	3.03	100	9.76
5	0.21	37	1.56	69	3.11	101	10.1
6	0.25	38	1.60	70	3.20	102	10.8
7	0.29	39	1.64	71	3.28	103	11.4
8	0.34	40	1.68	72	3.37	104	12.1
9	0.38	41	1.72	73	3.45	105	12.8
10	0.42	42	1.77	74	3.53	106	13.5
11	0.46	43	1.81	75	3.62	107	14.1
12	0.51	44	1.85	76	3.70	108	14.8
13	0.55	45	1.89	77	3.87	109	15.5
14	0.59	46	1.94	78	4.04	110	16.2
15	0.63	47	1.98	79	4.21	111	16.8
16	0.67	48	2.02	80	4.37	112	17.5
17	0.72	49	2.06	81	4.54	113	18.2
18	0.76	50	2.10	82	4.71	114	19.5
19	0.80	51	2.15	83	4.88	115	20.9
20	0.84	52	2.19	84	5.05	116	22.2
21	0.88	53	2.23	85	5.22	117	23.6
22	0.93	54	2.27	86	5.38	118	24.9
23	0.97	55	2.31	87	5.55	119	26.2
24	1.01	56	2.36	88	5.72	120	27.6
25	1.05	57	2.40	89	6.06	121	28.9
26	1.09	58	2.44	90	6.39	122	30.3
27	1.14	59	2.48	91	6.73	123	31.6
28	1.18	60	2.52	92	7.07	124	33.0
29	1.22	61	2.57	93	7.40	125	34.3
30	1.26	62	2.61	94	7.74	126	37.0
31	1.30	63	2.65	95	8.08	127	39.7

Table#2
Modulation Delay Offset

Data	Value	Data	Value	Data	Value	Data	Value
0	0.0	32	3.2	64	6.4	96	9.6
1	0.1	33	3.3	65	6.5	97	9.7
2	0.2	34	3.4	66	6.6	98	9.8
3	0.3	35	3.5	67	6.7	99	9.9
4	0.4	36	3.6	68	6.8	100	10.0
5	0.5	37	3.7	69	6.9	101	11.1
6	0.6	38	3.8	70	7.0	102	12.2
7	0.7	39	3.9	71	7.1	103	13.3
8	0.8	40	4.0	72	7.2	104	14.4
9	0.9	41	4.1	73	7.3	105	15.5
10	1.0	42	4.2	74	7.4	106	17.1
11	1.1	43	4.3	75	7.5	107	18.6
12	1.2	44	4.4	76	7.6	108	20.2
13	1.3	45	4.5	77	7.7	109	21.8
14	1.4	46	4.6	78	7.8	110	23.3
15	1.5	47	4.7	79	7.9	111	24.9
16	1.6	48	4.8	80	8.0	112	26.5
17	1.7	49	4.9	81	8.1	113	28.0
18	1.8	50	5.0	82	8.2	114	29.6
19	1.9	51	5.1	83	8.3	115	31.2
20	2.0	52	5.2	84	8.4	116	32.8
21	2.1	53	5.3	85	8.5	117	34.3
22	2.2	54	5.4	86	8.6	118	35.9
23	2.3	55	5.5	87	8.7	119	37.5
24	2.4	56	5.6	88	8.8	120	39.0
25	2.5	57	5.7	89	8.9	121	40.6
26	2.6	58	5.8	90	9.0	122	42.2
27	2.7	59	5.9	91	9.1	123	43.7
28	2.8	60	6.0	92	9.2	124	45.3
29	2.9	61	6.1	93	9.3	125	46.9
30	3.0	62	6.2	94	9.4	126	48.4
31	3.1	63	6.3	95	9.5	127	50.0

Table#3
EQ Frequency

Data	Value	Data	Value
0	THRU(0)	32	800
1	22	33	900
2	25	34	1.0k
3	28	35	1.1k
4	32	36	1.2k
5	36	37	1.4k
6	40	38	1.6k
7	45	39	1.8k
8	50	40	2.0k
9	56	41	2.2k
10	63	42	2.5k
11	70	43	2.8k
12	80	44	3.2k
13	90	45	3.6k
14	100	46	4.0k
15	110	47	4.5k
16	125	48	5.0k
17	140	49	5.6k
18	160	50	6.3k
19	180	51	7.0k
20	200	52	8.0k
21	225	53	9.0k
22	250	54	10.0k
23	280	55	11.0k
24	315	56	12.0k
25	355	57	14.0k
26	400	58	16.0k
27	450	59	18.0k
28	500	60	THRU(20.0k)
29	560		
30	630		
31	700		

Table#4
Reverb time

Data	Value	Data	Value	Data	Value
0	0.3	32	3.5	64	17.0
1	0.4	33	3.6	65	18.0
2	0.5	34	3.7	66	19.0
3	0.6	35	3.8	67	20.0
4	0.7	36	3.9	68	25.0
5	0.8	37	4.0	69	30.0
6	0.9	38	4.1		
7	1.0	39	4.2		
8	1.1	40	4.3		
9	1.2	41	4.4		
10	1.3	42	4.5		
11	1.4	43	4.6		
12	1.5	44	4.7		
13	1.6	45	4.8		
14	1.7	46	4.9		
15	1.8	47	5.0		
16	1.9	48	5.5		
17	2.0	49	6.0		
18	2.1	50	6.5		
19	2.2	51	7.0		
20	2.3	52	7.5		
21	2.4	53	8.0		
22	2.5	54	8.5		
23	2.6	55	9.0		
24	2.7	56	9.5		
25	2.8	57	10.0		
26	2.9	58	11.0		
27	3.0	59	12.0		
28	3.1	60	13.0		
29	3.2	61	14.0		
30	3.3	62	15.0		
31	3.4	63	16.0		

Table#5
Delay Time(200.0ms)

Data	Value	Data	Value	Data	Value	Data	Value
0	0.1	32	50.5	64	100.8	96	151.2
1	1.7	33	52.0	65	102.4	97	152.8
2	3.2	34	53.6	66	104.0	98	154.4
3	4.8	35	55.2	67	105.6	99	155.9
4	6.4	36	56.8	68	107.1	100	157.5
5	8.0	37	58.3	69	108.7	101	159.1
6	9.5	38	59.9	70	110.3	102	160.6
7	11.1	39	61.5	71	111.9	103	162.2
8	12.7	40	63.1	72	113.4	104	163.8
9	14.3	41	64.6	73	115.0	105	165.4
10	15.8	42	66.2	74	116.6	106	166.9
11	17.4	43	67.8	75	118.2	107	168.5
12	19.0	44	69.4	76	119.7	108	170.1
13	20.6	45	70.9	77	121.3	109	171.7
14	22.1	46	72.5	78	122.9	110	173.2
15	23.7	47	74.1	79	124.4	111	174.8
16	25.3	48	75.7	80	126.0	112	176.4
17	26.9	49	77.2	81	127.6	113	178.0
18	28.4	50	78.8	82	129.2	114	179.5
19	30.0	51	80.4	83	130.7	115	181.1
20	31.6	52	81.9	84	132.3	116	182.7
21	33.2	53	83.5	85	133.9	117	184.3
22	34.7	54	85.1	86	135.5	118	185.8
23	36.3	55	86.7	87	137.0	119	187.4
24	37.9	56	88.2	88	138.6	120	189.0
25	39.5	57	89.8	89	140.2	121	190.6
26	41.0	58	91.4	90	141.8	122	192.1
27	42.6	59	93.0	91	143.3	123	193.7
28	44.2	60	94.5	92	144.9	124	195.3
29	45.7	61	96.1	93	146.5	125	196.9
30	47.3	62	97.7	94	148.1	126	198.4
31	48.9	63	99.3	95	149.6	127	200.0

Table#6
Room Size

Data	Value	Data	Value	Data	Value	Data	Value
0	0.1	32	5.1	64	10.1	96	15.1
1	0.3	33	5.3	65	10.3	97	15.3
2	0.4	34	5.4	66	10.4	98	15.5
3	0.6	35	5.6	67	10.6	99	15.6
4	0.7	36	5.7	68	10.8	100	15.8
5	0.9	37	5.9	69	10.9	101	15.9
6	1.0	38	6.1	70	11.1	102	16.1
7	1.2	39	6.2	71	11.2	103	16.2
8	1.4	40	6.4	72	11.4	104	16.4
9	1.5	41	6.5	73	11.5	105	16.6
10	1.7	42	6.7	74	11.7	106	16.7
11	1.8	43	6.8	75	11.9	107	16.9
12	2.0	44	7.0	76	12.0	108	17.0
13	2.1	45	7.2	77	12.2	109	17.2
14	2.3	46	7.3	78	12.3	110	17.3
15	2.5	47	7.5	79	12.5	111	17.5
16	2.6	48	7.6	80	12.6	112	17.6
17	2.8	49	7.8	81	12.8	113	17.8
18	2.9	50	7.9	82	12.9	114	18.0
19	3.1	51	8.1	83	13.1	115	18.1
20	3.2	52	8.2	84	13.3	116	18.3
21	3.4	53	8.4	85	13.4	117	18.4
22	3.5	54	8.6	86	13.6	118	18.6
23	3.7	55	8.7	87	13.7	119	18.7
24	3.9	56	8.9	88	13.9	120	18.9
25	4.0	57	9.0	89	14.0	121	19.1
26	4.2	58	9.2	90	14.2	122	19.2
27	4.3	59	9.3	91	14.4	123	19.4
28	4.5	60	9.5	92	14.5	124	19.5
29	4.6	61	9.7	93	14.7	125	19.7
30	4.8	62	9.8	94	14.8	126	19.8
31	5.0	63	10.0	95	15.0	127	20.0

Table#7
Delay Time(400.0ms)

Data	Value	Data	Value	Data	Value	Data	Value
0	0.1	32	100.9	64	201.6	96	302.4
1	3.2	33	104.0	65	204.8	97	305.5
2	6.4	34	107.2	66	207.9	98	308.7
3	9.5	35	110.3	67	211.1	99	311.8
4	12.7	36	113.5	68	214.2	100	315.0
5	15.8	37	116.6	69	217.4	101	318.1
6	19.0	38	119.8	70	220.5	102	321.3
7	22.1	39	122.9	71	223.7	103	324.4
8	25.3	40	126.1	72	226.8	104	327.6
9	28.4	41	129.2	73	230.0	105	330.7
10	31.6	42	132.4	74	233.1	106	333.9
11	34.7	43	135.5	75	236.3	107	337.0
12	37.9	44	138.6	76	239.4	108	340.2
13	41.0	45	141.8	77	242.6	109	343.3
14	44.2	46	144.9	78	245.7	110	346.5
15	47.3	47	148.1	79	248.9	111	349.6
16	50.5	48	151.2	80	252.0	112	352.8
17	53.6	49	154.4	81	255.2	113	355.9
18	56.8	50	157.5	82	258.3	114	359.1
19	59.9	51	160.7	83	261.5	115	362.2
20	63.1	52	163.8	84	264.6	116	365.4
21	66.2	53	167.0	85	267.7	117	368.5
22	69.4	54	170.1	86	270.9	118	371.7
23	72.5	55	173.3	87	274.0	119	374.8
24	75.7	56	176.4	88	277.2	120	378.0
25	78.8	57	179.6	89	280.3	121	381.1
26	82.0	58	182.7	90	283.5	122	384.3
27	85.1	59	185.9	91	286.6	123	387.4
28	88.3	60	189.0	92	289.8	124	390.6
29	91.4	61	192.2	93	292.9	125	393.7
30	94.6	62	195.3	94	296.1	126	396.9
31	97.7	63	198.5	95	299.2	127	400.0

Table#8
Compressor Attack Time

Data	Value
0	1
1	2
2	3
3	4
4	5
5	6
6	7
7	8
8	9
9	10
10	12
11	14
12	16
13	18
14	20
15	23
16	26
17	30
18	35
19	40

Table#9
Compressor Release Time

Data	Value
0	10
1	15
2	25
3	35
4	45
5	55
6	65
7	75
8	85
9	100
10	115
11	140
12	170
13	230
14	340
15	680

Table#10
Compressor Ratio

Data	Value
0	1.0
1	1.5
2	2.0
3	3.0
4	5.0
5	7.0
6	10.0
7	20.0

Table#11
Reverb Width;Depth;Height

Data	Value	Data	Value	Data	Value	Data	Value
0	0.5	32	8.8	64	17.6	96	27.5
1	0.8	33	9.1	65	17.9	97	27.8
2	1.0	34	9.4	66	18.2	98	28.1
3	1.3	35	9.6	67	18.5	99	28.5
4	1.5	36	9.9	68	18.8	100	28.8
5	1.8	37	10.2	69	19.1	101	29.2
6	2.0	38	10.4	70	19.4	102	29.5
7	2.3	39	10.7	71	19.7	103	29.9
8	2.6	40	11.0	72	20.0	104	30.2
9	2.8	41	11.2	73	20.2		
10	3.1	42	11.5	74	20.5		
11	3.3	43	11.8	75	20.8		
12	3.6	44	12.1	76	21.1		
13	3.9	45	12.3	77	21.4		
14	4.1	46	12.6	78	21.7		
15	4.4	47	12.9	79	22.0		
16	4.6	48	13.1	80	22.4		
17	4.9	49	13.4	81	22.7		
18	5.2	50	13.7	82	23.0		
19	5.4	51	14.0	83	23.3		
20	5.7	52	14.2	84	23.6		
21	5.9	53	14.5	85	23.9		
22	6.2	54	14.8	86	24.2		
23	6.5	55	15.1	87	24.5		
24	6.7	56	15.4	88	24.9		
25	7.0	57	15.6	89	25.2		
26	7.2	58	15.9	90	25.5		
27	7.5	59	16.2	91	25.8		
28	7.8	60	16.5	92	26.1		
29	8.0	61	16.8	93	26.5		
30	8.3	62	17.1	94	26.8		
31	8.6	63	17.3	95	27.1		

Clavinova®

CVP-700

PARTS LIST

CONTENTS

OVERALL ASSEMBLY ····· 2
MAIN UNIT 1/2 ····· 3
MAIN UNIT 2/2 ····· 5
CONTROL PANEL ASSEMBLY····· 6
INNER BOARD ASSEMBLY ····· 8
TOP BOARD ASSEMBLY (LARGE)····· 8
TOP BOARD ASSEMBLY (SMALL) ····· 9
KEY COVER ASSEMBLY····· 10
MUSIC REST ASSEMBLY····· 11
SIDE COVER ASSEMBLY (L, R)····· 12
RACK ASSEMBLY (L, R) ····· 13
END BLOCK ASSEMBLY (L, R)····· 14
FRONT RAIL ASSEMBLY ····· 15
FLOPPY DISK DRIVE ASSEMBLY ····· 16
JACK ASSEMBLY ····· 17
FU120L ASSEMBLY····· 18
MA120 ASSEMBLY····· 19
MIC. & PHONES UNIT ····· 20
LCD ASSEMBLY····· 21
KEYBOARD ASSEMBLY ····· 22
SPEAKER BOX ASSEMBLY ····· 24
PEDAL BOX ASSEMBLY ····· 25
PEDAL ASSEMBLY (D)····· 26
BENCH ····· 27
ELECTRICAL PARTS····· 28~41

Notes : DESTINATION ABBREVIATIONS

A:	Australian model	M:	South African model
B:	British model	O:	Chinese model
C:	Canadian model	Q:	South-east Asia model
D:	German model	T:	Taiwan model
E:	European model	U:	U.S.A. model
F:	French model	V:	General export model (110 V)
H:	North European model	W:	General export model (220 V)
I :	Indonesian model	N,X:	General export model
J :	Japanese model	Y:	Export model

WARNING

Components having special characteristics are marked ⚠ and must be replaced with parts having specification equal to those originally installed.

- The numbers in " QTY " show quantities for each unit.
- The parts with " **- -** " in " PART NO. " are not available as spare parts.
- The mark " } " in the remarks column indicates that these parts are interchangeable.
- The second letter of the shaded ( ) part number is O, not zero.
- The second letter of the shaded ( ) part number is I, not one.

OVERALL ASSEMBLY

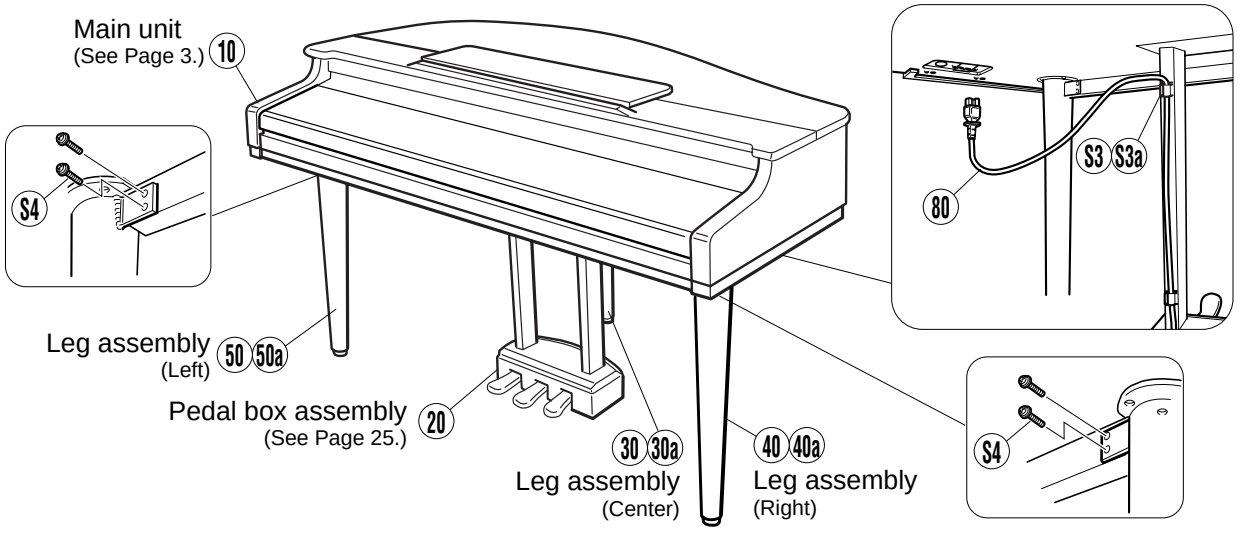

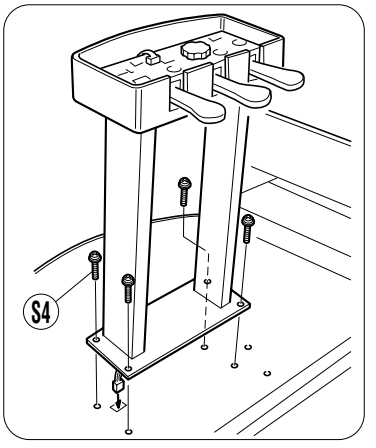

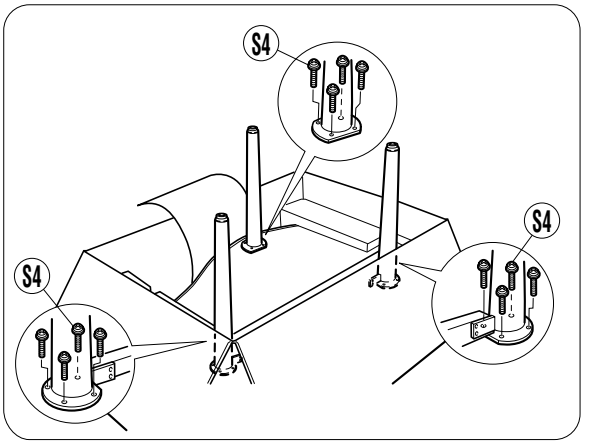

REF NO.	PART NO.	DESCRIPTION			REMARKS		QTY	RANK
		OVERALL ASSEMBLY			CVP-700			
	- -	Overall Assembly			U	(V443710)		
	- -	Overall Assembly			E	(V443720)		
10	- -	Main Unit			U	(V443770)		
10	- -	Main Unit			E	(V443780)		
20	- -	Pedal Box Assembly				(V280770)		
30	**V2807200**	Leg Assembly	CENTER					16
30a	**V2807100**	Cap, Leg	GOLD					07
40	**V2807300**	Leg Assembly	LEFT					17
40a	**V2807100**	Cap, Leg	GOLD					07
50	**V2807400**	Leg Assembly	RIGHT					17
50a	**V2807100**	Cap, Leg	GOLD					07
⚠ 80	**VT015800**	AC Cord Set	U 2P 2.44m 7A		U			06
⚠ 80	**VT015900**	AC Cord Set	E 2P 2.5m		E			05
⚠ 80	**V2917100**	AC Cord Set	E 2P 2.5m 2.5A		E			05
⚠ 80	**V3126300**	AC Cord Set	E 2P 2.5m		E			
		ACCESSORIES						
	- -	Bench	BC-15			(VY80710)		
	VY989200	Screw Set						05
	V3239900	Floppy Disk	3.50 inch					04
	V2289900	Floppy Disk	3.50 inch 2000K					03
	VY989200	Screw Set						05
S3	- -	Cord Clamp Set				(VV88510)		
S3a	**VV884900**	Cord Clamper	DKN-10B				2	
S4	**VD614900**	Cup Screw	5.0X20 MFZN2BL				20	01

⁎: New Parts

RANK: Japan only

■ MAIN UNIT 1/2

• Top view

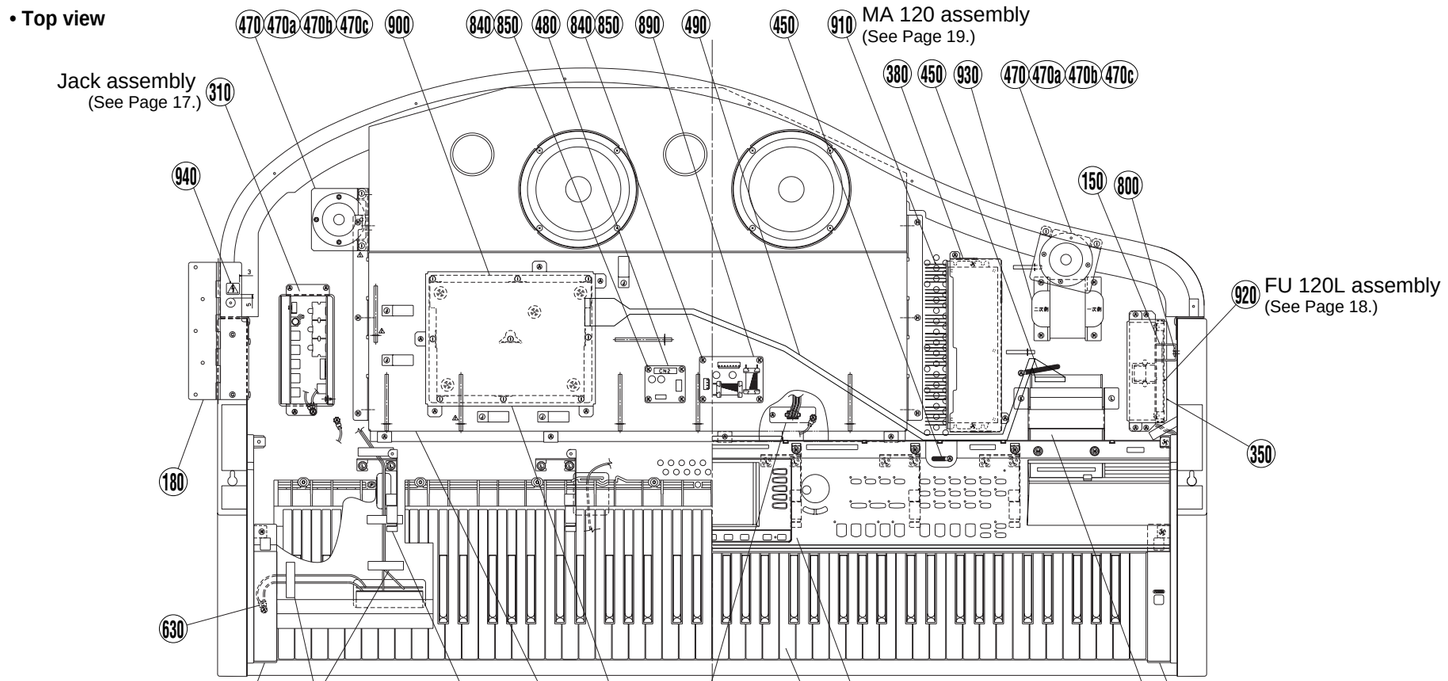

• Side view

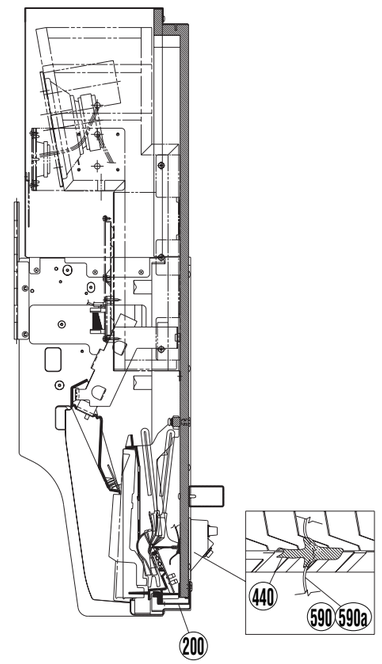

• Bottom view

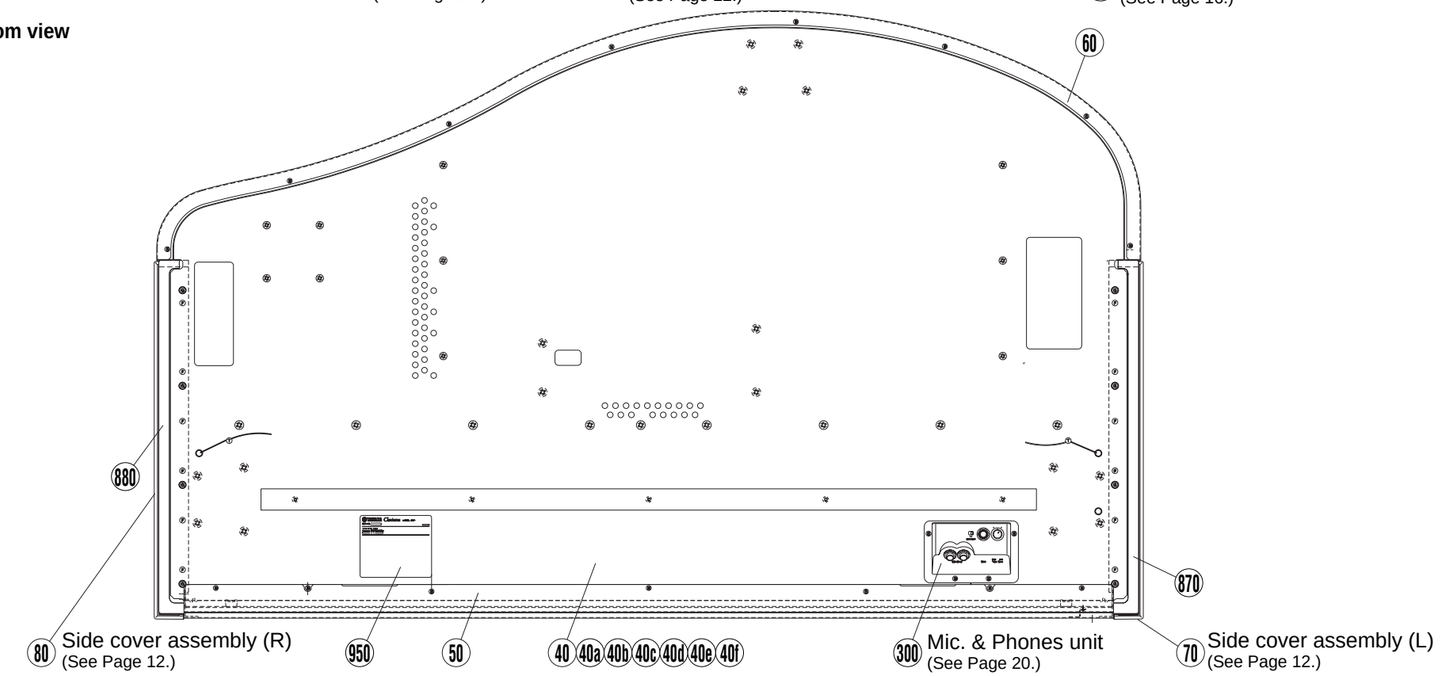

LOC-ATION	MARK	SCREW
640	G	Bind Head Tapping Screw-1
650	D	Bind Head Tapping Screw-B
660	A	Bind Head Tapping Screw-1
670	B	Bind Head Tapping Screw-1
680	C	Bind Head Tapping Screw-B
690	O	Pan Head Screw
700	P	Bind Head Tapping Screw-1
710	N	Bind Head Tapping Screw-B
720	L	PW Head Tapping Screw-1
730	M	Bind Head Screw
740	T	Bind Head Tapping Screw-1
760	R	Bind Head Tapping Screw-B
765	I	Bind Head Tapping Screw-B
770	J	Truss Head Tapping Screw-1
780	H	Truss Head Screw
790	Q	Tapping Screw
800	—	Bind Head Tapping Screw-B
820	S	Bind Head Tapping Screw-1
850	K	Bind Head Tapping Screw-1
860	F	Truss Head Tapping Screw-1

REF NO.	PART NO.	DESCRIPTION			REMARKS		QTY	RANK
		MAIN UNIT			CVP-700			
	- -	Main Unit			U	(V443770)		
	- -	Main Unit			E	(V443780)		
10	**VV295600**	Top Board Assembly	LARGE					40
20	**V2806700**	Top Board Assembly	SMALL					33
30	**VV296400**	Music Rest Assembly						20
* 40	**V4439200**	Keybed Assembly						
40a	- -	Plate	A			(V325850)		
40b	- -	Plate	B			(V325860)	2	2
40c	**ET200090**	Nut	B 5.0X15 MFZN2Y				6	01
40d	**EP030240**	Bind Head Tapping Screw-1	3.5X12 MFZN2Y				8	01
40e	**ET200030**	Nut	B 5.0X12 MFZN2Y				19	01
40f	**ET200040**	Nut	B 4.0X11.5 MFZN2Y				10	01
50	--	Front Rail Assembly				(V449090)		
60	**V4159000**	Back Top Panel Assembly						
70	**V2804600**	Side Cover Assembly	LEFT					20
80	**V2804700**	Side Cover Assembly	RIGHT					21
90	- -	End Block Assembly	LEFT			(VV60330)		
100	- -	End Block Assembly	RIGHT			(VV60320)		
110	- -	Control Panel Assembly			U	(V443930)		
110	- -	Control Panel Assembly			E	(V447970)		
120	**V2806200**	Key Cover Assembly						37
* 130	**V4759500**	Inner Board Assembly						21
140	**VV296500**	Top Board Stay Assembly						10
150	**VV622900**	Stay						05
160	**VY941200**	Bushing	FRONT					03
170	**VY941300**	Bushing	REAR					03
180	**VY891200**	Hinge Assembly						09
190	**VU431800**	Keyboard Assembly	GH A88 K6					55
200	**V4008900**	Holder Assembly, Keyboard						
210	**VV909500**	Holder, Leg						12
220	**V2826100**	Rack Assembly	LEFT					08
230	**V2826200**	Rack Assembly	RIGHT					08
240	**VS312100**	Rack Cover	LEFT					03
250	**VS312200**	Rack Cover	RIGHT					03
260	**VV666100**	Control Panel Holder					5	08
260a	**VY681600**	Felt	C 30 17					03
260b	**VA121600**	Bushing					2	01
260c	**VA121400**	Spacer					2	02
270	**VN891200**	Connector Panel						03
290	- -	Floppy Disk Drive Assembly				(V426770)		
300	- -	Mic. & Phones Unit				(V342250)		
310	- -	Jack Assembly				(V447960)		
340	**VV607300**	DM Cover			U			08
350	**VV607200**	FU Cover Assembly						06
380	**V2191000**	MA Cover Assembly			U			07
410	**CB069250**	Cord Holder	BK-1				2	01
440	- -	Adhesive Tape	12X60			(V348160)	9	
450	**CB817510**	Cord Binder	S-14B				2	03
* 460	**V4749100**	Speaker Box Assembly						
470	- -	Speaker Assembly	TWEETER			(V481270)	2	
470a	**V2816700**	Speaker Angle						04
470b	**XT347A00**	Speaker	5.0cm 24ohm 60W		TWEETER			
470c	**EP600190**	Bind Head Tapping Screw-B	3.0X8 MFZN2BL				3	01
* 480	**V4757300**	Circuit Board	NW1					
490	**V3261500**	Connector Assembly	FDD-SIG L=900					
500	**VK105200**	Connector Assembly	KRD-KRD 2P-300					03
510	- -	Connector Assembly	MIC-LF			(V291400)		
510a	- -	Connector Assembly	KRD-KRD 5P-700			(VK11800)		
510b	**VD947800**	Data Line Filter	ESD-R-25D-B					05
520	- -	Connector Assembly	MIDI-LF			(V306250)		
520a	- -	Connector Assembly	KED-KRD 7P-500			(VK11230)		
520b	**VD947800**	Data Line Filter	ESD-R-25D-B					05
530	- -	Connector Assembly	MK-LF			(VZ01720)		
530a	- -	Connector Assembly	KRD-KRD 8P-650			(VK11680)		
530b	**VD947800**	Data Line Filter	ESD-R-25D-B					05
540	- -	Connector Assembly	KRD-KRD 16P-250			(VK10510)		
550	**VK111000**	Connector Assembly	KRD-KRD 7P-450					05
570	- -	Connector Assembly	KRD-KRD 9P-1100			(VK12870)		
580	- -	Connector Assembly	KRD-KRD 7P-950			(VK12570)		

*: New Parts

RANK: Japan only

REF NO.	PART NO.	DESCRIPTION			REMARKS		QTY	RANK
590	- -	PK Cable				(V291410)		
590a	**VD947800**	Data Line Filter	ESD-R-25D-B					05
600	**VV652000**	Connector Assembly	FDD					06
610	- -	Connector Assembly	NW			(V475760)		
620	- -	Connector Assembly	SP			(V288480)		
630	- -	Connector Assembly	HP			(VL50740)		
635	- -	Connector Assembly	MIC			(V340590)		
640	**VF573000**	Bind Head Tapping Screw-1	4.0X25 MFZN2BL				8	01
650	**VS206000**	Bind Head Tapping Screw-B	4.0X25 MFZN2BL				5	01
660	**EP030340**	Bind Head Tapping Screw-1	3.5X12 MFZN2BL				18	01
660	**EP030340**	Bind Head Tapping Screw-1	3.5X12 MFZN2BL		U		7	01
670	**EP030250**	Bind Head Tapping Screw-1	3.5X14 MFZN2BL				19	01
680	**VR525900**	Bind Head Tapping Screw-B	4.0X14 MFZN2BL				14	01
690	**VV040700**	Pan Head Screw	PW5.0X25 MFZN2Y				9	01
700	**EP040230**	Bind Head Tapping Screw-1	4.0X14 MFZN2Y				2	01
710	**EP600240**	Bind Head Tapping Screw-B	4.0X10 MFZN2BL				9	01
720	**VZ057000**	PW Head Tapping Screw-1	3.5X18-10 MFZN2Y				12	01
730	**03753440**	Bind Head Screw	4.0X10 MFZN2Y				2	01
740	**EP030240**	Bind Head Tapping Screw-1	3.5X12 MFZN2Y				2	01
760	**VE683000**	Bind Head Tapping Screw-B	3.0X12 MFZN2Y				10	01
765	**EP600190**	Bind Head Tapping Screw-B	3.0X8 MFZN2BL				15	01
770	**EN630230**	Truss Head Tapping Screw-1	3.5X14 MFZN2Y				5	01
770	**EN630230**	Truss Head Tapping Screw-1	3.5X14 MFZN2Y		U			01
* 780	**VB931700**	Truss Head Screw	4.0X14 MFZN2BL				10	
790	**VV732500**	Tapping Screw	5X12 MFZN2BL				10	01
795	**V5128600**	Washer	9X3.5X0.35				10	
800	**EP600750**	Bind Head Tapping Screw-B	4.0X14 MFZN2Y				2	01
810	**VZ060900**	Bind Head Screw	5.0X25 MFZN2Y					01
820	**EP030260**	Bind Head Tapping Screw-1	3.5X16 MFZN2BL				17	01
840	**CB040950**	Spacer					8	03
850	**EP030470**	Bind Head Tapping Screw-1	3.5X20 MFZN2Y				8	01
860	**23720900**	Truss Head Tapping Screw-1	4.0X35 MFZN2BL				12	01
870	**V3223900**	Side Cover Assembly	LEFT					16
880	**V3224000**	Side Cover Assembly	RIGHT					16
890	**V2455000**	Circuit Board	NETWORK					11
* 900	**V4997600**	Circuit Board	DM					
910	**VT492000**	MA120 Assembly			U			23
910	**VT492100**	MA120 Assembly			E			23
920	**VV651300**	FU120L Assembly			U			
920	**VV651400**	FU120L Assembly			E			13
⚠ 930	**XQ426A00**	Power Transformer	29WP244		U			13
⚠ 930	**XQ427A00**	Power Transformer	GA-120 IEC65		E			14
⚠ 930	**XQ427B00**	Power Transformer	GA-120 IEC65		E			14
940	**VB951400**	Graphic Mark	MKX-5 UL		U			03
950	- -	Name Plate			U	(V443880)		
950	- -	Name Plate			E	(V447980)		

*: New Parts

RANK: Japan only

■ MAIN UNIT 2/2

• Top view

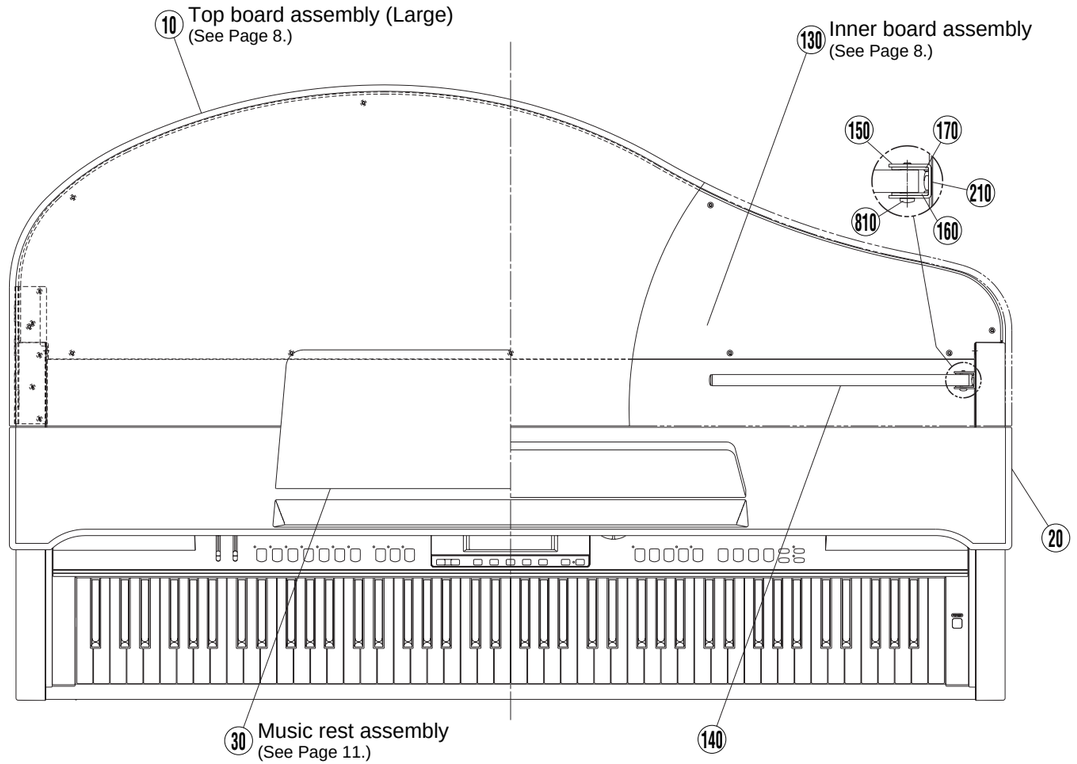

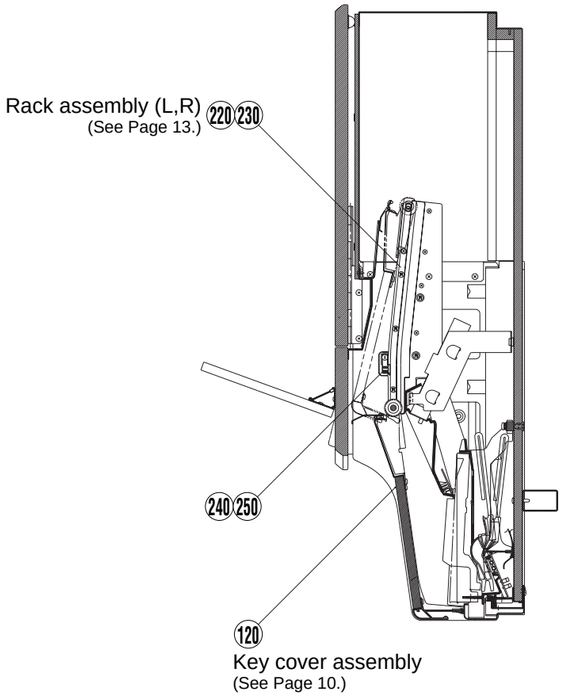

LOC-ATION	MARK	SCREW
760	R	Bind Head Tapping Screw-B
765	I	Bind Head Tapping Screw-B
790	Q	Tapping Screw
820	S	Bind Head Tapping Screw-1

■ CONTROL PANEL ASSEMBLY

• Bottom view

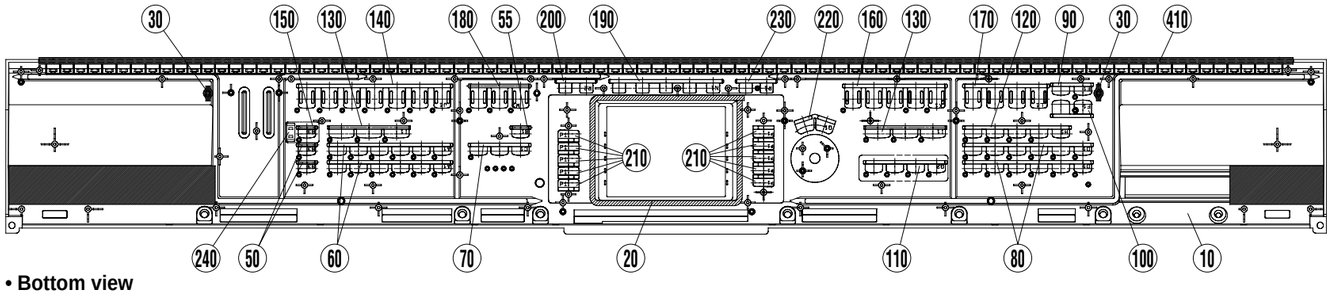

• Bottom view

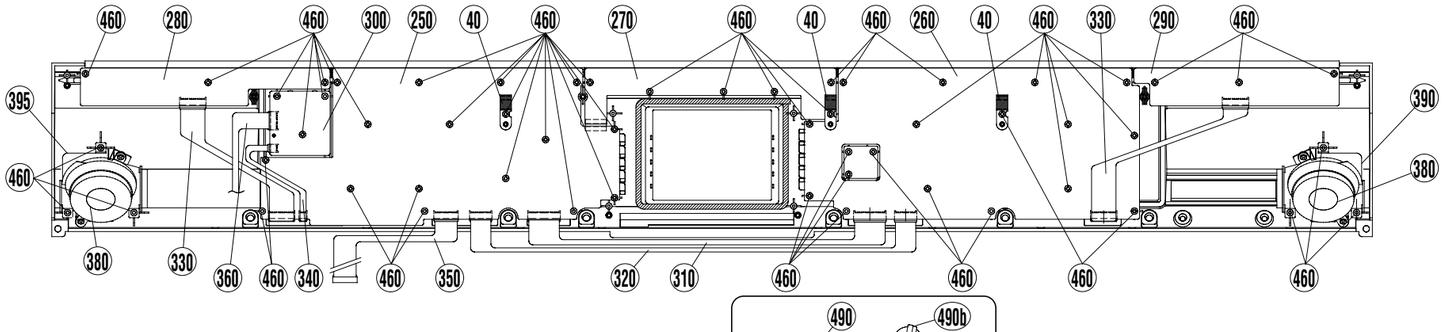

• Bottom view

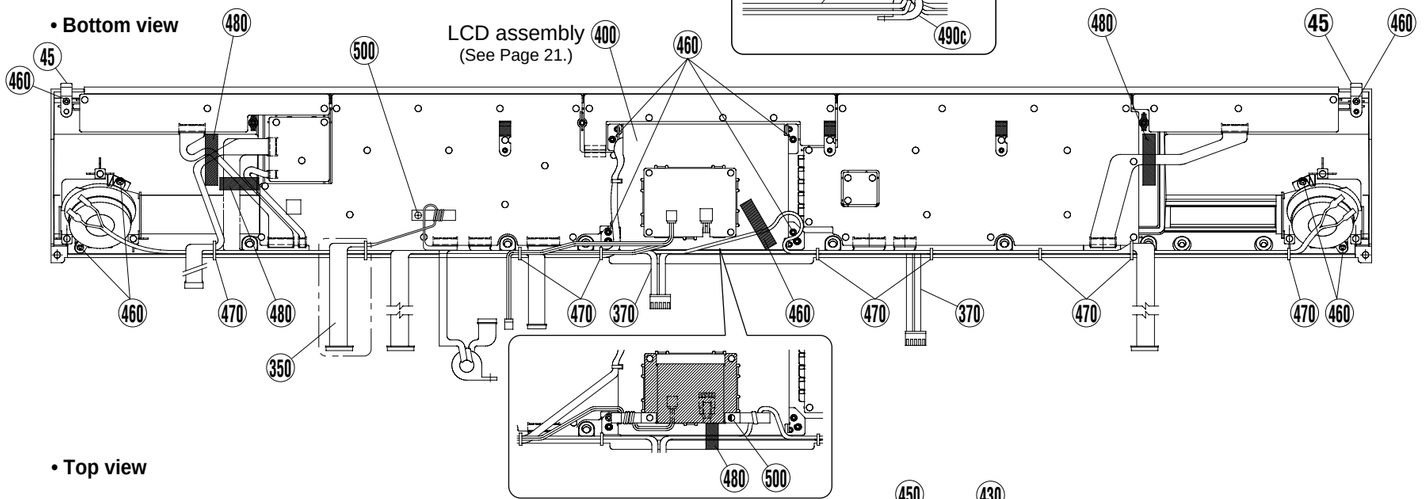

• Top view

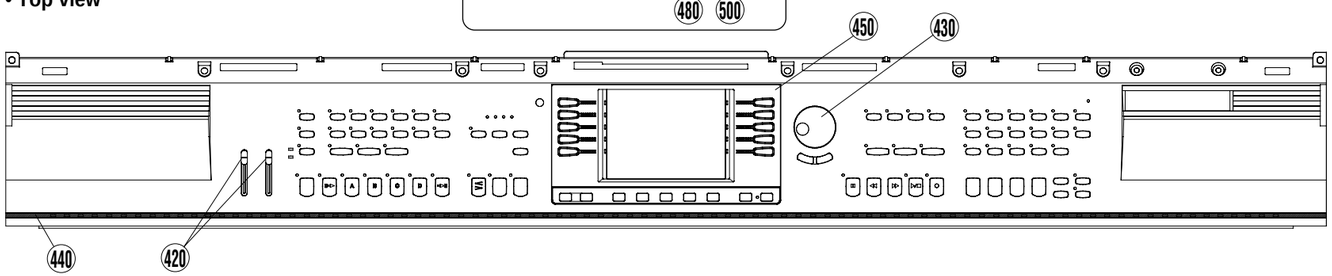

• Side view



REF NO.	PART NO.	DESCRIPTION			REMARKS	QTY	RANK
		CONTROL PANEL ASSEMBLY			CVP-700		
	- -	Control Panel Assembly			U (V443930)		
	- -	Control Panel Assembly			E (V447970)		
* 10	**V4545100**	Control Panel					
20	- -	Dust Proof Sheet	LC-3000#2N		(VV61640)		
30	**VY681600**	Felt	C 30 17			2	03
40	**V3626000**	Control Panel Holder	B			3	04
* 45	**V4471100**	Control Panel Holder	H1			2	
50	**V3720000**	Push Button	B3 1P		DEMO,HELP	2	
55	**V3303300**	Push Button	B1 1P		TAP		
60	**V3704300**	Push Button	A1 6P		8BEAT,16BEAT,BALLAD, DANCE,ROCK/R&B,PIANIST, SWING,LATIN,COUNTRY, BALL-ROOM,TRAD/WALTZ,DISK	2	
70	**V3704400**	Push Button	C1 3P		METRONOME,TEMPO -/+		
80	**V3704500**	Push Button	D1 6P		PIANO,E.PIANO,GUITAR, ORGAN,STRINGS/CHOIR, BRASS,SAX/FLUTE,BASS,PER-CUSSION,ENSEMBLE,XG	2	
90	**V3315800**	Push Button	E1 2P		BANK -,REGISTRATION		
100	**V3255500**	Push Button	F1 2P		BANK +,ONE TOUCH SETTING		
110	**V3704600**	Push Button	G2 4P		SONG,MIXER,MASTER EQUALI-ZER,FUNCTION		
120	**V3303200**	Push Button	H1 5P		DUAL,SPLIT,REVERB,CHORUS, EFFECT		
130	**V3704700**	Push Button	I1 3P		EASY PLAY,NEXT NOTE, SOUND REPEAT	2	
140	**V3252300**	Push Button	J1 7P		ACMP ON,INTRO,MAIN A-D, ENDING		
150	**V3315900**	Push Button	B2 1P		VOCAL HARMONY		
160	**V3704800**	Push Button	K1 5P		PAUSE,REW,FF,PLAY/STOP, REC		
170	**V3704900**	Push Button	L1 4P		1,2,3,4		
180	**V3252400**	Push Button	M1 3P		FADE IN/OUT,SYNCHRO, START/STOP		
190	**V3705000**	Push Button	N1 5P		LCD select		
200	**V3719900**	Push Button	R2 2P		PAGE <,PAGE >		
210	**V3705100**	Push Button	P1 1P		LCE select	10	
220	**V3705200**	Push Button	Q1 2P		-,+		
230	**V3452500**	Push Button	R1 2P		EXIT,DIRECT ACCESS		
240	**V3455500**	Lens, LED	2P		OVER,SIGNAL		
250	**V3134500**	Circuit Board	PNL				
260	**V3134900**	Circuit Board	PNR				12
270	**VV880100**	Circuit Board	PNGC				11
280	**V3135400**	Circuit Board	PNGL				10
290	**V3135300**	Circuit Board	PNGR				10
300	**V3135500**	Circuit Board	MV				10
310	**VK110500**	Connector Assembly	KRD-KRD 16P-400		E		06
320	**VJ983500**	Connector Assembly	KRD-KRD 10P-500		E		05
330	**VK103000**	Connector Assembly	KRD-KRD 12P-200			2	03
340	**VK099800**	Connector Assembly	KRD-KRD 3P-150				04
350	- -	Connector Assembly	PN-LF		(V332240)		
350a	- -	Connector Assembly	KRD-KRD 14P-450		(VK11160)		
350b	**VD947800**	Data Line Filter	ESD-R-25D-B				05
360	- -	Connector Assembly	VOL L=400		(V222620)		
370	- -	Connector Assembly	MON-SP		(V475770)		
380	**XU755A00**	Speaker	3.0cm 8ohm 60W		MONITOR	2	10
390	**V3436900**	Monitor Speaker Holder	RIGHT				05
395	**V3437000**	Monitor Speaker Holder	LEFT				05
* 400	**V4447000**	LCD Assembly			U		
400	**V3425100**	LCD Assembly			E		
410	**VU638700**	Felt	MK				05
420	**VS179900**	Slide Knob			VOLUME (MASTER,ACMP/SONG)	2	03
430	**VQ664100**	Encoder Knob	VL1		Data dial		02
440	**VT191300**	Keyboard LED Sheet					04
450	**V3729600**	LCD Cover					
460	**EP600250**	Bind Head Tapping Screw-B	3.0X8 MFZN2Y			67	01
470	**CB069250**	Cord Holder	BK-1			9	01
480	**VA126100**	Adhesive Tape	12X50			4	03
490	- -	Connector Assembly	PN-LF2		U (V332250)		

*: New Parts

RANK: Japan only

REF NO.	PART NO.	DESCRIPTION			REMARKS	QTY	RANK
490a	- -	Connector Assembly	KRD-KRD 10P-650		(VK11700)		
490b	- -	Connector Assembly	KRD-KRD 16P-550		(VK11460)		
490c	**VD947800**	Data Line Filter	ESD-R-25D-B				05
500	**EP600140**	Bind Head Tapping Screw-B	3.0X10 MFZN2BL		U	2	01
500	**EP600140**	Bind Head Tapping Screw-B	3.0X10 MFZN2BL		E		01

*: New Parts

RANK: Japan only

■ INNER BOARD ASSEMBLY

• Top view

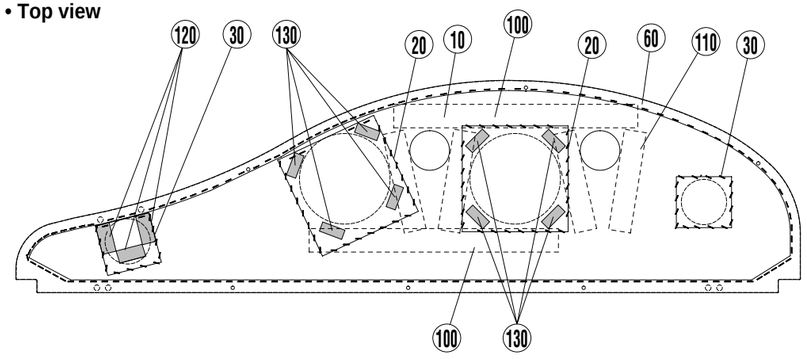

• Rear view

REF NO.	PART NO.	DESCRIPTION			REMARKS	QTY	RANK
*	**V4759500**	INNER BOARD ASSEMBLY			CVP-700		21
10	**- -**	Inner Board			(V280630)		
20	**- -**	Speaker Grille			(V309220)	2	
30	**- -**	Speaker Grille			(V309230)	2	
60	**- -**	Jersey	1430X420		(V287800)		
100	**- -**	Felt	440X40X1T		(V333320)	2	
110	**- -**	Felt	150X40X1T		(V333330)	4	
120	**- -**	Cushion	50X23XT2		(V322710)	3	
130	**- -**	Cushion	50X23XT2		(V322710)	8	

*: New Parts

RANK: Japan only

■ TOP BOARD ASSEMBLY (LARGE)

• Top view

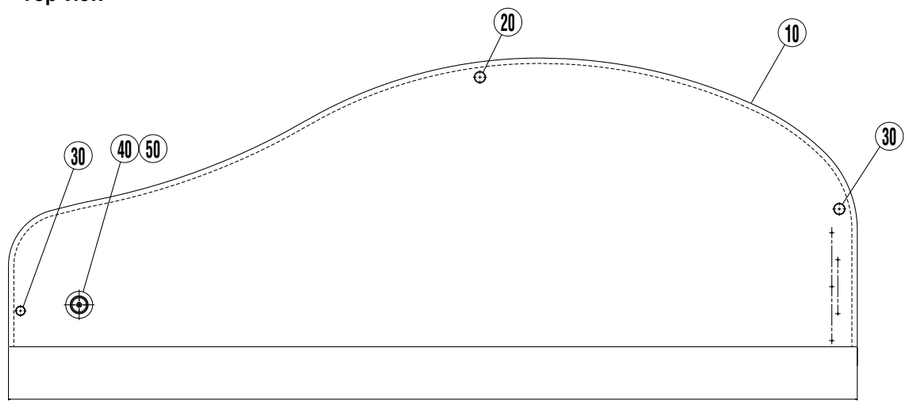

• Front view

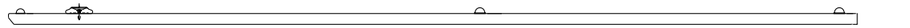

REF NO.	PART NO.	DESCRIPTION			REMARKS	QTY	RANK
	VV295600	TOP BOARD ASSEMBLY	LARGE		CVP-700		40
10	**- -**	Top Board L			(VV70020)		
20	**VS440000**	Stopper	A SJ-5017			2	04
30	**CB048710**	Leg Rubber	BL				04
40	**VV773200**	Recess					05
50	**03740480**	Flat Head Tapping Screw-1	3.5X16 MFZN2BL				01

*: New Parts

RANK: Japan only

TOP BOARD ASSEMBLY (SMALL)

• Top view

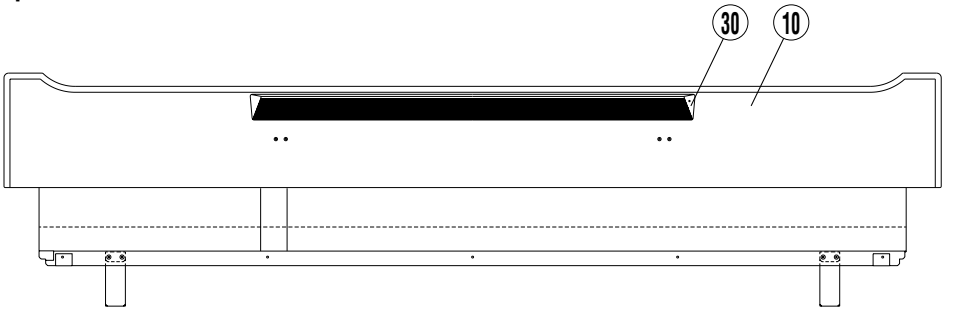

• Rear view

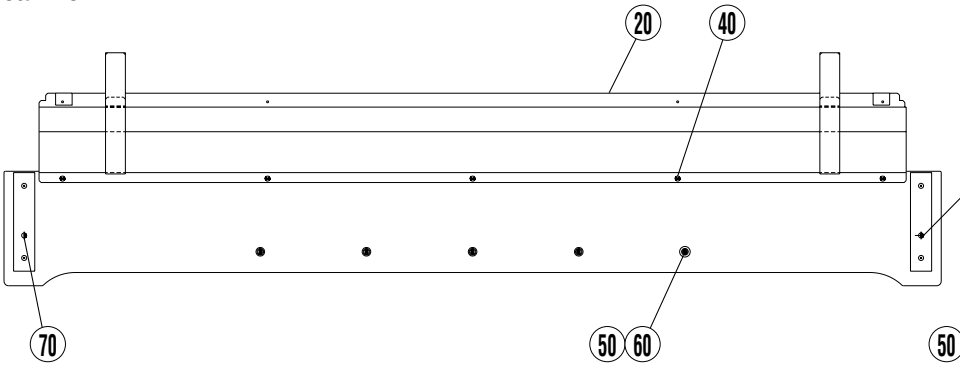

• Side view

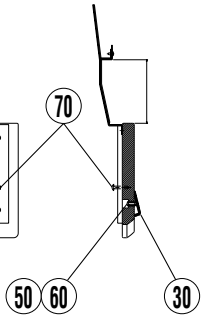

REF NO.	PART NO.	DESCRIPTION			REMARKS	QTY	RANK
	V2806700	TOP BOARD ASSEMBLY	SMALL		CVP-700		33
10	**- -**	Top Board S			(V280660)		
20	**V2804200**	Holder Assembly					17
30	**VV299500**	Stopper Rail, Music Score					09
40	**EP030170**	Bind Head Tapping Screw-1	3.5X14 MFZN2Y			7	01
50	**VK287600**	Flat Washer	4.0X12X1.0 MFZN2Y			5	01
60	**EP600270**	Bind Head Tapping Screw-P	3.0X10 MFZN2Y			5	01
70	**03747250**	Truss Head Tapping Screw-1	4.0X25 MFZN2Y			2	01
80	**- -**	Guide			(V332950)		
90	**- -**	Cushion	U-32 T2X110X10		(V334850)		
100	**- -**	Skin	200X45XT1		(V334860)		

⋆: New Parts

RANK: Japan only

KEY COVER ASSEMBLY

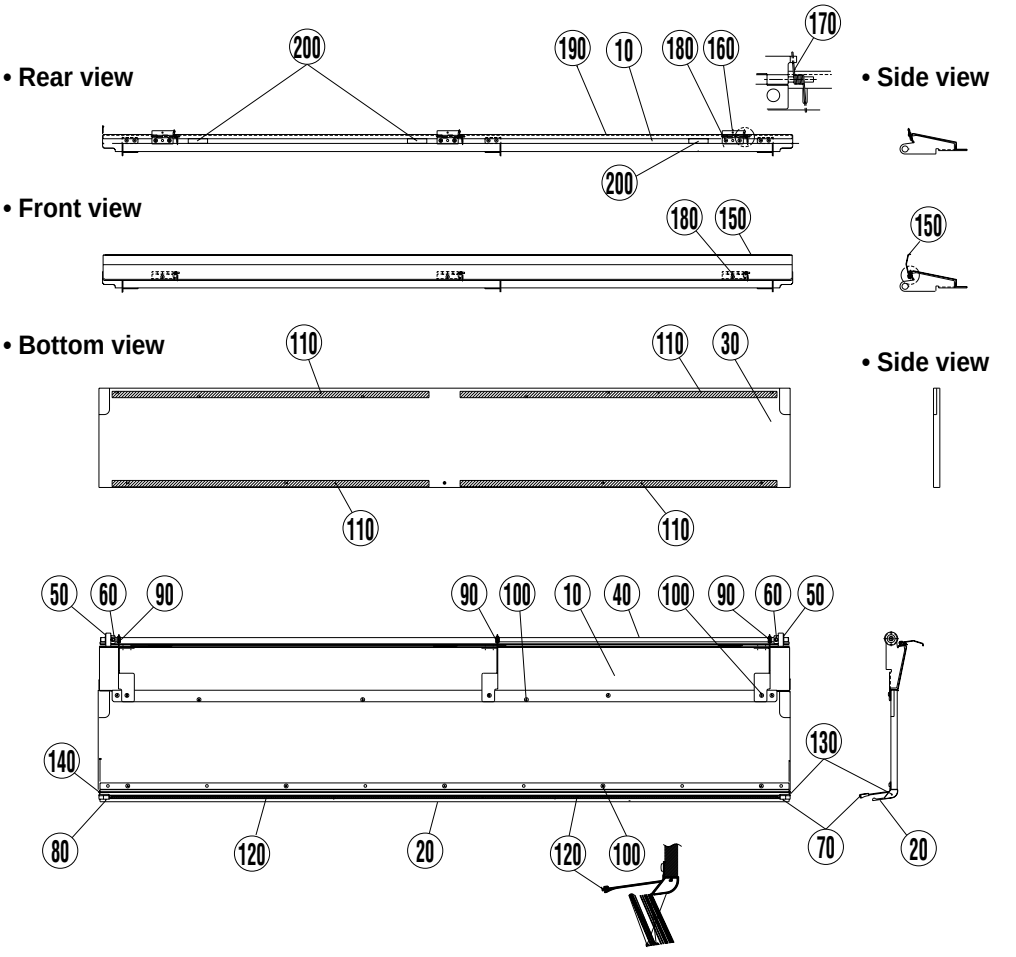

REF NO.	PART NO.	DESCRIPTION			REMARKS	QTY	RANK
	V2806200	KEY COVER ASSEMBLY			CVP-700		37
10	**V2806000**	Sash Assembly	REAR				19
20	**V3090400**	Sash Assembly	FRONT				18
30	**- -**	Slide Cover			(VV29860)		
40	**VU257800**	Rod					09
50	**VT190400**	Gear				2	03
60	**EG330060**	Bind Head Screw	3.0X10 MFZN2Y			2	01
70	**VU274900**	Sash Cover	LEFT BL				03
80	**VU275000**	Sash Cover	RIGHT BL				03
90	**VS368500**	Bushing				3	03
100	**EP030320**	Bind Head Tapping Screw-1	3.5X10 MFZN2BL			14	01
110	**- -**	Adhesive Tape	#500 600X12		(VO02370)	4	
120	**VU457600**	Cushion	421X2.5X4			3	03
130	**VU708600**	Sash Cap	LEFT				03
140	**VU708700**	Sash Cap	RIGHT				03
150	**- -**	Shutter			(V287760)		
160	**- -**	Hinge			(V287770)	3	
170	**V2877800**	Spring				2	03
180	**EP600230**	Bind Head Tapping Screw-B	3.0X6 MFZN2BL			9	01
190	**- -**	Felt			(V312310)		
200	**- -**	Cushion	L-24 T6X40X9		(V323330)	3	

⋆: New Parts

RANK: Japan only

MUSIC REST ASSEMBLY

• **Rear view**

• **Side view**

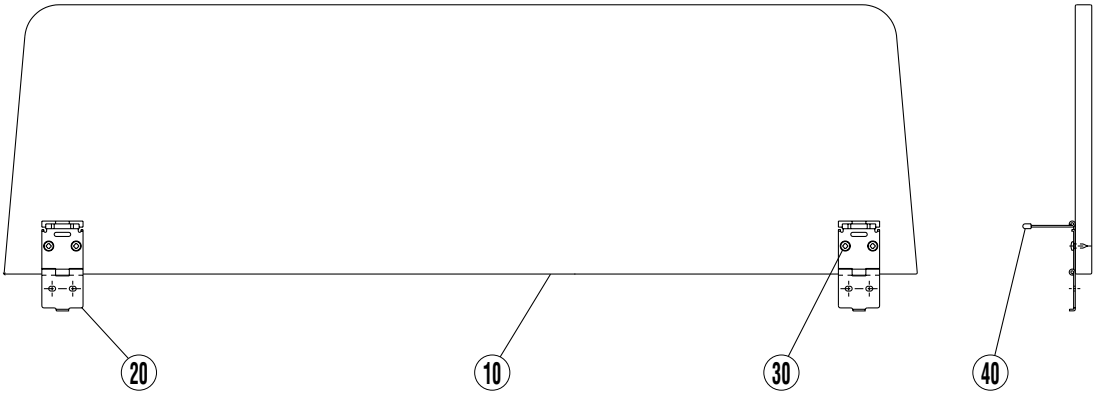

REF NO.	PART NO.	DESCRIPTION			REMARKS	QTY	RANK
	VV296400	MUSIC REST ASSEMBLY			CVP-700		20
10	**- -**	Music Rest			(VV70060)		
20	**VD255900**	Hinge				2	07
30	**EP030320**	Bind Head Tapping Screw-1	3.5X10 MFZN2BL			4	01
40	**CB054920**	Cap	BL			2	01

⋆: New Parts

RANK: Japan only

SIDE COVER ASSEMBLY

• **Top view**

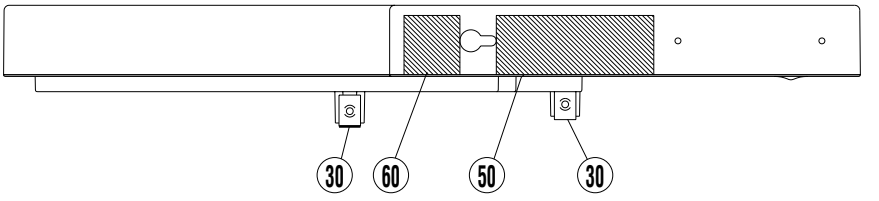

• **Side view**

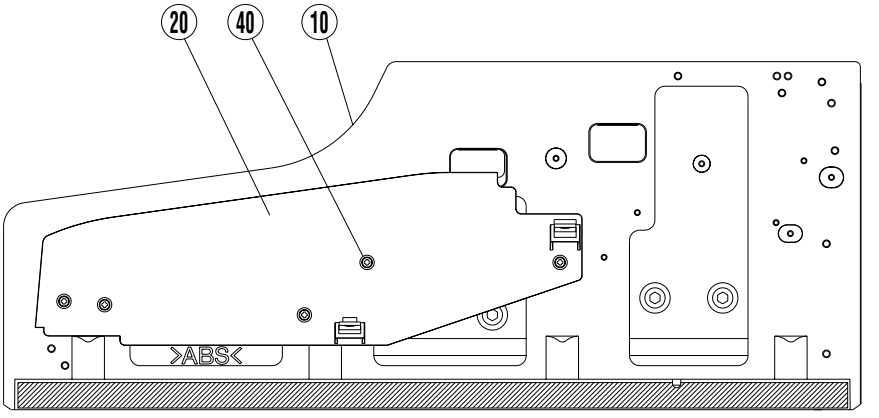

• **Front view**

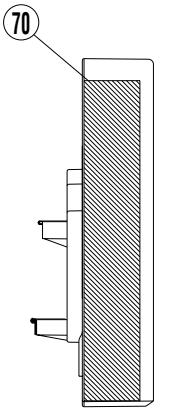

• **Side Cover Assembly (L)**

REF NO.	PART NO.	DESCRIPTION			REMARKS	QTY	RANK
	V2804600	SIDE COVER ASSEMBLY	LEFT		CVP-700		20
10	**- -**	Side Cover	LEFT		(VV30350)		
20	**V2794400**	Inner Cap Assembly	LEFT				06
30	**VV435100**	Nut	M4 WUSN-4039			2	01
40	**VE683000**	Bind Head Tapping Screw-B	3.0X12 MFZN2Y			5	01
50	**VY683900**	Dust Proof Cloth A	93X35X0.2				03
60	**VY684000**	Dust Proof Cloth B	35X33X0.2				03
70	**- -**	Dust Proof Cloth C	0.25X189X33		(VY84160)		
80	**- -**	Dust Proof Cloth	15X490X0.25		(V315000)		
90	**- -**	Dust Proof Cloth	240X5X0.25		(V327900)		

⋆: New Parts RANK: Japan only

• **Side Cover Assembly (R)**

REF NO.	PART NO.	DESCRIPTION			REMARKS	QTY	RANK
	V2804700	SIDE COVER ASSEMBLY	RIGHT		CVP-700		21
10	**- -**	Side Cover	RIGHT		(V287700)		
20	**V2794500**	Inner Cap Assembly	RIGHT				06
30	**VV435100**	Nut	M4 WUSN-4039			2	01
40	**VE683000**	Bind Head Tapping Screw-B	3.0X12 MFZN2Y			5	01
50	**VY683900**	Dust Proof Cloth A	93X35X0.2				03
60	**VY684000**	Dust Proof Cloth B	35X33X0.2				03
70	**- -**	Dust Proof Cloth C	0.25X189X33		(VY84160)		
80	**- -**	Dust Proof Cloth	15X490X0.25		(V315000)		
90	**- -**	Dust Proof Cloth	240X5X0.25		(V327900)		

⋆: New Parts RANK: Japan only

RACK ASSEMBLY

• Top view

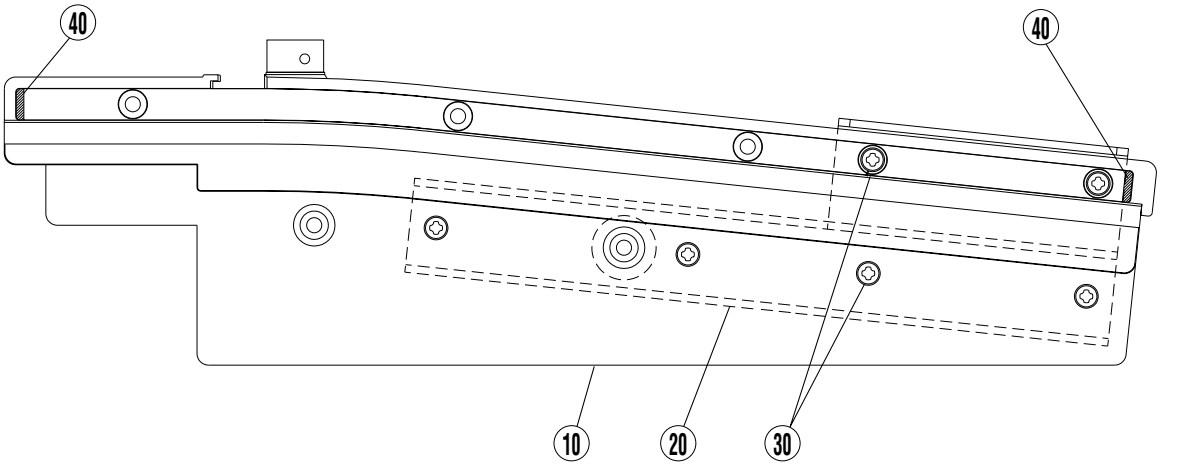

• Rack Assembly (L)

REF NO.	PART NO.	DESCRIPTION			REMARKS	QTY	RANK
	V2826100	RACK ASSEMBLY	LEFT		CVP-700		8
10	**- -**	Rack Rail	LEFT		(V279420)		
20	**- -**	Support Angle	LEFT		(V287680)		
30	**EP600250**	Bind Head Tapping Screw-B	3.0X8 MFZN2Y			6	01
40	**- -**	Felt	8.5X6X2 JIS2 BL		(VP47880)	2	

⋆: New Parts RANK: Japan only

• Rack Assembly (R)

REF NO.	PART NO.	DESCRIPTION			REMARKS	QTY	RANK
	V2826200	RACK ASSEMBLY	RIGHT		CVP-700		08
10	**- -**	Rack Rail	RIGHT		(V279430)		
20	**- -**	Support Angle	RIGHT		(V287690)		
30	**EP600250**	Bind Head Tapping Screw-B	3.0X8 MFZN2Y			6	01
40	**- -**	Felt	8.5X6X2 JIS2 BL		(VP47880)	2	

⋆: New Parts RANK: Japan only

END BLOCK ASSEMBLY

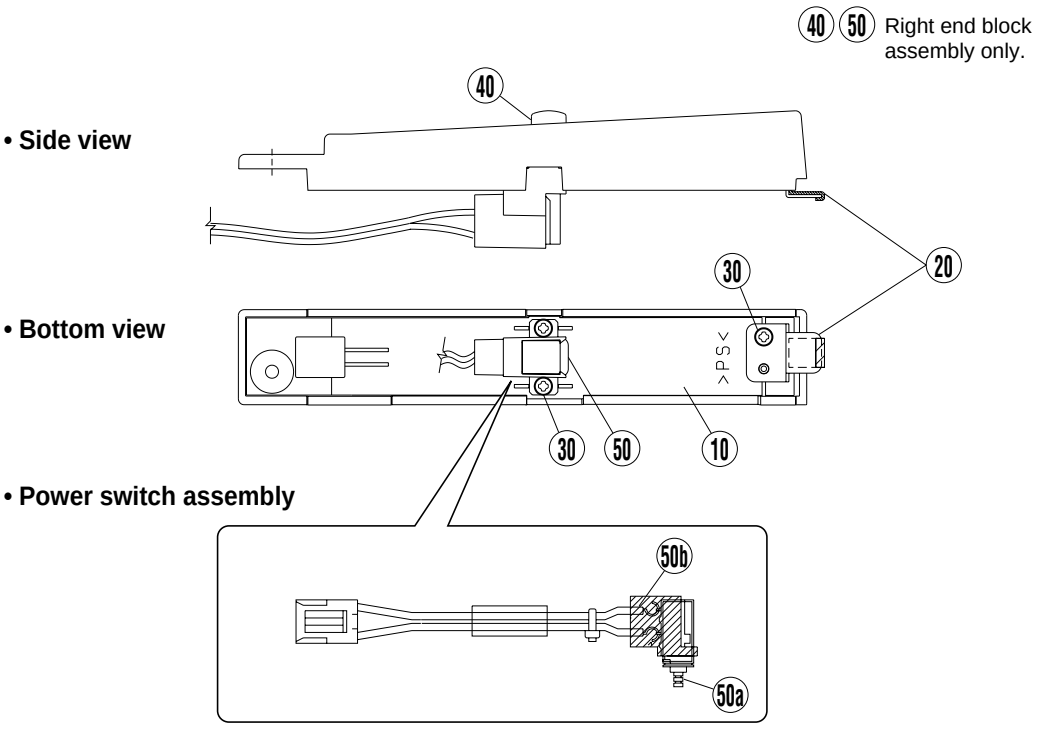

• End Block Assembly (L)

REF NO.	PART NO.	DESCRIPTION			REMARKS	QTY	RANK
	- -	END BLOCK ASSEMBLY	LEFT		CVP-700 (VV60330)		
10	**VV599700**	End Block	LEFT				06
20	**VL732000**	Holder Assembly					04
30	**EP600190**	Bind Head Tapping Screw-B	3.0X8 MFZN2BL				01

⋆: New Parts RANK: Japan only

• End Block Assembly (R)

REF NO.	PART NO.	DESCRIPTION			REMARKS	QTY	RANK
	- -	END BLOCK ASSEMBLY	RIGHT		CVP-700 (VV60320)		
10	**VV599600**	End Block	RIGHT				06
20	**VL732000**	Holder Assembly					04
30	**EP600190**	Bind Head Tapping Screw-B	3.0X8 MFZN2BL			3	01
40	**VF663400**	Knob	BL				02
50	- -	Connector Assembly	PSW		(VV65000)		
50a	**VC843500**	Push Switch	SDDLB1216A J.U.C.S		POWER		03
50b	**CB049980**	Switch Cover	BL				01

⋆: New Parts RANK: Japan only

FRONT RAIL ASSEMBLY

• Top view

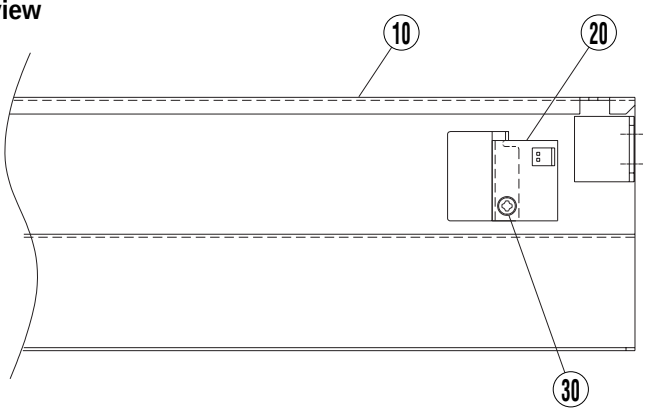

• Side view

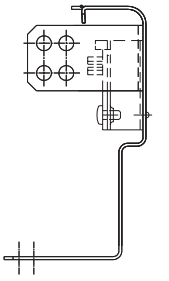

REF NO.	PART NO.	DESCRIPTION			REMARKS	QTY	RANK
	- -	FRONT RAIL ASSEMBLY			CVP-700 (V449090)		
10	- -	Front Rail			(V449080)		
20	**VN637600**	Circuit Board	PL				05
30	**EP600230**	Bind Head Tapping Screw-B	3.0X6 MFZN2BL				01

⋆: New Parts

RANK: Japan only

FLOPPY DISK DRIVE ASSEMBLY

• Top view

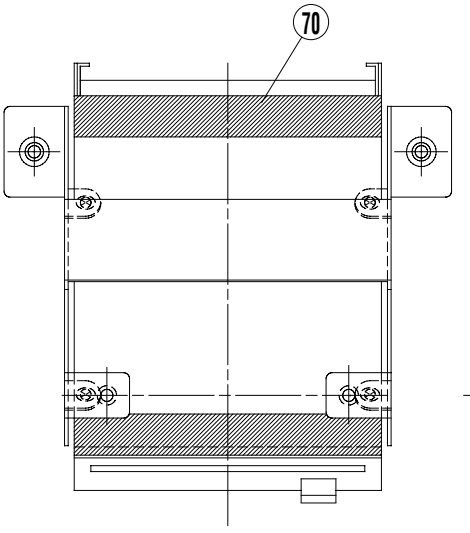

• Side view

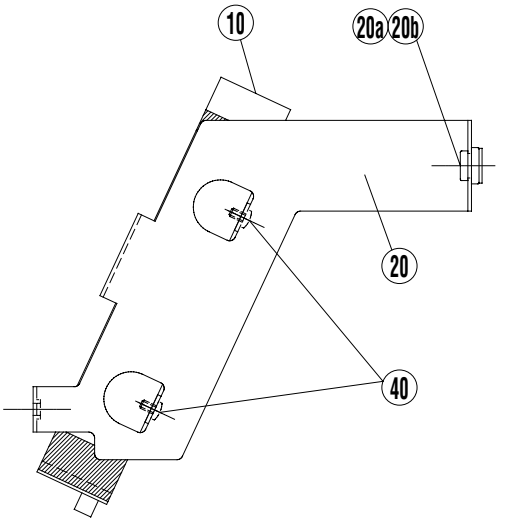

REF NO.	PART NO.	DESCRIPTION			REMARKS	QTY	RANK
	- -	FLOPPY DISK DRIVE ASSEMBLY			CVP-700 (V426770)		
10	**V3075300**	Floppy Disk Drive	MF355F-3252MG F				16
20	**VZ337200**	Holder Assembly					09
20a	**VA121600**	Bushing				2	01
20b	**VA121400**	Spacer				2	02
40	**EG330150**	Bind Head Screw	3.0X5 MFZN2Y			4	01
70	- -	Adhesive Tape	#5 15X30M BL		(V256440)		

⋆: New Parts

RANK: Japan only

JACK ASSEMBLY

• Side view • Front view

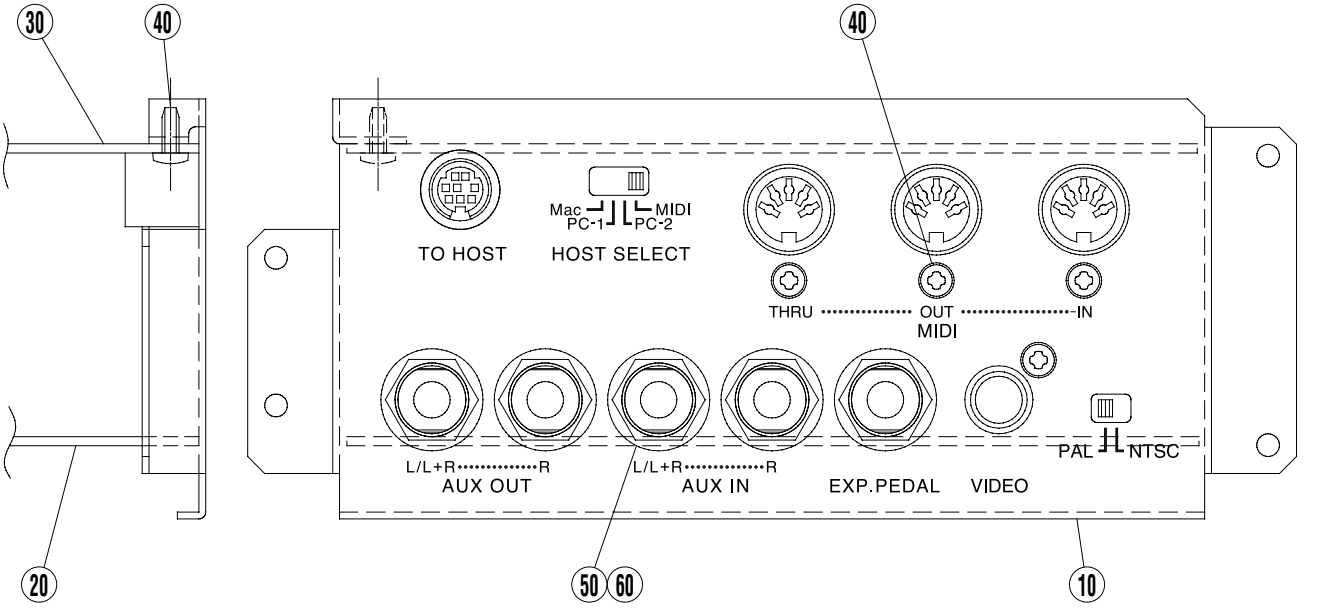

REF NO.	PART NO.	DESCRIPTION			REMARKS	QTY	RANK
	- -	JACK ASSEMBLY			CVP-700 (V447960)		
10	**V3423100**	Plate, Jack					
* 20	**V4472300**	Circuit Board	EQ-JACK				
30	**VU415700**	Circuit Board	JACK1				13
40	**EP600190**	Bind Head Tapping Screw-B	3.0X8 MFZN2BL			5	01
50	**VB508600**	Hexagonal Nut	12.0 14X2 MFZN2BL			5	01
60	**VJ869400**	Washer	BL			5	02

*: New Parts

RANK: Japan only

FU120L ASSEMBLY

• **Top view**

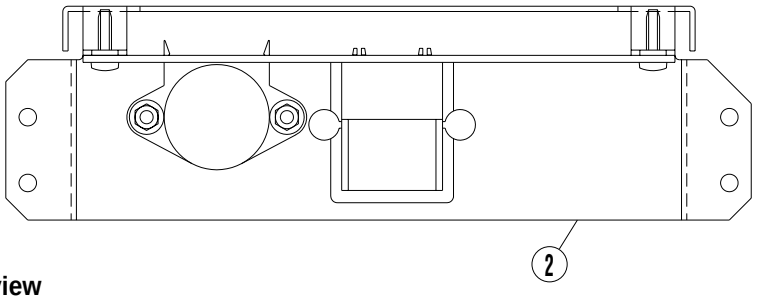

• **Front view**

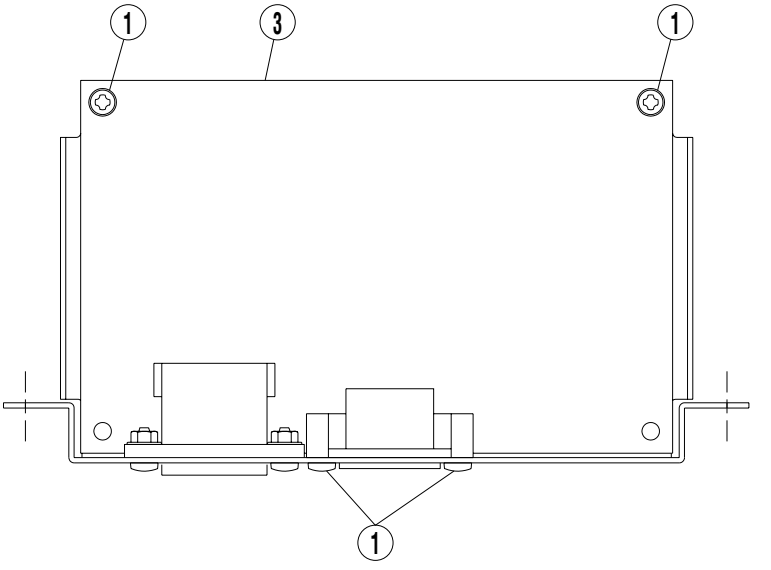

REF NO.	PART NO.	DESCRIPTION			REMARKS	QTY	RANK
		FU120L ASSEMBLY			CVP-700		
	VV651300	FU120L Assembly			U		
	VV651400	FU120L Assembly			E		13
1	**EP600190**	Bind Head Tapping Screw-B	3.0X8 MFZN2BL			4	01
2	**VV605700**	Panel, AC Inlet					07
3	**- -**	Circuit Board	FU120L		U (VV65020)		
3	**- -**	Circuit Board	FU120L		E (VV65040)		

∗: New Parts

RANK: Japan only

MA120 ASSEMBLY

• **Top view**

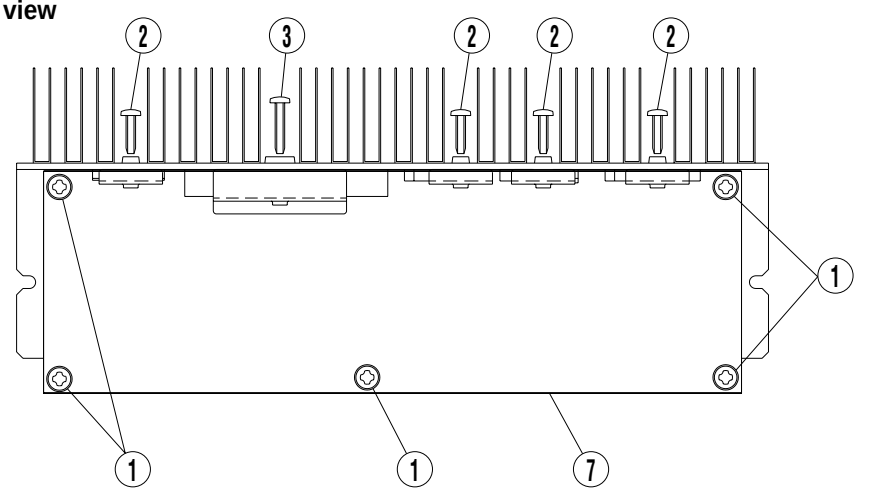

• **Front view**

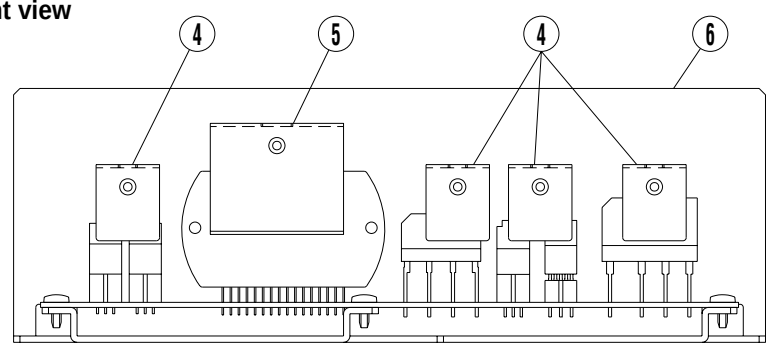

REF NO.	PART NO.	DESCRIPTION			REMARKS	QTY	RANK
		MA120 ASSEMBLY			CVP-700		
	VT492000	MA120 Assembly			U		23
	VT492100	MA120 Assembly			E		23
1	**EP640410**	Bind Head Tapping Screw-B	4.0X8 MFZN2Y			5	01
2	**EP600220**	Bind Head Tapping Screw-B	3.0X10 MFZN2Y			4	01
3	**EP600390**	Bind Head Tapping Screw-B	3.0X16 MFZN2Y				01
4	**VT461100**	Transistor Holder	A			4	03
5	**VT461200**	Transistor Holder	B				03
6	**VT444300**	Heat Sink					11
7	**- -**	Circuit Board	MA120		U (VT14320)		
7	**- -**	Circuit Board	MA120		E (VT14330)		

⋆: New Parts

RANK: Japan only

MIC. & PHONES UNIT

• **Bottom view**

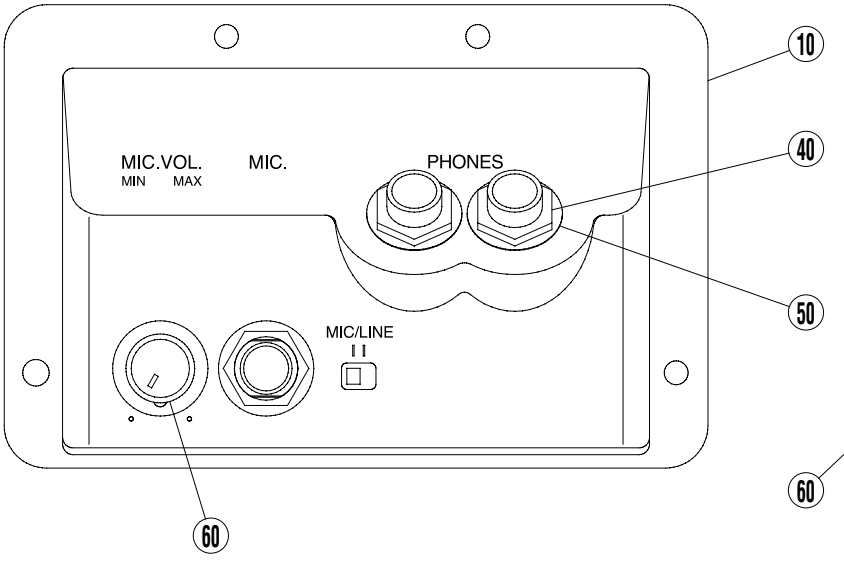

• **Side view**

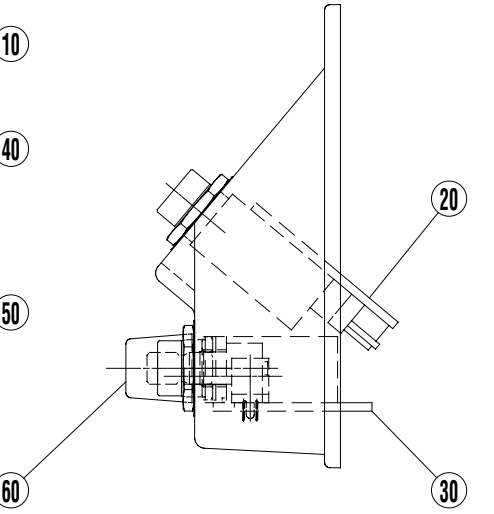

REF NO.	PART NO.	DESCRIPTION			REMARKS	QTY	RANK
	- -	MIC. & PHONES UNIT			CVP-700 (V342250)		
10	**V3422600**	Cover, Mic. & Phones					
20	**VT478400**	Circuit Board	HP				10
30	**V3135900**	Circuit Board	MIC				10
40	**VB508600**	Hexagonal Nut	12.0 14X2 MFZN2BL			3	01
50	**VJ869400**	Washer	BL			3	02
60	**CB028970**	Knob	BL		MIC.VOL.		03

⋆: New Parts

RANK: Japan only

LCD ASSEMBLY

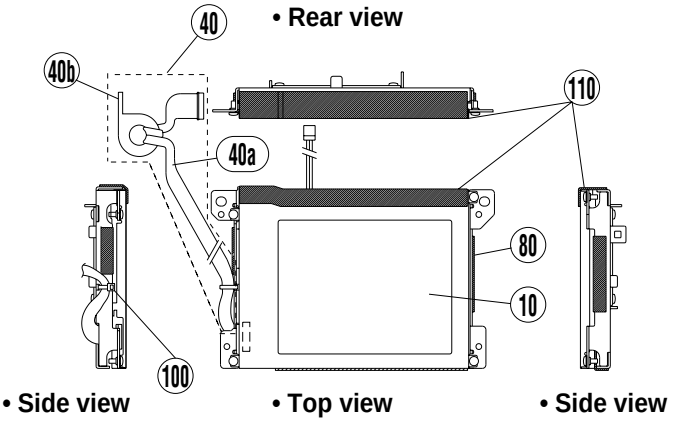

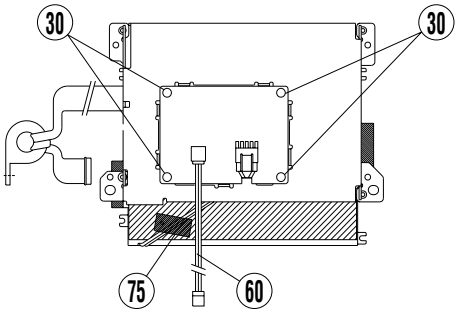

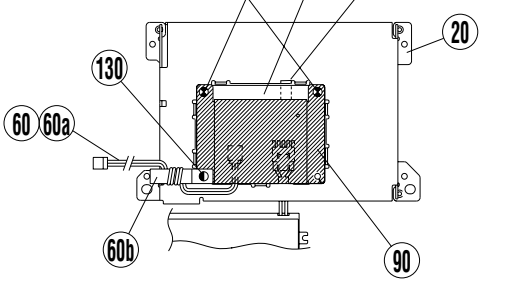

REF NO.	PART NO.	DESCRIPTION			REMARKS	QTY	RANK
		LCD ASSEMBLY			CVP-700		
*	**V4447000**	LCD Assembly			U		
	V3425100	LCD Assembly			E		
10	**- -**	LCD	EDMMPU3BCF		(V333130)		
20	**VV615000**	Angle Bracket, LCD					08
30	**EP600250**	Bind Head Tapping Screw-B	3.0X8 MFZN2Y		U	6	01
30	**EP600250**	Bind Head Tapping Screw-B	3.0X8 MFZN2Y		E	8	01
40	**- -**	Connector Assembly	LCD-LF		(V374860)		
40a	**- -**	Connector Assembly	LCD		(VV64870)		
40b	**VD947800**	Data Line Filter	ESD-R-25D-B		}		05
40b	**V3122900**	Data Line Filter	NFT-25		}		
50	**VY638900**	Circuit Board	INV				13
60	**- -**	Connector Assembly	BLT-LF		U (VZ01770)		
60a	**- -**	Connector Assembly	B. LIGHT L=500		U (VZ36370)		
60b	**VD947800**	Data Line Filter	ESD-R-25D-B		U		05
60	**- -**	Connector Assembly	B. LIGHT L=380		E (VV64880)		
75	**VA119300**	Adhesive Tape	12X25				01
80	**VY859400**	Aluminum Sheet					06
90	**VT361300**	Inverter Cover			U		06
100	**CB069250**	Cord Holder	BK-1				01
110	**- -**	Aluminum Tape	AT-80 30X50m		(VY85950)		
120	**- -**	Spacer Cushion	LC3000#2N		(VZ01110)		
130	**EP600140**	Bind Head Tapping Screw-B	3.0X10 MFZN2BL		U		01

*: New Parts

RANK: Japan only

KEYBOARD ASSEMBLY

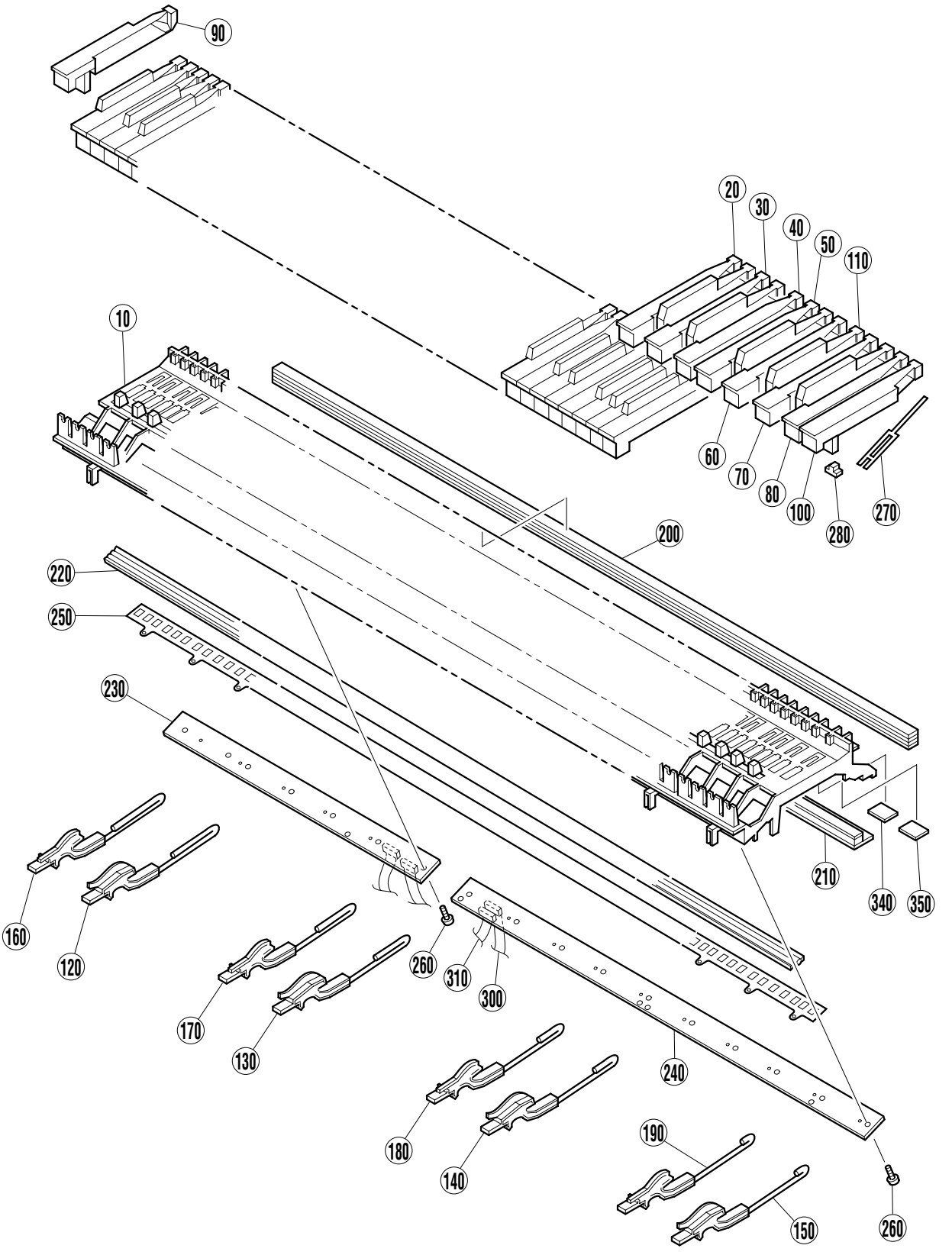

REF NO.	PART NO.	DESCRIPTION			REMARKS	QTY	RANK
	VU431800	KEYBOARD ASSEMBLY	GH A88 K6		CVP-700		55
10	**- -**	MK Frame			(VU42210)		
20	**VU10100**	White Key	C			7	05
30	**VU101100**	White Key	D			7	05
40	**VU101200**	White Key	E			7	05
50	**VU101300**	White Key	F			7	05
60	**VU101400**	White Key	G			7	05
70	**VU101500**	White Key	A			7	05
80	**VU101600**	White Key	B			8	05
90	**VU101700**	White Key	A'				05
100	**VU101800**	White Key	C'				05
110	**VU102100**	Black Key	BL			36	05
120	**VU102200**	Hammer, White Key	1		A-1...F1	13	06
130	**VU102300**	Hammer, White Key	2		G1...E3	13	06
140	**VU102400**	Hammer, White Key	3		F3...D5	13	06
150	**VU102500**	Hammer, White Key	4		E5...C7	13	06
160	**VU102600**	Hammer, Black Key	1		A#-1...F#1	9	06
170	**VU102700**	Hammer, Black Key	2		G#1...D#3	9	06
180	**VU102800**	Hammer, Black Key	3		F#3...C#5	9	06
190	**VU102900**	Hammer, Black Key	4		D#5...A#6	9	06
200	**VU342100**	Stopper	U88				09
210	**VU342200**	Stopper	L88				09
220	**VY693500**	Rubber Contact	GH A88 2M				11
230	**VU342300**	Circuit Board	AEXL88L				12
240	**VU342400**	Circuit Board	AEXL88H				13
250	**VU266500**	Insulation Spacer	AEX88				06
260	**VT413400**	Bind Head Tapping Screw-P	3.0X10 MFZN2			17	01
270	**VZ417900**	Spring	GH R WH/BL		}	88	03
270	**V2798500**	Spring	GH R WH/BL		}	88	
280	**VU237500**	Rubber			}	88	03
280	**V2211300**	Rubber			}	88	03
290	**- -**	Grease	PG-661		(VU34200)		
300	**VU341800**	Connector Assembly	9P BLOCK				06
310	**VU341900**	Connector Assembly	12P NOTE				07
340	**VV467900**	Stopper Support	A 35.5X20				03
350	**VV468100**	Stopper Support	B 24X20			12	03

*: New Parts

RANK: Japan only

SPEAKER BOX ASSEMBLY

• Top view

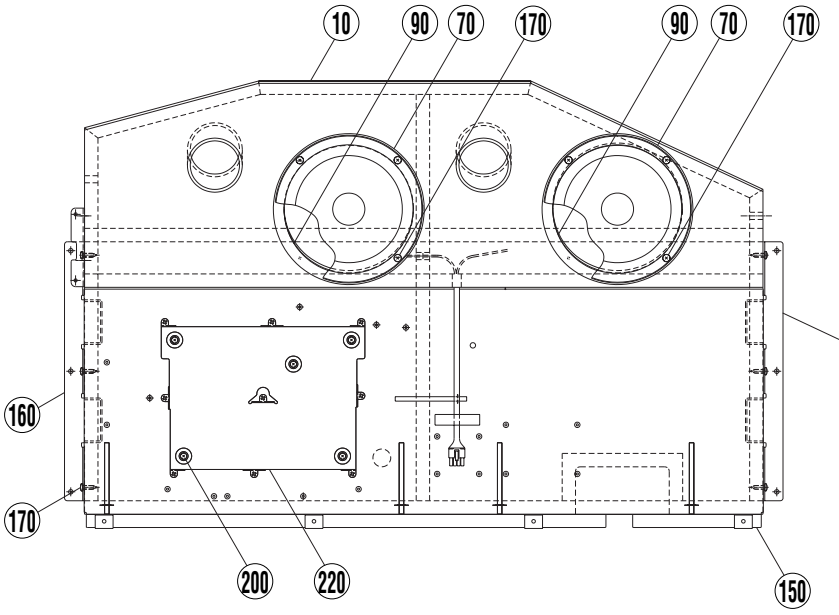

• Right side view

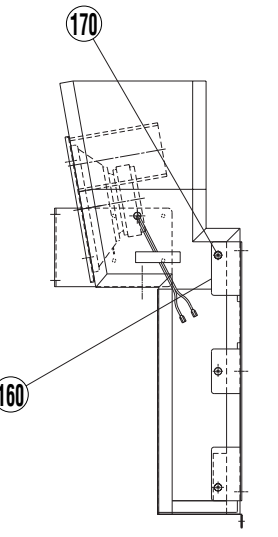

• Left side view

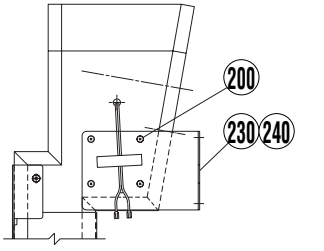

	REF NO.	PART NO.	DESCRIPTION			REMARKS	QTY	RANK
*		**V4749100**	SPEAKER BOX ASSEMBLY			CVP-700		
	10	**- -**	Speaker Box			(V474930)		
	70	**XQ797A00**	Speaker	16cm 8ohm 60W		WOOFER	2	12
	90	**- -**	Cushion	460X10XT1		(V315180)	2	
	150	**- -**	Shield Assembly			(V300930)		
	160	**V2878800**	SP Box Holder				2	05
	170	**EP040250**	Bind Head Tapping Screw-1	4.0X16 MFZN2BL			14	01
	200	**EP030340**	Bind Head Tapping Screw-1	3.5X12 MFZN2BL			9	01
	220	**VV604800**	DM Holder					06
*	230	**V4760600**	Holder					
	240	**- -**	Cushion	50X23X2		(V322710)		

*: New Parts

RANK: Japan only

PEDAL BOX ASSEMBLY

•Side view

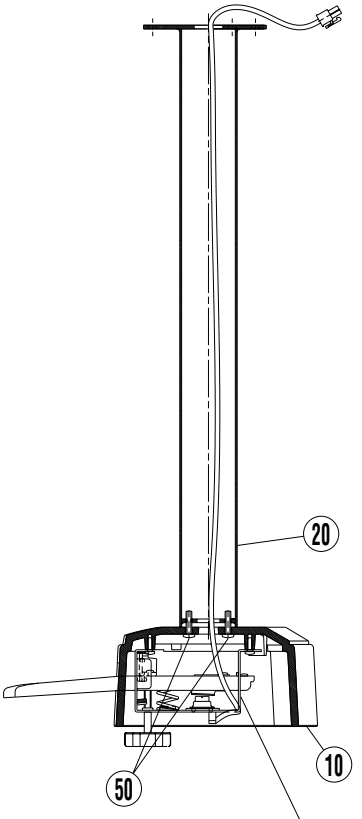

Pedal assembly
(See Page 26.)

• Top view

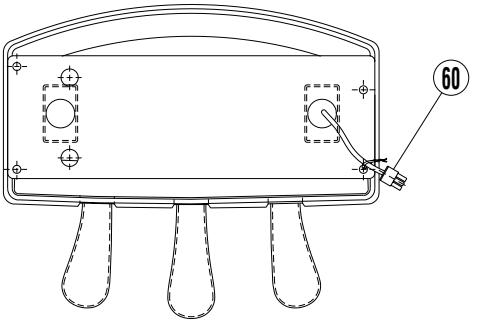

• Bottom view

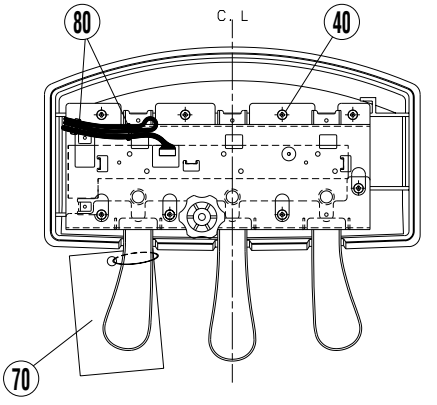

REF NO.	PART NO.	DESCRIPTION			REMARKS	QTY	RANK
	- -	PEDAL BOX ASSEMBLY			CVP-700 (V280770)		
10	**VV303800**	Pedal Box					13
20	**V2807600**	Pedal Pole					17
30	**VV904000**	Pedal Assembly	(D)				18
40	**VA914400**	Bind Head Tapping Screw-B	4.0X12 MFZN2Y			8	01
50	**VB857600**	Bind Head Screw	5.0X20 MFZN2BL			4	01
60	**VU891300**	Cord Binder	L80				03
70	- -	Caution Label			(VD96610)		
80	**CB069250**	Cord Holder	BK-1			2	01

⋆: New Parts

RANK: Japan only

PEDAL ASSEMBLY

• Top view

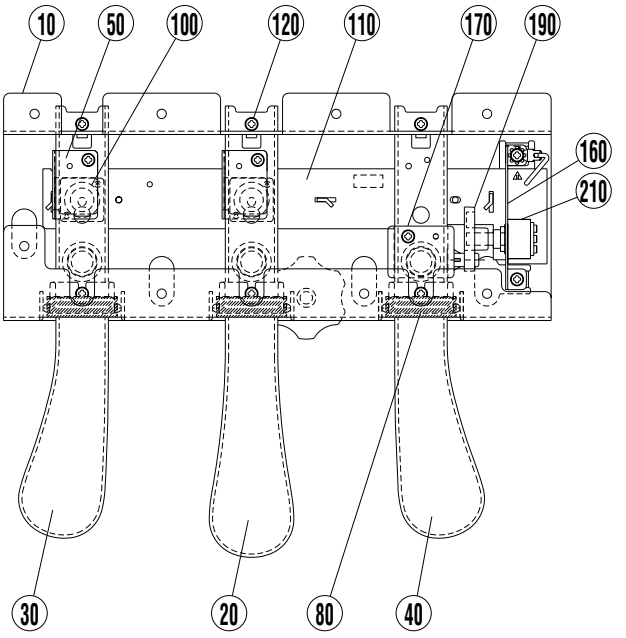

• Side view

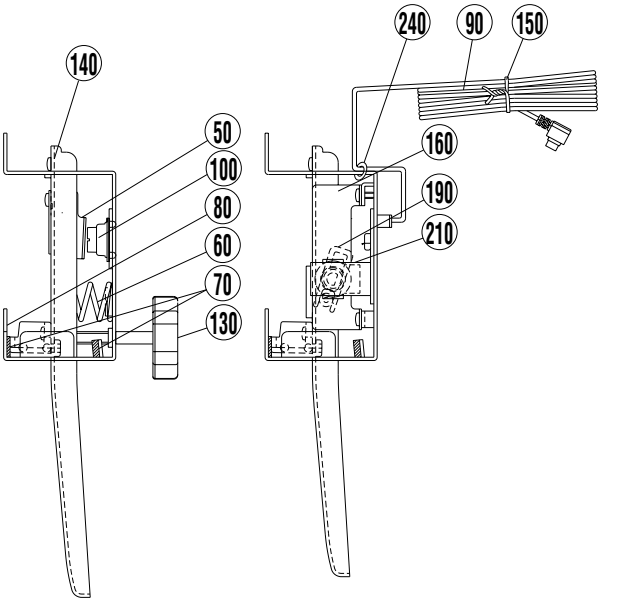

REF NO.	PART NO.	DESCRIPTION			REMARKS	QTY	RANK
	VV904000	PEDAL ASSEMBLY	(D)		CVP-700		18
10	**VU339700**	Pedal Frame					09
20	**VU362000**	Pedal Piece	CENTER		SOSTENUTO		08
30	**VU362100**	Pedal Piece	LEFT		SOFT		08
40	**VU362200**	Pedal Piece	RIGHT		DAMPER		08
50	**VV433500**	Actuator	PEDAL			2	03
60	**VP348100**	Pedal Spring				3	03
70	**VU346500**	Felt	PA BL			6	03
80	**VU339800**	Shutter	PEDAL			3	03
90	**VV884700**	Connector Assembly	PK				09
100	**VU456000**	Rubber Contact	1 DOME			2	03
110	**VZ151300**	Circuit Board	PEDAL				07
120	**EP600190**	Bind Head Tapping Screw-B	3.0X8 MFZN2BL			11	01
130	**VU379700**	Adjuster					02
140	**- -**	Grease	G-31KA		(VE96850)		
150	**CB033610**	Cord Binder	L=160				01
160	**VU455600**	Holder, VR	PEDAL				03
170	**VV475800**	VR Holder	PEDAL				03
190	**VV476000**	VR Actuator	PEDAL				03
210	**VZ151400**	Circuit Board	PEDAL VR				07
240	**CB069250**	Cord Holder	BK-1				01
250	**VP834600**	Adhesive Tape	12X50				02

⋆: New Parts

RANK: Japan only

BENCH

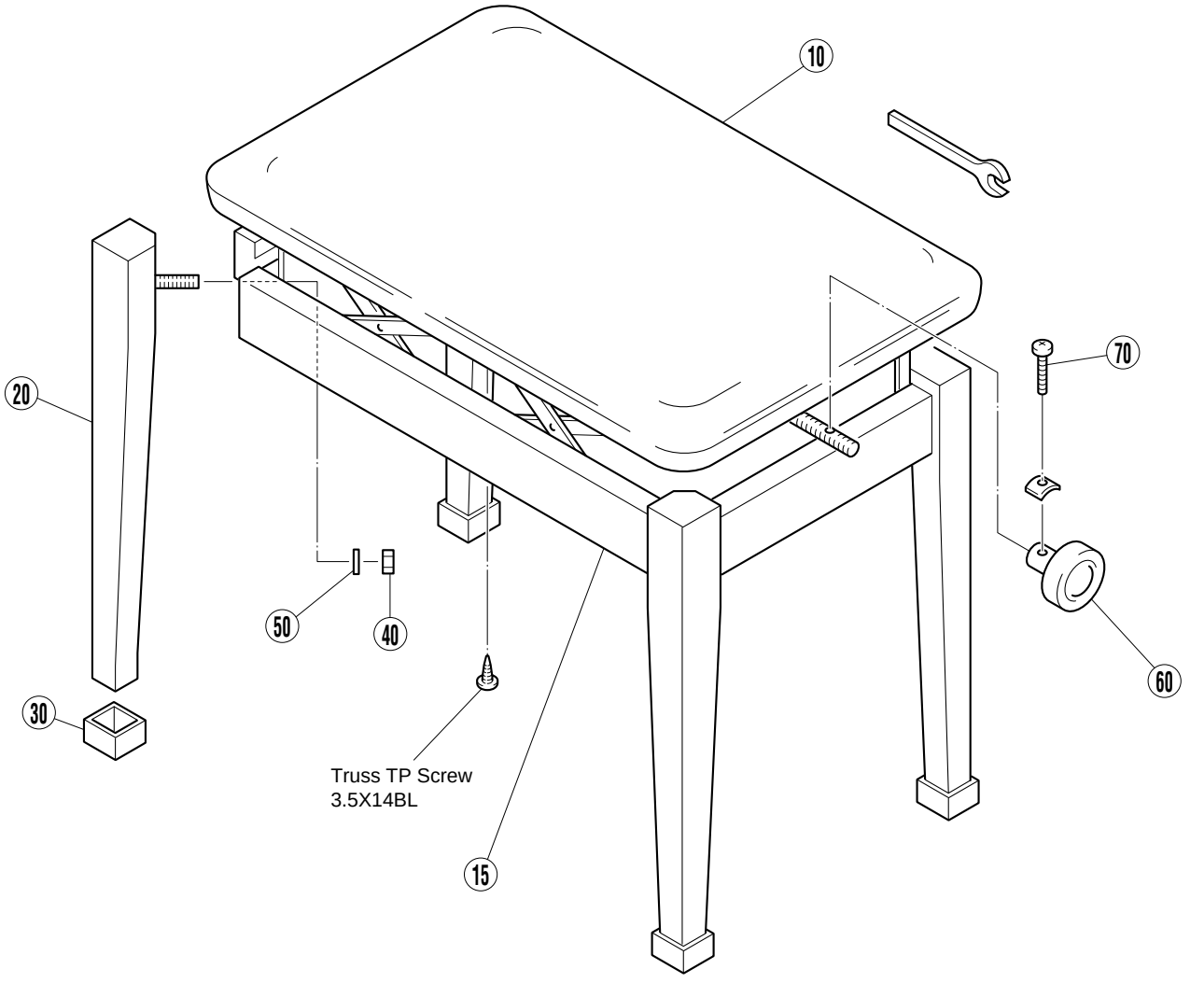

REF NO.	PART NO.	DESCRIPTION			REMARKS	QTY	RANK
	- -	BENCH	BC-15		CVP-700 (VY80710)		
10	**NX007750**	Bench Board Assembly					
15	- -	Lift Assembly			(AX01011)		
20	**AX817680**	Leg Assembly				4	15
30	**CX816010**	Cap Assembly				4	03
40	**EX001060**	Hexagonal Nut	#1 10.0X1.25 ZMC2Y			4	01
50	**EX001050**	Spring Washer	#2 M10 ZMC2Y			4	01
60	**CX816020**	Knob					07
70	**VL064000**	Pan Head Tapping Screw-S	40X20 BL				01
		JIGS					
	VT655900	Wrench					05

⋆: New Parts

RANK: Japan only

ELECTRICAL PARTS

	REF NO.	PART NO.	DESCRIPTION			REMARKS	QTY	RANK
			ELECTRICAL PARTS			CVP-700		
		VU342400	Circuit Board	AEXL88H		(XR776C0)		13
		VU342300	Circuit Board	AEXL88L		(XR775C0)		12
*		**V4997600**	Circuit Board	DM		(XV562D0)		
*		**V4472300**	Circuit Board	EQ-JACK		(XV484C0)		
		- -	Circuit Board	FU120L		U (VV65020)(XS822A0)		
		- -	Circuit Board	FU120L		E (VV65040)(XS822A0)		
		VT478400	Circuit Board	HP		(XQ795A0)		10
		VY638900	Circuit Board	INV		(XT122A0)		13
		VU415700	Circuit Board	JACK1		(XR598E0)		13
		- -	Circuit Board	MA120		U (VT14320)(XQ393E0)		
		- -	Circuit Board	MA120		E (VT14330)(XQ393E0)		
		V3135900	Circuit Board	MIC		(XV507C0)		10
		V3135500	Circuit Board	MV		(XV483A0)		10
		V3135400	Circuit Board	PNGL		(XV483A0)		10
		V3135300	Circuit Board	PNGR		(XV483A0)		10
		V3134900	Circuit Board	PNR		(XV483A0)		12
		V2455000	Circuit Board	NETWORK		(XV011A0)		11
*		**V4757300**	Circuit Board	NW1		(XT123B0)		
		VZ151300	Circuit Board	PEDAL		(XR780B0)		07
		VZ151400	Circuit Board	PEDAL VR		(XR780B0)		07
		VN637600	Circuit Board	PL		(XL151B0)		05
		VV880100	Circuit Board	PNGC		(XS977A0)		11
		V3134500	Circuit Board	PNL		(XV482A0)		
		VU342400	Circuit Board	AEXL88H		(XR776C0)		13
		VB390500	Connector Base Post	PH- 9P TE				03
		VB390800	Connector Base Post	PH-12P TE				01
		VB941200	Diode	1SS133,1SS176				01
		- -	Dust Proof Cloth			(VU45980)		
		VU342300	Circuit Board	AEXL88L		(XR775C0)		12
		XR632A00	IC	YMZ702-D		KSN2		09
		VB390400	Connector Base Post	PH- 8P TE				01
		VB390500	Connector Base Post	PH- 9P TE				03
		VB390800	Connector Base Post	PH-12P TE				01
		VB941200	Diode	1SS133,1SS176				01
		- -	Dust Proof Cloth			(VU45960)		
	C1	**FG644100**	Ceramic Capacitor-F	0.0100 50V Z				01
	-3	**FG644100**	Ceramic Capacitor-F	0.0100 50V Z				01
	C5	**VF760000**	Electrolytic Capacitor	100.00 10.0V				01
	CL1	**VI653000**	Ceramic Resonator	CST4.00MGW040				01
	J1	**VD041700**	Jumper Wire	0.55				
	J2	**VD041700**	Jumper Wire	0.55				
	R1	**HF759100**	Carbon Resistor	1.0M 1/4 J				01
	R2	**HF755100**	Carbon Resistor	100.0 1/4 J				01
	R3	**HF755100**	Carbon Resistor	100.0 1/4 J				01
	R4	**HF756100**	Carbon Resistor	1.0K 1/4 J				01
	RA1	**VU483500**	Resistor Array	RGLD12X103J				01
*		**V4997600**	Circuit Board	DM		(XV562D0)		
		VK863100	IC Socket	DICF-42CS-E			4	03
	C0001	**US061220**	Ceramic Capacitor-CH(chip)	22P 50V J				01
	C0002	**US061220**	Ceramic Capacitor-CH(chip)	22P 50V J				01
	C0003	**US062470**	Ceramic Capacitor-SL(chip)	470P 50V J				01
	C0004	**US135100**	Ceramic Capacitor-F (chip)	0.1000 16V Z				01
	C0005	**US061150**	Ceramic Capacitor-CH(chip)	15P 50V J				01
	C0006	**US061180**	Ceramic Capacitor-CH(chip)	18P 50V J				
	C0007	**US061180**	Ceramic Capacitor-CH(chip)	18P 50V J				
	C0008	**US061150**	Ceramic Capacitor-CH(chip)	15P 50V J				01
	C0009	**US060500**	Ceramic Capacitor-CH(chip)	5P 50V C				01
	C0010	**US060500**	Ceramic Capacitor-CH(chip)	5P 50V C				01
	C0011	**US064100**	Ceramic Capacitor-B (chip)	0.0100 50V K				01
	-0020	**US064100**	Ceramic Capacitor-B (chip)	0.0100 50V K				01
	C0021	**US135100**	Ceramic Capacitor-F (chip)	0.1000 16V Z				01
	-0023	**US135100**	Ceramic Capacitor-F (chip)	0.1000 16V Z				01
	C0024	**UF118330**	Electrolytic Cap. (chip)	330 6.3V UUR0J3				01
	C0025	**US064100**	Ceramic Capacitor-B (chip)	0.0100 50V K				01
	-0037	**US064100**	Ceramic Capacitor-B (chip)	0.0100 50V K				01
	C0050	**US064100**	Ceramic Capacitor-B (chip)	0.0100 50V K				01

*: New Parts

RANK: Japan only

REF NO.	PART NO.	DESCRIPTION			REMARKS	QTY	RANK
C0051	**US063100**	Ceramic Capacitor-B (chip)	1000P 50V K				01
C0052	**UF057100**	Electrolytic Cap. (chip)	10 35V				01
C0053	**UF047100**	Electrolytic Cap. (chip)	10 25V				01
C0054	**US135100**	Ceramic Capacitor-F (chip)	0.1000 16V Z				01
C0055	**US135100**	Ceramic Capacitor-F (chip)	0.1000 16V Z				01
C0056	**US062100**	Ceramic Capacitor-SL(chip)	100P 50V J				01
-0066	**US062100**	Ceramic Capacitor-SL(chip)	100P 50V J				01
C0067	**US064100**	Ceramic Capacitor-B (chip)	0.0100 50V K				01
C0068	**UF148100**	Electrolytic Cap. (chip)	100 25V UUR1E1				01
C0069	**US064100**	Ceramic Capacitor-B (chip)	0.0100 50V K				01
C0070	**UF017220**	Electrolytic Cap. (chip)	22 6.3V				01
C0071	**UF017220**	Electrolytic Cap. (chip)	22 6.3V				01
C0072	**UF017470**	Electrolytic Cap. (chip)	47 6.3V				01
C0073	**UF017470**	Electrolytic Cap. (chip)	47 6.3V				01
C0074	**UF038100**	Electrolytic Cap. (chip)	100 16V				01
-0079	**UF038100**	Electrolytic Cap. (chip)	100 16V				01
C0080	**US064100**	Ceramic Capacitor-B (chip)	0.0100 50V K				01
-0083	**US064100**	Ceramic Capacitor-B (chip)	0.0100 50V K				01
C0086	**US061270**	Ceramic Capacitor-CH(chip)	27P 50V J				01
-0090	**US061270**	Ceramic Capacitor-CH(chip)	27P 50V J				01
C0091	**US062100**	Ceramic Capacitor-SL(chip)	100P 50V J				01
C0092	**US062100**	Ceramic Capacitor-SL(chip)	100P 50V J				01
C0093	**US135100**	Ceramic Capacitor-F (chip)	0.1000 16V Z				01
C0094	**US135100**	Ceramic Capacitor-F (chip)	0.1000 16V Z				01
C0095	**US064100**	Ceramic Capacitor-B (chip)	0.0100 50V K				01
C0098	**US064100**	Ceramic Capacitor-B (chip)	0.0100 50V K				01
C0099	**UF037100**	Electrolytic Cap. (chip)	10 16V				01
C0100	**VI055000**	Super Capacitor	0.100F 5.5V FYD0H				04
C0101	**US064100**	Ceramic Capacitor-B (chip)	0.0100 50V K				01
-0142	**US064100**	Ceramic Capacitor-B (chip)	0.0100 50V K				01
C0145	**US064100**	Ceramic Capacitor-B (chip)	0.0100 50V K				01
-0147	**US064100**	Ceramic Capacitor-B (chip)	0.0100 50V K				01
C0148	**US135100**	Ceramic Capacitor-B (chip)	0.1000 16V Z				01
-0150	**US135100**	Ceramic Capacitor-B (chip)	0.1000 16V Z				01
C0151	**UF038100**	Electrolytic Cap. (chip)	100 16V				01
-0153	**UF038100**	Electrolytic Cap. (chip)	100 16V				01
C0156	**UF038100**	Electrolytic Cap. (chip)	100 16V				01
C0157	**UF037220**	Electrolytic Cap. (chip)	22 16V				01
C0158	**UF037100**	Electrolytic Cap. (chip)	10 16V				01
C0159	**UF038100**	Electrolytic Cap. (chip)	100 16V				01
C0160	**UF037100**	Electrolytic Cap. (chip)	10 16V				01
C0161	**UF038100**	Electrolytic Cap. (chip)	100 16V				01
C0163	**UF038100**	Electrolytic Cap. (chip)	100 16V				01
-0165	**UF038100**	Electrolytic Cap. (chip)	100 16V				01
C0166	**UF118220**	Electrolytic Cap. (chip)	220 6.3V UUR0J2				01
-0168	**UF118220**	Electrolytic Cap. (chip)	220 6.3V UUR0J2				01
C0169	**UF037220**	Electrolytic Cap. (chip)	22 16V				01
C0170	**US062100**	Ceramic Capacitor-SL(chip)	100P 50V J				01
-0180	**US062100**	Ceramic Capacitor-SL(chip)	100P 50V J				01
C0181	**UF118470**	Electrolytic Cap. (chip)	470 6.3V UUR0J4				01
C0182	**US061270**	Ceramic Capacitor-CH(chip)	27P 50V J				01
C0183	**US064100**	Ceramic Capacitor-B (chip)	0.0100 50V K				01
C0184	**US064100**	Ceramic Capacitor-B (chip)	0.0100 50V K				01
C0185	**US061470**	Ceramic Capacitor-CH(chip)	47P 50V J				01
-0188	**US061470**	Ceramic Capacitor-CH(chip)	47P 50V J				01
C0189	**US060500**	Ceramic Capacitor-CH(chip)	5P 50V C				01
C0190	**US135100**	Ceramic Capacitor-F (chip)	0.1000 16V Z				01
-0197	**US135100**	Ceramic Capacitor-F (chip)	0.1000 16V Z				01
C0198	**US061680**	Ceramic Capacitor-SL(chip)	68P 50V J				01
C0199	**US063100**	Ceramic Capacitor-B (chip)	1000P 50V K				01
C0200	**US064100**	Ceramic Capacitor-B (chip)	0.0100 50V K				01
C0201	**US135100**	Ceramic Capacitor-F (chip)	0.1000 16V Z				01
C0202	**US135100**	Ceramic Capacitor-F (chip)	0.1000 16V Z				01
C0203	**US064100**	Ceramic Capacitor-B (chip)	0.0100 50V K				01
C0204	**UF037100**	Electrolytic Cap. (chip)	10 16V				01
C0205	**UF066100**	Electrolytic Cap. (chip)	1 50V				01
-0208	**UF066100**	Electrolytic Cap. (chip)	1 50V				01
C0209	**US062150**	Ceramic Capacitor-SL(chip)	150P 50V J				01
C0210	**US063100**	Ceramic Capacitor-B (chip)	1000P 50V K				01
C0211	**US063100**	Ceramic Capacitor-B (chip)	1000P 50V K				01

⋆: New Parts

RANK: Japan only

REF NO.	PART NO.	DESCRIPTION			REMARKS	QTY	RANK
C0212	**UF037100**	Electrolytic Cap. (chip)	10 16V				01
C0213	**UF066100**	Electrolytic Cap. (chip)	1 50V				01
C0214	**UF037100**	Electrolytic Cap. (chip)	10 16V				01
-0216	**UF037100**	Electrolytic Cap. (chip)	10 16V				01
C0217	**US135100**	Ceramic Capacitor-F (chip)	0.1000 16V Z				01
-0220	**US135100**	Ceramic Capacitor-F (chip)	0.1000 16V Z				01
C0221	**US064100**	Ceramic Capacitor-B (chip)	0.0100 50V K				01
-0225	**US064100**	Ceramic Capacitor-B (chip)	0.0100 50V K				01
C0227	**US064100**	Ceramic Capacitor-B (chip)	0.0100 50V K				01
CN001	**VQ391300**	Connector	34P TE				03
CN002	**VV878100**	Connector Base Post	DF13-14P-1.25DSA				04
CN003	**LB918020**	Base Post Connector	XH 2P TE				01
CN005	**VB390300**	Connector Base Post	PH- 7P TE				01
CN006	**VB390200**	Connector Base Post	PH- 6P TE				01
CN007	**VB390300**	Connector Base Post	PH- 7P TE				01
CN008	**VB390400**	Connector Base Post	PH- 8P TE				01
CN009	**VE352600**	Connector Base Post	PH-14P TE				01
CN010	**VF283400**	Connector Base Post	PH-16P TE				01
CN011	**VB390100**	Connector Base Post	PH- 5P TE				01
D0001	**VB493900**	Diode	MA221				01
-0011	**VB493900**	Diode	MA221				01
EMI01	**FZ006970**	LC Filter	LS MT Y223NB				02
IC001	**XV599100**	IC	HD6437043AF12F		MAIN CPU		
IC002	**XS725A00**	IC	TC203C760HF-002		SWP30B		19
IC004	**XT013A00**	IC	YSS236-F		VOP3		13
IC005	**XV577200**	IC	MX23C1610PC-10		MASK ROM MAIN H 16M		
IC006	**XV578200**	IC	MX23C1610PC-10		MASK ROM MAIN L 16M		
IC007	**XV579100**	IC	KM23C32000CKFW4F93		MASK ROM DATA1 32M		
IC008	**XV580100**	IC	MX23C1610PC-10		MASK ROM DATA2 16M		
IC009	**XQ595A00**	IC	SED1335F0B		LCDC		08
IC010	**XI939A00**	IC	HD63266F		FDC		09
IC011	**XV584100**	IC	KM23C32000C		MASK ROM 32M WAVE1L		
IC012	**XV583100**	IC	KM23C32000C		MASK ROM 32M WAVE1H		
IC013	**XV586100**	IC	KM23C32000C		MASK ROM 32M WAVE2L		
IC014	**XV585100**	IC	KM23C32000C		MASK ROM 32M WAVE2H		
IC015	**XV513A00**	IC	MSM82C51A-2GS-KR1		USART		06
IC016	**XV510A00**	IC	AK5351-VF-E2		ADC		08
IC017	**XP551A00**	IC	PCM1702U/2K		DAC		08
IC018	**XP551A00**	IC	PCM1702U/2K		DAC		08
IC019	**XN431A00**	IC	CXA1645M-T6		RGB ENCORDER		06
IC020	**XV481B00**	IC	JG760082A		GATE ARRAY VIDEO OUT		
IC021	**XS681A00**	IC	M5M51008BFP-70LLT		SRAM 1M		11
IC021	**XV378A00**	IC	LP621024CM-70LL				07
* IC021	**XV378B00**	IC	LP621024DM-70LL				
IC021	**XV379A00**	IC	GM76C8128CLLFW-70				07
IC021	**XV976A00**	IC	M5M51008CFP-70H				07
IC022	**XS681A00**	IC	M5M51008BFP-70LLT		SRAM 1M		11
IC022	**XV378A00**	IC	LP621024CM-70LL				07
* IC022	**XV378B00**	IC	LP621024DM-70LL				
IC022	**XV379A00**	IC	GM76C8128CLLFW-70				07
IC022	**XV976A00**	IC	M5M51008CFP-70H				07
IC023	**XN279C00**	IC	M5M5256DFP-70LL		SRAM 256K		07
IC023	**XW433A00**	IC	CY62256LL-70SNCT				
IC024	**XU462A00**	IC	MSM514260C-60TS-K		DRAM 4M		08
-026	**XU462A00**	IC	MSM514260C-60TS-K		DRAM 4M		08
IC028	**XU462A00**	IC	MSM514260C-60TS-K		DRAM 4M		08
IC029	**XD835A00**	IC	SN74HC138NSR		DECODER		02
* IC029	**XW793A00**	IC	SN74HC138NSR				
IC030	**XD835A00**	IC	SN74HC138NSR		DECODER		02
* IC030	**XW793A00**	IC	SN74HC138NSR				
IC031	**XK452A00**	IC	HD74AC32FPEL		OR		02
IC032	**XD660A00**	IC	TC74HCU04AF-TP1		INVERTER		01
IC033	**XP003A00**	IC	TC74HC74AF		D-FF		01
IC034	**XU369A00**	IC	HD14069UBFP-EL		INVERTER		01
IC035	**XL112A00**	IC	SN74HC132NS-R		NAND		03
* IC035	**XW792A00**	IC	SN74HC132NSR				
IC036	**XJ598A00**	IC	NJM78L05UA		REGULATOR +5V		02
IC037	**XN086A00**	IC	NJM79L05UA		REGULATOR -5V		02
IC038	**XS516A00**	IC	UPC2933T-E1		REGULATOR +3.3V		03
IC040	**XF483A00**	IC	LB1443N		LED DRIVER		02

*: New Parts

RANK: Japan only

REF NO.	PART NO.	DESCRIPTION			REMARKS	QTY	RANK
IC041	**XF291A00**	IC	UPC4570G2		OP AMP		03
IC042	**XF291A00**	IC	UPC4570G2		OP AMP		03
J0005	**RD350000**	Carbon Resistor (chip)	0 63M J				01
J0007	**RD350000**	Carbon Resistor (chip)	0 63M J				01
J0008	**RD350000**	Carbon Resistor (chip)	0 63M J				01
J0010	**RD350000**	Carbon Resistor (chip)	0 63M J				01
J0012	**RD350000**	Carbon Resistor (chip)	0 63M J				01
-0014	**RD350000**	Carbon Resistor (chip)	0 63M J				01
J0018	**RD350000**	Carbon Resistor (chip)	0 63M J				01
J0019	**RD350000**	Carbon Resistor (chip)	0 63M J				01
J0022	**RD350000**	Carbon Resistor (chip)	0 63M J				01
L0001	**VR579900**	Chip Inductance	BK2125HS601-T				01
-0011	**VR579900**	Chip Inductance	BK2125HS601-T				01
L0012	**VR243700**	Chip Inductance	56U LEM2520 T 560J				01
L0014	**VR243700**	Chip Inductance	56U LEM2520 T 560J				01
L0015	**VR243700**	Chip Inductance	56U LEM2520 T 560J				01
R0001	**RD359100**	Carbon Resistor (chip)	1.0M 63M J				01
R0002	**RD359100**	Carbon Resistor (chip)	1.0M 63M J				01
R0003	**RD356220**	Carbon Resistor (chip)	2.2K 63M J				01
R0004	**RD356100**	Carbon Resistor (chip)	1.0K 63M J				01
R0005	**RD355100**	Carbon Resistor (chip)	100 63M J				01
R0006	**RD357100**	Carbon Resistor (chip)	10K 63M J				01
R0008	**RD357100**	Carbon Resistor (chip)	10K 63M J				01
R0009	**RD357560**	Carbon Resistor (chip)	56K 63M J				01
R0010	**RD357220**	Carbon Resistor (chip)	22K 63M J				01
R0011	**RD354680**	Carbon Resistor (chip)	68 63M J				01
-0029	**RD354680**	Carbon Resistor (chip)	68 63M J				01
R0030	**RD356100**	Carbon Resistor (chip)	1.0K 63M J				01
R0031	**RD355100**	Carbon Resistor (chip)	100 63M J				01
-0039	**RD355100**	Carbon Resistor (chip)	100 63M J				01
R0040	**RD359100**	Carbon Resistor (chip)	1.0M 63M J				01
R0041	**RD354680**	Carbon Resistor (chip)	68 63M J				01
R0042	**RD355100**	Carbon Resistor (chip)	100 63M J				01
-0048	**RD355100**	Carbon Resistor (chip)	100 63M J				01
R0049	**RD356560**	Carbon Resistor (chip)	5.6K 63M J				01
R0050	**RD356560**	Carbon Resistor (chip)	5.6K 63M J				01
R0051	**RD355100**	Carbon Resistor (chip)	100 63M J				01
-0062	**RD357100**	Carbon Resistor (chip)	10K 63M J				01
R0064	**RD356100**	Carbon Resistor (chip)	1.0K 63M J				01
R0065	**RD355330**	Carbon Resistor (chip)	330 63M J				01
R0066	**RD356100**	Carbon Resistor (chip)	1.0K 63M J				01
-0069	**RD356100**	Carbon Resistor (chip)	1.0K 63M J				01
R0070	**RD355330**	Carbon Resistor (chip)	330 63M J				01
-0075	**RD355330**	Carbon Resistor (chip)	330 63M J				01
R0076	**RD355100**	Carbon Resistor (chip)	100 63M J				01
R0077	**RD355100**	Carbon Resistor (chip)	100 63M J				01
R0078	**RD356100**	Carbon Resistor (chip)	1.0K 63M J				01
R0079	**RD356680**	Carbon Resistor (chip)	6.8K 63M J				01
R0080	**RD357100**	Carbon Resistor (chip)	10K 63M J				01
-0094	**RD357100**	Carbon Resistor (chip)	10K 63M J				01
R0095	**RD356330**	Carbon Resistor (chip)	3.3K 63M J				01
R0096	**RD355220**	Carbon Resistor (chip)	220 63M J				01
R0097	**RD357100**	Carbon Resistor (chip)	10K 63M J				01
R0098	**RD350000**	Carbon Resistor (chip)	0 63M J				01
R0099	**RD355680**	Carbon Resistor (chip)	680 63M J				01
R0100	**RD354680**	Carbon Resistor (chip)	68 63M J				01
-0139	**RD354680**	Carbon Resistor (chip)	68 63M J				01
R0140	**RD357100**	Carbon Resistor (chip)	10K 63M J				01
-0144	**RD357100**	Carbon Resistor (chip)	10K 63M J				01
R0145	**RD358470**	Carbon Resistor (chip)	470K 63M J				01
R0146	**RD356100**	Carbon Resistor (chip)	1.0K 63M J				01
R0147	**RD354680**	Carbon Resistor (chip)	68 63M J				01
-0182	**RD354680**	Carbon Resistor (chip)	68 63M J				01
R0183	**RD357100**	Carbon Resistor (chip)	10K 63M J				01
-0186	**RD357100**	Carbon Resistor (chip)	10K 63M J				01
R0187	**RD358470**	Carbon Resistor (chip)	470K 63M J				01
-0189	**RD358470**	Carbon Resistor (chip)	470K 63M J				01
R0190	**RD356100**	Carbon Resistor (chip)	1.0K 63M J				01
-0193	**RD356100**	Carbon Resistor (chip)	1.0K 63M J				01
R0194	**RD357100**	Carbon Resistor (chip)	10K 63M J				01

⋆: New Parts

RANK: Japan only

	REF NO.	PART NO.	DESCRIPTION			REMARKS	QTY	RANK
	-0199	**RD357100**	Carbon Resistor (chip)	10K 63M J				01
	R0200	**RD356150**	Carbon Resistor (chip)	1.5K 63M J				01
	R0201	**RD358470**	Carbon Resistor (chip)	470K 63M J				01
	R0202	**RD358470**	Carbon Resistor (chip)	470K 63M J				01
	R0203	**RD357100**	Carbon Resistor (chip)	10K 63M J				01
	R0204	**RD357100**	Carbon Resistor (chip)	10K 63M J				01
	R0205	**RD356100**	Carbon Resistor (chip)	1.0K 63M J				01
	R0206	**RD357220**	Carbon Resistor (chip)	22K 63M J				01
	R0207	**RD357220**	Carbon Resistor (chip)	22K 63M J				01
	R0208	**RD356820**	Carbon Resistor (chip)	8.2K 63M J				01
	R0209	**RD356270**	Carbon Resistor (chip)	2.7K 63M J				01
	R0210	**RD255470**	Carbon Resistor (chip)	470.0 0.1 J				01
	R0211	**RD355100**	Carbon Resistor (chip)	100 63M J				01
	R0213	**RD356220**	Carbon Resistor (chip)	2.2K 63M J				01
	-0218	**RD356220**	Carbon Resistor (chip)	2.2K 63M J				01
	R0219	**RD356100**	Carbon Resistor (chip)	1.0K 63M J				01
	R0220	**RD355820**	Carbon Resistor (chip)	820 63M J				
	R0221	**RD356120**	Carbon Resistor (chip)	1.2K 63M J				01
	R0222	**RD356220**	Carbon Resistor (chip)	2.2K 63M J				01
	R0223	**RD355220**	Carbon Resistor (chip)	220 63M J				01
	-0225	**RD355220**	Carbon Resistor (chip)	220 63M J				01
	R0226	**RD357470**	Carbon Resistor (chip)	47K 63M J				01
	R0227	**RD354750**	Carbon Resistor (chip)	75 63M J				
	R0228	**RD356470**	Carbon Resistor (chip)	4.7K 63M J				01
	R0229	**RD356470**	Carbon Resistor (chip)	4.7K 63M J				01
	R0230	**RD357100**	Carbon Resistor (chip)	10K 63M J				01
	-0233	**RD357100**	Carbon Resistor (chip)	10K 63M J				01
	R0234	**RD356100**	Carbon Resistor (chip)	1.0K 63M J				01
	R0235	**RD358100**	Carbon Resistor (chip)	100K 63M J				01
	R0236	**RD355150**	Carbon Resistor (chip)	150 63M J				01
	R0237	**RD355150**	Carbon Resistor (chip)	150 63M J				01
	R0238	**RD356470**	Carbon Resistor (chip)	4.7K 63M J				01
	R0239	**RD356100**	Carbon Resistor (chip)	1.0K 63M J				01
	R0240	**RD357100**	Carbon Resistor (chip)	10K 63M J				01
	R0241	**RD358100**	Carbon Resistor (chip)	100K 63M J				01
	R0242	**RD355100**	Carbon Resistor (chip)	100 63M J				01
	R0244	**RD355220**	Carbon Resistor (chip)	220 63M J				01
	R0245	**RD357100**	Carbon Resistor (chip)	10K 63M J				01
	R0246	**RD356100**	Carbon Resistor (chip)	1.0K 63M J				01
	R0247	**RD355330**	Carbon Resistor (chip)	330 63M J				01
	R0248	**RD356100**	Carbon Resistor (chip)	1.0K 63M J				01
	R0249	**RD357100**	Carbon Resistor (chip)	10K 63M J				01
	R0250	**RD355680**	Carbon Resistor (chip)	680 63M J				01
	R0252	**RD355100**	Carbon Resistor (chip)	100 63M J				01
	R0253	**RD356100**	Carbon Resistor (chip)	1.0K 63M J				01
	R0254	**RD357100**	Carbon Resistor (chip)	10K 63M J				01
	R0255	**RD357100**	Carbon Resistor (chip)	10K 63M J				01
	RY001	**V2902800**	Relay	DC NAS-5W-K-TN 5V				
	SW001	**V3026900**	Jumper Switch	CHS-01 TA1		Destination switch		02
	TR001	**VV556400**	Transistor	2SC2412K Q,R,S				01
	TR002	**VJ927200**	Transistor	2SA1162 O,Y				01
	TR003	**VV556400**	Transistor	2SC2412K Q,R,S				01
	TR004	**VV556400**	Transistor	2SC2412K Q,R,S				01
	TR005	**VJ927200**	Transistor	2SA1162 O,Y				01
	TR006	**VV556400**	Transistor	2SC2412K Q,R,S				01
	TR007	**VV556400**	Transistor	2SC2412K Q,R,S				01
	X0001	**VV762900**	Quartz Crystal Unit	7M SMD-49				03
	X0002	**VV335600**	Quartz Crystal Unit	33.8688M DSO751S				06
	X0003	**V2370300**	Ceramic Resonator	16.00M CSACV16.00				01
	X0004	**VV905100**	Ceramic Resonator	CSTCC4.00MG0H6-TC				01
	X0005	**V3082900**	Quartz Crystal Unit	14.318MHZ DSX151G				03
	X0006	**V3083000**	Quartz Crystal Unit	17.734MHZ DSX151G				03
	ZD001	**VU172000**	Zener Diode	UDZS5.6BTE-17 5.6V				01
*		**V4472300**	Circuit Board	EQ-JACK		(XV484C0)		
		VD041700	Jumper Wire	0.55				
		VT733600	GND Wire					04
*	C0100	**UB013390**	Monolithic Ceramic Cap.	B 3900P 50V K				
	C0101	**UB013560**	Monolithic Ceramic Cap.	B 5600P 50V K				01
	C0102	**UB052180**	Monolithic Ceramic Cap.	SL 180P 50V J				01

*: New Parts

RANK: Japan only

REF NO.	PART NO.	DESCRIPTION			REMARKS	QTY	RANK
C0103	**UB052150**	Monolithic Ceramic Cap.	SL 150P 50V J				01
C0104	**UN847100**	Electrolytic Cap.-BP	10.00 25.0V				01
C0105	**UR865220**	Electrolytic Cap.	0.22 50.0V				01
C0106	**UB045100**	Monolithic Ceramic Cap.	F 0.100 50V Z				01
C0107	**UB045100**	Monolithic Ceramic Cap.	F 0.100 50V Z				01
C0108	**UN866100**	Electrolytic Cap.-BP	1.00 50.0V				01
* C0110	**UB013390**	Monolithic Ceramic Cap.	B 3900P 50V K				
C0111	**UB013560**	Monolithic Ceramic Cap.	B 5600P 50V K				01
C0112	**UB052180**	Monolithic Ceramic Cap.	SL 180P 50V J				01
C0113	**UB052150**	Monolithic Ceramic Cap.	SL 150P 50V J				01
C0114	**UN847100**	Electrolytic Cap.-BP	10.00 25.0V				01
C0115	**UR865220**	Electrolytic Cap.	0.22 50.0V				01
C0118	**UN866100**	Electrolytic Cap.-BP	1.00 50.0V				01
C0120	**UN866100**	Electrolytic Cap.-BP	1.00 50.0V				01
C0121	**UB051390**	Monolithic Ceramic Cap.	SL 39P 50V J				01
C0122	**UB013100**	Monolithic Ceramic Cap.	B 1000P 50V K				01
C0123	**UB045100**	Monolithic Ceramic Cap.	F 0.100 50V Z				01
C0124	**UB045100**	Monolithic Ceramic Cap.	F 0.100 50V Z				01
C0130	**UN866100**	Electrolytic Cap.-BP	1.00 50.0V				01
C0131	**UB051390**	Monolithic Ceramic Cap.	SL 39P 50V J				01
C0132	**UB013100**	Monolithic Ceramic Cap.	B 1000P 50V K				01
C0140	**UB052150**	Monolithic Ceramic Cap.	SL 150P 50V J				01
C0141	**UB045100**	Monolithic Ceramic Cap.	F 0.100 50V Z				01
C0142	**UR866100**	Electrolytic Cap.	1.00 50.0V				01
C0143	**UB052100**	Monolithic Ceramic Cap.	SL 100P 50V J				01
C0144	**UN847470**	Electrolytic Cap.-BP	47.00 25.0V				01
C0145	**UB013100**	Monolithic Ceramic Cap.	B 1000P 50V K				01
C0150	**UB052150**	Monolithic Ceramic Cap.	SL 150P 50V J				01
C0151	**UB045100**	Monolithic Ceramic Cap.	F 0.100 50V Z				01
C0152	**UR866100**	Electrolytic Cap.	1.00 50.0V				01
C0153	**UB052100**	Monolithic Ceramic Cap.	SL 100P 50V J				01
C0154	**UN847470**	Electrolytic Cap.-BP	47.00 25.0V				01
C0155	**UB013100**	Monolithic Ceramic Cap.	B 1000P 50V K				01
C0160	**VE327000**	Monolithic Mylar Capacitor	0.68 50V J				01
C0161	**VE326800**	Monolithic Mylar Capacitor	0.047 50V J				01
C0162	**UA354680**	Mylar Capacitor	0.068 50V J				01
C0163	**VE326300**	Monolithic Mylar Capacitor	0.18 50V J				01
C0164	**UA353680**	Mylar Capacitor	6800P 50V J				01
C0165	**VE326100**	Monolithic Mylar Capacitor	0.12 50V J				01
C0166	**UA353220**	Mylar Capacitor	2200P 50V J				01
C0167	**UA354180**	Mylar Capacitor	0.018 50V J				01
C0168	**UA353680**	Mylar Capacitor	6800P 50V J				01
C0169	**UA352100**	Mylar Capacitor	100P 50V J				01
C0170	**UB012470**	Monolithic Ceramic Cap.	B 470P 50V K				01
C0171	**UB045100**	Monolithic Ceramic Cap.	F 0.100 50V Z				01
C0172	**UB045100**	Monolithic Ceramic Cap.	F 0.100 50V Z				01
C0173	**UN866100**	Electrolytic Cap.-BP	1.00 50.0V				01
C0180	**VE327000**	Monolithic Mylar Capacitor	0.68 50V J				01
C0181	**VE326800**	Monolithic Mylar Capacitor	0.47 50V J				01
C0182	**UA354680**	Mylar Capacitor	0.068 50V J				01
C0183	**VE326300**	Monolithic Mylar Capacitor	0.18 50V J				01
C0184	**UA353680**	Mylar Capacitor	6800P 50V J				01
C0185	**VE326100**	Monolithic Mylar Capacitor	0.12 50V J				01
C0186	**UA353220**	Mylar Capacitor	2200P 50V J				01
C0187	**UA354180**	Mylar Capacitor	0.018 50V J				01
C0188	**UA353680**	Mylar Capacitor	6800P 50V J				01
C0189	**UA352100**	Mylar Capacitor	100P 50V J				01
C0190	**UB012470**	Monolithic Ceramic Cap.	B 470P 50V K				01
C0191	**UB045100**	Monolithic Ceramic Cap.	F 0.100 50V Z				01
C0192	**UB045100**	Monolithic Ceramic Cap.	F 0.100 50V Z				01
C0193	**UN866100**	Electrolytic Cap.-BP	1.00 50.0V				01
C0220	**UB044100**	Monolithic Ceramic Cap.	F 0.010 50V Z				01
C0221	**UB044100**	Monolithic Ceramic Cap.	F 0.010 50V Z				01
C0240	**UI538100**	Electrolytic Cap.	100.00 16.0V				01
C0241	**UI538100**	Electrolytic Cap.	100.00 16.0V				01
C0540	**UB044100**	Monolithic Ceramic Cap.	F 0.010 50V Z				01
-0542	**UB044100**	Monolithic Ceramic Cap.	F 0.010 50V Z				01
C0550	**UB013100**	Monolithic Ceramic Cap.	B 1000P 50V K				01
C0551	**UB044100**	Monolithic Ceramic Cap.	F 0.010 50V Z				01
CN200	**VB858700**	Connector Base Post	PH- 8P SE				01

*: New Parts

RANK: Japan only

REF NO.	PART NO.	DESCRIPTION			REMARKS	QTY	RANK
CN210	**VK015600**	Connector Base Post	PH-16P SE				01
CN220	**VB858600**	Connector Base Post	PH- 7P SE				01
CN240	**VB858800**	Connector Base Post	PH- 9P SE				01
D0140	**VB493900**	Diode	MA221				01
IC100	**XE518A00**	IC	UPC4574G2		OP AMP		03
IC140	**XT131A00**	IC	LA6517M-TE-R		OP AMP		04
IC160	**XT773A00**	IC	M5227FP		EQUALIZER		03
IC180	**XT773A00**	IC	M5227FP		EQUALIZER		03
JK500	**VS115400**	Phone Jack	LGR4609-7000 BL		AUX IN L/L+R		01
JK510	**VS115400**	Phone Jack	LGR4609-7000 BL		AUX IN R		01
JK520	**VS115400**	Phone Jack	LGR4609-7000 BL		AUX OUT L/L+R		01
JK530	**VS115400**	Phone Jack	LGR4609-7000 BL		AUX OUT R		01
JK540	**VS056300**	Phone Jack	HLJ7001-01-		EXP.PEDAL		01
JK550	**VI311100**	Pin Jack	1P YKC21-3017		VIDEO OUT		01
JP	**RD250000**	Carbon Resistor (chip)	0.0 0.0 J				01
L0501	**V3085000**	Choke Coil	R-5C.10U 10uH				
L0511	**V3085000**	Choke Coil	R-5C.10U 10uH				
L0520	**V3085000**	Choke Coil	R-5C.10U 10uH				
L0521	**GE300670**	Ferrite Bead	BL02RN2-R62T4				02
L0530	**V3085000**	Choke Coil	R-5C.10U 10uH				
L0531	**GE300670**	Ferrite Bead	BL02RN2-R62T4				02
L0540	**VR243700**	Chip Inductance	56U LEM2520 T 560J				01
-0542	**VR243700**	Chip Inductance	56U LEM2520 T 560J				01
L0550	**V3085000**	Choke Coil	R-5C.10U 10uH				
L0551	**VD041700**	Jumper Wire	0.55				
R0100	**RD256220**	Carbon Resistor (chip)	2.2K 0.1 J				01
R0101	**RD256470**	Carbon Resistor (chip)	4.7K 0.1 J				01
R0102	**RD257120**	Carbon Resistor (chip)	12.0K 0.1 J				01
R0103	**RD257100**	Carbon Resistor (chip)	10.0K 0.1 J				01
R0104	**RD257100**	Carbon Resistor (chip)	10.0K 0.1 J				01
R0105	**RD257560**	Carbon Resistor (chip)	56.0K 0.1 J				01
R0106	**RD257100**	Carbon Resistor (chip)	10.0K 0.1 J				01
R0107	**RD255120**	Carbon Resistor (chip)	120.0 0.1 J				01
R0110	**RD256220**	Carbon Resistor (chip)	2.2K 0.1 J				01
R0111	**RD256470**	Carbon Resistor (chip)	4.7K 0.1 J				01
R0112	**RD257120**	Carbon Resistor (chip)	12.0K 0.1 J				01
R0113	**RD257100**	Carbon Resistor (chip)	10.0K 0.1 J				01
R0114	**RD257100**	Carbon Resistor (chip)	10.0K 0.1 J				01
R0115	**RD257560**	Carbon Resistor (chip)	56.0K 0.1 J				01
R0116	**RD257100**	Carbon Resistor (chip)	10.0K 0.1 J				01
R0117	**RD255120**	Carbon Resistor (chip)	120.0 0.1 J				01
R0120	**RD257100**	Carbon Resistor (chip)	10.0K 0.1 J				01
R0121	**RD257390**	Carbon Resistor (chip)	39.0K 0.1 J				01
R0130	**RD257100**	Carbon Resistor (chip)	10.0K 0.1 J				01
R0131	**RD257390**	Carbon Resistor (chip)	39.0K 0.1 J				01
R0140	**RD257150**	Carbon Resistor (chip)	15.0K 0.1 J				01
R0141	**RD257100**	Carbon Resistor (chip)	10.0K 0.1 J				01
R0142	**RD254330**	Carbon Resistor (chip)	33.0 0.1 J				01
R0143	**RD250000**	Carbon Resistor (chip)	0.0 0.0 J				01
R0144	**RD256100**	Carbon Resistor (chip)	1.0K 0.1 J				01
R0145	**RD257100**	Carbon Resistor (chip)	10.0K 0.1 J				01
R0150	**RD257150**	Carbon Resistor (chip)	15.0K 0.1 J				01
R0151	**RD257100**	Carbon Resistor (chip)	10.0K 0.1 J				01
R0152	**RD254330**	Carbon Resistor (chip)	33.0 0.1 J				01
R0153	**RD250000**	Carbon Resistor (chip)	0.0 0.0 J				01
R0154	**RD256100**	Carbon Resistor (chip)	1.0K 0.1 J				01
R0155	**RD257100**	Carbon Resistor (chip)	10.0K 0.1 J				01
R0160	**RD257180**	Carbon Resistor (chip)	18.0K 0.1 J				01
R0161	**RD256180**	Carbon Resistor (chip)	1.8K 0.1 J				01
R0162	**RD256120**	Carbon Resistor (chip)	1.2K 0.1 J				01
R0163	**RD257180**	Carbon Resistor (chip)	18.0K 0.1 J				01
R0164	**RD256560**	Carbon Resistor (chip)	5.6K 0.1 J				01
R0165	**RD257120**	Carbon Resistor (chip)	12.0K 0.1 J				01
R0166	**RD256100**	Carbon Resistor (chip)	1.0K 0.1 J				01
R0167	**RD257180**	Carbon Resistor (chip)	18.0K 0.1 J				01
R0168	**RD257180**	Carbon Resistor (chip)	18.0K 0.1 J				01
R0169	**RD256150**	Carbon Resistor (chip)	1.5K 0.1 J				01
R0170	**RD256470**	Carbon Resistor (chip)	4.7K 0.1 J				01
R0171	**RD256330**	Carbon Resistor (chip)	3.3K 0.1 J				01
R0180	**RD257180**	Carbon Resistor (chip)	18.0K 0.1 J				01

⋆: New Parts

RANK: Japan only

REF NO.	PART NO.	DESCRIPTION			REMARKS	QTY	RANK
R0181	**RD256180**	Carbon Resistor (chip)	1.8K 0.1 J				01
R0182	**RD256120**	Carbon Resistor (chip)	1.2K 0.1 J				01
R0183	**RD257180**	Carbon Resistor (chip)	18.0K 0.1 J				01
R0184	**RD256560**	Carbon Resistor (chip)	5.6K 0.1 J				01
R0185	**RD257120**	Carbon Resistor (chip)	12.0K 0.1 J				01
R0186	**RD256100**	Carbon Resistor (chip)	1.0K 0.1 J				01
R0187	**RD257180**	Carbon Resistor (chip)	18.0K 0.1 J				01
R0188	**RD257180**	Carbon Resistor (chip)	18.0K 0.1 J				01
R0189	**RD256150**	Carbon Resistor (chip)	1.5K 0.1 J				01
R0190	**RD256470**	Carbon Resistor (chip)	4.7K 0.1 J				01
R0191	**RD256330**	Carbon Resistor (chip)	3.3K 0.1 J				01
R0220	**RD257330**	Carbon Resistor (chip)	33.0K 0.1 J				01
R0221	**RD256330**	Carbon Resistor (chip)	3.3K 0.1 J				01
R0224	**RD256470**	Carbon Resistor (chip)	4.7K 0.1 J				01
R0225	**RD250000**	Carbon Resistor (chip)	0.0 0.0 J				01
R0240	**RD256390**	Carbon Resistor (chip)	3.9K 0.1 J				01
R0241	**RD256390**	Carbon Resistor (chip)	3.9K 0.1 J				01
R0242	**RD256150**	Carbon Resistor (chip)	1.5K 0.1 J				01
R0243	**RD256150**	Carbon Resistor (chip)	1.5K 0.1 J				01
R0520	**RD255560**	Carbon Resistor (chip)	560.0 0.1 J				01
R0521	**RD256470**	Carbon Resistor (chip)	4.7K 0.1 J				01
R0530	**RD255560**	Carbon Resistor (chip)	560.0 0.1 J				01
R0531	**RD256470**	Carbon Resistor (chip)	4.7K 0.1 J				01
R0540	**RD255470**	Carbon Resistor (chip)	470.0 0.1 J				01
R0541	**RD255470**	Carbon Resistor (chip)	470.0 0.1 J				01
R0542	**RD256100**	Carbon Resistor (chip)	1.0K 0.1 J				01
R0543	**RD250000**	Carbon Resistor (chip)	0.0 0.0 J				01
R0550	**RD256100**	Carbon Resistor (chip)	1.0K 0.1 J				01
RY140	**KC001900**	Relay	DC RY12W 12V				07
RY520	**KC001900**	Relay	DC RY12W 12V				07
SW300	**VY697700**	Slide Switch	SSSF112-S09N0		VIDEO SELECT		01
TR220	**VV556400**	Transistor	2SC2412K Q,R,S				01
	- -	Circuit Board	FU120L		U (VV65020)(XS822A0)		
	- -	Circuit Board	FU120L		E (VV65040)(XS822A0)		
	VT308200	AC Inlet	2P CCT9302-0201		U		02
	VT308100	AC Inlet	2P CCT9302-0101M		E		02
	LB201530	Fuse Holder	PC-PH1			2	01
	VD041700	Jumper Wire	0.55				
C0001	**VY675000**	Capacitor-KH	0.010 250V J.U.C.S				01
C0002	**VY675100**	Capacitor-KH	4700P 250V J.U.C.S				01
C0003	**VY675100**	Capacitor-KH	4700P 250V J.U.C.S				01
CN001	**LB932030**	Base Post Connector	VH- 3P TE				01
CN002	**LB932060**	Base Post Connector	VH- 6P TE				01
⚠ F0001	**KB003630**	Fuse	5.00A JU		U		01
⚠ F0001	**KB003080**	Fuse	2.50A S		E		01
J0001	**VD041700**	Jumper Wire	0.55				
L0001	**VD041700**	Jumper Wire	0.55		U		
L0001	**VV652500**	Coil	S-100-J0 5.7mH		E		07
L0003	**VF790900**	Coil	SU10V-D20010 10uH				03
	VT478400	Circuit Board	HP		(XQ795A0)		10
	VE659000	Semiconductive Cera. Cap.	0.1000 25V Z				01
	VB971100	Coil	FL5R200QN 20uH				01
	VK992200	Carbon Resistor	68.0 1/2 J				01
	LB101870	Phone Jack	YKB21-5006		PHONES		03
	LB919020	Base Post Connector	XH 2P SE				01
	VB858100	Connector Base Post	PH- 2P SE				01
	VB858600	Connector Base Post	PH- 7P SE				01
	VD041700	Jumper Wire	0.55				
	VY638900	Circuit Board	INV		(XT122A0)		13
C0001	**VP318400**	Electrolytic Cap. (chip)	0.068 250 ECQE26				01
C0002	**VS147400**	Ceramic Capacitor-SL	18P 3KV J				01
CN001	**LB919020**	Base Post Connector	XH 2P SE				01
CN002	**VT389600**	Base Post Connector	53259 4P SE				01
L0001	**VS587900**	Coil	LH L 08TB221K 220u				01
L0002	**VS602500**	Inverter Transformer	CLF16A				07
R0001	**HF756560**	Carbon Resistor	5.6K 1/4 J				01
R0002	**HF756560**	Carbon Resistor	5.6K 1/4 J				01

⋆: New Parts

RANK: Japan only

REF NO.	PART NO.	DESCRIPTION			REMARKS	QTY	RANK
TR001	**VS185700**	Transistor	2SC3669-O/Y(TPF2)		}		01
TR001	**VS185600**	Transistor	2SD1863 TV2 82-390		}		01
TR002	**VS185700**	Transistor	2SC3669-O/Y(TPF2)		}		01
TR002	**VS185600**	Transistor	2SD1863 TV2 82-390		}		01
	VU415700	Circuit Board	JACK1		(XR598E0)		13
	VD041700	Jumper Wire	0.55				
	VT733600	GND Wire					04
C001	**FG644100**	Ceramic Capacitor-F	0.0100 50V Z				01
C004	**FG644100**	Ceramic Capacitor-F	0.0100 50V Z				01
C005	**FG644100**	Ceramic Capacitor-F	0.0100 50V Z				01
C006	**UN817470**	Electrolytic Cap.-BP	47.00 6.3V				01
C007	**FG644100**	Ceramic Capacitor-F	0.0100 50V Z				01
C008	**UJ837100**	Electrolytic Cap.	10.00 16.0V				01
C074	**FG644100**	Ceramic Capacitor-F	0.0100 50V Z				01
CN004	**VB390300**	Connector Base Post	PH- 7P TE				01
D002	**VD631600**	Diode	1SS133,176,HSS104				01
-005	**VD631600**	Diode	1SS133,176,HSS104				01
FL01	**VB835000**	Coil	FL5R200QNT 20uH				01
-07	**VB835000**	Coil	FL5R200QNT 20uH				01
IC03	**VD473200**	Photo Coupler	6N137				05
IC05	**IG142250**	IC	SN74HCU04N		INVERTER		01
IC07	**XU463A00**	IC	SN75C1168N		LINE TRANSCEIVER		05
JK01	**VT202500**	DIN Connector	5P YKF51-50		MIDI IN/OUT/THRU		01
-03	**VT202500**	DIN Connector	5P YKF51-50				01
JK04	**VM761000**	DIN Connector	DIN 8P MD-S810		TO HOST		03
R068	**HF457100**	Carbon Resistor	10.0K 1/4 J				01
R069	**HF457100**	Carbon Resistor	10.0K 1/4 J				01
R070	**HF456100**	Carbon Resistor	1.0K 1/4 J				01
R071	**HF457100**	Carbon Resistor	10.0K 1/4 J				01
-075	**HF457100**	Carbon Resistor	10.0K 1/4 J				01
R076	**HF455100**	Carbon Resistor	100.0 1/4 J				01
R077	**HF455100**	Carbon Resistor	100.0 1/4 J				01
R078	**HF457100**	Carbon Resistor	10.0K 1/4 J				01
R079	**HF457100**	Carbon Resistor	10.0K 1/4 J				01
R080	**HF455220**	Carbon Resistor	220.0 1/4 J				01
R081	**HF455220**	Carbon Resistor	220.0 1/4 J				01
R082	**HF456100**	Carbon Resistor	1.0K 1/4 J				01
R083	**HF457100**	Carbon Resistor	10.0K 1/4 J				01
R084	**HF455220**	Carbon Resistor	220.0 1/4 J				01
-088	**HF455220**	Carbon Resistor	220.0 1/4 J				01
R089	**HF456150**	Carbon Resistor	1.5K 1/4 J				01
R090	**HF456150**	Carbon Resistor	1.5K 1/4 J				01
R091	**HF457220**	Carbon Resistor	22.0K 1/4 J				01
-093	**HF457220**	Carbon Resistor	22.0K 1/4 J				01
R094	**VD041700**	Jumper Wire	0.55				
R095	**HF457100**	Carbon Resistor	10.0K 1/4 J				01
SW01	**VQ665200**	Slide Switch	SSSF144-S06N-0		HOST SELECT		03
TR02	**IC174070**	Transistor	2SC1740S R,S				01
-05	**IC174070**	Transistor	2SC1740S R,S				01
WB01	**GE300670**	Ferrite Bead	BL02RN2-R62T4				02
-05	**GE300670**	Ferrite Bead	BL02RN2-R62T4				02
WB07	**GE300670**	Ferrite Bead	BL02RN2-R62T4				02
	- -	Circuit Board	MA120		U (VT14320)(XQ393E0)		
	- -	Circuit Board	MA120		E (VT14330)(XQ393E0)		
	VT443500	Support, PCB	T=8				03
	VT740000	Support, PCB	3T-9 T=9			3	03
	VP206500	Fuse Holder	EYF-52BC			6	01
	VJ834500	Insulation Sheet	#1000				03
	VD041700	Jumper Wire	0.55				
C0001	**VA302600**	Ceramic Capacitor-E	0.0100 500V P				01
C0002	**VA302600**	Ceramic Capacitor-E	0.0100 500V P				01
C0003	**VU642700**	Electrolytic Cap.	4700 16.0V				03
C0004	**VU642700**	Electrolytic Cap.	4700 16.0V				03
C0005	**VL232200**	Electrolytic Cap.	3300 50.0V				04
-0008	**VL232200**	Electrolytic Cap.	3300 50.0V				04
C0009	**UR866100**	Electrolytic Cap.	1.00 50.0V				01
-0011	**UR866100**	Electrolytic Cap.	1.00 50.0V				01
C0012	**FG613100**	Ceramic Capacitor-B	1000P 50V K				01

⋆: New Parts

RANK: Japan only

	REF NO.	PART NO.	DESCRIPTION			REMARKS	QTY	RANK
	C0013	**UR838100**	Electrolytic Cap.	100.00 16.0V				01
	C0014	**VY861100**	Electrolytic Cap.	2200 25.0V				03
	C0015	**VY861100**	Electrolytic Cap.	2200 25.0V				03
	C0016	**UR866100**	Electrolytic Cap.	1.00 50.0V				01
	C0017	**VC694800**	Semiconductive Cera. Cap.	0.1000 25V Z				01
	C0018	**UR866100**	Electrolytic Cap.	1.00 50.0V				01
	C0019	**UR866100**	Electrolytic Cap.	1.00 50.0V				01
	C0020	**VY715600**	Electrolytic Cap.	100.00 50.0V				
	C0021	**VY715600**	Electrolytic Cap.	100.00 50.0V				
	C0022	**FG613100**	Ceramic Capacitor-B	1000P 50V K				01
	C0023	**UR866100**	Electrolytic Cap.	1.00 50.0V				01
	C0024	**UR838100**	Electrolytic Cap.	100.00 16.0V				01
	C0025	**VC694800**	Semiconductive Cera. Cap.	0.1000 25V Z				01
	C0026	**VC694800**	Semiconductive Cera. Cap.	0.1000 25V Z				01
	C0027	**FG613100**	Ceramic Capacitor-B	1000P 50V K				01
	C0028	**UR866100**	Electrolytic Cap.	1.00 50.0V				01
	C0029	**UR838100**	Electrolytic Cap.	100.00 16.0V				01
	C0030	**VC694800**	Semiconductive Cera. Cap.	0.1000 25V Z				01
	C0031	**VC694800**	Semiconductive Cera. Cap.	0.1000 25V Z				01
	C0032	**UR838100**	Electrolytic Cap.	100.00 16.0V				01
	C0033	**UR866330**	Electrolytic Cap.	3.30 50.0V				01
	CN001	**LB932080**	Base Post Connector	VH- 8P TE				01
	CN003	**LB918030**	Base Post Connector	XH 3P TE				01
	CN004	**VB390300**	Connector Base Post	PH- 7P TE				01
	CN005	**LB932040**	Base Post Connector	VH- 4P TE				01
	CN006	**VB390500**	Connector Base Post	PH- 9P TE				03
	DB001	**VK421800**	Diode Stack	D5SBA20 6.0A 200V				03
	DB002	**VQ111500**	Diode Stack	D3SBA20-4103 4.0A				03
	DB003	**VR253700**	Diode Stack	S1NB20 1.0A 200V				02
	D0001	**VB481900**	Diode	11ES4				01
	-0005	**VB481900**	Diode	11ES4				01
⚠	F0001	**KB003630**	Fuse	5.00A JU		U		01
⚠	F0001	**KB003240**	Fuse	5.00A S		E		01
⚠	F0002	**KB003630**	Fuse	5.00A JU		U		01
⚠	F0002	**KB003240**	Fuse	5.00A S		E		01
⚠	F0003	**KB003630**	Fuse	5.00A JU		U		01
⚠	F0003	**KB003240**	Fuse	5.00A S		E		01
	IC001	**XQ437A00**	IC	SI-3051N		REGULATOR +5V		03
	IC002	**XQ667A00**	IC	M5237L		REGULATOR +5V		02
	IC003	**XJ602A00**	IC	NJM78M12FA		REGULATOR +12V 0.5A		02
	IC004	**XD343A00**	IC	NJM79M12FA		REGULATOR -12V		03
	IC005	**XQ374A00**	IC	STK401-090		POWER AMP.		09
	R0001	**VU253100**	Fuse Resistor	0.47 1/2 J				01
	R0002	**VU253100**	Fuse Resistor	0.47 1/2 J				01
	R0003	**HF756100**	Carbon Resistor	1.0K 1/4 J				01
	R0004	**HF755220**	Carbon Resistor	220.0 1/4 J				01
	R0005	**HF754560**	Carbon Resistor	56.0 1/4 J				01
	R0006	**HF757100**	Carbon Resistor	10.0K 1/4 J				01
	R0007	**HF756330**	Carbon Resistor	3.3K 1/4 J				01
	R0008	**HW095100**	Fuse Resistor	100.0 1/4 J				01
	R0009	**HW095100**	Fuse Resistor	100.0 1/4 J				01
	R0010	**HF755560**	Carbon Resistor	560.0 1/4 J				01
	R0011	**HF757100**	Carbon Resistor	10.0K 1/4 J				01
	R0012	**HF755390**	Carbon Resistor	390.0 1/4 J				01
	R0013	**HF757100**	Carbon Resistor	10.0K 1/4 J				01
	R0014	**VC742500**	Metal Oxide Film Resistor	10.0 1W J				01
	R0015	**HF757100**	Carbon Resistor	10.0K 1/4 J				01
	R0016	**HF755560**	Carbon Resistor	560.0 1/4 J				01
	R0017	**HF757100**	Carbon Resistor	10.0K 1/4 J				01
	R0018	**HF755390**	Carbon Resistor	390.0 1/4 J				01
	R0019	**HF757100**	Carbon Resistor	10.0K 1/4 J				01
	R0020	**VC742500**	Metal Oxide Film Resistor	10.0 1W J				01
	R0021	**HF757100**	Carbon Resistor	10.0K 1/4 J				01
	R0022	**HF756330**	Carbon Resistor	3.3K 1/4 J				01
	R0023	**HF756330**	Carbon Resistor	3.3K 1/4 J				01
	RY001	**VK881200**	Relay	DC G5Z-2A-YA 12V				04
	TR001	**VJ828100**	Transistor	2SA1451 O.Y				04
	TR002	**IC1815M0**	Transistor	2SC1815 Y,GR				01
	-004	**IC1815M0**	Transistor	2SC1815 Y,GR				01

⁎: New Parts

RANK: Japan only

REF NO.	PART NO.	DESCRIPTION			REMARKS	QTY	RANK
	V3135900	Circuit Board	MIC		(XV507C0)		10
	VD041700	Jumper Wire	0.55				
C0100	**UB013270**	Monolithic Ceramic Cap.	B 2700P 50V K				01
C0101	**UB445470**	Monolithic Ceramic Cap.	F 0.470 16V Z				01
C0102	**UB052100**	Monolithic Ceramic Cap.	SL 100P 50V J				01
C0150	**UB052220**	Monolithic Ceramic Cap.	SL 220P 50V J				01
C0151	**UB446100**	Ceramic Capacitor-F (chip)	F 1.0 16V Z				01
C0152	**UB052100**	Monolithic Ceramic Cap.	SL 100P 50V J				01
C0200	**UB446100**	Ceramic Capacitor-F (chip)	F 1.0 16V Z				01
C0201	**UB045100**	Monolithic Ceramic Cap.	F 0.100 50V Z				01
C0300	**UB045100**	Monolithic Ceramic Cap.	F 0.100 50V Z				01
C0301	**UR848100**	Electrolytic Cap.	100.00 25.0V				01
C0302	**UR848100**	Electrolytic Cap.	100.00 25.0V				01
C0303	**UB045100**	Monolithic Ceramic Cap.	F 0.100 50V Z				01
C0304	**UB045100**	Monolithic Ceramic Cap.	F 0.100 50V Z				01
CN300	**VB858400**	Connector Base Post	PH- 5P SE				01
CN301	**VB858100**	Connector Base Post	PH- 2P SE				01
IC100	**XF291A00**	IC	UPC4570G2		OP AMP		03
JK200	**LB101870**	Phone Jack	YKB21-5006		MIC.		03
L0200	**V2993400**	Coil	R-5C.20U 20uH				01
L0201	**V2993400**	Coil	R-5C.20U 20uH				01
R0100	**RD256100**	Carbon Resistor (chip)	1.0K 0.1 J				01
R0101	**RD257100**	Carbon Resistor (chip)	10.0K 0.1 J				01
R0150	**RD257270**	Carbon Resistor (chip)	27.0K 0.1 J				01
R0151	**RD256100**	Carbon Resistor (chip)	1.0K 0.1 J				01
R0400	**RD250000**	Carbon Resistor (chip)	0.0 0.0 J				01
SW400	**VZ050000**	Slide Switch	SSSF122-S09N0		MIC/LINE		01
VR500	**V3340000**	Rotary Volume	A 10.0K RK0971230		MIC.VOL		04
WB300	**V2635200**	Ferrite Bead	RH03506BT-B				
-304	**V2635200**	Ferrite Bead	RH03506BT-B				
	V3135500	Circuit Board	MV		(XV483A0)		10
	V3135400	Circuit Board	PNGL		(XV483A0)		10
	V3135300	Circuit Board	PNGR		(XV483A0)		10
	V3134900	Circuit Board	PNR		(XV483A0)		12
	VD041700	Jumper Wire	0.55				
	VT195900	Connector Assembly	DS-DS 3P-50				04
	- -	GND Wire	L=350mm		(VT45140)		
CN001	**VK015600**	Connector Base Post	PH-16P SE				01
CN002	**VB858900**	Connector Base Post	PH-10P SE				01
CN003	**VC166500**	Connector Base Post	PH-12P SE				01
CN101	**VC166500**	Connector Base Post	PH-12P SE				01
CN201	**VC166500**	Connector Base Post	PH-12P SE				01
CN301	**VB858700**	Connector Base Post	PH- 8P SE				01
CN302	**VB858200**	Connector Base Post	PH- 3P SE				01
D0001	**VB941200**	Diode	1SS133,1SS176				01
-0044	**VB941200**	Diode	1SS133,1SS176				01
ENC	**VU481300**	Rotary Encoder	REB161 PVB 15F		Data dial		03
KLD01	**VY746700**	LED	SEL4225R TP3 RE		A-1		01
KLD02	**VY746800**	LED	SEL4725Y TP3 YE		A#-1		01
KLD03	**VY746700**	LED	SEL4225R TP3 RE		B-1		01
KLD04	**VY746700**	LED	SEL4225R TP3 RE		C0		01
KLD05	**VY746800**	LED	SEL4725Y TP3 YE		C#0		01
KLD06	**VY746700**	LED	SEL4225R TP3 RE		D0		01
KLD07	**VY746800**	LED	SEL4725Y TP3 YE		D#0		01
KLD08	**VY746700**	LED	SEL4225R TP3 RE		E0		01
KLD09	**VY746700**	LED	SEL4225R TP3 RE		F0		01
KLD10	**VY746800**	LED	SEL4725Y TP3 YE		F#0		01
KLD11	**VY746700**	LED	SEL4225R TP3 RE		G0		01
KLD12	**VY746800**	LED	SEL4725Y TP3 YE		G#0		01
KLD13	**VY746700**	LED	SEL4225R TP3 RE		A0		01
KLD14	**VY746800**	LED	SEL4725Y TP3 YE		A#0		01
KLD15	**VY746700**	LED	SEL4225R TP3 RE		B0		01
KLD16	**VY746700**	LED	SEL4225R TP3 RE		C1		01
KLD17	**VY746800**	LED	SEL4725Y TP3 YE		C#1		01
KLD54	**VY746700**	LED	SEL4225R TP3 RE		D4		01
KLD55	**VY746800**	LED	SEL4725Y TP3 YE		D#4		01
KLD56	**VY746700**	LED	SEL4225R TP3 RE		E4		01
KLD57	**VY746700**	LED	SEL4225R TP3 RE		F4		01
KLD58	**VY746800**	LED	SEL4725Y TP3 YE		F#4		01

⋆: New Parts

RANK: Japan only

REF NO.	PART NO.	DESCRIPTION			REMARKS	QTY	RANK
KLD59	**VY746700**	LED	SEL4225R TP3 RE		G4		01
KLD60	**VY746800**	LED	SEL4725Y TP3 YE		G#4		01
KLD61	**VY746700**	LED	SEL4225R TP3 RE		A4		01
KLD62	**VY746800**	LED	SEL4725Y TP3 YE		A#4		01
KLD63	**VY746700**	LED	SEL4225R TP3 RE		B4		01
KLD64	**VY746700**	LED	SEL4225R TP3 RE		C5		01
KLD65	**VY746800**	LED	SEL4725Y TP3 YE		C#5		01
KLD66	**VY746700**	LED	SEL4225R TP3 RE		D5		01
KLD67	**VY746800**	LED	SEL4725Y TP3 YE		D#5		01
KLD68	**VY746700**	LED	SEL4225R TP3 RE		E5		01
KLD69	**VY746700**	LED	SEL4225R TP3 RE		F5		01
KLD70	**VY746800**	LED	SEL4725Y TP3 YE		F#5		01
KLD71	**VY746700**	LED	SEL4225R TP3 RE		G5		01
KLD72	**VY746800**	LED	SEL4725Y TP3 YE		G#5		01
KLD73	**VY746700**	LED	SEL4225R TP3 RE		A5		01
KLD74	**VY746800**	LED	SEL4725Y TP3 YE		A#5		01
KLD75	**VY746700**	LED	SEL4225R TP3 RE		B5		01
KLD76	**VY746700**	LED	SEL4225R TP3 RE		C6		01
KLD77	**VY746800**	LED	SEL4725Y TP3 YE		C#6		01
KLD78	**VY746700**	LED	SEL4225R TP3 RE		D6		01
KLD79	**VY746800**	LED	SEL4725Y TP3 YE		D#6		01
KLD80	**VY746700**	LED	SEL4225R TP3 RE		E6		01
KLD81	**VY746700**	LED	SEL4225R TP3 RE		F6		01
KLD82	**VY746800**	LED	SEL4725Y TP3 YE		F#6		01
KLD83	**VY746700**	LED	SEL4225R TP3 RE		G6		01
KLD84	**VY746800**	LED	SEL4725Y TP3 YE		G#6		01
KLD85	**VY746700**	LED	SEL4225R TP3 RE		A6		01
KLD86	**VY746800**	LED	SEL4725Y TP3 YE		A#6		01
KLD87	**VY746700**	LED	SEL4225R TP3 RE		B6		01
KLD88	**VY746700**	LED	SEL4225R TP3 RE		C7		01
LED01	**VD180000**	LED	SLZ-190B-03 RE		SONG,MIXER,MASTER EQ.,		01
-30	**VD180000**	LED	SLZ-190B-03 RE		FUNCTION,GUIDE CONTROL (EASY,...,SOUND REPEAT), SONG CONTROL(PAUSE,..., REC),VOICE(PIANO,.., EFFECT),DISK IN USE,ONE TOUCH SETTING,REGIST.		01
SW001	**VQ371700**	Tact Switch	SKHVBL042A H=7		LCD select,SONG,MIXER,		01
-044	**VQ371700**	Tact Switch	SKHVBL042A H=7		MASTER EQUALIZER, FUNCTION,GUIDE CONTROL (EASY PLAY,..,SOUND REPEAT),SONG CONTROL (PAUSE,..,REC),VOICE (PIANO,..,EFFECT),REGIST. (1-4),BANK(+/-),ONE TOUCH SETTING,REGISTRATION		01
VR001	**V4007500**	Slide Variable Resistor	B10.0KX2 RS30112C9		MASTER VOLUME		03
VR002	**VK368700**	Slide Variable Resistor	B 10.0K RS30111A9		ACMP/SONG VOLUME		03
	V2455000	Circuit Board	NETWORK		(XV011A0)		11
	VD041700	Jumper Wire	0.55				
C0001	**VS677800**	Electrolytic Cap.-BP	4.70UF 63.0V				01
C0002	**VS677800**	Electrolytic Cap.-BP	4.70UF 63.0V				01
CN001	**LB932040**	Base Post Connector	VH- 4P TE				01
CN002	**LB932080**	Base Post Connector	VH- 8P TE				01
L0001	**GD301770**	Network Coil	0.35mH 0.9mm				05
L0002	**GD301770**	Network Coil	0.35mH 0.9mm				05
*	**V4757300**	Circuit Board	NW1		(XT123B0)		
C0001	**VU643600**	Electrolytic Cap.-BP	1.00UF 63.0V				01
-0003	**VU643600**	Electrolytic Cap.-BP	1.00UF 63.0V				01
C0004	**VU643600**	Electrolytic Cap.-BP	1.00UF 63.0V				01
CN001	**LB932040**	Base Post Connector	VH- 4P TE				01
CN002	**LB932080**	Base Post Connector	VH- 8P TE				01
CN003	**LB918050**	Base Post Connector	XH 5P TE				01
	VZ151300	Circuit Board	PEDAL		(XR780B0)		07
	VZ151400	Circuit Board	PEDAL VR		(XR780B0)		07
	VB390200	Connector Base Post	PH- 6P TE				01
	HS412520	Rotary Variable Resistor	K161SOZO1		DAMPER pedal		05

*: New Parts

RANK: Japan only

REF NO.	PART NO.	DESCRIPTION			REMARKS	QTY	RANK
	VD041700	Jumper Wire	0.55				
	- -	GND Wire	L=30		(VZ01760)		
	VN637600	Circuit Board	PL		(XL151B0)		05
	VB858100	Connector Base Post	PH- 2P SE				01
	VD180000	LED	SLZ-190B-03 RE		POWER indicator		01
	VV880100	Circuit Board	PNGC		(XS977A0)		11
CN001	**VV878700**	Connector Receptacle	1.25FJ 15P TE				01
D0001	**VB941200**	Diode	1SS133,1SS176				01
-0009	**VB941200**	Diode	1SS133,1SS176				01
KLD36	**VY746800**	LED	SEL4725Y TP3 YE		G#2		01
KLD37	**VY746700**	LED	SEL4225R TP3 RE		A2		01
KLD38	**VY746800**	LED	SEL4725Y TP3 YE		A#2		01
KLD39	**VY746700**	LED	SEL4225R TP3 RE		B2		01
KLD40	**VY746700**	LED	SEL4225R TP3 RE		C3		01
KLD41	**VY746800**	LED	SEL4725Y TP3 YE		C#3		01
KLD42	**VY746700**	LED	SEL4225R TP3 RE		D3		01
KLD43	**VY746800**	LED	SEL4725Y TP3 YE		D#3		01
KLD44	**VY746700**	LED	SEL4225R TP3 RE		E3		01
KLD45	**VY746700**	LED	SEL4225R TP3 RE		F3		01
KLD46	**VY746800**	LED	SEL4725Y TP3 YE		F#3		01
KLD47	**VY746700**	LED	SEL4225R TP3 RE		G3		01
KLD48	**VY746800**	LED	SEL4725Y TP3 YE		G#3		01
KLD49	**VY746700**	LED	SEL4225R TP3 RE		A3		01
KLD50	**VY746800**	LED	SEL4725Y TP3 YE		A#3		01
KLD51	**VY746700**	LED	SEL4225R TP3 RE		B3		01
KLD52	**VY746700**	LED	SEL4225R TP3 RE		C4		01
KLD53	**VY746800**	LED	SEL4725Y TP3 YE		C#4		01
LED01	**VD180000**	LED	SLZ-190B-03 RE		DIRECT ACCESS		01
SW001	**VQ371700**	Tact Switch	SKHVBL042A H=7		PAGE<,PAGE>,EXIT,		01
-009	**VQ371700**	Tact Switch	SKHVBL042A H=7		DIRECT ACCESS		01
	V3134500	Circuit Board	PNL		(XV482A0)		
C0001	**UM397470**	Electrolytic Capacitor-KS	47.00 16.0V				01
-0005	**UM397470**	Electrolytic Capacitor-KS	47.00 16.0V				01
C0006	**FG644100**	Ceramic Capacitor-F	0.0100 50V Z				01
C0007	**FG644100**	Ceramic Capacitor-F	0.0100 50V Z				01
C0008	**UM416100**	Electrolytic Capacitor-KS	1.00 50.0V				01
CL001	**VE222400**	Ceramic Resonator	8MHz EFO-FC8004A4				03
CN001	**VH904200**	Connector Base Post	PH-14P SE				01
CN002	**VV878800**	Connector Plug	1.25FJ 15P TE				02
CN003	**VK015600**	Connector Base Post	PH-16P SE				01
CN004	**VB858900**	Connector Base Post	PH-10P SE				01
CN005	**VC166500**	Connector Base Post	PH-12P SE				01
CN006	**VB858200**	Connector Base Post	PH- 3P SE				01
D0001	**VB941200**	Diode	1SS133,1SS176				01
-0037	**VB941200**	Diode	1SS133,1SS176				01
IC001	**XS711200**	IC	MN101C027YB		CPU		06
IC002	**VH885000**	Transistor Array	TD62785P SOURCE				04
IC003	**VJ041400**	Transistor Array	TD62381P				04
IC004	**VJ041400**	Transistor Array	TD62381P				04
KLD18	**VY746700**	LED	SEL4225R TP3 RE		D1		01
KLD19	**VY746800**	LED	SEL4725Y TP3 YE		D#1		01
KLD20	**VY746700**	LED	SEL4225R TP3 RE		E1		01
KLD21	**VY746700**	LED	SEL4225R TP3 RE		F1		01
KLD22	**VY746800**	LED	SEL4725Y TP3 YE		F#1		01
KLD23	**VY746700**	LED	SEL4225R TP3 RE		G1		01
KLD24	**VY746800**	LED	SEL4725Y TP3 YE		G#1		01
KLD25	**VY746700**	LED	SEL4225R TP3 RE		A1		01
KLD26	**VY746800**	LED	SEL4725Y TP3 YE		A#1		01
KLD27	**VY746700**	LED	SEL4225R TP3 RE		B1		01
KLD28	**VY746700**	LED	SEL4225R TP3 RE		C2		01
KLD29	**VY746800**	LED	SEL4725Y TP3 YE		C#2		01
KLD30	**VY746700**	LED	SEL4225R TP3 RE		D2		01
KLD31	**VY746800**	LED	SEL4725Y TP3 YE		D#2		01
KLD32	**VY746700**	LED	SEL4225R TP3 RE		E2		01
KLD33	**VY746700**	LED	SEL4225R TP3 RE		F2		01
KLD34	**VY746800**	LED	SEL4725Y TP3 YE		F#2		01
KLD35	**VY746700**	LED	SEL4225R TP3 RE		G2		01

⋆: New Parts

RANK: Japan only

	REF NO.	PART NO.	DESCRIPTION			REMARKS	QTY	RANK
	LED01	**VD180000**	LED	SLZ-190B-03 RE		DEMO,8BEAT,16BEAT,		01
	-26	**VD180000**	LED	SLZ-190B-03 RE		BALLAD,DANCE,ROCK/R&B,		01
						PIANIST,HELP,SWING/JAZZ,		
						LATIN,COUNTRY,BALL-ROOM,		
						TRAD/WALTZ,DISK/COUSTOM,		
						VOCAL HARMONY,MUSIC DATA-		
						BASE,ACMP ASSIST,HARMONY,		
						AUTO ACCOMPANIMENT(ACMP		
						ON,...,ENDING),BEAT(1)		
	LED27	**VG778600**	LED	SLZ290B-03-T2 GR		BEAT(2-4)		01
	-29	**VG778600**	LED	SLZ290B-03-T2 GR				01
	LED30	**VD180000**	LED	SLZ-190B-03 RE		METRONOME,SYNCHRO,START		01
	-33	**VD180000**	LED	SLZ-190B-03 RE		/STOP,FADE IN/OUT		01
*	LED34	**V3885000**	LED	SEL4414E TP5 GR		OVER		
	LED35	**VS150300**	LED	SEL4214S TP5 RE		SIGNAL		01
	R0001	**HF454470**	Carbon Resistor	47.0 1/4 J				01
	R0002	**HF455100**	Carbon Resistor	100.0 1/4 J				01
	-0015	**HF455100**	Carbon Resistor	100.0 1/4 J				01
	R0016	**HF458470**	Carbon Resistor	470.0K 1/4 J				01
	R0017	**HF456100**	Carbon Resistor	1.0K 1/4 J				01
	R0020	**HF454470**	Carbon Resistor	47.0 1/4 J				01
	-0026	**HF454470**	Carbon Resistor	47.0 1/4 J				01
	R0027	**VD041700**	Jumper Wire	0.55				
	R0028	**HF457220**	Carbon Resistor	22.0K 1/4 J				01
	R0029	**HF455100**	Carbon Resistor	100.0 1/4 J				01
	R0030	**HF455220**	Carbon Resistor	220.0 1/4 J				01
	R0031	**HF455220**	Carbon Resistor	220.0 1/4 J				01
	RA001	**VF771900**	Resistor Array	RGLE8X103J				01
	RA002	**VF771900**	Resistor Array	RGLE8X103J				01
	SW001	**VQ371700**	Tact Switch	SKHVBL042A H=7		DEMO,...,START/STOP,		01
	-037	**VQ371700**	Tact Switch	SKHVBL042A H=7		LCD select		01
	TR001	**VT817300**	Digital Transistor	DTB113ZS TP				01
	TR002	**VT817300**	Digital Transistor	DTB113ZS TP				01
	VR001	**VS368200**	Rotary Variable Resistor	B10.0K RK09K1130BN		CONTRAST		01
⚠		**VT015800**	AC Cord Set	U 2P 2.44m 7A		U		06
⚠		**VT015900**	AC Cord Set	E 2P 2.5m		E		05
⚠		**V2917100**	AC Cord Set	E 2P 2.5m 2.5A		E		05
⚠		**V3126300**	AC Cord Set	E 2P 2.5m		E		
		V3075300	Floppy Disk Drive	MF355F-3252MG F				16
		XT347A00	Speaker	5.0cm 24ohm 60W		TWEETER		
		XU755A00	Speaker	3.0cm 8ohm 60W		MONITOR		10
		XQ797A00	Speaker	16cm 8ohm 60W		WOOFER		12
		VT492000	MA120 Assembly			U		23
		VT492100	MA120 Assembly			E		23
		VV651300	FU120L Assembly			U		
		VV651400	FU120L Assembly			E		13
⚠		**XQ426A00**	Power Transformer	29WP244		U		13
⚠		**XQ427A00**	Power Transformer	GA-120 IEC65		E		14
⚠		**XQ427B00**	Power Transformer	GA-120 IEC65		E		14
		- -	LCD	EDMMPU3BCF		(V333130)		
		VC843500	Push Switch	SDDLB1216A J.U.C.S		POWER		03

*: New Parts

RANK: Japan only

■CVP-700 OVERALL CIRCUIT DIAGRAM 1/3 (DM, PEDAL, PEDAL-VR)

DM

PEDAL
PEDAL-VR
2NA-VU69120

IC1 HD6437043AF12 MAIN CPU

IC2 SWP30B

IC4 VOP3

IC9 SED1335F0B LCDC

IC10 HD63266F FDC

IC20 JG7600B2A GATE ARRAY VIDEO OUT

IC2 MSM51V1000BSP-70LL-T DRAM 4M

IC3 MSM51V16405BSP-70LL-T DRAM 4M

IC5 MSM51V16405BSP-70LL-T DRAM 4M

IC6 MSM51V16405BSP-70LL-T DRAM 4M

IC7 M5M5256DFP-12 SRAM 256K

IC8 MSM51V1000BSP-70LL-T SRAM 1M

IC11 MX23C1610PDC-10 MASK ROM 16M (MAIN H)

IC12 MX23C1610PDC-10 MASK ROM 16M (MAIN L)

IC13 MX23C1610PDC-10 MASK ROM 16M (DATA1)

IC14 MX23C1610PDC-10 MASK ROM 16M (DATA2)

IC15 MSM6253A-2 USART

IC16 AK5351 ADC

IC17 PCM1720U DAC

IC18 PCM1702U DAC

IC20 SN74HC139NSR DECODER

IC21 SN74HC139NSR DECODER

IC22 HD74AC32FPTR OR

IC23 HD74AC32FPTR

IC24 HD74AC32FPTR

IC25 TC74HC74AF D-FF

IC26 TC74HC74AF D-FF

IC27 TC74HC04AF

IC28 LB1443N LED DRIVER

IC29 CX49.152 OSC

IC30 CX49.152 OSC

IC31 CX49.152 OSC

IC32 CSTCC4.00MGW415 OSC

IC33 CX49.152 OSC

IC34 HD14069UBFP

IC35 MAX691

IC36 NJM78L05UA REGULATOR

IC37 NJM79L05UA REGULATOR

IC38 UPC2933T REGULATOR

IC39 SN74HC139NSR

IC40 SN74HC139NSR

IC41 UPC4570G2 OP AMP

IC42 UPC4570G2 OP AMP

IC43 UPC4570G2 OP AMP

IC44 UPC4570G2 OP AMP

IC45 UPC4570G2 OP AMP

IC46 UPC4570G2 OP AMP

IC47 UPC4570G2 OP AMP

IC48 UPC4570G2 OP AMP

IC49 UPC4570G2 OP AMP

IC50 UPC4570G2 OP AMP

■CVP-700 OVERALL CIRCUIT DIAGRAM 2/3（PNGC, PNGR, PNGL, PNR, PNL, EQ-JACK, MV, HP, PL）

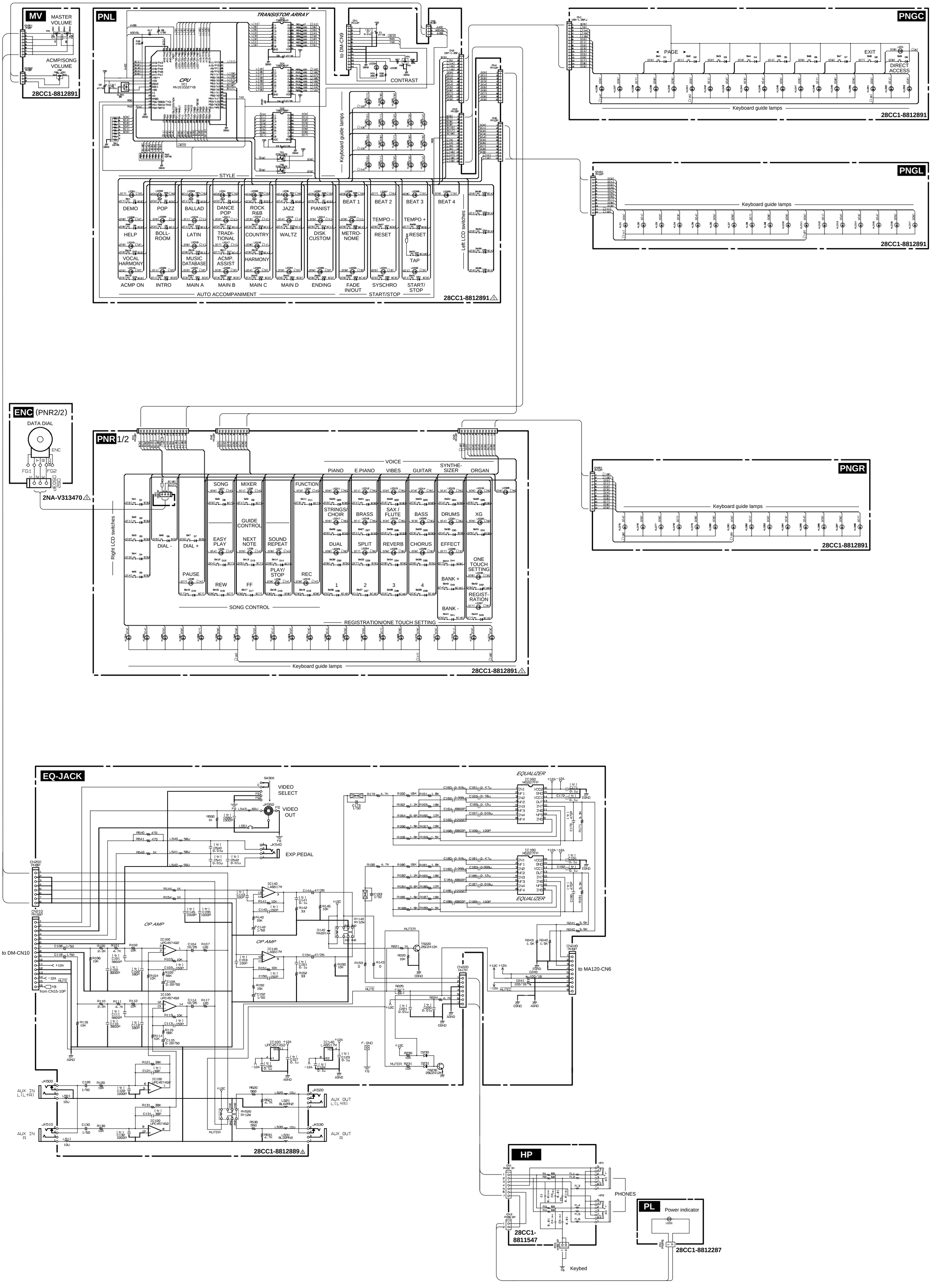

(セ): Ceramic Capacitor

Note: See parts list for details of circuit board component parts.

■CVP-700 OVERALL CIRCUIT DIAGRAM 3/3（AEXL88H, AEXL88L, JACK1, INV, MIC, FU120L, MA120, NETWORK, NW1）

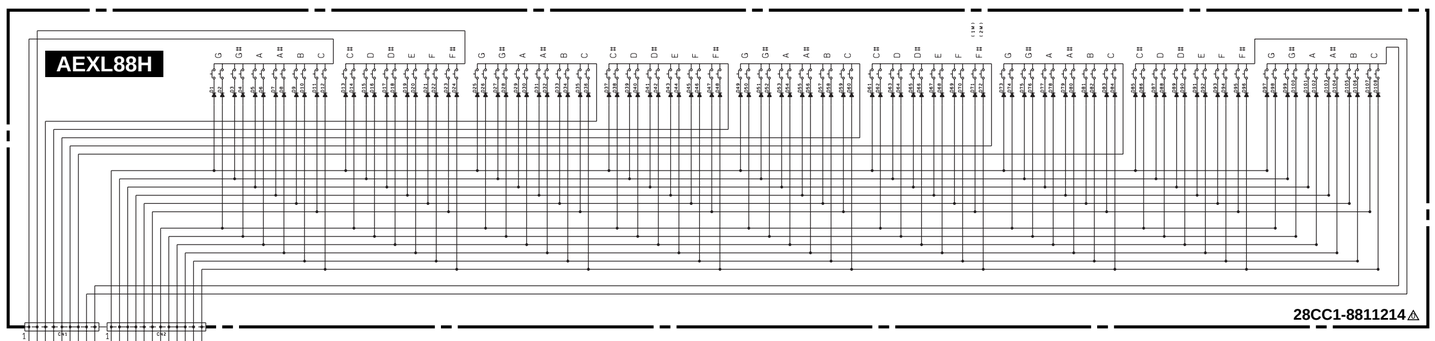

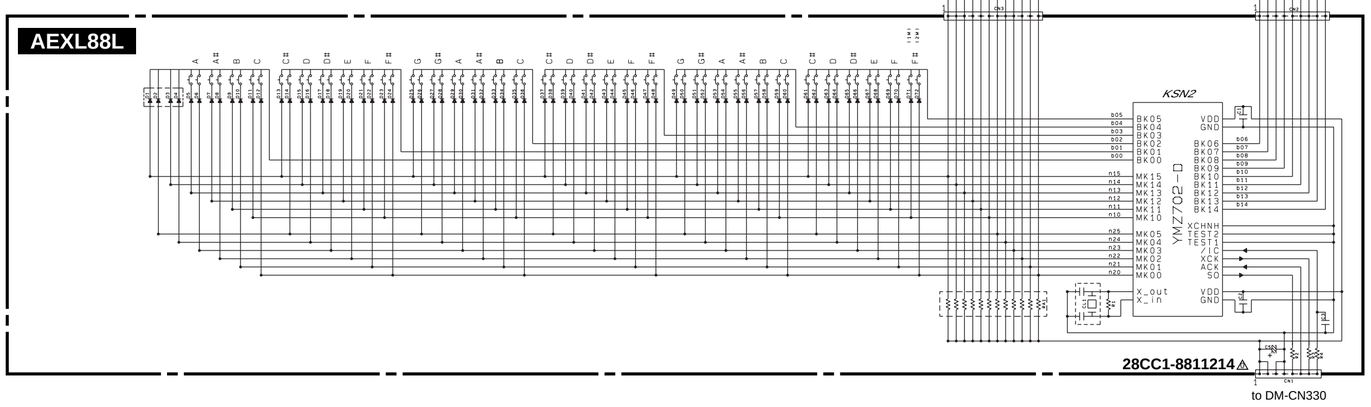

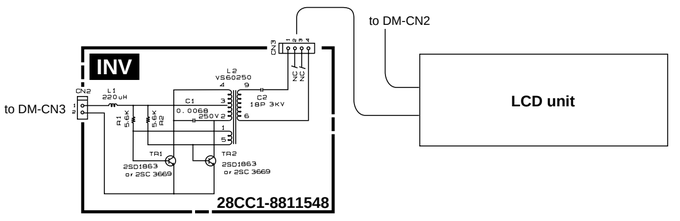

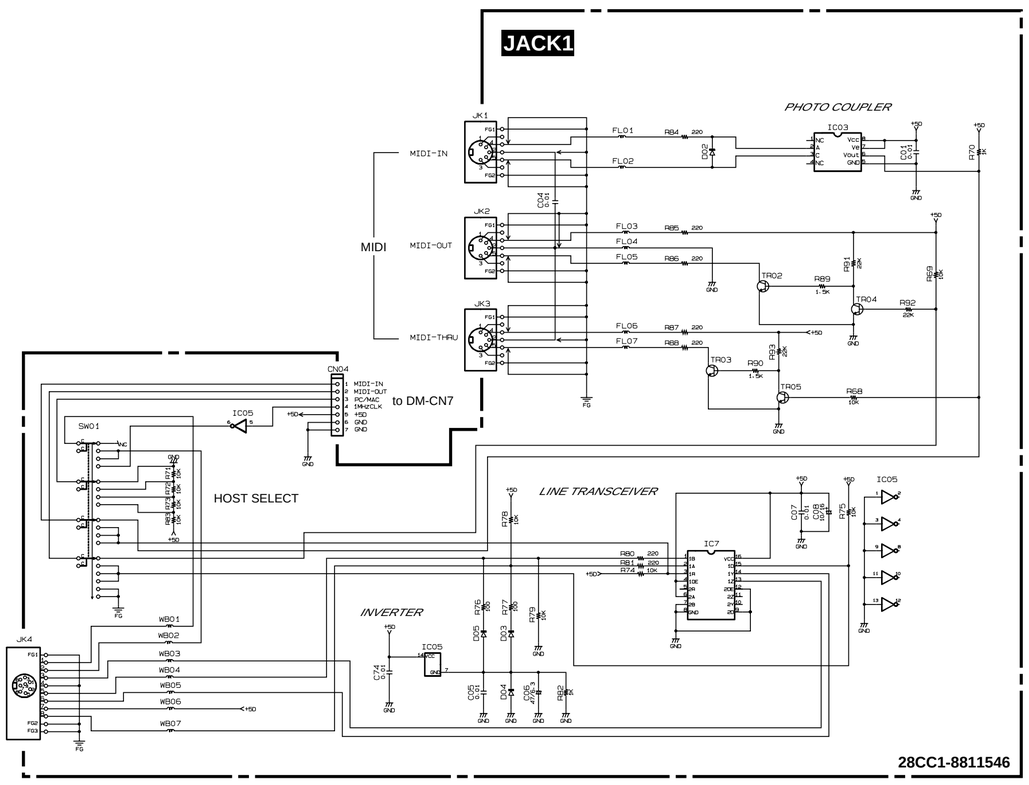

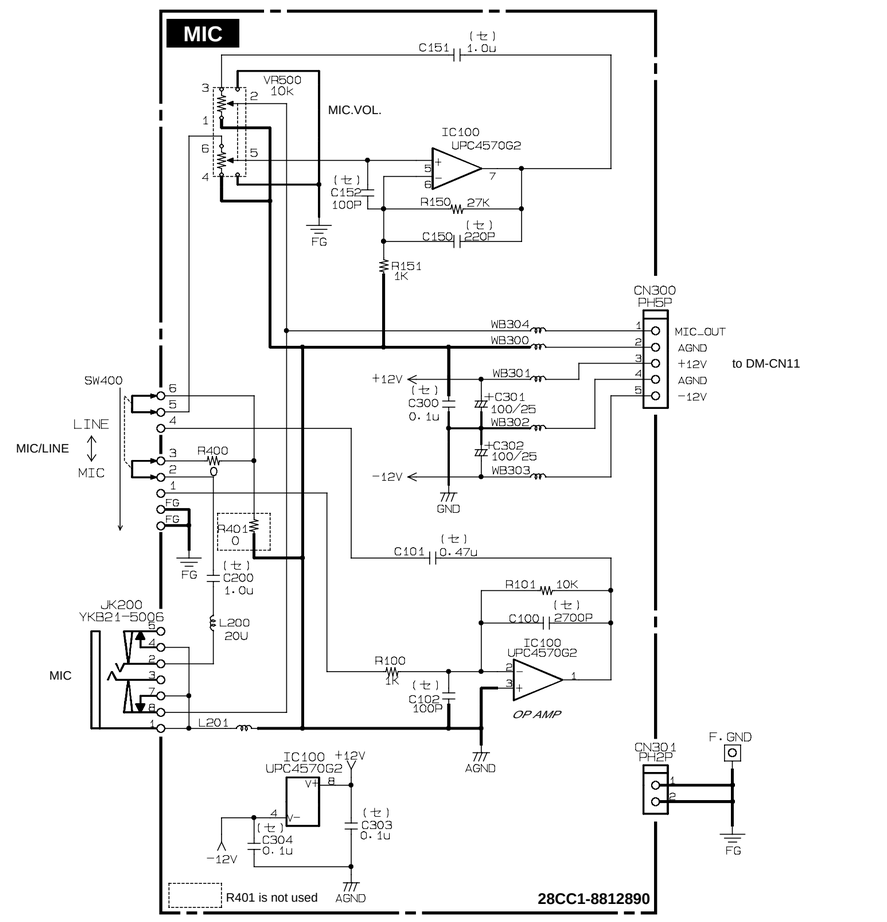

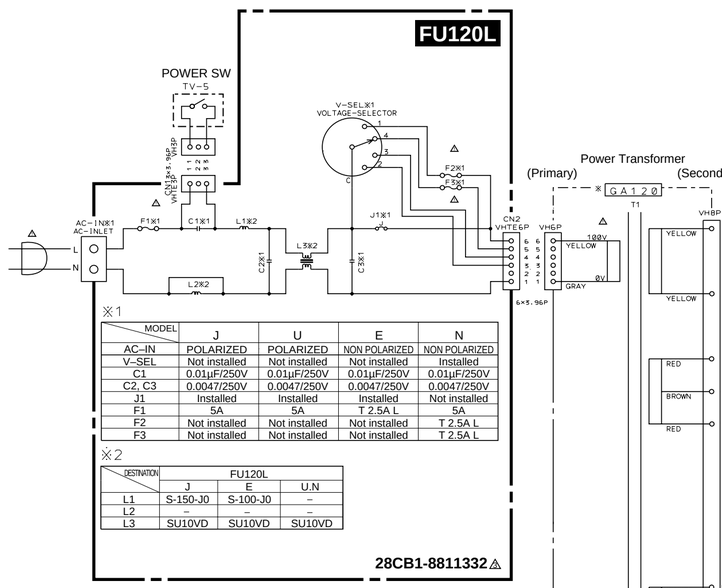

※1

MODEL	J	U	E	N
AC–IN	POLARIZED	POLARIZED	NON POLARIZED	NON POLARIZED
V–SEL	Not installed	Not installed	Not installed	Installed
C1	0.01μF/250V	0.01μF/250V	0.01μF/250V	0.01μF/250V
C2, C3	0.0047/250V	0.0047/250V	0.0047/250V	0.0047/250V
J1	Installed	Installed	Installed	Not installed
F1	5A	5A	T 2.5A L	5A
F2	Not installed	Not installed	Not installed	T 2.5A L
F3	Not installed	Not installed	Not installed	T 2.5A L

※2

DESTINATION	FU120L		
	J	E	U.N
L1	S-150-J0	S-100-J0	–
L2	–	–	–
L3	SU10VD	SU10VD	SU10VD

MODEL	U	E	N
PRIMARY SPECIFICATION	VH6P 6 5 4 3 2 1 — BROWN 120V, GRAY 0V	VH6P 6 5 4 3 2 1 — BLUE 230V, GRAY 0V	VH6P 6 5 4 3 2 1 — RED 240V, BLUE 220V, VIOLET 130V, ORANGE 110V, GRAY 0V
MODEL	PARTS No		
GA120	XQ426, XR745	XQ427, XR746	XQ428, XR757

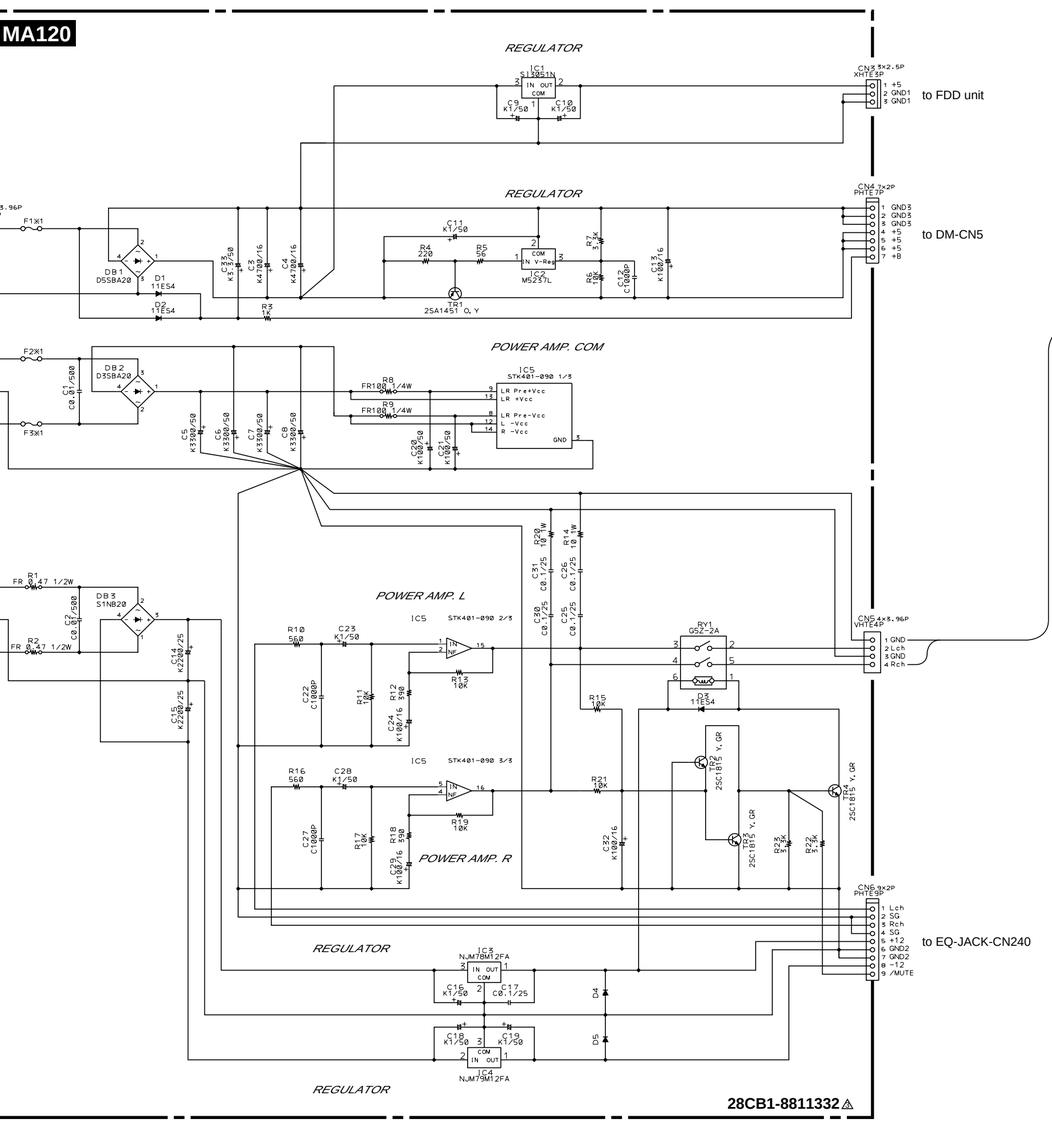

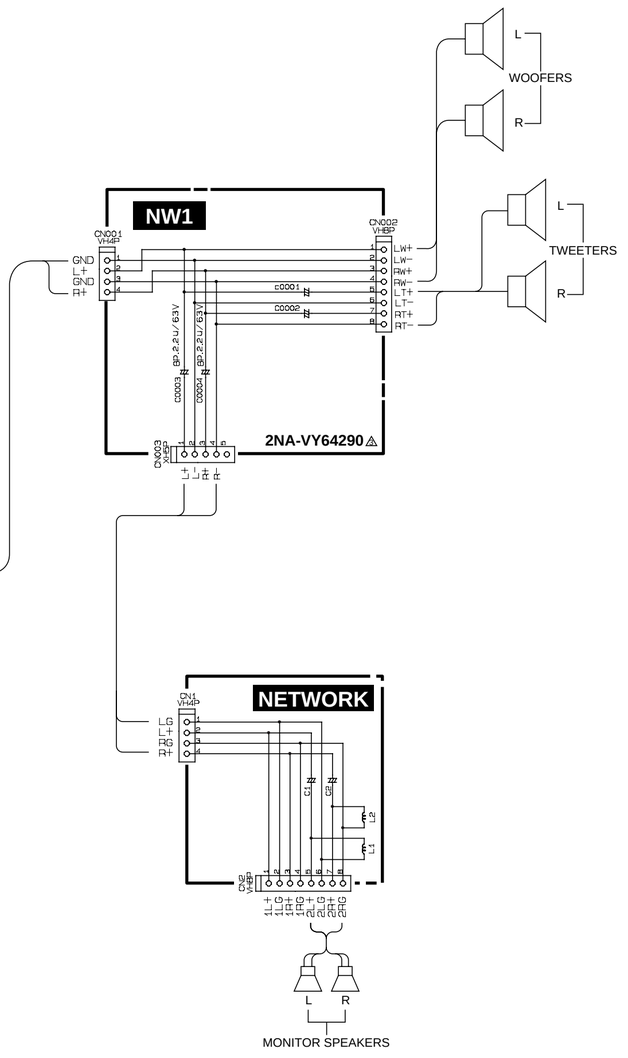

Note : See parts list for details of circuit board component parts.

■TO SERVICE PERSONNEL

Critical Components Information
Components having special characteristics are marked ⚠ and must be replaced with parts having specifications equel to those originally installed.

•SI-3051N(XQ437A00) REGULATOR +5V 1 : GND 2 : OUTPUT 3 : INPUT	•M5237L(XQ667A00) REGULATOR +5V 1 : INPUT 2 : GND 3 : VOLTAGE adj.	•NJM78M12FA(XJ602A00) REGULATOR +12V 1 : OUTPUT 2 : COMMON 3 : INPUT	•NJM79M12FA(XD343A00) REGULATOR -12V 1 : OUTPUT 2 : INPUT 3 : COMMON	•11ES4(VB481900) DIODE 1 : ANODE 2 : CATHODE	•D5SBA20 6.0A(VK421800) D3SBA20-4103 4.0A (VQ111500) DIODE STACK	•S1NB20 1.0A 200V (VR253700) DIODE STACK	•MJM78L05UA(XJ598A00) REGULATOR +5V 1:OUTPUT 2:COMMON 3:INPUT	•MJM79L05UA(XN086A00) REGULATOR -5V 1:COMMON 2:INPUT 3:OUTPUT	•UPC2933T-E1(XS516A00) REGULATOR +3.3V 1:V in 2:GND 3:V out

(セ): Ceramic Capacitor

CVP-700