Clavinova®

CVP-203

SERVICE MANUAL



CONTENTS

SPECIFICATIONS 3
PANEL LAYOUT 5
CIRCUIT BOARD LAYOUT & WIRING 8
DISASSEMBLY PROCEDURE 10
LSI PIN DESCRIPTION 22
IC BLOCK DIAGRAM 27
CIRCUIT BOARDS 28
TEST PROGRAM 46
SYSTEM RESET 50
MIDI IMPLEMENTATION CHART 51
MIDI DATA FORMAT 53
PARTS LIST
BLOCK DIAGRAM
OVERALL CIRCUIT DIAGRAM

This document is printed on chlorine free (ECF) paper with soy ink.

CL 001663
20010901-280000

YAMAHA
HAMAMATSU, JAPAN
1.753K-2731 Printed in Japan '01.09

IMPORTANT NOTICE

This manual has been provided for the use of authorized Yamaha Retailers and their service personnel. It has been assumed that basic service procedures inherent to the industry, and more specifically Yamaha Products, are already known and understood by the users, and have therefore not been restated.

WARNING: Failure to follow appropriate service and safety procedures when servicing this product may result in personal injury, destruction of expensive components and failure of the product to perform as specified. For these reasons, we advise all Yamaha product owners that all service required should be performed by an authorized Yamaha Retailer or the appointed service representative.

IMPORTANT: This presentation or sale of this manual to any individual or firm does not constitute authorization, certification, recognition of any applicable technical capabilities, or establish a principal-agent relationship of any form.

The data provided is belived to be accurate and applicable to the unit(s) indicated on the cover. The research engineering, and service departments of Yamaha are continually striving to improve Yamaha products. Modifications are, therefore, inevitable and changes in specification are subject to change without notice or obligation to retrofit. Should any discrepancy appear to exist, please contact the distributor's Service Division.

WARNING: Static discharges can destroy expensive components. Discharge any static electricity your body may have accumulated by grounding yourself to the ground bus in the unit (heavy gauge black wires connect to this bus).

IMPORTANT: Turn the unit OFF during disassembly and parts replacement. Recheck all work before you apply power to the unit.

WARNING: CHEMICAL CONTENT NOTICE!

The solder used in the production of this product contains LEAD. In addition, other electrical/electronic and/or plastic (where applicable) components may also contain traces of chemicals found by the California Health and Welfare Agency (and possibly other entities) to cause cancer and/or birth defects or other reproductive harm.

DO NOT PLACE SOLDER, ELECTRICAL/ELECTRONIC OR PLASTIC COMPONENTS IN YOUR MOUTH FOR ANY REASON WHAT SO EVER!

Avoid prolonged, unprotected contact between solder and your skin! When soldering, do not inhale solder fumes or expose eyes to solder/flux vapor!

If you come in contact with solder or components located inside the enclosure of this product, wash your hands before handling food.

IMPORTANT NOTICE FOR THE UNITED KINGDOM

Connecting the Plug and Cord

IMPORTANT. The wires in this main lead are coloured in accordance with the following code:

BLUE: NEUTRAL
BROWN: LIVE

As the colours of the wires in the main lead of this apparatus may not correspond with the coloured markings identifying the terminals in your plug, proceed as follows:

The BLUE wire must be connected to the terminal that is marked with the letter N (or coloured BLACK).

The BROWN wire must be connected to the terminal that is marked with the letter L (or coloured RED).

Be certain that neither core is connected to the earth terminal of the three pin plug.

■ WARNING

Components having special characteristics are marked ⚠ and must be replaced with parts having specification equal to those originally installed.

■ SPECIFICATIONS

◯: available

Sound Source			AWM Dynamic Stereo Sampling
Display			320 x 240 dots backlit graphic LCD
Keyboard			88 keys (A-1 - C7)
Voice	**Polyphony (max)**		64
	Voice Selection		308 voices + 480 XG voices + 16 Drum Kits
		Regular Voice	276
		Natural Voice	21
		Sweet Voice	8
		Cool Voice	2
		Live Voice	1
	Sound creator		◯
Effects	**Effect Blocks**	**Reverb**	2
		Chorus	2
		DSP	2
	Effect Types	**REVERB1**	28+3 User
		REVERB2	5
		CHORUS1	21+3 User
		CHORUS2	3
		DSP1	101+3 User
		DSP2	12
		Brilliance	5
Accompaniment Style	**Number of Accompaniment Styles**		174
	Number of Session Styles		12
	Number of Pianist Styles		36
	Number of Piano Combo Styles		18
	Fingering		Single Finger, Fingered, Fingered On Bass, Multi Finger, AI Fingered, Full Keyboard, AI Full Keyboard
	Style Creator		◯
	OTS (One Touch Setting)		Accompaniment Style
	OTS link		◯
	Music Finder		Approximately 2500 records
		Edit	◯
Song	**Format**		SMF (Format 0,1), ESEQ
	Preset Songs		◯
	Guide		Follow Lights, Any Key, Karao-Key
		Guide Lamp	88 Red
	Lyrics		◯
	Recording		Quick Recording, Multi Track Recording, Step Recording, Song Editing
		Record Channels	16
Memory Device	**Floppy Disk (2HD,2DD)**		◯
	Flash Memory (internal)		1 MB
	Flash Availability		Song (SMF), Style (SFF), Registration, Voice, etc.
Tempo	**Tempo Range**		5 - 500
	Tap Tempo		◯
	Metronome		◯
		Sound	Bell on/off, Human Voices (5 languages)
Registration Memory	**Buttons**		8
	Regist Sequence		◯
	Freeze		◯

Others	**Demo**	Function, Voice, Style
	Language	6 languages (English, Japanese, German, French, Spanish, Italian)
	Help	◯
	Direct Access	◯
	Piano setting button (including Piano Lock)	◯
	Master Volume	◯
	Fade In/Out	◯
	Transpose	Keyboard/Song/Master
	Tuning	◯
	Tuning Curve	Flat/Stretch (Natural Piano Voice only)
	Scale	Equal Temperament, Pure Major/Pure Minor, Pythagorean, Mean-Tone, Werckmeister/Kirnberger, Arabic 1/2
	Touch Response	5 level
Jacks/Connectors		PHONES x 2, MIDI (THRU, OUT, IN), TO HOST, HOST SELECT SW, AUX PEDAL, AUX IN (L/L+R), AUX OUT (LEVEL FIXED) (L/R), AUX OUT (L/L+R)
Pedals	**Number of Pedals**	3
	Pedal Functions	VOLUME, SUSTAIN, SOSTENUTO, SOFT, GLIDE, PORTAMENTO, PITCHBEND, MODULATION, DSP VARIATION, VIBROTOR ON/OFF, SONG START/STOP, STYLE START/STOP, etc.
Amplifiers/ Speakers	**Amplifiers**	40 W x 2
	Speakers	(16 cm + 5 cm) x 2
Rated Voltage		AC100 V 50/60 Hz
Dimensions [W x D x H] (with the Music Stand)		1381.5 x 597.7 x 899.6 mm [56-3/8" x 24-3/8" x 43-3/4"] (1381.5 x 597.7 x 1071.2 mm) [56-3/8" x 24-3/8" x 36-11/16"]
Weight		66 Kg (145 lbs., 8 oz)
Output Impedance		PHONES : 33 ohm load , AUX OUT : 600 ohm

■ PANEL LAYOUT

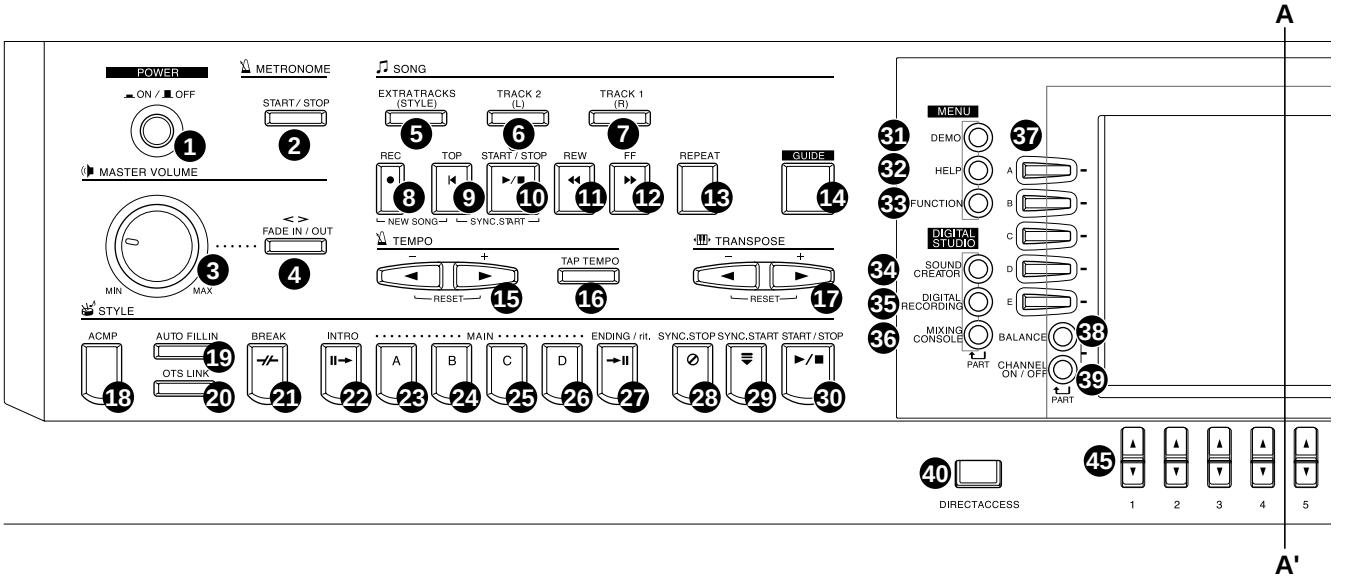

POWER
1 [ON / OFF] button (POWER)

METRONOME
2 [START / STOP] button (METRONOME)

MASTER VOLUME
3 [MASTER VOLUME] dial
4 [FADE IN / OUT] button

SONG
5 [EXTRA TRACKS (STYLE)] button
6 [TRACK 2 (L)] button
7 [TRACK 1 (R)] button
8 [REC] button
9 [TOP] button
10 [START / STOP] button (SONG)
11 [REW] button
12 [FF] button
13 [REPEAT] button
14 [GUIDE] button

TEMPO
15 [◄] [►] buttons (TEMPO)
16 [TAP TEMPO] button

TRANSPOSE
17 [◄] [►] buttons (TRANSPOSE)

STYLE
18 [ACMP] button
19 [AUTO FILLIN] button
20 [OTS LINK] button
21 [BREAK] button
22 [INTRO] button
23 MAIN [A] button
24 MAIN [B] button
25 MAIN [C] button
26 MAIN [D] button
27 [ENDING / rit.] button
28 [SYNC.STOP] button
29 [SYNC.START] button
30 [START / STOP] button (STYLE)

MENU
31 [DEMO] button
32 [HELP] button
33 [FUNCTION] button

DIGITAL STUDIO
34 [SOUND CREATOR] button
35 [DIGITAL RECORDING] button
36 [MIXING CONSOLE] button

DISPLAY CONTROL
37 [A] - [J] buttons
38 [BALANCE] button
39 [CHANNEL ON / OFF] button
40 [DIRECT ACCESS] button
41 [BACK] button
42 [NEXT] button

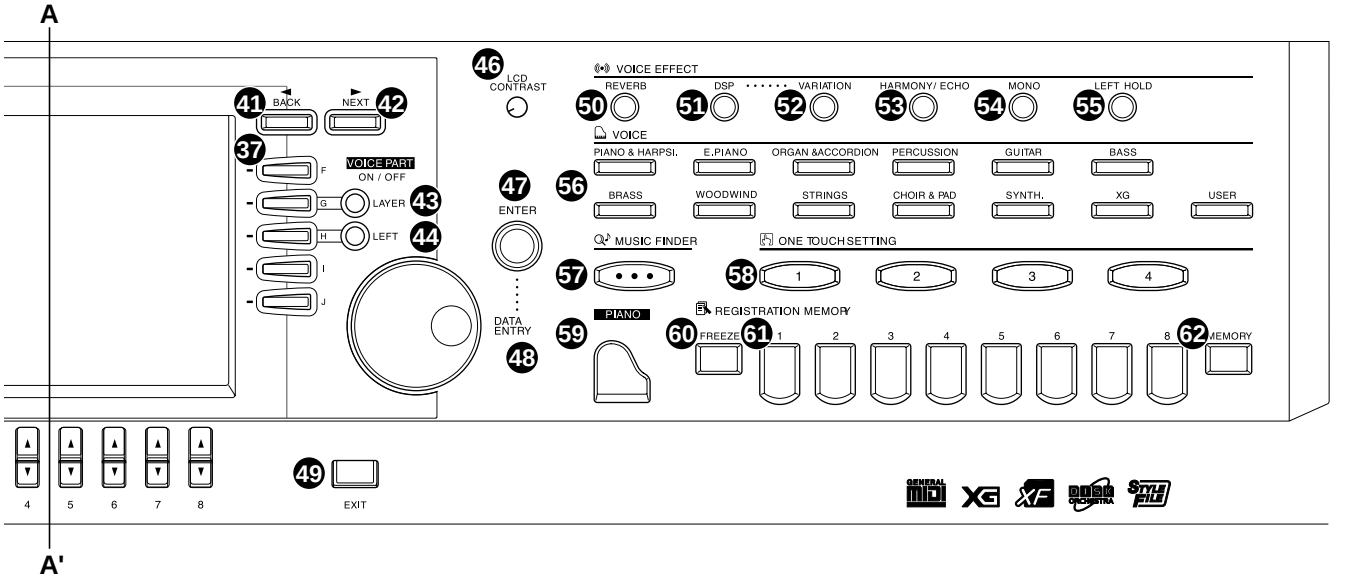

43 VOICE PART ON / OFF [LAYER] button

44 VOICE PART ON / OFF [LEFT] button

45 [1▲▼] - [8▲▼] buttons

46 [LCD CONTRAST] knob

47 [ENTER] button

48 [DATA ENTRY] dial

49 [EXIT] button

VOICE EFFECT

50 [REVERB] button

51 [DSP] button

52 [VARIATION] button

53 [HARMONY / ECHO] button

54 [MONO] button

55 [LEFT HOLD] button

VOICE

56 VOICE buttons

MUSIC FINDER

57 [MUSIC FINDER] button

ONE TOUCH SETTING

58 [1] - [4] buttons (ONE TOUCH SETTING)

PIANO Setting

59 [PIANO] button

REGISTRATION MEMORY

60 [FREEZE] button

61 [1] – [8] buttons (REGISTRATION MEMORY)

62 [MEMORY] button

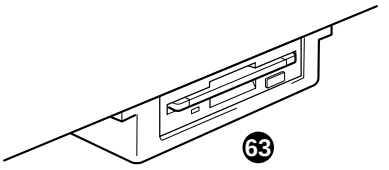

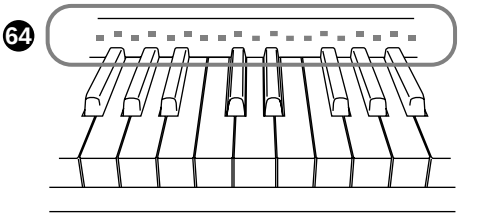

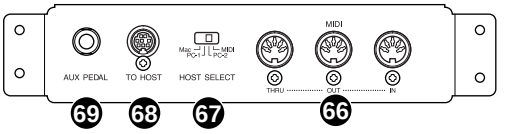

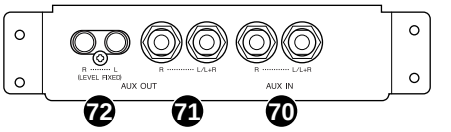

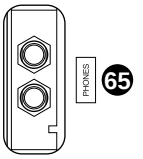

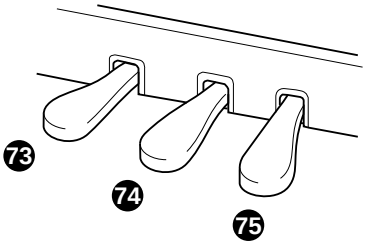

63 Floppy disk drive (3.5”)

64 Keyboard guide lamps

Microphone and Headphone Connectors

65 [PHONES] jacks

Connectors

66 MIDI [THRU] [OUT] [IN] terminals

67 [HOST SELECT] switch

68 [TO HOST] terminal

69 [AUX PEDAL] jack

70 AUX IN [L / L+R] [R] jacks

71 AUX OUT [L / L+R] [R] jacks

72 AUX OUT (LEVEL FIXED) [L] [R] jacks

Pedals

73 Left pedal

74 Sostenuto pedal

75 Damper pedal

■ CIRCUIT BOARD LAYOUT & WIRING

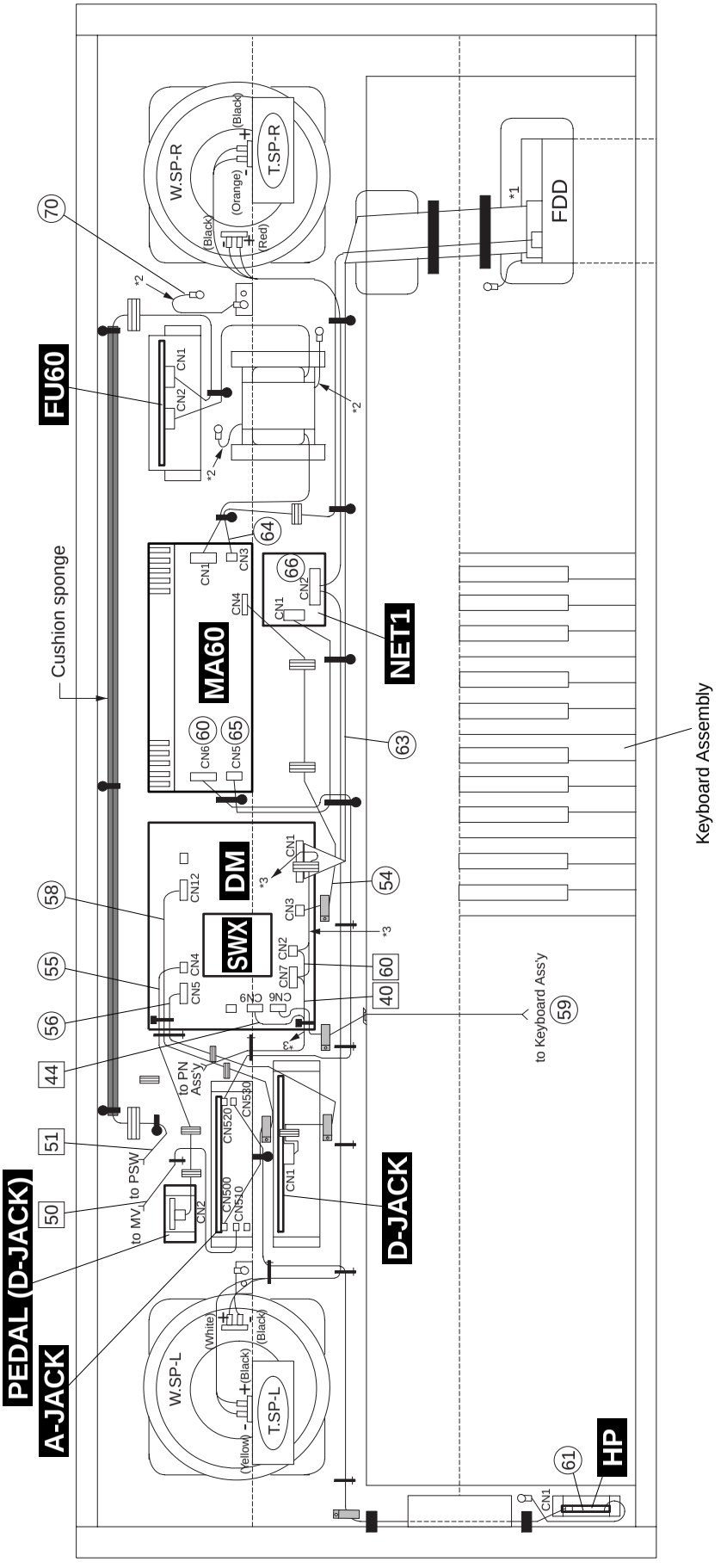

Location	Part No.	Connector Assembly	Destination		Remarks
(54)	(V807500)	+5V-LF	DM-CN3	MA60-CN4	7P-550
(55)	(VK10560)	KRD-KRD	DM-CN4	PEDAL-CN2	5P-300
(56)	(V807520)	DJACK-LF	DM-CN5	D-JACK-CN1	10P-550
(58)	(V807510)	AJACK-LF	DM-CN12	A-JACK-CN500	12P-600
(59)	V7565100	MK-LF	DM-CN6	GH-DclSW L-CN1	8P-500
(60)	(VK11390)	KRD-KRD	A-JACK-CN520	MA60-CN6	9P-550
(61)	(V807490)	HP-LF	A-JACK-CN530	HP-CN1	7P-750
(63)	V7530900	FDD-SIG	DM-CN1	FDD	34P FLAT
(64)	V4269800	FDD POWER	MA60-CN3	FDD (Power Supply)	3P L=530
(65)	(V753110)	PU-NW	MA60-CN5	NET1-CN1	4P L=400
(66)	(V753130)	SP	NET1-CN2	W.SP-L/R,T.SP-L/R	8P-950
(70)	(V756950)	GND	Panel rail	Keybed	L=180 U only
[44]	(V801150)	PND-LF	PNR-CN1	DM-CN9	11P-850
[50]	(V222620)	VOL	MV-CN301	A-JACK-CN510	L=400
[51]	(V753040)	PSW	PSW	FU60-CN1	3P-1400
[40]	(V801140)	LCD-LF	LCD	DM-CN7	14P-450
[60]	(V753050)	BACK LIGHT	INV-CN401	DM-CN2	3P-450

NOTE1) The parts with "( )" in "Part No." are not available as service parts.

NOTE2) The meaning of symbols.

: Ferrite core

: Cable holder

: Cord binder

: Filament tape

: Lug terminal

: Insulation lock tie

: Conductive adhesive tape

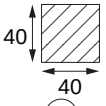

*1) • (63) Wire Harness shall be installed with its connector guide looks down.

• (63) and (64) Wire Harness shall be installed with slack off as the following drawing.

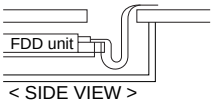

*2) U.S.A. model only

*3) U.S.A. model only

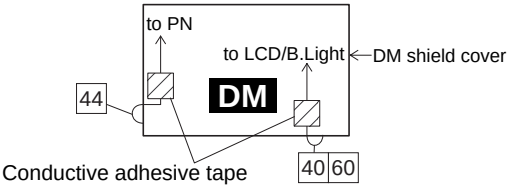

■ DISASSEMBLY PROCEDURE

1. Floppy Disk Drive

(Time required: About 10 minutes)

1-1 Remove the four (4) screws marked [50A]. The FDD unit can then be removed. (Fig. 1)

1-2 Remove the four (4) screws marked [8A]. The FDD cover can then be removed. (Fig. 2)

1-3 Remove the screw marked [3A]. The earth wire can then be removed. (Fig. 3)

1-4 Remove the three (3) screws marked [3B]. The floppy disk drive can then be removed from the FDD holder. (Fig. 3)

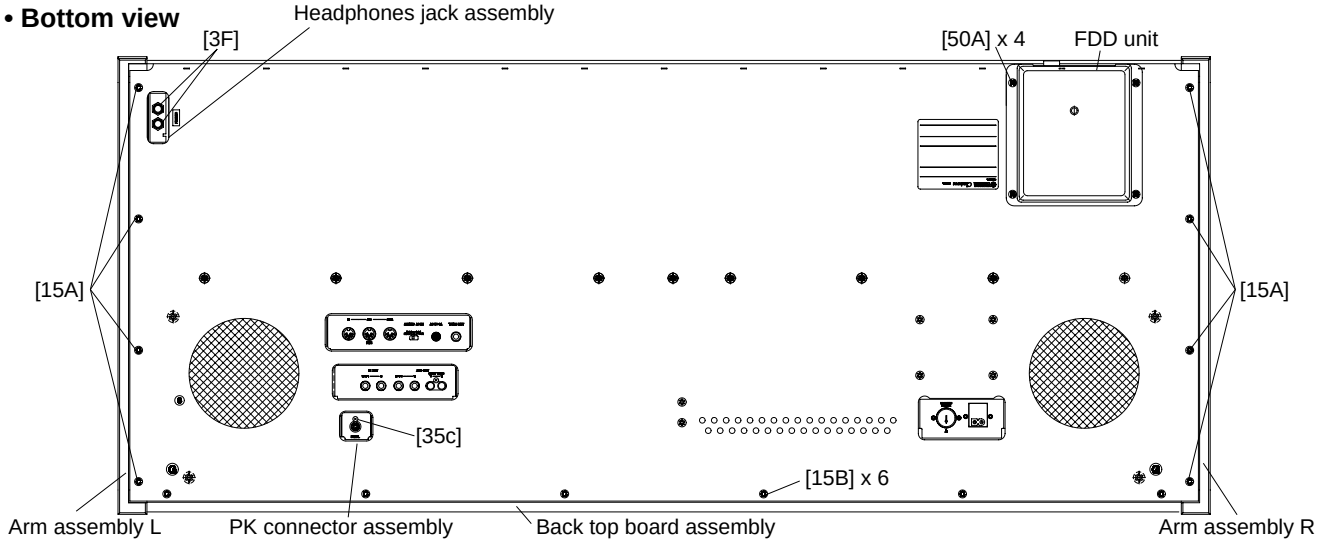

[3F]: Hexagonal Nut 12.0x14x2 MFZN2BL (VB508600)
[15]: Truss Head Tapping Screw-1 3.5x25 MFZN2BL (EN630190)
[35c]: Bind Head Tapping Screw-B 3.0x8 MFZN2BL (EP600190)
[50]: Bind Head Tapping Screw-1 3.5x14 MFZN2BL (EP030250)

Fig. 1

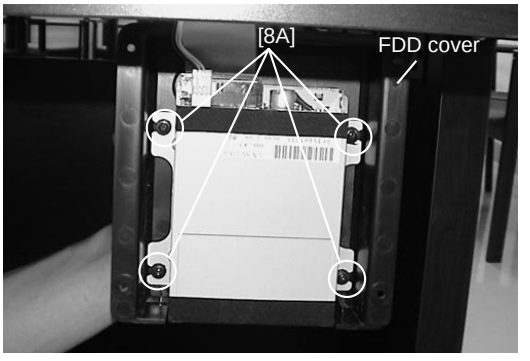

[8A]: PW Head Tapping Screw-B 3.0x8-8 MFZN2BL (V2276900)

Fig. 2

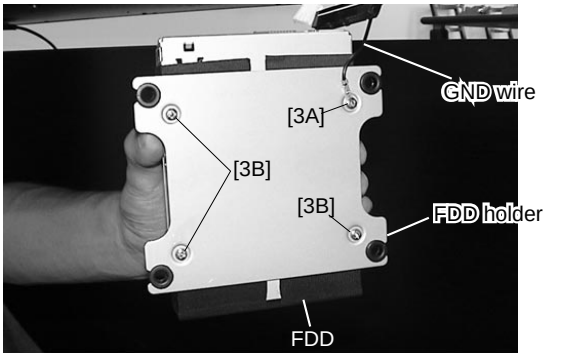

[3]: Bind Head Screw 3.0x5 MFZN2Y (EG330150)

Fig. 3

2. Music Rest Assembly

(Time required: About 5 minutes)

2-1 Remove the four (4) screws marked [7A]. The music rest assembly can then be removed. (Fig. 4)

3. Back Board Assembly

(Time required: About 5 minutes)

3-1 Remove the two (2) screws marked [CA] and the four (4) screws marked [D]. The back board assembly can then be removed. (Fig. 5)

4. Top Board Assembly

(Time required: About 5 minutes)

4-1 Remove the three (3) screws marked [5A]. The top board assembly can then be removed. (Fig. 5)

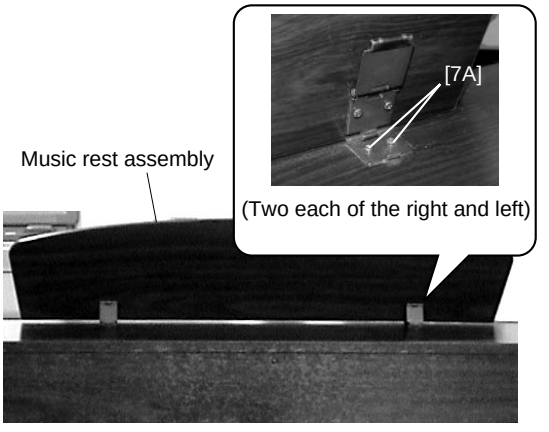

[7A]: Bind Head Tapping Screw-1 3.0x16 MFZN2BL (EP030310)

Fig. 4

• Rear view

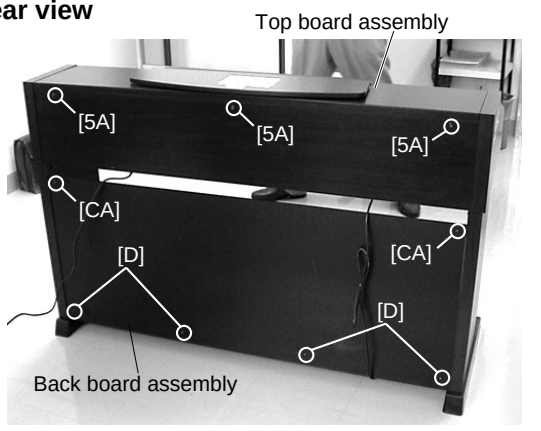

[CA]: Truss Head Screw 4.0x12 MFZN2BL (VP367300)
[D]: Truss Head Tapping Screw-1 4.0x20 MFZN2BL (03747290)
[5A]: Truss Head Screw 4.0x16 MFZN2BL (V6207400)

Fig. 5

5. Circuit Boards and Assemblies (Main Unit - PART1) (Time required: About 5 minutes each)

Remove the following screws after removing the top board assembly. Each unit and assembly can then be removed. (Table-1)

Circuit Board and Unit	Ref. No.	Screw	QTY	Fig.
SWX *1	[41]	Board spacer	4	6
PK Connector Assembly	[51A]	Bind Head Tapping Screw-1 3.5x12 MFZN2Y (EP030240)	2	6
A-JACK Assembly	[51B]	Bind Head Tapping Screw-1 3.5x12 MFZN2Y (EP030240)	4	6
MA Cover (U.S.A. model only)	[106A]	Bind Head Tapping Screw-1 3.5x12 MFZN2Y (EP030240)	4	6
MA60 Assembly	[106B]	Bind Head Tapping Screw-1 3.5x12 MFZN2Y (EP030240)	2	6
DM Cover Assembly (U.S.A. model only)	[106C]	Bind Head Tapping Screw-1 3.5x12 MFZN2Y (EP030240)	7	6
FU Cover (U.S.A. model only)	[106D]	Bind Head Tapping Screw-1 3.5x12 MFZN2Y (EP030240)	2	6
FU60 Assembly	[106E]	Bind Head Tapping Screw-1 3.5x12 MFZN2Y (EP030240)	2	6

Table-1

*1 Be careful of insertion position of spacer when you install the circuit board. Must not use spacer inserted in the reverse once.

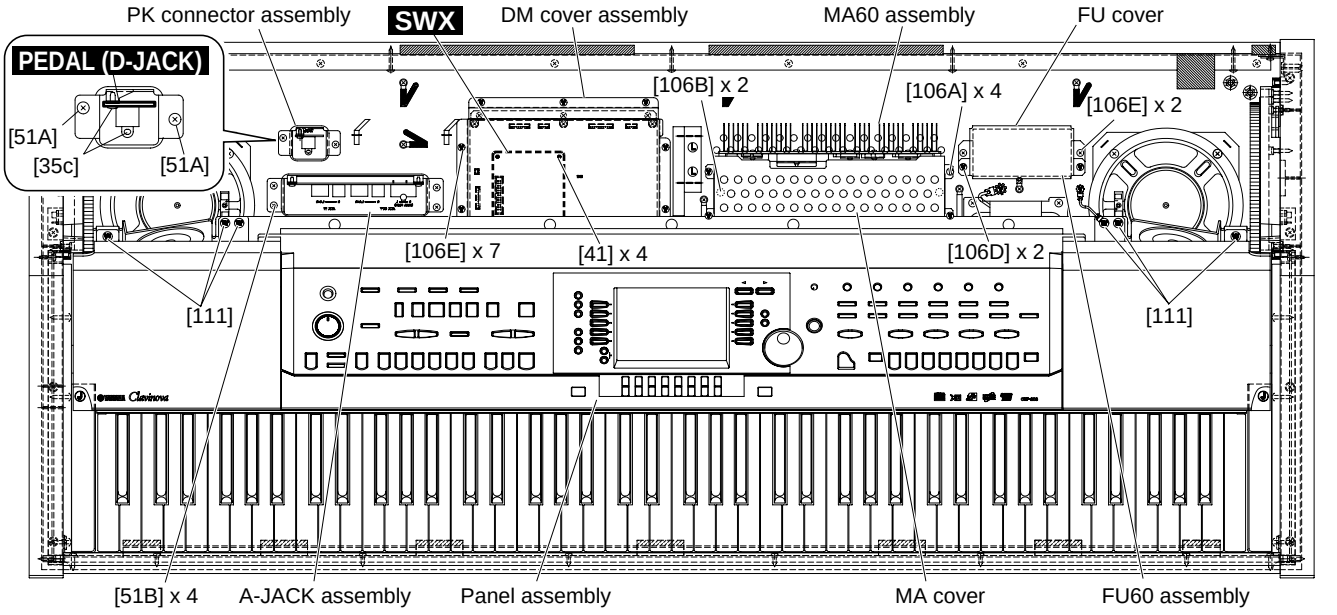

[35c]: Bind Head Tapping Screw-B 3.0x8 MFZN2BL (EP600190)

[111]: Bind Head Tapping Screw-B 4.0x10 MFZN2Y (EP640130)

Fig. 6

6. PEDAL (D-JACK) Circuit Board

(Time required: About 10 minutes)

6-1 Disconnect the PK-LF cable. (Fig. 7)

6-2 Remove the PK connector assembly. (See procedure 5.)

6-3 Remove the two (2) screws marked [35c]. The PEDAL (D-JACK) circuit board can then be removed. (Fig. 1, Fig. 6)

7. A-JACK Circuit Board

(Time required: About 10 minutes)

7-1 Remove the A-JACK assembly. (See procedure 5.)

7-2 Remove the four (4) hexagonal nuts marked [4A] and the five (5) screws marked [5B]. The A-JACK circuit board can then be removed. (Fig. 8)

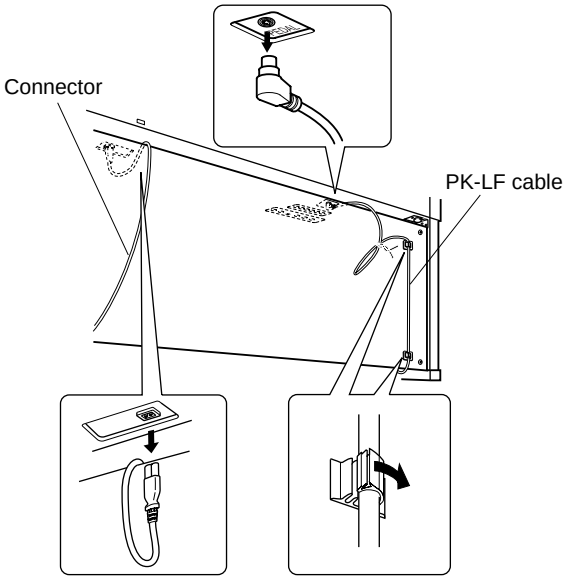

Fig. 7

• **Bottom view**

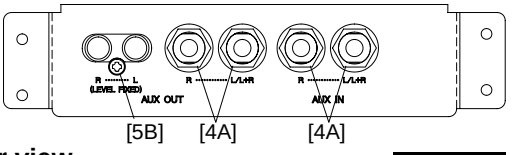

• **Rear view**

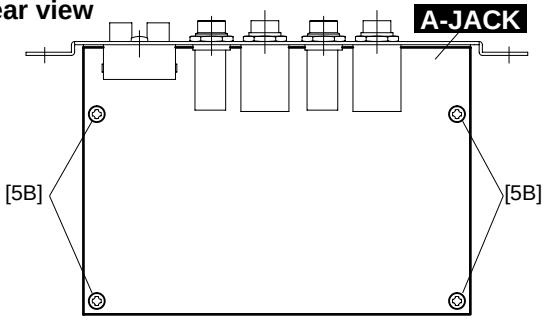

[4A]: Hexagonal Nut 12.0x14x2 MFZN2BL (VB508600)
[5B]: Bind Head Tapping Screw-B 3.0x8 MFZN2BL (EP600190)

Fig. 8

8. FU60 Circuit Board

(Time required: About 10 minutes)

8-1 Remove the FU60 assembly. (See procedure 5.)

8-2 Remove the two (2) screws marked [1A] and the two (2) screws marked [6A]. The FU60 circuit board can then be removed. (Fig. 9)

8-3 Remove the two (2) screws marked [4B]. (Fig. 9) (General export model only)

9. MA60 Circuit Board

(Time required: About 10 minutes)

9-1 Remove the MA60 assembly. (See procedure 5.)

9-2 Remove the five (5) screws marked [1B], the four (4) screws marked [2A] and the screw marked [3C]. The MA60 circuit board can then be removed. (Fig. 10)

• FU60 Assembly

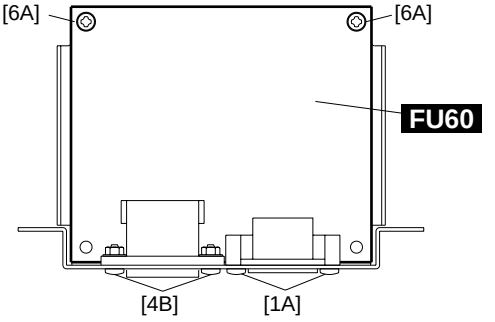

[1A]: Bind Head Tapping Screw-B 3.0x8 MFZN2BL (EP600190)
[4B]: Bind Head Screw 3.0x10 MFZN2BL (EG330380)
[6A]: Bind Head Tapping Screw-B 3.0x12 MFZN2Y (VE683000)

Fig. 9

• MA60 Assembly

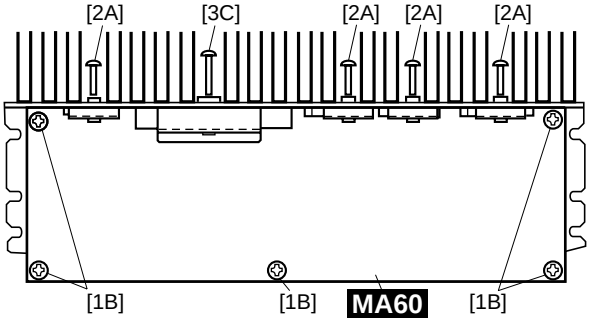

[1B]: Bind Head Tapping Screw-B 4.0x8 MFZN2Y (EP640410)
[2A]: Bind Head Tapping Screw-B 3.0x10 MFZN2Y (EP600220)
[3C]: Bind Head Tapping Screw-B 3.0x16 MFZN2Y (EP600390)

Fig. 10

10. Key Cover Assembly

(Time required: About 10 minutes)

10-1 Close the key cover.

10-2 Remove the top board assembly. (See procedure 4.)

10-3 Remove the screw marked [27A]. The rack cover (L) can then be removed. (Fig. 11)

* The rack cover (R) can then be removed in the same manner.

10-4 Set the left end of the rod at the slits of the guide and then lift the rear key cover assembly. (Fig. 12)

10-5 Lean slightly the key cover assembly so that the guide pin can be removed from the guide rail. (Fig. 13)

* When removing, be sure not to make scratches on the side cover.

* When reinstalling the key cover assembly, apply a masking shield tape around the guide rail to prevent from making scratches on the assembly.

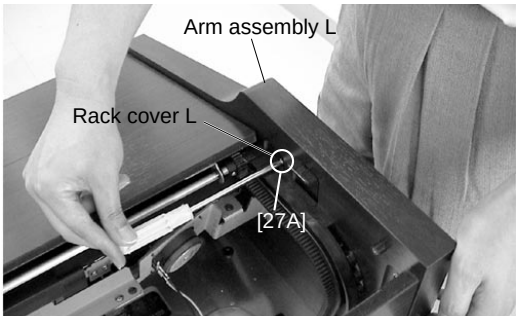

[27]: Bind Head Tapping Screw-B 3.0x8 MFZN2Y (EP600250)

Fig. 11

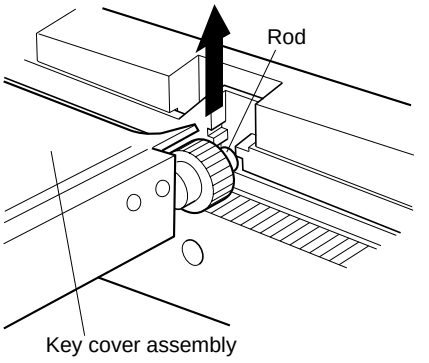

Fig. 12

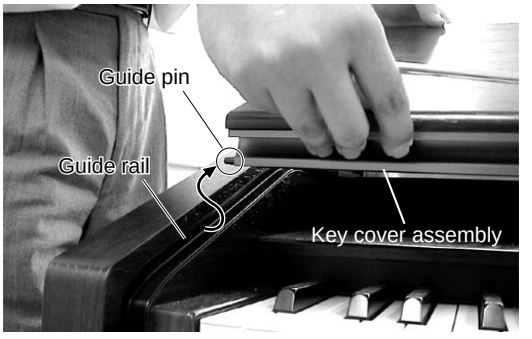

Fig. 13

11. Panel Assembly

(Time required: About 15 minutes)

11-1 Remove the top board assembly. (See procedure 4.)

11-2 Remove the key cover assembly. (See procedure 10.)

11-3 Remove the six (6) screws marked [111]. The panel assembly can then be removed. (Fig. 6)

12. Circuit Boards and Assemblies (Main Unit - PART2) (Time required: About 5 minutes each)

Remove the following screws after removing the panel assembly. Each unit and assembly can then be removed. (Table-2)

Circuit Board and Unit	Ref. No.	Screw	QTY	Fig.
Rack assembly (L, R)	[8B]	Bind Head Tapping Screw-1 3.5x20 MFZN2Y (EP030470)	10	16
DM	[27B]	Bind Head Tapping Screw-B 3.0x8 MFZN2Y (EP600250)	6	14
Monitor Speaker (R)	[37c]	Bind Head Tapping Screw-B 3.0x8 MFZN2BL (EP600190)	4	15
Monitor Speaker (L)	[38c]	Bind Head Tapping Screw-B 3.0x8 MFZN2BL (EP600190)	4	15
NET1	[44]	Bind Head Tapping Screw-1 3.5x20 MFZN2Y (EP030470)	4	14
D-JACK Assembly	[51C]	Bind Head Tapping Screw-1 3.5x12 MFZN2Y (EP030240)	4	14
Woofer (L, R)	[53]	Truss Head Tapping Screw-1 4.0x20 MFZN2Y (20338800)	8	14
Power Transfomer	[103]	Bind Head Screw 4.0x14 MFZN2Y (EG340210)	4	14
Power Transfomer (U.S.A. model only)	[103]	Truss Head Screw 4.0x20 MFZN2Y (VL445800)	4	14

Table-2

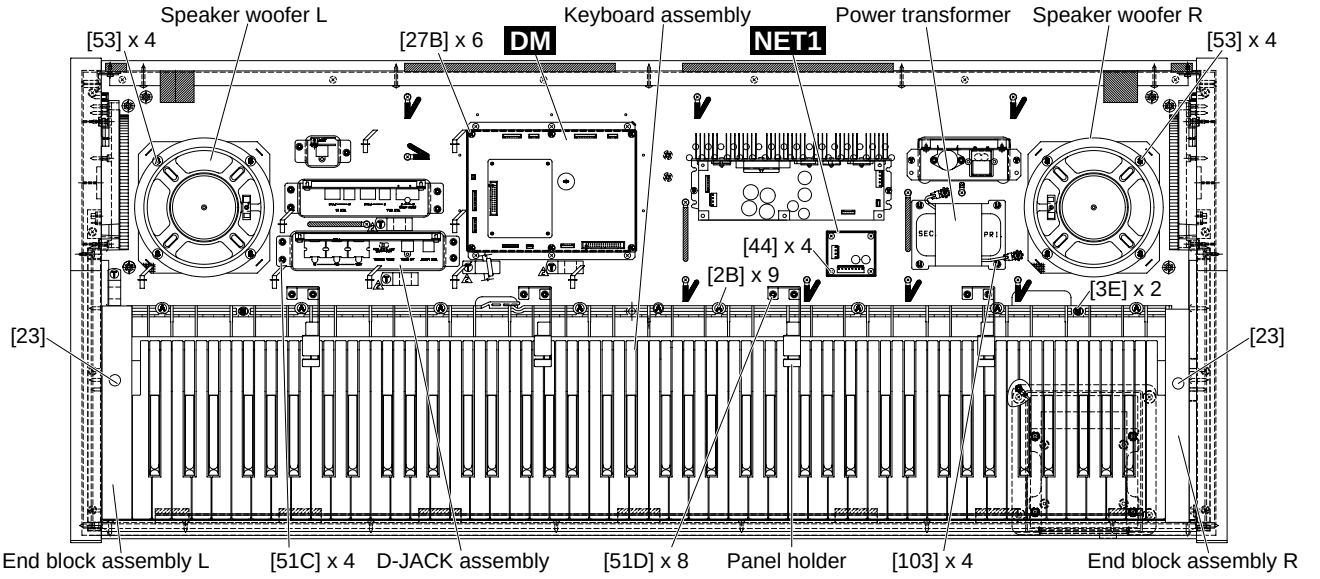

[2B]: Pan Head Screw PW 5.0x25 MFZN2Y (VV040700)
[3E]: Bind Head Tapping Screw-1 4.0x14 MFZN2Y (EP040230)
[23]: Truss Head Tapping Screw-1 3.5x30 MFZN2Y (VA076400)
[51]: Bind Head Tapping Screw-1 3.5x12 MFZN2Y (EP030240)

Fig. 14

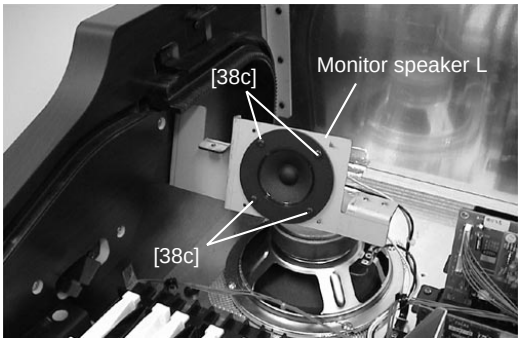

Fig. 15

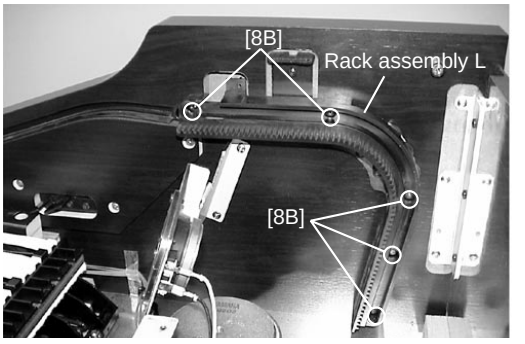

Fig. 16

13. D-JACK Circuit Board

(Time required: About 10 minutes)

13-1 Remove the D-JACK assembly. (See procedure 12.)

13-2 Remove the six (6) screws marked [3D]. The D-JACK circuit board can then be removed. (Fig. 17)

• D-JACK Assembly

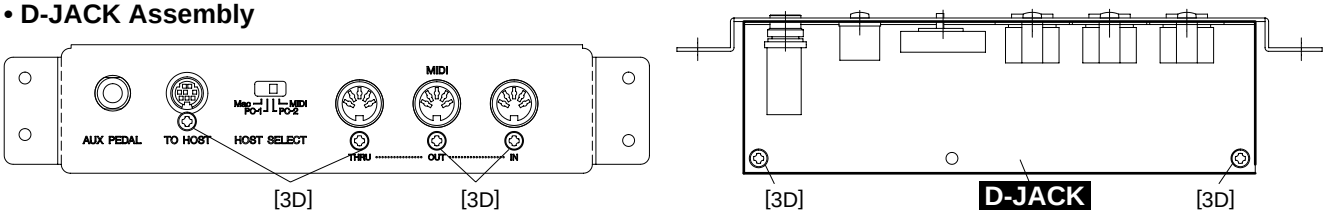

[3D]: Bind Head Tapping Screw-B 3.0x8 MFZN2BL (EP600190)

Fig. 17

14. Circuit Boards and Assemblies (Panel Assembly)

(Time required: About 5 minutes each)

Remove the following screws after removing the panel assembly. Each unit and assembly can then be removed. (Table-3)

Circuit Board and Unit	Ref. No.	Screw	QTY	Fig.
INV	[30]	Bind Head Tapping Screw-B 3.0x8 MFZN2Y (EP600250)	4	18
Power Switch Assembly	[58A]	Bind Head Tapping Screw-B 3.0x8 MFZN2BL (EP600190)	2	18
PNL	[58B]	Bind Head Tapping Screw-B 3.0x8 MFZN2BL (EP600190)	14	18
PNR	[58C]	Bind Head Tapping Screw-B 3.0x8 MFZN2BL (EP600190)	15	18
LCD Assembly	[58D]	Bind Head Tapping Screw-B 3.0x8 MFZN2BL (EP600190)	15	18
	[66]	Bind Head Tapping Screw-B 3.0x10 MFZN2BL (EP600140	1	18
MV	[58E]	Bind Head Tapping Screw-B 3.0x8 MFZN2BL (EP600190)	3	18
		Knob	1	18
ENC	[58]	Bind Head Tapping Screw-B 3.0x8 MFZN2BL (EP600190)	4	18
		Encoder Knob	1	18
Panel Sub Assembly (R)	[59A]	Bind Head Tapping Screw-1 3.5x10 MFZN2Y (EP030230)	3	18
	[59B]	Bind Head Tapping Screw-1 3.5x10 MFZN2Y (EP030230)	3	18
Panel Sub Assembly (L)	[59C]	Bind Head Tapping Screw-1 3.5x10 MFZN2Y (EP030230)	3	18
	[59D]	Bind Head Tapping Screw-1 3.5x10 MFZN2Y (EP030230)	3	18
GL Case Assembly	[59B]	Bind Head Tapping Screw-1 3.5x10 MFZN2Y (EP030230)	3	18
	[59D]	Bind Head Tapping Screw-1 3.5x10 MFZN2Y (EP030230)	3	18
	[60A]	Bind Head Tapping Screw-B 2.6x8 MFZN2BL (VB096700)	8	18
PNCR *1	[60B]	Bind Head Tapping Screw-B 2.6x8 MFZN2BL (VB096700)	2	18
PNCL *1	[60C]	Bind Head Tapping Screw-B 2.6x8 MFZN2BL (VB096700)	3	18
PNCB *2	[60D]	Bind Head Tapping Screw-B 2.6x8 MFZN2BL (VB096700)	4	18

Table-3

*1 Remove the LCD Assembly before removing the PNCL circuit board and the PNCR circuit board.

*2 Remove the GL case assembly before removing the PNCB circuit board.

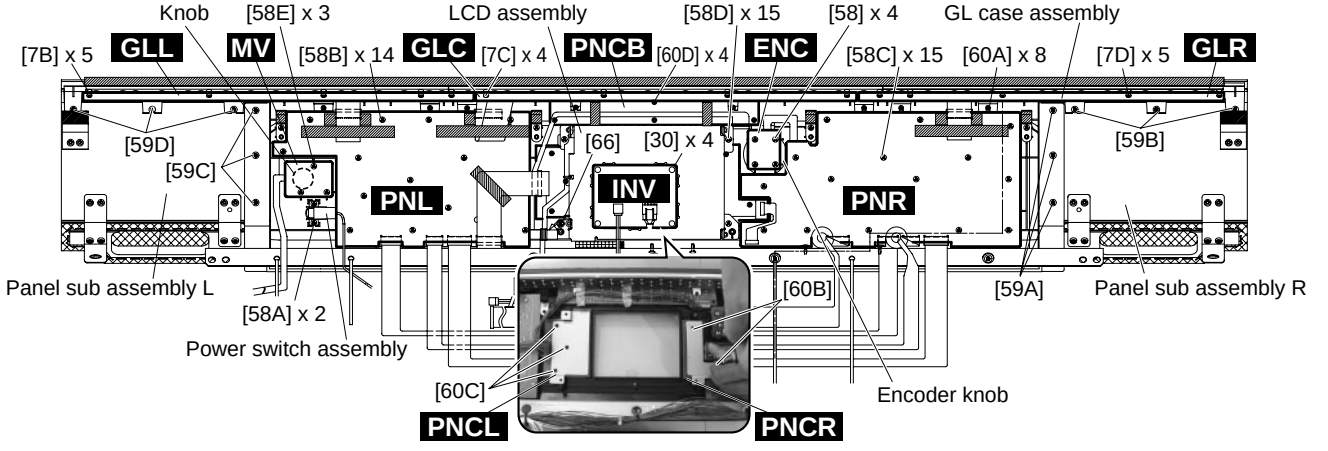

[7]: Bind Head Tapping Screw-B 2.6x8 MFZN2BL (VB096700)

Fig. 18

15. GLL Circuit Board, GLC Circuit Board, GLR Circuit Board

(Time required: About 25 minutes)

15-1 Remove the GL case assembly. (See procedure 14.)

15-2 Remove the five (5) screws marked [7B]. The GLL circuit board can then be removed. (Fig. 18)

15-3 Remove the four (4) screws marked [7C]. The GLC circuit board can then be removed. (Fig. 18)

15-4 Remove the five (5) screws marked [7D]. The GLR circuit board can then be removed. (Fig. 18)

16. Keyboard Assembly
(Time required: About 20 minutes)

16-1 Remove the top board assembly. (See procedure 4.)
16-2 Remove the key cover assembly. (See procedure 10.)
16-3 Remove the panel assembly. (See procedure 11.)
16-4 Remove the eight (8) screws marked [51D]. The four panel holders can then be removed. (Fig. 14)
16-5 Remove the screw marked [23]. The end block assembly can then be removed. (Fig. 14)
* The left and right end block assembly can then be removed in the same manner.
16-6 Remove the nine (9) screws marked [2B] and the two (2) screws marked [3E]. The keyboard assembly can then be removed. (Fig. 14)

17. Headphones Jack Assembly, HP Circuit Board (Time required: About 25 minutes)

17-1 Remove the top board assembly. (See procedure 4.)
17-2 Remove the key cover assembly. (See procedure 10.)
17-3 Remove the panel assembly. (See procedure 11.)
17-4 Remove the keyboard assembly. (See procedure 16.)
17-5 Remove the two (2) screws marked [51E]. The headphones jack assembly can then be removed. (Fig. 19)
17-6 Remove the two (2) hexagonal nuts marked [3F]. The HP circuit board can then be removed. (Fig. 1)

18. Main Unit (Time required: About 10 minutes)

18-1 Disconnect the AC cord and the PK-LF cable. (Fig. 7)
18-2 Remove the four (4) screws marked [A]. The main unit can then be removed by sliding backward and lifting up. (Fig. 20)

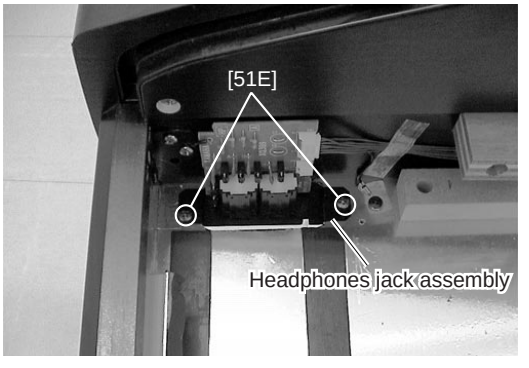

[51E]: Bind Head Tapping Screw-1 3.5x12 MFZN2Y (EP030240)

Fig. 19

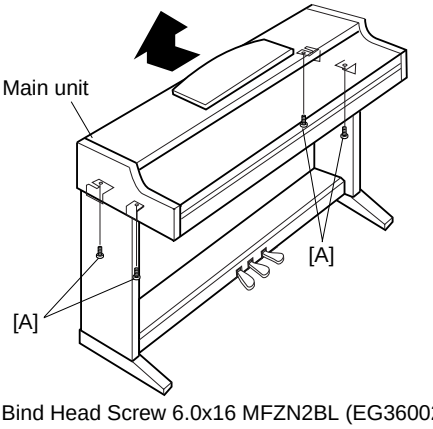

[A]: Bind Head Screw 6.0x16 MFZN2BL (EG360020)

Fig. 20

19. Arm Assembly (Time required: About 40 minutes)

19-1 Remove the top board assembly. (See procedure 4.)
19-2 Remove the key cover assembly. (See procedure 10.)
19-3 Remove the panel assembly. (See procedure 11.)
19-4 Remove the keyboard assembly. (See procedure 16.)
19-5 Remove the main unit. (See procedure 18.)

19-6 Remove the four (4) screws marked [15A] and the five (5) screws marked [18A]. The arm assembly can then be removed. (Fig. 1, Fig. 21)

* The left and right arm assembly each can then be removed in the same manner.

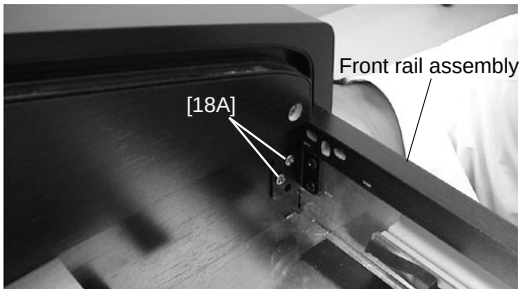

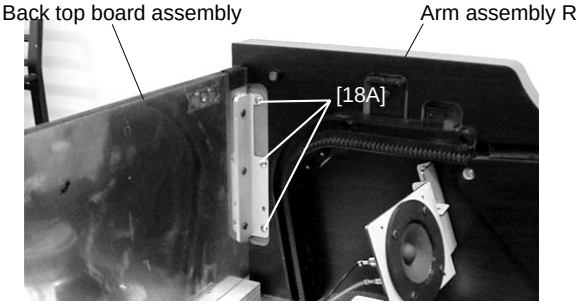

[18A]: Bind Head Tapping Screw-1 3.5x16 MFZN2Y (EP030190)

Fig. 21

20. Back Top Board Assembly

(Time required: About 45 minutes)

20-1 Remove the top board assembly. (See procedure 4.)

20-2 Remove the key cover assembly. (See procedure 10.)

20-3 Remove the panel assembly. (See procedure 11.)

20-4 Remove the keyboard assembly. (See procedure 16.)

20-5 Remove the main unit. (See procedure 18.)

20-6 Remove the arm assembly L (or R). (See procedure 19.)

20-7 Remove the six (6) screws marked [15B] and the three (3) screws marked [18B]. The back top board assembly can then be removed. (Fig. 1, Fig. 22)

21. Side Board Assembly

(Time required: About 20 minutes)

21-1 Remove the main unit. (See procedure 18.)

21-2 Remove the two (2) screws marked [BA] and the two (2) screws marked [CB]. The side board assembly can then be removed. (Fig. 23)

* The left and right side board assembly each can then be removed in the same manner.

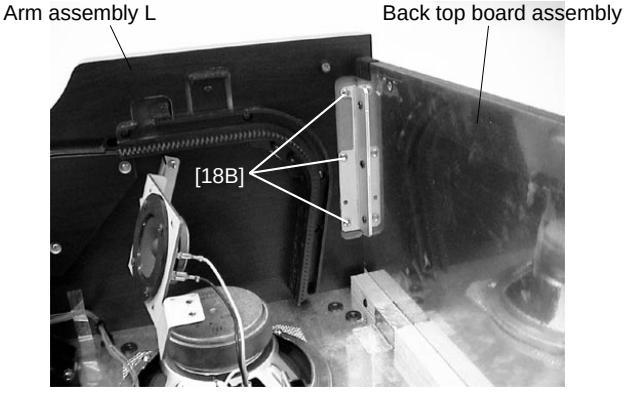

[18B]: Bind Head Tapping Screw-1 3.5x16 MFZN2Y (EP030190)

Fig. 22

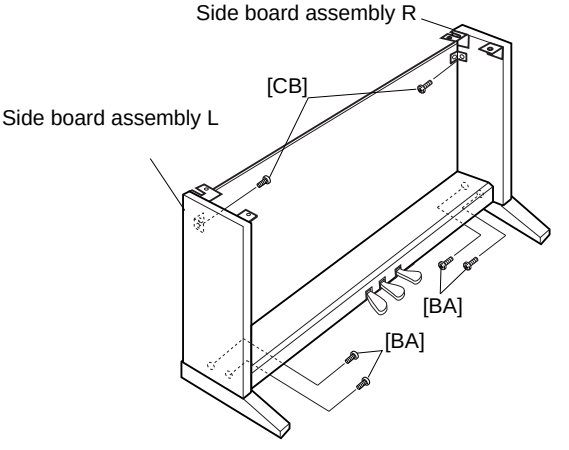

[BA]: Truss Head Screw 6.0x25 MFZN2BL (VQ448400)
[CB]: Truss Head Screw 4.0x12 MFZN2BL (VP367300)

Fig. 23

22. Stand Base Assembly

(Time required: About 10 minutes)

22-1 With a soft cloth like a blanket placed on the floor. Place the main unit gently so that the keyboard side is faced toward the top. (Fig. 24)

* For safety, this work should be done by two persons.

22-2 Put thick books or the like under the main unit at both sides. (Fig. 24)

22-3 Remove the three (3) screws marked [8C]. The stand base assembly can then be removed. (Fig. 24)

* The left and right stand base assembly each can then be removed in the same manner.

23. Pedal Box Assembly, Pedal Assembly

(Time required: About 15 minutes)

23-1 Remove the PK-LF cable. (Fig. 7)

23-2 With a soft cloth like a blanket placed on the floor. Place the main unit gently so that the keyboard side is faced toward the top. (Fig. 25)

* For safety, this work should be done by two persons.

23-3 Remove the four (4) screws marked [BB]. The pedal box assembly can then be removed. (Fig. 25)

23-4 Remove the eight (8) screws marked [6B] and the screw marked [7E]. The pedal assembly can then be removed. (Fig. 26)

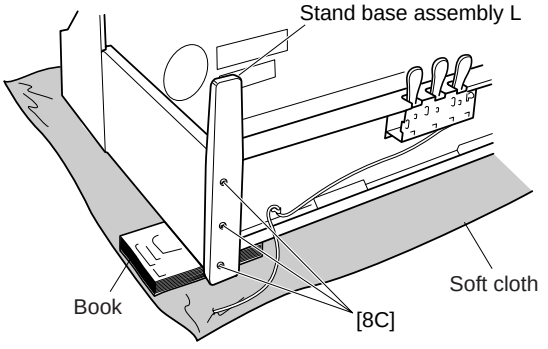

[8C]: Pan Head Tapping Screw-1 4.0x65 MFZN2Y (VV444000)

Fig. 24

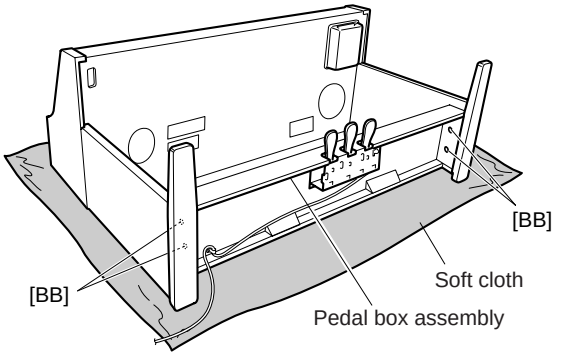

[BB]: Truss Head Screw 6.0x25 MFZN2BL (VQ448400)

Fig. 25

• Bottom view

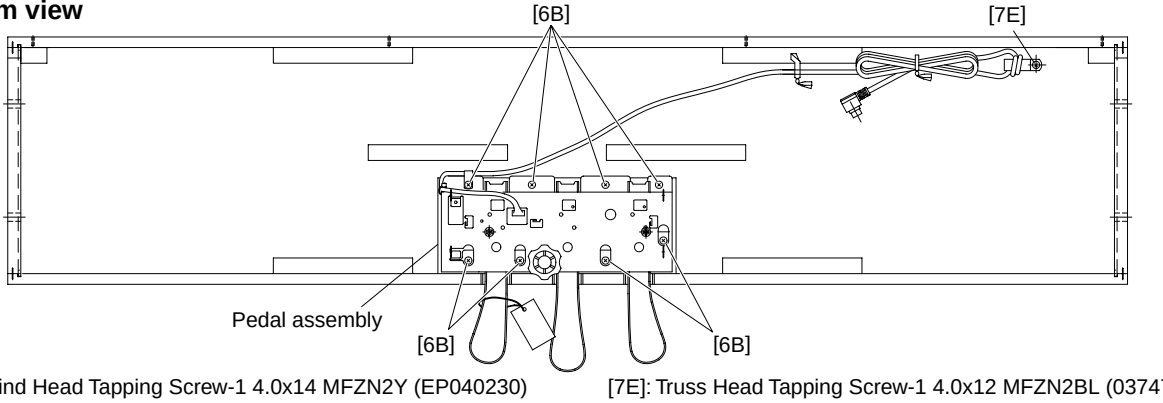

[6B]: Bind Head Tapping Screw-1 4.0x14 MFZN2Y (EP040230)

[7E]: Truss Head Tapping Screw-1 4.0x12 MFZN2BL (03747270)

Fig. 26

24. Disassembling the Keyboard

(Time required: About 15 minutes)

* After inserting a round stick (Rod: TX000670) between the frame and the keys, remove the circuit boards. (Fig. 27)

24-1 GH-DclSW L Circuit Board

Remove the seven (7) screws marked [260A]. The GH-DclSW L circuit board can then be removed. (Fig. 28)

24-2 GH-D SW H Circuit Board

Remove the ten (10) screws marked [260B]. The GH-D SW H circuit board can then be removed. (Fig. 28)

* Keys can be removed without removing the circuit boards.
* After removing the GH-DclSW L and GH-D SW H circuit boards, and the rubbers can then be removed.

24-3 White key

Insert a thin plate between the white keys, near the triangle mark around the fulcrum of the key, and press down the stopper marked [A] to remove the key. (Fig. 29, Fig. 30)

* Take care not to damage the key spring when removing a key.
* A black key can be removed after the white keys on either side have been removed.

24-4 Hammer, White Key

After a key has been removed, push a key spring down once to take it out of the hook. (Fig. 31)

Place the keyboard assembly upside-down and peel the stopper away. The hammer of the white key can then be removed. (Fig. 32)

* The hammer of the black key can then be removed in the same manner.

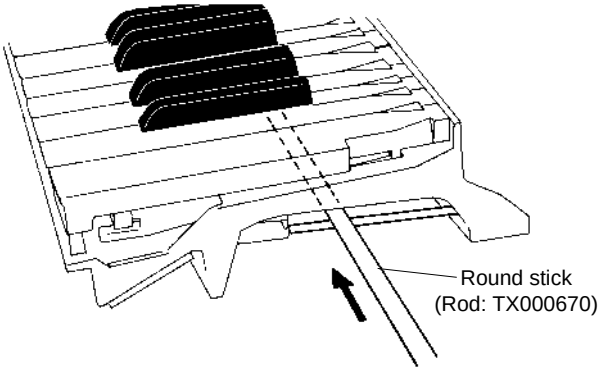

Fig. 27

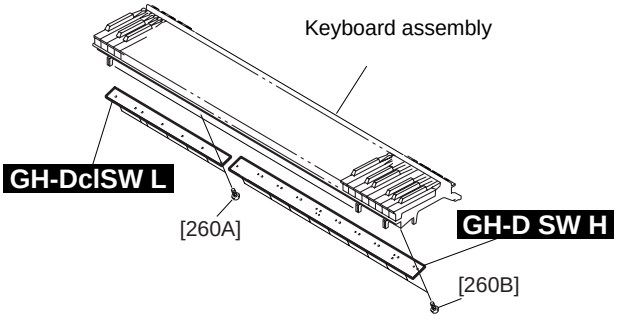

[260]: Bind Head Tapping Screw-P 3.0x10 MFZN2 (VT413400)

Fig. 28

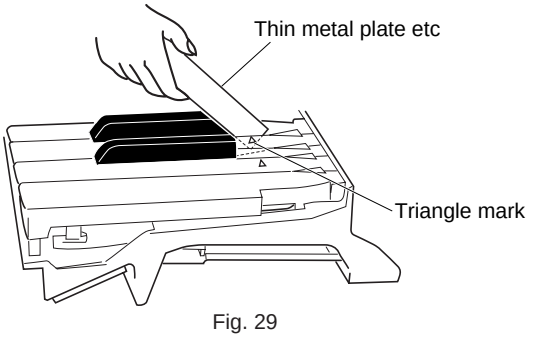

Fig. 29

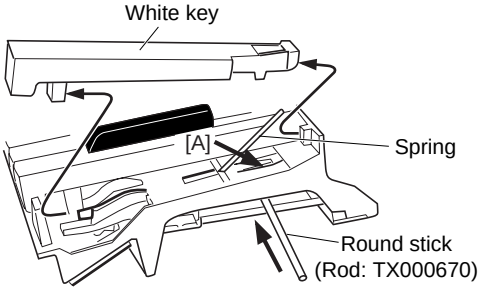

Fig. 30

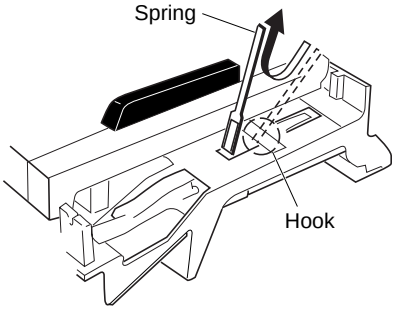

Fig. 31

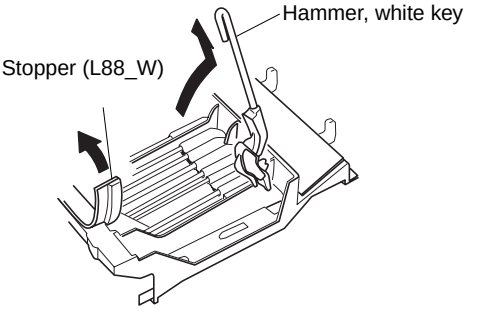

Fig. 32

25 Assembling the Keyboard

(Time required: About 15 minutes)

25-1 Hammer, White Key (Hammer, Black Key)

Place the keyboard assembly upside-down, insert a hammer assembly into the frame, and put the stopper (L88_W) on. (Fig. 33)

* There are four (4) kinds of hammers that differ in weight.

25-2 Spring

Place the GH-Dcl keyboard assembly rightside up. Fix key springs on the frame by setting one at each slit and pushing down once on each key spring. (Fig. 34)

* Be careful of the direction of the spring.

25-3 White Key (Black Key)

After a key has been fit to part [C] and key guide, make sure that the spring is fixed to the key and then press down part [B] of the key. (Fig. 35)

25-4 GH-DclSW L Circuit Board

Tighten the seven (7) screws marked [260A] to fix the GH-DclSW L circuit board. (Fig. 28)

25-5 GH-D SW H Circuit Board

Tighten the ten (10) screws marked [260B] to fix the GH-D SW H circuit board. (Fig. 28)

* Install the circuit boards in the keyboard assembly so that the hooks hold it as shown in figure 36.

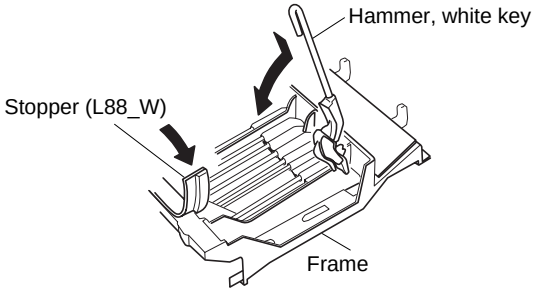

Fig. 33

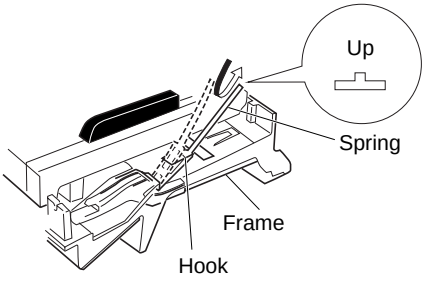

Fig. 34

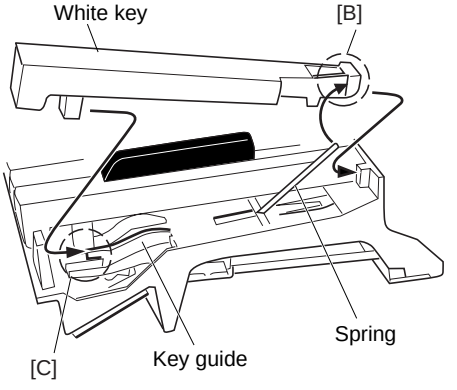

Fig. 35

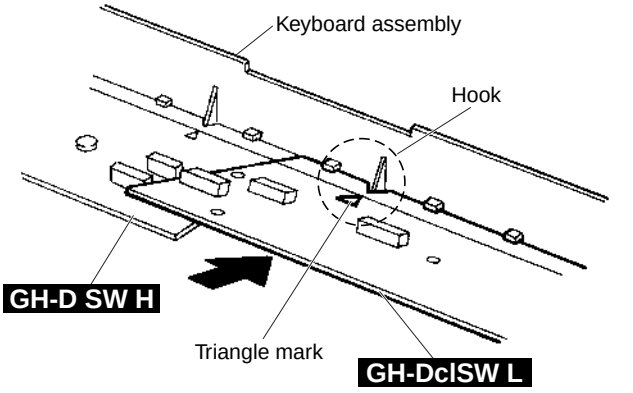

Fig. 36

■ LSI PIN DESCRIPTION

MN101C027YB (XS711200) **CPU** ····· 22
YMZ702-D (XR632A00) **KSN2** (Key Scanner) ····· 22
HD6417709F80B (XV250B00) **CPU** ····· 23
HG73C205AFD (XU947C00) **SWX00B** (Tone Generator) ····· 24
MBCG46183-129 (XV833A00) **SIO4** (Gate Array) ····· 25
HD63266F (XI939A00) **FDC** (Floppy Disk Controller) ····· 25
SED1335F0B (XQ595A00) **LCDC** (LCD Controller) ····· 26
AD1854JRSRL (XY782A00) **DAC** (Digital to Analog Converter) ····· 26

● **MN101C027YB** (XS711200) **CPU**

PNR: IC001

PIN NO.	NAME	I/O	FUNCTION	PIN NO.	NAME	I/O	FUNCTION
1	S1	I	Switch matrix data	33	S12	I	Switch matrix data
2	S2	I		34	S13	I	
3	S3	I		35	S14	I	
4	S4	I		36	TXD	O	MIDI transmit data
5	S5	I		37	S15	I	Switch matrix data
6	VREF+	-	Power supply (+5V, analog)	38	S16	I	
7	VDD	-	Power supply (+5V)	39	S17	I	
8	OSC2	O	Crystal oscillator (8MHz)	40	S18	I	
9	OSC1	I	Crystal oscillator (8MHz)	41	L16	O	LED drive data
10	VSS	-	Ground	42	L17	O	
11	XI	I	Not used	43	L18	O	
12	XO	O	Not used	44	L19	O	
13	MMOD	I	Memory mode select (Grounded)	45	L8	O	
14	RD0	O	Rotary encoder data	46	L9	O	
15	RXD	I	MIDI receive data	47	L10	O	
16	D0	O	LED and switch drive data	48	L11	O	
17	D1	O		49	L12	O	
18	D2	O		50	L13	O	
19	D3	O		51	L14	O	
20	D4	O		52	L15	O	
21	/RST	I	Reset	53	L7	O	LED and switch drive data
22	D5	O	LED and switch drive data	54	L6	O	
23	D6	O		55	L5	O	
24	D7	O		56	L4	O	
25	D8	O		57	L3	O	
26	D9	O		58	L2	O	
27	S6	I	Switch matrix data	59	L1	O	
28	S7	I		60	L0	O	
29	S8	I		61	VREF	-	Grounded
30	S9	I		62	AD0	I	Analog input
31	S10	I		63	AD1	I	Analog input
32	S11	I		64	S0	I	Switch matrix data

● **YMZ702-D** (XR632A00) **KSN2** (Key Scanner)

GH-DclSW L: IC KSN2

PIN NO.	NAME	I/O	FUNCTION	PIN NO.	NAME	I/O	FUNCTION
1	BK5	O	Key block (open drein)	21	GND		Ground
2	BK4	O		22	VDD		Power supply
3	BK3	O		23	SO	O	Serial data
4	BK2	O		24	ACK	I	Acknowledge/mode select
5	BK1	O		25	XCK	I	Clock for serial data
6	BK0	O		26	/IC	I	Initial clear
7	MK15	I	First make contact	27	TST1	I	Test mode
8	MK14	I		28	TST2	I	(L,L: normal mode, others: test)
9	MK13	I		29	XCKINH	I	Inhibit of serial clock
10	MK12	I		30	BK14	O	Key block (open drein)
11	MK11	I		31	BK13	O	
12	MK10	I		32	BK12	O	
13	MK05	I	Second make contact	33	BK11	O	
14	MK04	I		34	BK10	O	
15	MK03	I		35	BK9	O	
16	MK02	I		36	BK8	O	
17	MK01	I		37	BK7	O	
18	MK00	I		38	BK6	O	
19	XIN	I	Crystal osc. input (4 MHz)	39	GND		Ground
20	XOUT	O	Crystal osc. output (4 MHz)	40	VDD		Power supply

● HD6417709F80B (XV250B00) CPU

DM: IC018

PIN NO.	NAME	I/O	FUNCTION
1	MD1	I	Mode control
2	MD2	I	
3	Vcc(RTC)	-	Power supply +3.3V
4	XTAL2	O	Crystal oscillator
5	EXTAL2	I	
6	Vss(RTC)	-	Ground
7	NMI	I	Non-maskable interrupt request
8	IRQ0//IRL0/PTH0	I	Interrupt request / Port H
9	IRQ1//IRL1/PTH1	I	
10	IRQ2//IRL2/PTH2	I	
11	IRQ3//IRL3/PTH3	I	
12	IRQ4/PTH4	I	
13	D31/PTB7	I/O	Data bus / Port B
14	D30/PTB6	I/O	
15	D29/PTB5	I/O	
16	D28/PTB4	I/O	
17	D27/PTB3	I/O	
18	D26/PTB2	I/O	
19	Vss	-	Ground
20	D25/PTB1	I/O	Data bus / Port B
21	Vcc	-	Power supply +3.3V
22	D24/PTB0	I/O	Data bus / Port B
23	D23/PTA7	I/O	Data bus / Port A
24	D22/PTA6	I/O	
25	D21/PTA5	I/O	
26	D20/PTA4	I/O	
27	Vss	-	Ground
28	D19/PTA3	I/O	Data bus / Port A
29	Vcc	-	Power supply +3.3V
30	D18/PTA2	I/O	Data bus / Port A
31	D17/PTA1	I/O	
32	D16/PTA0	I/O	
33	Vss	-	Ground
34	D15	I/O	Data bus
35	Vcc	-	Power supply +3.3V
36	D14	I/O	Data bus
37	D13	I/O	
38	D12	I/O	
39	D11	I/O	
40	D10	I/O	
41	D9	I/O	
42	D8	I/O	
43	D7	I/O	
44	D6	I/O	
45	Vss	-	Ground
46	D5	I/O	Data bus
47	Vcc	-	Power supply +3.3V
48	D4	I/O	Data bus
49	D3	I/O	
50	D2	I/O	
51	D1	I/O	
52	D0	I/O	
53	A0	O	Address bus
54	A1	O	
55	A2	O	
56	A3	O	
57	Vss	-	Ground
58	A4	O	Address bus
59	Vcc	-	Power supply +3.3V
60	A5	O	Address bus
61	A6	O	
62	A7	O	
63	A8	O	
64	A9	O	
65	A10	O	
66	A11	O	
67	A12	O	
68	A13	O	
69	Vss	-	Ground
70	A14	O	Address bus
71	Vcc	-	Power supply +3.3V
72	A15	O	Address bus
73	A16	O	
74	A17	O	
75	A18	O	
76	A19	O	
77	A20	O	
78	A21	O	
79	Vss	-	Ground
80	A22	O	Address bus
81	Vcc	-	Power supply +3.3V
82	A23	O	Address bus
83	Vss	-	Ground
84	A24	O	Address bus
85	Vcc	-	Power supply +3.3V
86	A25	O	Address bus
87	/BS/PTK4	I/O	Bus cycle / Port K
88	/RD	O	Read strobe
89	/WE0/DQMLL	O	
90	/WE1/DQMLU//WE	O	
91	/WE2/DQMUL//ICRD/PTK6	I/O	
92	/WE3/DQMUU/ICIWR/PTK7	I/O	
93	RD//WR	O	Read / Write
94	PTE7	I/O	Port E
95	Vss	-	Ground
96	/CS0	O	Chip select
97	Vcc	-	Power supply +3.3V
98	/CS2/PTK0	I/O	Chip select / Port K
99	/CS3/PTK1	I/O	
100	/CS4/PTK2	I/O	
101	/CS5//CE1A/PTK3	I/O	Chip select / Chip enable / Port K
102	/CS6//CE1B	O	Chip select / Chip enable
103	/CE2A/PTE4	I/O	Chip enable / Port E
104	/CE2B/PTE5	I/O	

PIN NO.	NAME	I/O	FUNCTION
105	CKE/PTK5	I/O	CK enable / Port K
106	/RAS3L/PTJ0	I/O	3L Row address strobe / Port J
107	/RAS2L/PTJ1	I/O	2L Row address strobe / Port J
108	/CASLL//CAS/PTJ2	I/O	LL Column address strobe / Column address strobe / Port J
109	Vss	-	Ground
110	/CASLH/PTJ3	I/O	LH Column address strobe / Port J
111	Vcc	-	Power supply +3.3V
112	/CASHL/PTJ4	I/O	HL Column address strobe / Port J
113	/CASHH/PTJ5	I/O	HH Column address strobe / Port J
114	DACK0/PTD5	I/O	DMA acknowledge / Port D
115	DACK1/PTD7	I/O	
116	CAS2L/PTE6	I/O	2L Column address strobe / Port E
117	CAS2H/PTE3	I/O	2H Column address strobe / Port E
118	/RAS3U/PTE2	I/O	3U Row address strobe / Port E
119	/RAS2U/PTE1	I/O	2U Row address strobe / Port E
120	PTE0	I/O	Port E
121	/BACK	O	Bus acknowledge
122	/BREQ	I	Bus request
123	/WAIT	I	Hardware wait request
124	/RESETM	I	Manual reset
125	PTH5//ADTRG	I	Port H / Analog trigger
126	IOIS16/PTG7	I	Write protect / Port G
127	PTG6	I	Port G
128	PTG5	I	
129	PTG4	I	
130	PTG3	I	
131	PTG2	I	
132	VSS	-	Ground
133	PTG1	I	Port G
134	Vcc	-	Power supply +3.3V
135	PTG0	I	Port G
136	PTF7/PINT15	I	Port F / Port interruption
137	PTF6/PINT14	I	
138	PTF5/PINT13	I	
139	PTF4/PINT12	I	
140	PTF3/PINT11	I	
141	PTF2/PINT10	I	
142	PTF1/PINT9	I	
143	PTF0/PINT8	I	
144	MD0	I	Mode control
145	Vcc(PLL1)	-	Power supply +3.3V
146	CAP1	-	Capacitor
147	Vss(PLL1)	-	Ground
148	Vss(PLL2)	-	Ground
149	CAP2	-	Capacitor
150	VCC(PLL2)	-	Power supply +3.3V
151	PTH6	I	Port H
152	Vss	-	Ground
153	Vss	-	
154	Vcc	-	Power supply +3.3V
155	XTAL1	O	Crystal oscillator
156	EXTAL1	I	
157	STATUS0/PTJ6	I/O	Processor status / Port J
158	STATUS1/PTJ7	I/O	
159	TCLK/PTH7	I/O	Timer clock / Port H
160	/IRQOUT	O	Interrupt request output
161	Vss	-	Ground
162	CKIO	I/O	System clock input / output
163	Vcc	-	Power supply +3.3V
164	TXD0/SCPT0	O	Data transmission / SCI port
165	SCK0/SCPT1	I/O	Serial clock / SCI port
166	TXD1/SCPT2	O	Data transmission / SCI port
167	SCK1/SCPT3	I/O	Serial clock / SCI port
168	TXD2/SCPT4	O	Data transmission / SCI port
169	SCK2/SCPT5	I/O	Serial clock / SCI port
170	RTS2/SCPT6	I/O	Transmit request / SCI port
171	RXD0/SCPT0	I	Data reception / SCI port
172	RXD1/SCPT2	I	
173	Vss	-	Ground
174	RXD2/SCPT4	I	Data reception / SCI port
175	Vcc	-	Power supply +3.3V
176	CTS2//IRQ5/SCPT7	I	Transmit request / Interrupt request / SCI port
177	PTC7/PINT7	I/O	Port C / Port interruption
178	PTC6/PINT6	I/O	
179	PTC5/PINT5	I/O	
180	PTC4/PINT4	I/O	
181	Vss	-	Ground
182	/WAKEUP/PTD3	I/O	Standby mode Interrupt request output / port D
183	Vcc	-	Power supply +3.3V
184	PTD2//RESETOUT	I/O	Port D / Reset output
185	PTC3/PINT3	I/O	Port C / Port interruption
186	PTC2/PINT2	I/O	
187	PTC1/PINT1	I/O	
188	PTC0/PINT0	I/O	
189	DRAK0/PTD1	I/O	DMA acknowledge / Port D
190	DRAK1/PTD0	I/O	
191	/DREQ0/PTD4	I	DMA request / Port D
192	/DREQ1/PTD6	I	
193	/RESETP	I	Power on reset
194	/CA	I	Chip active
195	MD3	I	Mode control
196	MD4	I	
197	MD5	I	
198	AVss	-	Analog ground
199	AN0/PTL0	I	Analog input / Port L
200	AN1/PTL1	I	
201	AN2/PTL2	I	
202	AN3/PTL3	I	
203	AN4/PTL4	I	
204	AN5/PTL5	I	
205	AVcc	-	Analog power supply +3.3V
206	AN6/DA1/PTL6	I/O	Analog input / Analog output / Port L
207	AN7/DA0/PTL7	I/O	
208	AVss	-	Analog ground

● **HG73C205AFD** (XU947C00) **SWX00B** (Tone Generator)

DM: IC036
SWX: IC001

PIN NO.	NAME	I/O	FUNCTION	PIN NO.	NAME	I/O	FUNCTION
1	ICN	I	Initial clear	85	CMA3	O	Program address bus
2	RFCLKI	I	PLL Clock	86	CMA8	O	Program address bus
3	TM2	I	PLL Control	87	CMA2	O	Program address bus
4	AVDD_PLL		Power supply	88	CRD	O	read signal
5	AVSS_PLL		Ground	89	CMA1	O	Program address bus
6	MODE0	I	SWX dual mode	90	CUB	O	high byte effective signal
7	VCC7		Power supply	91	VCC91		Power supply
8	GND8		Ground	92	GHND92		Ground
9	XIN	I	crystal oscillator	93	CS1	O	CS signal
10	XOUT	O	crystal oscillator	94	CMA0	O	Program address bus
11	MODE1	I	SWX separate mode	95	CLB	O	low byte effective signal
12	TEST0	I	TEST pin	96	CMA12	O	Program address bus
13	TESTON	I	TEST pin	97	CMA11	O	Program address bus
14	AN0-P40	I	A/D converter	98	CMA10	O	Program address bus
15	AN1-P41	I	A/D converter	99	CMA9	O	Program address bus
16	AN2-P42	I	A/D converter	100	GND100		Ground
17	AN3-P43	I	A/D converter	101	CWE	O	write signal
18	AVDD_AN		Power supply	102	CMA16	O	Program address bus
19	AVSS_AN		Ground	103	CMA15	O	Program address bus
20	TXD0	O	for MIDI or TO-HOST	104	CMA14	O	Program address bus
21	TXD1	O	for MIDI	105	CMA13	O	Program address bus
22	EXCLK	I	Crystal oscillator	106	CMD8	I/O	Program memory Data bus
23	SMD11	I/O	Wave memory data bus	107	CMD7	I/O	Program memory Data bus
24	SMD4	I/O	Wave memory data bus	108	CMD9	I/O	Program memory Data bus
25	SMD3	I/O	Wave memory data bus	109	CMD6	I/O	Program memory Data bus
26	SMD12	I/O	Wave memory data bus	110	CMD10	I/O	Program memory Data bus
27	SMD10	I/O	Wave memory data bus	111	CMD5	I/O	Program memory Data bus
28	SMD5	I/O	Wave memory data bus	112	CMD11	I/O	Program memory Data bus
29	SMD2	I/O	Wave memory data bus	113	CMD4	I/O	Program memory Data bus
30	SMD13	I/O	Wave memory data bus	114	CMD12	I/O	Program memory Data bus
31	SMD9	I/O	Wave memory data bus	115	CMD3	I/O	Program memory Data bus
32	SMD6	I/O	Wave memory data bus	116	CMD13	I/O	Program memory Data bus
33	SMD1	I/O	Wave memory data bus	117	CMD2	I/O	Program memory Data bus
34	SMD14	I/O	Wave memory data bus	118	CMD14	I/O	Program memory Data bus
35	VCC35		Power supply	119	VCC119		Power supply
36	GND36		Ground	120	GND115		Ground
37	SMD8	I/O	Wave memory data bus	121	CMD1	I/O	Program memory Data bus
38	SMD7	I/O	Wave memory data bus	122	CMD15	I/O	Program memory Data bus
39	SMD0	I/O	Wave memory data bus	123	CMD0	I/O	Program memory Data bus
40	SMD15	I/O	Wave memory data bus	124	CMA21	O	Program address bus
41	SOE	O	read signal	125	PDT15	I/O	SWX access data bus
42	SWE	O	write signal	126	PDT14	I/O	SWX access data bus
43	SRAS	O	RAS signal	127	PDT13	I/O	SWX access data bus
44	SCAS	O	CAS signal	128	PDT12	I/O	SWX access data bus
45	REFRESH	O	REFRESH signal	129	PDT11	I/O	SWX access data bus
46	CS0	O	CS signal	130	PDT10	I/O	SWX access data bus
47	SMA0	O	Memory address bus	131	PDT9	I/O	SWX access data bus
48	SMA16	O	Memory address bus	132	PDT8	I/O	SWX access data bus
49	VCC49		Power supply	133	VCC133		Power supply
50	GND50		Ground	134	GND134		Ground
51	SMA1	O	Memory address bus	135	PDT7	I/O	SWX access data bus
52	SMA15	O	Memory address bus	136	PDT6	I/O	SWX access data bus
53	SMA2	O	Memory address bus	137	PDT5	I/O	SWX access data bus
54	SMA14	O	Memory address bus	138	PDT4	I/O	SWX access data bus
55	SMA3	O	Memory address bus	139	PDT3	I/O	SWX access data bus
56	SMA13	O	Memory address bus	140	PDT2	I/O	SWX access data bus
57	SMA4	O	Memory address bus	141	PDT1	I/O	SWX access data bus
58	SMA12	O	Memory address bus	142	PDT0	I/O	SWX access data bus
59	SMA5	O	Memory address bus	143	VCA143		Power supply
60	GND60		Ground	144	GND144		Ground
61	VCC61		Power supply	145	PAD2	I	SWX access address bus
62	SMA11	O	Memory address bus	146	PAD1	I	SWX access address bus
63	SMA6	O	Memory address bus	147	PAD0	I	SWX access address bus
64	SMA10	O	Memory address bus	148	VCC148		Power supply
65	SMA7	O	Memory address bus	149	GND149		Ground
66	SMA9	O	Memory address bus	150	PCS	I	Chip select
67	SMA17	O	Memory address bus	151	PWR	I	write enable
68	SMA8	O	Memory address bus	152	PRD	I	read enable
69	SMA18	O	Memory address bus	153	RXD0	I	for Midi or TO-HOST
70	SMA19	O	Memory address bus	154	RXD1	I	for Midi or Key scan
71	SMA20	O	Memory address bus	155	SCLKI	I	EXT Clock
72	SMA21	O	Memory address bus	156	ADIN	I	A/D converter
73	SMA22	O	Memory address bus	157	ADLR	O	A/D converter LR clock
74	SMA23	O	Memory address bus	158	DO0	O	DAC
75	CMA20	O	Program address bus	159	DO1	O	DAC
76	CMA19	O	Program address bus	160	SYSCLK	O	1/2 clock
77	VCC77		Power supply	161	VCC161		Power supply
78	GND78	O	Ground	162	GND162		Ground
79	CMA18	O	Program address bus	163	WCLK	O	for DAC LR clock
80	CMA17	O	Program address bus	164	QCLK	O	1/12 clock
81	CMA5	O	Program address bus	165	BCLK	O	IIS-DAC clock
82	CMA6	O	Program address bus	166	SYI	I	Synch signal
83	CMA4	O	Program address bus	167	IRQ0	I	Interrupt request
84	CMA7	O	Program address bus	168	NMI	I	Interrupt request

● **MBCG46183-129** (XV833A00) **SIO4** (Gate Array)

DM: IC026

PIN NO.	NAME	I/O	FUNCTION	PIN NO.	NAME	I/O	FUNCTION
1	D5	I/O	Data Bus	25	TX31	O	Transmit Data 31
2	D6	I/O		26	RX32	I	Receive Data 32
3	D7	I/O		27	TX32	O	Transmit Data 32
4	/IRQ0	I/O	Interrupt Request Port 0	28	RX33	I	Receive Data 33
5	/IRQ1	I/O	Interrupt Request Port 1	29	TX33	I/O	Transmit Data 33
6	Vss		Ground	30	/IC	I	Initial Clear
7	/IRQ2	I/O	Interrupt Request Port 2	31	Vss		Ground
8	IRQ3	I/O	Interrupt Request Port 3	32	XI	I	Quartz Crystal Input
9	/RD	I	Read Signal Input	33	Vss		Ground
10	/WR	I	Write Signal Input	34	XO	I/O	Quartz Crystal Onput
11	/CE	I	Chip Enable Input	35	A0	I	Address Bus
12	/ASTB	I	Address Strobe (Not used: to ground)	36	A1	I	
13	TESTSIO	I	Input with Pull-down Resistor (50 k)	37	A2	I	
14	RX0	I	Receive Data 0	38	A3	I	
15	TX0	O	Transmit Data 0	39	A4	I	
16	RX1	I	Receive Data 1	40	A5	I	
17	TX1	O	Transmit Data 1	41	CPUCLK	I	CPU Clock
18	Vss		Ground	42	Vss		Ground
19	Vdd		Power Supply	43	Vdd		Power Supply
20	RX2	I	Receive Data 2	44	D0	I/O	Data Bus
21	TX2/BO2	O	Transmit Data 2	45	D1	I/O	
22	RX30	I	Receive Data 30	46	D2	I/O	
23	TX30	O	Transmit Data 30	47	D3	I/O	
24	TX31	I	Receive Data 31	48	D4	I/O	

● **HD63266F** (XI939A00) **FDC** (Floppy Disk Controller)

DM: IC009

PIN NO.	NAME	I/O	FUNCTION	PIN NO.	NAME	I/O	FUNCTION
1	8"//5"	I	Data transmission speed	33	/TRKO	I	Track 00 signal
2	XTALSET	I	Clock select	34	/INDEX	I	Index signal
3	/RESET	I	Rest	35	/RDATA	I	Read data input from FDD
4	E//RD	I	Enable/Read	36	XTAL2		Clock
5	RW//WR	I	Read/write/Write	37	EXTAL2		
6	/CS	I	Chip select	38	NC		
7	/DACK	I	DMA acknowledge	39	XTAL1		Clock
8	RS0	I	Register select	40	EXTAL1		
9	RS1	I		41	VSS4		Ground
10	VSS1		Ground	42	VSS5		
11	VSS2			43	NC		
12	D0	I/O	Data bus	44	VCC2		Power supply
13	D1	I/O		45	VCC3		
14	D2	I/O		46	VCC4		
15	D3	I/O		47	/WGATE	O	Write control
16	D4	I/O		48	/WDATA	O	Writ data to FDD
17	D5	I/O		49	VSS6		Ground
18	D6	I/O		50	/STEP	O	Step signal to control head of FDD
19	D7	I/O		51	/HDIR	O	Direction
20	/DREQ	O	DMA request	52	/HLOAD	O	Head load
21	/IRQ	O	Interrupt request	53	/HSEL	O	Head select
22	/DEND	I	Data end	54	VSS7		Ground
23	VSS3		Ground	55	/DS0	O	Drive select
24	1/2 EX1			56	/DS1	O	
25	VCC1		Power supply	57	/DS2	O	
26	NUM1	I		58	/DS3	O	
27	NUM3	I		59	VSS8		Ground
28	IFS	I	Host interface select	60	/MON0	O	Motor on
29	SFORM	I	Format data	61	/MON1	O	
30	/INP	I	Index pulse	62	/MON2	O	
31	/READY	I	Ready from FDD	63	/MON3	O	
32	/WPRT	I	Write control signal	64	VSS9		Ground

● **SED1335F0B** (XQ595A00) **LCDC** (LCD Controller)

DM: IC008

PIN NO.	NAME	I/O	FUNCTION	PIN NO.	NAME	I/O	FUNCTION
1	VA5	O	VRAM address bus	31	XD2	O	Data bus output for 4 bit dot
2	VA4	O		32	XD1	O	
3	VA3	O		33	XD0	O	
4	VA2	O		34	XECL	O	S driver enable, chain clock
5	VA1	O		35	XSCL	O	Data bus shift clock
6	VA0	O		36	Vss	-	Ground
7	/VWR	O	VRAM read/write	37	LP	O	X driver latch pulse
8	/VCE	O	Memory control	38	WF	O	Frame signal for X/Y driver
9	/VRD	-	Not used	39	YDIS	O	Power down signal for displaying off mode
10	/RES	I	Initial clear	40	YD	O	Scan start signal
11	NC	-	Not used	41	YSCL	O	Scan shift clock
12	NC	-	Not used	42	VD7	I/O	VRAM data bus
13	/RD	I	Read strobe	43	VD6	I/O	
14	/WR	I	Write strobe	44	VD5	I/O	
15	SEL2	I	Bus select	45	VD4	I/O	
16	SEL1	I	Bus select	46	VD3	I/O	
17	OSC1	I	Clock	47	VD2	I/O	
18	OSC2	O	Clock	48	VD1	I/O	
19	/CS	I	Chip select	49	VD0	I/O	
20	A0	I	Data mode select	50	VA15	O	VRAM address bus
21	Vdd	-	Power supply	51	VA14	O	
22	D0	I/O	Data bus	52	VA13	O	
23	D1	I/O		53	VA12	O	
24	D2	I/O		54	VA11	O	
25	D3	I/O		55	VA10	O	
26	D4	I/O		56	VA9	O	
27	D5	I/O		57	VA8	O	
28	D6	I/O		58	VA7	O	
29	D7	I/O		59	VA6	O	
30	XD3	O	Data bus output for 4 bit dot	60	NC	-	Not used

● **AD1854JRSRL** (XY782A00) **DAC** (Digital to Analog Converter)

DM: IC027

PIN NO.	NAME	I/O	FUNCTION	PIN NO.	NAME	I/O	FUNCTION
1	DGND	I	Digital Ground	15	AGND	I	Analog Ground
2	MCLK	I	Master Clock Input. Connect to an external clock source at either 256, 384 or 512 Fs.	16	OUTL-	O	Left Channel Negative line level analog output.
3	CLATCH	I	Latch input for control data. This input is rising-edge sensitive.	17	OUTL+	O	Left Channel Positive line level analog output.
4	CCLK	I	Control clock input for control data. Control input data must be valid on the rising edge of CCLK. CCLK may be continuous or gated.	18	AVDD	I	Analog Power Supply. Connect to analog 5 V supply.
				19	FILTB	O	Filter Capacitor connection, connect 10 µF capacitor to AGND.
5	CDATA	I	Serial control input, MSB first, containing 16 bits of unsigned data per channel. Used for specifying channel-specific attenuation and mute.	20	IDPM1	I	Input serial data port mode control one. With IDPM0, defines one of four serial modes.
6	384//256	I	Selects the master clock mode as either 384 times the intended sample frequency (HI) or 256 times the intended sample frequency (LO). The state of this input should be hardwired to logic HI or logic LO, or may be changed while the AD1854 is in power-down/reset. It must not be changed while the AD1854 is operational.	21	IDPM0	I	Input serial data port mode control zero. With IDPM1, defines one of four serial modes.
				22	ZEROL	O	Left Channel Zero Flag Output. This pin goes HI when Left Channel has no signal input for more than 1024 LR Clock Cycles.
7	X2MCLK	I	Selects internal clock doubler (LO) or internal clock = MCLK (HI).	23	MUTE	I	Mute. Assert HI to mute both stereo analog outputs. Deassert LO for normal operation.
8	ZEROR	O	Right Channel Zero Flag Output. This pin goes HI when Right Channel has no signal input for more than 1024 LR Clock Cycles.	24	/PD//RST	I	/Power-Down//Reset. The AD1854 is placed in a low power consumption mode when this pin is held LO. The AD1854 is reset on the rising edge of this signal. The serial control port registers are reset to the default values. Connect HI for normal operation.
9	DEEMP	I	De-Emphasis. Digital de-emphasis is enabled when this input signal is HI. This is used to impose a 50 µs/15 µs response characteristic on the output audio spectrum at an assumed 44.1 kHz sample rate.	25	L//RCLK	I	Left//Right clock input for input data. Must run continuously.
10	96//48	I	Selects 48 kHz (LO) or 96 kHz Sample Frequency Control.	26	BCLK	I	Bit clock input for input data. Need not run continuously; may be gated or used in a burst fashion.
11	AGND	I	Analog Ground				
12	OUTR+	O	Right Channel Positive line level analog output.				
13	OUTR-	O	Right Channel Negative line level analog output.	27	SDATA	I	Serial input, MSB first, containing two channels of 16, 18, 20, and 24 bits of twos complement data per channel.
14	FILTR	O	Voltage Reference Filter Capacitor Connection. Bypass and decouple the voltage reference with parallel 10 µF and 0.1 µF capacitors to the AGND.	28	DVDD	I	Digital Power Supply Connect to digital 5 V supply.

■ IC BLOCK DIAGRAM

● **HD74LV08AFPEL** (IS000800)
Quad 2 Input AND
DM: IC002

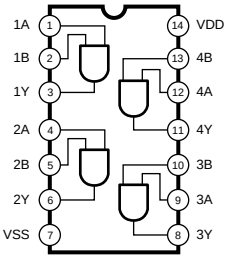

● **HD74LV21ATELL** (X0010A00)
Dual 4 Input AND
DM: IC013

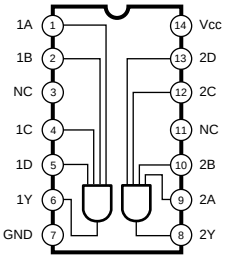

● **SN74HC132NSR** (XW792A00)
MM74HC132SJX (XY352A00)
Quad 2 Input NAND
DM: IC028,045

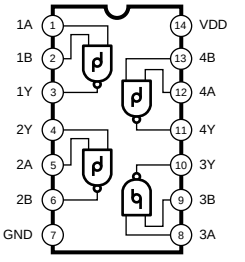

● **HD74LVC139FPEL** (XS048A00)
Dual 2 to 4 Demultiplexer
DM: IC021

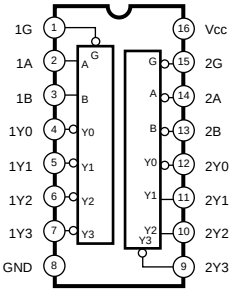

● **TC74VHCT245AFT** (XT744A00)
74LVC245APW (XZ286A00)
Octal 3-State Bus Transceiver
DM: IC001, 015, 017, 020
IC011, 012, 016

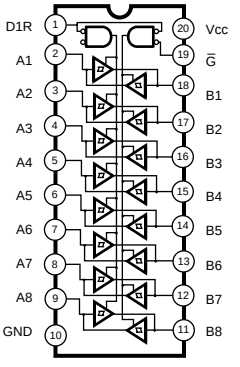

● **HD74LV374AFPEL** (IS037400)
SN74LV374ANSR (IS037410)
Octal 3-State D-Type Flip-Flop
DM: IC043

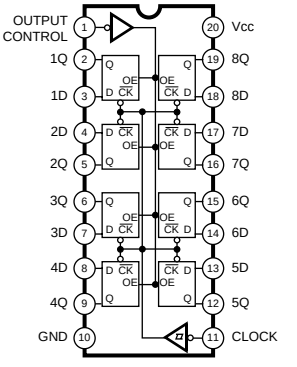

● **SN74AHCT1G08DCKR** (X0158A00)
Single 2-Input Positive-AND Gate
DM: IC004, 039

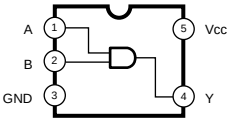

FUNCTION TABLE

INPUTS		OUTPUT
A	B	Y
H	H	H
L	X	L
X	L	L

● **SN75C1168NSR** (XU073A00)
Line Driver/Receiver
D-JACK: IC002

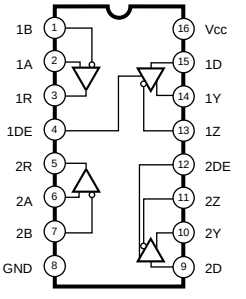

● **M5229FP** (XY487A00)
7 Band Graphic Equalizer
A-JACK: IC300, 400

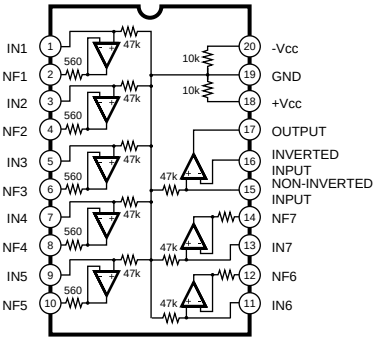

● **TC4069UBF-EL** (XE054A00)
Hex Inverter
DM: IC007

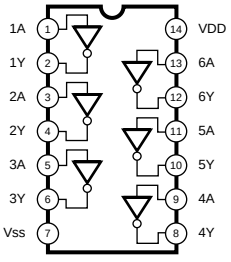

● **SC7SU04FEL** (XI348A00)
Inverter Gate
D-JACK: IC001

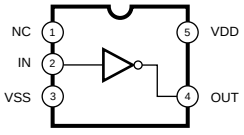

● **M5233FP-600D** (X0506A00)
Comparator
DM: IC044

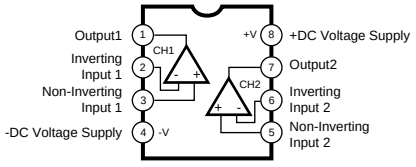

● **µPC4570G2** (XF291A00)
Dual Operational Amplifier
DM: IC031
A-JACK: IC100

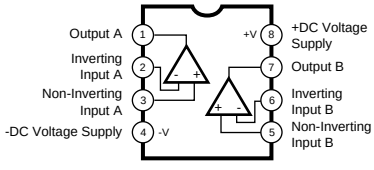

● **LA6517M-TE-R** (XT131A00)
Dual Low Voltage Power Amplifier
A-JACK: IC200

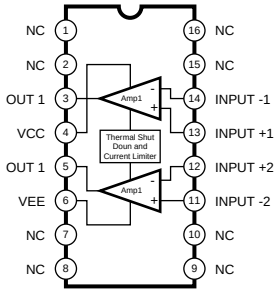

■ CIRCUIT BOARDS CONTENTS

A-JACK (XZ888B0) ····· 39
D-JACK (XW982D0) ····· 40
DM (XZ905D0) ····· 29/30
ENC (XZ882C0) ····· 31/34
FU60 (XQ395A0) ····· 37
GLC (XZ883B0) ····· 41
GLL (XZ883B0) ····· 42
GLR (XZ883B0) ····· 43
HP (XQ390A0) ····· 40
INV (XZ881C0) ····· 31
MA60 (XQ393E0) ····· 45
MV (XZ881C0) ····· 44
NET1 (XT123B0) ····· 45
PEDAL (D-JACK 2/2) (XW982D0) ····· 40
PEDAL (SW) (XR780B0) ····· 44
PEDAL VR (XR780B0) ····· 44
PNCB (XZ881C0) ····· 35
PNCL (X0080C0) ····· 37
PNCR (X0080C0) ····· 38
PNL (XZ881C0) ····· 35
PNR (XZ882C0) ····· 31/33
SWX (XZ896B0) ····· 38

Note: See parts list for details of circuit board component parts.

■ CIRCUIT BOARDS

● DM Circuit Board

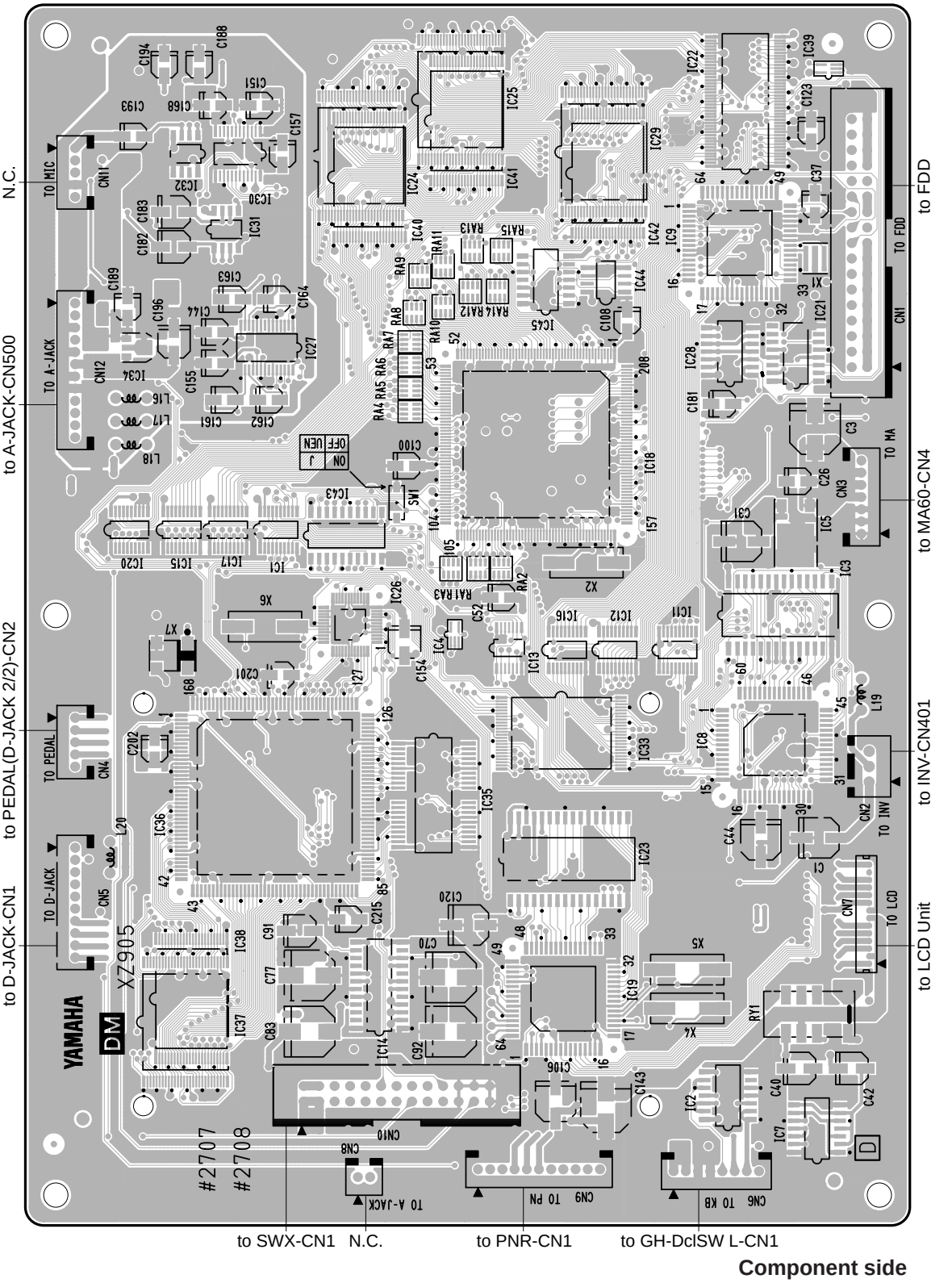

Component side

2NA-V716590-1⚠

● DM Circuit Board

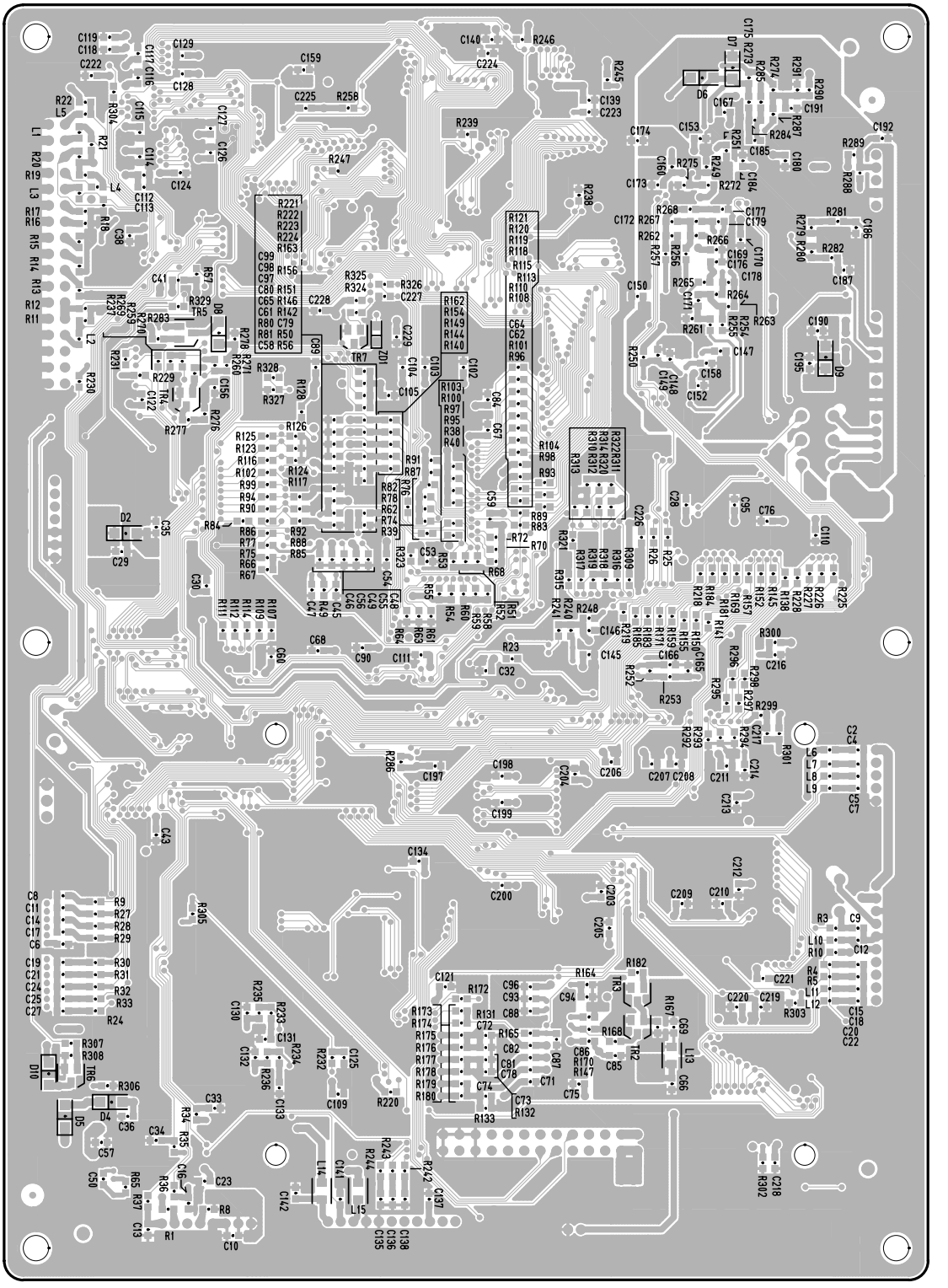

Pattern side

● PNR Circuit Board

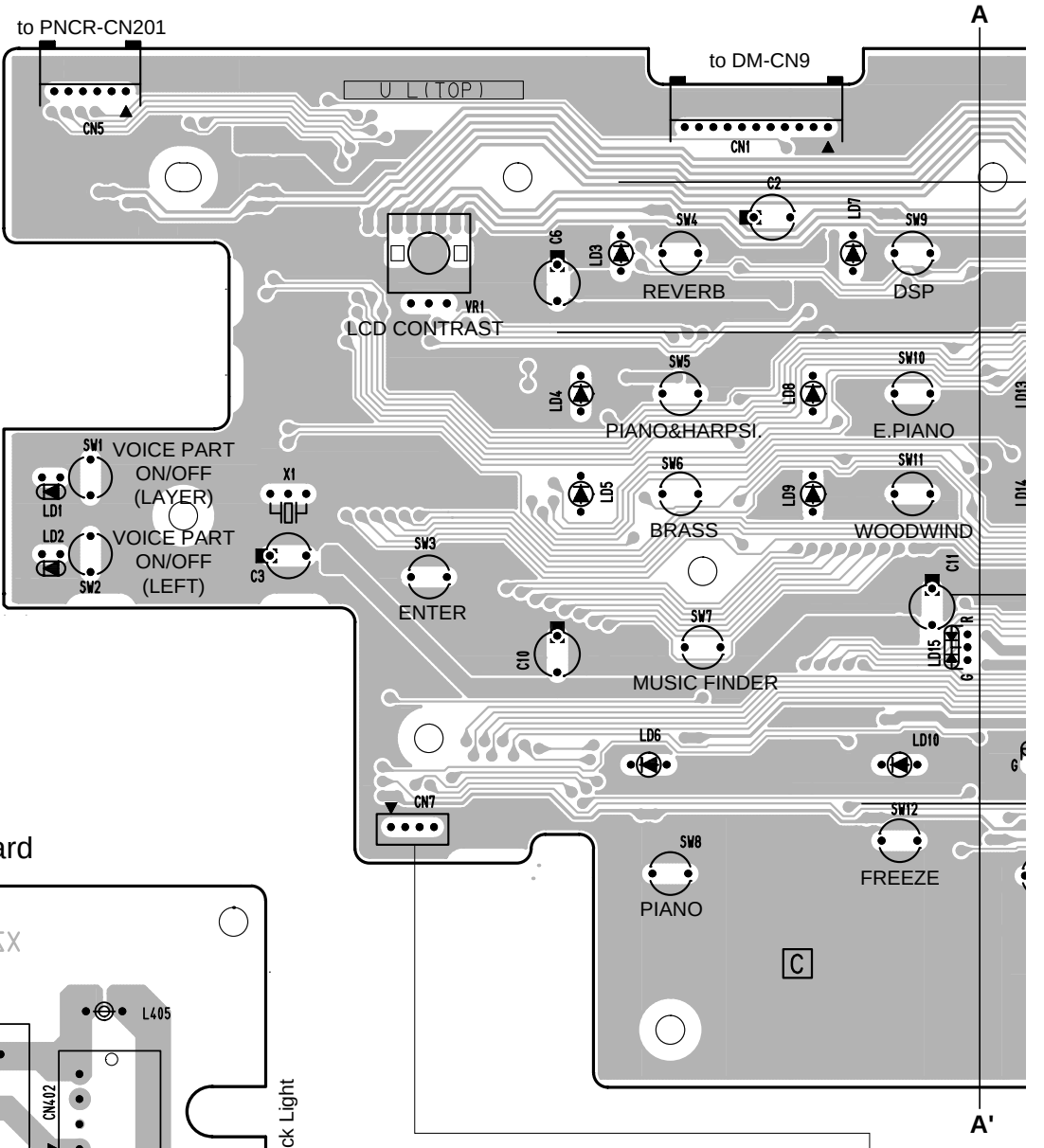

● INV Circuit Board

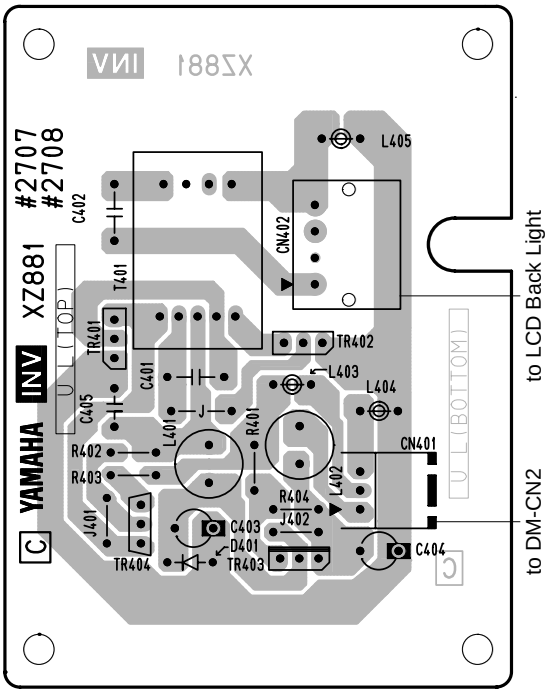

Component side

● ENC Circuit Board

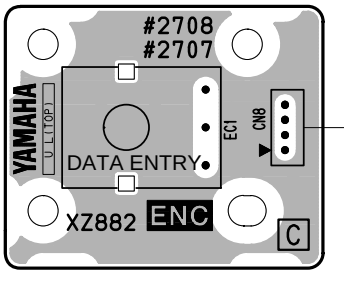

Component side

PNR, ENC: 2NA-V713520-1 ⚠3
INV: 2NA-V713450 ⚠3

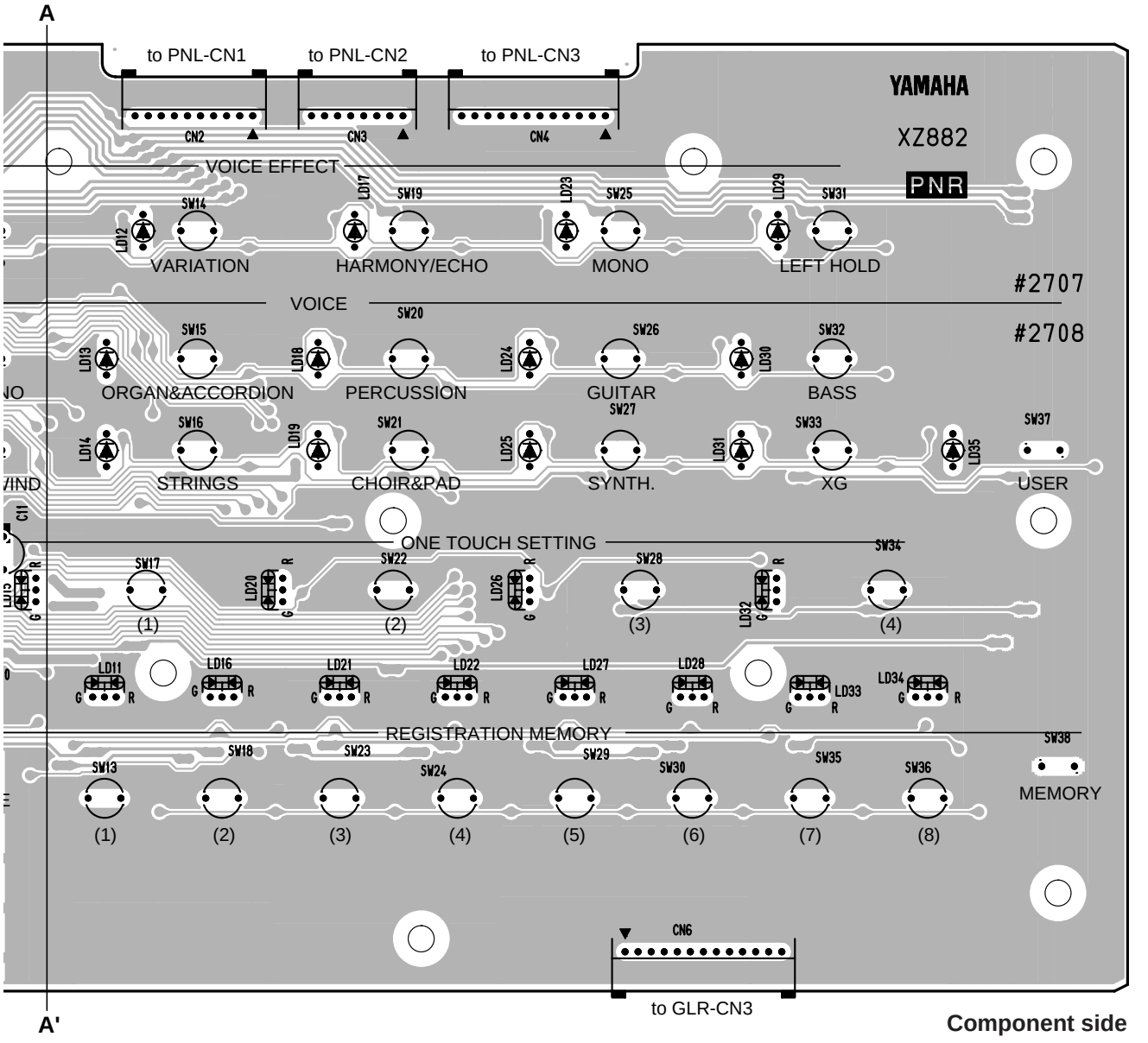
A
A'
to PNL-CN1
to PNL-CN2
to PNL-CN3
CN2
CN3
CN4
YAMAHA
XZ882
PNR
#2707
#2708
VOICE EFFECT
VARIATION
HARMONY/ECHO
MONO
LEFT HOLD
VOICE
ORGAN&ACCORDION
PERCUSSION
GUITAR
BASS
STRINGS
CHOIR&PAD
SYNTH.
XG
USER
ONE TOUCH SETTING
REGISTRATION MEMORY
MEMORY
CN6
to GLR-CN3
Component side

● PNR Circuit Board

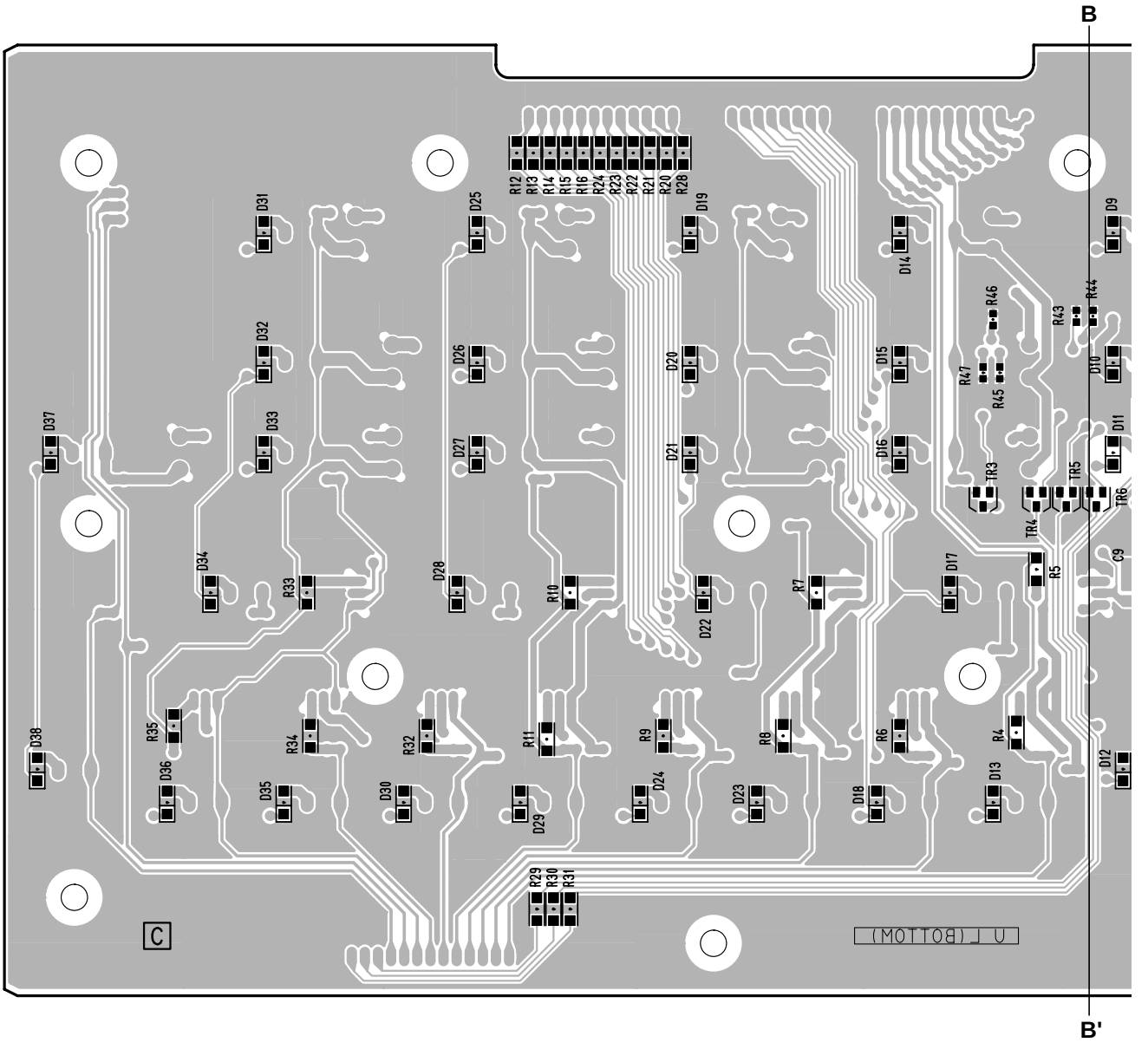

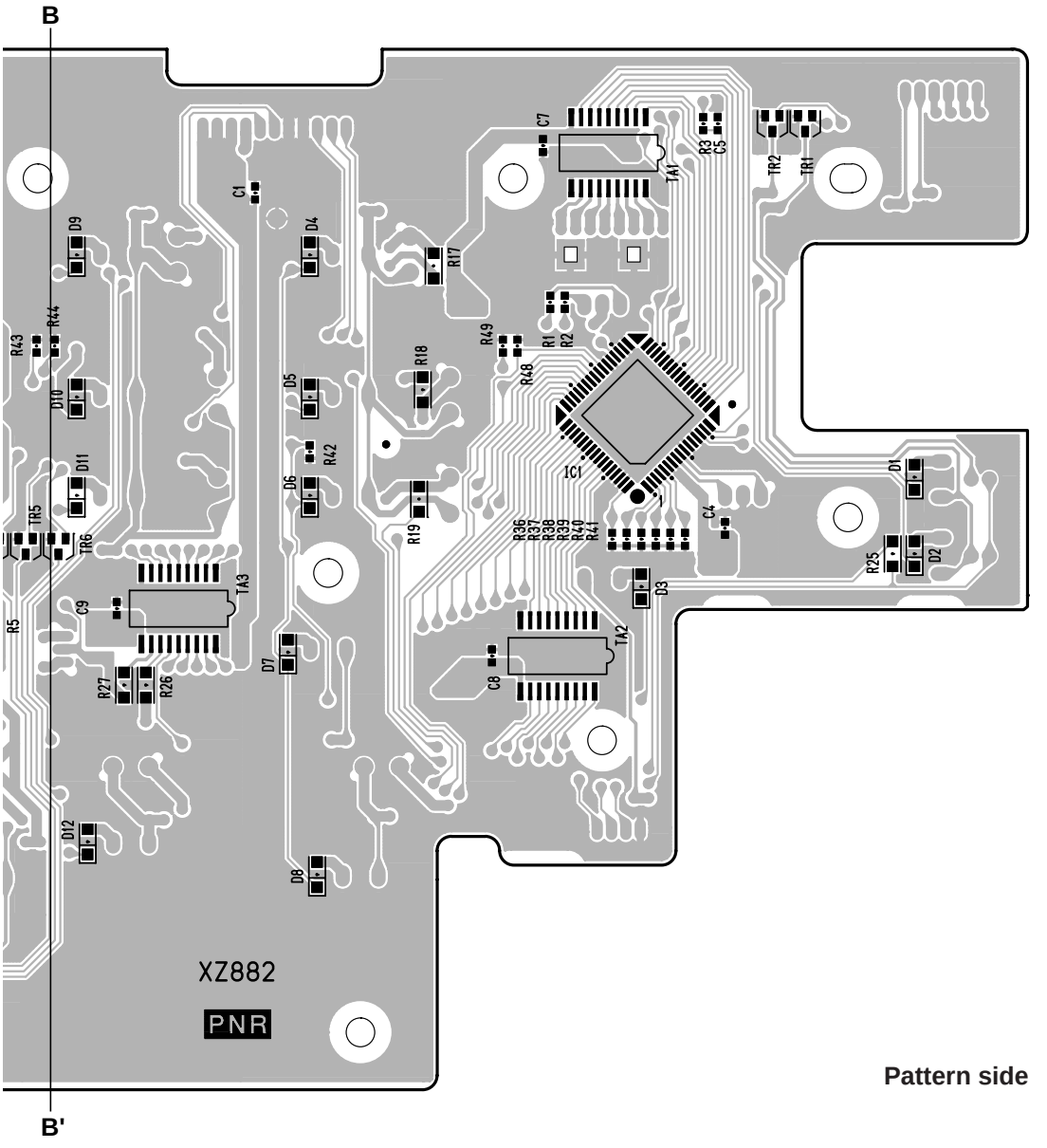

Pattern side

● ENC Circuit Board

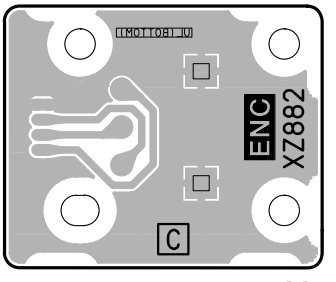

Pattern side

PNR, ENC: 2NA-V713520-2 ⚠1

● PNL Circuit Board

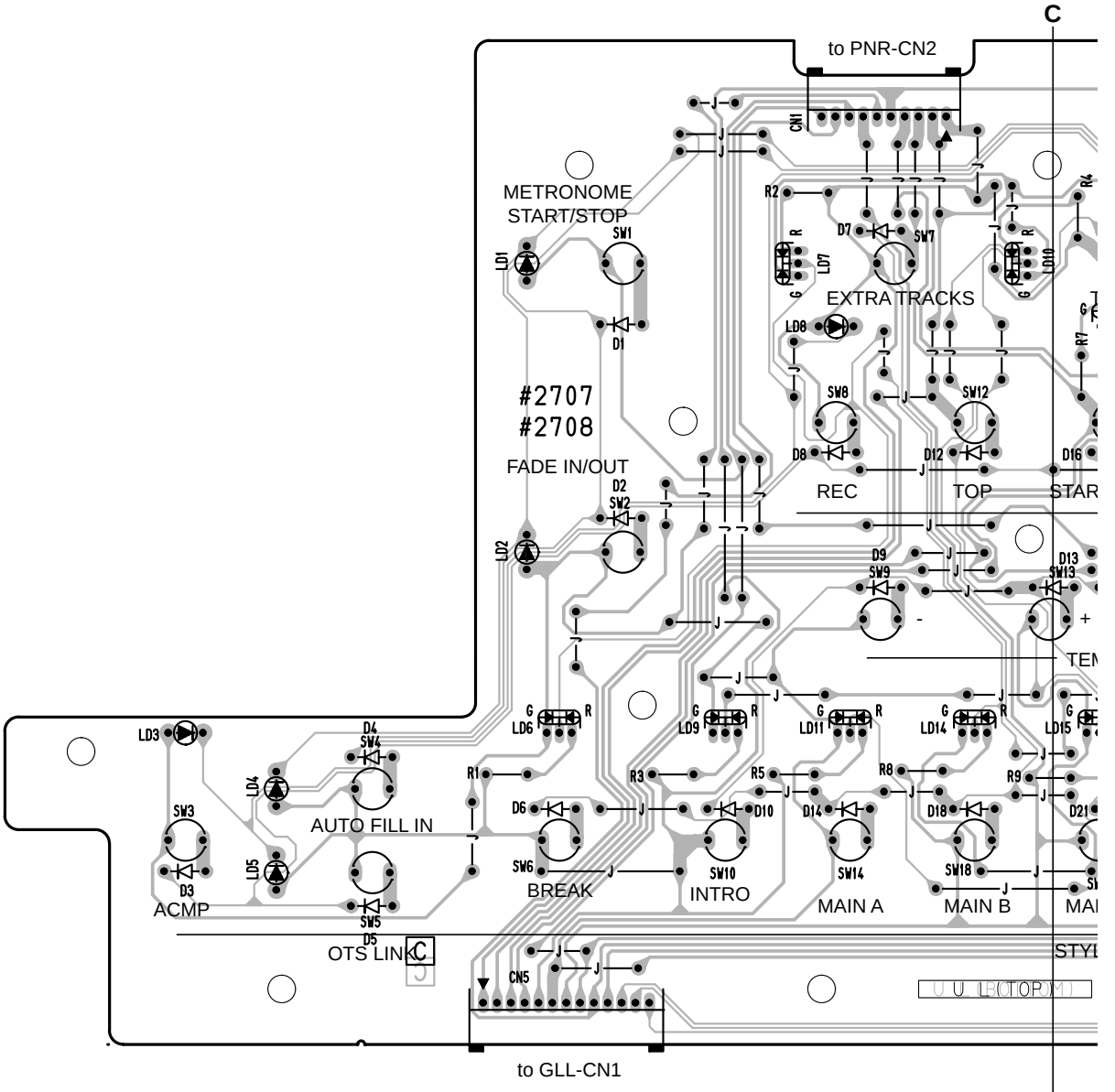

● PNCB Circuit Board

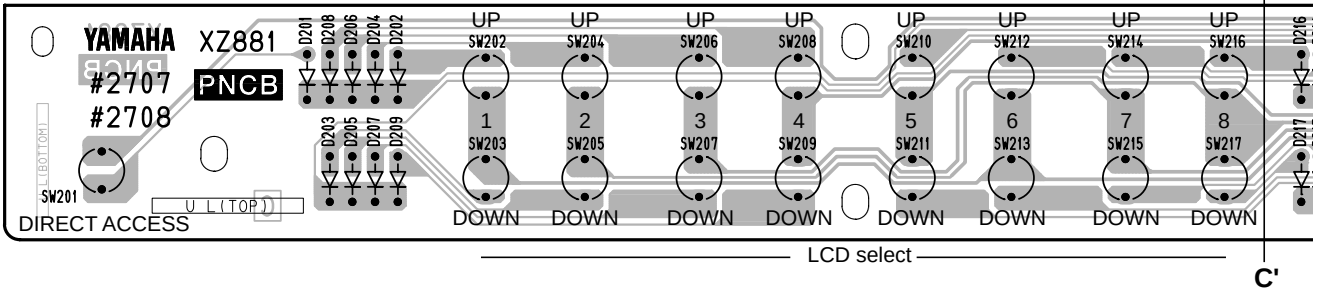

PNL, PNCB: 2NA-V713450③

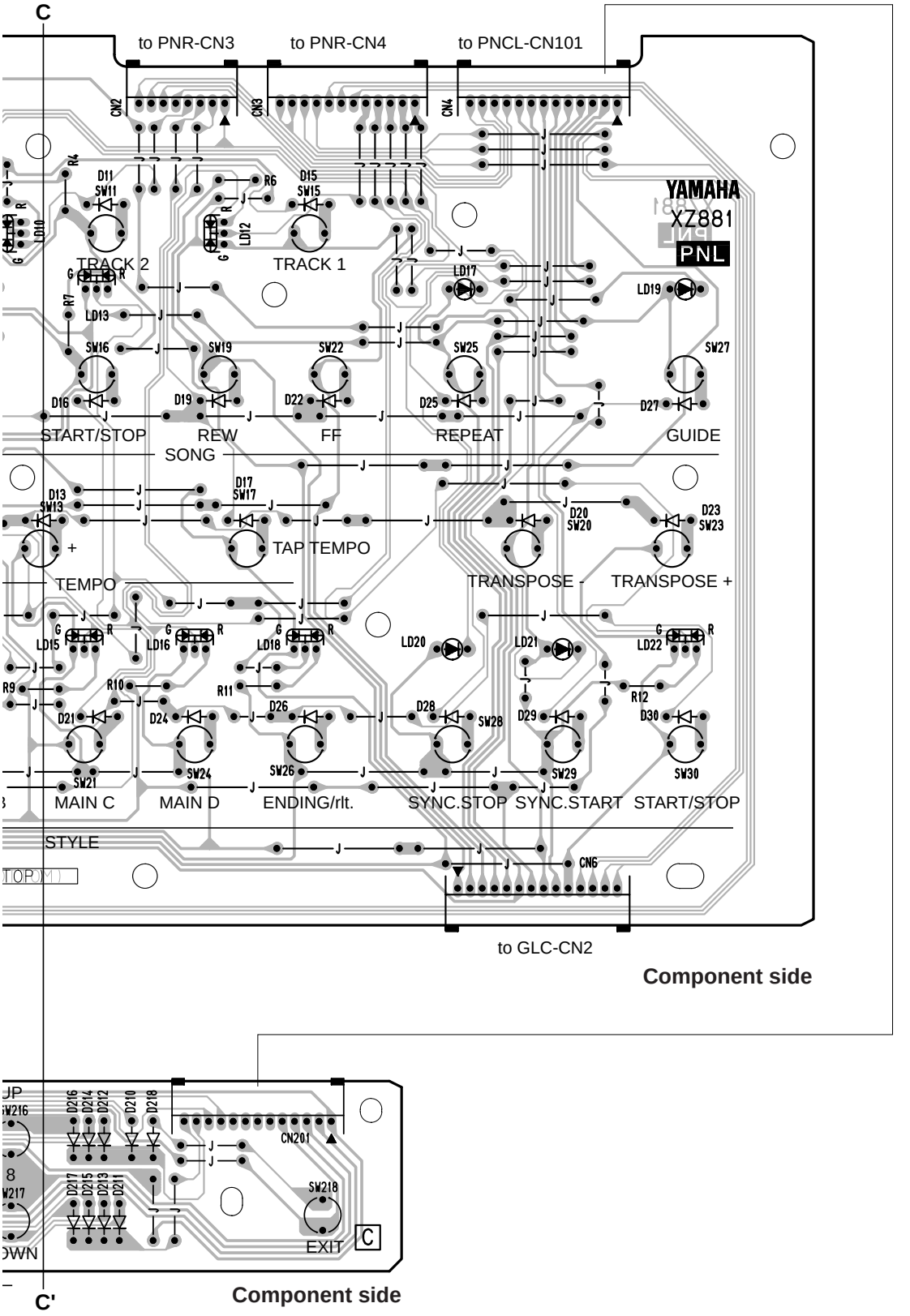

PNL, PNCB: 2NA-V713450 /3

● PNCL Circuit Board

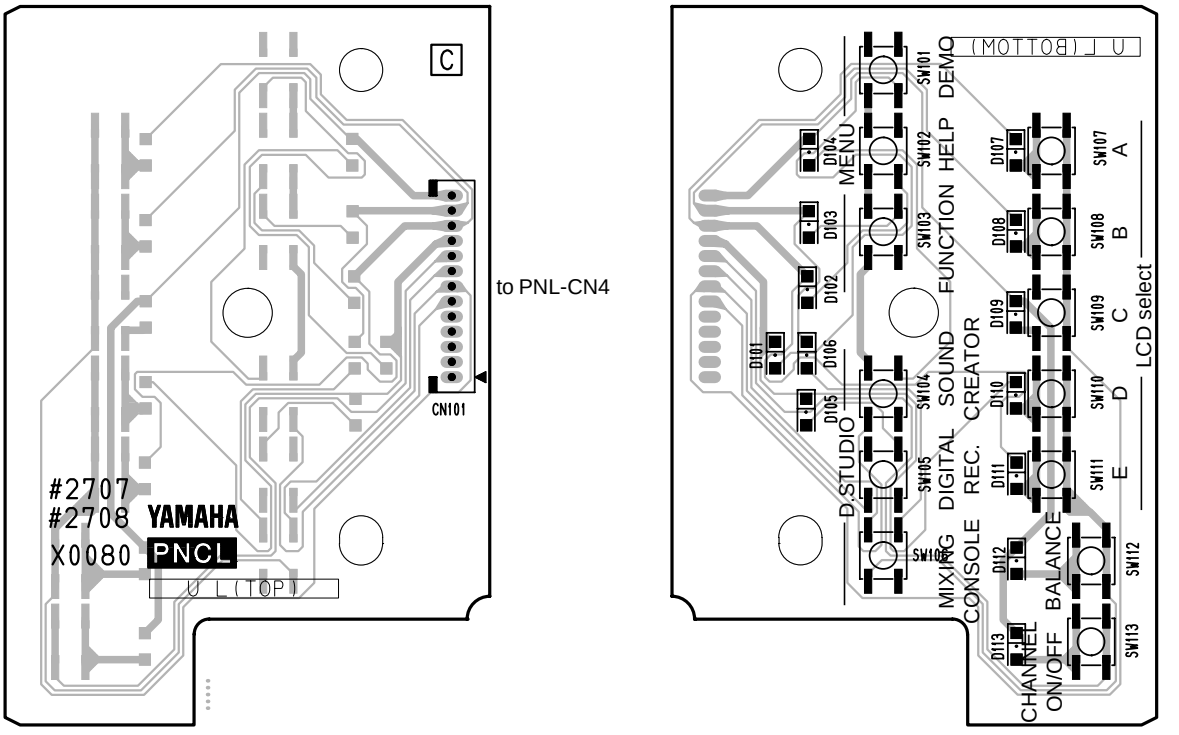

Component side **Pattern side**

● FU60 Circuit Board

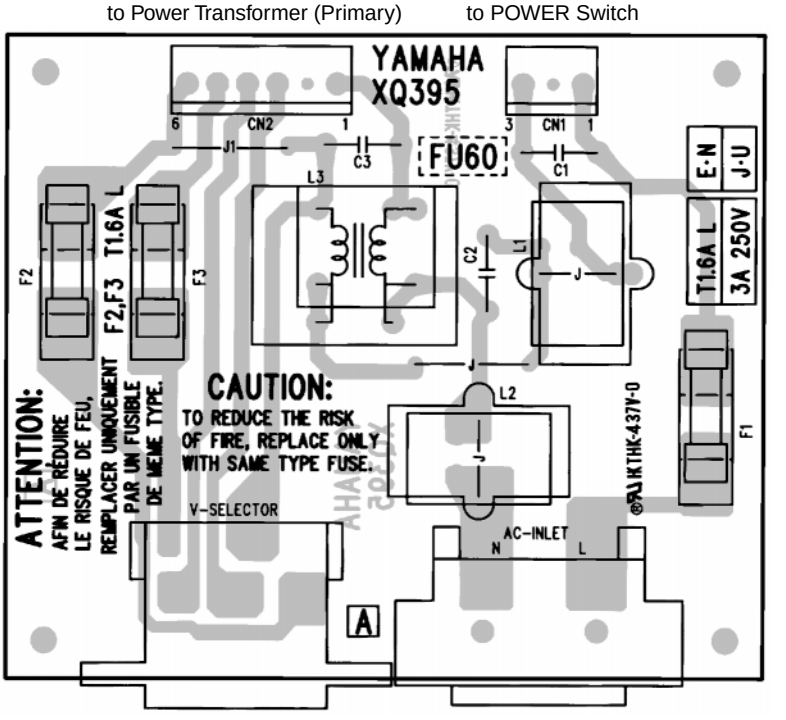

Component side

PNCL: 2NA-V713500 ⚠1
FU60: 2NA-VT47830

● PNCR Circuit Board

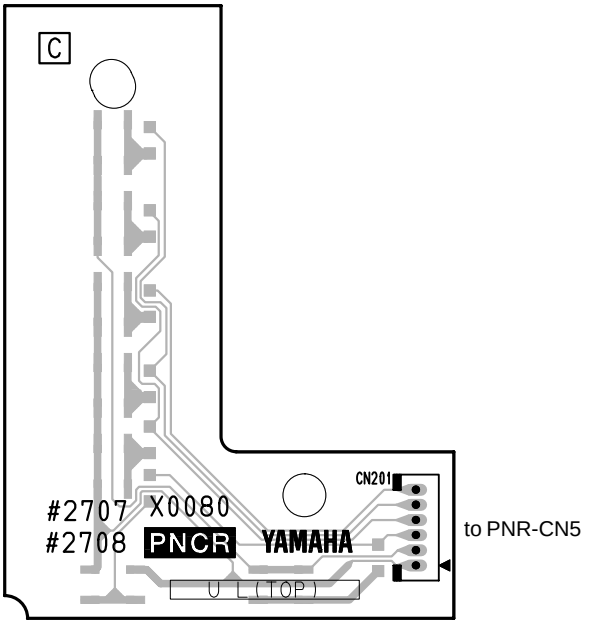

Component side

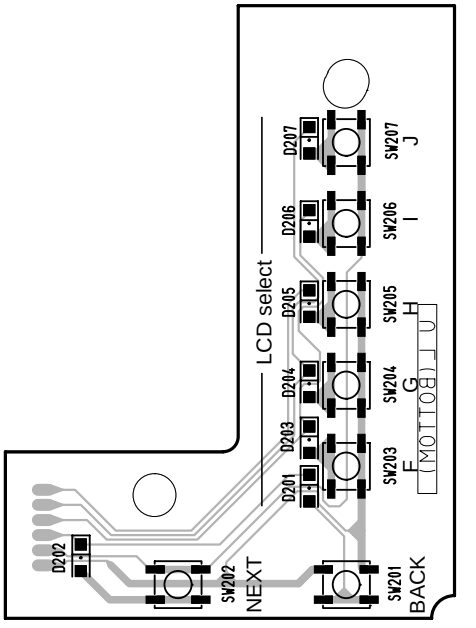

Pattern side

● SWX Circuit Board

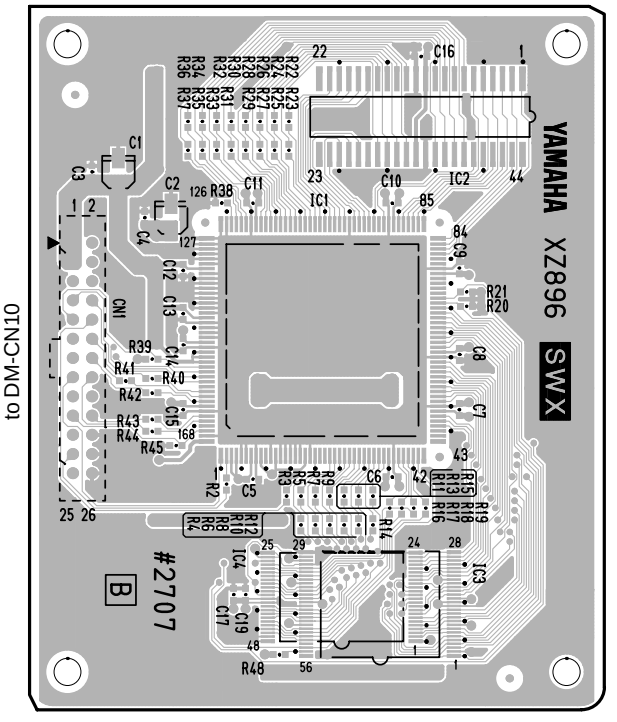

Component side

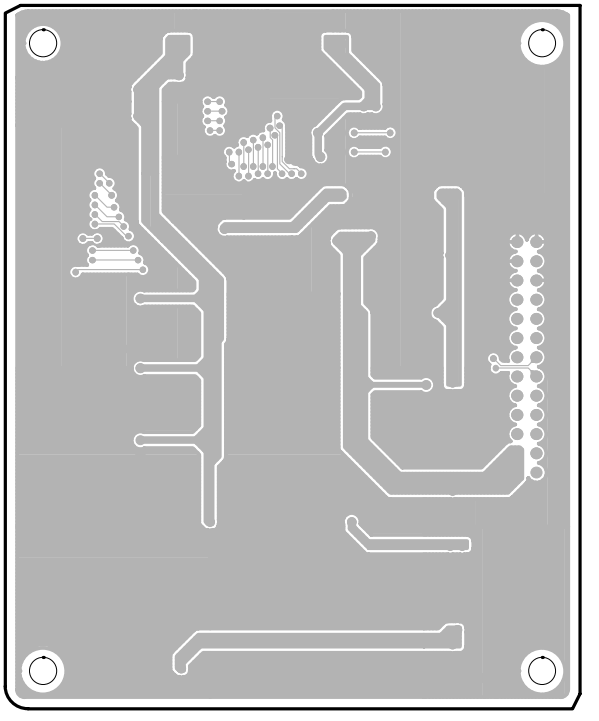

Pattern side

PNCR: 2NA-V713500 ⚠1
SWX: 2NA-V716150

● A-JACK Circuit Board

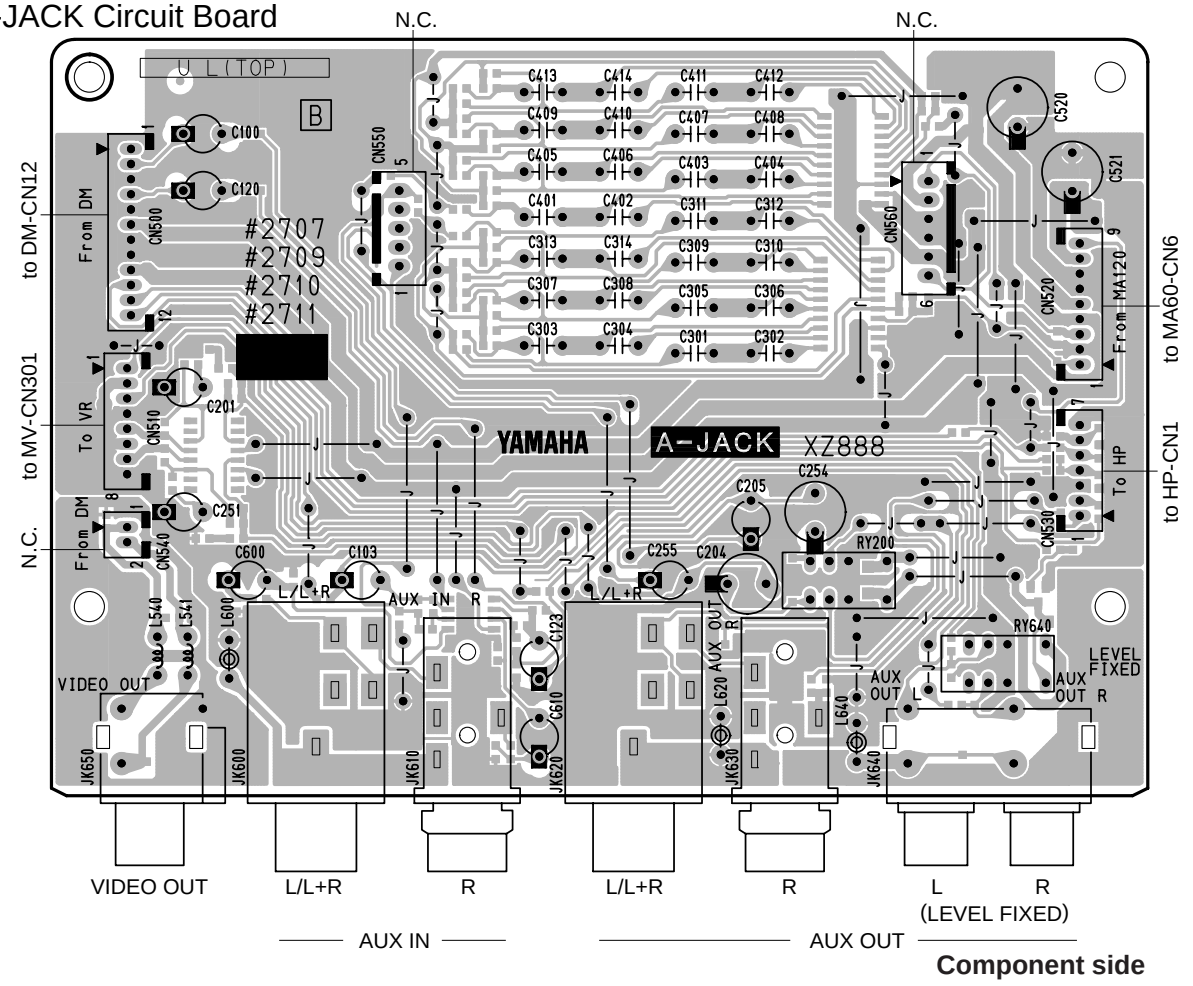

Component side

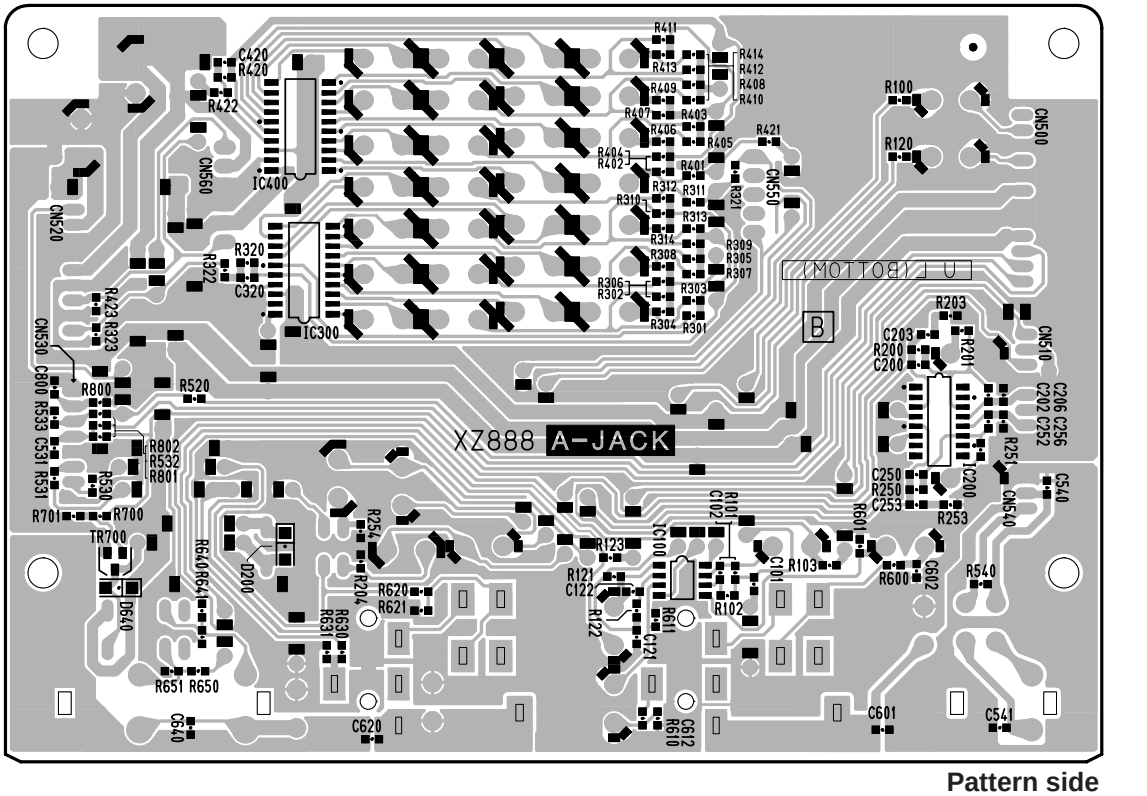

Pattern side

2NA-V714700

● D-JACK Circuit Board

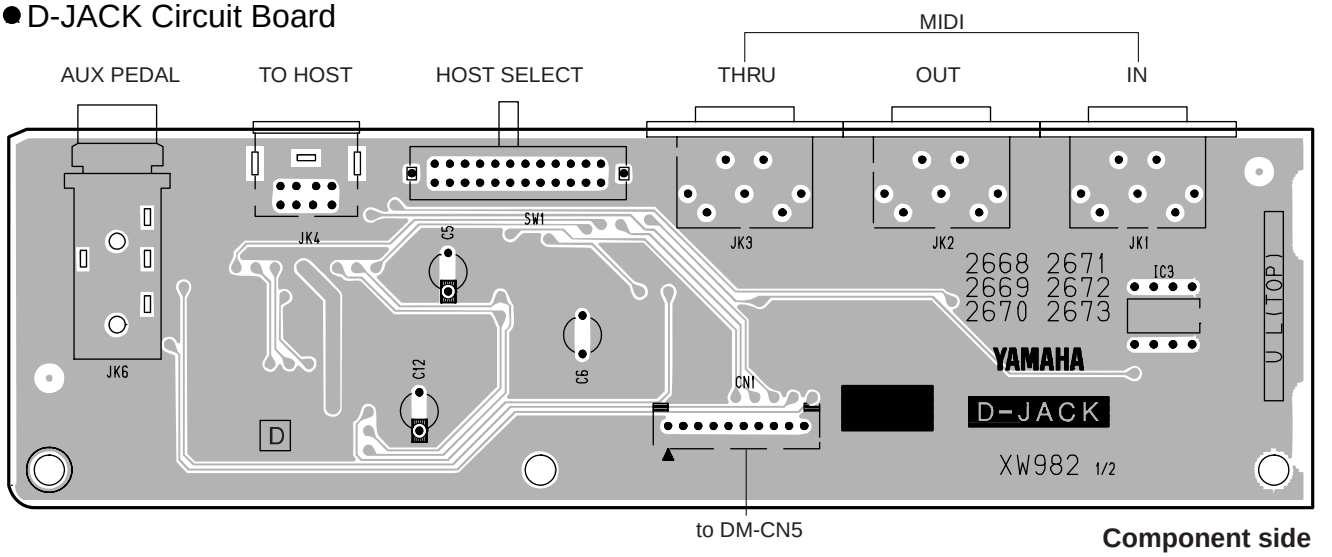

Component side

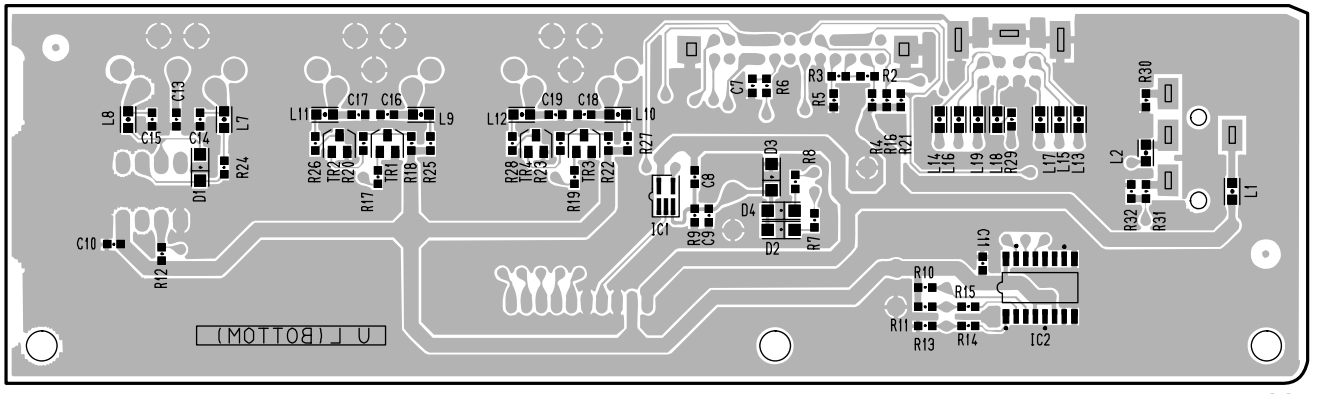

Pattern side

● PEDAL (D-JACK 2/2) Circuit Board

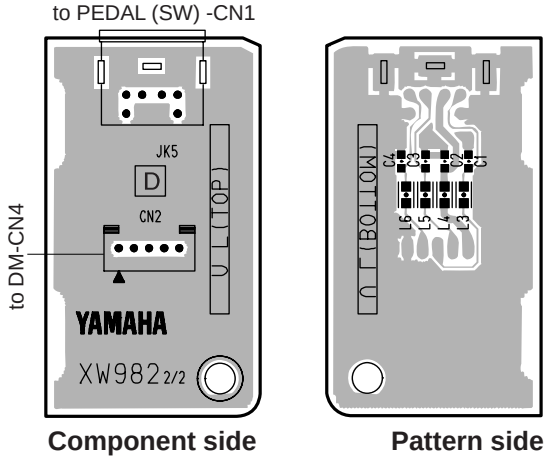

Component side **Pattern side**

● HP Circuit Board

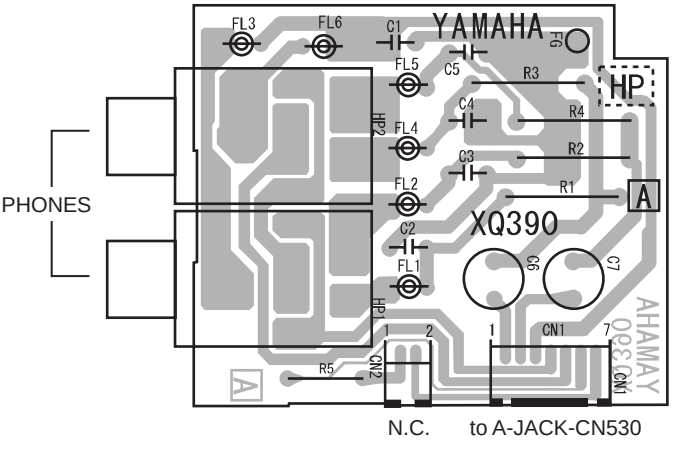

Component side

D-JACK, PEDAL (D-JACK 2/2): 2NA-V493830 ⚠1
HP: 2NA-V202110 ⚠1

● GLC Circuit Board

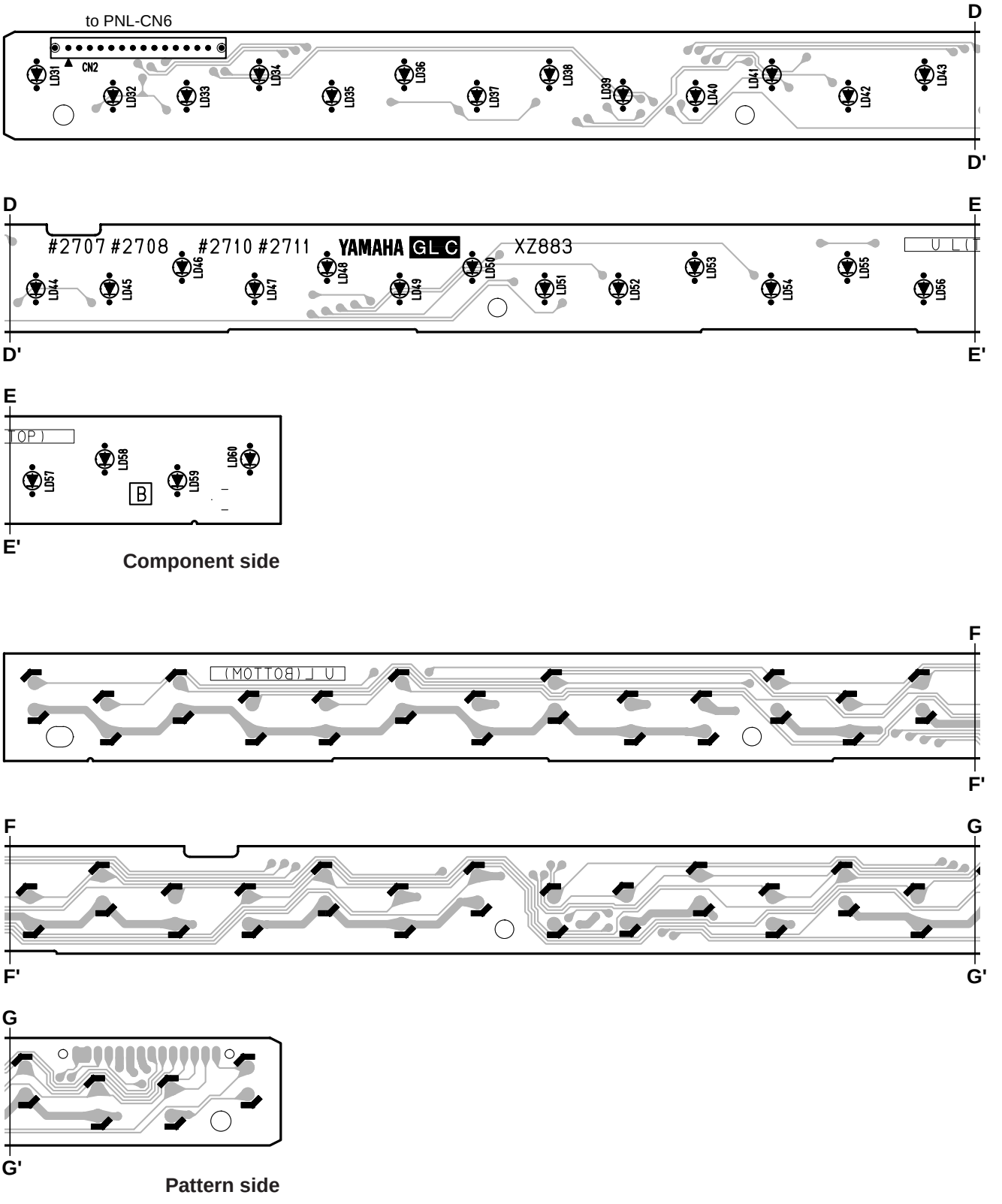

Component side

Pattern side

● GLL Circuit Board

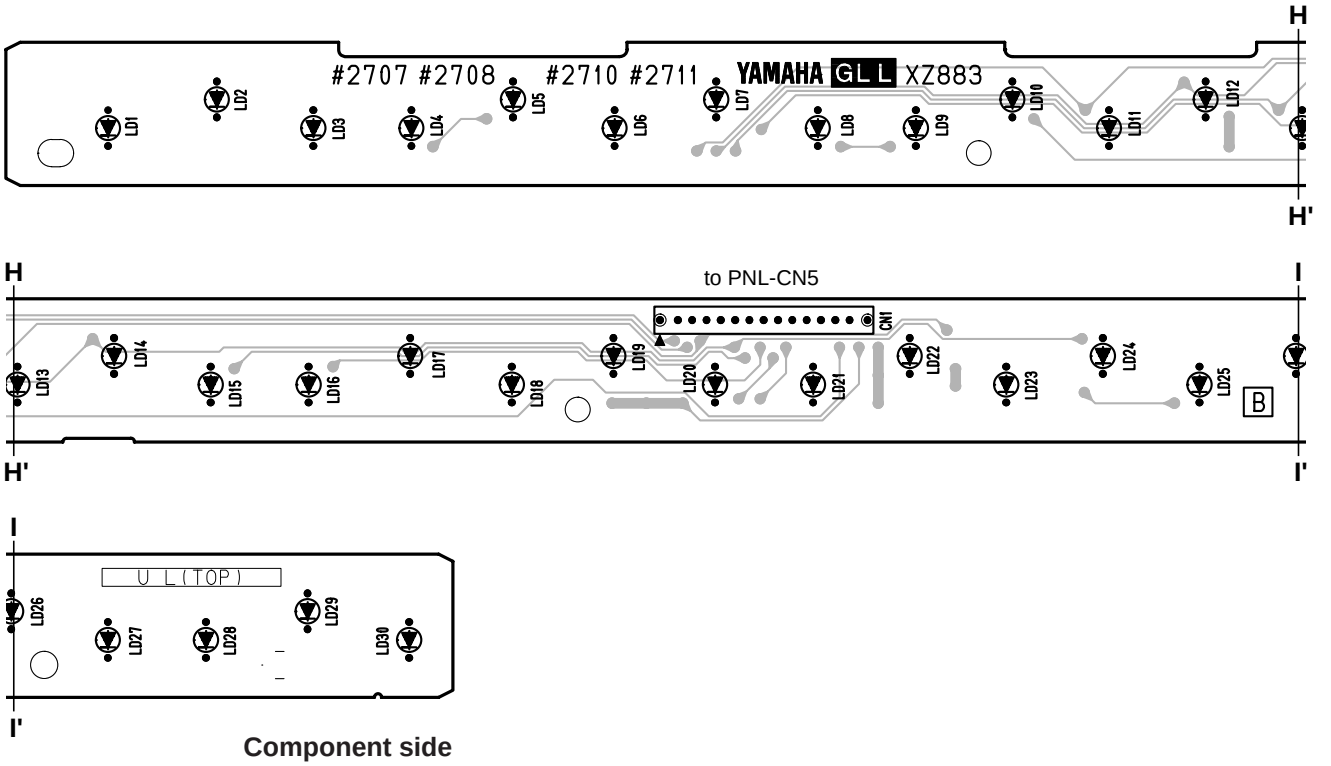

Component side

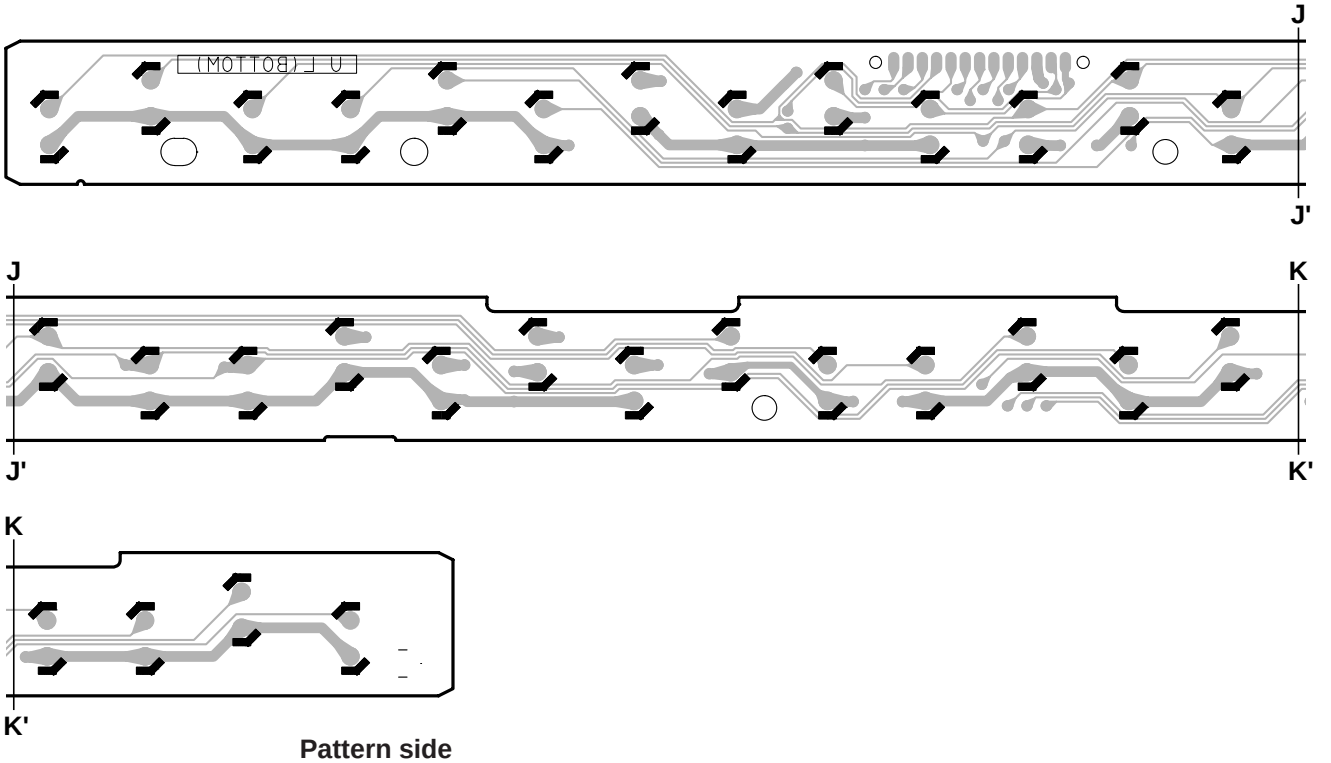

Pattern side

● GLR Circuit Board

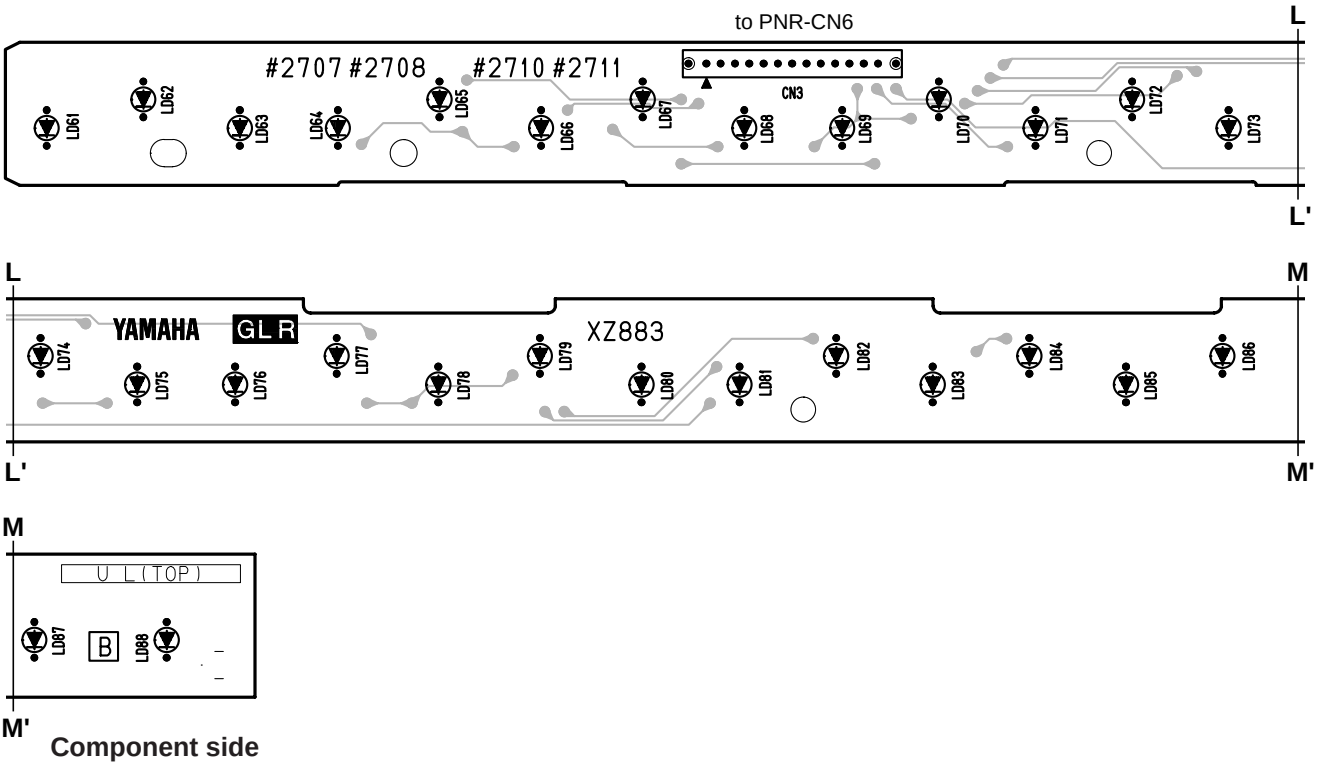

Component side

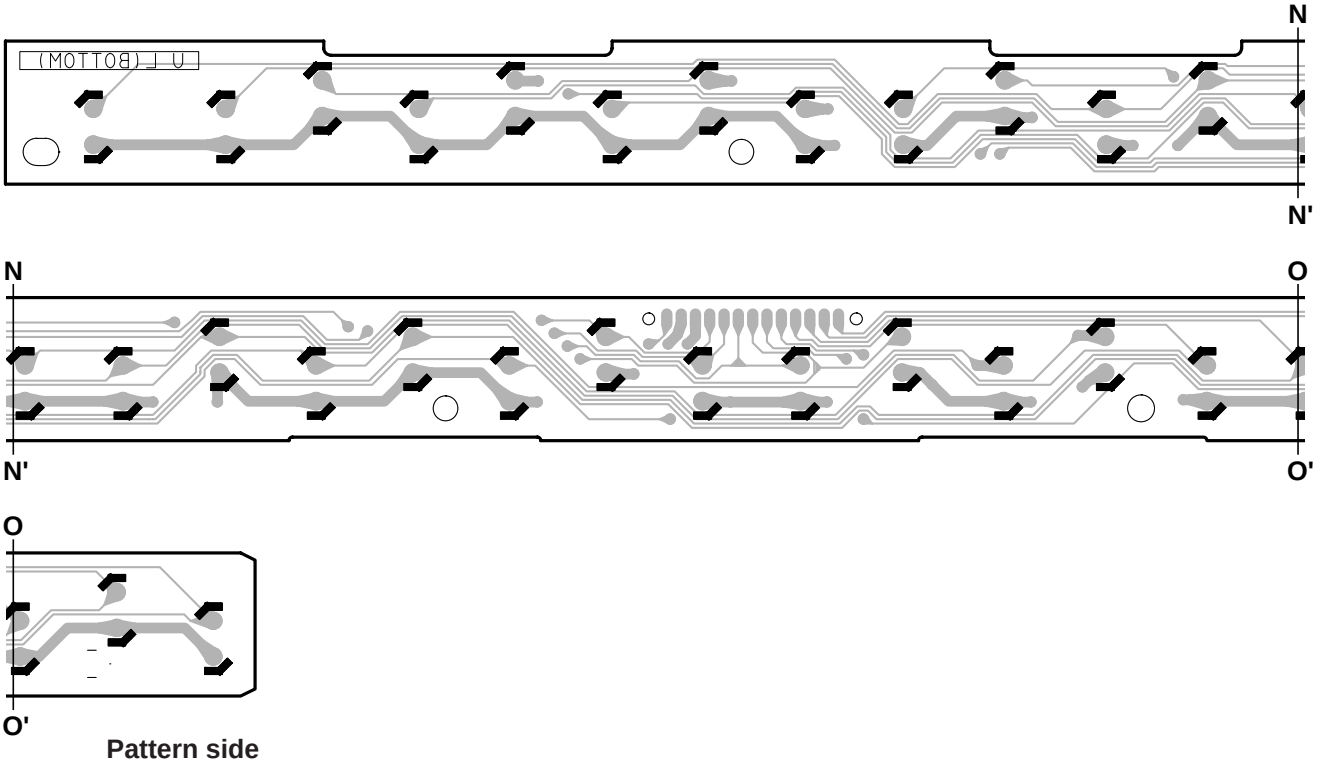

Pattern side

● PEDAL (SW) Circuit Board

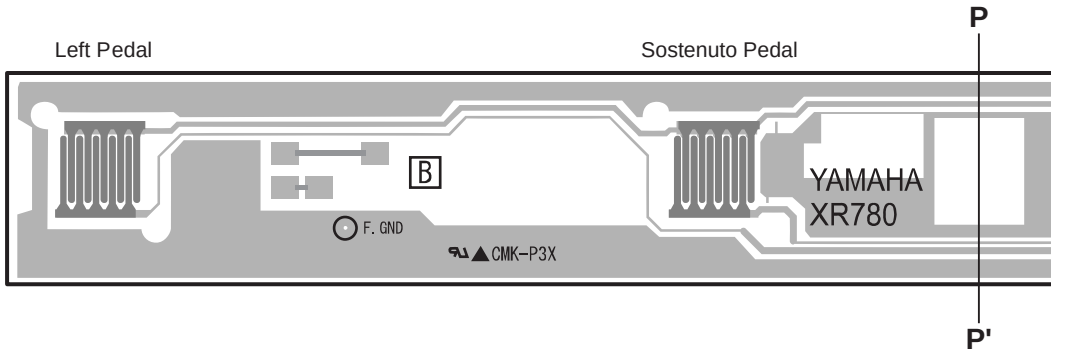

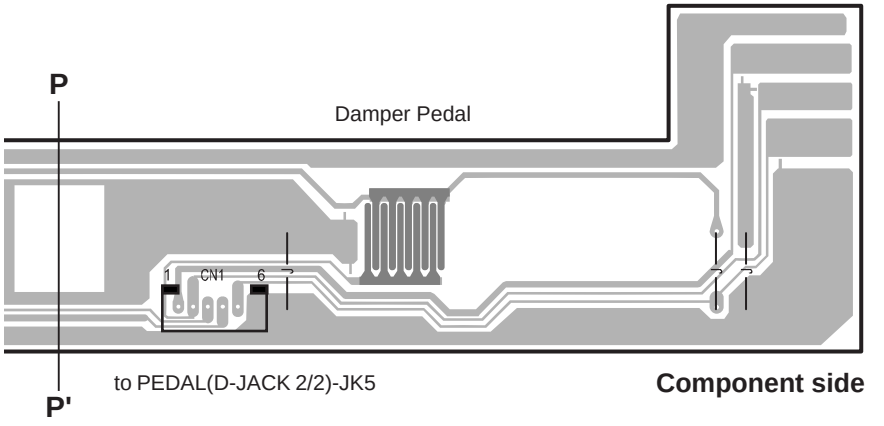

● PEDAL VR Circuit Board

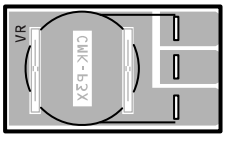

Damper Volume

Component side

● MV Circuit Board

to A-JACK-CN510

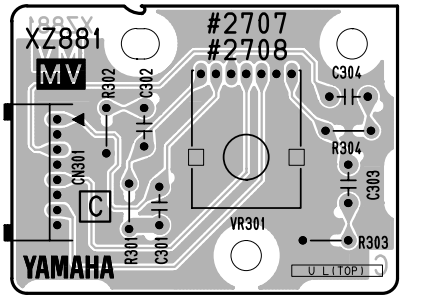

MASTER VOLUME

Component side

PEDAL (SW), PEDAL VR: 2NA-V233730 ⚠1
MV: 2NA-V713450 ⚠3

● MA60 Circuit Board

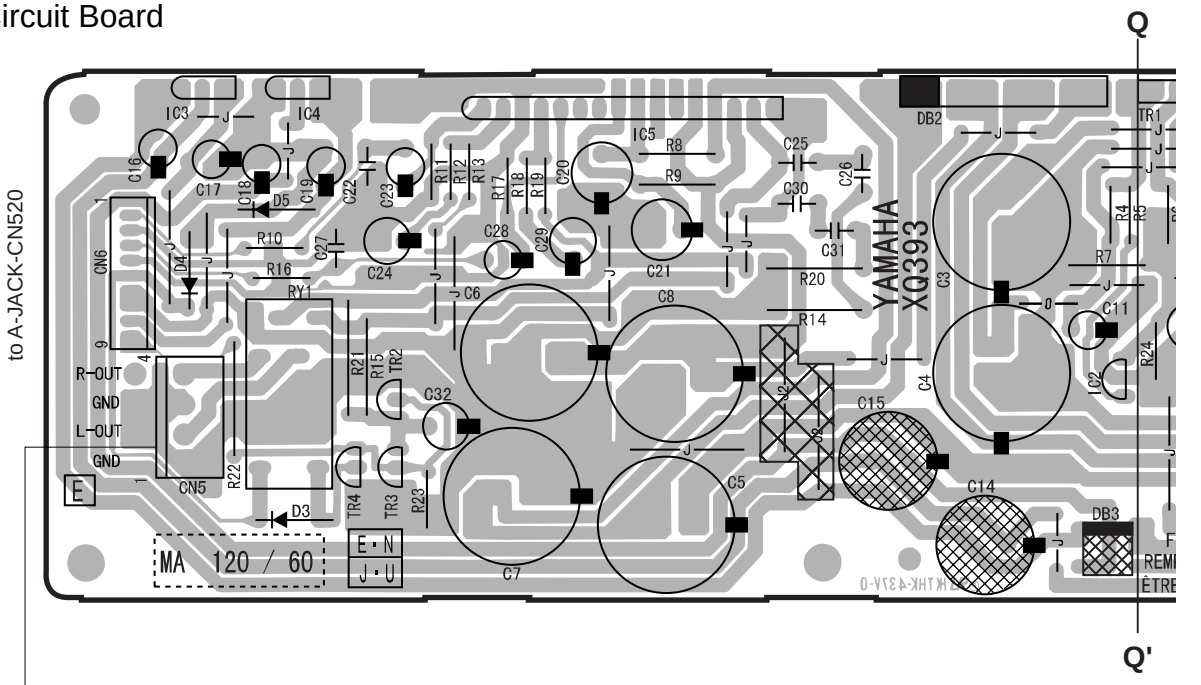

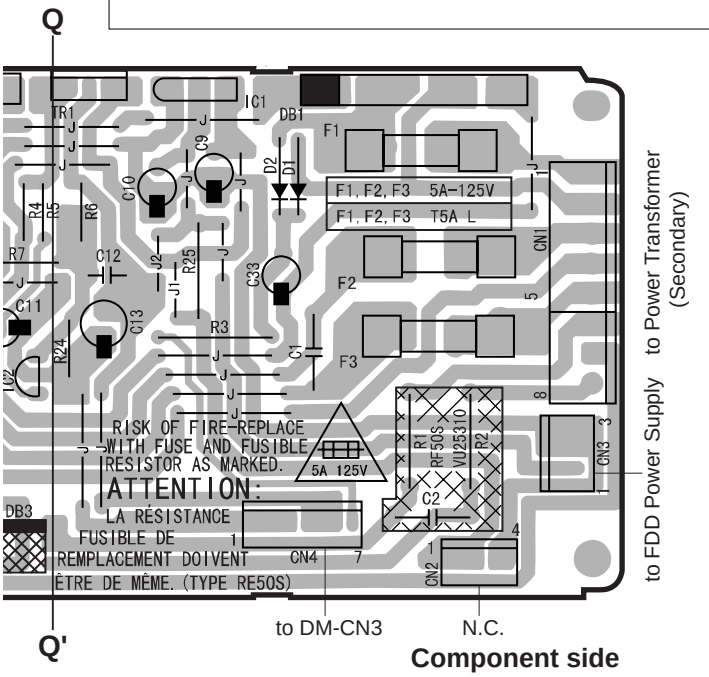

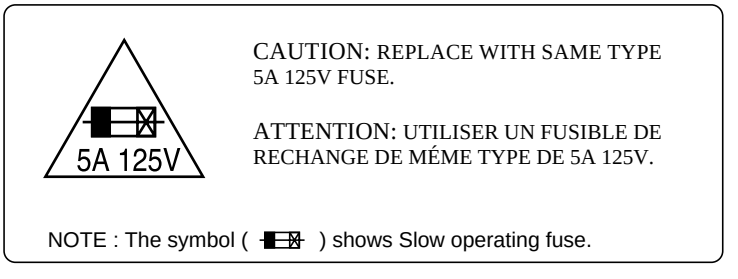

● NET1 Circuit Board

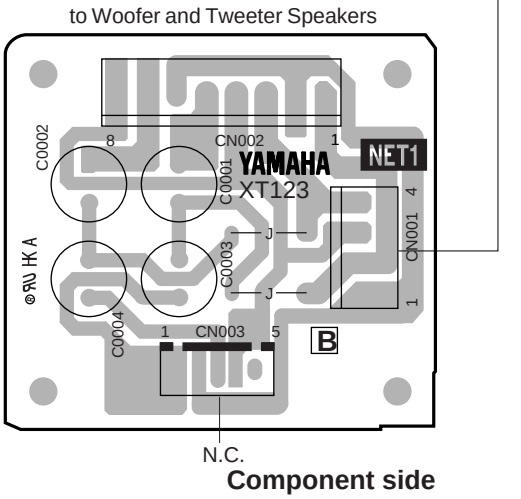

MA60: 2NA-VT14340 ⚠1
NET1: 2NA-VY64290 ⚠1

■ TEST PROGRAM

1. Preparation

1) The volume is usually moved to the use position when no volume change is required.
2) Measuring instruments: frequency counter, level meter (with JIS-C filter)
   Note: Connect a stereo plug to the [PHONES] jack at 33 ohms.
3) Jigs: foot volume (FC-7), MIDI cable, floppy disk (2HD & 2DD)

2. How to enter the Test Program

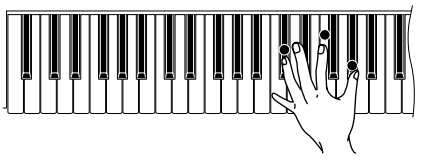

While pressing the [C#2], [F2] and [G#2] keys, turn the [POWER ON/OFF] switch on.

3. Proceeding through the Teat Program

When the test program is activated, the sign “TEST” is indicated on the LCD display.
Select the test program item to be executed by pressing the [TEMPO-] or [TEMPO+] button.
Press the [START/STOP] button to execute testing. When the test result is OK, press the [START/STOP] button to return to the test item name on display. Proceed to the next test by pressing the [TEMPO-] or [TEMPO+] button. When the test result is OK, an asterisk (*) is added in front of its item name on display.
When the test result is NG, press the [DEMO] button or the lowest (leftmost) white key on the keyboard to return to the test item name on display and then turn off the [POWER ON/OFF] switch to end the test program.

4. Test program list

No.	LCD (initial)	Test Function and Judgment criteria
1	001: Version	Displays each ROM version. ROM versions are displayed alternately on the LCD.
2	002: ROM Check1	Checks the ROMs that are connected to the CPU bus. The test results appear on the LCD. Check the LCD “ROM Check1 OK”
3	003: RAM Check1	Checks the RAMs that are connected to the CPU bus. The test results appear on the LCD. Check the LCD “RAM Check1 OK”
4	004:Flash Check1	Checks the Flash Memories that are connected to the CPU bus. The test results appear on the LCD. Check the LCD “Flash Check1 OK”
5	005: Wave ROM Check1	Checks the Wave ROMs. The test results appear on the LCD. Check the LCD “XG Wave ROM Check OK” “Natural Wave ROM1 Check OK”
6	006: Wave RAM Check1	Checks the Wave RAMs. The test results appear on the LCD. Check the LCD “XG Wave RAM Check OK” “Natural Wave RAM1 Check OK”
7	007: FDD Check	Checks the floppy disk drive unit. Insert the floppy disks one bye one (2HD or 2DD). The test will be executed immediately if an FD is inserted in the drive. After completing the test for one FD, replace it with another to continue the test. Displays “FDD Check OK” if the test result is OK. Displays “NO FD” and stands by for FD insertion if an FD is drawn out before completion of the test. Displays “PROTECT FD” if the write-protect switch of FD is on. Displays “UNFORMAT FD” if non-formatted FD is inserted.
8	008: Effect1 RAM Check	Checks the Reverb (Natural voice) RAM. Outputs the sine wave (C3) MAX at the send level and MIN at the drive level. Check the sound by hearing that there is not noise or abnormal sound.
10	010: Effect3 RAM Check	Checks the XG1 RAM. Outputs the sine wave (C3) MAX at the send level and MIN at the drive level. Check the sound by hearing that there is not noise or abnormal sound.
12	012: TG 1 Check	Checks the Sound Source 1 (Autoscale) (XG) Sequentially outputs the sine wave starting from the low keys (from C2 to G4) by switching the channel of the sound source. Check the sound by hearing that there is not noise or abnormal sound.
13	013: TG 2 Check	Checks the Sound Source 2 (Autoscale) (Natural Voice 1) Sequentially outputs the sine wave starting from the low keys (from C2 to G4) by switching the channel of the sound source. Check the sound by hearing that there is not noise or abnormal sound.

No.	LCD (initial)	Test Function and Judgment criteria
15	015: Pitch Check	Pitch check: Connect the frequency counter to the [PHONES] jack (33 ohm load). Outputs the sine wave at 440 +/-0.2 Hz. (PAN = Center) Decline quantity check of the volume: Connect the level meter (with a JIS-C filter) to the [PHONES] jack. Set the [MASTER VOLUME] at MIN and check the output level. **PHONES L, R:** less than -80.0 dBm
16	016: Output R Check	Connect the level meter (with a JIS-C filter) to each terminal (PHONES, AUX OUT L/L+R, R, AUX OUT (LEVEL FIXED) L, R). Set the [MASTER VOLUME] at MAX and check the R channel output level. (1 kHz sine wave, PAN=R) (PHONES L, R: 33 ohm load AUX OUT L/L+R, R: 10 kohm load AUX OUT (LEVEL FIXED) L, R: 10 kohm load) **PHONES L:** less than -31.5 dBm **PHONES R:** +8.5 dBm +/-2 dB **AUX OUT L/L+R:** less than -38.0 dBm **AUX OUT R:** +12.0 dBm +/-2 dB **AUX OUT (LEVEL FIXED) L:** less than -39.5 dBm **AUX OUT (LEVEL FIXED) R:** +10.5 dBm +/-2 dB
17	017: Output L Check	Connect the level meter (with a JIS-C filter) to each terminal (PHONES, AUX OUT L/L+R, R, AUX OUT (LEVEL FIXED) L, R). Set the [MASTER VOLUME] at MAX and check the L channel output level. (1 kHz sine wave, PAN=L) (PHONES L, R: 33 ohm load AUX OUT L/L+R, R: 10 kohm load AUX OUT (LEVEL FIXED) L, R: 10 kohm load) **PHONES L:** +8.5 dBm +/-2 dB **PHONES R:** less than -31.5 dBm **AUX OUT L/L+R:** +12.0 dBm +/-2 dB **AUX OUT R:** less than -38.0 dBm **AUX OUT (LEVEL FIXED) L:** +10.5 dBm +/-2 dB **AUX OUT (LEVEL FIXED) R:** less than -39.5 dBm
18	018: EQ Low Check	Check the sine wave output of EQ-Low frequency at about 65.4 Hz (C1). (PAN=Center)
19	019: EQ Mid Check	Check the sine wave output of EQ-Mid frequency at about 523 Hz (C4). (PAN=Center)
20	020: EQ High Check	Check the sine wave output EQ-High frequency at about 4186 Hz (C7). (PAN=Center)
22	022: D/A Noise Check	It is the item inspecting in the factory.
23	023: SW, LED Check	Check the switches on the panel and LED. Press the switches on the LCD as instructed. A pre-assigned note is output when the switch is pressed. (See 49-page table 1). When the switch with LED is pressed, that LED will light up. As the check result appears on the LCD when all the switches are pressed as instructed. Check that OK is displayed. For the dial check, confirm that the turning the data dial clockwise will increase the numerical value from 50 to 100 and turning it counterclockwise will reduce it from 100 to 0.
24	024: All Panel LED On Check	Check that all panel LEDs are on. The 2-colors LED light up in orange.
25	025: Red LED On Check	Check that all red LEDs are on. The 2-colors LED light up in red.
26	026: Green LED On Check	Check that all green LEDs are on. The 2-colors LED light up in green.
27	027: All Key LED On Check	Check that all key LEDs are on.
28	028: All LCD On Check	Check that all LCD dots are on.
29	029: All LCD Off Check	Check that all LCD dots are off.
31	031: LCD Brightness Check	Press the [1] to [4] switches of [ONE TOUCH SETTING] in order. The brightness of the LCD grows lighter every time a switch is pressed.
32	032: Soft Pedal Check	Check that the C3 note is output when pressing and releasing the soft pedal, and that the C4 note is output when pressing it again.
33	033: Sostenuto Pedal Check	Check that the C3 note is output when pressing and releasing the sostenuto pedal, and that the C4 note is output when pressing it again.
34	034: Damper Pedal Check	Check that the C3 note is output when pressing and releasing the damper pedal, and that the C4 note is output when pressing it again.
35	035: Aux Pedal Check	Connect the foot volume (FC-7) to the [AUX PEDAL 1] jack. Check that the C3 note is output when fully pressing the pedal to the back (to maximum), and that the C4 note is output when fully pressing the pedal to rhe front (to minimum).
40	040: MIDI Check	After connecting the [MIDI IN] jack and [MIDI OUT] jack with a MIDI cable, execute the test. Set the [HOST SELECT]switch to “MIDI”. Check that the C4 note is output and that the LCD displays “MIDI Check OK”. If there is no input after one second since signal output, it is judged NG.
41	041: TO HOST Check	Connect pin 3 to pin 5 and pin 6 to pin 8 of the [TO HOST] terminal, and execute the test. Check that the following note sounds when changing the [HOST SELECT] switch position according to the LCD indication; the LCD will display “TO HOST Check OK”. (PC1: note C3; PC2: note C4; MAC: note C5) If there is no input after one second since signal output, it is judged NG.

No.	LCD (initial)	Test Function and Judgment criteria
43	043: ROM Check2	Checks the ROMs that are connected to the CPU bus. Check the LCD “ROM Check2 OK”
44	044: RAM Check2	Checks the RAMs that are connected to the CPU bus. Check the LCD “RAM Check2 OK”
45	045: Flash Check2	Checks the Flash Memories that are connected to the CPU bus. Check the LCD “Flash Check2 OK”
47	047: Wave RAM Check2	Checks the Wave RAMs. Check the LCD “XG Wave RAM Check OK” “Natural Wave RAM1 Check OK”
55	055: Factory Set	If this test is executed, the Flash ROMs will be initialized when the power is turned on in the next time.
56	056: Test Exit	Exit from the test program after executing this test.

Note: 0 dBm=0.775 V

Time is required to complete the checks performed by test No. 43–47.

- **Power On Reset**

  The System Backup is initialized and set to the factory preset data when the [POWER ON/OFF] switch is turned on while pressing the highest (rightmost) white key on the keyboard.

• TABLE 1

ORDER	SWITCH	NOTE
1	METRONOME	C2
2	EXTRA TRACKS	C#2
3	TRACK2	D2
4	TRACK1	D#2
5	REC	E2
6	TOP	F2
7	START/STOP (SONG)	F#2
8	RW	G2
9	FF	G#2
10	REPEAT	A2
11	GUIDE	A#2
12	FADE IN/OUT	B2
13	TEMPO -	C3
14	TEMPO +	C#3
15	TAP TEMPO	D3
16	TRANSPOSE -	D#3
17	TRANSPOSE +	E3
18	ACCOMP. ON/OFF	F3
19	AUTO FILL IN	F#3
20	OTS LINK	G3
21	BREAK	G#3
22	INTRO	A3
23	MAIN A	A#3
24	MAIN B	B3
25	MAIN C	C4
26	MAIN D	C#4
27	ENDING	D4
28	SYNC STOP	D#4
29	SYNC START	E4
30	START/STOP (STYLE)	F4
31	DEMO	F#4
32	HELP	G4
33	FUNCTION	G#4
34	SOUND CREATOR	A4
35	DIGITAL RECORDING	A#4
36	MIXING CONSOLE	B4
37	A	C5
38	B	C#5
39	C	D5
40	D	D#5
41	E	E5
42	BALANCE	F5
43	PART ON/OFF	F#5
44	DIRECT ACCESS	G5
45	1-U	G#5
46	1-L	A5
47	2-U	A#5
48	2-L	B5
49	3-U	C6
50	3-L	C2
51	4-U	C#2
52	4-L	D2
53	5-U	D#2

ORDER	SWITCH	NOTE
54	5-L	E2
55	6-U	F2
56	6-L	F#2
57	7-U	G2
58	7-L	G#2
59	8-U	A2
60	8-L	A#2
61	EXIT	B2
62	BACK	C3
63	NEXT	C#3
64	F	D3
65	G	D#3
66	H	E3
67	I	F3
68	J	F#3
69	LAYER	G3
70	LEFT	G#3
71	ENTER	A3
72	REVERB	A#3
73	DSP	B3
74	SLOW/FAST	C4
75	HARMONY ECHO	C#4
76	POLY/MONO	D4
77	LEFT HOLD	D#4
78	PIANO &HARPSI	E4
79	E.PIANO	F4
80	ORGAN & ACCORDION	F#4
81	PERCUSSION	G4
82	GUITAR	G#4
83	BASS	A4
84	BRASS	A#4
85	W.WIND	B4
86	STRING	C5
87	CHOIR & PAD	C#5
88	SYNTH	D5
89	XG	D#5
90	USER	E5
91	MUSIC FINDER	F5
92	OTS1	F#5
93	OTS2	G5
94	OTS3	G#5
95	OTS4	A5
96	PIANO	A#5
97	FREEZE	B5
98	REGIST1	C6
99	REGIST2	C2
100	REGIST3	C#2
101	REGIST4	D2
102	REGIST5	D#2
103	REGIST6	E2
104	REGIST7	F2
105	REGIST8	F#2
106	MEMORY	G2

■ SYSTEM RESET

This operation lets you restore the CVP-205/205M to its original factory settings. These settings include System Setup, MIDI Setup, User Effect, Music Finder, and Files & Folders.

Restores the System Setup parameters to the original factory settings. You can also restore only the System Setup settings by simultaneously holding down the highest key on the keyboard (C7) and turning on the power.

Restores the MIDI templates to the original factory settings.

Restores the User Effects to the original factory settings.

Restores the Music Finder data to the original factory.

Deletes all files and folders stored in the User page.

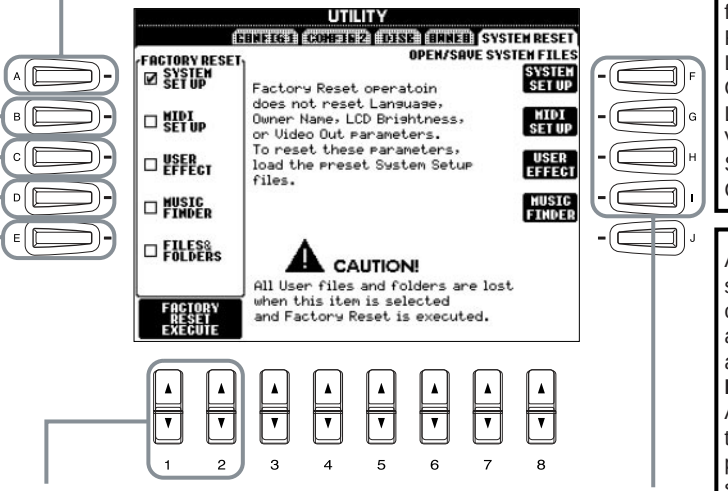

Executes the Factory Reset operation for all items checkmarked above.

These call up the corresponding Open/Save displays. These let you store the corresponding data as files to disk, for future recall. Pressing each of these buttons calls up the corresponding Open/Save display, from which you can select the corresponding PRESETpage. From this PRESET page, you can save the relevant data.

NOTE

The functions and settings below do not apply to the Factory Reset operation. However, you can restore these to their original settings by calling up the preset System Setup files, using the Open/Save System Files function.
Language
Owner Name
LCD Brightness
Video Out settings (NTSC/PAL, Size, Character Color,Background Color)

NOTE

All Music Finder records can be stored together as a single file. When calling up a stored file, a message appears prompting you to replace or append the records as desired.
Replace:
All Music Finder records currently in the instrument are deleted and replaced with the records of the selected file.
Append:
The records called up are added to the vacant record numbers.

MIDI IMPLEMENTATION CHART

YAMAHA [Clavinova]
Model CVP-203 MIDI Implementation Chart
(Natural sound source)

Date : 25,Jun 2001
Version : 1.00

Function...		Transmitted	Recognized	Remarks
Basic Channel	Default	1 - 16	1 - 16	
	Changed	1 - 16	1 - 16	
Mode	Default	3	3	
	Messages	X	X	
	Altered	**********	X	
Note Number : True voice		0 - 127 **********	0 - 127 0 - 127	
Velocity	Note ON	O 9nH,v=1-127	O 9nH,v=1-127	
	Note OFF	X 9nH,v=0	X	
After Touch	Key's	X	X	
	Ch's	X	X	
Pitch Bend		O	O 0 - 24 semi	
Control Change	0,32	O	O	Bank Select
	1,5	X	X	
	7,10,11	O	O	
	6,38	O	O	Data Entry
	64,66,67	O	O	
	65	X	X	Portamento
	71-74	X	X	Sound Controller
	84	X	X	Portament Cntrl
	91,93	O	O	
	94	X	X	
	96-97	X	O	RPN Inc,Dec
	98-99	X	X	NRPN LSB,MSB
	100-101	O	O	RPN LSB,MSB
	120	X	O	All Sound Off
	121	X	O	Reset All Cntrls
Prog Change : True #		O 0 - 127 **********	O 0 - 127	
System Exclusive		O	O	
Common : Song Pos.		X	X	
: Song Sel.		X	X	
: Tune		X	X	
System : Clock		O	O	
Real Time : Commands		O	O	
Aux : All Sound Off		X	O (120,126-127)	
: Reset All Cntrls		X	O (121)	
: Local ON/OFF		X	X	
Mes- : All Notes OFF		X	O (123-125)	
sages: Active Sense		O	O	
: Reset		X	X	
Notes:				

Mode 1 : OMNI ON , POLY
Mode 2 : OMNI ON ,MONO
Mode 3 : OMNI OFF, POLY
Mode 4 : OMNI OFF,MONO

O: Yes
X: No

YAMAHA [Clavinova] Date : 25,Jun 2001
Model CVP-203 MIDI Implementation Chart Version : 1.00
(XG sound source)

Function...		Transmitted	Recognized	Remarks
Basic Channel	Default	1 - 16	1 - 16	
	Changed	1 - 16	1 - 16	
Mode	Default	3	3	
	Messages	X	X	
	Altered	**********	X	
Note Number : True voice		0 - 127 **********	0 - 127 0 - 127	
Velocity	Note ON	o 9nH,v=1-127	o 9nH,v=1-127	
	Note OFF	x 9nH,v=0	x	
After Touch	Key's	x	x	
	Ch's	x	o	
Pitch Bend		o	o 0 - 24 semi	
Control Change	0,32	o	o	Bank Select
	1,5,7,10,11	o	o	
	6,38	o	o	Data Entry
	64,65,66,67	o	o	
	71-74	o	o	Sound Controller
	84	o	o	Portament Cntrl
	91,93,94	o	o	Effect Depth
	96-97	x	o	RPN Inc,Dec
	98-99	o	o	NRPN LSB,MSB
	100-101	o	o	RPN LSB,MSB
	120	x	o	All Sound Off
	121	x	o	Reset All Cntrls
Prog Change : True #		o 0 - 127 **********	o 0 - 127	
System Exclusive		o	o	
Common : Song Pos.		x	x	
: Song Sel.		x	x	
: Tune		x	x	
System : Clock		o	o	
Real Time : Commands		o	o	
: All Sound Off		x	o (120,126-127)	
Aux : Reset All Cntrls		x	o (121)	
: Local ON/OFF		x	x	
Mes- : All Notes OFF		x	o (123-125)	
sages: Active Sense		o	o	
: Reset		x	x	
Notes:				

Mode 1 : OMNI ON , POLY Mode 2 : OMNI ON ,MONO o: Yes
Mode 3 : OMNI OFF, POLY Mode 4 : OMNI OFF,MONO x: No

■ MIDI DATA FORMAT

Many MIDI messages listed in the MIDI Data Format are expressed in decimal numbers, binary numbers and hexadecimal numbers. Hexadecimal numbers may include the letter “H” as a suffix. Also, “n” can freely be defined as any whole number.
To enter data/values, refer to the table below.

Decimal	Hexadecimal	Binary
0	00	0000 0000
1	01	0000 0001
2	02	0000 0010
3	03	0000 0011
4	04	0000 0100
5	05	0000 0101
6	06	0000 0110
7	07	0000 0111
8	08	0000 1000
9	09	0000 1001
10	0A	0000 1010
11	0B	0000 1011
12	0C	0000 1100
13	0D	0000 1101
14	0E	0000 1110
15	0F	0000 1111
16	10	0001 0000
17	11	0001 0001
18	12	0001 0010
19	13	0001 0011
20	14	0001 0100
21	15	0001 0101
22	16	0001 0110
23	17	0001 0111
24	18	0001 1000
25	19	0001 1001
26	1A	0001 1010
27	1B	0001 1011
28	1C	0001 1100
29	1D	0001 1101
30	1E	0001 1110
31	1F	0001 1111

Decimal	Hexadecimal	Binary
32	20	0010 0000
33	21	0010 0001
34	22	0010 0010
35	23	0010 0011
36	24	0010 0100
37	25	0010 0101
38	26	0010 0110
39	27	0010 0111
40	28	0010 1000
41	29	0010 1001
42	2A	0010 1010
43	2B	0010 1011
44	2C	0010 1100
45	2D	0010 1101
46	2E	0010 1110
47	2F	0010 1111
48	30	0011 0000
49	31	0011 0001
50	32	0011 0010
51	33	0011 0011
52	34	0011 0100
53	35	0011 0101
54	36	0011 0110
55	37	0011 0111
56	38	0011 1000
57	39	0011 1001
58	3A	0011 1010
59	3B	0011 1011
60	3C	0011 1100
61	3D	0011 1101
62	3E	0011 1110
63	3F	0011 1111

Decimal	Hexadecimal	Binary
64	40	0100 0000
65	41	0100 0001
66	42	0100 0010
67	43	0100 0011
68	44	0100 0100
69	45	0100 0101
70	46	0100 0110
71	47	0100 0111
72	48	0100 1000
73	49	0100 1001
74	4A	0100 1010
75	4B	0100 1011
76	4C	0100 1100
77	4D	0100 1101
78	4E	0100 1110
79	4F	0100 1111
80	50	0101 0000
81	51	0101 0001
82	52	0101 0010
83	53	0101 0011
84	54	0101 0100
85	55	0101 0101
86	56	0101 0110
87	57	0101 0111
88	58	0101 1000
89	59	0101 1001
90	5A	0101 1010
91	5B	0101 1011
92	5C	0101 1100
93	5D	0101 1101
94	5E	0101 1110
95	5F	0101 1111

Decimal	Hexadecimal	Binary
96	60	0110 0000
97	61	0110 0001
98	62	0110 0010
99	63	0110 0011
100	64	0110 0100
101	65	0110 0101
102	66	0110 0110
103	67	0110 0111
104	68	0110 1000
105	69	0110 1001
106	6A	0110 1010
107	6B	0110 1011
108	6C	0110 1100
109	6D	0110 1101
110	6E	0110 1110
111	6F	0110 1111
112	70	0111 0000
113	71	0111 0001
114	72	0111 0010
115	73	0111 0011
116	74	0111 0100
117	75	0111 0101
118	76	0111 0110
119	77	0111 0111
120	78	0111 1000
121	79	0111 1001
122	7A	0111 1010
123	7B	0111 1011
124	7C	0111 1100
125	7D	0111 1101
126	7E	0111 1110
127	7F	0111 1111

- Except the table above, for example 144-159(decimal)/9nH/1001 0000-1001 1111(binary) denotes the Note On Message for each channel (1-16). 176-191/BnH/1011 0000-1011 1111 denotes the Control Change Message for each channel (1-16). 192-207/CnH/1100 0000-1100 1111 denotes the Program Change Message for each channel (1-16). 240/FOH/1111 0000 denotes the start of a System Exclusive Message. 247/F7H/1111 0111 denotes the end of a System Exclusive Message.
- aaH (hexidecimal)/0aaaaaaa (binary) denotes the data address. The address contains High, Mid, and Low.
- bbH/0bbbbbbb denotes the byte count.
- ccH/0ccccccc denotes the check sum.
- ddH/0ddddddd denotes the data/value.

O: available

	CPV-209	CPV-207	CPV-205	CPV-203
Regular Voice	O	O	O	O
Organ (Organ Flutes) Voice	O	O	-	-
Mic	O	O	O	-
Vocal Harmony	O	O	-	-
Natural Voice	O	O	O	O
M. Pad (Multi Pad)	-	-	-	-

MIDI CHANNEL MESSAGE (1)

O: available

MIDI Events	Status byte		1st Data byte			2nd Data byte			Corresponding Voice/Part			MIDI Reception (respond/ignore)					MIDI Transmission (generated data)					
	Status		Data	(HEX)	Parameter	Data	(HEX)	Parameter	Regular/ Organ Voice	Mic/Vocal Harmony	Natural Voice	Song	Main Layer Left	Keyboard	Style	Extra	Panel (main generation method)	Upper Lower	M.Pad	Style	Song	MIDI
Key Off	8nH	(n:Channel Number)	kk		Key no. (0~127)	vv		Velocity (0~127)	O	O (Harmony Channel/ Melody Channel)	O	O	O	O	O	O	X	X	X	X	O	X
Key On	9nH	(n:Channel Number)	kk		Key no. (0~127)	vv		Key On: vv=1~127 Key Off: vv=0	O	O (Harmony Channel/ Melody Channel)	O	O	O	O	O	O	O (Keyboard)	O	O	O	O	X
Control Change	BnH	(n:Channel Number)	0	(00H)	Bank Select MSB	0 64 126 127	(00H) (40H) (7EH) (7FH)	Normal SFX voice SFX kit Drum kit	O	X	O	O	O	O (Main)	O	O	O (Voice)	X	O	O	O	X
			1	(01H)	Modulation	0~127	(00H...7FH)	Data	O	X	X	O	O	O (Main/ Layer/Left)	O	O	O (Pedal)	O	O	O	O	X
			5	(05H)	Portamento Time	0~127	(00H...7FH)	Data	O	X	X	O	O	O (Main/ Layer/Left)	X	O	O (Mixing Console)	X	O	X	O	X
			6	(06H)	Data Entry MSB	0~127	(00H...7FH)	Data	O	O (Harmony Channel/ Melody Channel)	O	O	O	O (Main/ Layer/Left)	O	O	O (Mixing Console)	X	O	O	O	X
			7	(07H)	Main Volume	0~127	(00H...7FH)	Data	O	X	O	O	O	O (Main/ Layer/Left)	O	O	O (Mixing Console)	X	O	O	O	X
			10	(0AH)	Panpot	0~127	(00H...7FH)	L64...C...R63	O	X	O	O	O	O (Main/ Layer/Left)	O	O	O (Mixing Console)	X	O	O	O	X
			11	(0BH)	Expression	0~127	(00H...7FH)	Data	O	X	O	O	O	O (Main/ Layer/Left)	O	O	O (Pedal)	O	O	O	O	X
			32	(20H)	Bank Select LSB	0~127	(00H...7FH)	Data	O	X	O	O	O	O (Main)	O	O	O (Voice)	X	O	O	O	X
			38	(26H)	Data Entry LSB	0~127	(00H...7FH)	Data	O	O (Harmony Channel/ Melody Channel)	O	O	O	O (Main/ Layer/Left)	X	O	O (Mixing Console)	X	O	X	O	X
			64	(40H)	Sustain (Damper)	0~127	(00H...7FH)	Data	O	O (Harmony Channel/ Melody Channel)	O	O	O	O (Main/ Layer/Left)	X	O	O (Pedal)	O	O	X	O	X
			65	(41H)	Portamento	0~127	(00H...7FH)	0...63, 64...127 (OFF, ON)	O	X	X	O	O	O (Main/ Layer/Left)	X	O	O (Poly/Mono Sw)	O	O	X	O	X
			66	(42H)	Sostenuto	0~127	(00H...7FH)	0...63, 64...127 (OFF, ON)	O	X	O	O	O	O (Main/ Layer/Left)	X	O	O (Pedal)	O	O	X	O	X
			67	(43H)	Soft Pedal	0~127	(00H...7FH)	0...63, 64...127 (OFF, ON)	O	X	O	O	O	O (Main/ Layer/Left)	X	O	O (Pedal)	O	O	X	O	X
			71	(47H)	Harmonic Content	0~127	(00H...7FH)	-64...0...+63	O	X	X	O	O	O (Main/ Layer/Left)	O	O	O (Mixing Console)	X	O	O	O	X
			72	(48H)	Release Time	0~127	(00H...7FH)	-64...0...+63	O	X	X	O	O	O (Main/ Layer/Left)	O	O	O (Sound Creator)	X	O	O	O	X
			73	(49H)	Attack Time	0~127	(00H...7FH)	-64...0...+63	O	X	X	O	O	O (Main/ Layer/Left)	O	O	O (Sound Creator)	X	O	O	O	X
			74	(4AH)	Brightness	0~127	(00H...7FH)	-64...0...+63	O	X	X	O	O	O (Main/ Layer/Left)	X	O	O (Sound Creator)	X	O	O	O	X
			84	(54H)	Portamento Control	0~127	(00H...7FH)	Key no. (0~127)	O	X	X	O	O	X	O	O	O (Auto Accom-paniment)	X	O	X	O	X
			91	(5BH)	Effect1 Depth (Reverb Send Level)	0~127	(00H...7FH)	Data	O	X	O	O	O	O (Main/ Layer/Left)	O	O	O (Mixing Console)	X	O	O	O	X
			93	(5DH)	Effect3 Depth (Chorus Send Level)	0~127	(00H...7FH)	Data	O	X	O	O	O	O (Main/ Layer/Left)	O	O	O (Mixing Console)	X	O	O	O	X
			94	(5EH)	Effect4 Depth (Variation Send Level)	0~127	(00H...7FH)	Data	O	X	X	O	O	O (Main/ Layer/Left)	O	O	O (Mixing Console)	X	O	O	O	X
			96	(60H)	RPN Increment	-	-	*1	O	O (Harmony Channel/ Melody Channel)	O	O	O	X	O	O	X	X	O	X	O	X
			97	(61H)	RPN Decrement	-	-	*1	O	O (Harmony Channel/ Melody Channel)	O	O	O	X	O	O	X	X	O	X	O	X
			98	(62H)	NRPN LSB	0~127	(00H...7FH)	Data	O	O (Harmony Channel/ Melody Channel)	X	O	O	X	O	O	O (Sound Creator)	X	O	O	O	X
			99	(63H)	NRPN MSB	0~127	(00H...7FH)	Data	O	O (Harmony Channel/ Melody Channel)	X	O	O	X	O	O	O (Sound Creator)	X	O	O	O	X
			100	(64H)	RPN LSB	0~127	(00H...7FH)	Data	O	O (Harmony Channel/ Melody Channel)	O	O	O	O (Main/ Layer/Left)	O	O	O (Mixing Console)	X	O	O	O	X
			101	(65H)	RPN MSB	0~127	(00H...7FH)	Data	O	O (Harmony Channel/ Melody Channel)	O	O	O	O (Main/ Layer/Left)	O	O	O (Mixing Console)	X	O	O	O	X
Mode Message	BnH	(n:Channel Number)	120	(78H)	All Sound Off	0	(00H)	Data	O	X	O	O	O	O (Main/ Layer/Left)	O	O	X	X	O	X	O	X
			121	(79H)	Reset All Controllers	0	(00H)	Data	O	X	O	O	X	X	X	X	X	X	O	X	O	X
			123	(7BH)	All Note Off	0	(00H)	Data	O	O (Harmony Channel/ Melody Channel)	O	O	O	O (Main/ Layer/Left)	O	O	X	X	O	X	O	X
			124	(7CH)	Omni Off	0	(00H)	Data	O	X	X	O	X	X	X	X	X	X	O	X	O	X
			125	(7DH)	Omni On	0	(00H)	Data	O	X	X	O	X	X	X	X	X	X	O	X	O	X
			126	(7EH)	Mono	0~16	(00H...10H)	Data	O	X	X	O	X	X	X	X	X	X	O	X	O	X
			127	(7FH)	Poly	0	(00H)	Data	O	X	X	O	X	X	X	X	X	X	O	X	O	X

MIDI Events	Status byte		1st Data byte		2nd Data byte		Corresponding Voice/Part			MIDI Reception (respond/ignore)					MIDI Transmission (generated data)					
	Status		Data (HEX)	Parameter	Data (HEX)	Parameter	Regular/ Organ Voice	Mic/Vocal Harmony	Natural Voice	Song	Main Layer Left	Keyboard	Style	Extra	Panel (main generation method)	Upper Lower	M.Pad	Style	Song	MIDI
Program Change	CnH	(n:Channel Number)	pp (00H...7FH)	Voice Number (0~127)	- -	-	O	X	O	O	O	O (Main)	O	O	O (Voice)	X	O	O	O	X
Channel After Touch	DnH	(n:Channel Number)	vv (00H...7FH)	Data	- -	-	O	X	X	O	O	O (Main/ Layer/Left)	X	O	X	X	O	X	O	X
Polyphonic After Touch	AnH	(n:Channel Number)	kk (00H...7FH)	Key no. (0~127)	vv (00H...7FH)	Data	X	X	X	X	X	X	X	X	X	X	X	X	O	X
Pitch Bend Change	EnH	(n:Channel Number)	cc (00H...7FH)	LSB	dd (00H...7FH)	MSB	O	O (Harmony Channel/ Melody Channel)	O	O	O	O (Main/ Layer/Left)	O	O	O (Pedal)	O	O	O	O	X
Realtime Message	F8H	MIDI Clock	-	-	-	-	-	-	-	O (*2)					O (*3)					
	FAH	Start	-	-	-	-	-	-	-	O (*2)					O (*4)					
	FBH	Continue	-	-	-	-	-	-	-	X					X					
	FCH	Stop	-	-	-	-	-	-	-	O (*2)					O (*4)					
	FEH	Active Sens	-	-	-	-	-	-	-	O					O					
	FFH	System Reset	-	-	-	-	-	-	-	X					X					

*1 The data byte is ignored.
*2 Received when the Clock is set to External.
*3 Transmitted when the Clock is set to Internal and Transmit Clock is set to on.
*4 Transmitted when the Transmit Clock is set to on.

About Mic/Vocal Harmony column:
The relevant parameters are received by the song part designated by the Effect's Harmony Channel Parameter or Melody Parameter.

MIDI CHANNEL MESSAGE (2)

NRPN

NRPN		Data Entry		Parameter	Data Range	Corresponding Voice/Part			MIDI Reception (respond/ignore)					MIDI Transmission (generated data)					
MSB	LSB	MSB	LSB			Regular/ Organ Voice	Mic/Vocal Harmony	Natural Voice	Song	Main Layer Left	Keyboard	Style	Extra	Panel (main generation method)	Upper Lower	M.Pad	Style	Song	MIDI
01H	08H	mmH	--	Vibrato Rate	mm: 00H-40H-7FH (-64...0...+63)	O	O (Harmony Channel/ Melody Channel)	X	O	O	X	O	O	O (Sound Creator)	X	O	O	O	X
01H	09H	mmH	--	Vibrato Depth	mm: 00H-40H-7FH (-64...0...+63)	O	O (Harmony Channel/ Melody Channel)	X	O	O	X	O	O	O (Sound Creator)	X	O	O	O	X
01H	0AH	mmH	--	Vibrato Delay	mm: 00H-40H-7FH (-64...0...+63)	O	O (Harmony Channel/ Melody Channel)	X	O	O	X	O	O	O (Sound Creator)	X	O	O	O	X
01H	20H	mmH	--	Low Pass Filter Cutoff Frequency	mm: 00H-40H-7FH (-64...0...+63)	O	X	X	O	X	X	O	X	X	X	O	X	O	X
01H	21H	mmH	--	Low Pass Filter Resonance	mm: 00H-40H-7FH (-64...0...+63)	O	X	X	O	X	X	O	X	X	X	O	X	O	X
01H	30H	mmH	--	EQ BASS (*1)	mm: 00H-40H-7FH (-64...0...+63)	O	X	X	O	X	X	O	X	X	X	X	X	O	X
01H	31H	mmH	--	EQ TREBLE (*1)	mm: 00H-40H-7FH (-64...0...+63)	O	X	X	O	X	X	O	X	X	X	X	X	O	X
01H	34H	mmH	--	EQ BASS Frequency (*1)	mm: 04H-28H (32...2.0k[Hz])	O	X	X	O	X	X	X	X	X	X	X	X	O	X
01H	35H	mmH	--	EQ TREBLE Frequency (*1)	mm: 1CH-3AH (500...16.0k[Hz])	O	X	X	O	X	X	X	X	X	X	X	X	O	X
01H	63H	mmH	--	EG Attack Time	mm: 00H-40H-7FH (-64...0...+63)	O	X	X	O	X	X	O	X	X	X	X	X	O	X
01H	64H	mmH	--	EG Decay Time	mm: 00H-40H-7FH (-64...0...+63)	O	X	X	O	O	X	O	O	O (Sound Creator)	X	O	O	O	X
01H	66H	mmH	--	EG Release	mm: 00H-40H-7FH (-64...0...+63)	O	X	X	O	X	X	O	X	X	X	O	X	O	X
14H	rrH	mmH	--	Drum Low Pass Filter Cutoff Frequency	rr: drum instrument note number mm: 00H-40H-7FH (-64...0...+63)	O (Drum Only)	X	X	O	X	X	X	X	X	X	X	O	O	X
15H	rrH	mmH	--	Drum Low Pass Filter Resonance	rr: drum instrument note number mm: 00H-40H-7FH (-64...0...+63)		X	X	O	X	X	X	X	X	X	X	O	O	X
16H	rrH	mmH	--	Drum EG Attack Rate	rr: drum instrument note number mm: 00H-40H-7FH (-64...0...+63)		X	X	O	X	X	X	X	X	X	X	O	O	X
17H	rrH	mmH	--	Drum EG Decay Rate	rr: drum instrument note number mm: 00H-40H-7FH (-64...0...+63)		X	X	O	X	X	X	X	X	X	X	O	O	X
18H	rrH	mmH	--	Drum Pitch Coarse	rr: drum instrument note number mm: 00H-40H-7FH (-64...0...+63)		X	X	O	X	X	X	X	X	X	X	O	O	X
19H	rrH	mmH	--	Drum Pitch Fine	rr: drum instrument note number mm: 00H-40H-7FH (-64...0...+63)		X	X	O	X	X	X	X	X	X	X	O	O	X
1AH	rrH	mmH	--	Drum Level	rr: drum instrument note number mm: 00H-7FH (0...127)		X	X	O	X	X	X	X	X	X	X	O	O	X
1CH	rrH	mmH	--	Drum Pan	rr: drum instrument note number mm: 00H, 01H-40H-7FH (RND, L63...C...R63)		X	X	O	X	X	X	X	X	X	X	O	O	X
1DH	rrH	mmH	--	Drum Reverb Send Level	rr: drum instrument note number mm: 00H-7FH (0...127)		X	X	O	X	X	X	X	X	X	X	O	O	X
1EH	rrH	mmH	--	Drum Chorus Send Level	rr: drum instrument note number mm: 00H-7FH (0...127)		X	X	O	X	X	X	X	X	X	X	O	O	X
1FH	rrH	mmH	--	Drum Variation Send Level	rr: drum instrument note number mm: 00H-7FH (0...127) (Variation Connection=SYSTEM) mm: 00H, 01H-7FH (OFF, ON) (Variation Connection=INSERTION)		X	X	O	X	X	X	X	X	X	X	O	O	X

NRPN MSB: 14H-1FH (for drums) message is accepted as long as the channel is set with a drum voice.
Data Entry LSB: Ignored.

NRPN (Vocal Harmony)

NRPN		Data Entry		Parameter	Data Range	Corresponding Voice/Part			MIDI Reception (respond/ignore)					MIDI Transmission (generated data)					
MSB	LSB	MSB	LSB			Regular/ Organ Voice	Mic/Vocal Harmony	Natural Voice	Song	Main Layer Left	Keyboard	Style	Extra	Panel (main generation method)	Upper Lower	M.Pad	Style	Song	MIDI
00H	00H	mmH	--	Harmony Mute (*2)	0-63, 64-127 (Off, On)	X	O (Harmony Channel)	X	X	X	X	X	X	X	X	X	X	O	X
01H	1AH	mmH	--	Detune Modulation (*2)	mm: 00H-7FH (0...127)	X	O (Harmony Channel)	X	X	X	X	X	X	X	X	X	X	O	X
02H	10H	mmH	--	Harmony1 Volume (*2)	mm: 00H-7FH (0...127)	X	O (Harmony Channel)	X	X	X	X	X	X	O (Vocal Harmony Type Edit)	X	X	X	O	X
02H	11H	mmH	--	Harmony2 Volume (*2)	mm: 00H-7FH (0...127)	X	O (Harmony Channel)	X	X	X	X	X	X	O (Vocal Harmony Type Edit)	X	X	X	O	X
02H	12H	mmH	--	Harmony3 Volume (*2)(*3)	mm: 00H-7FH (0...127)	X	O (Harmony Channel)	X	X	X	X	X	X	O (Vocal Harmony Type Edit)	X	X	X	O	X
02H	20H	mmH	--	Harmony1 Pan (*2)	mm: 00H, 01H-40H-7FH (RND, L63...C...R63)	X	O (Harmony Channel)	X	X	X	X	X	X	O (Vocal Harmony Type Edit)	X	X	X	O	X
02H	21H	mmH	--	Harmony2 Pan (*2)	mm: 00H, 01H-40H-7FH (RND, L63...C...R63)	X	O (Harmony Channel)	X	X	X	X	X	X	O (Vocal Harmony Type Edit)	X	X	X	O	X
02H	22H	mmH	--	Harmony3 Pan (*2)(*3)	mm: 00H, 01H-40H-7FH (RND, L63...C...R63)	X	O (Harmony Channel)	X	X	X	X	X	X	O (Vocal Harmony Type Edit)	X	X	X	O	X
02H	30H	mmH	--	Harmony1 Detune (*2)	mm: 00H-40H-7FH (-64...0...+63)	X	O (Harmony Channel)	X	X	X	X	X	X	O (Vocal Harmony Type Edit)	X	X	X	O	X
02H	31H	mmH	--	Harmony2 Detune (*2)	mm: 00H-40H-7FH (-64...0...+63)	X	O (Harmony Channel)	X	X	X	X	X	X	O (Vocal Harmony Type Edit)	X	X	X	O	X
02H	32H	mmH	--	Harmony3 Detune (*2)(*3)	mm: 00H-40H-7FH (-64...0...+63)	X	O (Harmony Channel)	X	X	X	X	X	X	O (Vocal Harmony Type Edit)	X	X	X	O	X

Data Entry LSB: Ignored.

RPN

NRPN		Data Entry		Parameter	Data Range	Corresponding Voice/Part			MIDI Reception (respond/ignore)					MIDI Transmission (generated data)					
MSB	LSB	MSB	LSB			Regular/ Organ Voice	Mic/Vocal Harmony	Natural Voice	Song	Main Layer Left	Keyboard	Style	Extra	Panel (main generation method)	Upper Lower	M.Pad	Style	Song	MIDI
00H	00H	mmH	--	Pitch Bend Sensitivity	mm: 00H-18H (0...+24[semitones])	O	O (Harmony Channel/ Melody Channel)	O	O	O	O (Main/ Layer/Left)	O	O	O (Mixing Console)	X	O	O	O	X
00H	01H	mmH	llH	Fine Tune	mm ll : 00H 00H -100[cent] ... mm ll : 40H 00H 0[cent] ... mm ll : 7FH 7FH 100[cent]	O	X	O	O	O	O (Main/ Layer/Left)	O	O	O (Mixing Console)	X	O	O	O	X
00H	02H	mmH	--	Coarse Tune	mm: 28H-40H-58H (-24...0...+24[semitones])	O	X	O	O	O	O (Main/ Layer/Left)	O	O	X	X	O	O	O	X
7FH	7FH	--	--	Null	-	O	O	O	O	O	O (Main/ Layer/Left)	O	O	X	X	O	O	O	X

*1 2Band Part EQ

CVP-203	X
CVP-205	X
CVP-207	O
CVP-209	O

*2 Vocal Harmony

CVP-203	X
CVP-205	X
CVP-207	O
CVP-209	O

*3 CVP-209 only

About Mic/Vocal Harmony column:

The relevant parameters are received by the song part designated by the Effect's Harmony Channel Parameter or Melody Parameter.

MIDI PARAMETER CHANGE TABLE

* Not Received when Receive System Exclusive Message Parameters is set to off.
* Not transmitted when Transmit System Exclusive Message Parmeters is set to on.

MIDI Parameter Change table (XG SYSTEM)

CVP-203	O
CVP-205	O
CVP-207	O
CVP-209	O

O: available

Address (H)			Size (H)	Data (H)	Parameter	Description	XG Default (H)	Corresponding Voice/Part			MIDI Reception (effective or not for each part)					MIDI Transmission (generated data)				
								Regular/ Organ Voice	Mic/Vocal Harmony	Natural Voice	Song	Main Layer Left	Keyboard	Style	Extra	Panel (main generation method)	M.Pad	Style	Song	MIDI
00	00	00	4	00-0F	MASTER TUNE	-102.4...0...+102.3[cent]	*Panel setting value	O	X	O	O					O (Function)	X	X	O	X
		01		00-0F		1st bit 3-0 bit 15-12														
		02		00-0F		2nd bit 3-0 bit 11-8														
		03		00-0F		3rd bit 3-0 bit 7-4														
						4th bit 3-0 bit 3-0														
		04	1	00-7F	MASTER VOLUME	0...127	7F	O	X	O	O	X	X	X	X	X	X	X	O	X
		05	1	00-7F	MASTER ATTENUATOR	0...127	00	X	X	X	X	X	X	X	X	X	X	X	X	X
		06	1	28-58	TRANSPOSE	-24...0...+24[semitones]	40	O	X	O	O	X	X	X	X	X	X	X	O	X
		7D	1	N	DRUM SETUP RESET	N: Drum setup number	-	O (Drum only)	X	X	O	X	X	X	X	X	X	X	O	X
		7E	1	00	XG SYSTEM ON	00=XG system ON	-	O	X	O	O	X	X	X	O	X	X	X	O	X
		7F	1	00	ALL PARAMETER RESET	00=ON	-	O	X	O	O	X	X	X	O	X	X	X	O	X

TOTAL SIZE 07

MIDI Parameter Change table (SYSTEM INFORMATION)

CVP-203	O
CVP-205	O
CVP-207	O
CVP-209	O

Address (H)			Size (H)	Data (H)	Parameter	Description	Corresponding Voice/Part			MIDI Reception (effective or not for each part)					MIDI Transmission (generated data)				
							Regular/ Organ Voice	Mic/Vocal Harmony	Natural Voice	Song	Main Layer Left	Keyboard	Style	Extra	Panel (main generation method)	M.Pad	Style	Song	MIDI
01	00	00	E	20-7F	Model Name 1	32...127(ASCII CHARACTER)	-	-	-	-	-	-	-	-	X	X	X	X	O
		...		...	...	...													
		0D		20-7F	Model Name 14	32...127(ASCII CHARACTER)													
		0E	1		NOT USED														
		0F	1		NOT USED														

TOTAL SIZE 10

Transmitted in response to Dump Request. Not received.

MIDI Parameter Change table (EFFECT1)

CVP-203	O
CVP-205	O
CVP-207	O
CVP-209	O

Address (H)			Size (H)	Data (H)	Parameter	Description	XG Default (H)	Corresponding Voice/Part			MIDI Reception (effective or not for each part)					MIDI Transmission (generated data)				
								Regular/ Organ Voice	Mic/Vocal Harmony	Natural Voice	Song	Main Layer Left	Keyboard	Style	Extra	Panel (main generation method)	M.Pad	Style	Song	MIDI
02	01	00	2	00-7F 00-7F	REVERB TYPE MSB REVERB TYPE LSB	Refer to Effect Parameter List 〃	01(=HALL1) 00	O	O	X	O					O (Mixing Console)	X	O	O	X
		02	1	00-7F	REVERB PARAMETER 1	〃	Depends on Reverb Type	O	O	X	O (*Depends on Reverb Type)					O (Mixing Console)	X	O	O	X
		03	1	00-7F	REVERB PARAMETER 2	〃	Depends on Reverb Type	O	O	X	O (*Depends on Reverb Type)					O (Mixing Console *Depends on Reverb Type)	X	O	O	X
		04	1	00-7F	REVERB PARAMETER 3	〃	Depends on Reverb Type	O	O	X	O (*Depends on Reverb Type)					O (Mixing Console *Depends on Reverb Type)	X	O	O	X
		05	1	00-7F	REVERB PARAMETER 4	〃	Depends on Reverb Type	O	O	X	O (*Depends on Reverb Type)					O (Mixing Console *Depends on Reverb Type)	X	O	O	X
		06	1	00-7F	REVERB PARAMETER 5	〃	Depends on Reverb Type	O	O	X	O (*Depends on Reverb Type)					O (Mixing Console *Depends on Reverb Type)	X	O	O	X
		07	1	00-7F	REVERB PARAMETER 6	〃	Depends on Reverb Type	O	O	X	O (*Depends on Reverb Type)					O (Mixing Console *Depends on Reverb Type)	X	O	O	X
		08	1	00-7F	REVERB PARAMETER 7	〃	Depends on Reverb Type	O	O	X	O (*Depends on Reverb Type)					O (Mixing Console *Depends on Reverb Type)	X	O	O	X
		09	1	00-7F	REVERB PARAMETER 8	〃	Depends on Reverb Type	O	O	X	O (*Depends on Reverb Type)					O (Mixing Console *Depends on Reverb Type)	X	O	O	X
		0A	1	00-7F	REVERB PARAMETER 9	〃	Depends on Reverb Type	O	O	X	O (*Depends on Reverb Type)					O (Mixing Console *Depends on Reverb Type)	X	O	O	X
		0B	1	00-7F	REVERB PARAMETER 10	〃	Depends on Reverb Type	O	O	X	O (*Depends on Reverb Type)					O (Mixing Console *Depends on Reverb Type)	X	O	O	X
		0C	1	00-7F	REVERB RETURN	-∞dB...0dB...+6dB (0...96...127)	40	O	O	X	O					O (Mixing Console)	X	O	O	X
		0D	1	01-7F	REVERB PAN	L63...C...R63	40	O	O	X	O					X	X	O	O	X

TOTAL SIZE 0E

Address (H)			Size (H)	Data (H)	Parameter	Description	XG Default (H)	Corresponding Voice/Part			MIDI Reception (effective or not for each part)					MIDI Transmission (generated data)				
								Regular/ Organ Voice	Mic/Vocal Harmony	Natural Voice	Song	Main Layer Left	Keyboard	Style	Extra	Panel (main generation method)	M.Pad	Style	Song	MIDI
02	01	10	1	00-7F	REVERB PARAMETER 11	Refer to Effect Parameter List	Depends on Reverb Type	O	O	X	O (*Depends on Reverb Type)					O (Mixing Console *Depends on Reverb Type)	X	O	O	X
		11	1	00-7F	REVERB PARAMETER 12	〃	Depends on Reverb Type	O	O	X	O (*Depends on Reverb Type)					O (Mixing Console *Depends on Reverb Type)	X	O	O	X
		12	1	00-7F	REVERB PARAMETER 13	〃	Depends on Reverb Type	O	O	X	O (*Depends on Reverb Type)					O (Mixing Console *Depends on Reverb Type)	X	O	O	X
		13	1	00-7F	REVERB PARAMETER 14	〃	Depends on Reverb Type	O	O	X	O (*Depends on Reverb Type)					O (Mixing Console *Depends on Reverb Type)	X	O	O	X
		14	1	00-7F	REVERB PARAMETER 15	〃	Depends on Reverb Type	O	O	X	O (*Depends on Reverb Type)					O (Mixing Console *Depends on Reverb Type)	X	O	O	X
		15	1	00-7F	REVERB PARAMETER 16	〃	Depends on Reverb Type	O	O	X	O (*Depends on Reverb Type)					O (Mixing Console *Depends on Reverb Type)	X	O	O	X

TOTAL SIZE 06

Address (H)			Size (H)	Data (H)	Parameter	Description	XG Default (H)	Corresponding Voice/Part			MIDI Reception (effective or not for each part)					MIDI Transmission (generated data)				
								Regular/ Organ Voice	Mic/Vocal Harmony	Natural Voice	Song	Main Layer Left	Keyboard	Style	Extra	Panel (main generation method)	M.Pad	Style	Song	MIDI
02	01	20	2	00-7F 00-7F	CHORUS TYPE MSB CHORUS TYPE LSB	Refer to Effect Parameter List 〃	41(=CHORUS1) 00	O	O	X	O					O (Mixing Console)	X	O	O	X
		22	1	00-7F	CHORUS PARAMETER 1	〃	Depends on Chorus Type	O	O	X	O (*Depends on Chorus Type)					O (Mixing Console *Depends on Chorus Type)	X	O	O	X
		23	1	00-7F	CHORUS PARAMETER 2	〃	Depends on Chorus Type	O	O	X	O (*Depends on Chorus Type)					O (Mixing Console *Depends on Chorus Type)	X	O	O	X
		24	1	00-7F	CHORUS PARAMETER 3	〃	Depends on Chorus Type	O	O	X	O (*Depends on Chorus Type)					O (Mixing Console *Depends on Chorus Type)	X	O	O	X
		25	1	00-7F	CHORUS PARAMETER 4	〃	Depends on Chorus Type	O	O	X	O (*Depends on Chorus Type)					O (Mixing Console *Depends on Chorus Type)	X	O	O	X
		26	1	00-7F	CHORUS PARAMETER 5	〃	Depends on Chorus Type	O	O	X	O (*Depends on Chorus Type)					O (Mixing Console *Depends on Chorus Type)	X	O	O	X
		27	1	00-7F	CHORUS PARAMETER 6	〃	Depends on Chorus Type	O	O	X	O (*Depends on Chorus Type)					O (Mixing Console *Depends on Chorus Type)	X	O	O	X
		28	1	00-7F	CHORUS PARAMETER 7	〃	Depends on Chorus Type	O	O	X	O (*Depends on Chorus Type)					O (Mixing Console *Depends on Chorus Type)	X	O	O	X
		29	1	00-7F	CHORUS PARAMETER 8	〃	Depends on Chorus Type	O	O	X	O (*Depends on Chorus Type)					O (Mixing Console *Depends on Chorus Type)	X	O	O	X
		2A	1	00-7F	CHORUS PARAMETER 9	〃	Depends on Chorus Type	O	O	X	O (*Depends on Chorus Type)					O (Mixing Console *Depends on Chorus Type)	X	O	O	X
		2B	1	00-7F	CHORUS PARAMETER 10	〃	Depends on Chorus Type	O	O	X	O (*Depends on Chorus Type)					O (Mixing Console *Depends on Chorus Type)	X	O	O	X
		2C	1	00-7F	CHORUS RETURN	-∞dB...0dB...+6dB (0...96...127)	40	O	O	X	O					O (Mixing Console)	X	O	O	X
		2D	1	01-7F	CHORUS PAN	L63...C...R63	40	O	O	X	O					X	X	O	O	X
		2E	1	00-7F	SEND CHORUS TO REVERB	-∞dB...0dB...+6dB (0...96...127)	00	O	O	X	O					X	X	O	O	X
TOTAL SIZE			0F																	
02	01	30	1	00-7F	CHORUS PARAMETER 11	Refer to Effect Parameter List	Depends on Chorus Type	O	O	X	O (*Depends on Chorus Type)					O (Mixing Console *Depends on Chorus Type)	X	O	O	X
		31	1	00-7F	CHORUS PARAMETER 12	〃	Depends on Chorus Type	O	O	X	O (*Depends on Chorus Type)					O (Mixing Console *Depends on Chorus Type)	X	O	O	X
		32	1	00-7F	CHORUS PARAMETER 13	〃	Depends on Chorus Type	O	O	X	O (*Depends on Chorus Type)					O (Mixing Console *Depends on Chorus Type)	X	O	O	X
		33	1	00-7F	CHORUS PARAMETER 14	〃	Depends on Chorus Type	O	O	X	O (*Depends on Chorus Type)					O (Mixing Console *Depends on Chorus Type)	X	O	O	X
		34	1	00-7F	CHORUS PARAMETER 15	〃	Depends on Chorus Type	O	O	X	O (*Depends on Chorus Type)					O (Mixing Console *Depends on Chorus Type)	X	O	O	X
		35	1	00-7F	CHORUS PARAMETER 16	〃	Depends on Chorus Type	O	O	X	O (*Depends on Chorus Type)					O (Mixing Console *Depends on Chorus Type)	X	O	O	X
TOTAL SIZE			06																	

Address (H)			Size (H)	Data (H)	Parameter	Description	XG Default (H)	Corresponding Voice/Part			MIDI Reception (effective or not for each part)					MIDI Transmission (generated data)				
								Regular/ Organ Voice	Mic/Vocal Harmony	Natural Voice	Song	Main Layer Left	Keyboard	Style	Extra	Panel (main generation method)	M.Pad	Style	Song	MIDI
02	01	40	2	00-7F 00-7F	VARIATION TYPE MSB VARIATION TYPE LSB	Refer to Effect Parameter List 〃	05(=DELAY L, C, R) 00	O	O	X	O					O (Mixing Console)	X	O	O	X
		42	2	00-7F 00-7F	VARIATION PARAMETER 1 MSB VARIATION PARAMETER 1 LSB	〃 〃	Depends on Variation Type	O	O	X	O (*Depends on Variation Type)					O (Mixing Console *Depends on Variation Type)	X	O	O	X
		44	2	00-7F 00-7F	VARIATION PARAMETER 2 MSB VARIATION PARAMETER 2 LSB	〃 〃	Depends on Variation Type	O	O	X	O (*Depends on Variation Type)					O (Mixing Console *Depends on Variation Type)	X	O	O	X
		46	2	00-7F 00-7F	VARIATION PARAMETER 3 MSB VARIATION PARAMETER 3 LSB	〃 〃	Depends on Variation Type	O	O	X	O (*Depends on Variation Type)					O (Mixing Console *Depends on Variation Type)	X	O	O	X
		48	2	00-7F 00-7F	VARIATION PARAMETER 4 MSB VARIATION PARAMETER 4 LSB	〃 〃	Depends on Variation Type	O	O	X	O (*Depends on Variation Type)					O (Mixing Console *Depends on Variation Type)	X	O	O	X
		4A	2	00-7F 00-7F	VARIATION PARAMETER 5 MSB VARIATION PARAMETER 5 LSB	〃 〃	Depends on Variation Type	O	O	X	O (*Depends on Variation Type)					O (Mixing Console *Depends on Variation Type)	X	O	O	X
		4C	2	00-7F 00-7F	VARIATION PARAMETER 6 MSB VARIATION PARAMETER 6 LSB	〃 〃	Depends on Variation Type	O	O	X	O (*Depends on Variation Type)					O (Mixing Console *Depends on Variation Type)	X	O	O	X
		4E	2	00-7F 00-7F	VARIATION PARAMETER 7 MSB VARIATION PARAMETER 7 LSB	〃 〃	Depends on Variation Type	O	O	X	O (*Depends on Variation Type)					O (Mixing Console *Depends on Variation Type)	X	O	O	X
		50	2	00-7F 00-7F	VARIATION PARAMETER 8 MSB VARIATION PARAMETER 8 LSB	〃 〃	Depends on Variation Type	O	O	X	O (*Depends on Variation Type)					O (Mixing Console *Depends on Variation Type)	X	O	O	X

Address (H)			Size (H)	Data (H)	Parameter	Description	XG Default (H)	Corresponding Voice/Part			MIDI Reception (effective or not for each part)					MIDI Transmission (generated data)				
								Regular/ Organ Voice	Mic/Vocal Harmony	Natural Voice	Song	Main Layer Left	Keyboard	Style	Extra	Panel (main generation method)	M.Pad	Style	Song	MIDI
		52	2	00-7F 00-7F	VARIATION PARAMETER 9 MSB VARIATION PARAMETER 9 LSB	˝ ˝	Depends on Variation Type	O	O	X	O (*Depends on Variation Type)					O (Mixing Console *Depends on Variation Type)	X	O	O	X
		54	2	00-7F 00-7F	VARIATION PARAMETER 10 MSB VARIATION PARAMETER 10 LSB	˝ ˝	Depends on Variation Type	O	O	X	O (*Depends on Variation Type)					O (Mixing Console *Depends on Variation Type)	X	O	O	X
		56	1	00-7F	VARIATION RETURN	-∞dB...0dB...+6dB (0...96...127)	40	O	O	X	O					O (Mixing Console)	X	O	O	X
		57	1	00-7F	VARIATION PAN	L63...C...R63	40	O	O	X	O					X	X	O	O	X
		58	1	00-7F	SEND VARIATION TO REVERB	-∞dB...0dB...+6dB (0...96...127)	00	O	O	X	O					X	X	O	O	X
		59	1	00-7F	SEND VARIATION TO CHORUS	-∞dB...0dB...+6dB (0...96...127)	00	O	O	X	O					X	X	O	O	X
		5A	1	00-7F	VARIATION CONNECTION	INSERTION, SYSTEM	00	O	O	X	O					X	X	O	O	X
		5B	1	00-7F	VARIATION PART NUMBER	Reception: Part1...16(0...15) Transmission: Part1...16(0...15) AD(64) OFF(127)	7F	O	O	X	O					O (Mixing Console)	X	O	O	X
		5C	1	00-7F	MW VARIATION CONTROL DEPTH	-64...0...+63	40	O	O	X	O					X	X	O	O	X
		5D	1	00-7F	BEND VARIATION CONTROL DEPTH	-64...0...+63	40	O	O	X	O					X	X	O	O	X
		5E	1	00-7F	CAT VARIATION CONTROL DEPTH	-64...0...+63	40	O	O	X	O					X	X	O	O	X
		5F	1	00-7F	AC1 VARIATION CONTROL DEPTH	-64...0...+63	40	X	X	X	X					X	X	X	X	X
		60	1	01-7F	AC2 VARIATION CONTROL DEPTH	-64...0...+63	40	X	X	X	X					X	X	X	X	X

TOTAL SIZE 21

02	01	70	1	00-7F	VARIATION PARAMETER 11	Refer to Effect Parameter List	Depends on Variation Type	O	O	X	O (*Depends on Variation Type)					O (Mixing Console *Depends on Variation Type)	X	O	O	X
		71	1	00-7F	VARIATION PARAMETER 12	˝	Depends on Variation Type	O	O	X	O (*Depends on Variation Type)					O (Mixing Console *Depends on Variation Type)	X	O	O	X
		72	1	00-7F	VARIATION PARAMETER 13	˝	Depends on Variation Type	O	O	X	O (*Depends on Variation Type)					O (Mixing Console *Depends on Variation Type)	X	O	O	X
		73	1	00-7F	VARIATION PARAMETER 14	˝	Depends on Variation Type	O	O	X	O (*Depends on Variation Type)					O (Mixing Console *Depends on Variation Type)	X	O	O	X
		74	1	00-7F	VARIATION PARAMETER 15	˝	Depends on Variation Type	O	O	X	O (*Depends on Variation Type)					O (Mixing Console *Depends on Variation Type)	X	O	O	X
		75	1	00-7F	VARIATION PARAMETER 16	˝	Depends on Variation Type	O	O	X	O (*Depends on Variation Type)					O (Mixing Console *Depends on Variation Type)	X	O	O	X

TOTAL SIZE 06

MIDI Parameter Change table (MULTI EQ)

CVP-203	X
CVP-205	X
CVP-207	O
CVP-209	O

Address (H)			Size (H)	Data (H)	Parameter	Description	Corresponding Voice/Part			MIDI Reception (effective or not for each part)					MIDI Transmission (generated data)				
							Regular/ Organ Voice	Mic/Vocal Harmony	Natural Voice	Song	Main Layer Left	Keyboard	Style	Extra	Panel (main generation method)	M.Pad	Style	Song	MIDI
02	40	00	1	00-04	EQ TYPE	flat, jazz, pops, rock, classic	O	O	X	O					X	X	X	O	X
		01	1	34-4C	EQ GAIN1	-12...0...+12[dB]	O	O	X	O					O (Mixing Console)	X	X	O	X
		02	1	04-28	EQ FREQUENCY1	32...2.0k[Hz]	O	O	X	O					O (Mixing Console)	X	X	O	X
		03	1	01-78	EQ Q1	0.1...12.0	O	O	X	O					O (Mixing Console)	X	X	O	X
		04	1	00-01	EQ SHAPE1	shelving, peaking	O	O	X	O					X	X	X	O	X
		05	1	34-4C	EQ GAIN2	-12...0...+12[dB]	O	O	X	O					O (Mixing Console)	X	X	O	X
		06	1	0E-36	EQ FREQUENCY2	100...10.0k[Hz]	O	O	X	O					O (Mixing Console)	X	X	O	X
		07	1	01-78	EQ Q2	0.1...12.0	O	O	X	O					O (Mixing Console)	X	X	O	X
		08	1		NOT USED		-	-	-	-					-	-	-	-	-
		09	1	34-4C	EQ GAIN3	-12...0...+12[dB]	O	O	X	O					O (Mixing Console)	X	X	O	X
		0A	1	0E-36	EQ FREQUENCY3	100...10.0k[Hz]	O	O	X	O					O (Mixing Console)	X	X	O	X
		0B	1	01-78	EQ Q3	0.1...12.0	O	O	X	O					O (Mixing Console)	X	X	O	X
		0C	1		NOT USED		-	-	-	-					-	-	-	-	-
		0D	1	34-4C	EQ GAIN4	-12...0...+12[dB]	O	O	X	O					O (Mixing Console)	X	X	O	X
		0E	1	0E-36	EQ FREQUENCY4	100...10.0k[Hz]	O	O	X	O					O (Mixing Console)	X	X	O	X
		0F	1	01-78	EQ Q4	0.1...12.0	O	O	X	O					O (Mixing Console)	X	X	O	X
		10	1		NOT USED		-	-	-	-					-	-	-	-	-
		11	1	34-4C	EQ GAIN5	-12...0...+12[dB]	O	O	X	O					O (Mixing Console)	X	X	O	X
		12	1	1C-3A	EQ FREQUENCY5	0.5k...16.0k[Hz]	O	O	X	O					O (Mixing Console)	X	X	O	X
		13	1	01-78	EQ Q5	0.1...12.0	O	O	X	O					O (Mixing Console)	X	X	O	X
		14	1	00-01	EQ SHAPE5	shelving, peaking	O	O	X	O					X	X	X	O	X

TOTAL SIZE 05

The MULTI EQ Parameter cannot be reset to its factory setting with XG SYSTEM ON.

MIDI Parameter Change table (EFFECT2)

CVP-203	X
CVP-205	X
CVP-207	O
CVP-209	O

Address (H)			Size (H)	Data (H)	Parameter	Description	Corresponding Voice/Part			MIDI Reception (effective or not for each part)					MIDI Transmission (generated data)				
							Regular/ Organ Voice	Mic/Vocal Harmony	Natural Voice	Song	Main Layer Left	Keyboard	Style	Extra	Panel (main generation method)	M.Pad	Style	Song	MIDI
03	n	00	2	00-7F 00-7F	INSERTION EFFECT TYPE MSB INSERTION EFFECT TYPE LSB	Refer to Effect Parameter List 〃	O	O	X	O					O (Mixing Console)	X	X	O	X
		02	1	00-7F	INSERTION EFFECT PARAMETER 1	〃	O	O	X	O (*Depends on Insertion Type)					O (Mixing Console *Depends on Insertion Type)	X	X	O	X
		03	1	00-7F	INSERTION EFFECT PARAMETER 2	〃	O	O	X	O (*Depends on Insertion Type)					O (Mixing Console *Depends on Insertion Type)	X	X	O	X
		04	1	00-7F	INSERTION EFFECT PARAMETER 3	〃	O	O	X	O (*Depends on Insertion Type)					O (Mixing Console *Depends on Insertion Type)	X	X	O	X
		05	1	00-7F	INSERTION EFFECT PARAMETER 4	〃	O	O	X	O (*Depends on Insertion Type)					O (Mixing Console *Depends on Insertion Type)	X	X	O	X
		06	1	00-7F	INSERTION EFFECT PARAMETER 5	〃	O	O	X	O (*Depends on Insertion Type)					O (Mixing Console *Depends on Insertion Type)	X	X	O	X
		07	1	00-7F	INSERTION EFFECT PARAMETER 6	〃	O	O	X	O (*Depends on Insertion Type)					O (Mixing Console *Depends on Insertion Type)	X	X	O	X
		08	1	00-7F	INSERTION EFFECT PARAMETER 7	〃	O	O	X	O (*Depends on Insertion Type)					O (Mixing Console *Depends on Insertion Type)	X	X	O	X
		09	1	00-7F	INSERTION EFFECT PARAMETER 8	〃	O	O	X	O (*Depends on Insertion Type)					O (Mixing Console *Depends on Insertion Type)	X	X	O	X
		0A	1	00-7F	INSERTION EFFECT PARAMETER 9	〃	O	O	X	O (*Depends on Insertion Type)					O (Mixing Console *Depends on Insertion Type)	X	X	O	X
		0B	1	00-7F	INSERTION EFFECT PARAMETER 10	〃	O	O	X	O (*Depends on Insertion Type)					O (Mixing Console *Depends on Insertion Type)	X	X	O	X
		0C	1	00-7F	INSERTION EFFECT PART NUMBER	Reception: Part1...16(0...15) Transmission: Part1...16(0...15) AD(64) OFF(127)	O	O	X	O					O (Mixing Console)	X	X	O	X
		0D	1	00-7F	MW INSERTION CONTROL DEPTH	-64...0...+63	O	O	X	O					X	X	X	O	X
		0E	1	00-7F	BEND INSERTION CONTROL DEPTH	-64...0...+63	O	O	X	O					X	X	X	O	X
		0F	1	00-7F	CAT INSERTION CONTROL DEPTH	-64...0...+63	O	O	X	O					X	X	X	O	X
		10	1	00-7F	AC1 INSERTION CONTROL DEPTH	-64...0...+63	X	X	X	X					X	X	X	X	X
		11	1	00-7F	AC2 INSERTION CONTROL DEPTH	-64...0...+63	X	X	X	X					X	X	X	X	X
TOTAL SIZE			12																

		20	1	00-7F	INSERTION EFFECT PARAMETER 11	Refer to Effect Parameter List	O	O	X	O (*Depends on Insertion Type)					O (Mixing Console *Depends on Insertion Type)	X	X	O	X
		21	1	00-7F	INSERTION EFFECT PARAMETER 12	〃	O	O	X	O (*Depends on Insertion Type)					O (Mixing Console *Depends on Insertion Type)	X	X	O	X
		22	1	00-7F	INSERTION EFFECT PARAMETER 13	〃	O	O	X	O (*Depends on Insertion Type)					O (Mixing Console *Depends on Insertion Type)	X	X	O	X
		23	1	00-7F	INSERTION EFFECT PARAMETER 14	〃	O	O	X	O (*Depends on Insertion Type)					O (Mixing Console *Depends on Insertion Type)	X	X	O	X
		24	1	00-7F	INSERTION EFFECT PARAMETER 15	〃	O	O	X	O (*Depends on Insertion Type)					O (Mixing Console *Depends on Insertion Type)	X	X	O	X
		25	1	00-7F	INSERTION EFFECT PARAMETER 16	〃	O	O	X	O (*Depends on Insertion Type)					O (Mixing Console *Depends on Insertion Type)	X	X	O	X
TOTAL SIZE			6																

Address (H)			Size (H)	Data (H)	Parameter	Description	Corresponding Voice/Part			MIDI Reception (effective or not for each part)					MIDI Transmission (generated data)				
							Regular/ Organ Voice	Mic/Vocal Harmony	Natural Voice	Song	Main Layer Left	Keyboard	Style	Extra	Panel (main generation method)	M.Pad	Style	Song	MIDI
		30	2	00-7F 00-7F	INSERTION EFFECT PARAMETER 1 MSB INSERTION EFFECT PARAMETER 1 LSB	Refer to Effect Parameter List 〃	O	O	X	O (*Depends on Insertion Type)					O (Mixing Console *Depends on Insertion Type)	X	X	O	X
		32	2	00-7F 00-7F	INSERTION EFFECT PARAMETER 2 MSB INSERTION EFFECT PARAMETER 2 LSB	〃 〃	O	O	X	O (*Depends on Insertion Type)					O (Mixing Console *Depends on Insertion Type)	X	X	O	X
		34	2	00-7F 00-7F	INSERTION EFFECT PARAMETER 3 MSB INSERTION EFFECT PARAMETER 3 LSB	〃 〃	O	O	X	O (*Depends on Insertion Type)					O (Mixing Console *Depends on Insertion Type)	X	X	O	X
		36	2	00-7F 00-7F	INSERTION EFFECT PARAMETER 4 MSB INSERTION EFFECT PARAMETER 4 LSB	〃 〃	O	O	X	O (*Depends on Insertion Type)					O (Mixing Console *Depends on Insertion Type)	X	X	O	X
		38	2	00-7F 00-7F	INSERTION EFFECT PARAMETER 5 MSB INSERTION EFFECT PARAMETER 5 LSB	〃 〃	O	O	X	O (*Depends on Insertion Type)					O (Mixing Console *Depends on Insertion Type)	X	X	O	X
		3A	2	00-7F 00-7F	INSERTION EFFECT PARAMETER 6 MSB INSERTION EFFECT PARAMETER 6 LSB	〃 〃	O	O	X	O (*Depends on Insertion Type)					O (Mixing Console *Depends on Insertion Type)	X	X	O	X
		3C	2	00-7F 00-7F	INSERTION EFFECT PARAMETER 7 MSB INSERTION EFFECT PARAMETER 7 LSB	〃 〃	O	O	X	O (*Depends on Insertion Type)					O (Mixing Console *Depends on Insertion Type)	X	X	O	X
		3E	2	00-7F 00-7F	INSERTION EFFECT PARAMETER 8 MSB INSERTION EFFECT PARAMETER 8	〃 〃	O	O	X	O (*Depends on Insertion Type)					O (Mixing Console *Depends on Insertion Type)	X	X	O	X
		40	2	00-7F 00-7F	LSBINSERTION EFFECT PARAMETER 9 MSB INSERTION EFFECT PARAMETER 9 LSB	〃 〃	O	O	X	O (*Depends on Insertion Type)					O (Mixing Console *Depends on Insertion Type)	X	X	O	X
		42	2	00-7F 00-7F	INSERTION EFFECT PARAMETER 10 MSB INSERTION EFFECT PARAMETER 10 LSB	〃 〃	O	O	X	O (*Depends on Insertion Type)					O (Mixing Console *Depends on Insertion Type)	X	X	O	X
TOTAL SIZE			14																

The second byte of the address is considered as an Insertion effect number.
n: insertion effect number
For effect types that do not require MSB, the Parameters for Address 02-0B will be received and the Parameters for Address 30-42 will not be received.
For effect types that require MSB, the Parameters for Address 30-42 will be received and the Parameters for Address 02-0B will not be received.
When Bulk Dumps that include Effect Type data are transmitted, the Parameters for Address 02-0B will always be transmitted. But, effects that require MSB, when the bulk dump is received the Parameters for Address 02-0B will not be received.

*1 CVP-207: n=0~2
CVP-209: n=0~4

MIDI Parameter Change table (SPECIAL EFFECT)

CVP-203	X
CVP-205	X
CVP-207	O
CVP-209	O

Address (H)			Size (H)	Data (H)	Parameter	Description	Corresponding Voice/Part			MIDI Reception (effective or not for each part)					MIDI Transmission (generated data)				
							Regular/ Organ Voice	Mic/Vocal Harmony	Natural Voice	Song	Main Layer Left	Keyboard	Style	Extra	Panel (main generation method)	M.Pad	Style	Song	MIDI
04	00	00	2	00-7F 00-7F	INSERTION EFFECT TYPE MSBI NSERTION EFFECT TYPE LSB	Vocoder(89), Chordal(90), Detune(91), Chromatic(92), Thru(0...88, 93...127)	X	O	X	X	X	X	X	X	O (VH Type Select)	X	X	O	X
		02	1	00-7F	INSERTION EFFECT PARAMETER 1 Harmony Mode		X	O	X	X	X	X	X	X	O (VH Type Select)	X	X	O	X
		03	1	00-7F	INSERTION EFFECT PARAMETER 2 Harmony Gender Type	Off(0), Auto(1)	X	O	X	X	X	X	X	X	O (VH Type Select)	X	X	O	X
		04	1	00-7F	INSERTION EFFECT PARAMETER 3 Lead Gender Type	Off(0), Unison(1), Male(2), Female(3)	X	O	X	X	X	X	X	X	O (VH Type Select)	X	X	O	X
		05	1	00-7F	INSERTION EFFECT PARAMETER 4 Lead Gender Depth	-64...0...+63(0...127)	X	O	X	X	X	X	X	X	O (VH Type Select)	X	X	O	X
		06	1	00-7F	INSERTION EFFECT PARAMETER 5 Lead Pitch Correction	Free(0), Correct(1)	X	O	X	X	X	X	X	X	O (VH Type Select)	X	X	O	X
		07	1	00-7F	INSERTION EFFECT PARAMETER 6 Auto Upper Gender Threshold	0...12(0...12)	X	O	X	X	X	X	X	X	O (VH Type Select)	X	X	O	X
		08	1	00-7F	INSERTION EFFECT PARAMETER 7 Auto Lower Gender Threshold	0...12(0...12)	X	O	X	X	X	X	X	X	O (VH Type Select)	X	X	O	X
		09	1	00-7F	INSERTION EFFECT PARAMETER 8 Upper Gender Depth	-64...0...+63(0...127)	X	O	X	X	X	X	X	X	O (VH Type Select)	X	X	O	X
		0A	1	00-7F	INSERTION EFFECT PARAMETER 9 Lower Gender Depth	-64...0...+63(0...127)	X	O	X	X	X	X	X	X	O (VH Type Select)	X	X	O	X
		0B	1	00-7F	INSERTION EFFECT PARAMETER 10	L63>H...L=H...L<H63 (1...64...127)	X	O	X	X	X	X	X	X	O (MicSetting)	X	X	O	X
		0C	1	00-7F	INSERTION EFFECT PART NUMBER	AD(64), OFF(0...63, 65...127)	X	O	X	X	X	X	X	X	O (Vocal Harmony Sw)	X	X	O	X
		0D	1	00-7F	MW INSERTION CONTROL DEPTH	-64...0...+63	X	X	X	X	X	X	X	X	X	X	X	X	X
		0E	1	00-7F	BEND INSERTION CONTROL DEPTH	-64...0...+63	X	X	X	X	X	X	X	X	X	X	X	X	X
		0F	1	00-7F	CAT INSERTION CONTROL DEPTH	-64...0...+63	X	X	X	X	X	X	X	X	X	X	X	X	X
		10	1	00-7F	AC1 INSERTION CONTROL DEPTH	-64...0...+63	X	X	X	X	X	X	X	X	X	X	X	X	X
		11	1	00-7F	AC2 INSERTION CONTROL DEPTH	-64...0...+63	X	X	X	X	X	X	X	X	X	X	X	X	X
TOTAL SIZE			12																
		14	1	00-7F	UNIQUE INSERTION EFFECT EXTERNAL CONTROL CH1 (HARMONY CHANNEL)	1...16(0...15), OFF(127)	X	O	X	X	X	X	X	X	O (MicSetting)	X	X	O	X
		15	1	00-7F	UNIQUE INSERTION EFFECT EXTERNAL CONTROL CH1 (MELODY CHANNEL)	1...16(0...15), OFF(127)	X	O	X	X	X	X	X	X	X	X	X	O	X
TOTAL SIZE			2																
		20	1	00-7F	INSERTION EFFECT PARAMETER 11 Vibrate Depth	0...100cent(0...127)	X	O	X	X	X	X	X	X	O (VH Type Select)	X	X	O	X
		21	1	00-7F	INSERTION EFFECT PARAMETER 12 Vibrate Rate	0Hz(0), 0.1...12.7Hz(1...127)	X	O	X	X	X	X	X	X	O (VH Type Select)	X	X	O	X
		22	1	00-7F	INSERTION EFFECT PARAMETER 13 Vibrate Delayl	0...2.54sec(0...127)	X	O	X	X	X	X	X	X	O (VH Type Select)	X	X	O	X
		23	1	00-7F	NSERTION EFFECT PARAMETER 14		X	X	X	X	X	X	X	X	X	X	X	X	X
		24	1	00-7F	INSERTION EFFECT PARAMETER 15		X	X	X	X	X	X	X	X	X	X	X	X	X
		25	1	00-7F	INSERTION EFFECT PARAMETER 16		X	X	X	X	X	X	X	X	X	X	X	X	X
TOTAL SIZE			6																

The SPECIAL EFFECT Parameter cannot be reset to its factory setting with XG SYSTEM ON.

MIDI Parameter Change table (MULTI PART)

CVP-203	O
CVP-205	O
CVP-207	O
CVP-209	O

Address (H)			Size (H)	Data (H)	Parameter	Description	XG Default (H)	Corresponding Voice/Part			MIDI Reception (effective or not for each part)						MIDI Transmission (generated data)				
								Regular/ Organ Voice	Mic/Vocal Harmony	Natural Voice	Song	Main Layer Left	Keyboard	Style	Extra		Panel (main generation method)	M.Pad	Style	Song	MIDI
08	nn	00	1	00-20	ELEMENT RESERVE	0...32	part10=00, other parts=02	O	X	X	O	X	X	X	X		X	X	X	O	X
		01	1	00-7F	BANK SELECT MSB	0...127	part10=7F, other parts =00	O	X	O	O	O	X	O	O		X	X	X	O	X
		02	1	00-7F	BANK SELECT LSB	0...127	00	O	X	O	O	O	X	O	O		X	X	X	O	X
		03	1	00-7F	PROGRAM NUMBER	0...127	00	O	X	O	O	O	X	O	O		X	X	X	O	X
		04	1	00-0F,7F	Rcv CHANNEL	1...16, OFF	Part No.	O	X	X	O	X	X	X	X		X	X	X	O	X
		05	1	00-01	MONO/POLY MODE	MONO, POLY	01	O	X	X	O	X	X	X	X		X	X	X	O	X
		06	1	00-02	SAME NOTE NUMBER KEY ON ASSIGN	SINGLE, MULTI, INST (for Drum)	01	O	X	X	O	X	X	O	X		X	X	X	O	X
		07	1	00-03	PART MODE	NORMAL, DRUM, DRUMS1...2	part10=02, other parts=00	O	X	O	O	X	X	X	X		O (Drum Voice)	X	X	O	X
		08	1	00-7F	CHANNEL TRANSPOSE	-24...0...+24[semitones]	40	O	X	O	O	O	X	O	O		X	X	X	O	X
		09 0A	2	00-0F 00-0F	DETUNE	-12.8...0...+12.7[Hz] 1st bit3-0 bit7-4 2nd bit3-0 bit3-0	08 00	O	X	O	O	O	X	O	O		X	X	X	O	X
		0B	1	00-7F	VOLUME	0...127	64	O	X	O	O	O	X	O	O		X	X	X	O	X
		0C	1	00-7F	VELOCITY SENSE DEPTH	0...127	40	O	X	O	O	O	X	X	O		O (Sound Creator)	O	X	O	X
		0D	1	00-7F	VELOCITY SENSE OFFSET	0...127	40	O	X	O	O	O	X	X	O		O (Sound Creator)	O	X	O	X
		0E	1	00-7F	PAN	RND, L63...C...R63	40	O	X	O	O	O	X	O	O		X	X	X	O	X
		0F	1	00-7F	NOTE LIMIT LOW	C-2...G8	00	O	X	X	O	X	X	X	X		X	X	X	O	X
		10	1	00-7F	NOTE LIMIT HIGH	C-2...G8	7F	O	X	X	O	X	X	X	X		X	X	X	O	X
		11	1	00-7F	DRY LEVEL	0...127	7F	O	X	X	O	O	X	O	O		O (Sound Creator)	O	X	O	X
		12	1	00-7F	CHORUS SEND	0...127	00	O	X	O	O	O	X	O	O		X	X	X	O	X
		13	1	00-7F	REVERB SEND	0...127	28	O	X	O	O	O	X	O	O		X	X	X	O	X
		14	1	00-7F	VARIATION SEN	0...127	00	O	X	X	O	O	X	O	O		X	X	X	O	X
		15	1	00-7F	DVIBRATO RATE	-64...0...+63	40	O	X	X	O	O	X	O	O		X	X	X	O	X
		16	1	00-7F	VIBRATO DEPTH	-64...0...+63	40	O	X	X	O	O	X	O	O		X	X	X	O	X
		17	1	00-7F	VIBRATO DELAY	-64...0...+63	40	O	X	X	O	O	X	O	O		X	X	X	O	X
		18	1	00-7F	FILTER CUTOFF FREQUENCY	-64...0...+63	40	O	X	X	O	O	X	O	O		X	X	X	O	X
		19	1	00-7F	FILTER RESONANCE	-64...0...+63	40	O	X	X	O	O	X	O	O		X	X	X	O	X
		1A	1	00-7F	EG ATTACK TIME	-64...0...+63	40	O	X	X	O	O	X	O	O		X	X	X	O	X
		1B	1	00-7F	EG DECAY TIME	-64...0...+63	40	O	X	X	O	O	X	O	O		X	X	X	O	X
		1C	1	00-7F	EG RELEASE TIME	-64...0...+63	40	O	X	X	O	O	X	O	O		X	X	X	O	X
		1D	1	28-58	MW PITCH CONTROL	-24...0...+24[semitones]	40	O	X	X	O	O	X	O	O		X	X	X	O	X
		1E	1	00-7F	MW LOW PASS FILTER CONTROL	-9600...0...+9450[cent]	40	O	X	X	O	O	X	O	O		X	X	X	O	X
		1F	1	00-7F	MW AMPLITUDE CONTROL	-100...0...+100[%]	40	O	X	X	O	O	X	O	O		X	X	X	O	X
		20	1	00-7F	MW LFO PMOD DEPTH	0...127	0A	O	X	X	O	O	X	O	O		X	X	X	O	X
		21	1	00-7F	MW LFO FMOD DEPTH	0...127	00	O	X	X	O	O	X	O	O		X	X	X	O	X
		22	1	00-7F	MW LFO AMOD DEPTH	0...127	00	O	X	X	O	O	X	O	O		X	X	X	O	X
		23	1	28-58	BEND PITCH CONTROL	-24...0...+24[semitones]	42	O	X	O	O	O	X	O	O		X	X	X	O	X
		24	1	00-7F	BEND LOW PASS FILTER CONTROL	-9600...0...+9450[cent]	40	O	X	X	O	O	X	O	O		X	X	X	O	X
		25	1	00-7F	BEND AMPLITUDE CONTROL	-100...0...+100[%]	40	O	X	X	O	O	X	O	O		X	X	X	O	X
		26	1	00-7F	BEND LFO PMOD DEPTH	0...127	00	O	X	X	O	O	X	O	O		X	X	X	O	X
		27	1	00-7F	BEND LFO FMOD DEPTH	0...127	00	O	X	X	O	O	X	O	O		X	X	X	O	X
		28	1	00-7F	BEND LFO AMOD DEPTH	0...127	00	O	X	X	O	O	X	O	O		X	X	X	O	X
TOTAL SIZE			29																		
		30	1	00-01	Rcv PITCH BEND	OFF, ON	01	X	X	X	X	X	X	X	X		X	X	X	X	X
		31	1	00-01	Rcv CH AFTER TOUCH (CAT)	OFF, ON	01	X	X	X	X	X	X	X	X		X	X	X	X	X
		32	1	00-01	Rcv PROGRAM CHANGE	OFF, ON	01	X	X	X	X	X	X	X	X		X	X	X	X	X
		33	1	00-01	Rcv CONTROL CHANGE	OFF, ON	01	X	X	X	X	X	X	X	X		X	X	X	X	X
		34	1	00-01	Rcv POLY AFTER TOUCH (PAT)	OFF, ON	01	X	X	X	X	X	X	X	X		X	X	X	X	X
		35	1	00-01	Rcv NOTE MESSAGE	OFF, ON	01	O	X	O	O	X	X	X	X		X	X	X	O	X
		36	1	00-01	Rcv RPN	OFF, ON	01	X	X	X	X	X	X	X	X		X	X	X	X	X
		37	1	00-01	Rcv NRPN	OFF, ON	XG mode=01, GM mode=00	X	X	X	X	X	X	X	X		X	X	X	X	X
		38	1	00-01	Rcv MODULATION	OFF, ON	01	X	X	X	X	X	X	X	X		X	X	X	X	X
		39	1	00-01	Rcv VOLUME	OFF, ON	01	X	X	X	X	X	X	X	X		X	X	X	X	X
		3A	1	00-01	Rcv PAN	OFF, ON	01	X	X	X	X	X	X	X	X		X	X	X	X	X
		3B	1	00-01	Rcv EXPRESSION	OFF, ON	01	X	X	X	X	X	X	X	X		X	X	X	X	X
		3C	1	00-01	Rcv HOLD1	OFF, ON	01	X	X	X	X	X	X	X	X		X	X	X	X	X
		3D	1	00-01	Rcv PORTAMENTO	OFF, ON	01	X	X	X	X	X	X	X	X		X	X	X	X	X
		3E	1	00-01	Rcv SOSTENUTO	OFF, ON	01	X	X	X	X	X	X	X	X		X	X	X	X	X
		3F	1	00-01	Rcv SOFT PEDAL	OFF, ON	01	X	X	X	X	X	X	X	X		X	X	X	X	X
		40	1	00-01	Rcv BANK SELECT	OFF, ON	01	X	X	X	X	X	X	X	X		X	X	X	X	X
		41	1	00-7F	SCALE TUNING C	-63...0...+63[cent]	40	O	X	O	O	O	X	O	O		O (Function)	X	X	O	X
		42	1	00-7F	SCALE TUNING C#	-63...0...+63[cent]	40	O	X	O	O	O	X	O	O		O (Function)	X	X	O	X
		43	1	00-7F	SCALE TUNING D	-63...0...+63[cent]	40	O	X	O	O	O	X	O	O		O (Function)	X	X	O	X
		44	1	00-7F	SCALE TUNING D#	-63...0...+63[cent]	40	O	X	O	O	O	X	O	O		O (Function)	X	X	O	X
		45	1	00-7F	SCALE TUNING E	-63...0...+63[cent]	40	O	X	O	O	O	X	O	O		O (Function)	X	X	O	X
		46	1	00-7F	SCALE TUNING F	-63...0...+63[cent]	40	O	X	O	O	O	X	O	O		O (Function)	X	X	O	X
		47	1	00-7F	SCALE TUNING F#	-63...0...+63[cent]	40	O	X	O	O	O	X	O	O		O (Function)	X	X	O	X
		48	1	00-7F	SCALE TUNING G	-63...0...+63[cent]	40	O	X	O	O	O	X	O	O		O (Function)	X	X	O	X
		49	1	00-7F	SCALE TUNING G#	-63...0...+63[cent]	40	O	X	O	O	O	X	O	O		O (Function)	X	X	O	X
		4A	1	00-7F	SCALE TUNING A	-63...0...+63[cent]	40	O	X	O	O	O	X	O	O		O (Function)	X	X	O	X
		4B	1	00-7F	SCALE TUNING A#	-63...0...+63[cent]	40	O	X	O	O	O	X	O	O		O (Function)	X	X	O	X
		4C	1	00-7F	SCALE TUNING B	-63...0...+63[cent]	40	O	X	O	O	O	X	O	O		O (Function)	X	X	O	X
		4D	1	28-58	CAT PITCH CONTROL	-24...0...+24[semitones]	40	O	X	X	O	O	X	X	O		X	X	X	O	X
		4E	1	00-7F	CAT LOW PASS FILTER CONTROL	-9600...0...+9450[cent]	40	O	X	X	O	O	X	X	O		X	X	X	O	X
		4F	1	00-7F	CAT AMPLITUDE CONTROL	-100...0...+100[%]	40	O	X	X	O	O	X	X	O		X	O	X	O	X
		50	1	00-7F	CAT LFO PMOD DEPTH	0...127	00	O	X	X	O	O	X	X	O		X	O	X	O	X
		51	1	00-7F	CAT LFO FMOD DEPTH	0...127	00	O	X	X	O	O	X	X	O		X	X	X	O	X

Address (H)			Size (H)	Data (H)	Parameter	Description	XG Default (H)	Corresponding Voice/Part			MIDI Reception (effective or not for each part)					MIDI Transmission (generated data)				
								Regular/ Organ Voice	Mic/Vocal Harmony	Natural Voice	Song	Main Layer Left	Keyboard	Style	Extra	Panel (main generation method)	M.Pad	Style	Song	MIDI
		52	1	00-7F	CAT LFO AMOD DEPTH	0...127	00	O	X	X	O	O	X	X	O	X	X	X	O	X
		53	1	28-58	PAT PITCH CONTROL	-24...0...+24[semitones]	40	X	X	X	X	X	X	X	X	X	X	X	X	X
		54	1 1	00-7F	PAT LOW PASS FILTER CONTROL	-9600...0...+9450[cent]	40	X	X	X	X	X	X	X	X	X	X	X	X	X
		55	1	00-7F	PAT AMPLITUDE CONTROL	-100...0...+100[%]	40	X	X	X	X	X	X	X	X	X	X	X	X	X
		56	1	00-7F	PAT LFO PMOD DEPTH	0...127	00	X	X	X	X	X	X	X	X	X	X	X	X	X
		57	1	00-7F	PAT LFO FMOD DEPTH	0...127	00	X	X	X	X	X	X	X	X	X	X	X	X	X
		58	1	00-7F	PAT LFO AMOD DEPTH	0...127	00	X	X	X	X	X	X	X	X	X	X	X	X	X
		59	1	00-5F	AC1 CONTROLLER NUMBER	0...95	10	X	X	X	X	X	X	X	X	X	X	X	X	X
		5A	1	28-58	AC1 PITCH CONTROL	-24...0...+24[semitones]	40	X	X	X	X	X	X	X	X	X	X	X	X	X
		5B	1	00-7F	AC1 LOW PASS FILTER CONTROL	-9600...0...+9450[cent]	40	X	X	X	X	X	X	X	X	X	X	X	X	X
		5C	1	00-7F	AC1 AMPLITUDE CONTROL	-100...0...+100[%]	40	X	X	X	X	X	X	X	X	X	X	X	X	X
		5D	1	00-7F	AC1 LFO PMOD DEPTH	0...127	00	X	X	X	X	X	X	X	X	X	X	X	X	X
		5E	1	00-7F	AC1 LFO FMOD DEPTH	0...127	00	X	X	X	X	X	X	X	X	X	X	X	X	X
		5F	1	00-7F	AC1 LFO AMOD DEPTH	0...127	00	X	X	X	X	X	X	X	X	X	X	X	X	X
		60	1	00-5F	AC2 CONTROLLER NUMBER	0...95	11	X	X	X	X	X	X	X	X	X	X	X	X	X
		61	1	28-58	AC2 PITCH CONTROL	-24...0...+24[semitones]	40	X	X	X	X	X	X	X	X	X	X	X	X	X
		62	1	00-7F	AC2 LOW PASS FILTER CONTROL	-9600...0...+9450[cent]	40	X	X	X	X	X	X	X	X	X	X	X	X	X
		63	1	00-7F	AC2 AMPLITUDE CONTROL	-100...0...+100[%]	40	X	X	X	X	X	X	X	X	X	X	X	X	X
		64	1	00-7F	AC2 LFO PMOD DEPTH	0...127	00	X	X	X	X	X	X	X	X	X	X	X	X	X
		65	1	00-7F	AC2 LFO FMOD DEPTH	0...127	00	X	X	X	X	X	X	X	X	X	X	X	X	X
		66	1	00-7F	AC2 LFO AMOD DEPTH	0...127	00	X	X	X	X	X	X	X	X	X	X	X	X	X
		67	1	00-01	PORTAMENTO SWITCH	OFF, ON	00	O	X	X	O	O	X	X	O	X	X	X	O	X
		68	1	00-7F	PORTAMENTO TIME	0...127	00	O	X	X	O	O	X	X	O	X	X	X	O	X
		69	1	00-7F	PITCH EG INITIAL LEVEL	-64...0...+63	40	X	X	X	X	X	X	X	X	X	X	X	X	X
		6A	1	00-7F	PITCH EG ATTACK TIME	-64...0...+63	40	X	X	X	X	X	X	X	X	X	X	X	X	X
		6B	1	00-7F	PITCH EG RELEASE LEVEL	-64...0...+63	40	X	X	X	X	X	X	X	X	X	X	X	X	X
		6C	1	00-7F	PITCH EG RELEASE TIME	-64...0...+63	40	X	X	X	X	X	X	X	X	X	X	X	X	X
		6D	1	01-7F	VELOCITY LIMIT LOW	1...127	01	X	X	X	X	X	X	X	X	X	X	X	X	X
		6E	1	01-7F	VELOCITY LIMIT HIGH	1...127	7F	X	X	X	X	X	X	X	X	X	X	X	X	X
TOTAL SIZE				3F																
		70	1		NOT USED		-	-	-	-	-	-	-	-	-	-	-	-	-	-
		71	1		NOT USED		-	-	-	-	-	-	-	-	-	-	-	-	-	-
		72	1	00-7F	EQ BASS GAIN	-12dB...+12dB	40	O (*2)	X	X	O (*2)	O (*2)	X	O (*2)	O (*2)	O (Mixing Console) (*2)	O	O	O	X
		73	1	00-7F	EQ TREBLE GAIN	-12dB...+12dB	40	O (*2)	X	X	O (*2)	O (*2)	X	O (*2)	O (*2)	O (Mixing Console) (*2)	O	O	O	X
TOTAL SIZE				04																
		74	1		NOT USED		-	-	-	-	-	-	-	-	-	-	-	-	-	-
		75	1		NOT USED		-	-	-	-	-	-	-	-	-	-	-	-	-	-
		76	1	04-28	EQ BASS FREQUENCY	32...2.0k[Hz]	0C	O (*2)	X	X	O (*2)	O (*2)	X	X	O (*2)	O (Sound Creator) (*2)	O	X	O	X
		77	1	1C-3A	EQ TREBLE FREQUENCY	500...16.0k[Hz]	36	O (*2)	X	X	O (*2)	O (*2)	X	X	O (*2)	O (Sound Creator) (*2)	O	X	O	X
		78	1		NOT USED		-	-	-	-	-	-	-	-	-	-	-	-	-	-
		79	1		NOT USED		-	-	-	-	-	-	-	-	-	-	-	-	-	-
		7A	1		NOT USED		-	-	-	-	-	-	-	-	-	-	-	-	-	-
		7B	1		NOT USED		-	-	-	-	-	-	-	-	-	-	-	-	-	-
		7C	1		NOT USED		-	-	-	-	-	-	-	-	-	-	-	-	-	-
		7D	1		NOT USED		-	-	-	-	-	-	-	-	-	-	-	-	-	-
		7E	1		NOT USED		-	-	-	-	-	-	-	-	-	-	-	-	-	-
		7F	1		NOT USED		-	-	-	-	-	-	-	-	-	-	-	-	-	-
TOTAL SIZE				0C																

nn = PART NUMBER

If there is a Drum Voice assigned to the part, the following parameters are ineffective.
- BANK SELECT LSB
- MONO/POLY MODE
- SCALE TUNING
- PORTAMENTO
- PITCH EG
- FILTER MODULATION DEPTH (FMOD DEPTH)
- AMPLITUDE MODULATION DEPTH (AMOD DEPTH)

*2 On CVP-203/205, the following parameters are not accepted, or are not transmitted by the Panel operations.
- EQ BASS GAIN
- EQ TREBLE GAIN
- EQ BASS FREQUENCY
- EQ TREBLE FREQUENCY

MIDI Parameter Change table (A/D PART)

CVP-203	X
CVP-205	O
CVP-207	O
CVP-209	O

Address (H)			Size (H)	Data (H)	Parameter	Description	Corresponding Voice/Part			MIDI Reception (effective or not for each part)					MIDI Transmission (generated data)				
							Regular/ Organ Voice	Mic/Vocal Harmony	Natural Voice	Song	Main Layer Left	Keyboard	Style	Extra	Panel (main generation method)	M.Pad	Style	Song	MIDI
10	00	00	1	00-01	INPUT GAIN	MIC, LINE	X	X	X	X	X	X	X	X	X	X	X	X	X
		01	1	00-7F	BANK SELECT MSB	0...127	X	X	X	X	X	X	X	X	X	X	X	X	X
		02	1	00-7F	BANK SELECT LSB	0...127	X	X	X	X	X	X	X	X	X	X	X	X	X
		03	1	00-7F	PROGRAM NUMBER	0...127	X	X	X	X	X	X	X	X	X	X	X	X	X
		04	1	00-1F,7F	Rcv CHANNEL	1...16,OFF	X	O	X	X	X	X	X	X	X	X	X	O	X
		05	1		NOT USED		-	-	-	-	-	-	-	-	-	-	-	-	-
		06	1		NOT USED		-	-	-	-	-	-	-	-	-	-	-	-	-
		07	1		NOT USED		-	-	-	-	-	-	-	-	-	-	-	-	-
		08	1		NOT USED		-	-	-	-	-	-	-	-	-	-	-	-	-
		09	1		NOT USED		-	-	-	-	-	-	-	-	-	-	-	-	-
		0A	1		NOT USED		-	-	-	-	-	-	-	-	-	-	-	-	-
		0B	1	00-7F	VOLUME	0...127	X	O	X	X	X	X	X	X	O (Mixing Console)	X	X	O	X
		0C	1		NOT USED		-	-	-	-	-	-	-	-	-	-	-	-	-
		0D	1		NOT USED		-	-	-	-	-	-	-	-	-	-	-	-	-
		0E	1	01-7F	PAN	L63...C...R63	X	O	X	X	X	X	X	X	O (Mixing Console)	X	X	O	X
		0F	1		NOT USED		-	-	-	-	-	-	-	-	-	-	-	-	-
		10	1		NOT USED		-	-	-	-	-	-	-	-	-	-	-	-	-
		11	1	00-7F	DRY LEVEL		X	O	X	X	X	X	X	X	O (Mixing Console) (CVP-205 only)	X	X	O	X
		12	1	00-7F	CHORUS SEND		X	O	X	X	X	X	X	X	O (Mixing Console)	X	X	O	X
		13	1	00-7F	REVERB SEND		X	O	X	X	X	X	X	X	O (Mixing Console)	X	X	O	X
		14	1	00-7F	VARIATION SEND		X	O	X	X	X	X	X	X	O (Mixing Console) (CVP-205 only)	X	X	O	X

TOTAL SIZE 15

10	0n	30	1		NOT USED		-	-	-	-	-	-	-	-	-	-	-	-	-
		31	1		NOT USED		-	-	-	-	-	-	-	-	-	-	-	-	-
		32	1	00-01	Rcv PROGRAM CHANGE	OFF, ON	X	X	X	X	X	X	X	X	X	X	X	X	X
		33	1	00-01	Rcv CONTROL CHANGE	OFF, ON	X	X	X	X	X	X	X	X	X	X	X	X	X
		34	1		NOT USED		-	-	-	-	-	-	-	-	-	-	-	-	-
		35	1	00-01	MUTE	ON, OFF	X	X	X	X	X	X	X	X	X	X	X	X	X
		36	1		NOT USED		-	-	-	-	-	-	-	-	-	-	-	-	-
		37	1		NOT USED		-	-	-	-	-	-	-	-	-	-	-	-	-
		38	1		NOT USED		-	-	-	-	-	-	-	-	-	-	-	-	-
		39	1	00-01	Rcv VOLUME	OFF, ON	X	X	X	X	X	X	X	X	X	X	X	X	X
		3A	1	00-01	Rcv PAN	OFF, ON	X	X	X	X	X	X	X	X	X	X	X	X	X
		3B	1	00-01	Rcv EXPRESSION	OFF, ON	X	X	X	X	X	X	X	X	X	X	X	X	X
		3C	1		NOT USED		-	-	-	-	-	-	-	-	-	-	-	-	-
		3D	1		NOT USED		-	-	-	-	-	-	-	-	-	-	-	-	-
		3E	1		NOT USED		-	-	-	-	-	-	-	-	-	-	-	-	-
		3F	1		NOT USED		-	-	-	-	-	-	-	-	-	-	-	-	-
		40	1	00-01	Rcv BANK SELECT	OFF, ON	X	X	X	X	X	X	X	X	X	X	X	X	X
		41	1		NOT USED		-	-	-	-	-	-	-	-	-	-	-	-	-
		42	1		NOT USED		-	-	-	-	-	-	-	-	-	-	-	-	-
		43	1		NOT USED		-	-	-	-	-	-	-	-	-	-	-	-	-
		44	1		NOT USED		-	-	-	-	-	-	-	-	-	-	-	-	-
		45	1		NOT USED		-	-	-	-	-	-	-	-	-	-	-	-	-
		46	1		NOT USED		-	-	-	-	-	-	-	-	-	-	-	-	-
		47	1		NOT USED		-	-	-	-	-	-	-	-	-	-	-	-	-
		48	1		NOT USED		-	-	-	-	-	-	-	-	-	-	-	-	-
		49	1		NOT USED		-	-	-	-	-	-	-	-	-	-	-	-	-
		4A	1		NOT USED		-	-	-	-	-	-	-	-	-	-	-	-	-
		4B	1		NOT USED		-	-	-	-	-	-	-	-	-	-	-	-	-
		4C	1		NOT USED		-	-	-	-	-	-	-	-	-	-	-	-	-
		4D	1		NOT USED		-	-	-	-	-	-	-	-	-	-	-	-	-
		4E	1		NOT USED		-	-	-	-	-	-	-	-	-	-	-	-	-
		4F	1		NOT USED		-	-	-	-	-	-	-	-	-	-	-	-	-
		50	1		NOT USED		-	-	-	-	-	-	-	-	-	-	-	-	-
		51	1		NOT USED		-	-	-	-	-	-	-	-	-	-	-	-	-
		52	1		NOT USED		-	-	-	-	-	-	-	-	-	-	-	-	-
		53	1		NOT USED		-	-	-	-	-	-	-	-	-	-	-	-	-
		54	1		NOT USED		-	-	-	-	-	-	-	-	-	-	-	-	-
		55	1		NOT USED		-	-	-	-	-	-	-	-	-	-	-	-	-
		56	1		NOT USED		-	-	-	-	-	-	-	-	-	-	-	-	-
		57	1		NOT USED		-	-	-	-	-	-	-	-	-	-	-	-	-
		58	1		NOT USED		-	-	-	-	-	-	-	-	-	-	-	-	-
		59	1	00-5F	AC1 CONTROLLER NUMBER	0...95	X	X	X	X	X	X	X	X	X	X	X	X	X
		5A	1		NOT USED		-	-	-	-	-	-	-	-	-	-	-	-	-
		5B	1		NOT USED		-	-	-	-	-	-	-	-	-	-	-	-	-
		5C	1		NOT USED		-	-	-	-	-	-	-	-	-	-	-	-	-
		5D	1		NOT USED		-	-	-	-	-	-	-	-	-	-	-	-	-
		5E	1		NOT USED		-	-	-	-	-	-	-	-	-	-	-	-	-
		5F	1		NOT USED		-	-	-	-	-	-	-	-	-	-	-	-	-
		60	1	00-5F	AC2 CONTROLLER NUMBER	0...95	X	X	X	X	X	X	X	X	X	X	X	X	X

TOTAL SIZE 31

The A/D PART Parameter cannot be reset to its factory setting with XG SYSTEM ON.

MIDI Parameter Change table (DRUM SETUP)

CVP-203	O
CVP-205	O
CVP-207	O
CVP-209	O

Address (H)			Size (H)	Data (H)	Parameter	Description	XG Default (H)	Corresponding Voice/Part			MIDI Reception (effective or not for each part)					MIDI Transmission (generated data)				
								Regular/ Organ Voice	Mic/Vocal Harmony	Natural Voice	Song	Main Layer Left	Keyboard	Style	Extra	Panel (main generation method)	M.Pad	Style	Song	MIDI
10	rr	00	1	00-7F	PITCH COARSE	-64...0...+63	40	O (Drum only)	X	X	O	X	X	X	X	X	X	O	O	X
		01	1	00-7F	PITCH FINE	-64...0...+63[cent]	40	O (Drum only)	X	X	O	X	X	X	X	X	X	O	O	X
		02	1	00-7F	LEVEL	0...127	Depends on the note	O (Drum only)	X	X	O	X	X	X	X	X	X	O	O	X
		03	1	00-7F	ALTERNATE GROUP	OFF, 1...127	Depends on the note	O (Drum only)	X	X	O	X	X	X	X	X	X	X	O	X
		04	1	00-7F	PAN	RND, L63...C...R63	Depends on the note	O (Drum only)	X	X	O	X	X	X	X	X	X	O	O	X
		05	1	00-7F	REVERB SEND	0...127	Depends on the note	O (Drum only)	X	X	O	X	X	X	X	X	X	O	O	X
		06	1	00-7F	CHORUS SEND	0...127	Depends on the note	O (Drum only)	X	X	O	X	X	X	X	X	X	O	O	X
		07	1	00-7F	VARIATION SEN	0...127	7F	O (Drum only)	X	X	O	X	X	X	X	X	X	O	O	X
		08	1	00-01	DKEY ASSIGN	SINGLE, MULTI	00	O (Drum only)	X	X	O	X	X	X	X	X	X	X	O	X
		09	1	00-01	Rcv NOTE OFF	OFF, ON	Depends on the note	O (Drum only)	X	X	O	X	X	X	X	X	X	X	O	X
		0A	1	00-01	Rcv NOTE ON	OFF, ON	01	O (Drum only)	X	X	O	X	X	X	X	X	X	X	O	X
		0B	1	00-7F	LOW PASS FILTER CUTOFF FREQUENCY	-64...0...+63	40	O (Drum only)	X	X	O	X	X	X	X	X	X	O	O	X
		0C	1	00-7F	LOW PASS FILTER RESONANCE	-64...0...+63	40	O (Drum only)	X	X	O	X	X	X	X	X	X	O	O	X
		0D	1	00-7F	EG ATTACK RATE	-64...0...+63	40	O (Drum only)	X	X	O	X	X	X	X	X	X	O	O	X
		0E	1	00-7F	EG DECAY1 RATE	-64...0...+63	40	O (Drum only)	X	X	O	X	X	X	X	X	X	O	O	X
		0F	1	00-7F	EG DECAY2 RATE	-64...0...+63	40	O (Drum only)	X	X	O	X	X	X	X	X	X	O	O	X
TOTAL SIZE			10																	

		20	1	00-7F	EQ BASS GAIN	-12...+12[dB]	40	X	X	X	X	X	X	X	X	X	X	X	X	X
		21	1	00-7F	EQ TREBLE GAIN	-12...+12[dB]	40	X	X	X	X	X	X	X	X	X	X	X	X	X
		22	1		NOT USED		-	-	-	-	-	-	-	-	-	-	-	-	-	-
		23	1		NOT USED		-	-	-	-	-	-	-	-	-	-	-	-	-	-
		24	1	04-28	EQ BASS FREQUENCY	32...2.0k[Hz	0C	X	X	X	X	X	X	X	X	X	X	X	X	X
		25	1	1C-3A	EQ TREBLE FREQUENCY	]500...16.0k[Hz]	36	X	X	X	X	X	X	X	X	X	X	X	X	X
		26	1		NOT USED		-	-	-	-	-	-	-	-	-	-	-	-	-	-
		27	1		NOT USED		-	-	-	-	-	-	-	-	-	-	-	-	-	-
		28	1		NOT USED		-	-	-	-	-	-	-	-	-	-	-	-	-	-
		29	1		NOT USED		-	-	-	-	-	-	-	-	-	-	-	-	-	-
		2A	1		NOT USED		-	-	-	-	-	-	-	-	-	-	-	-	-	-
		2B	1		NOT USED		-	-	-	-	-	-	-	-	-	-	-	-	-	-
		2C	1		NOT USED		-	-	-	-	-	-	-	-	-	-	-	-	-	-
		2D	1		NOT USED		-	-	-	-	-	-	-	-	-	-	-	-	-	-
TOTAL SIZE			0E																	

n: Drum Setup Number (0-1)
rr: note number (0D-5B)

In the following cases, the CVP/PSR will initialize all Drum Setups.
- XG SYSTEM ON received
- GM SYSTEM ON received
- DRUM SETUP RESET received (only when in XG mode)

[Note]
- When a part to which a Drum Setup is assigned receives a program change, the assigned Drum Setup will be initialized.
- If the same Drum Setup is assigned to two or more parts, changes in Drum Setup parameters (including program changes) will apply to all parts to which it is assigned.

SYSTEM EXCLUSIVE MESSAGES

* Not received when the Receive System Exclusive Message is set to off.
* Not transmitted when the Transmit System Exclusive Message is set to on.

System Exclusive Messages

O: available

MIDI Event	Data Format	Corresponding Voice/Part			MIDI Reception (effective or not for each part)					MIDI Reception (affecting the panel)	MIDI Transmission (generated data)				
		Regular/ Organ Voice	Mic/Vocal Harmony	Natural Voice	Song	Main Layer Left	Keyboard	Style	Extra		Panel (main generation method)	M.Pad	Style	Song	MIDI
Section Control	F0 43 7E 00 ss dd F7 11110000 F0= Exclusive status 01000011 43= YAMAHA ID 01111110 7E= Style 00000000 00= 0sssssss ss= Switch No. 00H INTRO A 01H INTRO B 02H INTRO C 03H INTRO D 08H MAIN A 09H MAIN B 0AH MAIN C 0BH MAIN D 10H FILL IN AA 11H FILL IN BB 12H FILL IN CC 13H FILL IN DD 18H BREAK FILL 20H ENDING A 21H ENDING B 22H ENDING C 23H ENDING D 0ddddddd dd= Switch On/Off 00H (Off) 7HF (On) 11110111 F7= End of Exclusive	-	-	-	-	-	-	-	-	O (Section LED)	O (Section Sw)	X	X	O	X
Tempo Control	F0 43 7E 01 t4 t3 t2 t1 F7 11110000 F0= Exclusive status 01000011 43= YAMAHA ID 01111110 7E= Style 00000001 01= 0ttttttt t4= tempo4 0ttttttt t3= tempo3 0ttttttt t2= tempo2 0ttttttt t1= tempo1 11110111 F7= End of Exclusive	-	-	-	-	-	-	-	-	O (Tempo indication)	O (Tempo Sw)	X	X	O	X
Chord Control	F0 43 7E tt d1 d2 d3 d4 F7 Type 1 (tt=2) 11110000 F0= Exclusive status 01000011 43= YAMAHA ID 01111110 7E= Style 00000010 02= type 1 0ddddddd d1= chord root(cr) 0ddddddd d2= chord type(ct) 0ddddddd d3= bass note(bn) 0ddddddd d4= bass type(bt) 11110111 F7= End of Exclusive cr: Chord Root 0fffnnnn fff: b or #, nnnn: note(root) 0000nnnn 0n bbb 0fff0000 x0 reserved 0001nnnn 1n bb 0fff0001 x1 C 0010nnnn 2n b 0fff0010 x2 D 0011nnnn 3n natural 0fff0011 x3 E 0100nnnn 4n # 0fff0100 x4 F 0101nnnn 5n ## 0fff0101 x5 G 0110nnnn 6n ### 0fff0110 x6 A 0fff0111 x7 B ct: Chord Type 0 - 34,127 00000000 00 0 Maj 00010010 12 18 dim7 00000001 01 1 Maj6 00010011 13 19 7th 00000010 02 2 Maj7 00010100 14 20 7sus4 00000011 03 3 Maj7(#11) 00010101 15 21 7b5 00000100 04 4 Maj(9) 00010110 16 22 7(9) 00000101 05 5 Maj7(9) 00010111 17 23 7(#11) 00000110 06 6 Maj6(9) 00011000 18 24 7(13) 00000111 07 7 aug 00011001 19 25 7(b9) 00001000 08 8 min 00011010 1A 26 7(b13) 00001001 09 9 min6 00011011 1B 27 7(#9) 00001010 0A 10 min7 00011100 1C 28 Maj7aug 00001011 0B 11 min7b5 00011101 1D 29 7aug 00001100 0C 12 min(9) 00011110 1E 30 1+8 00001101 0D 13 min7(9) 00011111 1F 31 1+5 00001110 0E 14 min7(11) 00100000 20 32 sus4 00001111 0F 15 minMaj7 00100001 21 33 1+2+5 00010000 10 16 minMaj7(9) 00100010 22 34 cc 00010001 11 17 dim bn : On Bass Chord Same as Chord root 127:No bass chord bt : Bass Chord Same as Chord type 127:No bass chord * Not received when Receive Chord System Exclusive Message is set to off. * Not transmitted when Transmit Chord System Exclusive Message is set to on.	-	-	-	-	-	-	-	-	O (Chord indication)	O (Keyboard)	X	X	O	X
	Type 2 (tt=3) 11110000 F0= Exclusive status 01000011 43= YAMAHA ID 01111110 7E= Style 00000011 03= type 2 0ddddddd dd= note1 0ddddddd dd= note2 0ddddddd dd= note3 : : 0ddddddd dd= note10 11110111 F7= End of Exclusive	-	-	-	-	-	-	-	-	O (Chord indication)	X	X	X	X	X

System Exclusive Messages (Universal Realtime messages)

MIDI Event	Data Format	Corresponding Voice/Part			MIDI Reception (effective or not for each part)					MIDI Reception (affecting the panel)	MIDI Transmission (generated data)				
		Regular/ Organ Voice	Mic/Vocal Harmony	Natural Voice	Song	Main Layer Left	Keyboard	Style	Extra		Panel (main generation method)	M.Pad	Style	Song	MIDI
Master Volume	F0 7F 7F 04 01 ll mm F7 11110000 F0= Exclusive status 01111111 7F= Universal Real Time 01111111 7F= ID of target device 00000100 04= Sub-ID #1=Device Control Message 00000001 01= Sub-ID #2=Master Volume 0lllllll ll= Volume LSB 0mmmmmmm mm= Volume MSB 11110111 F7= End of Exclusive or F0 7F XN 04 01 ll mm F7 11110000 F0= Exclusive status 01111111 7F= Universal Real Time 0xxxnnnn XN= When N is received N=0-F, whichever is received. X=ignored 00000100 04= Sub-ID #1=Device Control Message 00000001 01= Sub-ID #2=Master Volume 0lllllll ll= Volume LSB 0mmmmmmm mm= Volume MSB 11110111 F7= End of Exclusive	O	-	O	O	x	X	X	X	X	X	X	X	X (Output as XG Master Volume)	X

System Exclusive Messages (Universal Non Realtime messages)

MIDI Event	Data Format	Corresponding Voice/Part			MIDI Reception (effective or not for each part)					MIDI Reception (affecting the panel)	MIDI Transmission (generated data)				
		Regular/ Organ Voice	Mic/Vocal Harmony	Natural Voice	Song	Main Layer Left	Keyboard	Style	Extra		Panel (main generation method)	M.Pad	Style	Song	MIDI
General MIDI System On	F0 7E 7F 09 01 F7 11110000 F0= Exclusive status 01111111 7F= Universal Real Time 01111111 7F= ID of target device 00001001 09= Sub-ID #1=General MIDI Message 00000001 01= Sub-ID #2=General MIDI On 11110111 F7= End of Exclusive or F0 7E XN 09 01 F7 11110000 F0= Exclusive status 01111111 7F= Universal Real Time 0xxxnnnn XN= When N is received N=0-F,whichever is received. X=ignored 00001001 09= Sub-ID #1=General MIDI Message 00000001 01= Sub-ID #2=General MIDI On 11110111 F7= End of Exclusive	O	-	O	O	x	X	X	O	O (Mixing Console)	X	X	X	O	X

System Exclusive Messages (XG)

MIDI Event	Data Format	Corresponding Voice/Part			MIDI Reception (effective or not for each part)					MIDI Reception (affecting the panel)	MIDI Transmission (generated data)				
		Regular/ Organ Voice	Mic/Vocal Harmony	Natural Voice	Song	Main Layer Left	Keyboard	Style	Extra		Panel (main generation method)	M.Pad	Style	Song	MIDI
XG Parameter Change	F0 43 1n 4C hh mm ll dd ... F7 11110000 F0= Exclusive status 01000011 43= YAMAHA ID 0001nnnn 1n= Device Number n=always 0 (when transmit), n=0-F (when recieve) 01001100 4C= Model ID 0hhhhhhh hh= Address High 0mmmmmmm mm= Address Mid 0lllllll ll= Address Low 0ddddddd dd= Data : 11110111 F7= End of Exclusive	*Refer to Parameter Change Table			*Refer to Parameter Change Table					-	*Refer to Parameter Change Table				O (When receiving the XG Parameter Request)
XG Bulk Dump	F0 43 0n 4C aa bb hh mm ll dd ... dd cc F7 11110000 F0= Exclusive status 01000011 43= YAMAHA ID 0000nnnn 0n= Device Number n=always 0 (when transmit), n=0-F (when recieve) 01001100 4C= Model ID 0aaaaaaa aa= Byte Count MSB 0bbbbbbb bb= Byte Count LSB 0hhhhhhh hh= Address High 0mmmmmmm mm= Address Mid 0lllllll ll= Address Low 0ddddddd dd= Data : 0ddddddd dd= Data 0ccccccc cc= Checksum 11110111 F7= End of Exclusive	*Refer to Parameter Change Table			*Refer to Parameter Change Table					-	X	X	X	X (Output as Parameter Change	O (When receiving the XG Dump Request)
XG Parameter Request	F0 43 3n 4C hh ll F7 11110000 F0= Exclusive status 01000011 43= YAMAHA ID 0011nnnn 3n= Device Number n=always 0 (when transmit), n=0-F (when recieve) 01001100 4C= Model ID 0hhhhhhh hh= Address High 0mmmmmmm mm= Address Mid 0lllllll ll= Address Low 0ddddddd dd= Data 11110111 F7= End of Exclusive	-	-	-	-	-	-	-	-	O (-)	X	X	X	X	X
XG Dump Request	F0 43 2n 4C hh mm ll F7 11110000 F0= Exclusive status 01000011 43= YAMAHA ID 0010nnnn 2n= Device Number n=always 0 (when transmit), n=0-F (when recieve) 01001100 4C= Model ID 0hhhhhhh hh= Address High 0mmmmmmm mm= Address Mid 0lllllll ll= Address Low 0ddddddd dd= Data 11110111 F7= End of Exclusive	-	-	-	-	-	-	-	-	O (-)	X	X	X	X	X

System Exclusive Messages (Clavinova compliance)

```
11110000  F0= Exclusive status
01000011  43= YAMAHA ID
01110011  73= Clavinova ID
    :              :
11110111  F7= End of Exclusive
```

MIDI Event	Data Format	Corresponding Voice/Part			MIDI Reception (effective or not for each part)					MIDI Reception (affecting the panel)	MIDI Transmission (generated data)				
		Regular/ Organ Voice	Mic/Vocal Harmony	Natural Voice	Song	Main Layer Left	Keyboard	Style	Extra		Panel (main generation method)	M.Pad	Style	Song	MIDI
Internal Clock	F0 43 73 01 02 F7 00000001 01= Model ID (Clavinova common ID) 00000010 02= Internal Clock Substatus	-	-	-	X	X	X	X	X	O (Function)	X	X	X	X	X
External Clock	F0 43 73 01 03 F7 00000001 01= Model ID (Clavinova common ID) 00000011 03= External Clock Substatus	-	-	-	X	X	X	X	X	O (Function)	X	X	X	X	X
Organ Flutes data Bulk Dump	F0 43 73 01 06 0B 00 00 01 06 0n [Bulk Data] sum F7 01H Model ID (Clavinova common ID) 06H Bulk ID 0BH Bulk No. (Organ Flutes data Bulk Dump) 00H, 00H, 01H, 06H Data Length :16bytes 1st Channel No. 0nH 2nd Footage [1'] 00 - mmH mm : maximum 3rd [1 1/3'] 00 - mmH 5th [2'] 00 - mmH 6th [2 2/3'] 00 - mmH 7th [4'] 00 - mmH 8th [5 1/3'] 00 - mmH 9th [8'] 00 - mmH 10th [16'] 00 - mmH 11th [Attack 2'] 00 - mmH 12th [Attack 2 2/3'] 00 - mmH 13th [Attack 4'] 00 - mmH 14th Settings [Attack Length] 00 - mmH 15th [Response] 00 - mmH 16th [Attack Mode] 00 - 01H 00H: Each, 01H: First 17th [Wave Variation] 00 - 01H 00H: Sine, 01H: Tone Wheel 18th [Volume] 01 - vvH vv: maximum 19th [aux] 00H 20th [aux] 00H 21th [aux] 00H 22th [aux] 00H sum Check Sum = 0-sum(BULK DATA) CVP-203 X - - CVP-205 X - - CVP-207 O mm=7 vv=8 CVP-209 O mm=8 vv=9	O (Organ Flute)	X	X	O	O	X	X	O	O (Sound Creator)	O (Sound Creator)	X	X	O	X
Natural Voice Reverb Type	F0 43 73 01 31 0n 00 dd F7 00000001 01= Model ID (Clavinova common ID) 00110001 31= Natural Voice Exclusive data 0000nnnn 0n= Channel No. (Always 00) 00000000 00= Natural Voice Reverb Type Substatus 0ddddddd dd= data (0:Room, 1:Hall1, 2:Hall2, 3:Stage, 4:Plate) CVP-203 O CVP-205 O CVP-207 O CVP-209 O	X	X	O	O					O (Sound Creator)	O (Sound Creator)	X	O	O	X
Natural Voice Chorus Type	F0 43 73 01 31 0n 01 dd F7 00000001 01= Model ID (Clavinova common ID) 00110001 31= Natural Voice Exclusive data 0000nnnn 0n= Channel No. (Always 00) 00000001 01= Natural Voice Chorus Type Substatus 0ddddddd dd= data (0:Chorus,1:Celeste, 2:Flanger) CVP-203 O CVP-205 O CVP-207 O CVP-209 O	X	X	O	O					O (Sound Creator)	O (Sound Creator)	X	O	O	X
Natural Voice Variation Type	F0 43 73 01 31 0n 02 dd F7 00000001 01= Model ID (Clavinova common ID) 00110001 31= Natural Voice Exclusive data 0000nnnn 0n= Channel No. (Always 00) 00000010 00= Natural Voice Variation Type Substatus 0ddddddd dd= data (00H:DelayLCR, 01H:DelayLR, 02H:Echo, 03H:CrossDelay, 04H:Symphonic, 05H:RotarySpeaker, 06H:Tremolo, 07H:VibeRotor, 08H:AutoPan, 09H:Phaser, 0AH:AutoWah, 0BH:SoundBoardRev, 0CH:Off) CVP-203 O CVP-205 O CVP-207 O CVP-209 O	X	X	O	O					O (Sound Creator)	O (Sound Creator)	X	O	O	X
Natural Voice Vibe Rotor Control	F0 43 73 01 31 0n 08 dd F7 00000001 01= Model ID (Clavinova common ID) 00110001 31= Natural Voice Exclusive data 0000nnnn 0n= Channel No. (Always 00) 00001000 08= Natural Voice Vibe Rotor Control Substatus 0ddddddd dd= data (00H:Off, 7FH:On) CVP-203 O CVP-205 O CVP-207 O CVP-209 O	X	X	O (If the Type is set to Vibe Rotor)	O					O (Sound Creator)	O (Sound Creator)	X	X	O	X

MIDI Event	Data Format	Corresponding Voice/Part			MIDI Reception (effective or not for each part)					MIDI Reception (affecting the panel)	MIDI Transmission (generated data)				
		Regular/ Organ Voice	Mic/Vocal Harmony	Natural Voice	Song	Main Layer Left	Keyboard	Style	Extra		Panel (main generation method)	M.Pad	Style	Song	MIDI
Natural Voice Variation Send Level	F0 43 73 01 50 11 0n 00 dd F7 00000001 01= Model ID (Clavinova common ID) 01010000 50= Common Model data 00010001 11= Song Track related 0000nnnn 0n= Channel No. 00000000 00= Natural Voice Variation Send Level Substatus 0ddddddd dd= data (00H~7FH) CVP-203 O CVP-205 O CVP-207 O CVP-209 O	X	X	O	O	O	X	O	O	O (Mixing Console)	O (Mixing Console)	X	O	O	X
Natural Voice Dry Level	F0 43 73 01 50 11 0n 01 dd F7 00000001 01= Model ID (Clavinova common ID) 01010000 50= Common Model data 00010001 11= Song Track related 0000nnnn 0n= Channel No. 00000001 01= Natural Voice Dry Level Substatus 0ddddddd dd= data (00H~7FH) CVP-203 O CVP-205 O CVP-207 O CVP-209 O	X	X	O	O	O	X	O	O	O (Mixing Console)	O (Mixing Console)	X	O	O	X

System Exclusive Messages Special Operators

MIDI Event	Data Format	Corresponding Voice/Part			MIDI Reception (effective or not for each part)					MIDI Reception (affecting the panel)	MIDI Transmission (generated data)				
		Regular/ Organ Voice	Mic/Vocal Harmony	Natural Voice	Song	Main Layer Left	Keyboard	Style	Extra		Panel (main generation method)	M.Pad	Style	Song	MIDI
Volume & Expression & Pan Realtime control off (Voice Reserve)	F0 43 73 01 11 0n 45 dd F7 11110000 F0= Exclusive status 01000011 43= YAMAHA ID 01110011 73= Clavinova ID 00000001 01= Model ID (Clavinova common ID) 00010001 11= Special Operators 0000nnnn 0n= Channel No. 01000101 45= Volume & Expression Control No. Substatus 0ddddddd dd= data (00H : Realtime On, 7FH : Realtime Off) 11110111 F7= End of Exclusive	O	-	O	O	X	X	X	X	X	X	X	X	O	X
MIDI Key LED Mode On Off	F0 43 73 01 11 0n 47 dd F7 11110000 F0= Exclusive status 01000011 43= YAMAHA ID 01110011 73= Clavinova ID 00000001 01= Model ID (Clavinova common ID) 00010001 11= Special Operators 0000nnnn 0n= Channel No. 01000111 47= MIDI Key LED Mode On Off Substatus 0ddddddd dd= data 00H : Key LED Mode Off 01H : Key LED Mode On+no notes sound 02H : Key LED Mode On+notes sound 11110111 F7= End of Exclusive When Key LED Mode is set to On, key note on messages via designated channnel turns the LED on/off. 9n, note, Vel=0 : off 9n, note, Vel=1 : flush 9n, note, Vel=2~: on When selecting whether notes sound or not, you should turn off the Key LED Mode once. CVP-203 O CVP-205 O CVP-207 O CVP-209 O	-	-	-	-	-	-	-	-	O (Keyboard LED lights when receiving the note messages)	X	X	X	X	X

System Exclusive Messages Special Operators (Vocal Harmony Additional Parameters)

MIDI Event	Data Format	Corresponding Voice/Part			MIDI Reception (effective or not for each part)					MIDI Reception (affecting the panel)	MIDI Transmission (generated data)				
		Regular/ Organ Voice	Mic/Vocal Harmony	Natural Voice	Song	Main Layer Left	Keyboard	Style	Extra		Panel (main generation method)	M.Pad	Style	Song	MIDI
Vocal Harmony Pitch to Note ON/OFF	F0 43 73 01 11 0n 50 00 ss F7 11110000 F0= Exclusive status 01000011 43= YAMAHA ID 01110011 73= Clavinova ID 00000001 01= Model ID (Clavinova common ID) 00010001 11= Special Operators 0000nnnn 0n= Channel No. (Always 00) 01010000 50= Vocal Harmony Additional Parameter Control No. 00000000 00= Pitch to Note Parameter No. 0ddddddd dd= data (00H : Off, 01H : On) 11110111 F7= End of Exclusive CVP-203 X CVP-205 X CVP-207 O CVP-209 O	X	O	X	X	X	X	X	X	O (Vocal Harmony Edit)	O (Vocal Harmony Edit)	X	X	O	X
Vocal Harmony Pitch to Note Part	F0 43 73 01 11 00 50 01 ss F7 11110000 F0= Exclusive status 01000011 43= YAMAHA ID 01110011 73= Clavinova ID 00000001 01= Model ID (Clavinova common ID) 00010001 11= Special Operators 0000nnnn 0n= Channel No. (Always 00) 01010000 50= Vocal Harmony Additional Parameter Control No. 00000001 01= Pitch to Note Part Parameter No. 0ddddddd dd= data 00H : Main 01H : Layer 02H : Left 04H : Upper 11110111 F7= End of Exclusive CVP-203 X CVP-205 X CVP-207 O CVP-209 O	X	O	X	X	X	X	X	X	O (Vocal Harmony Edit)	O (Vocal Harmony Edit)	X	X	O	X
Vocal Harmony Vocoder Part (Harmony Part (Panel))	0 43 73 01 11 00 50 10 ss F7 11110000 F0= Exclusive status 01000011 43= YAMAHA ID 01110011 73= Clavinova ID 00000001 01= Model ID (Clavinova common ID) 00010001 11= Special Operators 0000nnnn 0n= Channel No. (Always 00) 01010000 50= Vocal Harmony Additional Parameter Control No. 00010000 10= Vocoder Part Parameter No. 0ddddddd dd= data 00H : Off 01H : Upper 02H : Lower 11110111 F7= End of Exclusive CVP-203 X CVP-205 X CVP-207 O CVP-209 O	X	O	X	X	X	X	X	X	O (Mic Setting)	O (Mic Setting)	X	X	O	X

System Exclusive Messages (Others)

MIDI Event	Data Format	Corresponding Voice/Part			MIDI Reception (effective or not for each part)					MIDI Reception (affecting the panel)	MIDI Transmission (generated data)				
		Regular/ Organ Voice	Mic/Vocal Harmony	Natural Voice	Song	Main Layer Left	Keyboard	Style	Extra		Panel (main generation method)	M.Pad	Style	Song	MIDI
MIDI Master Tuning	F0 43 1n 27 30 00 00 mm ll cc F7 11110000 F0= Exclusive status 01000011 43= YAMAHA ID 0001nnnn 1nn= always 0(when transmit), n=0-F(when receive) 00100111 27= Model ID of TG100 00110000 30= Address High 00000000 00= Address Mid 00000000 00= Address Low 0000mmmm 0m= Master Tune MSB 0000llll 0l= Master Tune LSB 0ccccccc cc= don't care 11110111 F7= End of Exclusive	O	X	O	O					O (Function)	X	X	X	X	X

Clavinova®

CVP-203

PARTS LIST

CONTENTS

OVERALL ASSEMBLY ····· 2
MAIN UNIT ····· 4
PANEL ASSEMBLY ····· 8
GL CASE ASSEMBLY ····· 11
LCD ASSEMBLY ····· 12
TOP BOARD ASSEMBLY ····· 13
MUSIC REST ASSEMBLY ····· 14
KEY COVER ASSEMBLY ····· 15
ARM ASSEMBLY ····· 16
FDD UNIT ····· 17
HEADPHONES JACK ASSEMBLY ····· 18
D-JACK ASSEMBLY ····· 19
A-JACK ASSEMBLY ····· 20
SIDE BOARD ASSEMBLY ····· 21
PEDAL BOX ASSEMBLY ····· 22
PEDAL ASSEMBLY ····· 23
MA60 ASSEMBLY ····· 24
FU60 ASSEMBLY ····· 25
KEYBOARD ASSEMBLY ····· 26
BENCH (BC-201DR) ····· 28
BENCH (BC-100DR) ····· 29
ELECTRICAL PARTS ····· 30~45

Notes: DESTINATION ABBREVIATIONS

A:	Australian model	M:	South African model
B:	British model	O:	Chinese model
C:	Canadian model	Q:	South-east Asia model
D:	German model	T:	Taiwan model
E:	European model	U:	U.S.A. model
F:	French model	V:	General export model (110 V)
H:	North European model	W:	General export model (220 V)
I:	Indonesian model	N,X:	General export model
J:	Japanese model	Y:	Export model

WARNING

Components having special characteristics are marked ⚠ and must be replaced with parts having specification equal to those originally installed.

- The numbers in " QTY " show quantities for each unit.
- The parts with " - - " in " **PART NO.** " are not available as spare parts.
- The mark " } " in the remarks column indicates that these parts are interchangeable.
- The second letter of the shaded ( ) part number is O, not zero.
- The second letter of the shaded ( ) part number is I, not one.

■ OVERALL ASSEMBLY

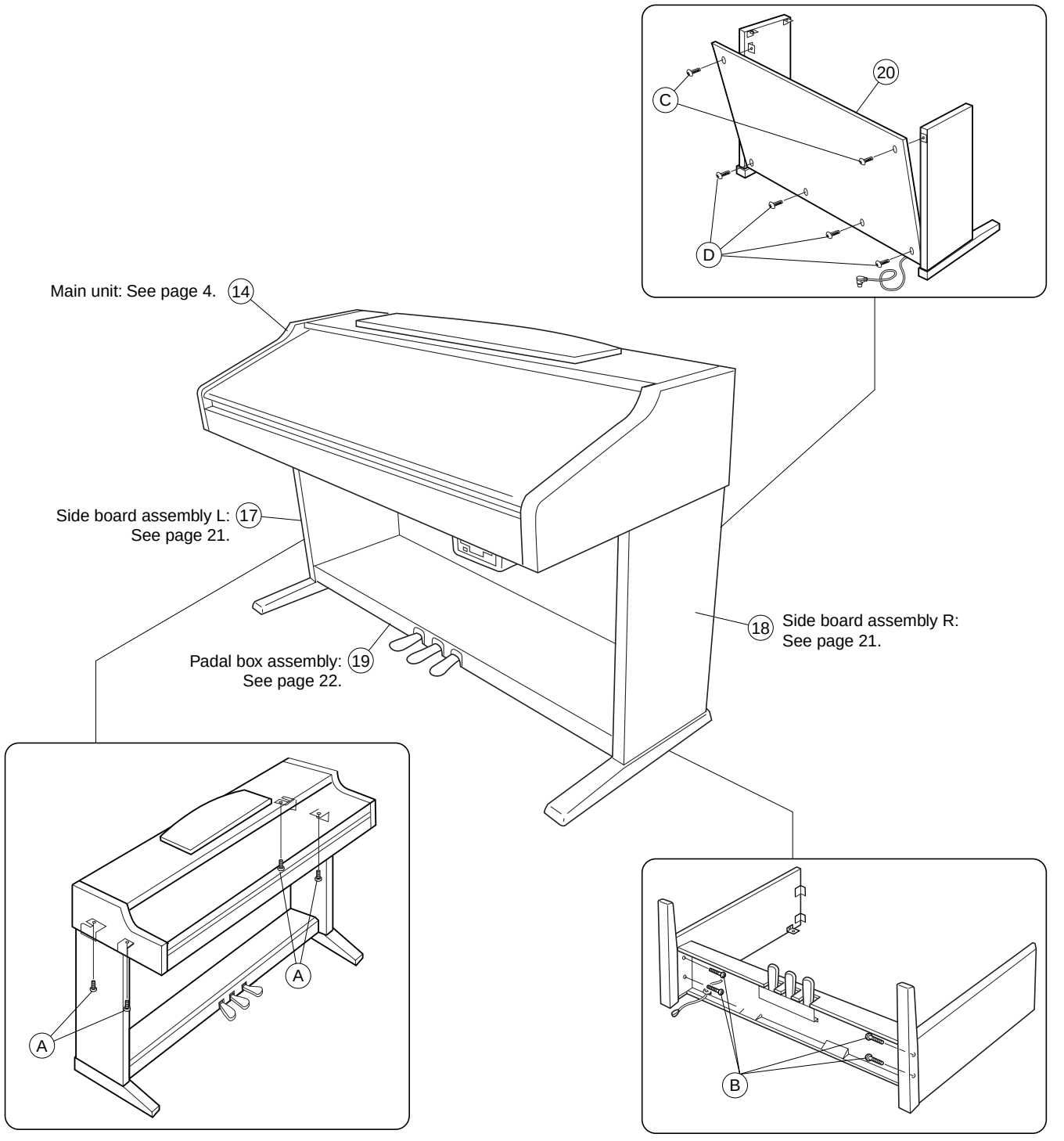

	REF NO.	PART NO.	DESCRIPTION			REMARKS		QTY	RANK
			OVERALL ASSEMBLY			CVP-203			
	14	- -	Main Unit			J	(V714670)		
	14	- -	Main Unit			U	(V756020)		
	14	- -	Main Unit			E,B	(V756030)		
	14	- -	Main Unit			N	(V756040)		
*	17	**V7143000**	Side Board Assembly L	LEFT					
*	18	**V7143200**	Side Board Assembly R	RIGHT					
	19	- -	Pedal Box Assembly				(V713720)		
*	20	**V7522800**	Back Board Assembly	ROSE/BLACK					
			ACCESSORIES						
⚠		**VT015700**	AC Cord Set	J 2P 2.5m 7A		J			05
⚠		**VT015800**	AC Cord Set	U 2P 2.44m 7A		U			06
⚠		**VT015900**	AC Cord Set	E 2P 2.5m		E,N			05
⚠		**VT016000**	AC Cord Set	B 2P 2.5m		B			08
		- -	Bench	BC-201DR		J	(V802960)		
		- -	Bench	BC-100DR		U,N	(V553140)		
		V5771000	Headphone	059711		J			07
*		**X0206A00**	Floppy Disk	MUSIC FINDER FD		J			03
*		**X0173A00**	Floppy Disk	PIANO 50PIECE U/E		U,E,B,N			03
		V2384100	Floppy Disk	3.50inch 2000K					03
		V5283500	Screw Set						03
⚠		**VK726100**	Connector	CCT5902		N			03
		V5283500	Screw Set						03
		VR410300	Cord Clamp Set						03
	A	**EG360020**	Bind Head Screw	6.0X16 MFZN2BL				4	01
	B	**VQ448400**	Truss Head Screw	6.0X25 MFZN2BL				4	01
	C	**VP367300**	Truss Head Screw	4.0X12 MFZN2BL				2	01
	D	**03747290**	Truss Head Tapping Screw-1	4.0X20 MFZN2BL				4	01
			JIGS						
		TX000670	Rod						

*: New Parts

RANK: Japan only

• Bottom view

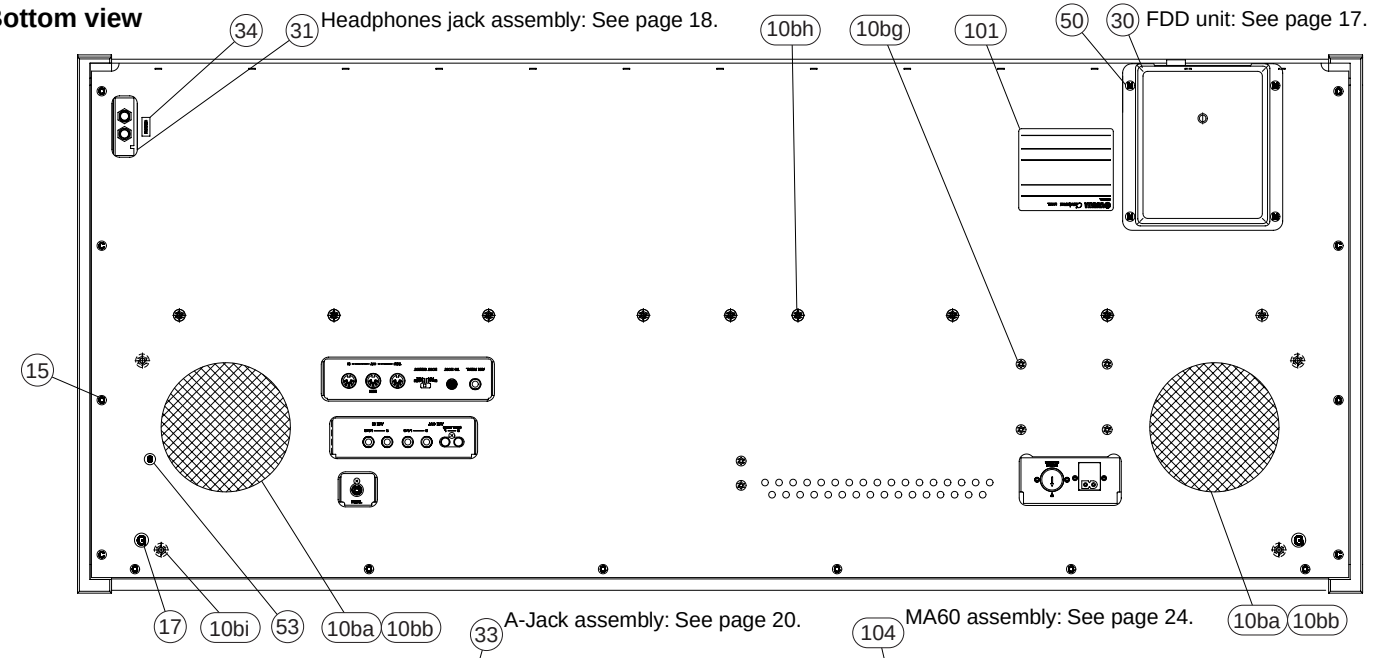

LOCATION	SYMBOL
106	V
103	U
72	T
53	S
51	Q
50	N
27	K
18	H
17	G
15	C
3	B
2	A



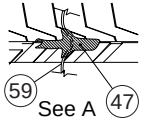

• Top view

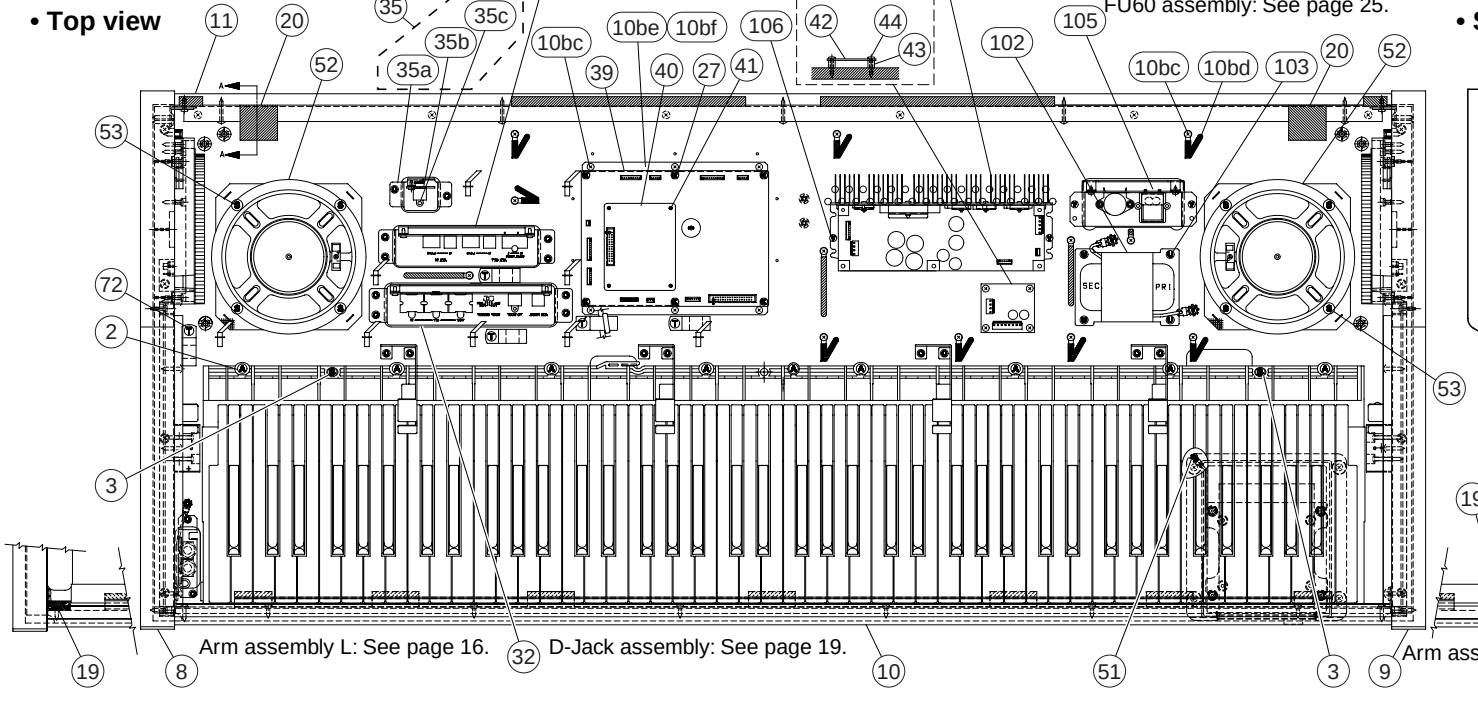

• Side view

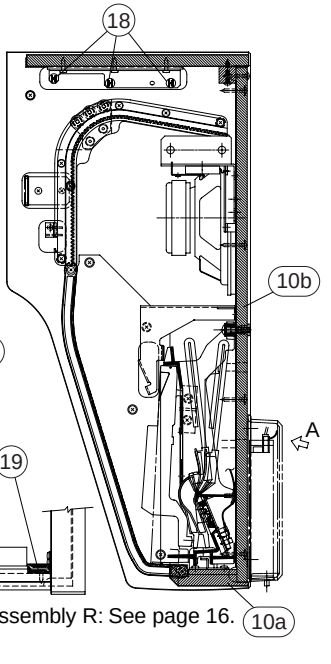

• Rear view

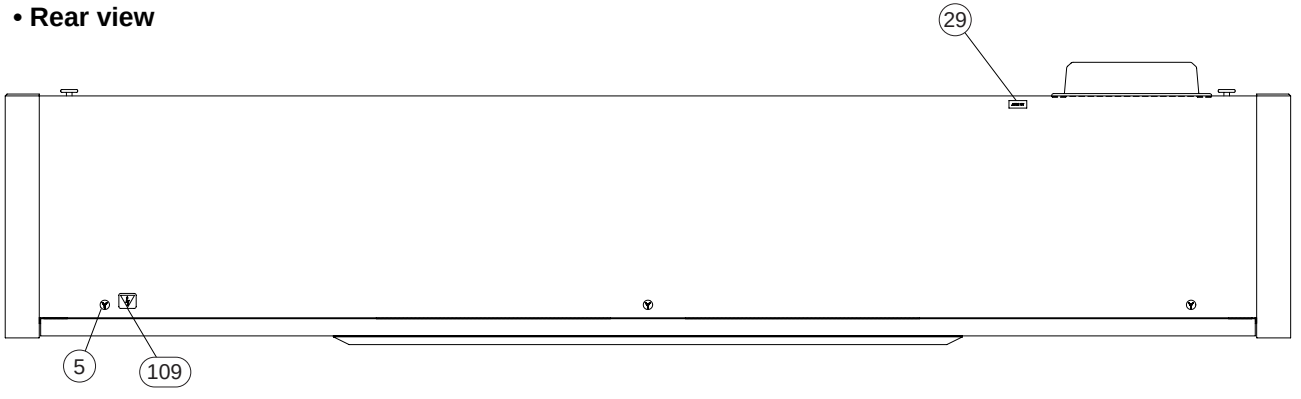

• Speaker assembly L, R

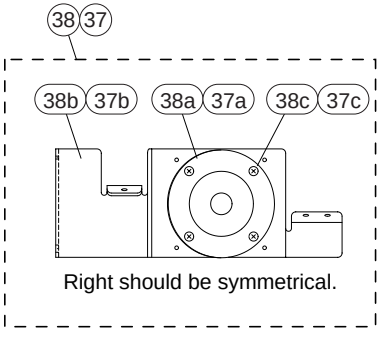

• Top view

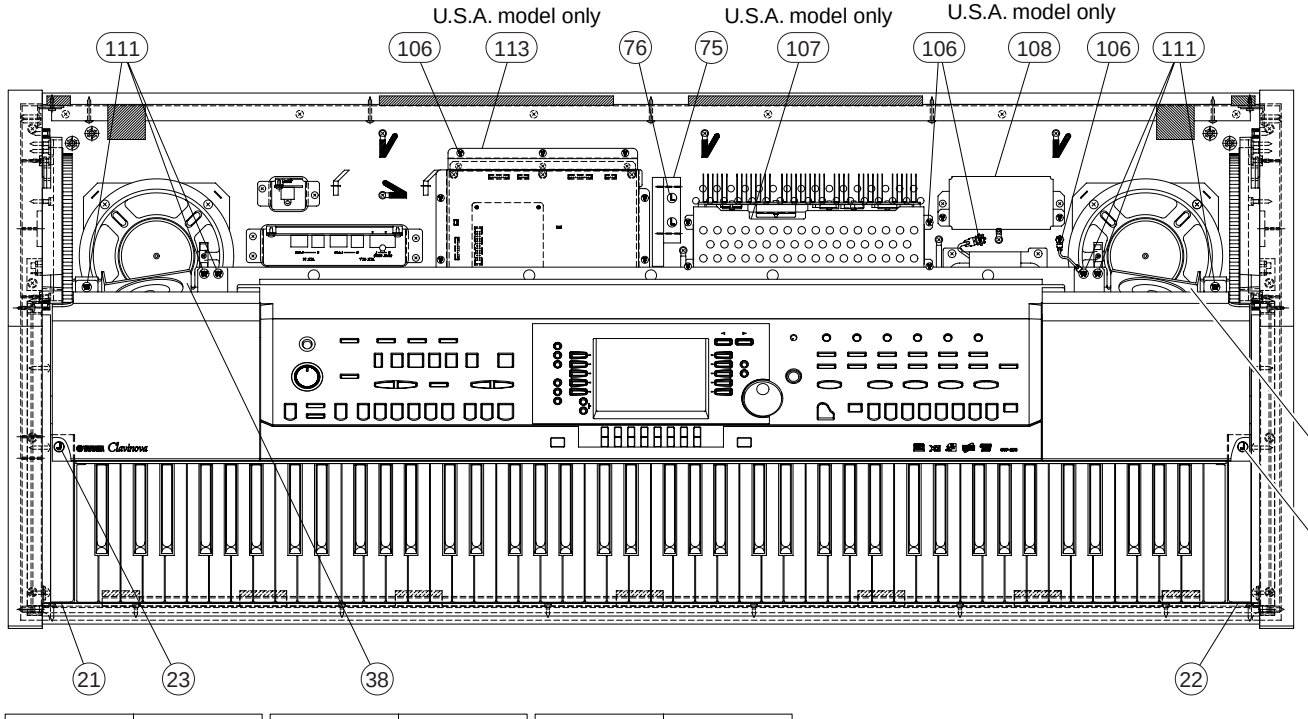

• Side view

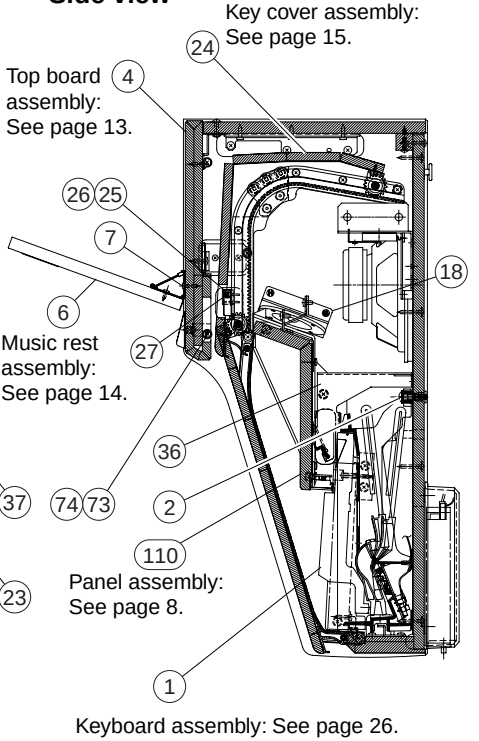

Keyboard assembly: See page 26.

LOCATION	SYMBOL
111	W
106	V
76	L

LOCATION	SYMBOL
74	F
51	Q
27	K

LOCATION	SYMBOL
23	J
18	H
5	Y

	REF NO.	PART NO.	DESCRIPTION			REMARKS		QTY	RANK
			MAIN UNIT			CVP-203			
		- -	Main Unit			J	(V714670)		
		- -	Main Unit			U	(V756020)		
		- -	Main Unit			E,B	(V756030)		
		- -	Main Unit			N	(V756040)		
	70	- -	GND Wire	L=180		U	(V756950)	2	
	100	- -	Main Unit Sub Assembly				(V713910)		
	101	- -	Name Plate			J	(V713880)		
	101	- -	Name Plate			U	(V756070)		
	101	- -	Name Plate			E,B	(V756100)		
	101	- -	Name Plate			N	(V756160)		
⚠	102	**XQ429B00**	Power Transformer	GA-60J		J			12
	102	**VU326500**	Power Transformer Assembly	UL CSA		U			16
⚠	102a	**XQ430C00**	Power Transformer	29WP243 UL/CSA		U			11
	102b	- -	GND Wire			U	(VG29670)	2	
	102c	**EP600130**	Bind Head Tapping Screw-B	3.0X6 MFZN2Y		U		2	01
	102d	**VA121600**	Bushing			U		4	01
	102e	**VK431100**	FDD Spacer			U		4	01
	102f	**VA121400**	Spacer			U		4	02
⚠	102	**XQ431B00**	Power Transformer	GA-60 E IEC65		E,B			12
⚠	102	**XQ432B00**	Power Transformer	GA-60 N		N			14
	103	**EG340210**	Bind Head Screw	4.0X14 MFZN2Y		J,E,B,N		4	01
	103	**VL445800**	Truss Head Screw	4.0X20 MFZN2Y		U		4	01
	104	**VT144300**	MA60 Assembly			J,U			
	104	**VT144400**	MA60 Assembly			E,B,N			
	105	**VT152000**	FU60 Assembly			J			10
	105	**VT152100**	FU60 Assembly			U			10
	105	**VT152200**	FU60 Assembly			E,B			10
	105	**VT153300**	FU60 Assembly			N			12
	106	**EP030240**	Bind Head Tapping Screw-1	3.5X12 MFZN2Y		J,E,B,N		4	01
	106	**EP030240**	Bind Head Tapping Screw-1	3.5X12 MFZN2Y		U		20	01
	107	**VT475700**	Cover, MA	SECC-T1 T0.8		U			07
	108	**VU348800**	Cover, FU			U			06
	109	**VB951400**	Graphic Mark	UL		U			03
	110	- -	Panel Assembly			J	(V800910)		
	110	- -	Panel Assembly			U	(V717470)		
	110	- -	Panel Assembly			E,B,N	(V717460)		
	113	- -	DM Cover Assembly			U	(V780050)		
	114	- -	Electrical Adhesive Tape	40X20m NO.7701		U	(V604530)		
	115	**VP834600**	Adhesive Tape	12X50		U			02
		- -	Main Unit Sub Assembly				(V713910)		
*	1	**V7803300**	Keyboard Assembly	GHD_CL88					
	2	**VV040700**	Pan Head Screw	PW B5.0X25 MFZN2				9	01
	3	**EP040230**	Bind Head Tapping Screw-1	4.0X14 MFZN2Y				2	01
*	4	**V7139200**	Top Board Assembly						
*	5	**V6207400**	Truss Head Screw	4.0X16 MFZN2BL				3	01
*	6	**V7420200**	Music Rest Assembly						
	7	**EP030310**	Bind Head Tapping Screw-1	3.0X16 MFZN2BL				4	01
*	8	**V7115800**	Arm Assembly L	LEFT					
*	9	**V7116000**	Arm Assembly R	RIGHT					
*	10	**AAX25750**	Keybed & F. Rail Assembly	(V712240+V711960)					
	10a	- -	Front Rail Assembly				(V711960)		
	10b	- -	Keybed Assembly				(V712240)		
	10ba	**VF823100**	Metal Net					2	03
	10bb	- -	Cushion	480X6			(VT47930)	2	
	10bc	**EP030240**	Bind Head Tapping Screw-1	3.5X12 MFZN2Y				18	01
	10bd	**CB817510**	Cord Binder	S-14B				12	03
	10be	- -	Holder, DM P.C.B.				(V747700)	2	
	10bf	- -	Spacer	t3.0			(V816750)	2	
	10bg	**VA789400**	Nut	B 4.0X11.5 MFZN2BL				6	01
	10bh	**VA127400**	Nut	B 5.0X12 MFZN2BL				9	01
	10bi	**V6008700**	Nut	B 6.0X12.5 MFZN2BL				6	01
*	11	**V7121000**	Back Top Board Assembly						
	15	**EN630190**	Truss Head Tapping Screw-1	3.5X25 MFZN2BL				14	01
	17	**VN887900**	Guide Screw	6X14				2	03
	18	**EP030190**	Bind Head Tapping Screw-1	3.5X16 MFZN2Y				14	01
	19	- -	Electrical Adhesive Tape	25X30 NO.7701			(V591400)	2	
	20	- -	Electrical Adhesive Tape	40X20m NO.7701			(V604530)		
*	21	**V7123200**	End Block Assembly L	LEFT					

*: New Parts

RANK: Japan only

	REF NO.	PART NO.	DESCRIPTION			REMARKS	QTY	RANK
*	22	**V7123400**	End Block Assembly R	RIGHT				
	23	**VA076400**	Truss Head Tapping Screw-1	3.5X30 MFZN2Y			2	01
*	24	**V7125000**	Key Cover Assembly					
*	25	**V7509600**	Rack Cover L	LEFT				
*	26	**V7509700**	Rack Cover R	RIGHT				
	27	**EP600250**	Bind Head Tapping Screw-B	3.0X8 MFZN2Y			8	01
	29	**VT501000**	Label	AC INLET				03
	30	**- -**	FDD Unit			(V706210)		
	31	**- -**	Headphones Jack Assembly			(VT15870)		
	31	**- -**	Headphones Jack Assembly			(V004750)		
	32	**- -**	D-JACK Assembly			(V708200)		
	33	**- -**	A-JACK Assembly			(V753650)		
	34	**- -**	Label, PHONES	CLAVI		(VS47810)		
	35	**- -**	PK Connector Assembly			(V753580)		
*	35a	**V7585400**	Angle, PK Connector					05
	35b	**V6366400**	Circuit Board	PEDAL (D-JACK)				
	35c	**EP600190**	Bind Head Tapping Screw-B	3.0X8 MFZN2BL			2	01
	36	**- -**	Panel Holder	A-1		(V717400)	4	
	37	**- -**	Speaker Assembly R	RIGHT		(V715770)		
	37a	**XL455A00**	Speaker	5.0cm 16 ohm 60W		MONITOR		07
	37b	**- -**	Speaker Holder R	A-RIGHT		(V715790)		
	37c	**EP600190**	Bind Head Tapping Screw-B	3.0X8 MFZN2BL			4	01
	38	**- -**	Speaker Assembly L	LEFT		(V715740)		
	38a	**XL455A00**	Speaker	5.0cm 16 ohm 60W		MONITOR		07
	38b	**- -**	Speaker Holder L	A-LEFT		(V715780)		
	38c	**EP600190**	Bind Head Tapping Screw-B	3.0X8 MFZN2BL			4	01
*	39	**V7166300**	Circuit Board	DM				
*	40	**V7161600**	Circuit Board	SWX				
	41	**VU264400**	Board Spacer				4	03
	42	**V2403300**	Circuit Board	NET1				
	43	**CB040950**	Spacer				4	03
	44	**EP030470**	Bind Head Tapping Screw-1	3.5X20 MFZN2Y			4	01
	47	**VP834600**	Adhesive Tape	12X50			14	02
	48	**- -**	Adhesive Tape	12X100		(V296190)	2	
	49	**CB069250**	Cord Holder	BK-1			2	01
	50	**EP030250**	Bind Head Tapping Screw-1	3.5X14 MFZN2BL			4	01
	51	**EP030240**	Bind Head Tapping Screw-1	3.5X12 MFZN2Y			22	01
*	52	**X0203A00**	Speaker	16cm 6 ohm 40W		WOOFER	2	
	53	**20338800**	Truss Head Tapping Screw-1	4.0X20 MFZN2Y			8	01
	54	**- -**	Connector Assembly	+5V-LF 7P-550		(V807500)		
	55	**- -**	Connector Assembly	KRD-KRD 5P-300		(VK10560)		
	56	**- -**	Connector Assembly	DJACK-LF 10P-550		(V807520)		
	58	**- -**	Connector Assembly	AJACK-LF 12P-600		(V807510)		
*	59	**V7565100**	Connector Assembly	MK-LF 8P-500				
	60	**- -**	Connector Assembly	KRD-KRD 9P-550		(VK11390)		
	61	**- -**	Connector Assembly	HP-LF 7P-750		(V807490)		
*	63	**V7530900**	Connector Assembly	FDD-SIG 34P FLAT				
*	64	**V4269800**	Connector Assembly	FDD POWER 3P L=530				
	65	**- -**	Connector Assembly	PU-NW VH-4P-400		(V753110)		
	66	**- -**	Connector Assembly	SP VH-8P-950		(V753130)		
	72	**EN630230**	Truss Head Tapping Screw-1	3.5X14 MFZN2Y			5	01
	73	**CB033070**	Stopper				2	03
	74	**EM040080**	Flat Head Tapping Screw-1	4.0X20 MFZN2Y			2	
	75	**- -**	CP Stopper Assembly			(V806930)		
	76	**V5877100**	Truss Head Screw	4.0X30 MFZN2Y			2	
	111	**EP640130**	Bind Head Tapping Screw-B	4.0X10 MFZN2Y			6	01

*: New Parts

RANK: Japan only

• **Top view**

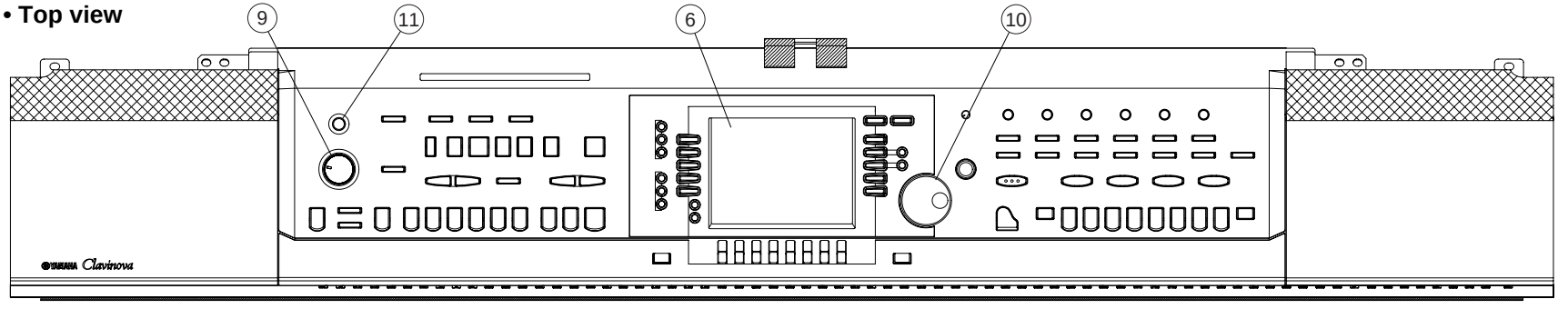

• **Bottom view**

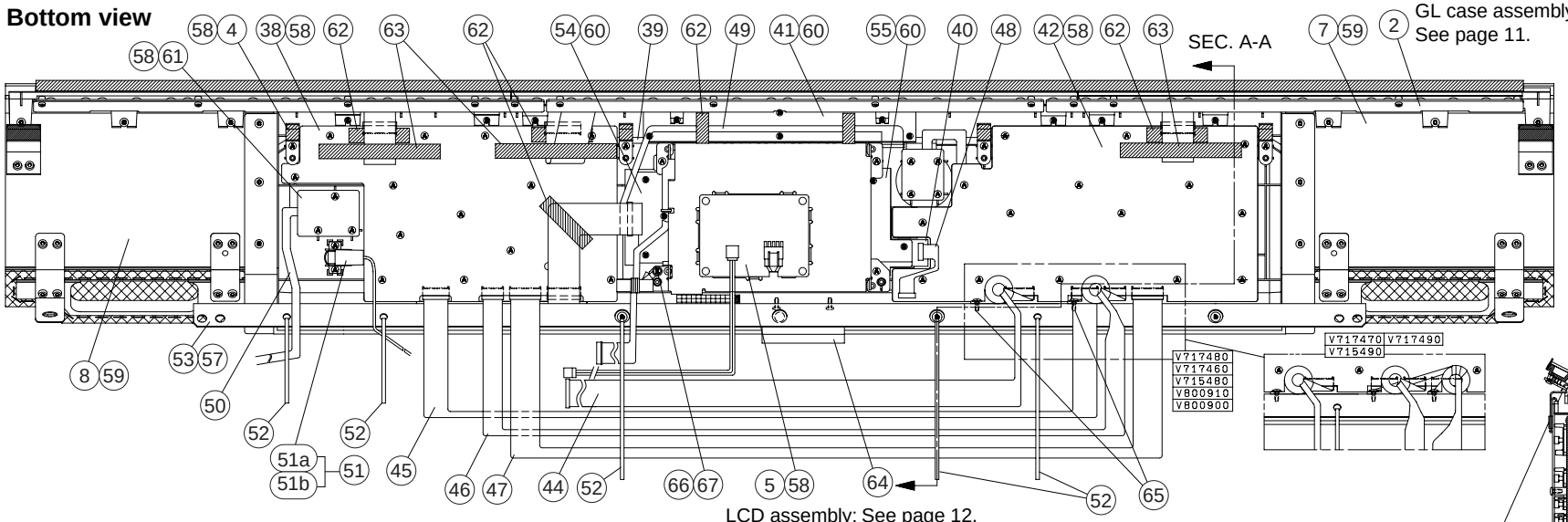

• **Bottom view**

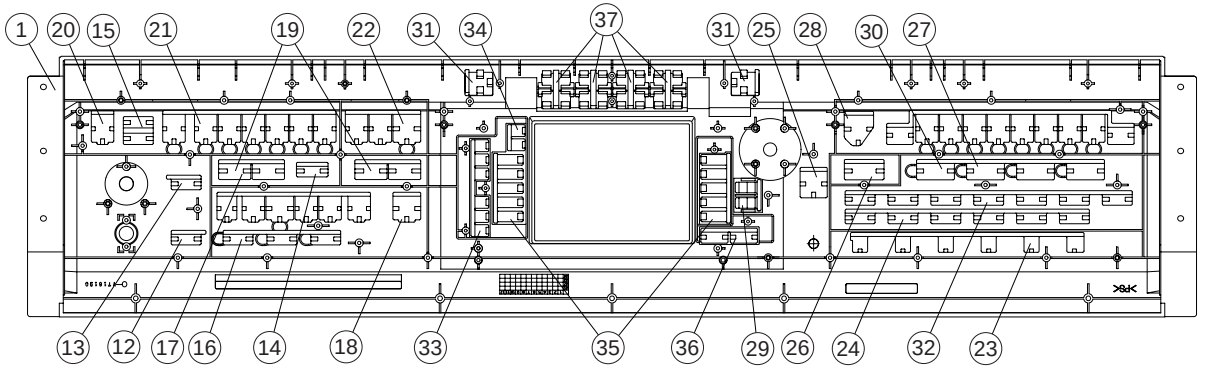

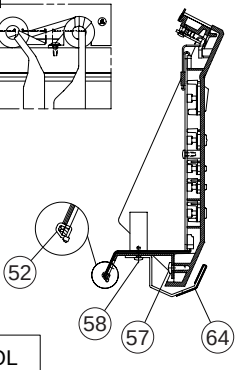

LOCATION	SYMBOL
66	E
57	D
59	C
60	B
58	A

	REF NO.	PART NO.	DESCRIPTION			REMARKS	QTY	RANK
			PANEL ASSEMBLY			CVP-203		
		- -	Panel Assembly			J (V800910)		
		- -	Panel Assembly	U		U (V717470)		
		- -	Panel Assembly			E,B,N (V717460)		
*	1	**V8008900**	Control Panel			J		
*	1	**V7175600**	Control Panel			U,E,B,N		
	2	- -	GL Case Assembly			(V756820)		
	4	**VV651600**	CP Holder Assembly				4	04
	5	- -	LCD Assembly			J,E,B,N (V758610)		
	5	- -	LCD Assembly			U (V758620)		
*	6	**V8009200**	LCD Cover			J		
*	6	**V7162400**	LCD Cover			U,E,B,N		10
*	7	**V7160000**	Panel Sub Assembly R	RIGHT				
*	8	**V7159900**	Panel Sub Assembly L	LEFT				
	9	**VU432400**	Knob Black			MASTER VOLUME		01
	10	**VQ664100**	Encoder Knob Black			DATA ENTRY		02
*	11	**V7151200**	Push Knob Black			POWER ON/OFF		01
*	12	**V7137100**	Push Button Green	1A		METRONOME(START/STOP)		
*	13	**V7137300**	Push Button Gray	1B		FADE IN/OUT		
*	14	**V7137400**	Push Button Brown	1C		TEMPO(TAP TEMPO)		
*	15	**V7137600**	Push Button Dark Gray	1D x2		STYLE(AUTO FIL IN, OTS LINK)		
*	16	**V7137800**	Push Button Gray	2 x3		SONG(EXTRA TRACKS,TRACK2, TARCK1)		
*	17	**V7512100**	Push Button Red/Green/Gray	3 x6		SONG(REC,TOP,START/STOP, REW,FF,REPEAT)		
*	18	**V7138100**	Push Button Umber	4		SONG(GUIDE)		
*	19	**V7512500**	Push Button Brown	5 x2		TEMPO(+/-),TRANSPOSE(+/-)	2	
*	20	**V7138300**	Push Button Dark Gray	6		STYLE(ACMP)		
*	21	**V7512800**	Push Button Brown	7 x7		STYLE(BREAK,INTRO,MAIN, ENDING/rlt.)		
*	22	**V7512900**	Push Button Brown	8 x3		STYLE(SYNC.STOP, SYNC.START,START/STOP)		
*	23	**V7138700**	Push Button Gray	9 x6		VOICE EFFECT(REVERB,DSP, VARIATION,HARMONY/ECHO, MONO,LEFT HOLD)	6	
*	24	**V7138900**	Push Button Gray	10x6		VOICE(PIANO&HARPSI., E.PIANO,ORGAN&ACCORDION, PERCUSSION,GUITAR,BASS)		
*	25	**V7139000**	Push Button Dark Gray	11		ENTER		
*	26	**V7139300**	Push Button Gray	12		MUSIC FINDER		
*	27	**V7513000**	Push Button Brown	13 x4		ONE TOUCH SETTING(1-4)		
*	28	**V7139600**	Push Button Brown	14		PIANO		
*	29	**V7139700**	Push Button White	15		LAYER,LEFT		
*	30	**V7140000**	Push Button Dark Gray/Red	16 x10		REGISTRATION MEMORY	2	
*	31	**V7140200**	Push Button Dark Gray	17		(FREEZE,1-8,MEMORY) DIRECT ACCESS,EXIT	2	
*	32	**V7140400**	Push Button Gray	18 x7		VOICE(BRASS,WOODWIND, STRINGS,CHOIR&PAD,SYNTH., XG,USER)		
*	33	**V7140500**	Push Button Umber/Beige	19 x6		MENU(DEMO,HELP,FUNCTION), DIGITAL STUDIO(SOUND CREATOR,DIGITAL RECORDING, MIXING CONSOLE)		
*	34	**V7141000**	Push Button Gray	21 x2		BALANCE,CHANNEL ON/OFF		
*	35	**V7141400**	Push Button Gray	23 x5		LCD select(A-J)	2	
*	36	**V7141600**	Push Button Gray	25 x2		BACK,NEXT		
*	37	**V8012400**	Push Button Gray	27 x2		LCD select(1-8)	4	
*	38	**V7134600**	Circuit Board	PNL				
*	39	**V7134800**	Circuit Board	PNCL				
*	40	**V7134900**	Circuit Board	PNCR				
*	41	**V7135100**	Circuit Board	PNCB				
*	42	**V7135200**	Circuit Board	PNR				
	44	- -	Connector Assembly	PND-LF 11P-850		(V801150)		
	45	- -	Connector Assembly	KRD-KRD 10P-650		J,E,B,N (VK11700)		
	45	- -	Connector Assembly	PNL-LF 10P-650		U (V812710)		
	46	- -	Connector Assembly	PN-LF 8P-750		(V801160)		
	47	- -	Connector Assembly	KRD-KRD 12P-650		J,B,E,N (VK11720)		
	48	- -	Connector Assembly	KRD-KRD 6P-100		(VK09800)		
	49	- -	Connector Assembly	KRD3 13P L=150+300		(V753010)		

*: New Parts

RANK: Japan only

	REF NO.	PART NO.	DESCRIPTION			REMARKS	QTY	RANK
	50	- -	Connector Assembly	VOL L=400		(V222620)		
	51	- -	Power Switch Assembly	PSW 3P-1400		(V753040)		
⚠	51a	**VC843500**	Push Switch	SDDLB1216A J.U.C.S		POWER ON/OFF		03
	51b	**V5800800**	Switch Cover	IVORY				01
	52	**CB069250**	Cord Holder	BK-1			5	01
	53	- -	Panel Rail A			(V715860)		
	54	- -	Panel Holder L	PNCL A		(V750710)		
	55	- -	Panel Holder R	PNCR A		(V750720)		
	57	**EP600240**	Bind Head Tapping Screw-B	4.0X10 MFZN2BL			5	01
	58	**EP600190**	Bind Head Tapping Screw-B	3.0X8 MFZN2BL			48	01
	59	**EP030230**	Bind Head Tapping Screw-1	3.5X10 MFZN2Y			12	01
	60	**VB096700**	Bind Head Tapping Screw-B	2.6X8 MFZN2BL			17	01
*	61	**V7134700**	Circuit Board	MV				
	62	**VP834600**	Adhesive Tape	12X50			8	02
	63	- -	Adhesive Tape	12X100		(VV62740)	3	
	64	- -	Holder Assembly			(V803880)		
	65	**V2276900**	PW Head Tapping Screw-B	3.0X8-8 MFZN2BL		J,E,B,N	2	01
	65	**V2276900**	PW Head Tapping Screw-B	3.0X8-8 MFZN2BL		U	3	01
	66	**EP600140**	Bind Head Tapping Screw-B	3.0X10 MFZN2BL				01
	67	**CB817510**	Cord Binder	S-14B				03

*: New Parts

RANK: Japan only

■ GL CASE ASSEMBLY

• Top view

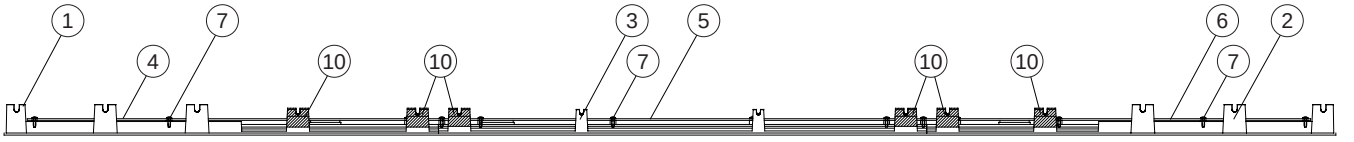

• Front view

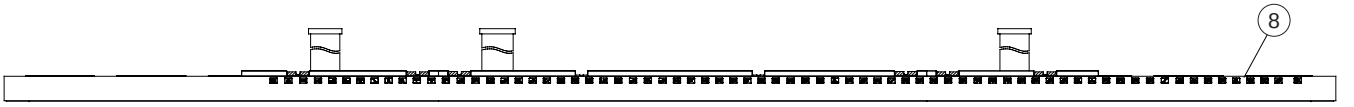

• Bottom view



	REF NO.	PART NO.	DESCRIPTION			REMARKS	QTY	RANK
		- -	GL CASE ASSEMBLY			CVP-203 (V756820)		
*	1	**V7162200**	GL Case L	LEFT				06
*	2	**V7162300**	GL Case R	RIGHT				06
*	3	**V7511800**	GL Case C	CENTER				07
*	4	**V7135800**	Circuit Board	GLL				
*	5	**V7135900**	Circuit Board	GLC				
*	6	**V7136100**	Circuit Board	GLR				
	7	**VB096700**	Bind Head Tapping Screw-B	2.6X8 MFZN2BL			14	01
	10	- -	Nonwoven Fabric Cloth	25X20X0.25		(V810600)	6	

*: New Parts

RANK: Japan only

■ LCD ASSEMBLY

• Bottom view

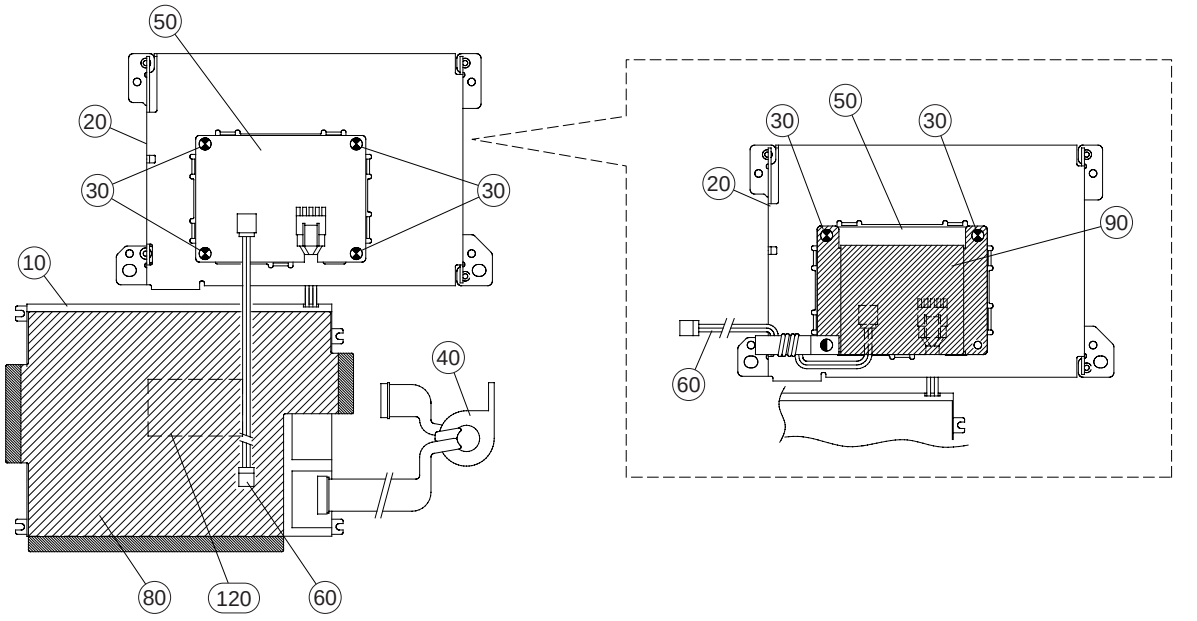

• Bottom view

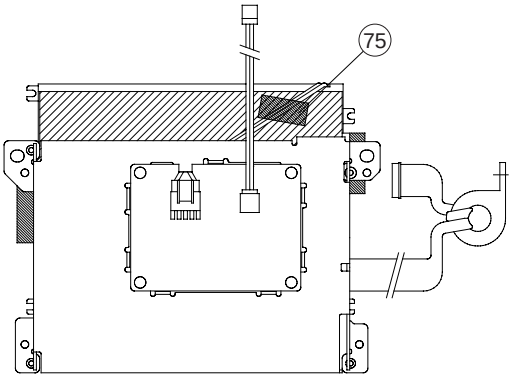

• Front view

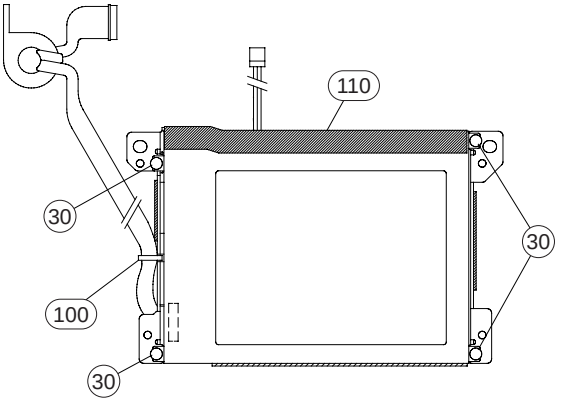

REF NO.	PART NO.	DESCRIPTION			REMARKS		QTY	RANK
		LCD ASSEMBLY			CVP-203			
	- -	LCD Assembly			J,E,B,N	(V758610)		
	- -	LCD Assembly	U		U	(V758620)		
10	**V3331300**	LCD	EDMMPU3BCF					23
20	**VV615000**	Angle Bracket, LCD						08
30	**EP600250**	Bind Head Tapping Screw-B	3.0X8 MFZN2Y		J,E,B,N		8	01
40	- -	Connector Assembly	LCD-LF 14P-450			(V801140)		
* 50	**V7170200**	Circuit Board	INV					
60	- -	Connector Assembly	BACK LIGHT 3P-450			(V753050)		
75	**VA119300**	Adhesive Tape	12X25					01
80	**VY859400**	Insulation Sheet						06
90	**VT361300**	Inverter Cover			U			06
100	**CB069250**	Cord Holder	BK-1					01
110	- -	Aluminium Tape	AT-80 30X50m			(VY85950)		
120	- -	Spacer Cushion	LC3000#2N			(VZ01110)		

*: New Parts

RANK: Japan only

■ TOP BOARD ASSEMBLY

• Side view

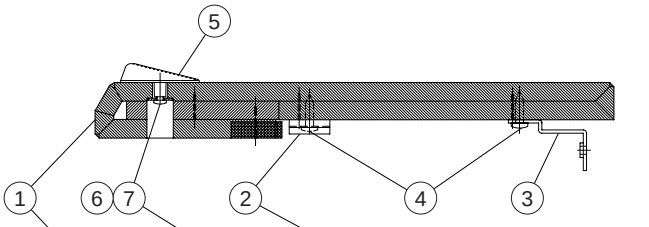

• Bottom view

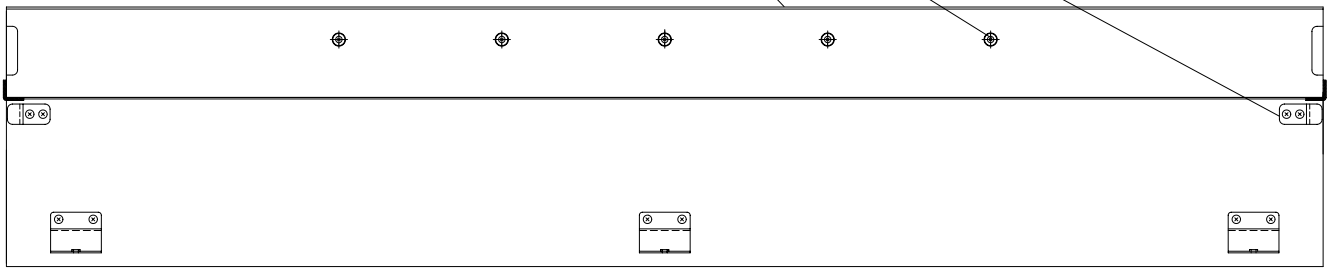

REF NO.	PART NO.	DESCRIPTION			REMARKS	QTY	RANK
*	**V7139200**	TOP BOARD ASSEMBLY			CVP-203		
1	**- -**	Top Board			(V713940)		
2	**VQ485700**	Holder, Top Board F	FRONT			2	03
3	**VQ485800**	Holder, Top Board R	REAR			3	05
4	**EP040170**	Bind Head Tapping Screw-1	4.0X16 MFZN2Y			10	01
5	**VY891000**	Stopper Rail, Music Score					12
6	**EP600270**	Bind Head Tapping Screw-P	3.0X10 MFZN2Y			5	01
7	**VK287600**	Flat Washer	4.0X12X1.0 MFZN2Y			5	01

*: New Parts

RANK: Japan only

■ MUSIC REST ASSEMBLY

• Bottom view

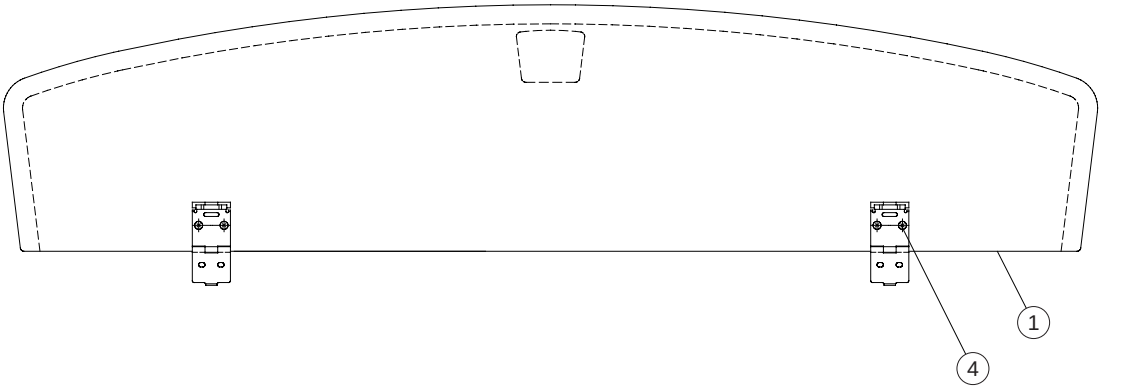

• Side view

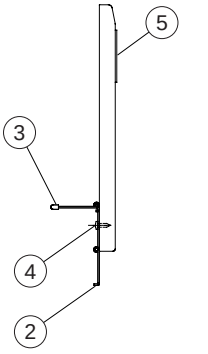

	REF NO.	PART NO.	DESCRIPTION			REMARKS	QTY	RANK
*		**V7420200**	MUSIC REST ASSEMBLY			CVP-203		
	1	**- -**	Music Rest			(V742070)		
*	2	**V8437600**	Hinge				2	
	3	**CB054920**	Cap Black				2	01
	4	**20404200**	Bind Head Tapping Screw-1	3.0X10 MFZN2BL			4	
	5	**V5782300**	Badge	BRASS				05

*: New Parts

RANK: Japan only

■ KEY COVER ASSEMBLY

• Bottom view

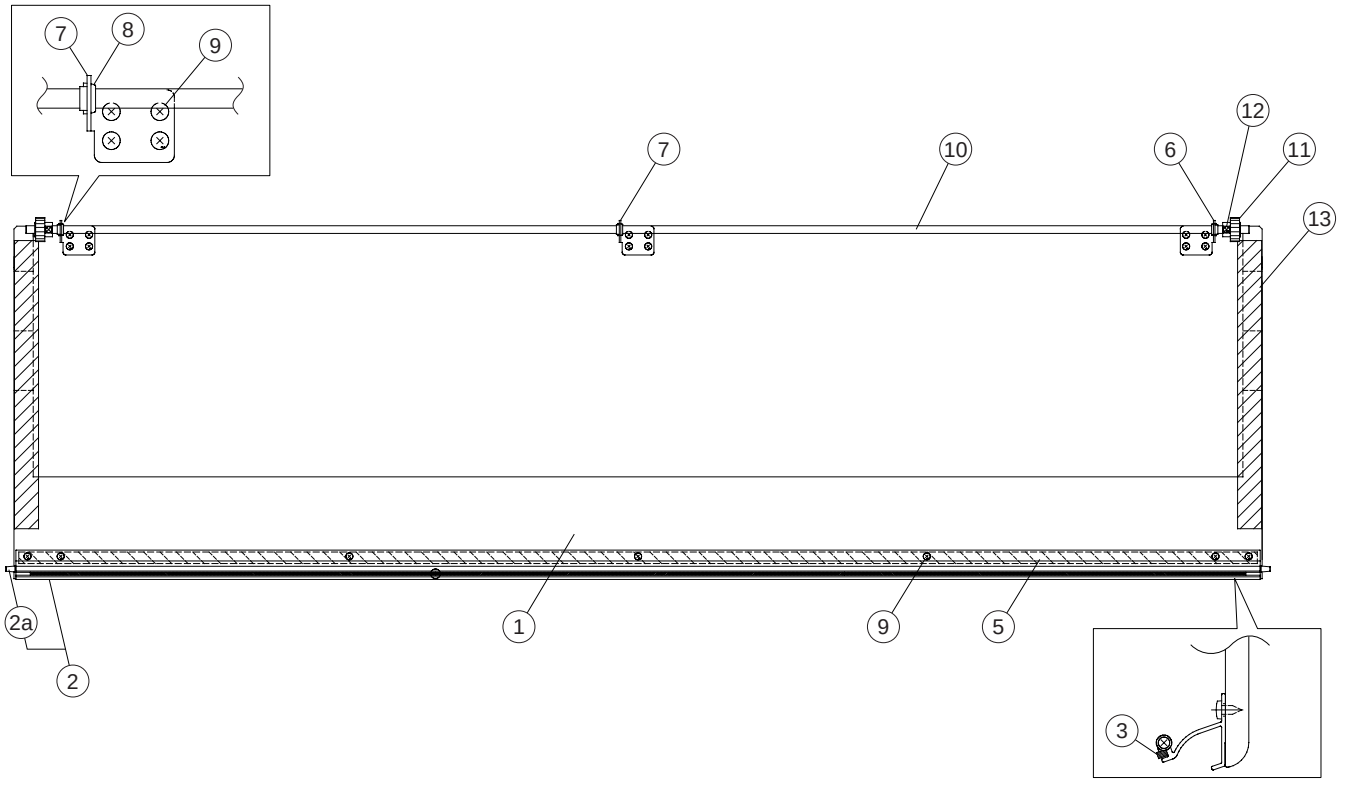

	REF NO.	PART NO.	DESCRIPTION			REMARKS	QTY	RANK
*		**V7125000**	KEY COVER ASSEMBLY			CVP-203		
	1	**- -**	Key Cover			(V712560)		
*	2	**V7125200**	Sash-F Assembly	FRONT				
	2a	**V4964400**	Guide Pin				2	
	3	**VU457600**	Cushion	421X2.5X4			3	03
	5	**- -**	Adhesive Tape	#500 W=12		(VE36310)		
	6	**- -**	Holder, Rod L	LEFT		(V750840)		
	7	**- -**	Holder, Rod R	RIGHT		(V750850)	2	
	8	**VS368500**	Bushing				3	03
	9	**VN920900**	Bind Head Tapping Screw-1	3.5X8 MFZN2BL			19	01
*	10	**V7125500**	Rod					08
	11	**VT190400**	Gear				2	03
	12	**EG330060**	Bind Head Screw	3.0X10 MFZN2Y			2	01
	13	**- -**	Tape	300X25		(V749320)	2	

*: New Parts

RANK: Japan only

■ ARM ASSEMBLY

• Side view

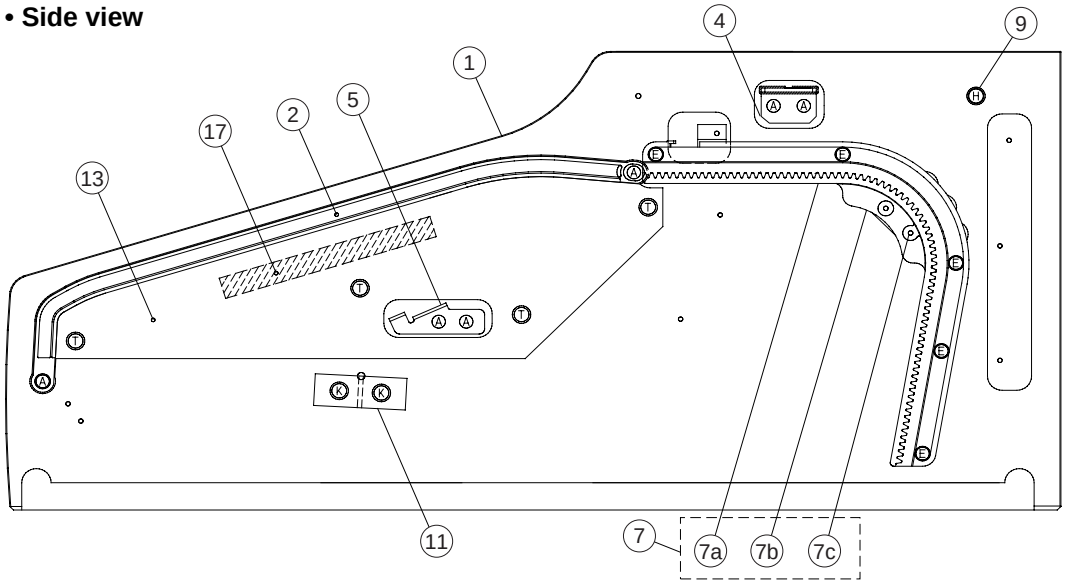

LOCATION	SYMBOL
16	T
12	K
10	H
8	E
6	A

• ARM ASSEMBLY L

	REF NO.	PART NO.	DESCRIPTION			REMARKS		QTY	RANK
*		**V7115800**	ARM ASSEMBLY L	LEFT		CVP-203			
	1	**- -**	Side Cover L	LEFT			(V711620)		
*	2	**V7493800**	Guide Rail Assembly L	LEFT					
	4	**- -**	Holder Assembly, Top Board			First Lot	(V257770)		
	4	**- -**	Holder Assembly, Top Board			Second Lot	(V753440)		
	5	**- -**	Panel Holder	A-3L			(V750640)		
	6	**EP030260**	Bind Head Tapping Screw-1	3.5X16 MFZN2BL				6	01
	7	**- -**	Rack Assembly L	LEFT			(V711750)		
*	7a	**V7117800**	Rack L	LEFT					
*	7b	**V7507900**	Bearing Assembly L	LEFT					
	7c	**EP600220**	Bind Head Tapping Screw-B	3.0X10 MFZN2Y				2	01
	8	**EP030470**	Bind Head Tapping Screw-1	3.5X20 MFZN2Y				5	01
	9	**CB033070**	Stopper						03
	10	**EM040080**	Flat Head Tapping Screw-1	4.0X20 MFZN2Y					
	11	**- -**	Crosspiece	30X27X18T			(V711910)		
	12	**VA076400**	Truss Head Tapping Screw-1	3.5X30 MFZN2Y				2	01
	13	**- -**	Cover Support L	LEFT			(V711810)		
	16	**EN630260**	Truss Head Tapping Screw-1	3.5X20 MFZN2Y				4	01
	17	**- -**	Adhesive Tape	#500 W=12			(VE36310)		

*: New Parts RANK: Japan only

• ARM ASSEMBLY R

	REF NO.	PART NO.	DESCRIPTION			REMARKS		QTY	RANK
*		**V7116000**	ARM ASSEMBLY R	RIGHT		CVP-203			
	1	**- -**	Side Cover R	RIGHT			(V711640)		
*	2	**V7493900**	Guide Rail Assembly R	RIGHT					
	4	**- -**	Holder Assembly, Top Board			First Lot	(V257770)		
	4	**- -**	Holder Assembly, Top Board			Second Lot	(V753440)		
	5	**- -**	Panel Holder	A-3R			(V750740)		
	6	**EP030260**	Bind Head Tapping Screw-1	3.5X16 MFZN2BL				6	01
	7	**- -**	Rack Assembly R	RIGHT			(V711760)		
*	7a	**V7117900**	Rack R	RIGHT					
*	7b	**V7508000**	Bearing Assembly	RIGHT					
	7c	**EP600220**	Bind Head Tapping Screw-B	3.0X10 MFZN2Y				2	01
	8	**EP030470**	Bind Head Tapping Screw-1	3.5X20 MFZN2Y				5	01
	9	**CB033070**	Stopper						03
	10	**EM040080**	Flat Head Tapping Screw-1	4.0X20 MFZN2Y					
	11	**- -**	Crosspiece	30X27X18T			(V711910)		
	12	**VA076400**	Truss Head Tapping Screw-1	3.5X30 MFZN2Y				2	01
	13	**- -**	Cover Support R	RIGHT			(V711830)		
	16	**EN630260**	Truss Head Tapping Screw-1	3.5X20 MFZN2Y				4	01
	17	**- -**	Adhesive Tape	#500 W=12			(VE36310)		

*: New Parts RANK: Japan only

■ FDD UNIT

• Adhesive tape installation view

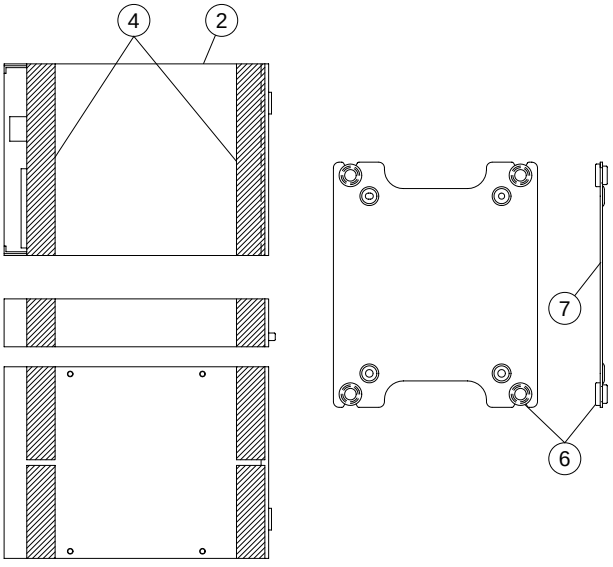

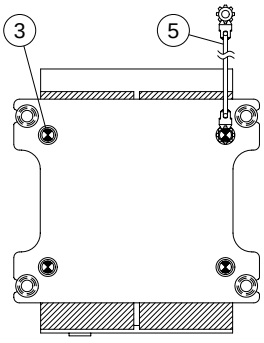

• Top view

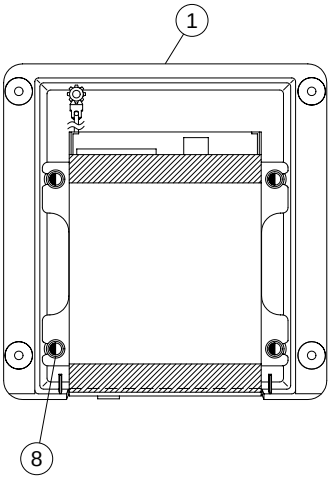

	REF NO.	PART NO.	DESCRIPTION			REMARKS	QTY	RANK
		- -	FDD UNIT			CVP-203 (V706210)		
*	1	**V7093800**	FDD Cover					
	2	**V6492300**	Floppy Disk Drive	DF354H 3.5"				13
	3	**EG330150**	Bind Head Screw	3.0X5 MFZN2Y			4	01
	4	- -	Adhesive Tape Black	15X30m		(V256440)		
	5	- -	GND Wire	L=120		(V686040)		
	6	**VA121600**	Bushing				4	01
	7	- -	Holder, FDD	1.2		(V523680)		
	8	**V2276900**	PW Head Tapping Screw-B	3.0X8-8 MFZN2BL			4	01

*: New Parts

RANK: Japan only

■ HEADPHONES JACK ASSEMBLY

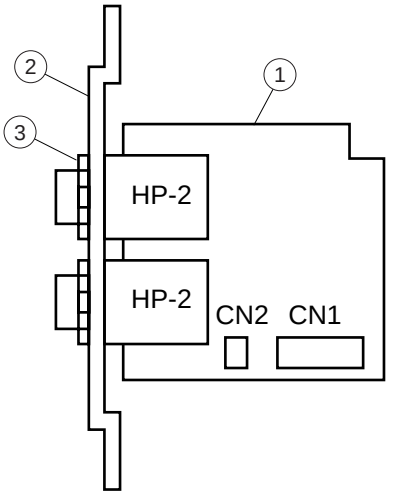

REF NO.	PART NO.	DESCRIPTION			REMARKS	QTY	RANK
		HEADPHONES JACK ASSEMBLY			CVP-203		
	- -	Headphones Jack Assembly			} (VT15870)		
	- -	Headphones Jack Assembly			} (V004750)		
1	**VT089300**	Circuit Board	HP		}		09
1	**V0047600**	Circuit Board	HP (YI)		}		
2	**VN631800**	Angle, Headphone					04
3	**VB508600**	Hexagonal Nut	12.0X14X2 MFZN2BL			2	01

∗: New Parts

RANK: Japan only

■ D-JACK ASSEMBLY

• Bottom view

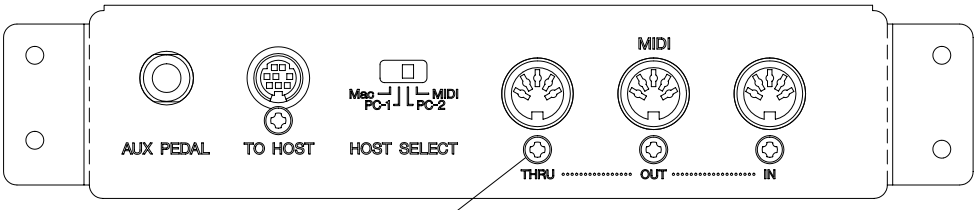

• Rear view

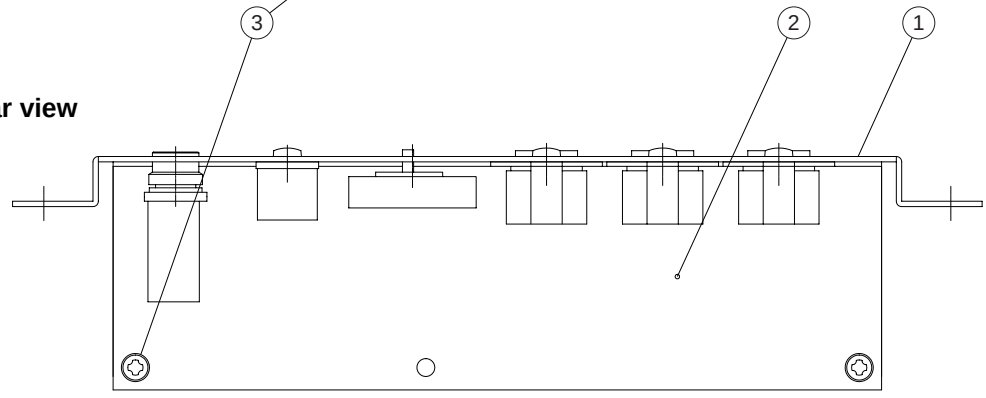

	REF NO.	PART NO.	DESCRIPTION			REMARKS	QTY	RANK
		- -	D-JACK ASSEMBLY			CVP-203 (V708200)		
*	1	**V7092400**	Angle, D-JACK					08
	2	**V6366200**	Circuit Board	D-JACK				10
	3	**EP600190**	Bind Head Tapping Screw-B	3.0X8 MFZN2BL			6	01

*: New Parts

RANK: Japan only

■ A-JACK ASSEMBLY

• **Bottom view**

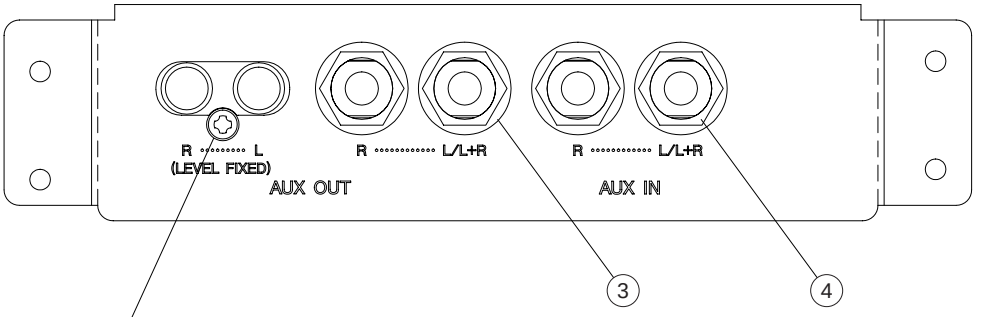

• **Rear view**

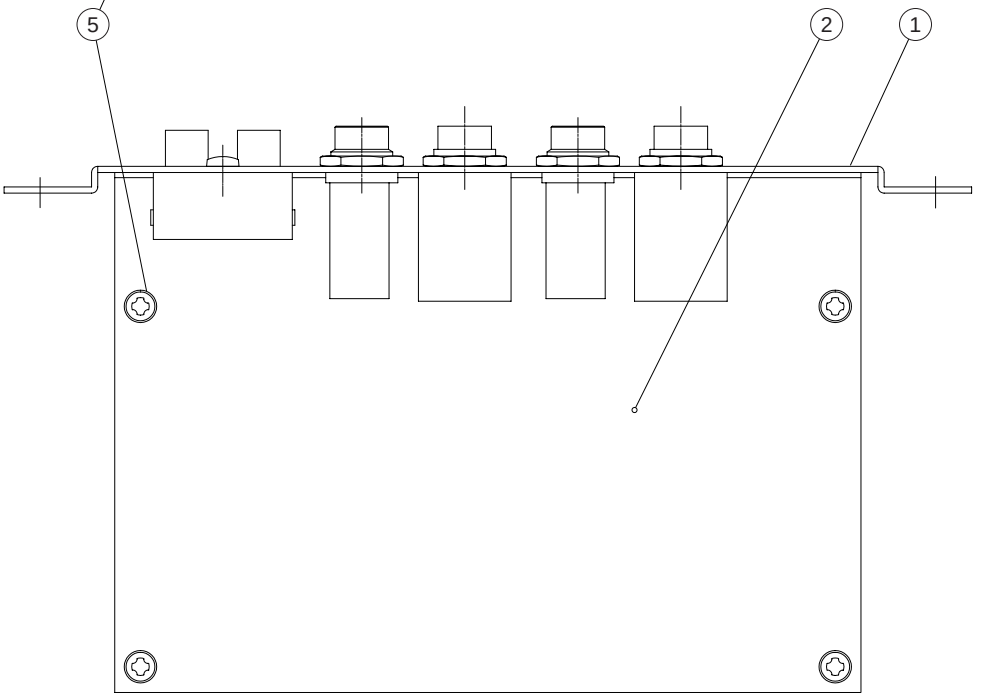

REF NO.	PART NO.	DESCRIPTION			REMARKS	QTY	RANK
	- -	A-JACK ASSEMBLY			CVP-203 (V753650)		
* 1	**V7536300**	Angle, A-JACK					08
* 2	**V7534800**	Circuit Board	A-JACK				
3	**VJ869400**	Washer Black				4	02
4	**VB508600**	Hexagonal Nut	12.0X14X2 MFZN2BL			4	01
5	**EP600190**	Bind Head Tapping Screw-B	3.0X8 MFZN2BL			5	01

*: New Parts

RANK: Japan only

■ SIDE BOARD ASSEMBLY

• Top view

• Side view

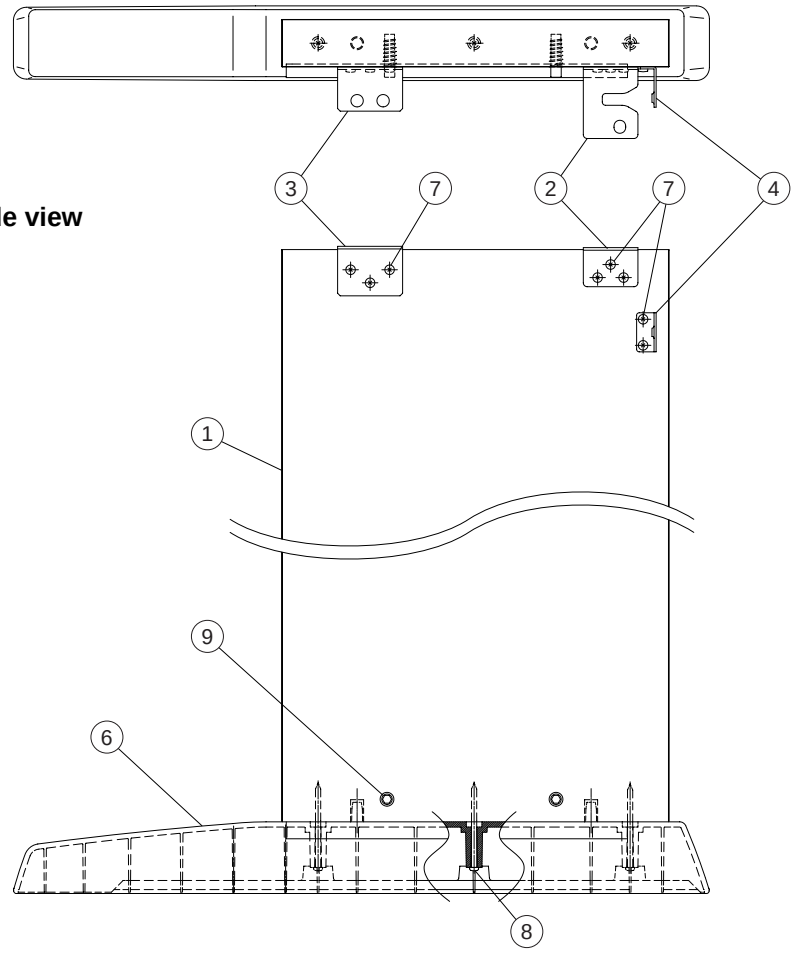

• SIDE BOARD ASSEMBLY L

	REF NO.	PART NO.	DESCRIPTION			REMARKS	QTY	RANK
*		**V7143000**	SIDE BOARD ASSEMBLY L	LEFT		CVP-203		
	1	**- -**	Side Board L	LEFT		(V744900)		
	2	**VS295500**	Holder, Stand L	LEFT				05
	3	**VZ885300**	Angle Bracket	2.0 L MFZN2				04
	4	**VQ958300**	Holder, Back Board					05
*	6	**V7145900**	Stand Base L	LEFT				08
	7	**EP030580**	Bind Head Tapping Screw-1	3.5X20 MFZN2BL			8	01
	8	**VV444000**	Pan Head Tapping Screw-1	4.0X65 MFZN2Y			3	01
	9	**V5251600**	Nut	TYPE M M6XL33			2	01

*: New Parts RANK: Japan only

• SIDE BOARD ASSEMBLY R

	REF NO.	PART NO.	DESCRIPTION			REMARKS	QTY	RANK
*		**V7143200**	SIDE BOARD ASSEMBLY R	RIGHT		CVP-203		
	1	**- -**	Side Board R	RIGHT		(V744910)		
	2	**VS295600**	Holder, Stand R	RIGHT				05
	3	**VZ885300**	Angle Bracket	2.0 L MFZN2				04
	4	**VQ958300**	Holder, Back Board					05
*	6	**V7146000**	Stand Base R	RIGHT				08
	7	**EP030580**	Bind Head Tapping Screw-1	3.5X20 MFZN2BL			8	01
	8	**VV444000**	Pan Head Tapping Screw-1	4.0X65 MFZN2Y			3	01
	9	**V5251600**	Nut	TYPE M M6XL33			2	01

*: New Parts RANK: Japan only

■ PEDAL BOX ASSEMBLY

• **Bottom view**

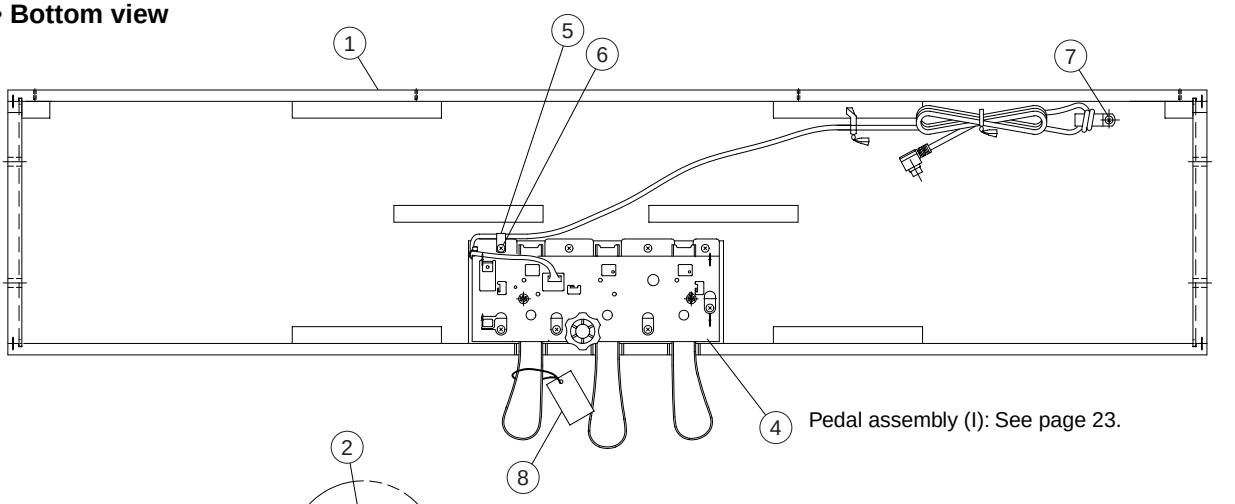

• **Front view**

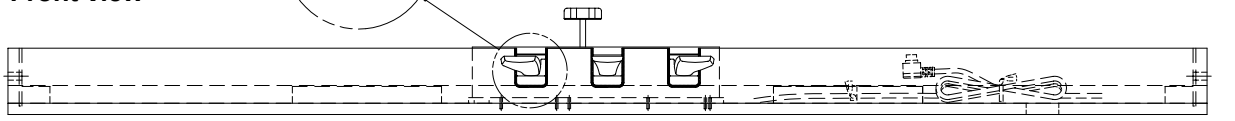

REF NO.	PART NO.	DESCRIPTION			REMARKS	QTY	RANK
	- -	PEDAL BOX ASSEMBLY			CVP-203 (V713720)		
* 1	**V7144500**	Pedal Box					
2	**VU464300**	Felt Red	115X12X2			3	03
4	**V0053700**	Pedal Assembly	(I)				18
5	**CB065520**	Nylon Clamp	NK-3N				01
6	**EP040230**	Bind Head Tapping Screw-1	4.0X14 MFZN2Y			8	01
7	**03747270**	Truss Head Tapping Screw-1	4.0X12 MFZN2BL				01
8	**VD966100**	Caution Label					03

*: New Parts

RANK: Japan only

■ PEDAL ASSEMBLY

• **Top view**

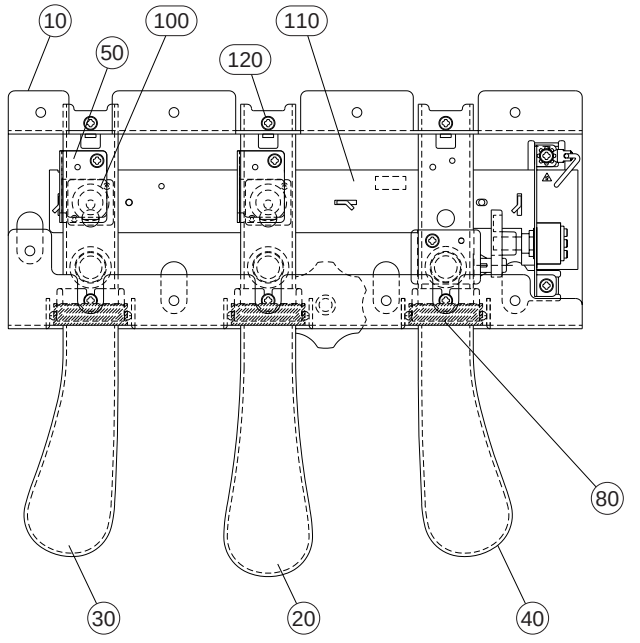

• **Side view**

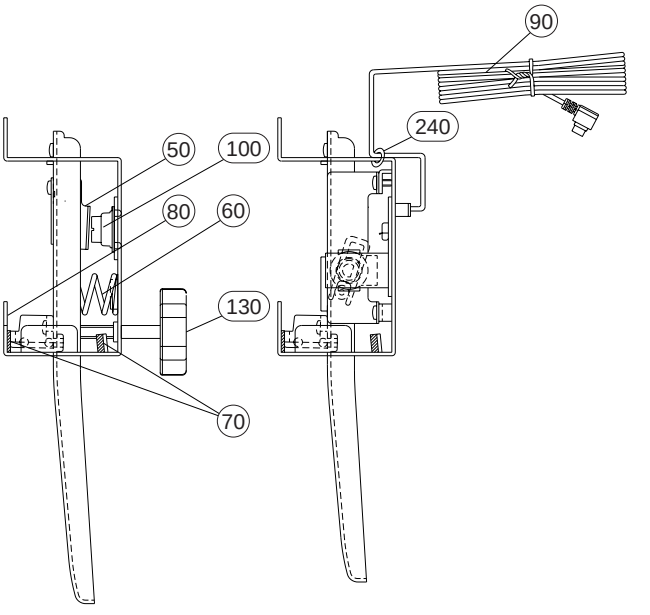

REF NO.	PART NO.	DESCRIPTION			REMARKS	QTY	RANK
	V0053700	PEDAL ASSEMBLY	(I)		CVP-203		18
10	**VU339700**	Pedal Frame					09
20	**VU362000**	Pedal Piece C	CENTER		Sostenuto pedal		08
30	**VU362100**	Pedal Piece L	LEFT		Left pedal		08
40	**VU362200**	Pedal Piece R	RIGHT		Damper pedal		08
50	**VV433500**	Actuator	PEDAL			3	03
60	**VP348100**	Pedal Spring				3	03
70	**VU346500**	Felt Black	PA			6	03
80	**VU339800**	Shutter	PEDAL			3	03
90	**V0044700**	Connector Assembly	PK-LF				08
100	**VU456000**	Rubber Contact	1 DOME PEDAL			3	03
110	**V2337300**	Circuit Board	PEDAL (SW)				07
120	**EP600190**	Bind Head Tapping Screw-B	3.0X8 MFZN2BL			10	01
130	**VU379700**	Adjuster					02
140	**--**	Grease	G-31KA		(VE96850)		38
240	**CB069250**	Cord Holder	BK-1			2	01

∗: New Parts

RANK: Japan only

■ MA60 ASSEMBLY

• **Top view**

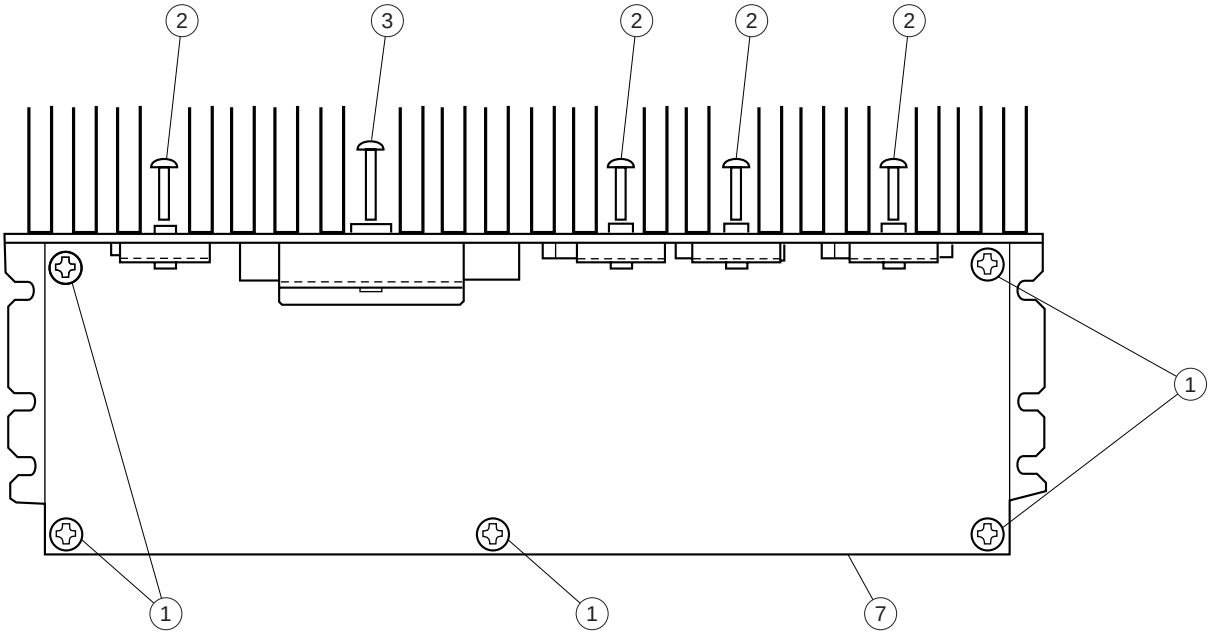

• **Front view**

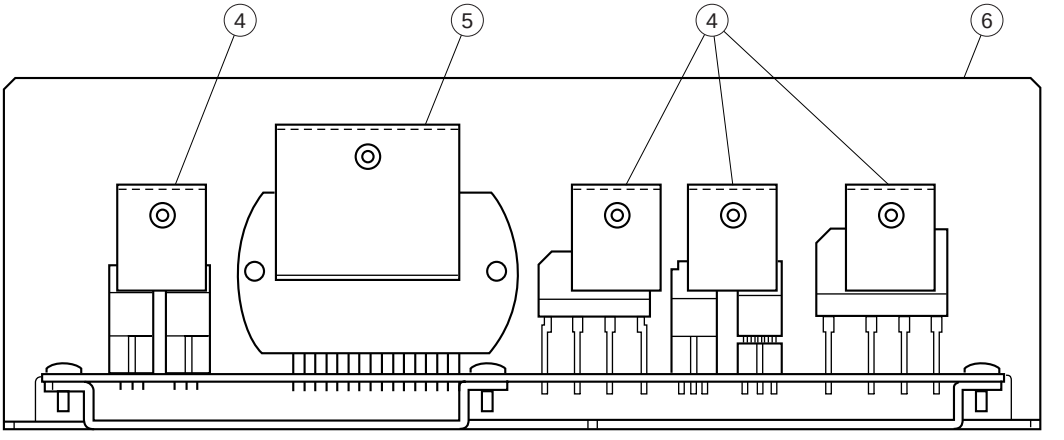

REF NO.	PART NO.	DESCRIPTION			REMARKS	QTY	RANK
		MA60 ASSEMBLY			CVP-203		
	VT144300	MA60 Assembly			J,U		
	VT144400	MA60 Assembly			E,B,N		
1	**EP640410**	Bind Head Tapping Screw-B	4.0X8 MFZN2Y			5	01
2	**EP600220**	Bind Head Tapping Screw-B	3.0X10 MFZN2Y			4	01
3	**EP600390**	Bind Head Tapping Screw-B	3.0X16 MFZN2Y				01
4	**VT461100**	Transistor Holder	A			4	03
5	**VT461200**	Transistor Holder	B				03
6	**VT444300**	Heat Sink					11
7	**VT143900**	Circuit Board	MA60		J,U		18
7	**VT144000**	Circuit Board	MA60		E,B,N		

∗: New Parts

RANK: Japan only

■ FU60 ASSEMBLY

• Front view

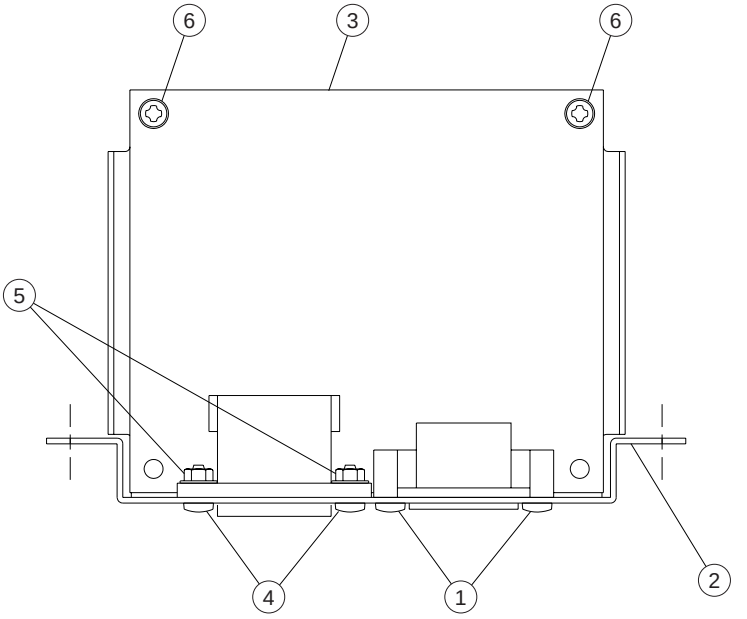

• Top view

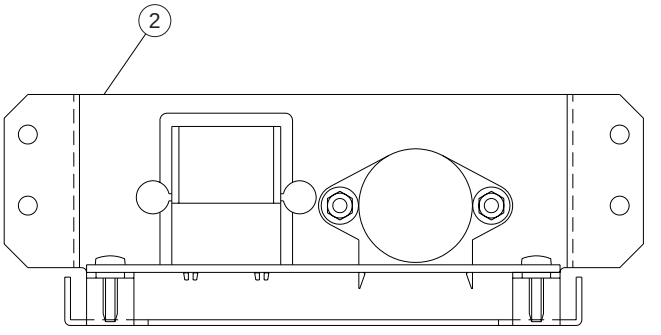

REF NO.	PART NO.	DESCRIPTION			REMARKS	QTY	RANK
		FU60 ASSEMBLY			CVP-203		10
	VT152000	FU60 Assembly			J		10
	VT152100	FU60 Assembly			U		10
	VT152200	FU60 Assembly			E,B		10
	VT153300	FU60 Assembly			N		12
1	**EP600190**	Bind Head Tapping Screw-B	3.0X8 MFZN2BL			2	01
2	**VT172900**	Plate, AC Inlet			J,U,E,B		07
2	**VT488700**	Panel, AC Inlet			N		08
3	**- -**	Circuit Board	FU60		J (VT15140)		
3	**- -**	Circuit Board	FU60		U (VT15150)		
3	**- -**	Circuit Board	FU60		E,B (VT15160)		
3	**- -**	Circuit Board	FU60		N (VT15290)		
4	**EG330380**	Bind Head Screw	3.0X10 MFZN2BL		N	2	01
5	**VA211900**	Hexagonal Nut	3.0 MFZN2Y		N	2	01
6	**VE683000**	Bind Head Tapping Screw-B	3.0X12 MFZN2Y			2	1

∗: New Parts

RANK: Japan only

■ KEYBOARD ASSEMBLY

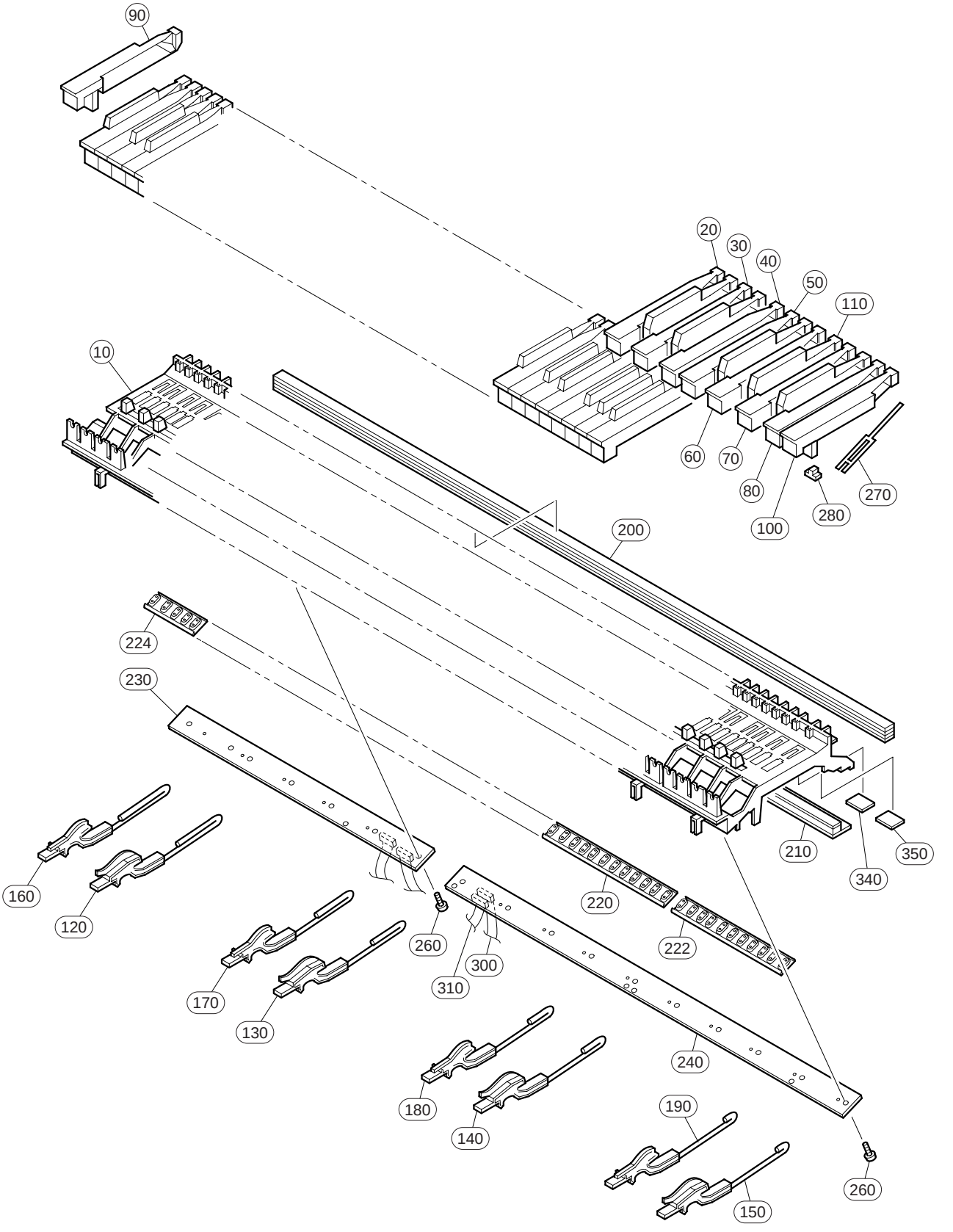

	REF NO.	PART NO.	DESCRIPTION			REMARKS	QTY	RANK
*		**V7803300**	KEYBOARD ASSEMBLY	GHD_CL88		CVP-203		
	10	**- -**	MK Frame			(VU42210)		
	20	**VU101000**	White Key	C			7	05
	30	**VU101100**	White Key	D			7	05
	40	**VU101200**	White Key	E			7	05
	50	**VU101300**	White Key	F			7	05
	60	**VU101400**	White Key	G			7	05
	70	**VU101500**	White Key	A			7	05
	80	**VU101600**	White Key	B			8	05
	90	**VU101700**	White Key	A'				05
	100	**VU101800**	White Key	C'				05
	110	**VU102100**	Black Key				36	05
	120	**VY828500**	Hammer, White Key	W1			13	05
	130	**VY828600**	Hammer, White Key	W2			13	05
	140	**VY828700**	Hammer, White Key	W3			13	05
	150	**VY828800**	Hammer, White Key	W4			13	05
	160	**VY828900**	Hammer, Black Key	B1			9	05
	170	**VY829000**	Hammer, Black Key	B2			9	05
	180	**VY829100**	Hammer, Black Key	B3			9	05
	190	**VY829200**	Hammer, Black Key	B4			9	05
	200	**VU342100**	Stopper Felt	U88				09
	210	**V7640100**	Stopper Felt	L88_W				07
	220	**VY846700**	Rubber Contact	OCTAVE 12KEY D-C#			6	08
	222	**VY846800**	Rubber Contact	OCTAVE 11KEY A-C#				08
	224	**VY846900**	Rubber Contact	OCTAVE 5KEY D-C				08
	230	**V7817100**	Circuit Board	GH-DclSW L				
	240	**VZ705300**	Circuit Board	GH-D_SW H				13
	260	**VT413400**	Bind Head Tapping Screw-P	3.0X10 MFZN2			17	01
	270	**VZ417900**	Spring	R WHITE/BLACK		}	88	03
	270	**V2798500**	Spring	R WHITE/BLACK		}	88	
	280	**VU237500**	Rubber			}	88	03
	280	**V2211300**	Rubber	2		}	88	03
	290	**- -**	Grease	G-1006Y		(V627430)		
	300	**VU341800**	Connector Assembly	KRD 9P BLOCK				06
	310	**VU341900**	Connector Assembly	KRD 12P NOTE				07
	340	**VV467900**	Stopper Support A	A 35.5X20			11	03
	350	**VV468100**	Stopper Support B	B 24X20			18	03
			JIGS					
		TX000670	Rod					

*: New Parts

RANK: Japan only

■ BENCH (BC-201DR)

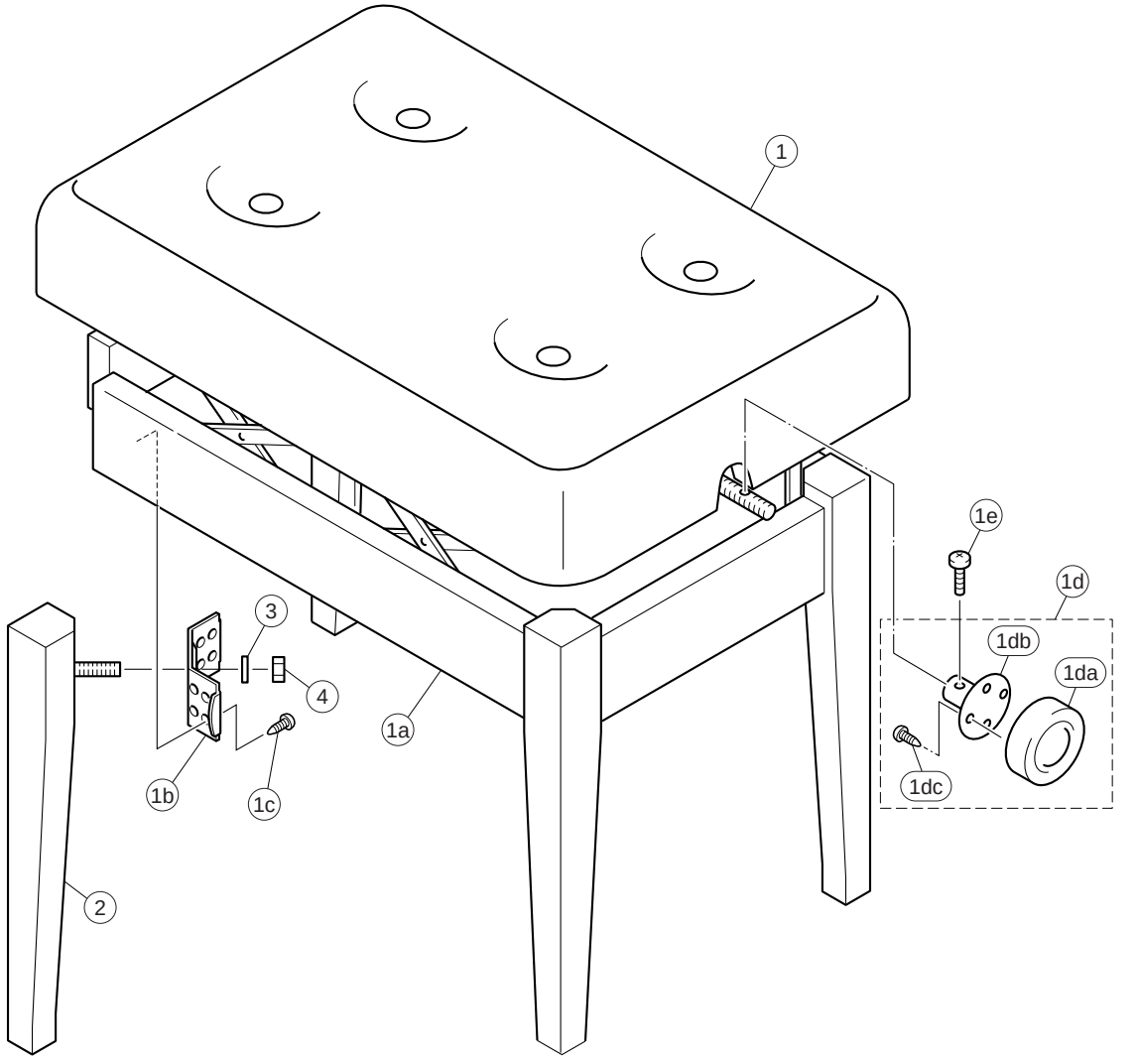

	REF NO.	PART NO.	DESCRIPTION			REMARKS	QTY	RANK
		- -	BENCH	BC-201DR		CVP-203 J (V802960)		
*	1	**V8029900**	Bench Board Assembly					
	1a	- -	Lift Assembly			(V766250)		
*	1b	**V7396200**	Holder, Leg				4	03
	1c	**EP030260**	Bind Head Tapping Screw-1	3.5X16 MFZN2BL			32	01
*	1d	**V8080900**	Knob Assembly					
	1da	- -	Knob			(V767170)		
*	1db	**V7662700**	Angle					
	1dc	**EP040250**	Bind Head Tapping Screw-1	4.0X16 MFZN2BL			4	01
	1e	**VR060200**	Bind Head Tapping Screw-B	4.0X16 MFZN2BL				01
*	2	**V7672000**	Leg Assembly				4	
*	3	**V7678600**	Spring Washer	#2 10.0 MFZN2BL			4	
*	4	**V7678700**	Hexagonal Nut	#1 10.0X1.25 MFZN2			4	
			ACCESSORY					
		- -	Wrench			(V688680)		

*: New Parts

RANK: Japan only

■ BENCH (BC-100DR)

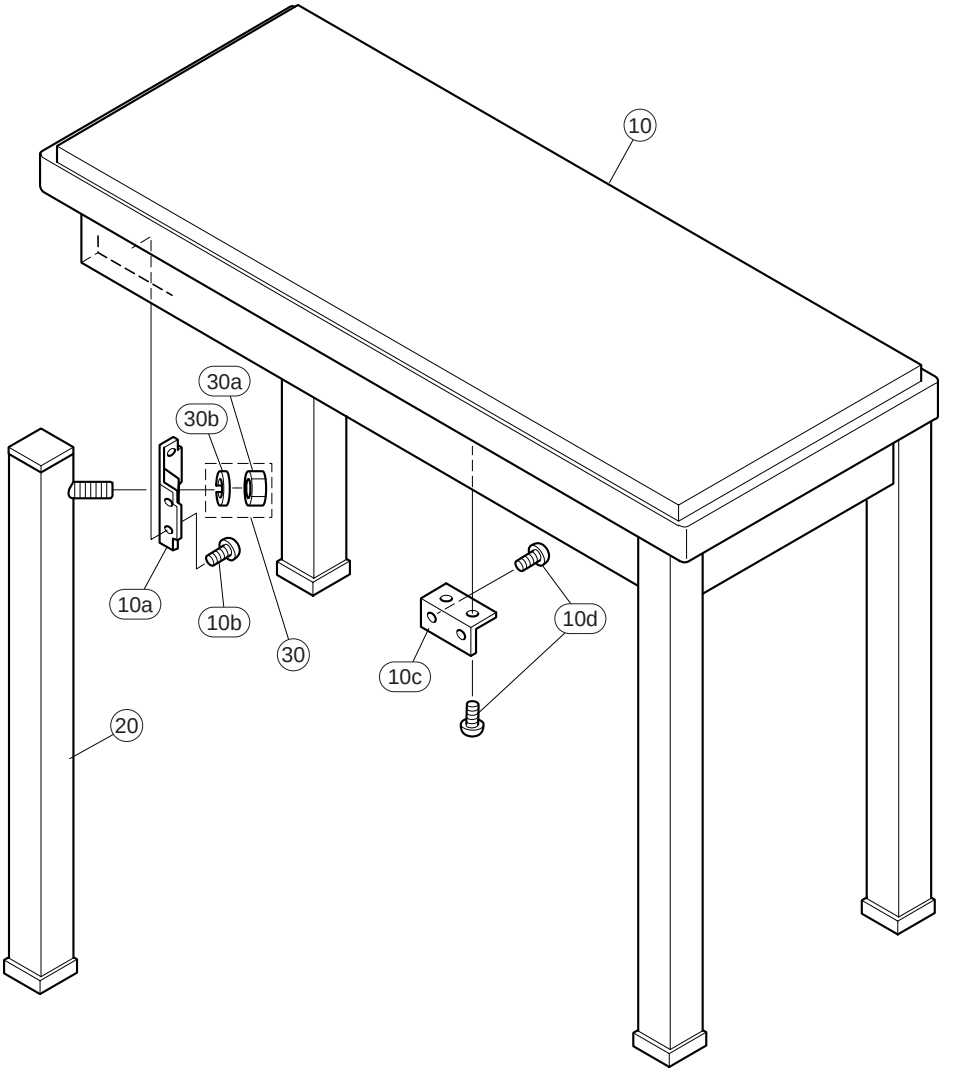

	REF NO.	PART NO.	DESCRIPTION			REMARKS	QTY	RANK
		- -	BENCH	BC-100DR		CVP-203 U,N (V553140)		
	10	**V5532900**	Bench Board Assembly					16
	10a	**AA016480**	Holder, Leg				4	02
	10b	**EP030190**	Bind Head Tapping Screw-1	3.5X16 MFZN2Y			16	01
	10c	**VC969300**	Holder, Bench Board				4	03
	10d	**EP030170**	Bind Head Tapping Screw-1	3.5X14 MFZN2Y			16	01
*	20	**V8176300**	Leg Assembly				4	
	30	**VS530500**	Screw Set					03
	30a	**03761250**	Hexagonal Nut	#1 10.0X1.25 MFZN2			4	01
	30b	**03765820**	Spring Washer	#2 10.0 MFZN2Y			4	01
			ACCESSORY					
		- -	Wrench			(V688680)		

*: New Parts

RANK: Japan only

■ ELECRICAL PARTS

	REF NO.	PART NO.	DESCRIPTION			REMARKS	QTY	RANK
			ELECTRICAL PARTS			CVP-203		
*		**V7534800**	Circuit Board	A-JACK		(XZ888B0)		
		V6366200	Circuit Board	D-JACK		(XW982D0)		10
		V6366400	Circuit Board	PEDAL (D-JACK)		(XW982D0)		
*		**V7166300**	Circuit Board	DM		(XZ905D0)		
		- -	Circuit Board	FU60		J (VT15140,XQ395A0)		
		- -	Circuit Board	FU60		U (VT15150,XQ395A0)		
		- -	Circuit Board	FU60		E,B (VT15160,XQ395A0)		
		- -	Circuit Board	FU60		N (VT15290,XQ395A0)		
		VZ705300	Circuit Board	GH-D_SW H		(XT241A0)		13
		V7817100	Circuit Board	GH-DclSW L		(XT240A0)		
*		**V7135900**	Circuit Board	GLC		(XZ883B0)		
*		**V7135800**	Circuit Board	GLL		(XZ883B0)		
*		**V7136100**	Circuit Board	GLR		(XZ883B0)		
		VT089300	Circuit Board	HP		(XQ390A0)		09
		V0047600	Circuit Board	HP (YI)		(XQ389A0,XQ390A0)		
*		**V7170200**	Circuit Board	INV		(XZ881C0)		
*		**V7134700**	Circuit Board	MV		(XZ881C0)		
*		**V7135100**	Circuit Board	PNCB		(XZ881C0)		
*		**V7134600**	Circuit Board	PNL		(XZ881C0)		
		VT143900	Circuit Board	MA60		J,U (XQ393E0,XQ778E0)		18
		VT144000	Circuit Board	MA60		E,B,N (XQ393E0,XQ778E0)		
		V2403300	Circuit Board	NET1		(XT123B0)		
		V2337300	Circuit Board	PEDAL (SW)		(XR780B0)		07
*		**V7134800**	Circuit Board	PNCL		(X0080C0)		
*		**V7134900**	Circuit Board	PNCR		(X0080C0)		
*		**V7135200**	Circuit Board	PNR		(XZ882C0)		
*		**V7161600**	Circuit Board	SWX		(XZ896D0)		
*		**V7534800**	Circuit Board	A-JACK		(XZ888B0)		
		- -	Jumper Wire	0.55		(VA07890)		
	C0100	**UR866470**	Electrolytic Cap.	4.70 50.0V				01
	C0101	**US063330**	Ceramic Capacitor-B (chip)	3300P 50V K				01
	C0102	**US062470**	Ceramic Capacitor-SL(chip)	470P 50V J				01
	C0103	**UR866470**	Electrolytic Cap.	4.70 50.0V				01
	C0120	**UR866470**	Electrolytic Cap.	4.70 50.0V				01
	C0121	**US063330**	Ceramic Capacitor-B (chip)	3300P 50V K				01
	C0122	**US062470**	Ceramic Capacitor-SL(chip)	470P 50V J				01
	C0123	**UR866470**	Electrolytic Cap.	4.70 50.0V				01
	C0200	**US062150**	Ceramic Capacitor-SL(chip)	150P 50V J				01
	C0201	**UR866470**	Electrolytic Cap.	4.70 50.0V				01
	C0202	**US062100**	Ceramic Capacitor-SL(chip)	100P 50V J				01
	C0203	**US145100**	Ceramic Capacitor-F (chip)	0.1000 25V Z				01
	C0204	**UR848220**	Electrolytic Cap.	220.00 25.0V				01
	C0205	**UR866470**	Electrolytic Cap.	4.70 50.0V				01
	C0206	**US063100**	Ceramic Capacitor-B (chip)	1000P 50V K				01
	C0250	**US062150**	Ceramic Capacitor-SL(chip)	150P 50V J				01
	C0251	**UR866470**	Electrolytic Cap.	4.70 50.0V				01
	C0252	**US062100**	Ceramic Capacitor-SL(chip)	100P 50V J				01
	C0253	**US145100**	Ceramic Capacitor-F (chip)	0.1000 25V Z				01
	C0254	**UR848220**	Electrolytic Cap.	220.00 25.0V				01
	C0255	**UR866470**	Electrolytic Cap.	4.70 50.0V				01
	C0256	**US063100**	Ceramic Capacitor-B (chip)	1000P 50V K				01
	C0301	**VU838100**	Monolithic Mylar Capacitor	1.0000 50V J				
	C0302	**VR169100**	Monolithic Mylar Capacitor	ECQ-V1H394JL3 0.39				01
	C0303	**VU838100**	Monolithic Mylar Capacitor	1.0000 50V J				
	C0304	**UA354820**	Mylar Capacitor	0.0820 50V J				01
	C0305	**VR168400**	Monolithic Mylar Capacitor	ECQ-V1H124JL3 0.12				01
	C0306	**VR168600**	Monolithic Mylar Capacitor	ECQ-V1H184JL3 0.18				01
	C0307	**VR168400**	Monolithic Mylar Capacitor	ECQ-V1H124JL3 0.12				01
	C0308	**UA354470**	Mylar Capacitor	0.0470 50V J				
	C0309	**UA354220**	Mylar Capacitor	0.0220 50V J				
	C0310	**UA354220**	Mylar Capacitor	0.0220 50V J				
	C0311	**UA354100**	Mylar Capacitor	0.0100 50V J				01
	C0312	**UA353820**	Mylar Capacitor	8200P 50V J				
	C0313	**UA353680**	Mylar Capacitor	6800P 50V J				01
	C0314	**UA352100**	Mylar Capacitor	100P 50V J				01
	C0320	**US062470**	Ceramic Capacitor-SL(chip)	470P 50V J				01
	C0401	**VU838100**	Monolithic Mylar Capacitor	1.0000 50V J				
	C0402	**VR169100**	Monolithic Mylar Capacitor	ECQ-V1H394JL3 0.39				01

*: New Parts

RANK: Japan only

REF NO.	PART NO.	DESCRIPTION			REMARKS	QTY	RANK
C0403	**VU838100**	Monolithic Mylar Capacitor	1.0000 50V J				
C0404	**UA354820**	Mylar Capacitor	0.0820 50V J				01
C0405	**VR168400**	Monolithic Mylar Capacitor	ECQ-V1H124JL3 0.12				01
C0406	**VR168600**	Monolithic Mylar Capacitor	ECQ-V1H184JL3 0.18				01
C0407	**VR168400**	Monolithic Mylar Capacitor	ECQ-V1H124JL3 0.12				01
C0408	**UA354470**	Mylar Capacitor	0.0470 50V J				
C0409	**UA354220**	Mylar Capacitor	0.0220 50V J				
C0410	**UA354220**	Mylar Capacitor	0.0220 50V J				
C0411	**UA354100**	Mylar Capacitor	0.0100 50V J				01
C0412	**UA353820**	Mylar Capacitor	8200P 50V J				
C0413	**UA353680**	Mylar Capacitor	6800P 50V J				01
C0414	**UA352100**	Mylar Capacitor	100P 50V J				01
C0420	**US062470**	Ceramic Capacitor-SL(chip)	470P 50V J				01
C0520	**UR848220**	Electrolytic Cap.	220.00 25.0V				01
C0521	**UR848220**	Electrolytic Cap.	220.00 25.0V				01
C0531	**US064100**	Ceramic Capacitor-B (chip)	0.0100 50V K				01
C0600	**UR866470**	Electrolytic Cap.	4.70 50.0V				01
C0601	**US063100**	Ceramic Capacitor-B (chip)	1000P 50V K				01
C0602	**US063680**	Ceramic Capacitor-B (chip)	6800P 50V K				01
C0610	**UR866470**	Electrolytic Cap.	4.70 50.0V				01
C0612	**US063680**	Ceramic Capacitor-B (chip)	6800P 50V K				01
C0620	**US063100**	Ceramic Capacitor-B (chip)	1000P 50V K				01
C0640	**US063100**	Ceramic Capacitor-B (chip)	1000P 50V K				01
CN500	**VB390800**	Connector Base Post	PH 12P TE				01
CN510	**VB390400**	Connector Base Post	PH 8P TE				01
CN520	**VB390500**	Connector Base Post	PH 9P TE				03
CN530	**VB390300**	Connector Base Post	PH 7P TE				01
D0200	**VB493900**	Diode	MA221				01
D0640	**VB493900**	Diode	MA221				01
IC100	**XF291A00**	IC	UPC4570G2		OP AMP		03
IC200	**XT131A00**	IC	LA6517M-TE-R		OP AMP		04
IC300	**XY487A00**	IC	M5229FP		EQUALIZER		03
IC400	**XY487A00**	IC	M5229FP		EQUALIZER		03
JK600	**VL080500**	Phone Jack	YKB21-5076		AUX IN L/L+R		02
JK610	**VS115400**	Phone Jack Black	LGR4609-7000		AUX IN R		01
JK620	**VL080500**	Phone Jack	YKB21-5076		AUX OUT L/L+R		02
JK630	**VS115400**	Phone Jack Black	LGR4609-7000		AUX OUT R		01
JK640	**VP599300**	Pin Jack	2P YKC21-3120		AUX OUT LEVEL FIXED L/R		02
L0600	**GE300670**	Ferrite Bead	BL02RN2-R62T4				02
L0620	**GE300670**	Ferrite Bead	BL02RN2-R62T4				02
L0640	**GE300670**	Ferrite Bead	BL02RN2-R62T4				02
R0100	**RD357100**	Carbon Resistor (chip)	10K 63M J				01
R0101	**RD357100**	Carbon Resistor (chip)	10K 63M J				01
R0102	**RD356330**	Carbon Resistor (chip)	3.3K 63M J				01
R0103	**RD355100**	Carbon Resistor (chip)	100 63M J				01
R0120	**RD357100**	Carbon Resistor (chip)	10K 63M J				01
R0121	**RD357100**	Carbon Resistor (chip)	10K 63M J				01
R0122	**RD356330**	Carbon Resistor (chip)	3.3K 63M J				01
R0123	**RD355100**	Carbon Resistor (chip)	100 63M J				01
R0200	**RD357100**	Carbon Resistor (chip)	10K 63M J				01
R0203	**RD354330**	Carbon Resistor (chip)	33 63M J				01
R0204	**RD357100**	Carbon Resistor (chip)	10K 63M J				01
R0250	**RD357100**	Carbon Resistor (chip)	10K 63M J				01
R0253	**RD354330**	Carbon Resistor (chip)	33 63M J				01
R0254	**RD357100**	Carbon Resistor (chip)	10K 63M J				01
R0301	**RD357180**	Carbon Resistor (chip)	18K 63M J				01
R0302	**RD356390**	Carbon Resistor (chip)	3.9K 63M J				01
R0303	**RD357180**	Carbon Resistor (chip)	18K 63M J				01
R0304	**RD356330**	Carbon Resistor (chip)	3.3K 63M J				01
R0305	**RD356120**	Carbon Resistor (chip)	1.2K 63M J				01
R0306	**RD357180**	Carbon Resistor (chip)	18K 63M J				01
R0307	**RD356180**	Carbon Resistor (chip)	1.8K 63M J				01
R0308	**RD357180**	Carbon Resistor (chip)	18K 63M J				01
R0309	**RD356220**	Carbon Resistor (chip)	2.2K 63M J				01
R0310	**RD357180**	Carbon Resistor (chip)	18K 63M J				01
R0311	**RD357150**	Carbon Resistor (chip)	15K 63M J				01
R0312	**RD356820**	Carbon Resistor (chip)	8.2K 63M J				01
R0313	**RD357220**	Carbon Resistor (chip)	22K 63M J				01
R0314	**RD356180**	Carbon Resistor (chip)	1.8K 63M J				01
R0320	**RD356330**	Carbon Resistor (chip)	3.3K 63M J				01

∗: New Parts

RANK: Japan only

	REF NO.	PART NO.	DESCRIPTION			REMARKS	QTY	RANK
	R0321	**RD356470**	Carbon Resistor (chip)	4.7K 63M J				01
	R0323	**RD356270**	Carbon Resistor (chip)	2.7K 63M J				01
	R0401	**RD357180**	Carbon Resistor (chip)	18K 63M J				01
	R0402	**RD356390**	Carbon Resistor (chip)	3.9K 63M J				01
	R0403	**RD357180**	Carbon Resistor (chip)	18K 63M J				01
	R0404	**RD356330**	Carbon Resistor (chip)	3.3K 63M J				01
	R0405	**RD356120**	Carbon Resistor (chip)	1.2K 63M J				01
	R0406	**RD357180**	Carbon Resistor (chip)	18K 63M J				01
	R0407	**RD356180**	Carbon Resistor (chip)	1.8K 63M J				01
	R0408	**RD357180**	Carbon Resistor (chip)	18K 63M J				01
	R0409	**RD356220**	Carbon Resistor (chip)	2.2K 63M J				01
	R0410	**RD357180**	Carbon Resistor (chip)	18K 63M J				01
	R0411	**RD357150**	Carbon Resistor (chip)	15K 63M J				01
	R0412	**RD356820**	Carbon Resistor (chip)	8.2K 63M J				01
	R0413	**RD357220**	Carbon Resistor (chip)	22K 63M J				01
	R0414	**RD356180**	Carbon Resistor (chip)	1.8K 63M J				01
	R0420	**RD356330**	Carbon Resistor (chip)	3.3K 63M J				01
	R0421	**RD356470**	Carbon Resistor (chip)	4.7K 63M J				01
	R0423	**RD356270**	Carbon Resistor (chip)	2.7K 63M J				01
	R0520	**RD350000**	Carbon Resistor (chip)	0 63M J				01
	R0530	**RD350000**	Carbon Resistor (chip)	0 63M J				01
	-0533	**RD350000**	Carbon Resistor (chip)	0 63M J				01
	R0600	**RD356560**	Carbon Resistor (chip)	5.6K 63M J				01
	R0601	**RD356560**	Carbon Resistor (chip)	5.6K 63M J				01
	R0610	**RD356560**	Carbon Resistor (chip)	5.6K 63M J				01
	R0611	**RD356560**	Carbon Resistor (chip)	5.6K 63M J				01
	R0620	**RD355680**	Carbon Resistor (chip)	680 63M J				01
	R0630	**RD355680**	Carbon Resistor (chip)	680 63M J				01
	R0640	**RD355680**	Carbon Resistor (chip)	680 63M J				01
	R0641	**RD356470**	Carbon Resistor (chip)	4.7K 63M J				01
	R0650	**RD355680**	Carbon Resistor (chip)	680 63M J				01
	R0651	**RD356470**	Carbon Resistor (chip)	4.7K 63M J				01
	R0700	**RD356330**	Carbon Resistor (chip)	3.3K 63M J				01
	R0701	**RD357330**	Carbon Resistor (chip)	33K 63M J				01
*	RY200	**V7358200**	Relay	DC FBR12WD12 12V				04
*	RY640	**V7358200**	Relay	DC FBR12WD12 12V				04
	TR700	**VV556400**	Transistor	2SC2412K Q,R,S				01
		V6366200	Circuit Board	D-JACK		(XW982D0)		10
		V6366400	Circuit Board	PEDAL (D-JACK)		(XW982D0)		
	C0002	**US064100**	Ceramic Capacitor-B (chip)	0.0100 50V K				01
	C0005	**UR837100**	Electrolytic Cap.	10.00 16.0V				01
	C0006	**UN817470**	Electrolytic Cap.-BP	47.00 6.3V				01
	C0008	**US064100**	Ceramic Capacitor-B (chip)	0.0100 50V K				01
	C0009	**US135100**	Ceramic Capacitor-F (chip)	0.1000 16V Z				01
	C0010	**US064100**	Ceramic Capacitor-B (chip)	0.0100 50V K				01
	C0011	**US064100**	Ceramic Capacitor-B (chip)	0.0100 50V K				01
	C0012	**UR837100**	Electrolytic Cap.	10.00 16.0V				01
	C0013	**US064100**	Ceramic Capacitor-B (chip)	0.0100 50V K				01
	C0020	**US064100**	Ceramic Capacitor-B (chip)	0.0100 50V K				01
	CN001	**VB390600**	Connector Base Post	PH 10P TE				01
	CN002	**VB390100**	Connector Base Post	PH 5P TE				01
	D0001	**VV925900**	Diode	RLS-73 TE-11				01
	-0004	**VV925900**	Diode	RLS-73 TE-11				01
	IC001	**XI348A00**	IC	SC7SU04FEL INV		INVERTER		01
	IC002	**XU073A00**	IC	SN75C1168NSR LINE		LINE TRANSCEIVER		05
	IC003	**VD473200**	Photo Coupler	6N137				05
	JK001	**VT202500**	DIN Connector	5P YKF51-50		MIDI IN		01
	JK002	**VT202500**	DIN Connector	5P YKF51-50		MIDI OUT		01
	JK003	**VT202500**	DIN Connector	5P YKF51-50		MIDI THRU		01
	JK004	**VV269500**	DIN Connector	8P MD-S813		TO HOST		03
	JK005	**V4874800**	DIN Connector	6P MD-S613		to Pedal assembly		02
	JK006	**VS115400**	Phone Jack Black	LGR4609-7000		AUX PEDAL		01
	L0001	**VQ724900**	Chip Inductance	BK2125HM601-T				01
	-0003	**VQ724900**	Chip Inductance	BK2125HM601-T				01
	L0004	**RD250000**	Carbon Resistor (chip)	0.0 0.0 J				01
	L0005	**VQ724900**	Chip Inductance	BK2125HM601-T				01
	-0019	**VQ724900**	Chip Inductance	BK2125HM601-T				01
	R0002	**RD357100**	Carbon Resistor (chip)	10K 63M J				01
	-0005	**RD357100**	Carbon Resistor (chip)	10K 63M J				01

*: New Parts

RANK: Japan only

	REF NO.	PART NO.	DESCRIPTION			REMARKS	QTY	RANK
	R0006	**RD350000**	Carbon Resistor (chip)	0 63M J				01
	R0007	**RD355100**	Carbon Resistor (chip)	100 63M J				01
	R0008	**RD355100**	Carbon Resistor (chip)	100 63M J				01
	R0009	**RD356100**	Carbon Resistor (chip)	1.0K 63M J				01
	R0010	**RD357100**	Carbon Resistor (chip)	10K 63M J				01
	R0011	**RD357100**	Carbon Resistor (chip)	10K 63M J				01
	R0012	**RD356100**	Carbon Resistor (chip)	1.0K 63M J				01
	R0013	**RD357100**	Carbon Resistor (chip)	10K 63M J				01
	R0014	**RD355220**	Carbon Resistor (chip)	220 63M J				01
	R0015	**RD355220**	Carbon Resistor (chip)	220 63M J				01
	R0016	**RD357100**	Carbon Resistor (chip)	10K 63M J				01
	R0017	**RD357220**	Carbon Resistor (chip)	22K 63M J				01
	R0018	**RD357220**	Carbon Resistor (chip)	22K 63M J				01
	R0019	**RD357100**	Carbon Resistor (chip)	10K 63M J				01
	R0020	**RD356150**	Carbon Resistor (chip)	1.5K 63M J				01
	R0021	**RD357100**	Carbon Resistor (chip)	10K 63M J				01
	R0022	**RD357220**	Carbon Resistor (chip)	22K 63M J				01
	R0023	**RD356150**	Carbon Resistor (chip)	1.5K 63M J				01
	R0024	**RD355220**	Carbon Resistor (chip)	220 63M J				01
	-0028	**RD355220**	Carbon Resistor (chip)	220 63M J				01
	R0029	**RD357100**	Carbon Resistor (chip)	10K 63M J				01
	R0030	**RD356100**	Carbon Resistor (chip)	1.0K 63M J				01
	R0031	**RD355220**	Carbon Resistor (chip)	220 63M J				01
	R0032	**RD357100**	Carbon Resistor (chip)	10K 63M J				01
	SW001	**VQ665200**	Slide Switch	SSSF144-S06N-0		HOST SELECT		03
	TR001	**VV556400**	Transistor	2SC2412K Q,R,S				01
	-004	**VV556400**	Transistor	2SC2412K Q,R,S				01
*		**V7166300**	Circuit Board	DM		(XZ905D0)		
	C0001	**UF038100**	Electrolytic Cap. (chip)	100 16V				01
	C0002	**US064100**	Ceramic Capacitor-B (chip)	0.0100 50V K				01
	C0003	**UF118330**	Electrolytic Cap. (chip)	330 6.3V UUR0J3				01
	C0004	**US062100**	Ceramic Capacitor-SL(chip)	100P 50V J				01
	C0005	**US062100**	Ceramic Capacitor-SL(chip)	100P 50V J				01
	C0006	**US064100**	Ceramic Capacitor-B (chip)	0.0100 50V K				01
	C0007	**US062100**	Ceramic Capacitor-SL(chip)	100P 50V J				01
	C0008	**US064100**	Ceramic Capacitor-B (chip)	0.0100 50V K				01
	C0009	**US062100**	Ceramic Capacitor-SL(chip)	100P 50V J				01
	C0010	**US064100**	Ceramic Capacitor-B (chip)	0.0100 50V K				01
	C0011	**US062100**	Ceramic Capacitor-SL(chip)	100P 50V J				01
	-0022	**US062100**	Ceramic Capacitor-SL(chip)	100P 50V J				01
	C0023	**US064100**	Ceramic Capacitor-B (chip)	0.0100 50V K				01
	C0024	**US062100**	Ceramic Capacitor-SL(chip)	100P 50V J				01
	C0025	**US062100**	Ceramic Capacitor-SL(chip)	100P 50V J				01
	C0026	**UF066100**	Electrolytic Cap. (chip)	1 50V				01
	C0027	**US064100**	Ceramic Capacitor-B (chip)	0.0100 50V K				01
	-0030	**US064100**	Ceramic Capacitor-B (chip)	0.0100 50V K				01
	C0031	**UF028100**	Electrolytic Cap. (chip)	100 10V				01
	C0032	**US064100**	Ceramic Capacitor-B (chip)	0.0100 50V K				01
	C0033	**US062100**	Ceramic Capacitor-SL(chip)	100P 50V J				01
	C0034	**US062100**	Ceramic Capacitor-SL(chip)	100P 50V J				01
	C0035	**US064100**	Ceramic Capacitor-B (chip)	0.0100 50V K				01
	C0036	**US064100**	Ceramic Capacitor-B (chip)	0.0100 50V K				01
	C0037	**UF037100**	Electrolytic Cap. (chip)	10 16V				01
	C0038	**US064100**	Ceramic Capacitor-B (chip)	0.0100 50V K				01
	C0040	**UF047100**	Electrolytic Cap. (chip)	10 25V				01
	C0041	**US064100**	Ceramic Capacitor-B (chip)	0.0100 50V K				01
	C0042	**UF057100**	Electrolytic Cap. (chip)	10 35V				01
	C0043	**US064100**	Ceramic Capacitor-B (chip)	0.0100 50V K				01
	C0044	**UF018100**	Electrolytic Cap. (chip)	100 6.3V				01
	C0045	**US061220**	Ceramic Capacitor-CH(chip)	22P 50V J				01
	C0046	**US064100**	Ceramic Capacitor-B (chip)	0.0100 50V K				01
	C0047	**US061220**	Ceramic Capacitor-CH(chip)	22P 50V J				01
	C0048	**US062470**	Ceramic Capacitor-SL(chip)	470P 50V J				01
	C0049	**US062470**	Ceramic Capacitor-SL(chip)	470P 50V J				01
	C0050	**US063100**	Ceramic Capacitor-B (chip)	1000P 50V K				01
	C0052	**UF037100**	Electrolytic Cap. (chip)	10 16V				01
	C0053	**US064100**	Ceramic Capacitor-B (chip)	0.0100 50V K				01
	-0062	**US064100**	Ceramic Capacitor-B (chip)	0.0100 50V K				01
	C0064	**US064100**	Ceramic Capacitor-B (chip)	0.0100 50V K				01

*: New Parts

RANK: Japan only

REF NO.	PART NO.	DESCRIPTION			REMARKS	QTY	RANK
C0065	**US064100**	Ceramic Capacitor-B (chip)	0.0100 50V K				01
C0067	**US064100**	Ceramic Capacitor-B (chip)	0.0100 50V K				01
C0068	**US064100**	Ceramic Capacitor-B (chip)	0.0100 50V K				01
C0076	**US064100**	Ceramic Capacitor-B (chip)	0.0100 50V K				01
C0079	**US064100**	Ceramic Capacitor-B (chip)	0.0100 50V K				01
C0080	**US064100**	Ceramic Capacitor-B (chip)	0.0100 50V K				01
C0084	**US064100**	Ceramic Capacitor-B (chip)	0.0100 50V K				01
C0089	**US064100**	Ceramic Capacitor-B (chip)	0.0100 50V K				01
C0090	**US064100**	Ceramic Capacitor-B (chip)	0.0100 50V K				01
C0095	**US064100**	Ceramic Capacitor-B (chip)	0.0100 50V K				01
C0097	**US064100**	Ceramic Capacitor-B (chip)	0.0100 50V K				01
-0099	**US064100**	Ceramic Capacitor-B (chip)	0.0100 50V K				01
C0100	**UF037100**	Electrolytic Cap. (chip)	10 16V				01
C0102	**US064100**	Ceramic Capacitor-B (chip)	0.0100 50V K				01
-0105	**US064100**	Ceramic Capacitor-B (chip)	0.0100 50V K				01
C0108	**UF037100**	Electrolytic Cap. (chip)	10 16V				01
C0110	**US064100**	Ceramic Capacitor-B (chip)	0.0100 50V K				01
-0119	**US064100**	Ceramic Capacitor-B (chip)	0.0100 50V K				01
C0122	**US064100**	Ceramic Capacitor-B (chip)	0.0100 50V K				01
C0123	**UF037100**	Electrolytic Cap. (chip)	10 16V				01
C0124	**US064100**	Ceramic Capacitor-B (chip)	0.0100 50V K				01
C0126	**US064100**	Ceramic Capacitor-B (chip)	0.0100 50V K				01
-0129	**US064100**	Ceramic Capacitor-B (chip)	0.0100 50V K				01
C0135	**US062100**	Ceramic Capacitor-SL(chip)	100P 50V J				01
-0137	**US062100**	Ceramic Capacitor-SL(chip)	100P 50V J				01
C0138	**US064100**	Ceramic Capacitor-B (chip)	0.0100 50V K				01
-0140	**US064100**	Ceramic Capacitor-B (chip)	0.0100 50V K				01
C0141	**US062100**	Ceramic Capacitor-SL(chip)	100P 50V J				01
C0142	**US064100**	Ceramic Capacitor-B (chip)	0.0100 50V K				01
C0143	**UF148100**	Electrolytic Cap. (chip)	100 25V UUR1E1				01
C0144	**UF037100**	Electrolytic Cap. (chip)	10 16V				01
C0145	**US064100**	Ceramic Capacitor-B (chip)	0.0100 50V K				01
C0146	**US064100**	Ceramic Capacitor-B (chip)	0.0100 50V K				01
C0147	**US135100**	Ceramic Capacitor-F (chip)	0.1000 16V Z				01
C0148	**US135100**	Ceramic Capacitor-F (chip)	0.1000 16V Z				01
C0149	**US063220**	Ceramic Capacitor-B (chip)	2200P 50V K				01
C0150	**US064100**	Ceramic Capacitor-B (chip)	0.0100 50V K				01
C0152	**US135100**	Ceramic Capacitor-F (chip)	0.1000 16V Z				01
C0154	**UF037220**	Electrolytic Cap. (chip)	22 16V				01
C0155	**UF037100**	Electrolytic Cap. (chip)	10 16V				01
C0156	**US064100**	Ceramic Capacitor-B (chip)	0.0100 50V K				01
C0158	**US135100**	Ceramic Capacitor-F (chip)	0.1000 16V Z				01
C0159	**US064100**	Ceramic Capacitor-B (chip)	0.0100 50V K				01
C0161	**UF046470**	Electrolytic Cap. (chip)	4.7 25V				01
-0164	**UF046470**	Electrolytic Cap. (chip)	4.7 25V				01
C0165	**US061270**	Ceramic Capacitor-CH(chip)	27P 50V J				01
C0166	**US061270**	Ceramic Capacitor-CH(chip)	27P 50V J				01
C0169	**US135100**	Ceramic Capacitor-F (chip)	0.1000 16V Z				01
C0170	**US135100**	Ceramic Capacitor-F (chip)	0.1000 16V Z				01
C0171	**US062330**	Ceramic Capacitor-SL(chip)	330P 50V J				01
C0172	**US062330**	Ceramic Capacitor-SL(chip)	330P 50V J				01
C0176	**US062220**	Ceramic Capacitor-SL(chip)	220P 50V J				01
-0179	**US062220**	Ceramic Capacitor-SL(chip)	220P 50V J				01
C0181	**UF037100**	Electrolytic Cap. (chip)	10 16V				01
C0182	**UF037220**	Electrolytic Cap. (chip)	22 16V				01
C0183	**UF037220**	Electrolytic Cap. (chip)	22 16V				01
C0186	**US063220**	Ceramic Capacitor-B (chip)	2200P 50V K				01
C0187	**US063220**	Ceramic Capacitor-B (chip)	2200P 50V K				01
C0189	**UF037100**	Electrolytic Cap. (chip)	10 16V				01
C0190	**US064100**	Ceramic Capacitor-B (chip)	0.0100 50V K				01
C0195	**US064100**	Ceramic Capacitor-B (chip)	0.0100 50V K				01
C0196	**UF047100**	Electrolytic Cap. (chip)	10 25V				01
C0197	**US064100**	Ceramic Capacitor-B (chip)	0.0100 50V K				01
-0200	**US064100**	Ceramic Capacitor-B (chip)	0.0100 50V K				01
C0201	**UF017220**	Electrolytic Cap. (chip)	22 6.3V				01
C0202	**UF017220**	Electrolytic Cap. (chip)	22 6.3V				01
C0203	**US064100**	Ceramic Capacitor-B (chip)	0.0100 50V K				01
-0213	**US064100**	Ceramic Capacitor-B (chip)	0.0100 50V K				01
C0214	**US062100**	Ceramic Capacitor-SL(chip)	100P 50V J				01
C0215	**UF017220**	Electrolytic Cap. (chip)	22 6.3V				01

∗: New Parts

RANK: Japan only

	REF NO.	PART NO.	DESCRIPTION			REMARKS	QTY	RANK
	C0216	**US064100**	Ceramic Capacitor-B (chip)	0.0100 50V K				01
	C0217	**US061680**	Ceramic Capacitor-SL(chip)	68P 50V J				01
	C0218	**US064100**	Ceramic Capacitor-B (chip)	0.0100 50V K				01
	-0222	**US064100**	Ceramic Capacitor-B (chip)	0.0100 50V K				01
	C0226	**US064100**	Ceramic Capacitor-B (chip)	0.0100 50V K				01
	C0227	**US063100**	Ceramic Capacitor-B (chip)	1000P 50V K				01
	C0228	**US064100**	Ceramic Capacitor-B (chip)	0.0100 50V K				01
	C0229	**US064100**	Ceramic Capacitor-B (chip)	0.0100 50V K				01
	CN001	**VQ391300**	Connector	34P TE				03
	CN002	**LB918030**	Base Post Connector	XH 3P TE				01
	CN003	**VB390300**	Connector Base Post	PH 7P TE				01
	CN004	**VB390100**	Connector Base Post	PH 5P TE				01
	CN005	**VB390600**	Connector Base Post	PH 10P TE				01
	CN006	**VB390400**	Connector Base Post	PH 8P TE				01
	CN007	**VV878100**	Connector Base Post	DF13-14P-1.25DSA				04
	CN009	**VB390700**	Connector Base Post	PH 11P TE				01
	CN010	**VM673300**	Header	HIF3FC26PA-2.54DSA				03
	CN012	**VB390800**	Connector Base Post	PH 12P TE				01
	D0002	**VB493900**	Diode	MA221				01
	D0004	**VB493900**	Diode	MA221				01
	D0005	**VB493900**	Diode	MA221				01
	D0008	**VV925900**	Diode	RLS-73 TE-11				01
	D0009	**VB493900**	Diode	MA221				01
	D0010	**VB493900**	Diode	MA221				01
	IC001	**XT744A00**	IC	TC74VHCT245AFT		BUFFER		07
	IC002	**IS000800**	IC	HD74LV08AFPEL		AND		01
	IC003	**XR115A00**	IC	UPD43256BGU-70L		SRAM 256K		08
	IC003	**XT090A00**	IC	SRM2B256SLMX70				07
	IC003	**XV411A00**	IC	W24258S-70LE-EL10				07
	IC003	**XW433A00**	IC	CY62256LL-70SNCT				05
	IC003	**XZ388A00**	IC	W24257S-70LL-EL10				05
*	IC004	**X0158A00**	IC	SN74AHCT1G08DCKR		CLOCK		01
	IC005	**XS516A00**	IC	UPC2933T-E1		REGULATOR +3.3V		03
	IC007	**XE054A00**	IC	TC4069UBF-EL		INVERTER		01
	IC008	**XQ595A00**	IC	S1D13305F00B100		LCDC		08
	IC009	**XI939A00**	IC	HD63266F		FDC		09
*	IC011	**XZ286A00**	IC	74LVC245APW		BUFFER		02
*	IC012	**XZ286A00**	IC	74LVC245APW		BUFFER		02
*	IC013	**X0010A00**	IC	HD74LV21ATELL		AND		01
	IC015	**XT744A00**	IC	TC74VHCT245AFT		BUFFER		07
*	IC016	**XZ286A00**	IC	74LVC245APW		BUFFER		02
	IC017	**XT744A00**	IC	TC74VHCT245AFT		BUFFER		07
	IC018	**XV250B00**	IC	HD6417709F80B		CPU		11
	IC020	**XT744A00**	IC	TC74VHCT245AFT		BUFFER		07
	IC021	**XS048A00**	IC	HD74LVC139FPEL		DECODER		03
	IC022	**XY099A00**	IC	K4S643232C-TC80000		SDRAM 64M		15
	IC022	**XY781A00**	IC	HY57V653220BCT-10				15
	IC022	**X0176A00**	IC	W986432DH-7				15
	IC022	**X0493A00**	IC	K4S643232E-TC60				
	IC022	**X0494A00**	IC	K4S643232E-TC70				15
*	IC024	**X0183F00**	IC			FLASH ROM 64M MAIN-L		
*	IC025	**X0184F00**	IC			FLASH ROM 64M MAIN-H		
	IC026	**XV833A00**	IC	MBCG46183-129		SIO4 (GATE ARRAY)		06
	IC027	**XY782A00**	IC	AD1854JRSRL		DAC		05
	IC028	**XW792A00**	IC	SN74HC132NSR		NAND		01
	IC028	**XY352A00**	IC	MM74HC132SJX		NAND		02
*	IC029	**X0187200**	IC	MX23L6410		MASK ROM 64M PARA/STYLE		
	IC031	**XF291A00**	IC	UPC4570G2		OP AMP		03
	IC033	**XU948A00**	IC	MBM29F800BA-70PFTN		FLASH ROM 8M		14
	IC034	**XJ598A00**	IC	NJM78L05UA		REGULATOR +5V		02
	IC035	**XU462A00**	IC	MSM514260C-60TS-K		DRAM 4M		08
	IC035	**XU462B00**	IC	MSM514260E-60TS-K				07
	IC035	**XW732A00**	IC	SDM4260CLTM-6S				07
	IC036	**XU947C00**	IC	HG73C205AFD		SWX00B		09
*	IC038	**X0033100**	IC			MASK ROM 128M WAVE		15
*	IC039	**X0158A00**	IC	SN74AHCT1G08DCKR		CLOCK		01
*	IC043	**IS037400**	IC	HD74LV374AFPEL		D-FF		02
*	IC043	**IS037410**	IC	SN74LV374ANSR				
	IC044	**X0506A00**	IC	M5233FP-600D		COMPARATOR		
	IC045	**XW792A00**	IC	SN74HC132NSR		NAND		01

*: New Parts

RANK: Japan only

REF NO.	PART NO.	DESCRIPTION			REMARKS	QTY	RANK
L0001	**VY657200**	Chip Inductance	600 BK1608HM601				01
-0012	**VY657200**	Chip Inductance	600 BK1608HM601				01
L0014	**VR243700**	Chip Inductance	56U LEM2520 T 560J				01
L0015	**VR243700**	Chip Inductance	56U LEM2520 T 560J				01
L0016	**VD473700**	Coil	SBT-0460TF 60uH				02
-0020	**VD473700**	Coil	SBT-0460TF 60uH				02
R0001	**RD357100**	Carbon Resistor (chip)	10K 63M J				01
R0003	**RD355100**	Carbon Resistor (chip)	100 63M J				01
-0005	**RD355100**	Carbon Resistor (chip)	100 63M J				01
R0008	**RD357100**	Carbon Resistor (chip)	10K 63M J				01
R0009	**RD355100**	Carbon Resistor (chip)	100 63M J				01
R0010	**RD357100**	Carbon Resistor (chip)	10K 63M J				01
R0011	**RD355470**	Carbon Resistor (chip)	470 63M J				01
-0022	**RD355470**	Carbon Resistor (chip)	470 63M J				01
R0023	**RD354680**	Carbon Resistor (chip)	68 63M J				01
R0024	**RD355100**	Carbon Resistor (chip)	100 63M J				01
R0025	**RD354680**	Carbon Resistor (chip)	68 63M J				01
R0026	**RD354680**	Carbon Resistor (chip)	68 63M J				01
R0027	**RD355100**	Carbon Resistor (chip)	100 63M J				01
-0037	**RD355100**	Carbon Resistor (chip)	100 63M J				01
R0038	**RD354680**	Carbon Resistor (chip)	68 63M J				01
-0040	**RD354680**	Carbon Resistor (chip)	68 63M J				01
R0049	**RD355330**	Carbon Resistor (chip)	330 63M J				01
R0050	**RD357100**	Carbon Resistor (chip)	10K 63M J				01
-0055	**RD357100**	Carbon Resistor (chip)	10K 63M J				01
R0056	**RD350000**	Carbon Resistor (chip)	0 63M J				01
R0057	**RD357100**	Carbon Resistor (chip)	10K 63M J				01
-0066	**RD357100**	Carbon Resistor (chip)	10K 63M J				01
R0067	**RD354680**	Carbon Resistor (chip)	68 63M J				01
R0068	**RD357100**	Carbon Resistor (chip)	10K 63M J				01
R0070	**RD357100**	Carbon Resistor (chip)	10K 63M J				01
R0072	**RD357100**	Carbon Resistor (chip)	10K 63M J				01
R0074	**RD357100**	Carbon Resistor (chip)	10K 63M J				01
R0075	**RD357100**	Carbon Resistor (chip)	10K 63M J				01
R0076	**RD354680**	Carbon Resistor (chip)	68 63M J				01
R0077	**RD354680**	Carbon Resistor (chip)	68 63M J				01
R0078	**RD357100**	Carbon Resistor (chip)	10K 63M J				01
R0080	**RD357100**	Carbon Resistor (chip)	10K 63M J				01
R0081	**RD354680**	Carbon Resistor (chip)	68 63M J				01
R0082	**RD357100**	Carbon Resistor (chip)	10K 63M J				01
R0083	**RD354680**	Carbon Resistor (chip)	68 63M J				01
R0084	**RD354680**	Carbon Resistor (chip)	68 63M J				01
R0085	**RD357100**	Carbon Resistor (chip)	10K 63M J				01
R0086	**RD354680**	Carbon Resistor (chip)	68 63M J				01
R0087	**RD357100**	Carbon Resistor (chip)	10K 63M J				01
R0088	**RD357100**	Carbon Resistor (chip)	10K 63M J				01
R0089	**RD354680**	Carbon Resistor (chip)	68 63M J				01
R0091	**RD357100**	Carbon Resistor (chip)	10K 63M J				01
R0092	**RD357100**	Carbon Resistor (chip)	10K 63M J				01
R0093	**RD354680**	Carbon Resistor (chip)	68 63M J				01
R0094	**RD354680**	Carbon Resistor (chip)	68 63M J				01
R0095	**RD357100**	Carbon Resistor (chip)	10K 63M J				01
R0096	**RD354680**	Carbon Resistor (chip)	68 63M J				01
R0097	**RD357100**	Carbon Resistor (chip)	10K 63M J				01
R0098	**RD354680**	Carbon Resistor (chip)	68 63M J				01
R0099	**RD354680**	Carbon Resistor (chip)	68 63M J				01
R0100	**RD357100**	Carbon Resistor (chip)	10K 63M J				01
R0101	**RD354680**	Carbon Resistor (chip)	68 63M J				01
R0102	**RD354680**	Carbon Resistor (chip)	68 63M J				01
R0103	**RD357100**	Carbon Resistor (chip)	10K 63M J				01
R0104	**RD354680**	Carbon Resistor (chip)	68 63M J				01
R0107	**RD354680**	Carbon Resistor (chip)	68 63M J				01
-0115	**RD354680**	Carbon Resistor (chip)	68 63M J				01
R0117	**RD357100**	Carbon Resistor (chip)	10K 63M J				01
R0118	**RD354680**	Carbon Resistor (chip)	68 63M J				01
-0121	**RD354680**	Carbon Resistor (chip)	68 63M J				01
R0124	**RD357100**	Carbon Resistor (chip)	10K 63M J				01
R0126	**RD357100**	Carbon Resistor (chip)	10K 63M J				01
R0128	**RD357100**	Carbon Resistor (chip)	10K 63M J				01
R0138	**RD354680**	Carbon Resistor (chip)	68 63M J				01

∗: New Parts

RANK: Japan only

REF NO.	PART NO.	DESCRIPTION			REMARKS	QTY	RANK
R0140	**RD357100**	Carbon Resistor (chip)	10K 63M J				01
R0141	**RD354680**	Carbon Resistor (chip)	68 63M J				01
R0142	**RD358470**	Carbon Resistor (chip)	470K 63M J				01
R0144	**RD356100**	Carbon Resistor (chip)	1.0K 63M J				01
R0145	**RD354680**	Carbon Resistor (chip)	68 63M J				01
R0146	**RD358470**	Carbon Resistor (chip)	470K 63M J				01
R0149	**RD356100**	Carbon Resistor (chip)	1.0K 63M J				01
R0150	**RD354680**	Carbon Resistor (chip)	68 63M J				01
R0151	**RD357100**	Carbon Resistor (chip)	10K 63M J				01
R0152	**RD354680**	Carbon Resistor (chip)	68 63M J				01
R0154	**RD356100**	Carbon Resistor (chip)	1.0K 63M J				01
R0155	**RD354680**	Carbon Resistor (chip)	68 63M J				01
R0156	**RD358470**	Carbon Resistor (chip)	470K 63M J				01
R0157	**RD354680**	Carbon Resistor (chip)	68 63M J				01
R0159	**RD354680**	Carbon Resistor (chip)	68 63M J				01
R0162	**RD356100**	Carbon Resistor (chip)	1.0K 63M J				01
R0163	**RD357100**	Carbon Resistor (chip)	10K 63M J				01
R0169	**RD354680**	Carbon Resistor (chip)	68 63M J				01
R0171	**RD354680**	Carbon Resistor (chip)	68 63M J				01
R0181	**RD354680**	Carbon Resistor (chip)	68 63M J				01
R0183	**RD354680**	Carbon Resistor (chip)	68 63M J				01
-0185	**RD354680**	Carbon Resistor (chip)	68 63M J				01
R0218	**RD354680**	Carbon Resistor (chip)	68 63M J				01
R0219	**RD354680**	Carbon Resistor (chip)	68 63M J				01
R0221	**RD357100**	Carbon Resistor (chip)	10K 63M J				01
-0224	**RD357100**	Carbon Resistor (chip)	10K 63M J				01
R0225	**RD354680**	Carbon Resistor (chip)	68 63M J				01
-0228	**RD354680**	Carbon Resistor (chip)	68 63M J				01
R0229	**RD354100**	Carbon Resistor (chip)	10 63M J				01
-0231	**RD354100**	Carbon Resistor (chip)	10 63M J				01
R0237	**RD354100**	Carbon Resistor (chip)	10 63M J				01
R0238	**RD357100**	Carbon Resistor (chip)	10K 63M J				01
-0241	**RD357100**	Carbon Resistor (chip)	10K 63M J				01
R0242	**RD355100**	Carbon Resistor (chip)	100 63M J				01
-0244	**RD355100**	Carbon Resistor (chip)	100 63M J				01
R0245	**RD357100**	Carbon Resistor (chip)	10K 63M J				01
-0247	**RD357100**	Carbon Resistor (chip)	10K 63M J				01
R0248	**RD357470**	Carbon Resistor (chip)	47K 63M J				01
R0250	**RD354100**	Carbon Resistor (chip)	10 63M J				01
R0252	**RD359100**	Carbon Resistor (chip)	1.0M 63M J				01
R0253	**RD355100**	Carbon Resistor (chip)	100 63M J				01
R0254	**RD356560**	Carbon Resistor (chip)	5.6K 63M J				01
-0257	**RD356560**	Carbon Resistor (chip)	5.6K 63M J				01
R0258	**RD357100**	Carbon Resistor (chip)	10K 63M J				01
R0259	**RD358470**	Carbon Resistor (chip)	470K 63M J				01
R0260	**RD358470**	Carbon Resistor (chip)	470K 63M J				01
R0264	**RD356560**	Carbon Resistor (chip)	5.6K 63M J				01
R0265	**RD356560**	Carbon Resistor (chip)	5.6K 63M J				01
R0267	**RD356560**	Carbon Resistor (chip)	5.6K 63M J				01
R0268	**RD356560**	Carbon Resistor (chip)	5.6K 63M J				01
R0269	**RD357220**	Carbon Resistor (chip)	22K 63M J				01
R0270	**RD357100**	Carbon Resistor (chip)	10K 63M J				01
R0271	**RD357220**	Carbon Resistor (chip)	22K 63M J				01
R0276	**RD357100**	Carbon Resistor (chip)	10K 63M J				01
R0277	**RD356100**	Carbon Resistor (chip)	1.0K 63M J				01
R0278	**RD356820**	Carbon Resistor (chip)	8.2K 63M J				01
R0279	**RD357100**	Carbon Resistor (chip)	10K 63M J				01
R0280	**RD357100**	Carbon Resistor (chip)	10K 63M J				01
R0281	**RD355220**	Carbon Resistor (chip)	220 63M J				01
R0282	**RD355220**	Carbon Resistor (chip)	220 63M J				01
R0283	**RD356270**	Carbon Resistor (chip)	2.7K 63M J				01
R0286	**RD357100**	Carbon Resistor (chip)	10K 63M J				01
R0292	**RD357100**	Carbon Resistor (chip)	10K 63M J				01
-0294	**RD357100**	Carbon Resistor (chip)	10K 63M J				01
R0295	**RD355220**	Carbon Resistor (chip)	220 63M J				01
-0298	**RD355220**	Carbon Resistor (chip)	220 63M J				01
R0299	**RD357100**	Carbon Resistor (chip)	10K 63M J				01
R0300	**RD350000**	Carbon Resistor (chip)	0 63M J				01
R0301	**RD350000**	Carbon Resistor (chip)	0 63M J				01
R0302	**RD357100**	Carbon Resistor (chip)	10K 63M J				01

∗: New Parts

RANK: Japan only

	REF NO.	PART NO.	DESCRIPTION		REMARKS	QTY	RANK
	R0303	**RD357100**	Carbon Resistor (chip)	10K 63M J			01
	R0304	**RD354680**	Carbon Resistor (chip)	68 63M J			01
	R0305	**RD350000**	Carbon Resistor (chip)	0 63M J			01
	R0306	**RD355100**	Carbon Resistor (chip)	100 63M J			01
	R0307	**RD356100**	Carbon Resistor (chip)	1.0K 63M J			01
	R0308	**RD357100**	Carbon Resistor (chip)	10K 63M J			01
	-0317	**RD357100**	Carbon Resistor (chip)	10K 63M J			01
	R0319	**RD350000**	Carbon Resistor (chip)	0 63M J			01
	R0320	**RD350000**	Carbon Resistor (chip)	0 63M J			01
	R0322	**RD350000**	Carbon Resistor (chip)	0 63M J			01
	R0323	**RD357100**	Carbon Resistor (chip)	10K 63M J			01
	R0325	**RD356100**	Carbon Resistor (chip)	1.0K 63M J			01
	R0326	**RD357100**	Carbon Resistor (chip)	10K 63M J			01
	R0327	**RD358470**	Carbon Resistor (chip)	470K 63M J			01
	R0328	**RD357100**	Carbon Resistor (chip)	10K 63M J			01
	R0329	**RD354680**	Carbon Resistor (chip)	68 63M J			01
	RA001	**RE044680**	Resistor Array	68X4			01
	-015	**RE044680**	Resistor Array	68X4			01
	RY001	**V2902800**	Relay	DC NAS-5W-K-TN 5V			04
	SW001	**V3026900**	Switch	CHS-01 TA1	ON:J,OFF:U,E,N		02
	TR004	**VV556400**	Transistor	2SC2412K Q,R,S			01
	TR005	**VJ927200**	Transistor	2SA1162 O,Y			01
	TR006	**VV556400**	Transistor	2SC2412K Q,R,S			01
	X0001	**V3811500**	Ceramic Resonator	16.00MHz CSTCV16.0			01
	X0002	**VR870700**	Quartz Crystal Unit	10MHz SMD-49			04
	X0006	**VS486900**	Quartz Crystal Unit	8.0MHz SMD-49			03
	X0007	**VV335600**	Quartz Crystal Unit	33.8688MHz DSO751S			06
	ZD001	**VU172200**	Zener Diode	UDZS6.8BTE-17 6.8V			01
		- -	Circuit Board	FU60	J (VT15140,XQ395A0)		
		- -	Circuit Board	FU60	U (VT15150,XQ395A0)		
		- -	Circuit Board	FU60	E,B (VT15160,XQ395A0)		
		- -	Circuit Board	FU60	N (VT15290,XQ395A0)		
⚠		**VT308100**	AC Inlet	2P CCT9302-0101M	J,E,B,N		02
⚠		**VT308200**	AC Inlet	2P CCT9302-0201	U		02
⚠		**VT139600**	Voltage Selector	M1684-E	N		04
		LB201530	Fuse Holder	PC-FH1	J,U,E,B	2	01
		LB201530	Fuse Holder	PC-FH1	N	6	01
		- -	Jumper Wire	0.55	(VD04170)		
⚠	C0001	**VT575200**	Capacitor	0.01 400V J.U.C.S			01
⚠	C0002	**FI383470**	Capacitor	4700P 400V U.C.S.V			01
⚠	C0003	**FI383470**	Capacitor	4700P 400V U.C.S.V			01
	CN001	**LB932030**	Base Post Connector	VH 3P TE			01
	CN002	**LB932060**	Base Post Connector	VH 6P TE			01
⚠	F0001	**KB003590**	Fuse	3.00A JU	J,U,N		01
⚠	F0001	**KB003060**	Fuse	1.60A S	E,B		01
⚠	F0002	**KB003060**	Fuse	1.60A S	N		01
⚠	F0003	**KB003060**	Fuse	1.60A S	N		01
	J0001	**- -**	Jumper Wire	0.55	J,U,E,B (VD04170)		
	L0001	**- -**	Jumper Wire	0.55	(VD04170)		
	L0002	**- -**	Jumper Wire	0.55	(VD04170)		
	L0003	**VF790900**	Coil	SU10V-D20010 10uH			03
		VZ705300	Circuit Board	GH-D_SW H	(XT241A0)		13
		- -	Nonwoven Fabric Cloth		(VU45980)		
	CN1	**VB390500**	Connector Base Post	PH 9P TE			03
	CN2	**VB390800**	Connector Base Post	PH 12P TE			01
	D1	**VB941200**	Diode	1SS133,1SS176			01
	-108	**VB941200**	Diode	1SS133,1SS176			01
		V7817100	Circuit Board	GH-DclSW L	(XT240A0)		
		- -	Nonwoven Fabric Cloth		(VU45960)		
	C1	**FG644100**	Ceramic Capacitor-F	0.0100 50V Z			01
	-3	**FG644100**	Ceramic Capacitor-F	0.0100 50V Z			01
	C5	**VF760000**	Electrolytic Cap.-KS	100.00 10.0V			01
	CL1	**VI653000**	Ceramic Resonator	CST4.00MGW040			01
	CN1	**VB390400**	Connector Base Post	PH 8P TE			01
	CN2	**VB390500**	Connector Base Post	PH 9P TE			03
	CN3	**VB390800**	Connector Base Post	PH 12P TE			01
	D5	**VB941200**	Diode	1SS133,1SS176			01

∗: New Parts

RANK: Japan only

	REF NO.	PART NO.	DESCRIPTION			REMARKS	QTY	RANK
	-72	**VB941200**	Diode	1SS133,1SS176				01
	J1	**- -**	Jumper Wire	0.55		(VD04170)		
	J2	**- -**	Jumper Wire	0.55		(VD04170)		
	KSN2	**XR632A00**	IC	YMZ702-D		KSN2		09
	R1	**HF759100**	Carbon Resistor	1.0M 1/4 J				01
	R2	**HF755100**	Carbon Resistor	100.0 1/4 J				01
	R3	**HF755100**	Carbon Resistor	100.0 1/4 J				01
	R4	**HF756100**	Carbon Resistor	1.0K 1/4 J				01
	RA1	**VU483500**	Resistor Array	RGLD12X103J				01
*		**V7135900**	Circuit Board	GLC		(XZ883B0)		
*		**V7135800**	Circuit Board	GLL		(XZ883B0)		
*		**V7136100**	Circuit Board	GLR		(XZ883B0)		
*	LD001	**V7446700**	LED	SLI-343URT		Keyboard guide lamp		01
*	-088	**V7446700**	LED	SLI-343URT		Keyboard guide lamp		01
	WH001	**- -**	Connector Assembly	GL1		(V753060)		
	WH002	**- -**	Connector Assembly	GL2		(V753070)		
	WH003	**- -**	Connector Assembly	GL1		(V753060)		
		VT089300	Circuit Board	HP		(XQ390A0)		09
		V0047600	Circuit Board	HP (YI)		(XQ389A0,XQ390A0)		
		- -	Jumper Wire	0.55		(VD04170)		
		VT890700	GND Wire	L=150mm				01
	C1	**VE659000**	Semiconductive Cera. Cap.	0.1000 25V Z				01
	-5	**VE659000**	Semiconductive Cera. Cap.	0.1000 25V Z				01
	CN1	**VB858600**	Connector Base Post	PH 7P SE				01
	CN2	**VB858100**	Connector Base Post	PH 2P SE				01
	HP1	**LB101870**	Phone Jack	YKB21-5006		PHONES		03
	HP2	**LB101870**	Phone Jack	YKB21-5006		PHONES		03
	L1	**VB971100**	Coil	FL5R200QN 20uH				01
	-6	**VB971100**	Coil	FL5R200QN 20uH				01
	R1	**VK992200**	Carbon Resistor	68.0 1/2 J				01
	-4	**VK992200**	Carbon Resistor	68.0 1/2 J				01
	R1	**V3609100**	Carbon Resistor	68.0 1/2 J				
	-4	**V3609100**	Carbon Resistor	68.0 1/2 J				
*		**V7170200**	Circuit Board	INV		(XZ881C0)		
*		**V7134700**	Circuit Board	MV		(XZ881C0)		
*		**V7135100**	Circuit Board	PNCB		(XZ881C0)		
*		**V7134600**	Circuit Board	PNL		(XZ881C0)		
		- -	Jumper Wire	0.55		(VA07890)		
	C0301	**UA353220**	Mylar Capacitor	2200P 50V J				01
	C0302	**VR169200**	Monolithic Mylar Capacitor	ECQ-V1H474JL3				01
	C0303	**VR169200**	Monolithic Mylar Capacitor	ECQ-V1H474JL3				01
	C0304	**UA353220**	Mylar Capacitor	2200P 50V J				01
	C0401	**VP318400**	Electrolytic Cap. (chip)	0.068 250 ECQE26				01
	C0402	**VS147400**	Ceramic Capacitor-SL	18P 3KV J				01
	C0404	**UR838100**	Electrolytic Cap.	100.00 16.0V				01
	CN001	**VB858900**	Connector Base Post	PH 10P SE				01
	CN002	**VB858700**	Connector Base Post	PH 8P SE				01
	CN003	**VC166500**	Connector Base Post	PH 12P SE				01
	CN004	**VK015400**	Connector Base Post	PH 13P SE				01
	CN005	**VK015400**	Connector Base Post	PH 13P SE				01
	CN006	**VH904200**	Connector Base Post	PH 14P SE				01
	CN201	**VK015400**	Connector Base Post	PH 13P SE				01
	CN301	**VB858700**	Connector Base Post	PH 8P SE				01
	CN401	**LB919030**	Base Post Connector	XH 3P SE				01
	CN402	**VT389600**	Base Post Connector	53259 4P SE				01
	D0001	**VB941200**	Diode	1SS133,1SS176				01
	-0030	**VB941200**	Diode	1SS133,1SS176				01
	D0201	**VB941200**	Diode	1SS133,1SS176				01
	-0218	**VB941200**	Diode	1SS133,1SS176				01
	D0401	**VD631600**	Diode	1SS133,176,HSS104				01
	J0401	**- -**	Jumper Wire	0.55		(VA07890)		
	L0401	**VS587900**	Coil	LH L 08TB221K 220u				01
	L0402	**VS587900**	Coil	LH L 08TB221K 220u				01
	L0403	**- -**	Jumper Wire	0.55		(VA07890)		
	L0404	**- -**	Jumper Wire	0.55		(VA07890)		
*	LD001	**V7767400**	LED Red	SLZ-981B-09-T1		METRONOME(START/STOP)		
*	LD002	**V7767400**	LED Red	SLZ-981B-09-T1		FADE IN/OUT		

*: New Parts

RANK: Japan only

	REF NO.	PART NO.	DESCRIPTION			REMARKS	QTY	RANK
*	LD003	**V7767400**	LED Red	SLZ-981B-09-T1		STYLE(ACMP)		
*	LD004	**V7767400**	LED Red	SLZ-981B-09-T1		STYLE(AUTO FILL IN)		
*	LD005	**V7767400**	LED Red	SLZ-981B-09-T1		STYLE(OTS LINK)		
*	LD006	**V7481600**	LED Green/Red	GL3ED403B0V		STYLE(BREAK)		01
*	LD007	**V7481600**	LED Green/Red	GL3ED403B0V		SONG(EXTRA TRACKS)		01
*	LD008	**V7767400**	LED Red	SLZ-981B-09-T1		SONG(REC)		
*	LD009	**V7481600**	LED Green/Red	GL3ED403B0V		STYLE(INTRO)		01
*	LD010	**V7481600**	LED Green/Red	GL3ED403B0V		SONG(TRACK 2)		01
*	LD011	**V7481600**	LED Green/Red	GL3ED403B0V		STYLE(MAIN A)		01
*	LD012	**V7481600**	LED Green/Red	GL3ED403B0V		SONG(TRACK 1)		01
*	LD013	**V7481600**	LED Green/Red	GL3ED403B0V		SONG(START/STOP)		01
*	LD014	**V7481600**	LED Green/Red	GL3ED403B0V		STYLE(MAIN B)		01
*	LD015	**V7481600**	LED Green/Red	GL3ED403B0V		STYLE(MAIN C)		01
*	LD016	**V7481600**	LED Green/Red	GL3ED403B0V		STYLE(MAIN D)		01
*	LD017	**V7767400**	LED Red	SLZ-981B-09-T1		SONG(REPEAT)		
*	LD018	**V7481600**	LED Green/Red	GL3ED403B0V		STYLE(ENDING/rlt.)		01
*	LD019	**V7767400**	LED Red	SLZ-981B-09-T1		SONG(GUIDE)		
*	LD020	**V7767400**	LED Red	SLZ-981B-09-T1		STYLE(SYNC.STOP)		
*	LD021	**V7767400**	LED Red	SLZ-981B-09-T1		STYLE(SYNC.START)		
*	LD022	**V7481600**	LED Green/Red	GL3ED403B0V		STYLE(START/STOP)		01
	R0001	**HF754820**	Carbon Resistor	82.0 1/4 J				01
	-0012	**HF754820**	Carbon Resistor	82.0 1/4 J				01
	R0301	**HF756390**	Carbon Resistor	3.9K 1/4 J				01
	R0302	**HF756180**	Carbon Resistor	1.8K 1/4 J				01
	R0303	**HF756180**	Carbon Resistor	1.8K 1/4 J				01
	R0304	**HF756390**	Carbon Resistor	3.9K 1/4 J				01
	R0401	**HF456150**	Carbon Resistor	1.5K 1/4 J				01
	R0402	**HF456270**	Carbon Resistor	2.7K 1/4 J				01
	R0404	**HF457220**	Carbon Resistor	22.0K 1/4 J				01
	SW001	**VV439800**	Tact Switch	SKQNAJ		METRONOME(START/STOP)		01
	SW002	**VV439800**	Tact Switch	SKQNAJ		FADE IN/OUT		01
	SW003	**VV439800**	Tact Switch	SKQNAJ		STYLE(ACMP)		01
	SW004	**VV439800**	Tact Switch	SKQNAJ		STYLE(AUTO FILL IN)		01
	SW005	**VV439800**	Tact Switch	SKQNAJ		STYLE(OTS LINK)		01
	SW006	**VV439800**	Tact Switch	SKQNAJ		STYLE(BREAK)		01
	SW007	**VV439800**	Tact Switch	SKQNAJ		SONG(EXTRA TRACKS)		01
	SW008	**VV439800**	Tact Switch	SKQNAJ		SONG(REC)		01
	SW009	**VV439800**	Tact Switch	SKQNAJ		TEMPO(-)		01
	SW010	**VV439800**	Tact Switch	SKQNAJ		STYLE(INTRO)		01
	SW011	**VV439800**	Tact Switch	SKQNAJ		SONG(TRACK 2)		01
	SW012	**VV439800**	Tact Switch	SKQNAJ		SONG(TOP)		01
	SW013	**VV439800**	Tact Switch	SKQNAJ		TEMPO(+)		01
	SW014	**VV439800**	Tact Switch	SKQNAJ		STYLE(MAIN A)		01
	SW015	**VV439800**	Tact Switch	SKQNAJ		SONG(TRACK 1)		01
	SW016	**VV439800**	Tact Switch	SKQNAJ		SONG(START/STOP)		01
	SW017	**VV439800**	Tact Switch	SKQNAJ		TEMPO(TAP TEMPO)		01
	SW018	**VV439800**	Tact Switch	SKQNAJ		STYLE(MAIN B)		01
	SW019	**VV439800**	Tact Switch	SKQNAJ		SONG(REW)		01
	SW020	**VV439800**	Tact Switch	SKQNAJ		TRANSPOSE(-)		01
	SW021	**VV439800**	Tact Switch	SKQNAJ		STYLE(MAIN C)		01
	SW022	**VV439800**	Tact Switch	SKQNAJ		SONG(FF)		01
	SW023	**VV439800**	Tact Switch	SKQNAJ		TRANSPOSE(+)		01
	SW024	**VV439800**	Tact Switch	SKQNAJ		STYLE(MAIN D)		01
	SW025	**VV439800**	Tact Switch	SKQNAJ		SONG(REPEAT)		01
	SW026	**VV439800**	Tact Switch	SKQNAJ		STYLE(ENDING/rlt.)		01
	SW027	**VV439800**	Tact Switch	SKQNAJ		SONG(GUIDE)		01
	SW028	**VV439800**	Tact Switch	SKQNAJ		STYLE(SYNC.STOP)		01
	SW029	**VV439800**	Tact Switch	SKQNAJ		STYLE(SYNC.START)		01
	SW030	**VV439800**	Tact Switch	SKQNAJ		STYLE(START/STOP)		01
	SW201	**VV056000**	Tact Switch	SKQNAED010		DIRECT ACCESS		01
	SW202	**VV056000**	Tact Switch	SKQNAED010		LCD select up (1)		01
	SW203	**VV056000**	Tact Switch	SKQNAED010		LCD select down (1)		01
	SW204	**VV056000**	Tact Switch	SKQNAED010		LCD select up (2)		01
	SW205	**VV056000**	Tact Switch	SKQNAED010		LCD select down (2)		01
	SW206	**VV056000**	Tact Switch	SKQNAED010		LCD select up (3)		01
	SW207	**VV056000**	Tact Switch	SKQNAED010		LCD select down (3)		01
	SW208	**VV056000**	Tact Switch	SKQNAED010		LCD select up (4)		01
	SW209	**VV056000**	Tact Switch	SKQNAED010		LCD select down (4)		01
	SW210	**VV056000**	Tact Switch	SKQNAED010		LCD select up (5)		01
	SW211	**VV056000**	Tact Switch	SKQNAED010		LCD select down (5)		01

*: New Parts

RANK: Japan only

	REF NO.	PART NO.	DESCRIPTION			REMARKS	QTY	RANK
	SW212	**VV056000**	Tact Switch	SKQNAED010		LCD select up (6)		01
	SW213	**VV056000**	Tact Switch	SKQNAED010		LCD select down (+6)		01
	SW214	**VV056000**	Tact Switch	SKQNAED010		LCD select up (7)		01
	SW215	**VV056000**	Tact Switch	SKQNAED010		LCD select down (7)		01
	SW216	**VV056000**	Tact Switch	SKQNAED010		LCD select up (8)		01
	SW217	**VV056000**	Tact Switch	SKQNAED010		LCD select down (8)		01
	SW218	**VV056000**	Tact Switch	SKQNAED010		EXIT		01
	T0401	**VS602500**	Inverter Transformer	CLF16A				07
	TR401	**VS185700**	Transistor	2SC3669-O/Y(TPF2)				01
	TR401	**VS185600**	Transistor	2SD1863 TV2 82-390				01
	TR402	**VS185700**	Transistor	2SC3669-O/Y(TPF2)				01
	TR402	**VS185600**	Transistor	2SD1863 TV2 82-390				01
	TR403	**VP872600**	Transistor	2SA1708 S,T				01
*	VR301	**V8333100**	Rotary Variable Resistor	B10K XV0141GPVN 1B		MASTER VOLUME		
		VT143900	Circuit Board	MA60		J,U (XQ393E0,XQ778E0)		18
		VT144000	Circuit Board	MA60		E,B,N (XQ393E0,XQ778E0)		
		VT443500	Support, PCB	T=8				03
		VT740000	Support, PCB	3T-9 T=9			3	03
		VJ834500	Insulation Sheet	#1000				03
		- -	Jumper Wire	0.55		(VD04170)		
	C0001	**VA302600**	Ceramic Capacitor-E	0.0100 500V P				01
	C0003	**VU642700**	Electrolytic Cap.	4700 16.0V				03
	C0003	**V0069900**	Electrolytic Cap.	4700 16.0V				
	C0004	**VU642700**	Electrolytic Cap.	4700 16.0V				03
	C0004	**V0069900**	Electrolytic Cap.	4700 16.0V				
	C0005	**VL232400**	Electrolytic Cap.	3300 35.0V				04
	-0008	**VL232400**	Electrolytic Cap.	3300 35.0V				04
	C0009	**UR866100**	Electrolytic Cap.	1.00 50.0V				01
	-0011	**UR866100**	Electrolytic Cap.	1.00 50.0V				01
	C0012	**FG613100**	Ceramic Capacitor-B	1000P 50V K				01
	C0013	**UR838100**	Electrolytic Cap.	100.00 16.0V				01
	C0016	**UR866100**	Electrolytic Cap.	1.00 50.0V				01
	C0017	**VC694800**	Semiconductive Cera. Cap.	0.1000 25V Z				01
	C0018	**UR866100**	Electrolytic Cap.	1.00 50.0V				01
	C0019	**UR866100**	Electrolytic Cap.	1.00 50.0V				01
	C0020	**UR868100**	Electrolytic Cap.	100.00 50.0V				01
	C0021	**UR868100**	Electrolytic Cap.	100.00 50.0V				01
	C0022	**FG613100**	Ceramic Capacitor-B	1000P 50V K				01
	C0023	**UR866100**	Electrolytic Cap.	1.00 50.0V				01
	C0024	**UR838100**	Electrolytic Cap.	100.00 16.0V				01
	C0025	**VC694800**	Semiconductive Cera. Cap.	0.1000 25V Z				01
	C0026	**VC694800**	Semiconductive Cera. Cap.	0.1000 25V Z				01
	C0027	**FG613100**	Ceramic Capacitor-B	1000P 50V K				01
	C0028	**UR866100**	Electrolytic Cap.	1.00 50.0V				01
	C0029	**UR838100**	Electrolytic Cap.	100.00 16.0V				01
	C0030	**VC694800**	Semiconductive Cera. Cap.	0.1000 25V Z				01
	C0031	**VC694800**	Semiconductive Cera. Cap.	0.1000 25V Z				01
	C0032	**UR838100**	Electrolytic Cap.	100.00 16.0V				01
	C0033	**UR866330**	Electrolytic Cap.	3.30 50.0V				01
	CN001	**LB932050**	Base Post Connector	VH 5P TE				01
	CN003	**LB918030**	Base Post Connector	XH 3P TE				01
	CN004	**VB390300**	Connector Base Post	PH 7P TE				01
	CN005	**LB932040**	Base Post Connector	VH 4P TE				01
	CN006	**VB390500**	Connector Base Post	PH 9P TE				03
	D0001	**VB481900**	Diode	11ES4				01
	-0005	**VB481900**	Diode	11ES4				01
	DB001	**VK421800**	Diode Stack	D5SBA20 6.0A 200V				03
	DB002	**VQ111500**	Diode Stack	D3SBA20-4103 4.0A				03
⚠	F0001	**KB003630**	Fuse	5.00A JU		J,U		01
⚠	-0003	**KB003630**	Fuse	5.00A JU		J,U		01
⚠	F0001	**KB003240**	Fuse	5.00A S		E,B,N		01
⚠	-0003	**KB003240**	Fuse	5.00A S		E,B,N		01
	FUHOL	**VP206500**	Fuse Holder	EYF-52BC			6	01
	IC001	**XQ437A00**	IC	SI-3051N		REGULATOR +5V		03
	IC002	**XQ667A00**	IC	M5237L		REGULATOR +5V		02
	IC003	**XJ602A00**	IC	NJM78M12FA		REGULATOR +12V 0.5A		02
	IC004	**XD343A00**	IC	NJM79M12FA		REGULATOR -12V		03
	IC005	**XL972A00**	IC	STK401-040		POWER AMP.		08
	J0003	**- -**	Jumper Wire	0.55		(VD04170)		

*: New Parts

RANK: Japan only

	REF NO.	PART NO.	DESCRIPTION			REMARKS	QTY	RANK
	J0004	- -	Jumper Wire	0.55		(VD04170)		
	R0003	**HF756100**	Carbon Resistor	1.0K 1/4 J				01
	R0004	**HF755220**	Carbon Resistor	220.0 1/4 J				01
	R0005	**HF754560**	Carbon Resistor	56.0 1/4 J				01
	R0006	**HF757100**	Carbon Resistor	10.0K 1/4 J				01
	R0007	**HF756330**	Carbon Resistor	3.3K 1/4 J				01
	R0008	**HW095100**	Fuse Resistor	100.0 1/4 J				01
	R0009	**HW095100**	Fuse Resistor	100.0 1/4 J				01
	R0010	**HF755560**	Carbon Resistor	560.0 1/4 J				01
	R0011	**HF757100**	Carbon Resistor	10.0K 1/4 J				01
	R0012	**HF755560**	Carbon Resistor	560.0 1/4 J				01
	R0013	**HF757100**	Carbon Resistor	10.0K 1/4 J				01
	R0014	**VC742500**	Metal Oxide Film Resistor	10.0 1W J				01
	R0015	**HF757100**	Carbon Resistor	10.0K 1/4 J				01
	R0016	**HF755560**	Carbon Resistor	560.0 1/4 J				01
	R0017	**HF757100**	Carbon Resistor	10.0K 1/4 J				01
	R0018	**HF755560**	Carbon Resistor	560.0 1/4 J				01
	R0019	**HF757100**	Carbon Resistor	10.0K 1/4 J				01
	R0020	**VC742500**	Metal Oxide Film Resistor	10.0 1W J				01
	R0021	**HF757100**	Carbon Resistor	10.0K 1/4 J				01
	R0022	**HF756330**	Carbon Resistor	3.3K 1/4 J				01
	R0023	**HF756330**	Carbon Resistor	3.3K 1/4 J				01
	RY001	**VK881200**	Relay	DC G5Z-2A-YA 12V				04
	TR001	**VJ828100**	Transistor	2SA1451A-O/Y O.Y				04
	TR002	**IC1815M0**	Transistor	2SC1815 Y,GR				01
	-004	**IC1815M0**	Transistor	2SC1815 Y,GR				01
		V2403300	Circuit Board	NET1		(XT123B0)		
		- -	Jumper Wire	0.55		(VD04170)		
	C0001	**VS677200**	Electrolytic Cap.-BP	1.50UF 63.0V				01
	C0002	**VS677200**	Electrolytic Cap.-BP	1.50UF 63.0V				01
	CN001	**LB932040**	Base Post Connector	VH 4P TE				01
	CN002	**LB932080**	Base Post Connector	VH 8P TE				01
		V2337300	Circuit Board	PEDAL (SW)		(XR780B0)		07
		- -	Jumper Wire	0.55		(VD04170)		
		- -	GND Wire	L=30		(VZ01760)		
	CN1	**VB390200**	Connector Base Post	PH 6P TE				01
*		**V7134800**	Circuit Board	PNCL		(X0080C0)		
*		**V7134900**	Circuit Board	PNCR		(X0080C0)		
	CN101	**VF283100**	Connector Base Post	PH 13P TE				01
	CN201	**VB390200**	Connector Base Post	PH 6P TE				01
	D0101	**VB493900**	Diode	MA221				01
	-0113	**VB493900**	Diode	MA221				01
	D0201	**VB493900**	Diode	MA221				01
	-0207	**VB493900**	Diode	MA221				01
*	SW101	**V7446600**	Tact Switch	EVQQWS03W		MENU(DEMO)		01
*	SW102	**V7446600**	Tact Switch	EVQQWS03W		MENU(HELP)		01
*	SW103	**V7446600**	Tact Switch	EVQQWS03W		MENU(FUNCTION)		01
*	SW104	**V7446600**	Tact Switch	EVQQWS03W		D. STUDIO(SOUND CREATOR)		01
*	SW105	**V7446600**	Tact Switch	EVQQWS03W		D. STUDIO(DIGITAL REC.)		01
*	SW106	**V7446600**	Tact Switch	EVQQWS03W		D. STUDIO(MIXING CONSOLE)		01
*	SW107	**V7446600**	Tact Switch	EVQQWS03W		LCD select (A)		01
*	SW108	**V7446600**	Tact Switch	EVQQWS03W		LCD select (B)		01
*	SW109	**V7446600**	Tact Switch	EVQQWS03W		LCD select (C)		01
*	SW110	**V7446600**	Tact Switch	EVQQWS03W		LCD select (D)		01
*	SW111	**V7446600**	Tact Switch	EVQQWS03W		LCD select (E)		01
*	SW112	**V7446600**	Tact Switch	EVQQWS03W		BALANCE		01
*	SW113	**V7446600**	Tact Switch	EVQQWS03W		CHANNEL ON/OFF		01
*	SW201	**V7446600**	Tact Switch	EVQQWS03W		BACK		01
*	SW202	**V7446600**	Tact Switch	EVQQWS03W		NEXT		01
*	SW203	**V7446600**	Tact Switch	EVQQWS03W		LCD select (F)		01
*	SW204	**V7446600**	Tact Switch	EVQQWS03W		LCD select (G)		01
*	SW205	**V7446600**	Tact Switch	EVQQWS03W		LCD select (H)		01
*	SW206	**V7446600**	Tact Switch	EVQQWS03W		LCD select (I)		01
*	SW207	**V7446600**	Tact Switch	EVQQWS03W		LCD select (J)		01
*		**V7135200**	Circuit Board	PNR		(XZ882C0)		
	C0001	**US064100**	Ceramic Capacitor-B (chip)	0.0100 50V K				01

*: New Parts

RANK: Japan only

	REF NO.	PART NO.	DESCRIPTION			REMARKS	QTY	RANK
	C0002	**VS490700**	Electrolytic Cap.	47.0 16.0V				01
	C0003	**VS490700**	Electrolytic Cap.	47.0 16.0V				01
	C0004	**US064100**	Ceramic Capacitor-B (chip)	0.0100 50V K				01
	C0005	**US063100**	Ceramic Capacitor-B (chip)	1000P 50V K				01
	C0006	**VS490700**	Electrolytic Cap.	47.0 16.0V				01
	C0007	**US064100**	Ceramic Capacitor-B (chip)	0.0100 50V K				01
	-0009	**US064100**	Ceramic Capacitor-B (chip)	0.0100 50V K				01
	C0010	**VS490700**	Electrolytic Cap.	47.0 16.0V				01
	C0011	**VS490700**	Electrolytic Cap.	47.0 16.0V				01
	CN001	**VB389600**	Connector Base Post	PH 11P SE				01
	CN002	**VB858900**	Connector Base Post	PH 10P SE				01
	CN003	**VB858700**	Connector Base Post	PH 8P SE				01
	CN004	**VC166500**	Connector Base Post	PH 12P SE				01
	CN005	**VB858500**	Connector Base Post	PH 6P SE				01
	CN006	**VK015400**	Connector Base Post	PH 13P SE				01
	D0001	**VB493900**	Diode	MA221				01
	-0038	**VB493900**	Diode	MA221				01
	EC001	**VU481300**	Encoder	REB161 PVB 15F		DATA ENTRY		03
	IC001	**XS711200**	IC	MN101C027YB		CPU		06
	LD001	**VZ460300**	Photo Diode	SELU6814CTP5		VOICE PART ON/OFF(LAYER)		02
	LD002	**VZ460300**	Photo Diode	SELU6814CTP5		VOICE PART ON/OFF(LEFT)		02
*	LD003	**V7767400**	LED Red	SLZ-981B-09-T1		VOICE EFFECT(REVERB)		
*	LD004	**V7767400**	LED Red	SLZ-981B-09-T1		VOICE(PIANO&HARPSI.)		
*	LD005	**V7767400**	LED Red	SLZ-981B-09-T1		VOICE(BRASS)		
*	LD006	**V7767400**	LED Red	SLZ-981B-09-T1		PIANO		
*	LD007	**V7767400**	LED Red	SLZ-981B-09-T1		VOICE EFFECT(DSP)		
*	LD008	**V7767400**	LED Red	SLZ-981B-09-T1		VOICE(E.PIANO)		
*	LD009	**V7767400**	LED Red	SLZ-981B-09-T1		VOICE(WOODWIND)		
*	LD010	**V7767400**	LED Red	SLZ-981B-09-T1		REGIST. MEMORY(FREEZE)		
*	LD011	**V7481600**	LED Green/Red	GL3ED403B0V		REGISTRATION MEMORY(1)		01
*	LD012	**V7767400**	LED Red	SLZ-981B-09-T1		VOICE EFFECT(VARIATION)		
*	LD013	**V7767400**	LED Red	SLZ-981B-09-T1		VOICE(ORGAN&ACCORDION)		
*	LD014	**V7767400**	LED Red	SLZ-981B-09-T1		VOICE(STRINGS)		
*	LD015	**V7481600**	LED Green/Red	GL3ED403B0V		ONE TOUCH SETTING(1)		01
*	LD016	**V7481600**	LED Green/Red	GL3ED403B0V		REGISTRATION MEMORY(2)		01
*	LD017	**V7767400**	LED Red	SLZ-981B-09-T1		VOICE EFFECT(HARMONY/ECHO		
*	LD018	**V7767400**	LED Red	SLZ-981B-09-T1		VOICE(PERCUSSION)		
*	LD019	**V7767400**	LED Red	SLZ-981B-09-T1		VOICE(CHOIR&PAD)		
*	LD020	**V7481600**	LED Green/Red	GL3ED403B0V		ONE TOUCH SETTING(2)		01
*	LD021	**V7481600**	LED Green/Red	GL3ED403B0V		REGISTRATION MEMORY(3)		01
*	LD022	**V7481600**	LED Green/Red	GL3ED403B0V		REGISTRATION MEMORY(4)		01
*	LD023	**V7767400**	LED Red	SLZ-981B-09-T1		VOICE EFFECT(MONO)		
*	LD024	**V7767400**	LED Red	SLZ-981B-09-T1		VOICE(GUITAR)		
*	LD025	**V7767400**	LED Red	SLZ-981B-09-T1		VOICE(SYNTH.)		
*	LD026	**V7481600**	LED Green/Red	GL3ED403B0V		ONE TOUCH SETTING(3)		01
*	LD027	**V7481600**	LED Green/Red	GL3ED403B0V		REGISTRATION MEMORY(5)		01
*	LD028	**V7481600**	LED Green/Red	GL3ED403B0V		REGISTRATION MEMORY(6)		01
*	LD029	**V7767400**	LED Red	SLZ-981B-09-T1		VOICE EFFECT(LEFT HOLD)		
*	LD030	**V7767400**	LED Red	SLZ-981B-09-T1		VOICE(BASS)		
*	LD031	**V7767400**	LED Red	SLZ-981B-09-T1		VOICE(XG)		
*	LD032	**V7481600**	LED Green/Red	GL3ED403B0V		ONE TOUCH SETTING(4)		01
*	LD033	**V7481600**	LED Green/Red	GL3ED403B0V		REGISTRATION MEMORY(7)		01
*	LD034	**V7481600**	LED Green/Red	GL3ED403B0V		REGISTRATION MEMORY(8)		01
*	LD035	**V7767400**	LED Red	SLZ-981B-09-T1		VOICE(USER)		
	R0001	**RD350000**	Carbon Resistor (chip)	0 63M J				01
	R0002	**RD357220**	Carbon Resistor (chip)	22K 63M J				01
	R0003	**RD356100**	Carbon Resistor (chip)	1.0K 63M J				01
	R0004	**RD154820**	Carbon Resistor (chip)	82.0 1/4 J				01
	-0011	**RD154820**	Carbon Resistor (chip)	82.0 1/4 J				01
	R0012	**RD154560**	Carbon Resistor (chip)	56.0 1/4 J				01
	-0019	**RD154560**	Carbon Resistor (chip)	56.0 1/4 J				01
	R0020	**RD154470**	Carbon Resistor (chip)	47.0 1/4 J				01
	-0024	**RD154470**	Carbon Resistor (chip)	47.0 1/4 J				01
	R0025	**RD154560**	Carbon Resistor (chip)	56.0 1/4 J				01
	-0027	**RD154560**	Carbon Resistor (chip)	56.0 1/4 J				01
	R0028	**RD154470**	Carbon Resistor (chip)	47.0 1/4 J				01
	-0031	**RD154470**	Carbon Resistor (chip)	47.0 1/4 J				01
	R0032	**RD154820**	Carbon Resistor (chip)	82.0 1/4 J				01
	-0035	**RD154820**	Carbon Resistor (chip)	82.0 1/4 J				01
	R0036	**RD357100**	Carbon Resistor (chip)	10K 63M J				01

*: New Parts

RANK: Japan only

	REF NO.	PART NO.	DESCRIPTION			REMARKS	QTY	RANK
	-0049	**RD357100**	Carbon Resistor (chip)	10K 63M J				01
*	SW001	**V7446500**	Tact Switch	SKQNADD010		VOICE PART ON/OFF(LAYER)		01
*	SW002	**V7446500**	Tact Switch	SKQNADD010		VOICE PART ON/OFF(LEFT)		01
	SW003	**VV439800**	Tact Switch	SKQNAJ		ENTER		01
	SW004	**VV439800**	Tact Switch	SKQNAJ		VOICE EFFECT(REVERB)		01
	SW005	**VV439800**	Tact Switch	SKQNAJ		VOICE(PIANO&HARPSI.)		01
	SW006	**VV439800**	Tact Switch	SKQNAJ		VOICE(BRASS)		01
	SW007	**VV439800**	Tact Switch	SKQNAJ		MUSIC FINDER		01
	SW008	**VV439800**	Tact Switch	SKQNAJ		PIANO		01
	SW009	**VV439800**	Tact Switch	SKQNAJ		VOICE EFFECT(DSP)		01
	SW010	**VV439800**	Tact Switch	SKQNAJ		VOICE(E.PIANO)		01
	SW011	**VV439800**	Tact Switch	SKQNAJ		VOICE(WOODWIND)		01
	SW012	**VV439800**	Tact Switch	SKQNAJ		REGIST. MEMORY(FREEZE)		01
	SW013	**VV439800**	Tact Switch	SKQNAJ		REGISTRATION MEMORY(1)		01
	SW014	**VV439800**	Tact Switch	SKQNAJ		VOICE EFFECT(VARIATION)		01
	SW015	**VV439800**	Tact Switch	SKQNAJ		VOICE(ORGAN&ACCORDION)		01
	SW016	**VV439800**	Tact Switch	SKQNAJ		VOICE(STRINGS)		01
	SW017	**VV439800**	Tact Switch	SKQNAJ		ONE TOUCH SETTING(1)		01
	SW018	**VV439800**	Tact Switch	SKQNAJ		REGISTRATION MEMORY(2)		01
	SW019	**VV439800**	Tact Switch	SKQNAJ		VOICE EFFECT(HARMONY/ECHO		01
	SW020	**VV439800**	Tact Switch	SKQNAJ		VOICE(PERCUSSION)		01
	SW021	**VV439800**	Tact Switch	SKQNAJ		VOICE(CHOIR&PAD)		01
	SW022	**VV439800**	Tact Switch	SKQNAJ		ONE TOUCH SETTING(2)		01
	SW023	**VV439800**	Tact Switch	SKQNAJ		REGISTRATION MEMORY(3)		01
	SW024	**VV439800**	Tact Switch	SKQNAJ		REGISTRATION MEMORY(4)		01
	SW025	**VV439800**	Tact Switch	SKQNAJ		VOICE EFFECT(MONO)		01
	SW026	**VV439800**	Tact Switch	SKQNAJ		VOICE(GUITAR)		01
	SW027	**VV439800**	Tact Switch	SKQNAJ		VOICE(SYNTH.)		01
	SW028	**VV439800**	Tact Switch	SKQNAJ		ONE TOUCH SETTING(3)		01
	SW029	**VV439800**	Tact Switch	SKQNAJ		REGISTRATION MEMORY(5)		01
	SW030	**VV439800**	Tact Switch	SKQNAJ		REGISTRATION MEMORY(6)		01
	SW031	**VV439800**	Tact Switch	SKQNAJ		VOICE EFFECT(LEFT HOLD)		01
	SW032	**VV439800**	Tact Switch	SKQNAJ		VOICE(BASS)		01
	SW033	**VV439800**	Tact Switch	SKQNAJ		VOICE(XG)		01
	SW034	**VV439800**	Tact Switch	SKQNAJ		ONE TOUCH SETTING(4)		01
	SW035	**VV439800**	Tact Switch	SKQNAJ		REGISTRATION MEMORY(7)		01
	SW036	**VV439800**	Tact Switch	SKQNAJ		REGISTRATION MEMORY(8)		01
	SW037	**VV439800**	Tact Switch	SKQNAJ		VOICE(USER)		01
	SW038	**VV439800**	Tact Switch	SKQNAJ		REGIST. MEMORY(MEMORY)		01
	TA001	**VT943400**	Transistor Array	TD62785F(TP1)				04
	TA002	**VQ248500**	Transistor Array	TD62381F				04
	TA003	**VQ248500**	Transistor Array	TD62381F				04
	TR001	**VY677700**	Digital Transistor	DTB123YK T146				01
	TR002	**VY677700**	Digital Transistor	DTB123YK T146				01
	TR003	**VY677600**	Digital Transistor	DTC123JKA TP				01
	-006	**VY677600**	Digital Transistor	DTC123JKA TP				01
	VR001	**VS368200**	Rotary Variable Resistor	B10.0K RK09K1130BN		LCD CONTRAST		01
	WH001	**- -**	Connector Assembly	ENC DS-4P L=100		(V753020)		
	X0001	**VE222400**	Ceramic Resonator	8 MHz EFO-FC8004A4				03
*		**V7161600**	Circuit Board	SWX		(XZ896D0)		
	C0001	**UF017220**	Electrolytic Cap. (chip)	22 6.3V				01
	C0002	**UF017220**	Electrolytic Cap. (chip)	22 6.3V				01
	C0003	**US064100**	Ceramic Capacitor-B (chip)	0.0100 50V K				01
	-0019	**US064100**	Ceramic Capacitor-B (chip)	0.0100 50V K				01
	CN001	**VU341400**	Straight Connector	HIF3FB-26DA-2.54DS				03
	IC001	**XU947C00**	IC	HG73C205AFD		SWX00B		09
	IC002	**XZ635A00**	IC	IS61C6416-15K		} SRAM 1M		07
	IC002	**XZ965A00**	IC	K6R1016C1C-C15		}		08
*	IC003	**X0042100**	IC			MASK ROM 128M WAVE+PRG.		
	R0002	**RD355100**	Carbon Resistor (chip)	100 63M J				01
	R0003	**RD350000**	Carbon Resistor (chip)	0 63M J				01
	R0004	**RD355100**	Carbon Resistor (chip)	100 63M J				01
	-0037	**RD355100**	Carbon Resistor (chip)	100 63M J				01
	R0038	**RD357100**	Carbon Resistor (chip)	10K 63M J				01
	R0039	**RD357100**	Carbon Resistor (chip)	10K 63M J				01
	R0040	**RD350000**	Carbon Resistor (chip)	0 63M J				01
	-0042	**RD350000**	Carbon Resistor (chip)	0 63M J				01
	R0043	**RD355100**	Carbon Resistor (chip)	100 63M J				01
	R0044	**RD350000**	Carbon Resistor (chip)	0 63M J				01

*: New Parts

RANK: Japan only

	REF NO.	PART NO.	DESCRIPTION			REMARKS	QTY	RANK
	R0045	**RD357100**	Carbon Resistor (chip)	10K 63M J				01
	R0048	**RD357100**	Carbon Resistor (chip)	10K 63M J				01
⚠		**VT015700**	AC Cord Set	J 2P 2.5m 7A		J		05
⚠		**VT015800**	AC Cord Set	U 2P 2.44m 7A		U		06
⚠		**VT015900**	AC Cord Set	E 2P 2.5m		E,N		05
⚠		**VT016000**	AC Cord Set	B 2P 2.5m		B		08
⚠		**XQ429B00**	Power Transformer	GA-60J		J		12
⚠		**XQ430C00**	Power Transformer	29WP243 UL/CSA		U		11
⚠		**XQ431B00**	Power Transformer	GA-60 E IEC65		E,B		12
⚠		**XQ432B00**	Power Transformer	GA-60 N		N		14
		V3331300	LCD	EDMMPU3BCF				23
⚠		**VC843500**	Push Switch	SDDLB1216A J.U.C.S		POWER ON/OFF		03
		V6492300	Floppy Disk Drive	DF354H 3.5"				13
*		**X0203A00**	Speaker	16cm 6 ohm 40W		WOOFER	2	
		XL455A00	Speaker	5.0cm 16 ohm 60W		MONITOR		07

*: New Parts

RANK: Japan only

CVP-203 OVERALL CIRCUIT DIAGRAM 1/3 (DM, SWX, INV)

DM

CPU
HD6417709F80A
IC18
SH3

COMPARATOR
NAND
REGULATOR +3.3V
CLOCK
BUFFER
AND
FDC
IC9
HD63266F
SRAM 256K
LCDC
IC8
SED1335F0B
INVERTER
SDRAM 64M
FLASH ROM 64M MAIN-L
FLASH ROM 64M MAIN-H
not installed
FLASH ROM 8M
MASK ROM 64M PARA/STYLE
DECODER
SIO4
(GATE ARRAY)
IC26
DAC
AK4554-RS
OP AMP
REGULATOR +5V
D-FF
NAND
SWX00B
IC1
DRAM 4M
SRAM 1M
MASK ROM 128M WAVE +PRG.
MASK ROM 128M WAVE

FDD

LCD Back Light
LCD

INV

SWX

28CC1-8820431 ⚠3

28CC1-8819794 ⚠1

28CC1-8820452

not installed

(セ): Ceramic Capacitor

Note : See parts list for details of circuit board component parts.

■CVP-203 OVERALL CIRCUIT DIAGRAM 2/3 (PNL, PNR, ENC, PNCB, PNCL, PNCR, GLL, GLC, GLR, GH-D SW H, GH-DclSW L)

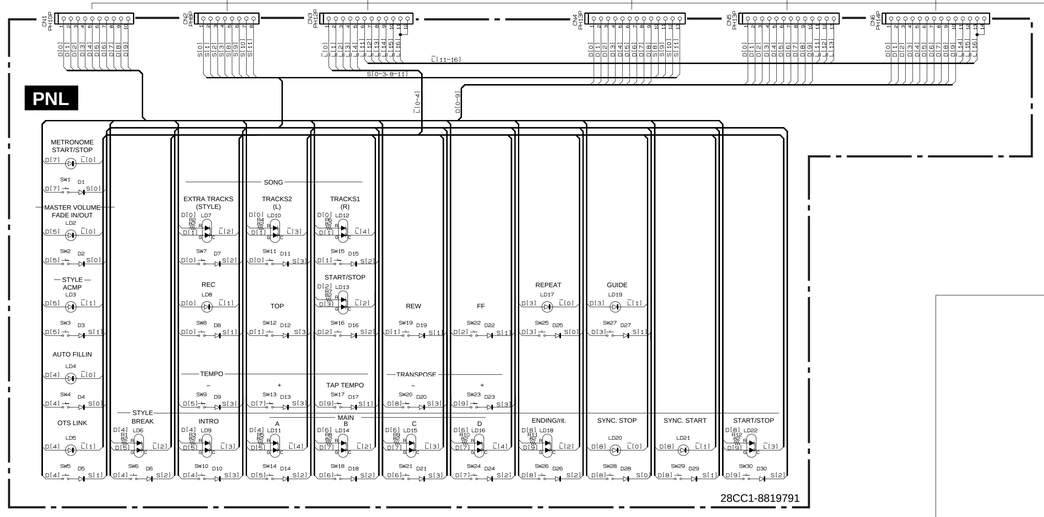

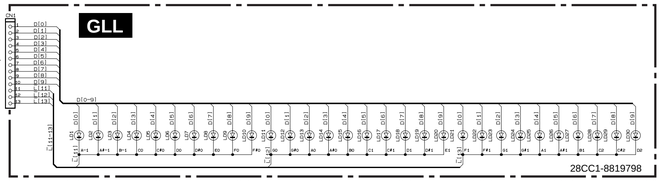

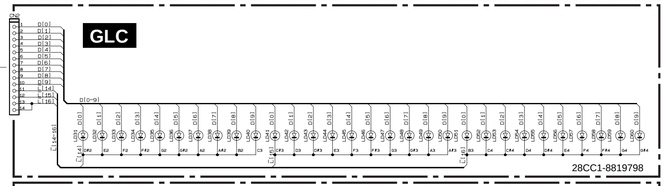

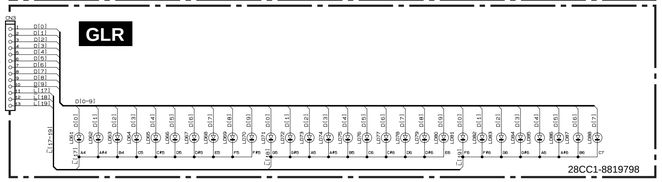

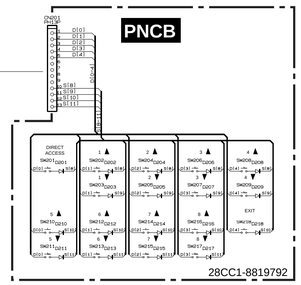

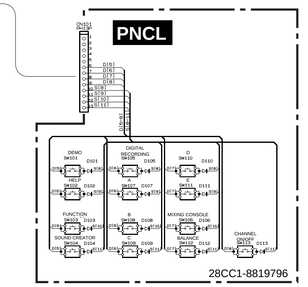

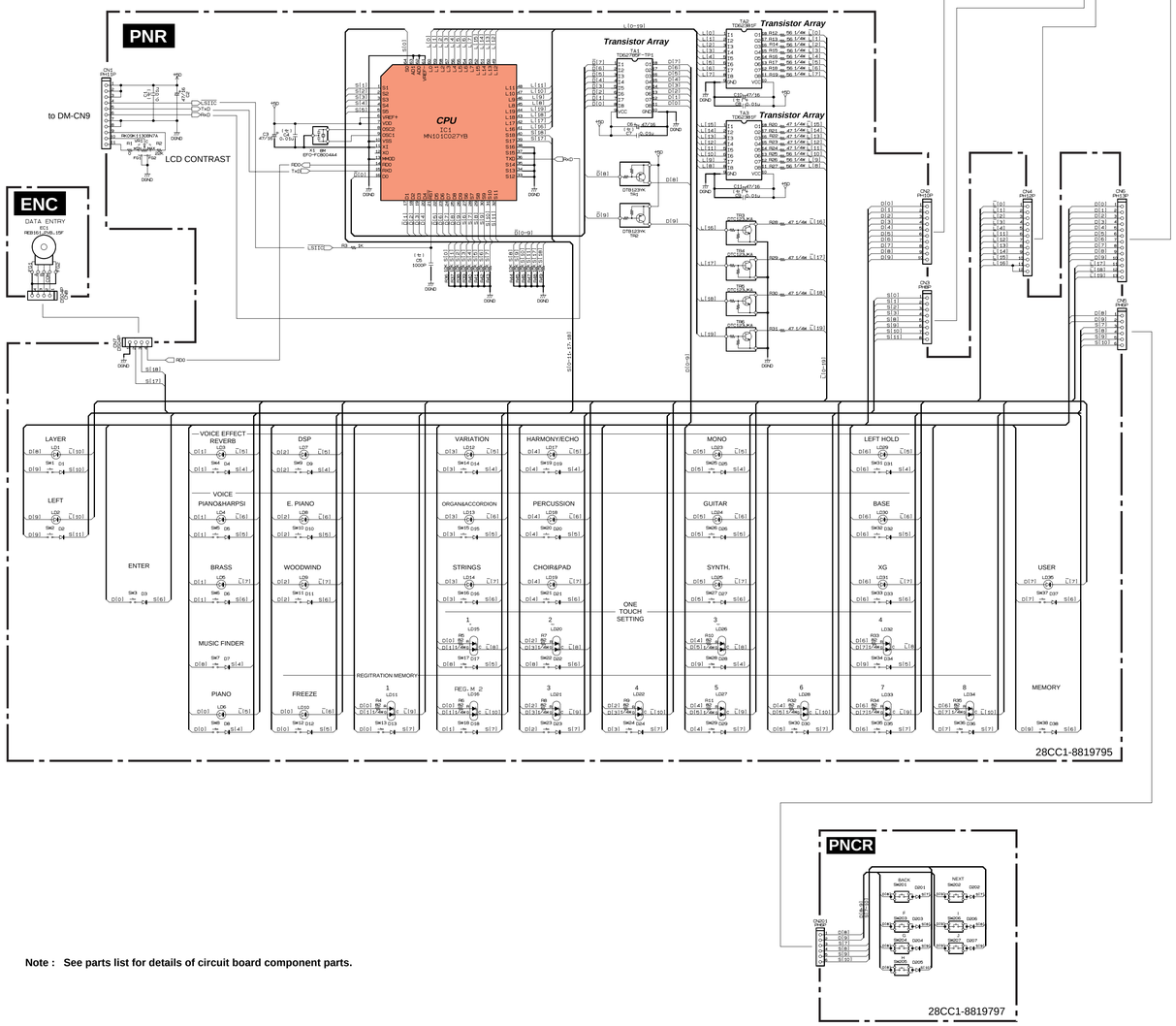

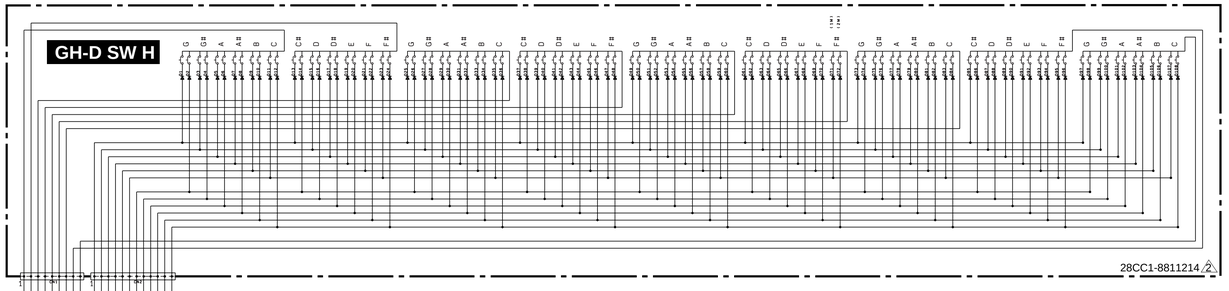

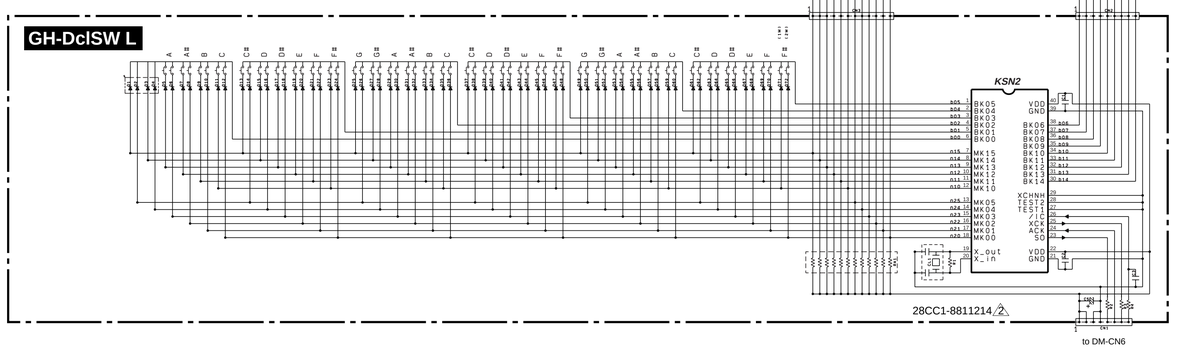

Note : See parts list for details of circuit board component parts.

CVP-203

■ CVP-203 OVERALL CIRCUIT DIAGRAM 3/3 (FU60, MA60, A-JACK, D-JACK, NET1, HP, MV, PEDAL)

FU60

POWER SW TV-5
V-SELX1 VOLTAGE-SELECTOR
AC-INLET1 AC-INLET
AC cord
Japanese model
Power Transformer T1

※1

	Japanese model	U.S.model	European model	General export model
C1	0.01uF	0.01uF/125V	0.01uF/400V	0.01uF/400V
C2, C3	0.0047	0.0047uF/125V	0.0047uF/400V	0.0047uF/400V
J1	○	○	○	×
FU60 F1	3A	3A	T 1.6A L	3A
FU60 F2	×	×	×	T 1.6A L
FU60 F3	×	×	×	T 1.6A L
V - SEL	×	×	×	○

○ Installed × Not Installed

※2

FU60	L1	J
	L2	J
	L3	SU10VD

28CB1-8811315

U	B, E	N
BROWN 120V	BLUE 230V	RED 240V / BLUE 220V / VIOLET 110V / ORANGE 110V
GRAY 0V	GRAY 0V	GRAY 0V
XQ430, XR749	XQ431, XR750	XQ432, XR751

J:(GA60・XQ429, XR748)

■ **WARNING**
Components having special characteristics are marked ⚠ and must be replaced with parts having specifications equel to those originally installed.

MA60

※1

	J, U	E, N
F1, F2, F3	5A	T 5A L

REGULATOR +5V
REGULATOR +5V
POWER AMP.
REGULATOR +12V 0.5A
REGULATOR -12V
to FDD
to DM-CN3
to DM-CN4
to DM-CN5
to DM-CN12
to DM CN5
AUX PEDAL
: not installed
28CB1-8811075 ⚠2

MV

MASTER VOLUME
28CC1-8819793

NET1

WOOFERS
TWEETERS
2NA-VY64290 ⚠3

HP

PHONES
N.C.
28CC1-8811547
Keybed

PEDAL

A-JACK

AUX IN
L / L+R
R
to DM-CN12
AUX OUT
LEVEL FIXED
EQUALIZER
OP AMP
not installed
28CC1-8819748 ⚠1

PEDAL (D-JACK 2/2)

to DM-CN4
PEDAL

D-JACK (D-JACK 1/2)

PHOTO COUPLER
HOST SELECT
IN
OUT
THRU
MIDI
Host I/F
TO HOST
AUX PEDAL
INVERTER
LINE TRANSCEIVER
28CC1-8815738 ⚠4

Note : See parts list for details of circuit board component parts

(セ): Ceramic Capacitor
(マ): Mylar Capacitor

• µPC2933T-E1 (XS516A00) REGULATOR +3.3V 1: V in 2: GND 3: V out	•NJM78L05UA(XJ598A00) REGULATOR +5V 1: OUTPUT 2: COMMON 3: INPUT	• SI-3051N(XQ437A00) REGULATOR +5V 1: GND 2: OUTPUT 3: INPUT	•M5237L(XQ667A00) REGULATOR +5V 1: INPUT 2: GND 3: VOLTAGE adj.	•NJM78M12FA(XJ602A00) REGULATOR +12V 1: OUTPUT 2: COMMON 3: INPUT	•NJM79M12FA(XD343A00) REGULATOR -12V 1: OUTPUT 2: INPUT 3: COMMON	•D5SBA20 (VK421800) DIODE STACK 6.0A 200V	•D3SBA20-4103 (VQ111500) DIODE STACK 4.0A	•11ES4 (VB481900) DIODE 1: ANODE 2: CATHODE

■ CVP-203 BLOCK DIAGRAM

MV (M-VOL, VR301, CN301 8P) → to A-JACK - CN510
PNL (SW, LED, CN1-3, CN4, CN5 13P, CN6 14P)
PNCL (SW, LED, CN201 9P)
PNCB (SW, LED, CN101 13P)
PNCR (SW, LED, CN201 6P)
PNR (PANEL CPU MN101C027 IC1 64P, DRIVER TR1 - 3, ENC EC1, CN7, CN8, CN24, CN1 11P, CN5 6P, CN6 13P, VR1 CONTLAST VR, CN1 11P)
to DM-CN9
to DM-CN7
LCD BACK LIGHT
LCD (YAMAHA Clavinova)
INV (INVERTER, CN402 4P, CN401 4P)
BRIGHTNESS CONT from DM-CN2
GLL (KBD LED, CN1 13P)
GLC (KBD LED, CN2 14P)
GLR (KBD LED, CN3 13P)

DM
to MA60 -CN4
to D-JACK - CN2
DH-D SW H
DH-DcISW L
GH Key Board KSN2 CN1
MAIN CPU SH7709 SH-3 IC18 208P
ROM PROG 64M IC24 56P
ROM PARA /STYL 64M IC29 56P
SDRAM 64M IC22 86P
DEC IC21 16P
FLASH ROM 8M IC33 48P
FDC HD63266 IC9 64P
16MHz
DISK CONTROL
FDD
GNDF
to M60-CN3
to to INV-CN401
LCD_BR2
to LCD
SIO-4 IC26 48P
8MHz
TG SWX00 IC36 168P
ROM WAVE 128M IC38 48P
DRAM 4M IC35 44P
LCDC IC8 60P
SRAM 256k IC3 28P
BUFF IC1 20P
IC4 CLOCK
IC39 CLOCK
D-FF IC43 20P
DAC PD1854 IC27 28P
AMP
IC31
IC15, 17, 20
IC12, IC16
8.4672MH
to PNR-CN1
to D-JACK - CN1
to A-JACK
IC34 +5 REG
+3.3 REG
to A-JACK - CN500
Swx Board Slot
toSWX-CN1

SWX
Swx Board Slot
to DM-CN10
TG SWX00 IC1 168P
SRAM 1M IC2 44P
ROM PROG /WAVE 128M IC3 56P

to DM-CN4
to D-JACK - JK5
PEDAL
PEDAL UNIT

to DM-CN12
to MV-CN301
A-JACK (CN500, CN510, IC100, IC200, RY200, RY640, EQ, MUTE, MUTEC, CN530P 7P, CN520 9P)
HP (CN1, HP1, HP2, PHONES)
JK600 AUX IN L R
JK610
JK640 VIDEO OUT
AUX OUT(PRE)
JK620 AUX OUT(POST) L R
JK630
FU60L (POWER SW, AC-IN, CN1 3P, CN2 3P)
TRNS
MA60 (IC3 +12 REG, IC4 -12 REG, IC1 +5FDD, IC5 +5 REG, CN6 9P, RY1, POWER AMP, MUTEC, TR2 - 4 MUTING CIRCUIT, CN3, 4, 6)
NW (CN2, CN1 4P, CN5 8P, WOOFERS, MONITORS)

D-JACK
PC/MAC
MIDIN
MIDIOUT
SELECTER
1D
1R
IC2 16P TRANSCEIVER
IC1
1MCLK
MIDI CIR
to DM-CN5
JK1 IN
JK2 OUT
JK3 THRU
JK4 To HOST
JK6 AUX PEDAL
MIDI

28CA1-8819816

CVP-203