Clavinova®

CVP-105

SERVICE MANUAL



CONTENTS

SPECIFICATIONS 3
CIRCUIT BOARD LAYOUT 4
PANEL LAYOUT 6
BLOCK DIAGRAM 7
DISASSEMBLY PROCEDURE 8
LSI PIN DESCRIPTION 13
IC BLOCK DIAGRAM 18
CIRCUIT BOARDS 19
TEST PROGRAM 25
INSPECTIONS 27
FACTORY SETTINGS 27
MESSAGES 28
MIDI IMPLEMENTATION CHART 34
MIDI DATA FORMAT 36
PARTS LIST
OVERALL CIRCUIT DIAGRAM

CL 001619

YAMAHA
HAMAMATSU, JAPAN
1.35K-0121 Printed in Japan '99.05

IMPORTANT NOTICE

This manual has been provided for the use of authorized Yamaha Retailers and their service personnel. It has been assumed that basic service procedures inherent to the industry, and more specifically Yamaha Products, are already known and understood by the users, and have therefore not been restated.

WARNING: Failure to follow appropriate service and safety procedures when servicing this product may result in personal injury, destruction of expensive components and failure of the product to perform as specified. For these reasons, we advise all Yamaha product owners that all service required should be performed by an authorized Yamaha Retailer or the appointed service representative.

IMPORTANT: This presentation or sale of this manual to any individual or firm does not constitute authorization, certification, recognition of any applicable technical capabilities, or establish a principal-agent relationship of any form.

The data provided is belived to be accurate and applicable to the unit(s) indicated on the cover. The research engineering, and service departments of Yamaha are continually striving to improve Yamaha products. Modifications are, therefore, inevitable and changes in specification are subject to change without notice or obligation to retrofit. Should any discrepancy appear to exist, please contact the distributor's Service Division.

WARNING: Static discharges can destroy expensive components. Discharge any static electricity your body may have accumulated by grounding yourself to the ground buss in the unit (heavy gauge black wires connect to this buss.)

IMPORTANT: Turn the unit OFF during disassembly and parts replacement. Recheck all work before you apply power to the unit.

WARNING: CHEMICAL CONTENT NOTICE!

The solder used in the production of this product contains LEAD. In addition, other electrical/electronic and/or plastic (where applicable) components may also contain traces of chemicals found by the California Health and Welfare Agency (and possibly other entities) to cause cancer and/or birth defects or other reproductive harm.

DO NOT PLACE SOLDER, ELECTRICAL/ELECTRONIC OR PLASTIC COMPONENTS IN YOUR MOUTH FOR ANY REASON WHAT SO EVER!

Avoid prolonged, unprotected contact between solder and your skin! When soldering, do not inhale solder fumes or expose eyes to solder/flux vapor!

If you come in contact with solder or components located inside the enclosure of this product, wash your hands before handling food.

■ WARNING

Components having special characteristics are marked ⚠ and must be replaced with parts having specification equal to those originally installed.

■ SPECIFICATIONS

KEYBOARD		88 keys (A–1 — C7)
TONE GENERATOR		AWM (Advanced Wave Memory)
MAXIMUM SIMULTANEOUS POLYPHONY		64
VOICES		**Clavinova voices:** 195 **XG voices:** 480 **Drum Kits:** 12 sets **Voice Groups:** Piano, Electric Piano, Guitar, Synthesizer, Organ, Strings/Choir, Brass, Sax/Flute, Bass, Percussion, Ensemble, XG Dual, Split
EFFECTS		**Reverb:** 13 types **Chorus:** 10 types **Effect:** 46 types
ACCOMPANIMENT STYLES		**Rhythm Styles:** 135 **Pianist Styles:** 35 **Custom Styles:** 12 **Style Groups:** 8Beat, 16Beat, Ballad, Dance, Rock/R&B, Swing/Jazz, Latin, Country, Ballroom, Trad/Waltz, Pianist, Disk/Custom **Controls:** Intro, Main A, Main B ,Main C, Main D, Auto-fill, Ending, Fade in/out, Synchro, Start/Stop, Tap, Metronome, Tempo –/+
AUTO ACCOMPANIMENT		Single Finger, Multi Finger, Fingered1, Fingered2, Full Keyboard Music Database, Acmp Assist , Harmony, One Touch Setting, Chord Assist, Synchro Stop, Individual Part Volume Control (Mixer)
REGISTRATION		Bank A – E x 4 memory locations (20), Freeze, Registration Name
SONG PLAY MODE		Song Playback, Repeat, Volume control of individual Parts (Mixer) **Controls:** Song, Play/Stop, Rewind, Fast forward, Pause **Guide Control:** Easy Play, Next Note, Sound Repeat Lyric Display, Piano Roll Display, Keyboard Guide Lamps
SONG RECORD MODE		Quick Recording, Track Recording, Chord Sequence, Step Edit, Song Name, Track Edit, Initial Edit, Setup Memory
LCD/CONTROLS		320 x 240 dot liquid crystal display, Contrast dial, Beat lamp, Function button, Mixer button, Page ◄► buttons, Direct Access button, LCD buttons, data dial, –/+ buttons, Exit button
VOLUME CONTROLS		Master volume, Acmp/Song volume
DEMO/HELP		50 Demo Songs; 5 help languages (English, Japanese, German, French, Spanish)
DISK DRIVE		3.5-inch micro floppy disk drive
PEDAL CONTROLS	RIGHT	Damper
	CENTER	Sostenuto
	LEFT	Soft, Start/Stop, Harmony, Registration, Registration Freeze, Ending/rit, Break, Break Fill, Bass Hold, Fade In/Out, Effect Variation, Glide
JACKS AND TERMINALS		PHONES jacks x 2, AUX OUT jacks (L/L+R, R), AUX IN jacks (L/L+R, R), TO HOST terminal, MIDI terminals (IN, OUT, THRU)
INPUT/OUTPUT SPECIFICATIONS		**AUX OUT:** Output Impedance: 600 Ω **AUX IN:** Input Impedance: 10 kΩ; Input Sensitivity: –10 dBm
MAIN AMPLIFIERS		80 W (40 W x 2)
SPEAKERS		16 cm x 2, 5 cm x 2
DIMENSIONS (W x D x H)	Music stand down	1402 mm x 609 mm x 888 mm (55-3/16" x 24" x 35")
	Music stand up	1402 mm x 609 mm x 1049 mm (55-3/16" x 24" x 41-5/16")
WEIGHT		64.1 kg (141 lbs., 5 oz.)
Output Level		Refer to TEST PROGRAM section of this manual.

■ CIRCUIT BOARD LAYOUT

Location	Part List Ref. No.	Connector Assembly	Destination		Remarks
(60)	MAIN UNIT [14]	MIC-LF	MIC-CN1	JACK-CN4	2P-700 J MODEL ONLY
(61)	MAIN UNIT SUB [61]	KRD-KRD (HP)	HP-CN1	JACK-CN7	7P-650L
(62)	MAIN UNIT SUB [62]	HP (Ground wire)	HP-CN3	KEY BED	2P-150
(63)	MAIN UNIT SUB [63]	MK-LF	Keyboard	DM-CN330	8P-750
(64)	MAIN UNIT [15]	KRD-KRD (Digital power supply)	DM-CN350	MA60-CN4	7P-500L
(65)	MAIN UNIT SUB [65]	KRD-KRD (Analog power supply)	JACK-CN6	MA60-CN6	9P-200L
(66)	MAIN UNIT SUB [66]	SP	NET1-CN002	KEY BED	6P-200
(67)	MAIN UNIT SUB [67]	FDD-SIG	DM-CN750	FDD	34P-900
(68)	MAIN UNIT SUB [68]	FDD (power supply)	MA60-CN3	FDD	3P-480
(69)	MAIN UNIT SUB [69]	KRD-KRD (PL)	HP-CN2	PL-CN1	2P-300L
(71)	MAIN UNIT SUB [71]	PU (Network)	NET1-CN001	MA60-CN5	4P-150
(A)	CONTROL PANEL [350]	PN-LF	DM-CN450	PNL-CN001	14P-450
(B)	CONTROL PANEL [360]	VOL	JACK-CN3	MV-CN301	8P-550
(C)	CONTROL PANEL [370]	MON-SP	NET1-CN003	MON-L/R	5P-750/930
(D)	LCD [40]	LCD-FL	DM-CN670	LCD	
(E)	LCD [60]	Back light	DM-CN370	LCD	2P-380 (U/C 500)
(F)	END BLOCK [50]	Power-SW	FU60-CN1	POW.SW	3P-640
(G)	CONTROL PANEL [320]	KRD-KRD	PNL-CN004	PNR-CN002	10P-500
(H)	CONTROL PANEL [310]	KRD-KRD	PNL-CN003	PNR-CN001	16P-400
(I)	CONTROL PANEL [330]	KRD-KRD	PNR-CN003	PNGR-CN201	12P-200
(J)	CONTROL PANEL [330]	KRD-KRD	PNL-CN005	PNGL-CN101	12P-200
(K)	CONTROL PANEL [340]	KRD-KRD	PNL-CN006	MV-CN302	3P-150

Note1 : LUG Terminals (L-1,2,3,4,5) are used for UL/CSA destination only.

Note2 : FDD-SIG wire harness is installed with its connector guide looks down.

Note3 : The meaning of symbols.

: VD94780 Ferrite Core

: CB81750 Cabel Holder

: LUG Terminal

: VU89130 Cord Binder (Vinyl Tie)

: VP83460 Filament Tape

: Connector Direction

: Connector Direction

● Main Unit

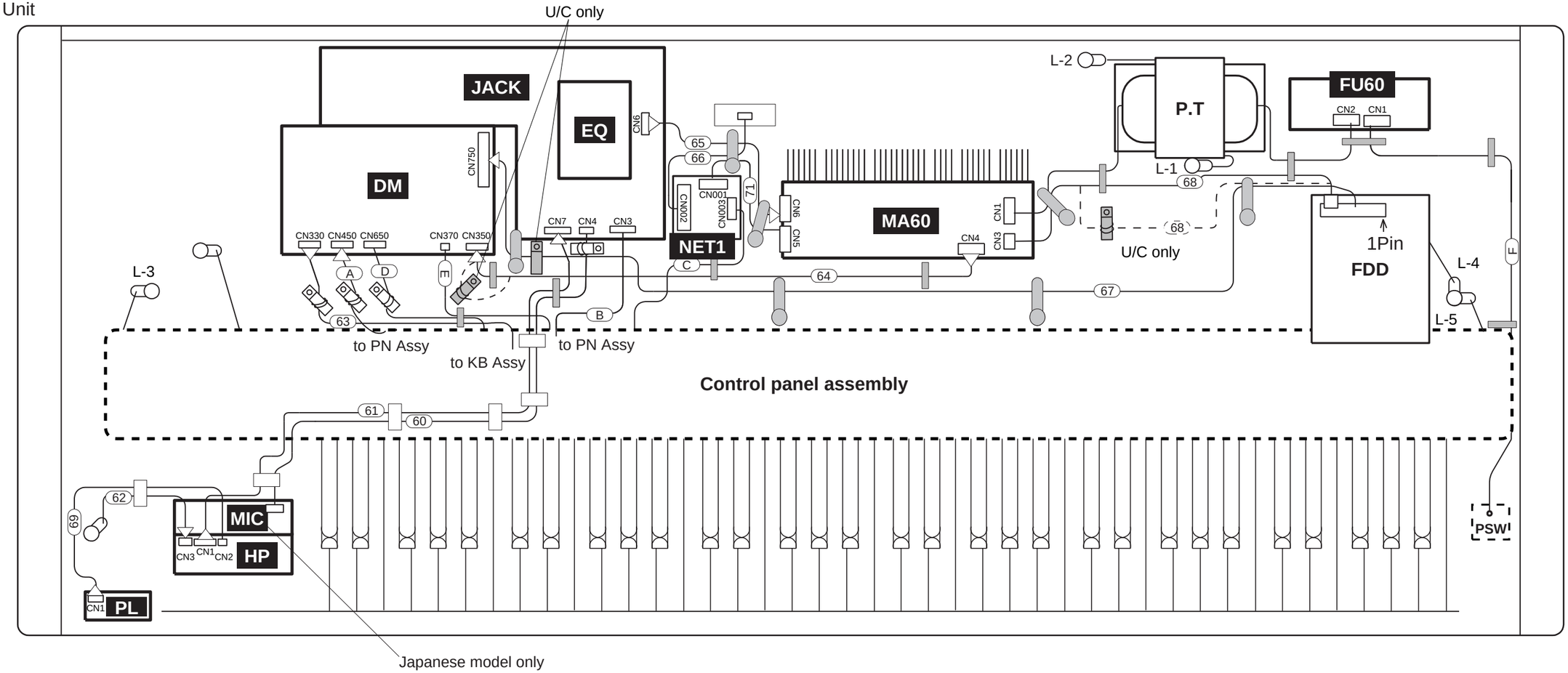

● Control Panel Assembly

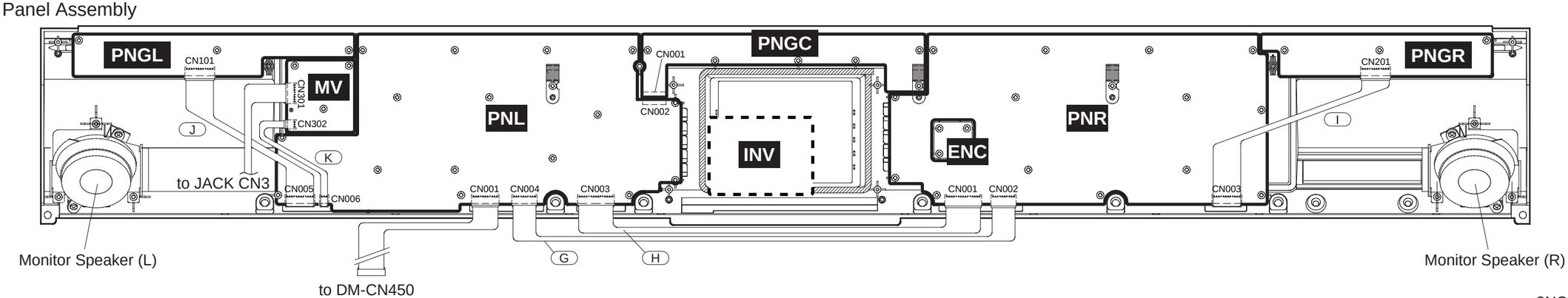

2NC-V334390⚠

■ PANEL LAYOUT

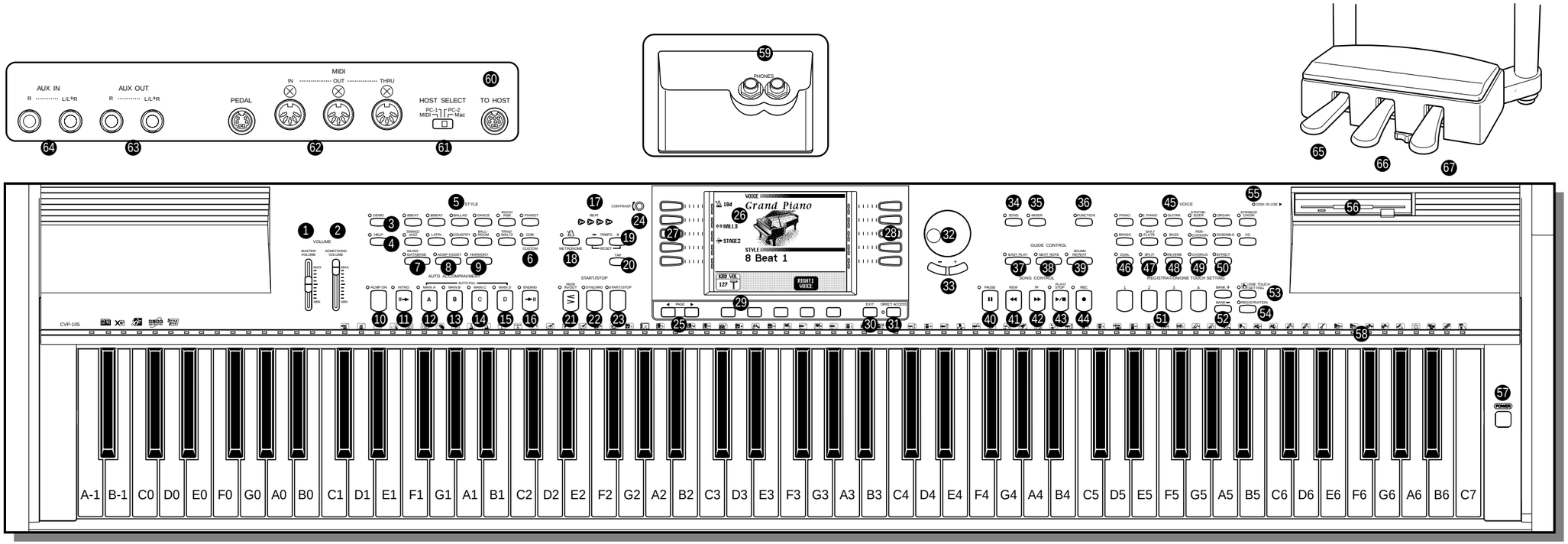

Volume Section
1. [MASTER VOLUME] knob
2. [ACMP/SONG VOLUME] knob

Special Mode Control Section
3. [DEMO] button
4. [HELP] button

Accompaniment Style Section
5. STYLE buttons
6. [DISK/CUSTOM] button
7. [MUSIC DATABASE] button
8. [ACMP ASSIST] button
9. [HARMONY] button

Auto Accompaniment Section
10. [ACMP ON] button
11. [INTRO] button
12. [MAIN A] button
13. [MAIN B] button
14. [MAIN C] button
15. [MAIN D] button
16. [ENDING] button

Metronome Section
17. [BEAT] button
18. [METRONOME] button
19. TEMPO [–], [+] buttons
20. [TAP] button

Start/Stop Section
21. [FADE IN/OUT] button
22. [SYNCHRO] button
23. [START/STOP] button

Display Control Section
24. [CONTRAST] knob
25. PAGE [◀], [▶] buttons
26. LCD display
27. Left LCD buttons
28. Right LCD buttons
29. LCD buttons
30. [EXIT] button
31. [DIRECT ACCESS] button
32. Data dial knob
33. [–], [+] buttons

Main Mode Control Section
34. [SONG] button
35. [MIXER] button
36. [FUNCTION] button

Guide Control Section
37. [EASY PLAY] button
38. [NEXT NOTE] button
39. [SOUND REPEAT] button

Song Control Section
40. [PAUSE] button
41. [REW] button
42. [FF] button
43. [PLAY/STOP] button
44. [REC] button

Voice Section
45. VOICE buttons
46. [DUAL] button
47. [SPLIT] button
48. [REVERB] button
49. [CHORUS] button
50. [EFFECT] button

Registration/One Touch Setting Section
51. [1] through [4] buttons
52. BANK [–] [+] buttons
53. [ONE TOUCH SETTING] button
54. [REGISTRATION] button
55. [DISK IN USE] lamp
56. Floppy disk drive (3.5”)
57. [POWER] switch
58. Keyboard guide lamps

Microphone and Headphone Connectors
59. [PHONES] jacks

Connectors
60. [TO HOST] terminal
61. [HOST SELECT] switch
62. MIDI [IN], [OUT], [THRU] terminal
63. AUX OUT [L/L+R], [R] jacks
64. AUX IN [L/L+R], [R] jacks

Pedals
65. Soft pedal
66. Sostenuto pedal
67. Damper pedal

■ BLOCK DIAGRAM

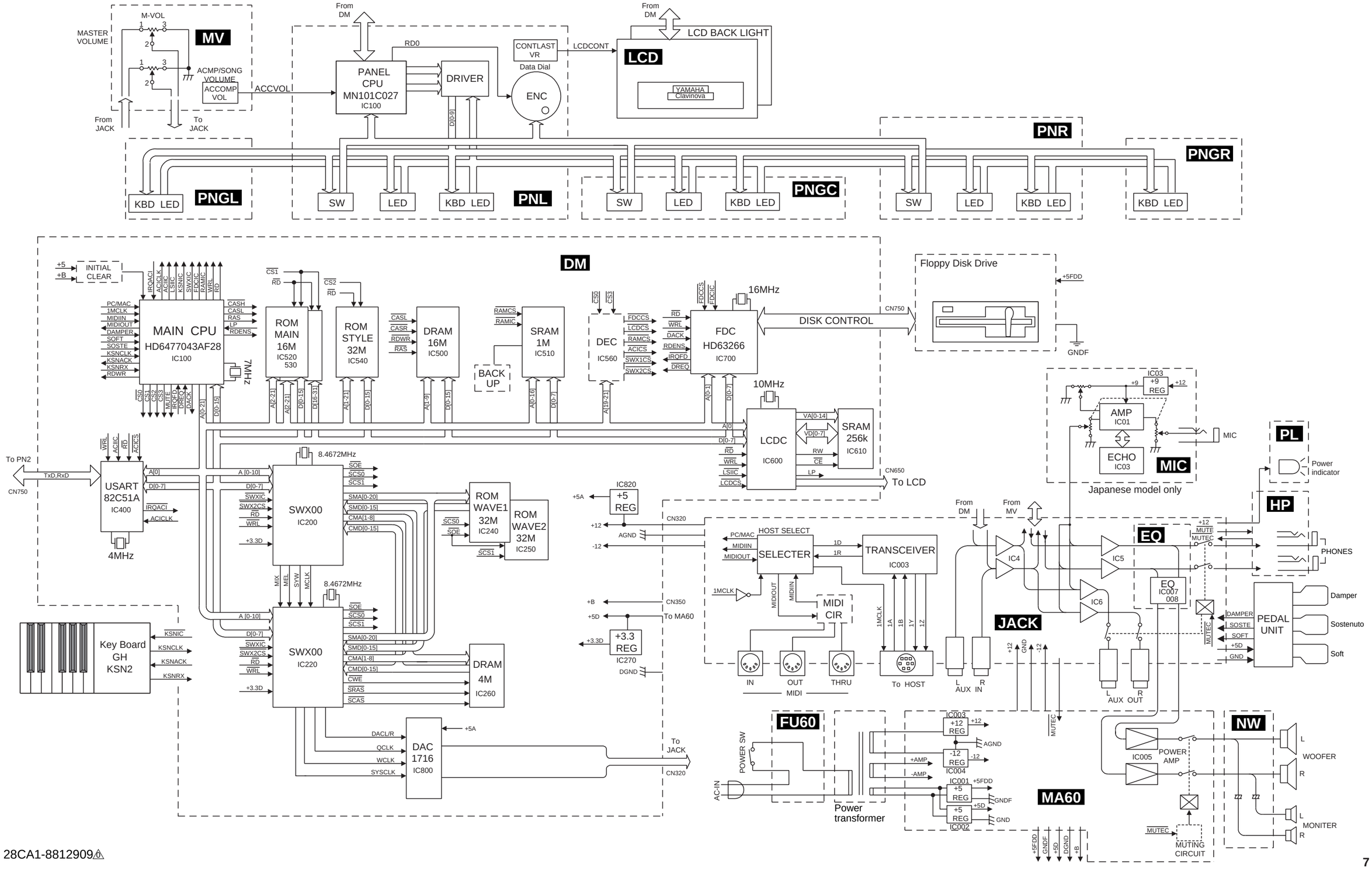

■ DISASSEMBLY PROCEDURE

1 Top Board Assembly

1-1 Disconnect the PK cable. (Fig. 2)
1-2 Disconnect the AC cord.
1-3 Remove the three (3) screws marked [50]. The top board can then be removed by sliding and lifting up. (Fig. 1)

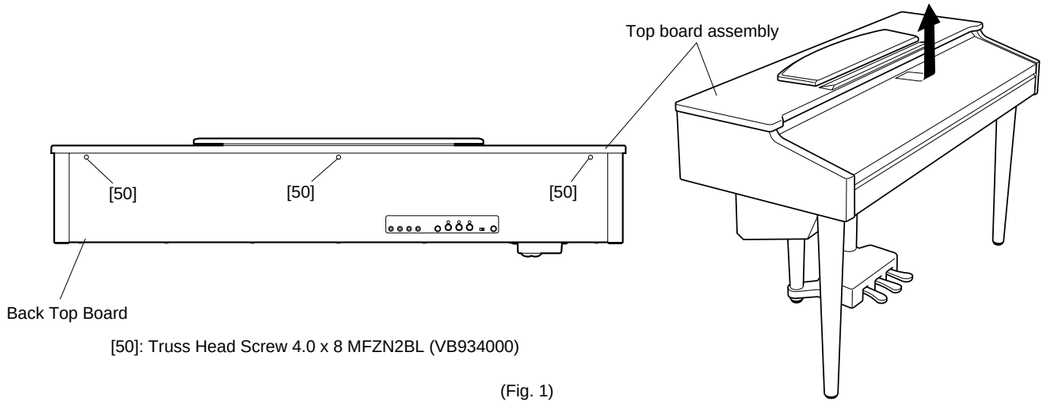

[50]: Truss Head Screw 4.0 x 8 MFZN2BL (VB934000)

(Fig. 1)

2 Circuit Boards and Units on the Keybed

Remove the following screws, each circuit board and unit can then be removed. (Fig. 2, 3)

Circuit Board and Unit	Ref. No.	Screw		QTY
DM	[56A]	Bind Head Tapping Screw-B 3.0 x 8 MFZN2BL	(EP600190)	6
EQ	[A]	Support, PCB	(VT967700)	3
JACK *1	[56B]	Bind Head Tapping Screw-B 3.0 x 8 MFZN2BL	(EP600190)	7
	[56C]	Bind Head Tapping Screw-B 3.0 x 8 MFZN2BL	(EP600190)	3
NW	[59]	Bind Head Tapping Screw-1 3.0 x 20 MFZN2Y	(EP030340)	4
FU 60 Ass'y	[12A]	Bind Head Tapping Screw-1 3.0 x 8 MFZN2Y	(EP600280)	2
Power Trans.	[12B]	Bind Head Tapping Screw-1 3.5 x 12 MFZN2BL	(EP030340)	4
MA60 Ass'y	[58]	Bind Head Tapping Screw-B 3.5 x 12 MFZN2BL	(EP030340)	2

*1 Before removing the JACK circuit board, removed the EQ circuit board and the PK cable.

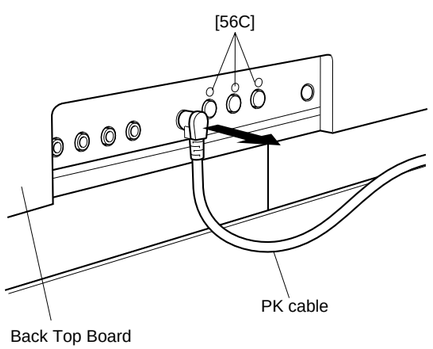

(Fig. 2)

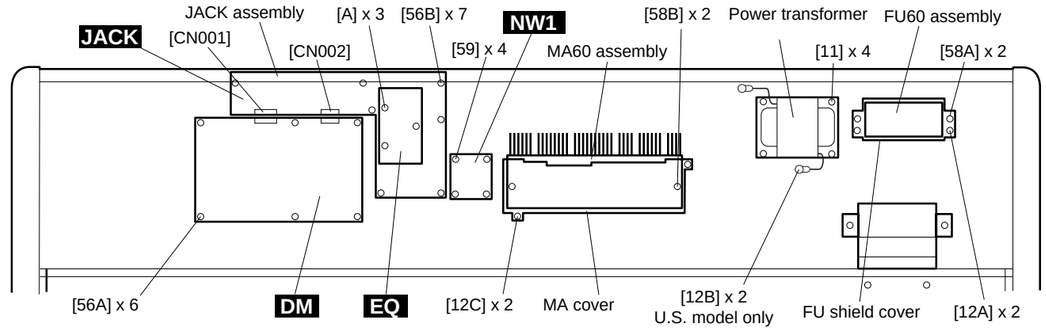

(Fig. 3)

3 Key Cover Assembly

3-1 Remove the top board assembly. (See Procedure 1.)
3-2 Remove the screw marked [56]. The rack cover can then be removed. (Fig. 4)
3-3 Set either end of the rod at the openings guide and then lift the key cover assembly. (Fig. 4)

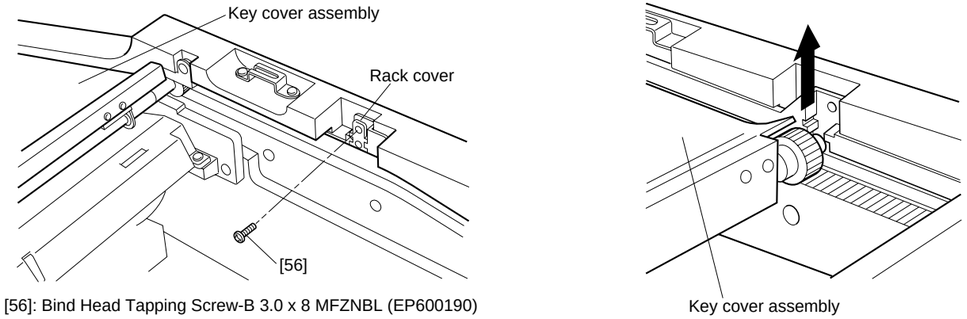

[56]: Bind Head Tapping Screw-B 3.0 x 8 MFZNBL (EP600190)

(Fig. 4)

4 FDD Assembly

4-1 Remove the top board assembly. (See Procedure 1.)
4-2 Remove the key cover assembly. (See Procedure 3.)
4-3 Remove the screws marked [50B] and [52], there are two of each. The FDD assembly can then be removed. (Fig. 5)
4-4 Remove the four (4) screws marked [40]. The floppy disk drive unit can then be removed. (Fig. 5)

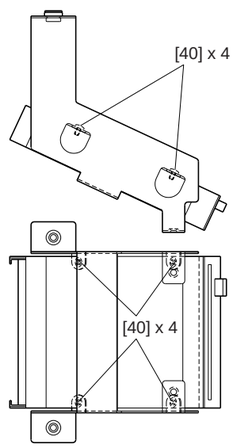

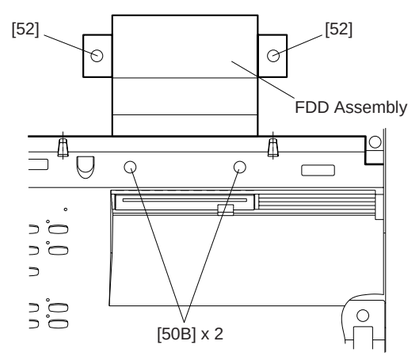

[40]: Bind Head Screw 3.0 x 5 MFZN2Y (EG330150)
[50]: Bind Head Screw-1 4.0 x 10 MFZNBL (VA221600)
[52]: PW Head Tapping Screw-1 3.5 x 18-10 MFZN2Y (VZ057000)

(Fig. 5)

5 Control Panel Assembly

5-1 Remove the top board assembly. (See Procedure 1.)

5-2 Remove the key cover assembly. (See Procedure 3.)

5-3 Remove the FDD assembly. (See Procedure 4.)

5-4 Remove the six (6) screws marked [53A]. The control panel assembly can then be removed. (Fig. 6)

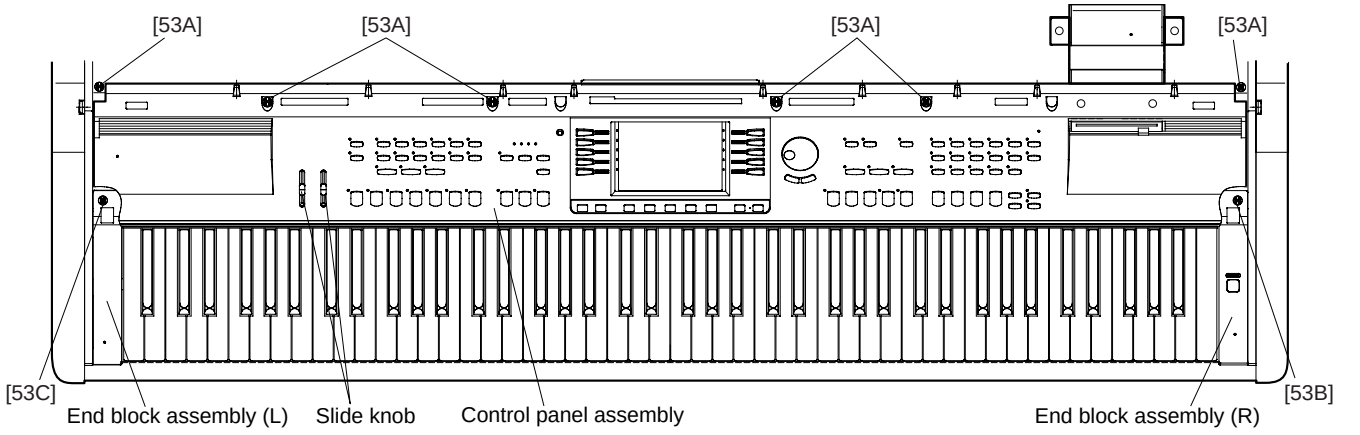

[53]: Bind Head Screw-B 4.0 x 10 MFZN2BL (EP600240)

(Fig. 6)

6 Circuit Boards and Units on the Panel Assembly

Remove the following screws, each circuit board and unit can then be removed. (Fig. 6, 7)

Circuit Board and Unit	Ref. No.	Screw		QTY
PNL	460A	Bind Head Tapping Screw-B 3.0 x 8 MFZN2Y	(EP600250)	18
PNR	460B	Bind Head Tapping Screw-B 3.0 x 8 MFZN2Y	(EP600250)	15
PNGL	460C	Bind Head Tapping Screw-B 3.0 x 8 MFZN2Y	(EP600250)	3
PNGC	460D	Bind Head Tapping Screw-B 3.0 x 8 MFZN2Y	(EP600250)	6
PNGR	460E	Bind Head Tapping Screw-B 3.0 x 8 MFZN2Y	(EP600250)	3
MV	Slide knob			2
	460F	Bind Head Tapping Screw-B 3.0 x 8 MFZN2Y	(EP600250)	3
ENC	460G	Bind Head Tapping Screw-B 3.0 x 8 MFZN2Y	(EP600250)	3
Monitor speaker (R)	460H	Bind Head Tapping Screw-B 3.0 x 8 MFZN2Y	(EP600250)	3
Monitor speaker (L)	460I	Bind Head Tapping Screw-B 3.0 x 8 MFZN2Y	(EP600250)	3
INV	30A	Bind Head Tapping Screw-B 3.0 x 8 MFZN2Y	(EP600250)	4
Inverter cover (For US model)	30B	Bind Head Tapping Screw-B 3.0 x 8 MFZN2Y	(EP600250)	2
	500	Bind Head Tapping Screw-B 3.0 x 10 MFZNBL	(EP600140)	1
	130	Bind Head Tapping Screw-B 3.0 x 10 MFZNBL	(EP600140)	1
LCD assembly	460J	Bind Head Tapping Screw-B 3.0 x 8 MFZN2Y	(EP600250)	4

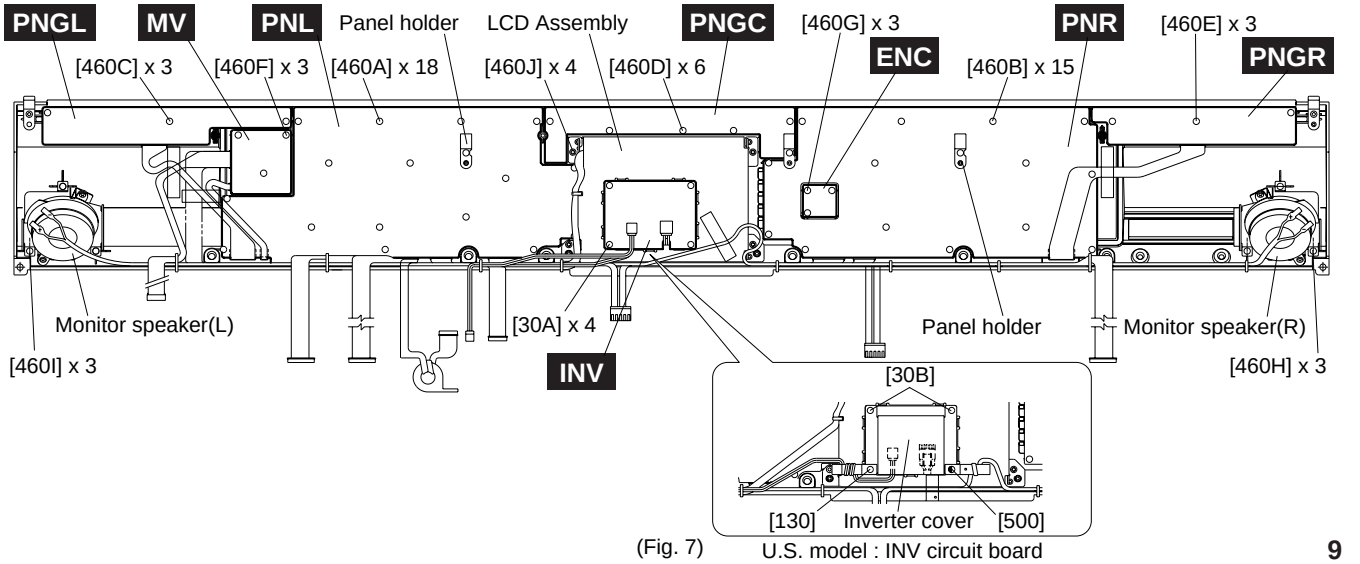

(Fig. 7) U.S. model : INV circuit board

7 Power Switch Assembly

7-1 Remove the top board assembly. (See Procedure 1.)
7-2 Remove the key cover assembly. (See Procedure 3.)
7-3 Remove the control panel assembly. (See Procedure 5.)
7-4 Remove the screw marked [53B]. The right end block can then be removed. (Fig. 6)
7-5 Remove the two (2) screws marked [30C]. The power switch can then be removed. (Fig. 8)

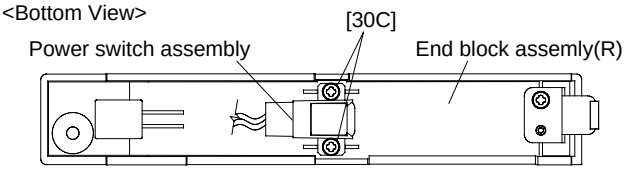

[30]: Bind Head Tapping Screw-B 3.0 x 8 MFZN2BL (EP600190)

(Fig. 8)

8 Keyboard Assembly

8-1 Remove the top board assembly. (See Procedure 1.)
8-2 Remove the key cover assembly. (See Procedure 3.)
8-3 Remove the control panel assembly. (See Procedure 5.)
8-4 Remove the right end block. (See Procedure 7-4.)
8-5 Remove the screw marked [53C]. The left end block can then be removed. (Fig. 6)
8-6 Remove the eight (8) screws marked [52]. The control panel holders can then be removed. (Fig. 9)
8-7 Remove the two (2) screws marked [74], the nine (9) screws marked [73]. The keyboard assembly can then be removed. (Fig. 9)

* When you take the keyboard unit out of the main unit, slide it backward and hold the middle of it. Lift the keyboard unit from the front and take it out of the main unit as shown in the figures. (Fig. 10 and Fig. 11)
* Do not hold both ends of the keyboard.
* When mounting the keyboard assembly, tighten screws in this order: [74] and [73].

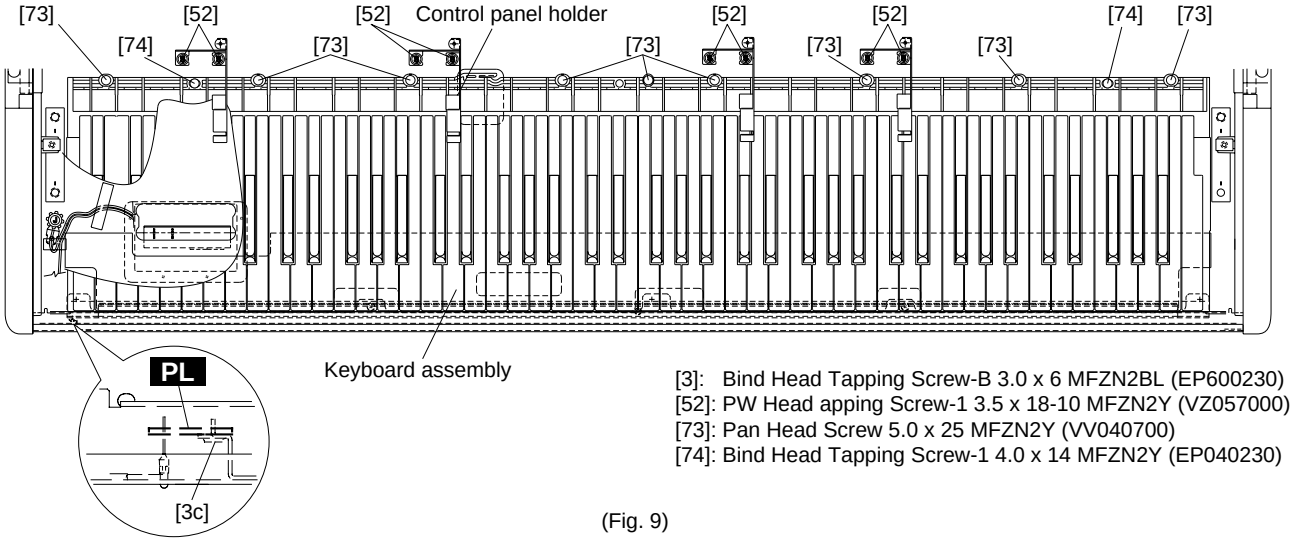

[3]: Bind Head Tapping Screw-B 3.0 x 6 MFZN2BL (EP600230)
[52]: PW Head apping Screw-1 3.5 x 18-10 MFZN2Y (VZ057000)
[73]: Pan Head Screw 5.0 x 25 MFZN2Y (VV040700)
[74]: Bind Head Tapping Screw-1 4.0 x 14 MFZN2Y (EP040230)

(Fig. 9)

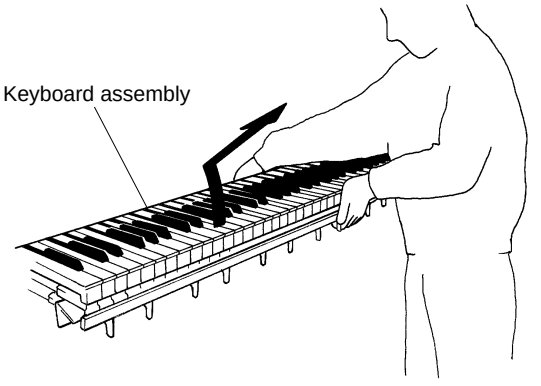

(Fig. 10)

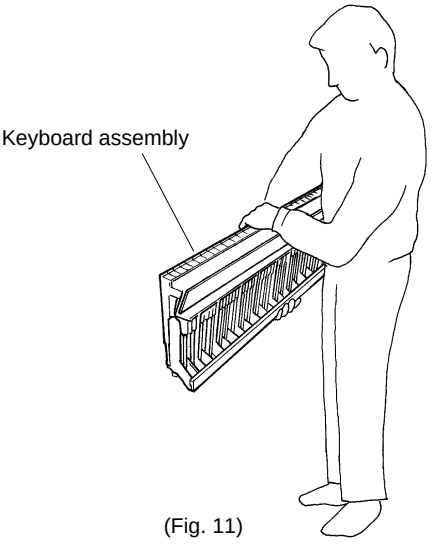

(Fig. 11)

9 Arm Assembly

9-1 Remove the top board assembly. (See Procedure 1.)
9-2 Remove the key cover assembly. (See Procedure 3.)
9-3 Remove the control panel assembly. (See Procedure 5.)
9-4 Remove the keyboard assembly. (See Procedure 8.)
9-5 Remove the five (5) screws marked [8], the five (5) screws marked [7]. The arm assembly can then be removed. (Fig. 12)
* The right and left arm assembly can be removed in the same manner.

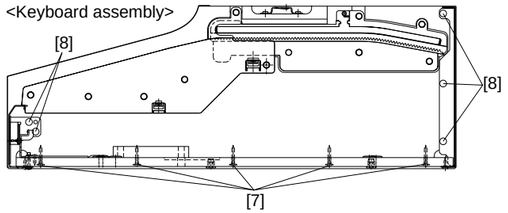

[7]: Truss Head Tapping Screw-1 3.5 x 25 MFZN2BL (EN630190)
[8]: Bind Head Tapping Screw-1 3.5 x 16 MFZN2Y (EP030190)
(Fig. 12)

10 PL Circuit Board

10-1 Remove the top board assembly. (See Procedure 1.)
10-2 Remove the key cover assembly. (See Procedure 3.)
10-3 Remove the control panel assembly. (See Procedure 5.)
10-4 Remove the keyboard assembly. (See Procedure 8.)
10-5 Remove the screw marked [3c]. The PL circuit board can then be removed. (Fig. 9)

11 HP Circuit Board

11-1 Remove the four (4) screws marked [54]. The headphone jack unit can then be removed. (Fig. 13)
11-2 Remove the two (2) hexagonal nuts marked [30]. The HP circuit board can then be removed. (Fig. 13)

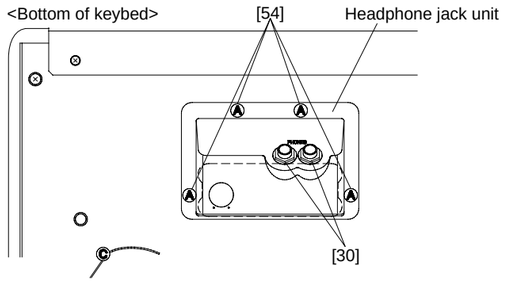

[30]: Hexagonal Nut 12.0 14 x 2 MFZN2BL (VB508600)
[54]: Bind Head Tapping Screw-1 3.5 x 14 MFZN2BL (EP030250)
(Fig. 13)

12 Speakers

12-1 Disconnect the speaker cable. (Fig. 14)
12-2 Remove the eight (8) screws marked [Ba].
12-3 Place a soft blanket or similar material on the floor near a wall, close the CVP-105 keybord cover, place the front panel of the CVP-105 (the side of the keyboard) on the blanket and gently lean the unit against the wall.
Making sure that the unit can not fall. (Fig. 16)
12-4 Remove the eight (8) screws marked [Bb]. The speaker box assembly can then be removed. (Fig. 14)
12-5 Remove the twenty (20) screws marked [27]. The SP top board assembly can then be removed. (Fig. 15)
12-6 Remove the four (4) screws marked [26]. The right speaker can then be removed. (Fig. 15)
* The right and left speakers can be removed in the same manner.

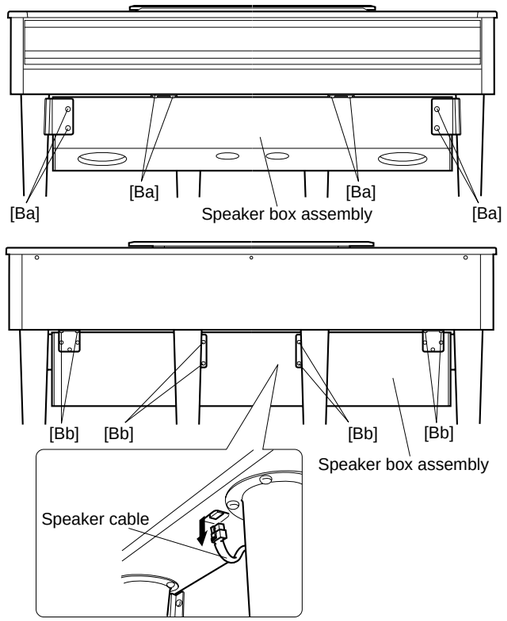

[B]: Cap screw 5.0 x 12 MFZN2BL (VS60870)
(Fig. 14)

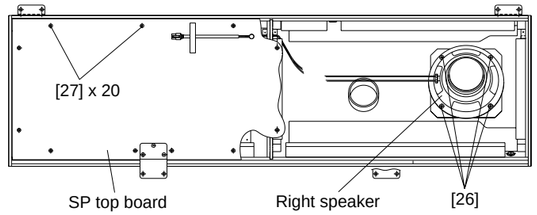

[26]: Truss Head Screw 4.0 x 20 MFZN2BL (VB934000)
[27]: Truss Head Tapping Screw 5.0 x 12 MFZN2BL (VU952600)
(Fig. 15)

13 Front and Rear Legs

13-1 Place a soft blanket or similar material on the floor near a wall, close the CVP-105 keybord cover, place the front panel of the CVP-105 (the side of the keyboard) on the blanket and gently lean the unit against the wall.
Making sure that the unit can not fall. (Fig. 16)
13-2 Disconnect the PK cable. (Fig. 16)
13-3 Remove the twelve (12) screws marked [C]. The rear leg can then be removed.(Fig. 16)
13-4 Remove the five (5) screws marked [D]. The front leg can then be removed. (Fig. 17)
* The right and left legs can be removed in the same manner.

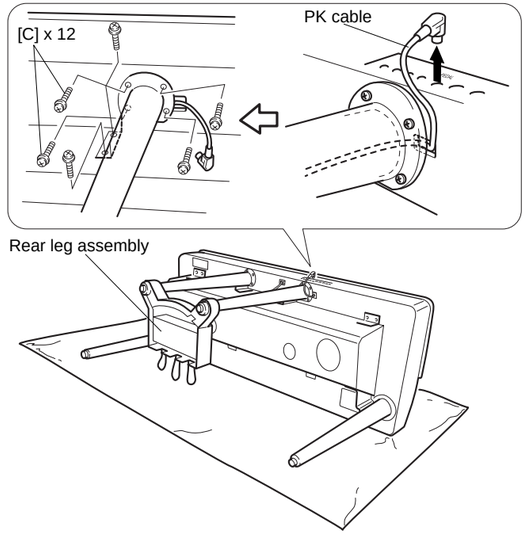

[C]: Cap screw 5.0 x 12 MFZN2BL (VS60870)
(Fig. 16)

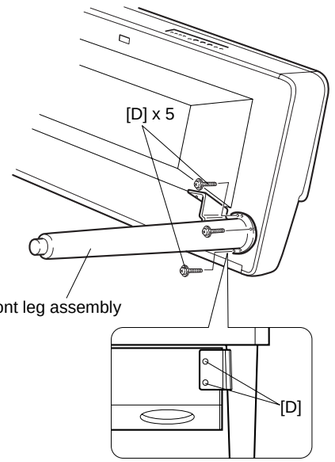

[D]: Cap screw 5.0 x 12 MFZN2BL (VS60870)
(Fig. 17)

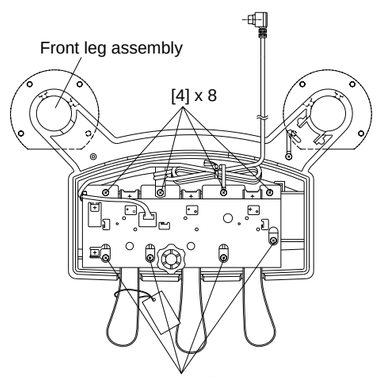

[4]: Bind Head Tapping screw-B 4.0 x 12 MFZN2BL (VR138400)
(Fig. 18)

14 Pedal Assembly

14-1 Place a soft blanket or similar material on the floor near a wall, close the CVP-105 keybord cover, place the front panel of the CVP-105 (the side of the keyboard) on the blanket and gently lean the unit against the wall.
Making sure that the unit can not fall. (Fig. 16)
14-2 Remove the rear leg unit. (See Procedure 13-3.)
14-3 Remove the eight (8) screws marked [4]. The pedal assembly can then be removed. (Fig. 18)

15 Disassembling the Keyboard

15-A Take the keyboard unit out of the main unit. (See Procedure 8.)

* After inserting a round stick (Rod: TX000670) between the frame and key, remove the circuit boards. (Fig. 19)

15-B AEXL88 L
Remove the AEXL88 L circuit board by removing the seven (7) screws marked [260A]. (Fig. 20)

15-C AEXL88 H
Remove the AEXL88 H circuit board by removing the ten (10) screws marked [260B]. (Fig. 20)

* Keys can be removed without removing the circuit boards.

* After removing the AEXL88 L and AEXL88 H circuit boards, and the rubbers can then be removed.

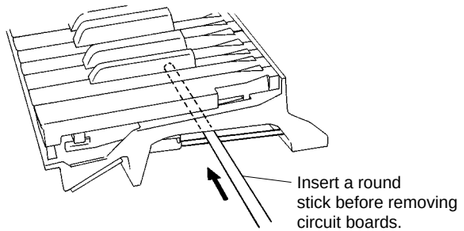

(Fig. 19)

15-D White key
Insert a thin plate between white keys, near the triangle mark around the fulcrum of the key, and press down the stopper marked [A] to remove the key. (Fig. 21, 22)

* Take care not to damage the key spring when removing a key.

* A black key can be removed after the white keys on either side have been removed.

15-E After a key has been removed, push the key spring down once to take it out of the hook. (Fig. 23)
Place the keyboard assembly upside down and peel away the stopper L88. The hammer of the white key can then be removed. (Fig. 24)

* The hammer of a black key can be removed in the same manner.

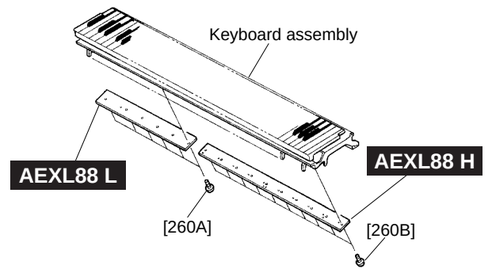

[260]: Bind Head Tapping Screw-P 3.0 x 10 MFZN2 (VT413400)

(Fig. 20)

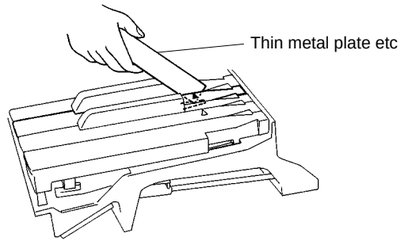

(Fig. 21)

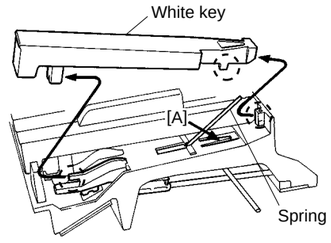

(Fig. 22)

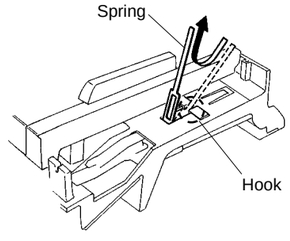

(Fig. 23)

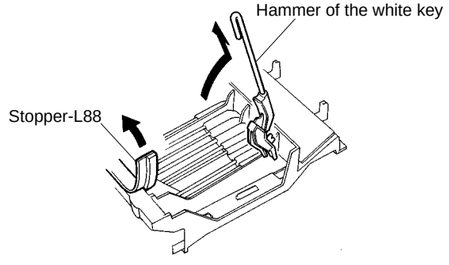

(Fig. 24)

16 Assembling the Keyboard

16-A Place the keyboard assembly upside-down, insert a hammer assembly into the frame, and put the stopper (L88) on. (Fig. 25)

* There are four kinds of hammers that differ in weight.

16-B Place the keyboard assembly rightside up. Fix key springs on the frame by setting one at each slit and pushing down once on each key spring. (Fig. 25, 26)

* Be careful of the direction of the spring.

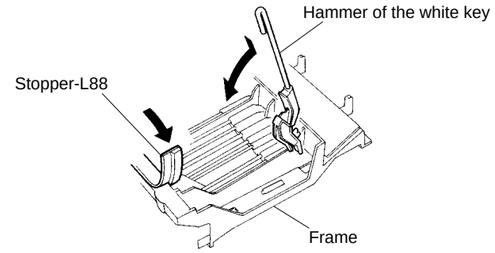

(Fig. 25)

16-C After a key has been fit to part [F] and key guide, make sure that the spring is fixed to the key and then press down part [E] of the key. (Fig. 27)

16-D Tighten the seven (7) screws marked [260A] to fix the AEXL88 L circuit board. (Fig. 20)

16-E Tighten the ten (10) screws marked [260B] to fix the AEXL88 H circuit board. (Fig. 20)

* Install the circuit boards in the keyboard assembly so that the hooks hold it as shown in figure 28.

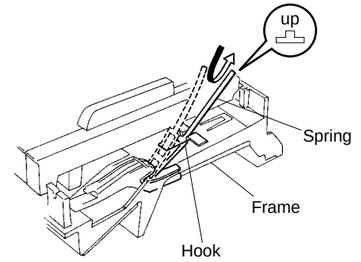

(Fig. 26)

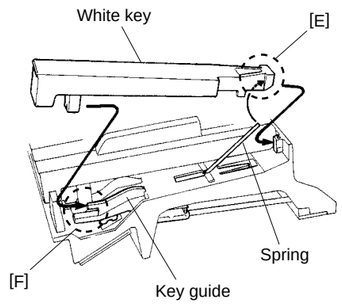

(Fig. 27)

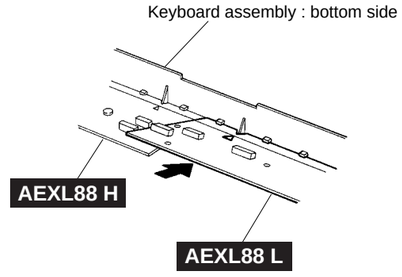

(Fig. 28)

■ LSI PIN DESCRIPTION

● **HD6437043AF09** (XV664100) **CPU**

DM : IC100

PIN NO.	NAME	I/O	FUNCTION	PIN NO.	NAME	I/O	FUNCTION
1	/WRHH	O	HH write	73	D15	I/O	
2	PE14	O	Port E	74	D14	I/O	Data bus
3	/WRHL	O	HL write	75	D13	I/O	
4	CASHH/PA21	I/O	HH Column address strobe/Port A	76	D12	I/O	
5	DACK1/PE15	O	DMA transfer strobe/Port E	77	VCC	I	Power supply
6	VSS	I	Ground	78	D11	I/O	Data bus
7	A0	O		79	VSS	I	Ground
8	A1	O		80	D10	I/O	
9	A2	O	Address bus	81	D9	I/O	
10	A3	O		82	D8	I/O	Data bus
11	A4	O		83	D7	I/O	
12	VCC	I	Power supply	84	D6	I/O	
13	A5	O	Address bus	85	VCC	I	Power supply
14	VSS	I	Ground	86	D5	I/O	Data bus
15	A6	O		87	VSS	I	Ground
16	A7	O		88	D4	I/O	
17	A8	O		89	D3	I/O	
18	A9	O		90	D2	I/O	Data bus
19	A10	O		91	D1	I/O	
20	A11	O	Address bus	92	D0	I/O	
21	A12	O		93	VSS	I	Ground
22	A13	O		94	XTAL	I	Crystal oscillator
23	A14	O		95	MD3	I	Mode select
24	A15	O		96	EXTAL	I	Crystal oscillator
25	A16	O		97	MD2	I	Mode select
26	VCC	I	Power supply	98	NMI	-	Non-maskable interrupt
27	A17	O	Address bus	99	VCC	I	Power supply
28	VSS	I	Ground	100	PA16	I/O	Port A
29	/CASHL/PA20	I/O	HL Column address strobe/Port A	101	PA17	I/O	Port A
30	PA19	I/O	Port A	102	MD1	I	Mode select
31	/RAS/PB2	O	Row address strobe/Port B	103	MD0	I	Mode select
32	/CASL/PB3	O	Column address strobe (low) /Port B	104	PLLVCC	I	PLL Power supply
33	PA18	I/O	Port A	105	PLLCAP	I	PLL capacitor
34	/CASH/PB4	O	Column address strobe (high) /Port B	106	PLLVSS	I	PLL Ground
35	VSS	I	Ground	107	CK/PA15	I/O	Clock/Port A
36	RDWR/PB5	O	DRAM read/write /Port B	108	/RES	I	Reset
37	A18	O		109	TIOC0A/PE0	I/O	MTU input capture/output compare (ch 0)/Port E
38	A19	O	Address bus	110	PE1	I/O	Port E
39	A20	O		111	/DREQ1/PE2	I/O	DMA transfer request/Port E
40	VCC	I	Power supply	112	VCC	I	Power supply
41	A21	O	Address bus	113	PE3	I/O	
42	VSS	I	Ground	114	PE4	I/O	Port E
43	/RD	O	Read	115	PE5	I/O	
44	/WDTOVF	O	Watch dog timer overflow	116	PE6	I/O	
45	D31	I/O	Data bus	117	VSS	I	Ground
46	D30	I/O	Data bus	118	AN0 /PF0	I	
47	/WRH	O	High write	119	AN1/ PF1	I	
48	/WRL	O	Low write	120	AN2 /PF2	I	
49	/CS1	O	Chip select	121	AN3 /PF3	I	Analog input/Port F
50	/CS0	O	Chip select	122	AN4 /PF4	I	
51	/IRQ3/PA9	I/O	Interrupt request/Port A	123	AN5/PF5	I	
52	/IRQ2/PA8	I/O	Interrupt request/Port A	124	AVSS	I	Analog ground
53	/CS3	O	Chip select	125	AN6/PF6	I	Analog input/ Port F
54	/CS2	O	Chip select	126	AN7/PF7	I	Analog input /Port F
55	VSS	I	Ground	127	AVREF	I	Analog reference voltage
56	D29	I/O		128	AVCC	I	Analog power supply
57	D28	I/O		129	VSS	I	Ground
58	D27	I/O	Data bus	130	RxDO	I	Receive data
59	D26	I/O		131	TxDO	O	Transmit data
60	D25	I/O		132	/IRQ0/SCK0	I	Interrupt request/Serial clock
61	VSS	I	Ground	133	RxD1	I	Receive data
62	D24	I/O	Data bus	134	TxD1	I/O	SCI
63	VCC	I	Power supply	135	VCC	I	Power supply
64	D23	I/O		136	/IRQ1/SCK1	I	Interrupt request/Serial clock
65	D22	I/O		137	PE7	I/O	
66	D21	I/O		138	PE8	I/O	Port E
67	D20	I/O	Data bus	139	PE9	I/O	
68	D19	I/O		140	PE10	I/O	
69	D18	I/O		141	VSS	I	Ground
70	D17	I/O		142	PE11	I/O	
71	VSS	I	Ground	143	PE12	I/O	Port E
72	D16	I/O	Data bus	144	PE13	I/O	

● **MN101C027YB** (XS711200) **CPU** PNL : IC001

PIN NO.	NAME	I/O	FUNCTION	PIN NO.	NAME	I/O	FUNCTION
1	S1	I	Switch matrix data	33	S12	I	Switch matrix data
2	S2	I		34	S13	I	
3	S3	I		35	S14	I	
4	S4	I		36	TXD	O	MIDI transmit data
5	S5	I		37	S15	I	Switch matrix data
6	VREF+	-	Power supply (+5 V, analog)	38	S16	I	
7	VDD	-	Power supply (+5 V)	39	S17	I	
8	OSC2	O	Crystal oscillator (8 MHz)	40	S18	I	
9	OSC1	I	Crystal oscillator (8 MHz)	41	L16	O	LED drive data
10	VSS	-	Ground	42	L17	O	
11	XI	I	Not used	43	L18	O	
12	XO	O	Not used	44	L19	O	
13	MMOD	I	Memory mode select (Grounded)	45	L8	O	
14	RD0	O	Rotary encoder data	46	L9	O	
15	RXD	I	MIDI receive data	47	L10	O	
16	D0	O	LED and switch drive data	48	L11	O	
17	D1	O		49	L12	O	
18	D2	O		50	L13	O	
19	D3	O		51	L14	O	
20	D4	O		52	L15	O	
21	/RST	I	Reset	53	L7	O	LED and switch drive data
22	D5	O	LED and switch drive data	54	L6	O	
23	D6	O		55	L5	O	
24	D7	O		56	L4	O	
25	D8	O		57	L3	O	
26	D9	O		58	L2	O	
27	S6	I	Switch matrix data	59	L1	O	
28	S7	I		60	L0	O	
29	S8	I		61	VREF	-	Grounded
30	S9	I		62	AD0	I	Analog input
31	S10	I		63	AD1	I	Analog input
32	S11	I		64	S0	I	Switch matrix data

● **HD63266F** (XI939A00) **FDC** (Floppy Disk Controller) DM : IC700

PIN NO.	NAME	I/O	FUNCTION	PIN NO.	NAME	I/O	FUNCTION
1	8"//5"	I	Data transmission speed	33	/TRKO	I	Track 00 signal
2	XTALSET	I	Clock select	34	/INDEX	I	Index signal
3	/RESET	I	Rest	35	/RDATA	I	Read data input from FDD
4	E//RD	I	Enable/Read	36	XTAL2		Clock
5	RW//WR	I	Read/write/Write	37	EXTAL2		
6	/CS	I	Chip select	38	NC		
7	/DACK	I	DMA acknowledge	39	XTAL1		Clock
8	RS0	I	Register select	40	EXTAL1		
9	RS1	I		41	VSS4		Ground
10	VSS1		Ground	42	VSS5		
11	VSS2			43	NC		
12	D0	I/O	Data bus	44	VCC2		Power supply
13	D1	I/O		45	VCC3		
14	D2	I/O		46	VCC4		
15	D3	I/O		47	/WGATE	O	Write control
16	D4	I/O		48	/WDATA	O	Writ data to FDD
17	D5	I/O		49	VSS6		Ground
18	D6	I/O		50	/STEP	O	Step signal to control head of FDD
19	D7	I/O		51	/HDIR	O	Direction
20	/DREQ	O	DMA request	52	/HLOAD	O	Head load
21	/IRQ	O	Interrupt request	53	/HSEL	O	Head select
22	/DEND	I	Data end	54	VSS7		Ground
23	VSS3		Ground	55	/DS0	O	Drive select
24	1/2 EX1			56	/DS1	O	
25	VCC1		Power supply	57	/DS2	O	
26	NUM1	I		58	/DS3	O	
27	NUM3	I		59	VSS8		Ground
28	IFS	I	Host interface select	60	/MON0	O	Motor on
29	SFORM	I	Format data	61	/MON1	O	
30	/INP	I	Index pulse	62	/MON2	O	
31	/READY	I	Ready from FDD	63	/MON3	O	
32	/WPRT	I	Write control signal	64	VSS9		Ground

● **HG73C205AFD** (XU947C00) **SWX00B** TONE GENERATOR DM : IC200, 220

PIN NO.	NAME	I/O	FUNCTION	PIN NO.	NAME	I/O	FUNCTION
1	ICN	I	Initial clear	85	CMA3	O	Program address bus
2	RFCLKI	I	PLL Clock	86	CMA8	O	Program address bus
3	TM2	I	PLL Control	87	CMA2	O	Program address bus
4	AVDD_PLL		Power supply	88	CRD	O	read signal
5	AVSS_PLL		Ground	89	CMA1	O	Program address bus
6	MODE0	I	SWX dual mode	90	CUB	O	high byte effective signal
7	VCC7		Power supply	91	VCC91		Power supply
8	GND8		Ground	92	GHND92		Ground
9	XIN	I	crystal oscillator	93	CS1	O	CS signal
10	XOUT	O	crystal oscillator	94	CMA0	O	Program address bus
11	MODE1	I	SWX separate mode	95	CLB	O	low byte effective signal
12	TEST0	I	TEST pin	96	CMA12	O	Program address bus
13	TESTON	I	TEST pin	97	CMA11	O	Program address bus
14	AN0-P40	I	A/D converter	98	CMA10	O	Program address bus
15	AN1-P41	I	A/D converter	99	CMA9	O	Program address bus
16	AN2-P42	I	A/D converter	100	GND100		Ground
17	AN3-P43	I	A/D converter	101	CWE	O	write signal
18	AVDD_AN		Power supply	102	CMA16	O	Program address bus
19	AVSS_AN		Ground	103	CMA15	O	Program address bus
20	TXD0	O	for MIDI or TO-HOST	104	CMA14	O	Program address bus
21	TXD1	O	for MIDI	105	CMA13	O	Program address bus
22	EXCLK	I	Crystal oscillator	106	CMD8	I/O	Program memory Data bus
23	SMD11	I/O	Wave memory data bus	107	CMD7	I/O	Program memory Data bus
24	SMD4	I/O	Wave memory data bus	108	CMD9	I/O	Program memory Data bus
25	SMD3	I/O	Wave memory data bus	109	CMD6	I/O	Program memory Data bus
26	SMD12	I/O	Wave memory data bus	110	CMD10	I/O	Program memory Data bus
27	SMD10	I/O	Wave memory data bus	111	CMD5	I/O	Program memory Data bus
28	SMD5	I/O	Wave memory data bus	112	CMD11	I/O	Program memory Data bus
29	SMD2	I/O	Wave memory data bus	113	CMD4	I/O	Program memory Data bus
30	SMD13	I/O	Wave memory data bus	114	CMD12	I/O	Program memory Data bus
31	SMD9	I/O	Wave memory data bus	115	CMD3	I/O	Program memory Data bus
32	SMD6	I/O	Wave memory data bus	116	CMD13	I/O	Program memory Data bus
33	SMD1	I/O	Wave memory data bus	117	CMD2	I/O	Program memory Data bus
34	SMD14	I/O	Wave memory data bus	118	CMD14	I/O	Program memory Data bus
35	VCC35		Power supply	119	VCC119		Power supply
36	GND36		Ground	120	GND115		Ground
37	SMD8	I/O	Wave memory data bus	121	CMD1	I/O	Program memory Data bus
38	SMD7	I/O	Wave memory data bus	122	CMD15	I/O	Program memory Data bus
39	SMD0	I/O	Wave memory data bus	123	CMD0	I/O	Program memory Data bus
40	SMD15	I/O	Wave memory data bus	124	CMA21	O	Program address bus
41	SOE	O	read signal	125	PDT15	I/O	SWX access data bus
42	SWE	O	write signal	126	PDT14	I/O	SWX access data bus
43	SRAS	O	RAS signal	127	PDT13	I/O	SWX access data bus
44	SCAS	O	CAS signal	128	PDT12	I/O	SWX access data bus
45	REFRESH	O	REFRESH signal	129	PDT11	I/O	SWX access data bus
46	CS0	O	CS signal	130	PDT10	I/O	SWX access data bus
47	SMA0	O	Memory address bus	131	PDT9	I/O	SWX access data bus
48	SMA16	O	Memory address bus	132	PDT8	I/O	SWX access data bus
49	VCC49		Power supply	133	VCC133		Power supply
50	GND50		Ground	134	GND134		Ground
51	SMA1	O	Memory address bus	135	PDT7	I/O	SWX access data bus
52	SMA15	O	Memory address bus	136	PDT6	I/O	SWX access data bus
53	SMA2	O	Memory address bus	137	PDT5	I/O	SWX access data bus
54	SMA14	O	Memory address bus	138	PDT4	I/O	SWX access data bus
55	SMA3	O	Memory address bus	139	PDT3	I/O	SWX access data bus
56	SMA13	O	Memory address bus	140	PDT2	I/O	SWX access data bus
57	SMA4	O	Memory address bus	141	PDT1	I/O	SWX access data bus
58	SMA12	O	Memory address bus	142	PDT0	I/O	SWX access data bus
59	SMA5	O	Memory address bus	143	VCA143		Power supply
60	GND60		Ground	144	GND144		Ground
61	VCC61		Power supply	145	PAD2	I	SWX access address bus
62	SMA11	O	Memory address bus	146	PAD1	I	SWX access address bus
63	SMA6	O	Memory address bus	147	PAD0	I	SWX access address bus
64	SMA10	O	Memory address bus	148	VCC148		Power supply
65	SMA7	O	Memory address bus	149	GND149		Ground
66	SMA9	O	Memory address bus	150	PCS	I	Chip select
67	SMA17	O	Memory address bus	151	PWR	I	write enable
68	SMA8	O	Memory address bus	152	PRD	I	read enable
69	SMA18	O	Memory address bus	153	RXD0	I	for Midi or TO-HOST
70	SMA19	O	Memory address bus	154	RXD1	I	for Midi or Key scan
71	SMA20	O	Memory address bus	155	SCLKI	I	EXT Clock
72	SMA21	O	Memory address bus	156	ADIN	I	A/D converter
73	SMA22	O	Memory address bus	157	ADLR	O	A/D converter LR clock
74	SMA23	O	Memory address bus	158	DO0	O	DAC
75	CMA20	O	Program address bus	159	DO1	O	DAC
76	CMA19	O	Program address bus	160	SYSCLK	O	1/2 clock
77	VCC77		Power supply	161	VCC161		Power supply
78	GND78	O	Ground	162	GND162		Ground
79	CMA18	O	Program address bus	163	WCLK	O	for DAC LR clock
80	CMA17	O	Program address bus	164	QCLK	O	1/12 clock
81	CMA5	O	Program address bus	165	BCLK	O	IIS-DAC clock
82	CMA6	O	Program address bus	166	SYI	I	Synch signal
83	CMA4	O	Program address bus	167	IRQ0	I	Interrupt request
84	CMA7	O	Program address bus	168	NMI	I	Interrupt request

● **SED1335F0B** (XQ595A00) **LCDC** (LCD Controller) DM : IC600

PIN NO.	NAME	I/O	FUNCTION	PIN NO.	NAME	I/O	FUNCTION
1	VA5	O	VRAM address bus	31	XD2	O	Data bus output for 4 bit dot
2	VA4	O		32	XD1	O	
3	VA3	O		33	XD0	O	
4	VA2	O		34	XECL	O	S driver enable, chain clock
5	VA1	O		35	XSCL	O	Data bus shift clock
6	VA0	O		36	Vss	-	Ground
7	/VWR	O	VRAM read/write	37	LP	O	X driver latch pulse
8	/VCE	O	Memory control	38	WF	O	Frame signal for X/Y driver
9	/VRD	-	Not used	39	YDIS	O	Power down signal for displaying off mode
10	/RES	I	Initial clear	40	YD	O	Scan start signal
11	NC	-	Not used	41	YSCL	O	Scan shift clock
12	NC	-	Not used	42	VD7	I/O	VRAM data bus
13	/RD	I	Read strobe	43	VD6	I/O	
14	/WR	I	Write strobe	44	VD5	I/O	
15	SEL2	I	Bus select	45	VD4	I/O	
16	SEL1	I	Bus select	46	VD3	I/O	
17	OSC1	I	Clock	47	VD2	I/O	
18	OSC2	O	Clock	48	VD1	I/O	
19	/CS	I	Chip select	49	VD0	I/O	
20	A0	I	Data mode select	50	VA15	O	VRAM address bus
21	Vdd	-	Power supply	51	VA14	O	
22	D0	I/O	Data bus	52	VA13	O	
23	D1	I/O		53	VA12	O	
24	D2	I/O		54	VA11	O	
25	D3	I/O		55	VA10	O	
26	D4	I/O		56	VA9	O	
27	D5	I/O		57	VA8	O	
28	D6	I/O		58	VA7	O	
29	D7	I/O		59	VA6	O	
30	XD3	O	Data bus output for 4 bit dot	60	NC	-	Not used

● **YMZ702-D** (XR632A00) **KSN2** (Key Scanner) AEXL88L : IC1

PIN NO.	NAME	I/O	FUNCTION	PIN NO.	NAME	I/O	FUNCTION
1	BK5	O	Key block (open drein)	21	GND		Ground
2	BK4	O		22	VDD		Power supply
3	BK3	O		23	SO	O	Serial data
4	BK2	O		24	ACK	I	Acknowledge/mode select
5	BK1	O		25	XCK	I	Clock for serial data
6	BK0	O		26	/IC	I	Initial clear
7	MK15	I	First make contact	27	TST1	I	Test mode
8	MK14	I		28	TST2	I	(L,L: normal mode, others: test)
9	MK13	I		29	XCKINH	I	Inhibit of serial clock
10	MK12	I		30	BK14	O	Key block (open drein)
11	MK11	I		31	BK13	O	
12	MK10	I		32	BK12	O	
13	MK05	I	Second make contact	33	BK11	O	
14	MK04	I		34	BK10	O	
15	MK03	I		35	BK9	O	
16	MK02	I		36	BK8	O	
17	MK01	I		37	BK7	O	
18	MK00	I		38	BK6	O	
19	XIN	I	Crystal osc. input (4 MHz)	39	GND		Ground
20	XOUT	O	Crystal osc. output (4 MHz)	40	VDD		Power supply

● **MSM82C51A-2GS-K** (XV513A00)

USART (Universal Synchronous Asynchronous receiver Transmitter) DM : IC400

PIN NO.	NAME	I/O	FUNCTION	PIN NO.	NAME	I/O	FUNCTION
1	D2	I/O	Data Bus	17	TXRDY	O	character data
2	D3	I/O	Data Bus	18	SYNDET/BD	I/O	character data
3	RXD	I	Serial Data	19	/CTS	I	input terminal for modem interface
4	NC			20	NC		
5	GND		Ground	21	TXEMPTY	O	character data
6	D4	I/O	Data Bus	22	TXD	O	character data
7	D5	I/O	Data Bus	23	CLK	I	Clock
8	D6	I/O	Data Bus	24	RESET	I	Reset
9	D7	I/O	Data Bus	25	/DSR	I	input port for modem interface
10	/TXC	I	Clock	26	/RTS	O	output port for modem interface
11	/WR	I	Write signal	27	/DTR	O	output port for modem interface
12	/CS	I	Device select	28	/RXC	I	Clock
13	NC			29	NC		
14	C//D	I	Access select signal	30	VCC	I	Power supply
15	/RD	I	Read signal	31	D0	I/O	Data Bus
16	RXRDY	O	character data	32	D1	I/O	Data Bus

● **PCM1716E** (XU829A00) **DAC** (Digital to Analog Converter) DM : IC800

PIN NO.	NAME	I/O	FUNCTION	PIN NO.	NAME	I/O	FUNCTION
1	LRCK	I		15	Vcc1	-	Analog power supply (+5 V)
2	DATA	I	Data input	16	VOUTL	O	Lch, analog voltage output
3	BCK	I	Bit clock	17	NC	-	
4	CLKO	O	Clock input	18	EXTL	O	Lch, analog output
5	XTI	I	Clock input	19	AGND2L	-	Analog ground
6	XTO	O	Clock out	20	Vcc2L	-	Analog power supply (+5 V)
7	DGND	-	Digital ground	21	/ZERO	O	Zero data flag
8	VDD	-	Digital power supply (+5 V)	22	/RST	I	Reset
9	Vcc2R	-	Analog power supply (+5 V)	23	/CS/IWO	I	Chip select
10	AGND2R	-	Analog ground	24	MODE	I	Mode control select (H: Software, L: Hardware)
11	EXTR	O	Rch, analog output	25	/MUTE	I	Mute control
12	NC	-		26	MD/DM0	I	Mode control data/De-emphasis select1
13	VOUTR	O	Rch, analog voltage output	27	MC/DM1	I	Mode control BCK/De-emphasis select2
14	AGND1	-	Analog ground	28	ML/IIS	I	Mode control Latch/input format select

■ IC BLOCK DIAGRAM

- **SN74HC02NSR** (XC724A00)
  Quad 2 Input NOR
  DM: IC 410

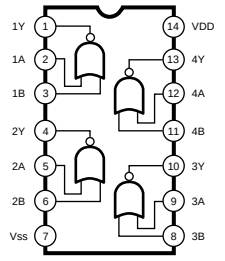

- **SN74HCU04NSR** (XC723A00)
  SN74HCU04N (IG142250)
  Hex Inverter
  DM: IC 430, 620
  JACK: IC 001

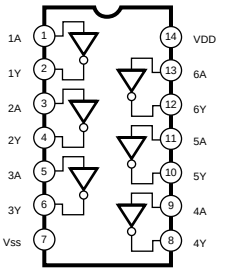

- **SN74HC132NS-R** (XL112A00)
  Quad 2 Input NAND
  DM: IC 030

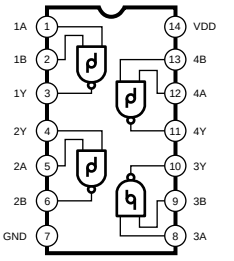

- **TC74HC139AF-TP1** (XE462A00)
  Dual 2 to 4 Demultiplexer
  DM: IC 560

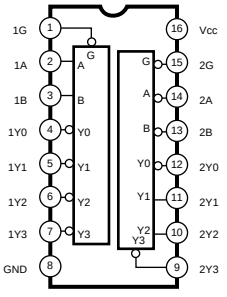

- **SN75C1168N** (XU463A00)
  Line Driver / Receiver
  JACK: IC 003

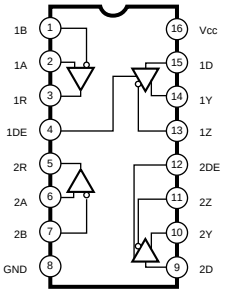

- **HD14069UBFP-EL** (XU369A00)
  Hex Inverter
  DM: IC 420

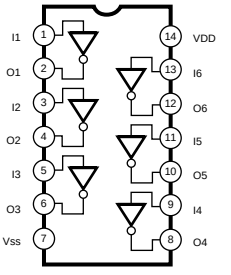

- **M5227P** (XF751A00)
  5-Band Graphic Equalizer
  JACK: IC 007, 008

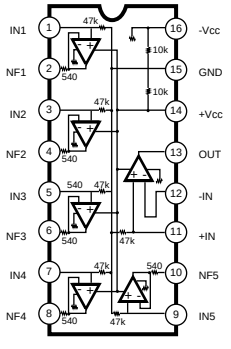

- µ**PC4570HA** (XB247A00)
  Dual Operational Amplifier
  JACK: IC 004, 006

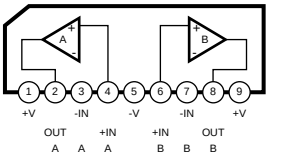

- **LA6517** (XM804A00)
  Dual Low Voltage Power Amplifier
  JACK: IC 005

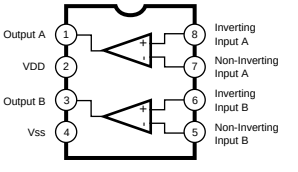

● **BA7725FS-E2** (XT129A00)
Comparder
MIC: IC 01

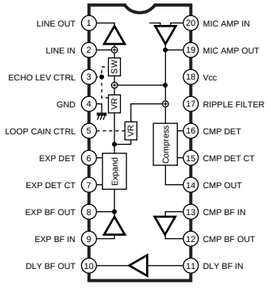

● **BU925F-E2** (XT130A00)
Digital Delay
MIC: IC 02

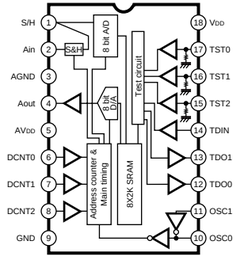

■ CIRCUIT BOARDS

DM Circuit Board (XV572C0) 20
ENC Circuit Board (XV483A0) 24
EQ Circuit Board (XU370D0) 20
FU60 Circuit Board (XQ395A0) 24
HP Circuit Board (XQ795A0) 21
INV Circuit Board (XT112A0) 23
JACK Circuit Board (XU370D0) 20
MA60 Circuit Board (XQ393E0) 24
MV Circuit Board (XV483A0) 24
NET WORK1 Circuit Board (XT123B0) 21
PEDAL Circuit Board (XR780B0) 21
PL Circuit Board (XL151B0) 21
PNGC Circuit Board (XS977A0) 22
PNGL Circuit Board (XV483A0) 23
PNGR Circuit Board (XV483A0) 23
PNL Circuit Board (XV482A0) 22
PNR Circuit Board (XV483A0) 24

Note : See parts list for details of circuit board component parts.

● DM Circuit Board

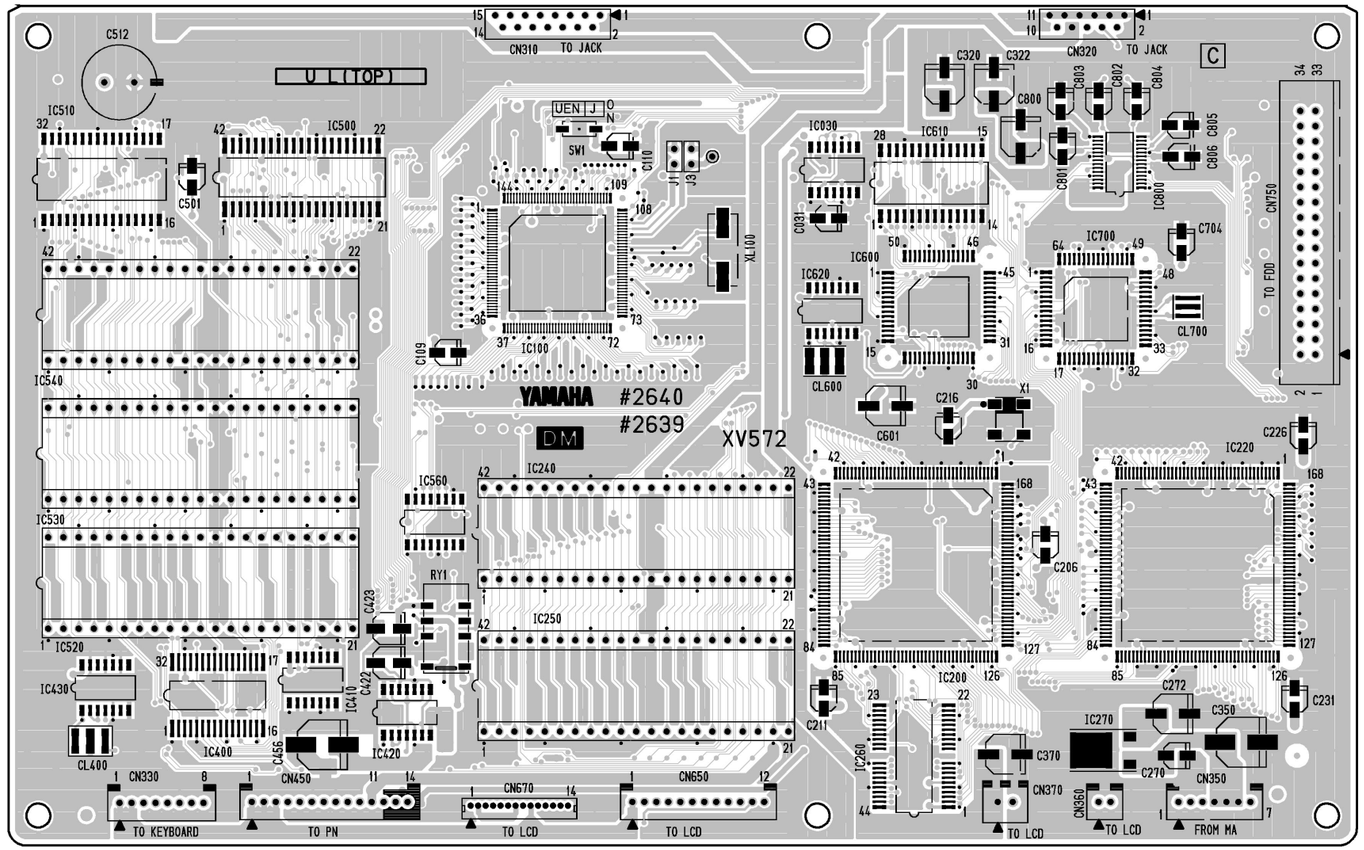

Component side

● JACK Circuit Board

Component side

● EQ Circuit Board

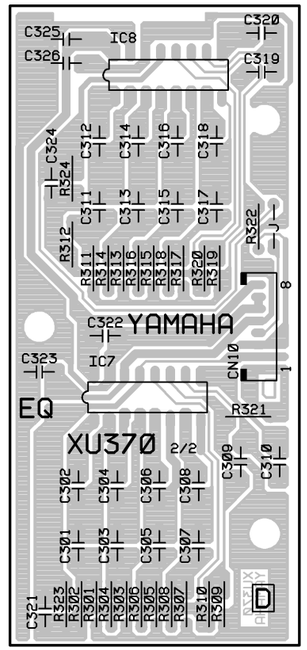

Component side

DM: 2NA-V315080⚠
JACK, EQ: 2NA-V315060

● DM Circuit Board

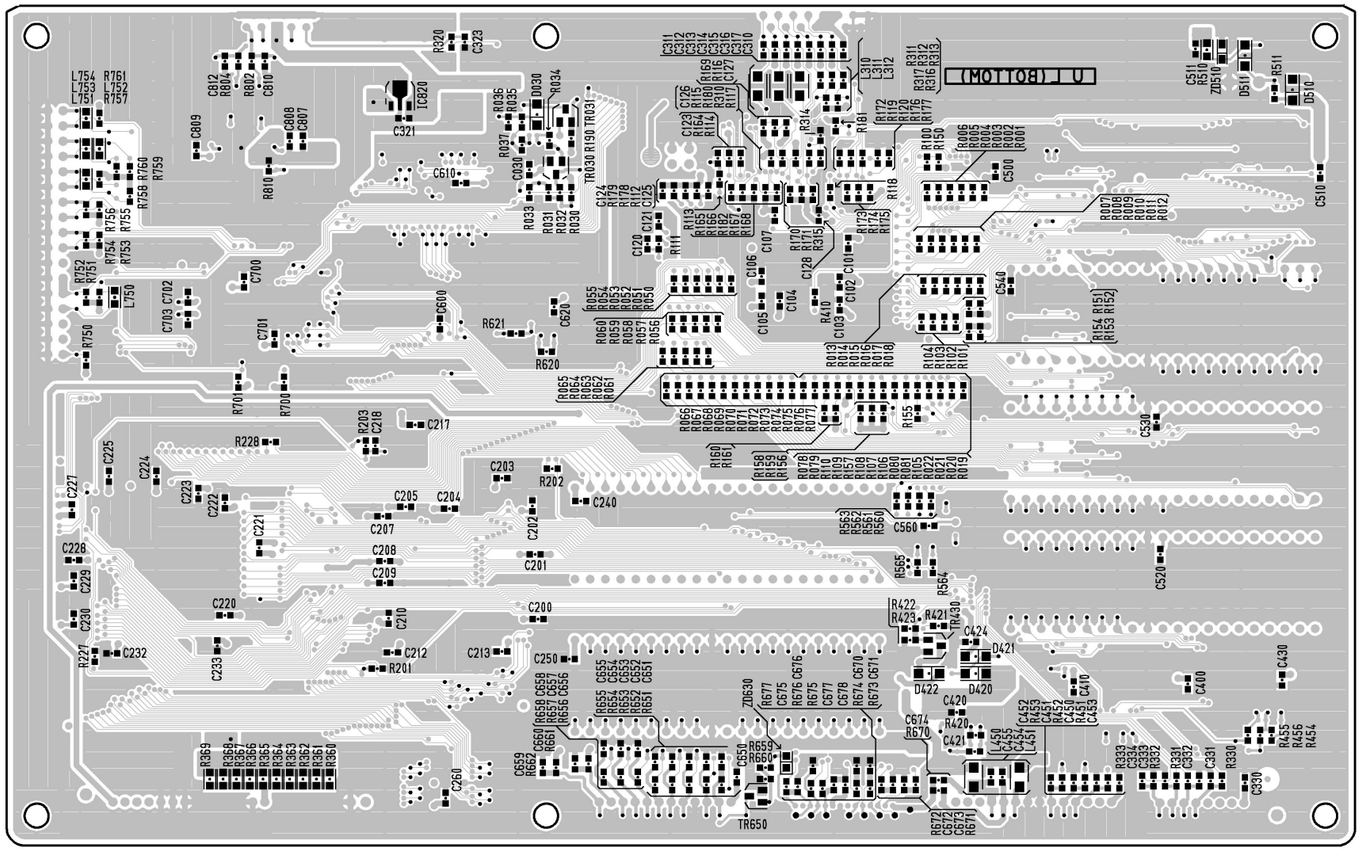

Pattern side

● NET WORK1 Circuit Board

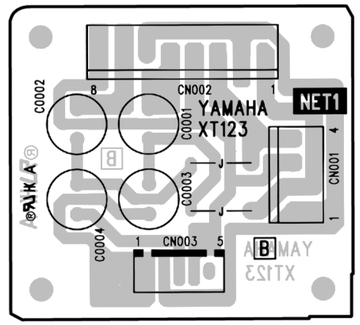

Component side

● PL Circuit Board

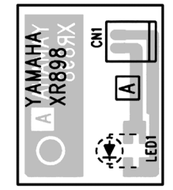

POWER indicator

Component side

● HP Circuit Board

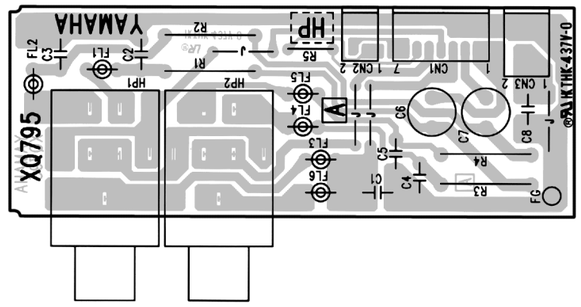

PHONES

Component side

● PEDAL Circuit Board

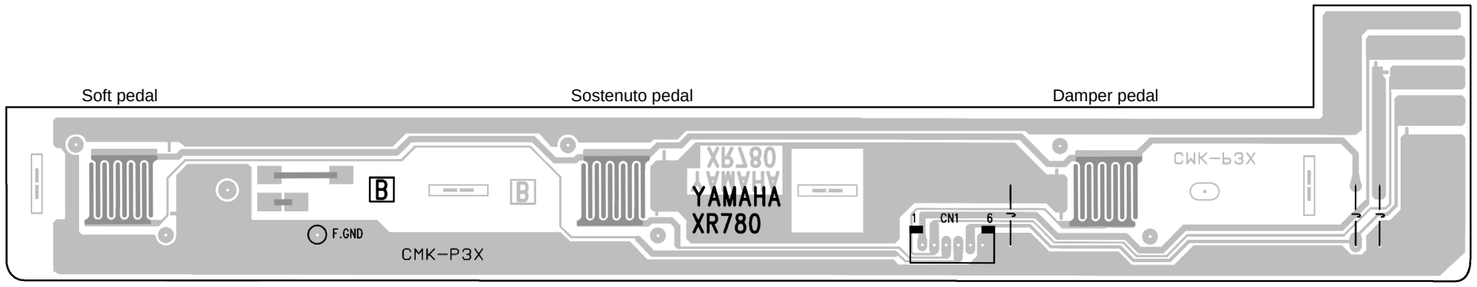

Component side

DM: 2NA-V315080⚠
NET WORK1: 2NA-V325580⚠
PEDAL: 2NA-VU69120⚠
PL: 2NA-VN63740
HP: 2NA-VT47830

● PNL Circuit Board

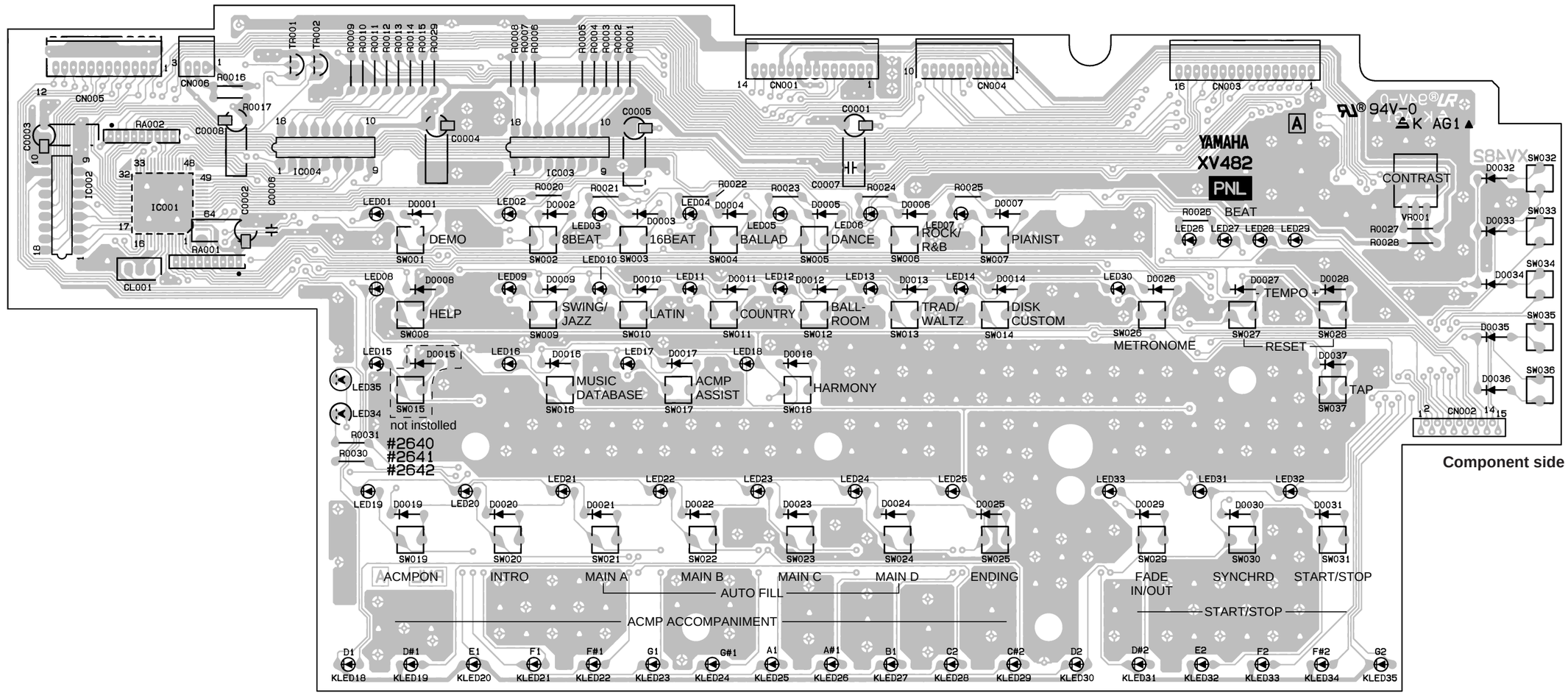

Component side

● PNGC Circuit Board

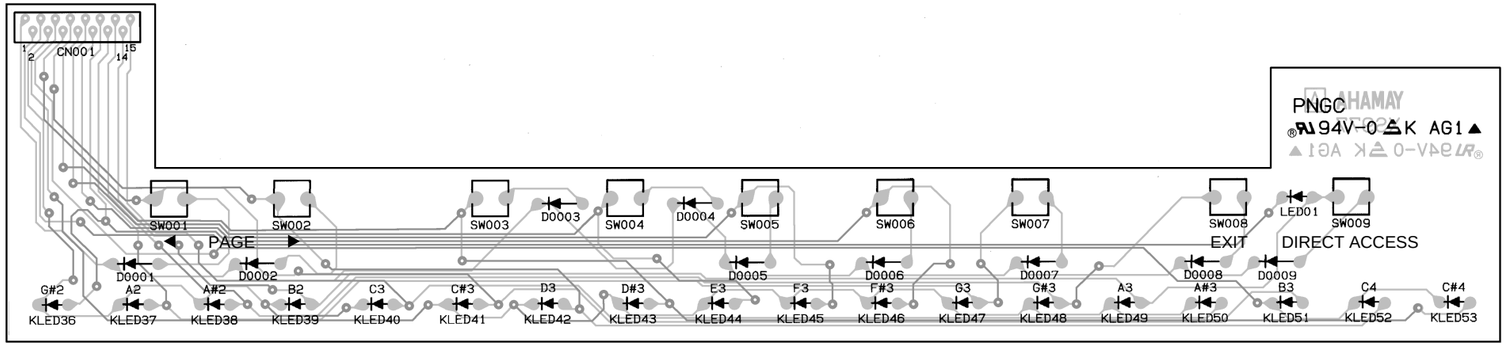

Component side

PNL: 2NA-X314960
PNGC: 2NA-VV88000

● PNL Circuit Board

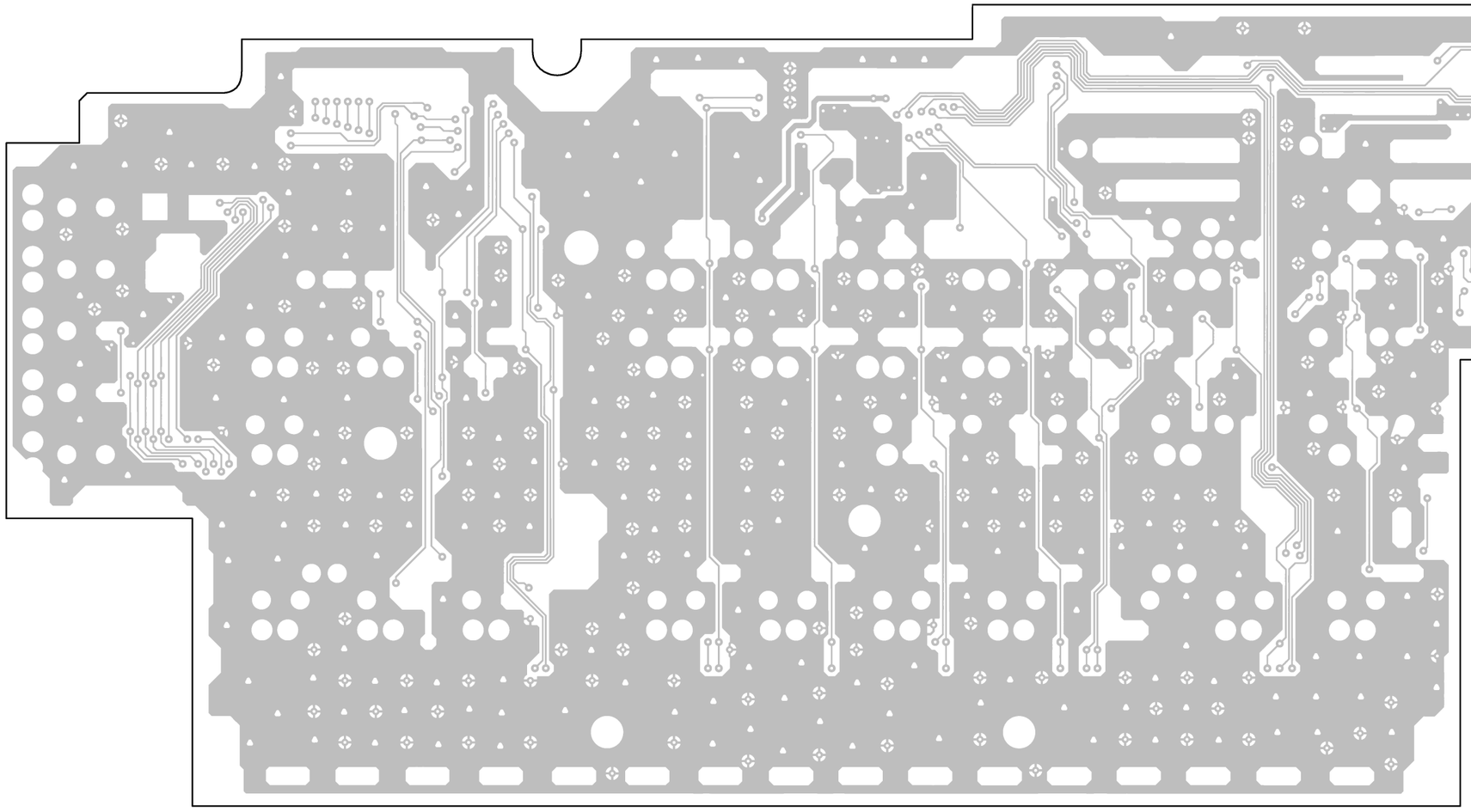

Pattern side

● INV Circuit Board

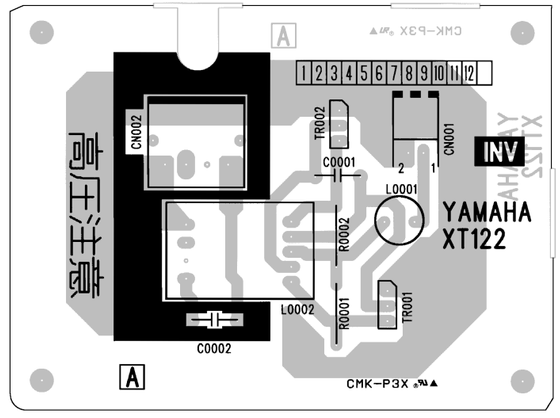

Component side

● PNGL Circuit Board

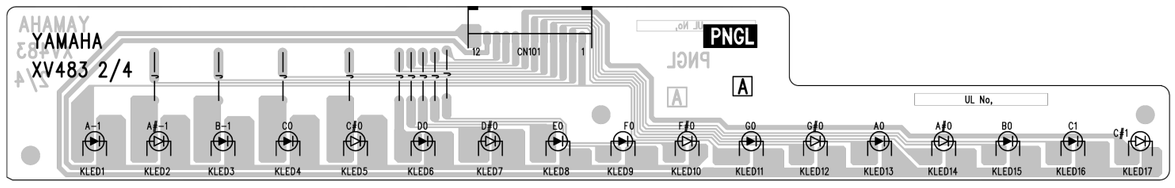

Component side

● PNGR Circuit Board

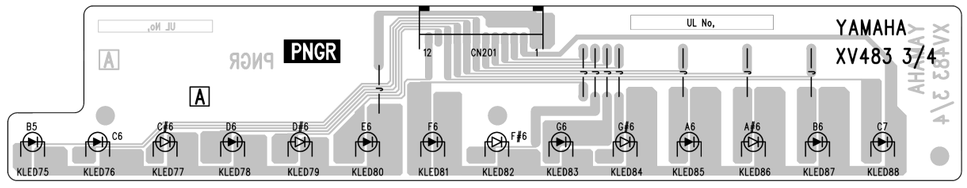

Component side

PNL: 2NA-X314960
PNGL, PNGR: 2NA-V313470⚠
INV: 2NA-VY63880

● PNR Circuit Board

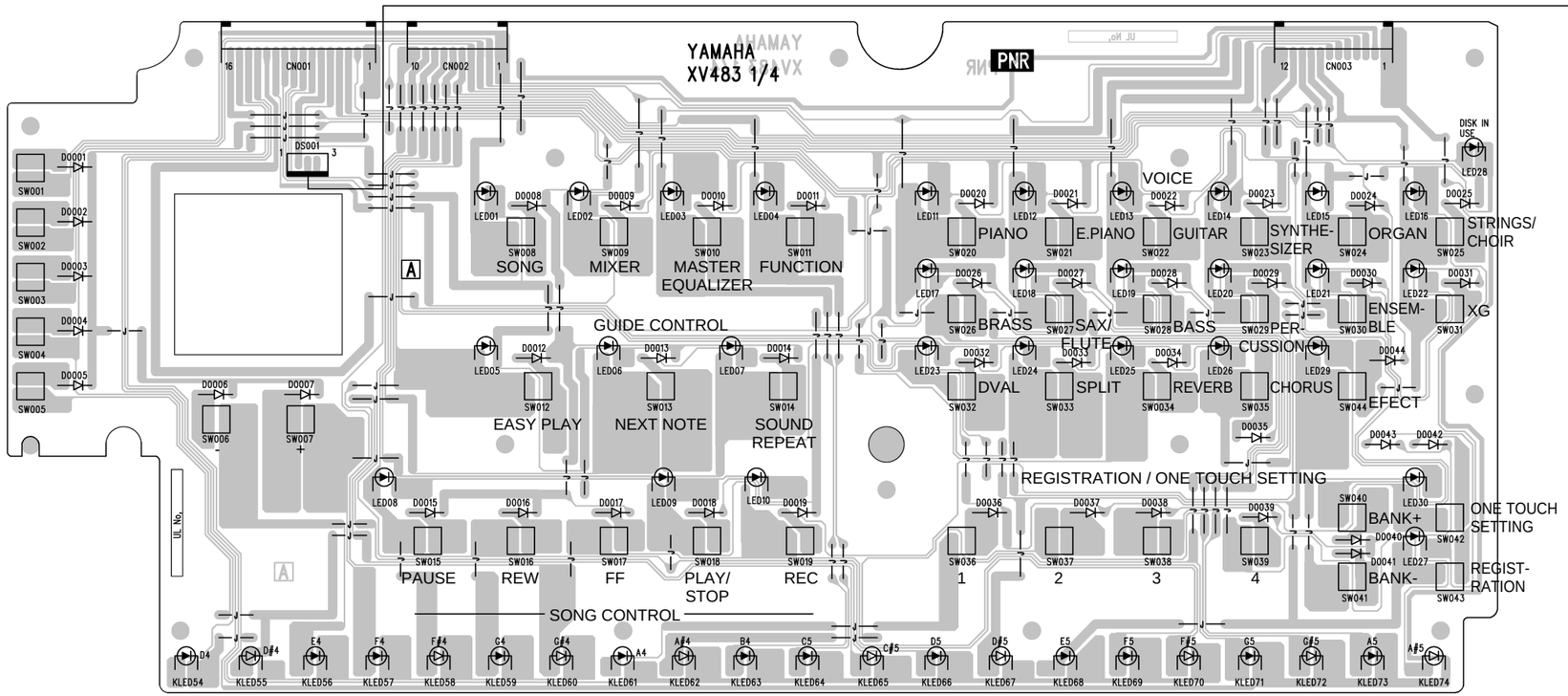

Component side

● ENC Circuit Board

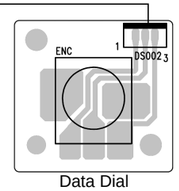

Data Dial

Component side

● MV Circuit Board

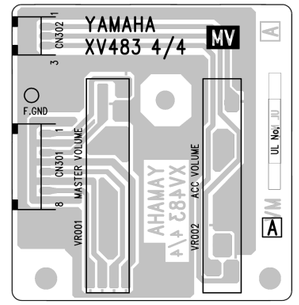

MASTER VOLUME

ACMP/SONG VOLUME

Component side

● FU60 Circuit Board

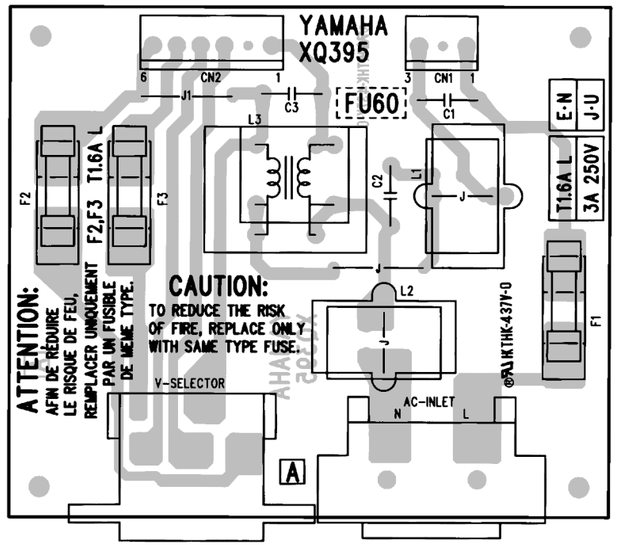

VOLTAGE SELECTOR

AC Inlet

Component side

● MA60 Circuit Board

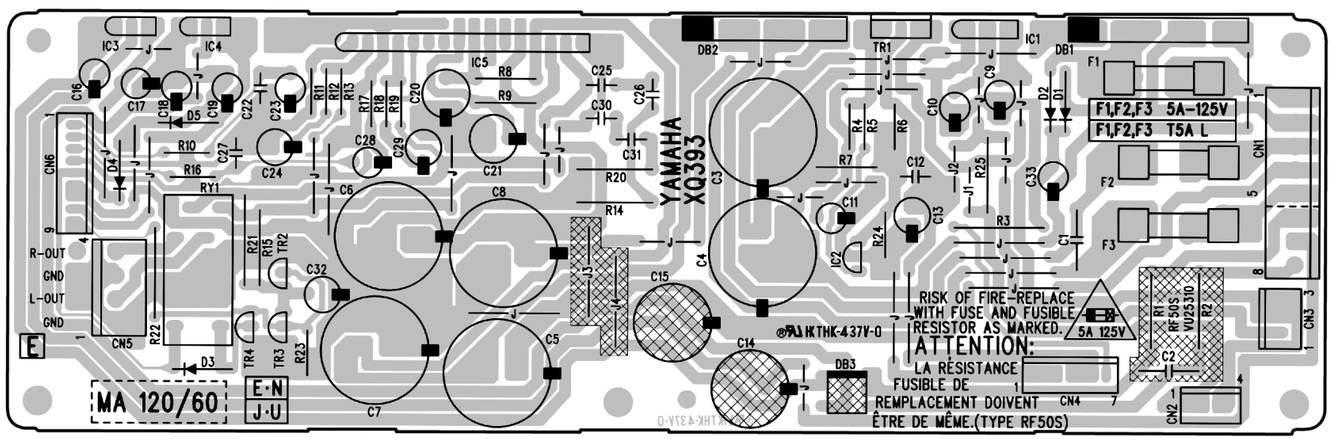

Component side

PNR(ENC), MV: 2NA-V313470⚠
MA60: 2NA-VT14410
FU60: 2NA-VT47830

■ TEST PROGRAM

1. Preparation

To check the unit using the test program, the following measuring instruments and jigs are required:

Level meter (IHF-C curve)
Frequency counter
Note: Impedance must be 1 MΩ or above.
Use stereo plugs, and connect a 33 Ω load at the [PHONES] terminal.
Floppy disks (2HD and 2DD)
Foot controller (FC-7)

Unit settings:

MASTER VOLUME:	Maximum
Tone:	PIANO
Pedal:	OFF
Reverb:	OFF
Terminals:	Not connected if not specified

2. How to enter the Test Program

While pressing the [C2#], [F2] and [G2#] keys, turn on the power switch.

3. Proceeding through the Test Program

Once inside the test program, the LCD will display “TEST MODE”.
To select the program number, use the [Tempo +] and the [Tempo -] buttons.
To start the test, press the [Start/Stop] button.
When the test result is ok, the LCD will display “OK”.
When the test result is no good, turn off the power swich and re-enter the test program.

Test Items

No.	LCD for Each Test	Test Functions and Judgment Criteria
1	001: Version	Displays ROM version (MAIN, WAVE, SCAN, STYLE)
2	002: ROM Check1	Checks the Program ROM and Data ROM
3	003: RAM Check1	Checks all RAMs that are connected to the CPU
4	004: Wave ROM Check1	Checks the wave ROM
7	007: FDD Check	Insert the floppy disks one by one (2DD and 2HD). Checks the floppy disk drive unit
9	009: Effect1 RAM Check	Checks the Reverb effect RAM Check that the C3 note is output and that there is no noise.
11	011: TG1 Check	Produces the sine wave sequence by changing the channels (1ch – 32ch) in order from A0 to C6. The guide lamps will light according to the sound. When a voice switch is pressed, the tone of the voice will sound. After autoscaling is finished, individual keys can be played. (If playing two or more keys simultaneously, the key pressed first has priority to make a sound.)
12	012: TG2 Check	Produces the sine wave sequence by changing the channels (33ch – 64ch) in order from A0 to C6. The guide lamps will light according to the sound. When a voice switch is pressed, the tone of the voice will sound. After autoscaling is finished, individual keys can be played. (If playing two or more keys simultaneously, the key pressed first has priority to make a sound.)
13	013: Pitch Check	Connect the frequency counter to the PHONES jacks. Check the output level (440 Hz).
14	014: Output R	Check the output level (1 kHz). AUX OUT L: Less than -35 dBm (-12 dBm +/-2 dB) AUX OUT R: -7 dBm +/-2 dB When the stereo plug is connected, check that the following output levels are shown: PHONES L: Less than -35 dBm PHONES R: -16 dBm +/-2 dB

No.	LCD for Each Test	Test Functions and Judgment Criteria
15	015: Output L	Check the output level (1 kHz). AUX OUT L: -7 dBm +/-2 dB AUX OUT R: Less than -35 dBm When the stereo plug is connected, check that the following output levels are shown: PHONES L: -16 dBm +/-2 dB PHONES R: Less than -35 dBm
16	016: EQ Low	For factory test use only (outputs the C1 sine wave tone)
17	017: EQ Mid	For factory test use only (outputs the C4 sine wave tone)
18	018: EQ High	For factory test use only (outputs the C7 sine wave tone)
19	019: D/A Noise	Checks D/A converter noise level. Play a note to check that there is no noise during the PIANO 1 release time. (The damper pedal should be ON.)
20	020: SW, LED Check	Check the switches and the LEDs on the panel. Press the switch that is displayed on the LCD. A pre-assigned note is output when the switch is pressed. (With some switches, the corresponding LED will light up.) Also check the dial by turning it; the LCD should display "OK". The LCD will display the numbers from 50 – 100 when turning the dial clockwise from the center and from 50 – 0 when turning the dial counter-clockwise from the center.
21	021: All Panel LED On	Check that all panel LEDs are lit.
22	022: All Red Panel LED On	Check that all red panel LEDs are lit.
23	023: All Green Panel LED On	Check that all green panel LEDs are lit.
25	025: All Key LED On	Check that all keyboard guide LEDs are lit.
26	026: All RED Key LED On	Check that all red keyboard LEDs are lit.
27	027: All Green Key LED On	Check that all green keyboard LEDs are lit.
28	028: All LCD Dot On	Check that all LCD dots are ON. The LCD becomes blue.
29	029: All LCD Dot Off	Check that all LCD dots are OFF. The LCD becomes white.
31	031: Soft Pedal Check	Check that the C3 note sounds when pushing the pedal and that the C4 sounds when releasing the pedal; the LCD should display "OK".
32	032: Soste, Pedal Check	Check that the C3 note sounds when pushing the pedal and that the C4 sounds when releasing the pedal; the LCD should display "OK".
33	033: Damper Pedal Check	Check that the C3 note sounds when pushing the pedal and that the C4 sounds when releasing the pedal; the LCD should display "OK".
37	037: MIDI Check	After connecting the MIDI IN and MIDI OUT, execute the test. The test result will appear on the LCD.
38	038: To Host Check	Connect pin 3 to pin 5 and pin 6 to pin 8 of the TO HOST terminal, and execute the test. Check that the following notes sound when changing the HOST SELECT switch position according to the LCD indication; the LCD should display "OK". Mac position: note C5; PC1 position: note C4; PC2 position: note C3
41	041: ROM Check2	Checks the Program ROM and Data ROM
42	042: RAM Check2	Checks all RAMs that are connected to CPU
43	043: Wave ROM Check2	Checks the Wave ROM
46	046: Back up Check2	For factory test use only
47	047: Factory Set	All RAMs are initialized and reset to the factory preset data when executing this test.
48	048: Test Mode Exit	Exit from the test program when executing this test.

Note: 0 dBm =0.775 V

INSPECTION

1. AUX OUT and PHONES

1-1 Apply a 1 kHz, -20 dBm sine wave to the AUX IN L/L+R. Confirm that the output meets the following specifications:

AUX OUT L/L+R:	-10 dBm +/- 2 dB	PHONES:	-17 dBm +/- 2 dB
AUX OUT R:	Less than -60 dBm	PHONES:	Less than -60 dBm

1-2 Apply a 1 kHz, -20 dBm sine wave to the AUX IN R. Confirm that the output meets the following specifications:

AUX OUT L/L+R:	Less than -60 dBm	PHONES:	Less than -60 dBm
AUX OUT R:	-10 dBm +/- 2 dB	PHONES:	-17 dBm +/- 2 dB

2. Noise Level

Confirm that the PHONES L and R output noise is less than -82 dBm when no sound is produced.

Note: 0 dBm = 0.775 V

FACTORY SETTINGS

The factory settings of the following parameters are not recallable:

- Help language
- Song volume
- Backup ON/OFF

All other settings can be reset to the initial factory values by turning the power switch on while holding down the rightmost key on the keyboard (C7).
When this is done, the message “Back up data erased and replaced by factory data” appears, to indicate that all backed up data has been erased and that the factory settings have been restored.
After this message has displayed for a few seconds, the main display will appear.

■ MESSAGES

● General (Panel Operation)

This button can't be used during recording or playback!

This message appears when you try to perform operations which cannot be done during recording or playback, such as data conversion, etc.

⇛ Stop song recording or playback, or exit from the recording/playback mode, then perform the operation again.

This button can't be used during playback!

This appears when you try to execute operations that cannot be performed during playback, such as changing the number of repeats of the Guide function.

⇛ Stop song playback, or exit from the playback mode, then perform the operation again.

This button can't be used while recording!

This message appears when you try to perform an operation (such as copying or deletion of song data) that cannot be performed in the Song Record mode.

⇛ Stop recording, or exit the Song Record mode, then perform the operation again.

This button can't be used when ACMP ASSIST is on!

This message appears when you try to perform an operation (such as the selection of a style, etc.) that cannot be performed during Accompaniment Assistance playback, or an operation (such as selection of a Guide Control function, etc.) that cannot be performed while editing Accompaniment Assistance data.

⇛ Turn the Accompaniment Assistance function off, then perform the operation again.

Button not valid!

A button that does not have a function in the current mode has been pressed.

● General (Direct Access)

Press a button to display corresponding settings.

This prompt appears when you press the [**DIRECT ACCESS**] button.

⇛ Press the panel button that corresponds to the settings you want to display. (Be sure to press the second button while this message is showing.)

DIRECT ACCESS not available for this function!

This message appears if you press [**DIRECT ACCESS**] followed by a panel button that does not correspond to a Direct Access display.

⇛ Press [**DIRECT ACCESS**] again, then press a panel button that corresponds to a Direct Access display.

● General (Disk-related)

No disk!

This prompt appears when there is no disk in the disk drive.

⇛ Put the proper disk in the drive and attempt the operation again.

No song!

When renaming the original song or converting the data this prompt will warn you in the event that there is no song data.

⇛ Select a data-containing song, or insert a disk with song data into the floppy disk drive.

No file!

This message appears if there is no Registration Memory, Micro Tuning, or related data on the currently inserted disk when you attempt a file-related operation.

⇛ Create a file or insert a disk with a proper file.

No data to save!

This message appears if you try to save Accompaniment Assistance data to disk when no Accompaniment Assistance data has been recorded. It also appears if you try to save a custom style to disk, but have selected a memory number that doesn’t contain any style data.

⇛ Create some Accompaniment Assistance data or a custom style, or select a memory number that contains custom style data.

Start disk format?

This message appears when a new disk or a non-Clavinova formatted disk has been inserted into the disk drive.

⇛ Press **OK** if you want to format the disk. Press **CANCEL** if you want to abort the formatting process.

Protected disk!

This message appears when you attempt to record or perform other file operations to a disk whose write-protect tab is set to "write protect."

⇛ Set the write-protect tab to the recordable position then try the operation again. If the operation still cannot be performed, the disk itself has internal write protection, making it impossible to perform recording or file operations on the disk.

Protected song!

This message appears when you attempt to record over parts or perform other operations on song files that are incompatible or do not allow such operations. Depending on the song file type, operations such as additional recording, copying, deleting, etc. may not be possible using the CVP-105.

Disk read/write error!

An error occurred while writing to (as in recording or storing files) or reading from the disk.

⇛ Try the operation again after pressing the **OK** button. If the error occurs a second time, the disk or the disk drive unit may be faulty.

Completed!

This appears for a few seconds when a time consuming operation such as format, song copy, etc. is finished.

Don't remove the disk!

This message appears when data is being transfered between the Clavinova and the disk.

⇛ The message disappears automatically when the operation is finished.

Are you sure?

When operations such as Song Delete or Format are selected, this prompts you to confirm whether you want to go ahead with the operation or not.

⇛ Press **YES** to execute the operation. Press **NO** to return to the previous display.

Disk full!

The currently loaded disk is full and cannot hold any more data.

⇛ Press the **OK** button, then delete any unnecessary data in the disk, or use a disk that has more available space. If this appears during song recording, recording will stop and recorded data up to that point will be saved automatically.

Too many files!

A 2DD and a 2HD disk can hold up to 60 song files each. A 2DD disk can hold about 110 files (of various types), and a 2HD disk can hold up to about 220 files.

This message appears when you try to produce more files than the disk is capable of storing.

⇛ Press the **OK** button, then delete any unnecessary files in the disk, or use a disk that has more available space.

Same name! Overwrite?

A file with the same name exists.

⇛ Press the **OK** button if you wish to overwrite the original file with new data, or press **CANCEL** to abort the operation.

Disk read/write operation in process!

This message appears when you try to execute other operations while reading data from the disk or saving data.

⇛ Wait until the data read/write operation is completed, then perform the operation again.

Convert to CVP song?

This message appears when you attempt to record over or edit data of commercially available software or data recorded on Clavinovas other than the CVP-103/103M/105/107/109.

⇛ Press **YES** to convert the data for recording/editing on the CVP-103/103M/105/107/109. Press **NO** if you don't want to convert the data.

● General (Memory-related)

Not enough memory!

This message appears when memory capacity has become full during recording in the Custom Style mode. This also appears when memory has become full during recording of a song to internal RAM. In this case, recording will stop and data recorded up to that point will be saved automatically.

Memory write operation in process!

This message appears when you attempt to execute another operation while writing edited data of a song recorded to internal RAM.

⇛ Complete the data write operation, then perform the other operation.

Delete CVP MEMORY?

This message appears when executing an operation that results in deleting data recorded to the internal RAM, such as playback of disk software.

⇛ Press **YES** to delete the data recorded to the internal RAM, then perform the desired operation. Press the NO button if you want to keep the data.

This button can't be used for CVP MEMORY!

This message appears if you try to select one of the following functions while editing song data that has been recorded to the internal memory: Chord Sequence, Step Edit, Song Name, Setup Memory, or Vocal Harmony Memory.

⇛ Use the Song Copy function to copy the song to a disk, delete the **CVP MEMORY** song, then perform the desired operation using the data on the disk.

● Custom Style Mode

CUSTOM STYLE Select a source style.

This message appears for a few seconds when the Custom Style mode is engaged.

Clear style?

This confirmation prompt appears when you attempt to change the beat parameter in the Custom Style mode.

Clear section?

This confirmation prompt appears when you attempt to change the number of measures in the Custom Style mode.

Clear part?

This confirmation prompt appears when you attempt to perform operations which can only be done after deleting the part of the original style in the Custom Style mode.

Store Bossa NovaX?

This confirmation prompt appears when you store a custom style. It also appears if you try to change styles before you've stored the custom style.

⇛ Select **OK** to store the custom style. Press **CANCEL** to return to the previous display without storing data.

This confirmation prompt appears when you attempt to exit the Custom Style mode before storing the custom style.

⇛ Select **YES** to store the custom style. Press NO to exit without storing. Press **CANCEL** to return to the previous display.

Can't recall!

This message appears when the previous version of the custom style cannot be recalled because the time signature has been changed.

Store in memory before saving to disk.

If the data has not been stored to memory before saving to disk in the Custom Style mode, this message prompts you to store the data before proceeding.

Not enough memory! Delete an unneeded style or simplify the current style.

This message appears if there is not enough internal memory space left when storing data in the Custom Style mode.

Select style to delete.

This message appears when DELETE is selected from the display shown above.

⇛ Select the style to be deleted and press the **OK** button. Press **CANCEL** if you do not want to delete the style.

Can't delete this style!

This message appears if the style selected for deletion in the display shown above is the source style on which the style currently being edited was based.

⇛ Press **OK** to return to the preceding display, and select a different style for deletion.

● Style File Load

Not enough memory! Delete an unneeded style?

This message appears when you attempt to load a Style file without there being enough memory to hold the specified file.

Too much data for LISTEN function! Load data.

Some Style Files are too large to be handled by the **LISTEN** feature in the Style File Load function.

● Step Edit

Can't perform this operation on SYSTEM track!

This message appears if you try to record note data or perform a cut, copy, or paste operation on the **SYSTEM** track while editing a song with the Step Edit function.

⇛ Select a different track (1 through 16) and try the operation again.

Invalid data!

This message appears if you try to record an event that either contains invalid data (e.g., a System Exclusive event that is not terminated by an F7) or is located at an inappropriate timing (e.g., a Time Signature event in the middle of a measure).

⇛ Check the parameter settings in the event against the MIDI Data Format, then record the event again.

● Chord Sequence

Save recorded data?

This confirmation message appears if you attempt to exit the Chord Sequence function during recording.

⇛ Press **YES** to store the recorded data. Press **NO** to exit without storing. Press **CANCEL** to return to the Chord Sequence display without storing.

Button not valid! Enter at top of measure.

This message appears when you attempt to enter an accompaniment style or section change at a position other than the beginning of a measure while recording data with the Chord Sequence or Accompaniment Assistance functions.

⇛ Record the style or section change in question at the beginning of the measure.

● Other Record Edit

Write edited data?

This confirmation message appears if you attempt to exit the Initial Edit function without writing the data to disk.

⇛ Press **YES** to save the edited data. Press **NO** to exit without saving. Press **CANCEL** to return to the Initial Edit display without saving.

Save panel settings to disk?

This confirmation prompt appears when you execute the Setup Memory function to save the current panel settings with the song being edited in Song Record mode.

⇛ Select **YES** to save the panel settings. Press **CANCEL** to return to the **RECORD EDIT 2** display without saving.

● Song Copy & Disk Copy

Number of disk exchanges:

This message informs you of the number of times the disks must be exchanged when copying a song to a different disk before starting the song copy operation.

Insert disk 2 (destination disk). (##/##)

Insert the destination disk to be copied.

Destination disk isn't same type (2DD/2HD) as source!

This message appears when you try to copy data from a 2DD disk to a 2HD disk — or vice versa — using the Disk Copy function.

⇛ Press **OK** to cancel the copy operation, then perform the operation again from the beginning. Make sure the destination disk you insert is the same type (2DD or 2HD) as the source disk being copied.

Can't copy to source disk!

This message appears if you insert the source disk when prompted to insert the destination disk while using the Disk Copy function to copy data from one disk to another.

⇛ Press **OK** to cancel the copy operation, then execute the Disk Copy function again from the beginning. When exchanging disks during the copy operation, be careful not to confuse the source and destination disks.

Select destination song number.

When copying a song from the source disk to another disk, this message prompts you to specify the song number in the destination disk to which the song is to be copied, when the disk is first inserted.

Insert disk 1 (source disk). (##/##)

This message prompts you to insert the source disk when copying songs to a second disk.

Incorrect Disk!

This message is displayed if you insert a disk other than the specified disk (source or destination) when prompted to exchange disks while using the Disk Copy function to copy data from one disk to another.

⇛ Press **OK** to cancel the copy operation, then execute the Disk Copy function again from the beginning. When exchanging disks during the copy operation, be careful to insert the correct disk as specified.

Select a different song number!

This message indicates that you have selected the same song number as both the source and the destination when copying a song within a disk.

⇛ Change the destination song number.

● Song Data Conversion

2HD disk not valid! Copy to 2DD disk.

This message appears if a 2HD disk is used when performing conversion of the recorded data.

⇛ Press **OK** and copy the song data to be converted to a 2DD disk, then perform the data conversion using the disk.

Completed! Song No.##

Following conversion of the song data, this message displays the song number to which the data was saved.

● Hardware-related

Host is offline!

This message appears when the host computer is not turned on, the connecting cable is not properly connected, the **HOST SELECT** switch is not in the proper position, or the **MIDI** driver or **MIDI** application is not active.

⇛ Turn off both the Clavinova and the host computer. Check the cable connection and the position of the **HOST SELECT** switch, then turn on the computer first, followed by the Clavinova.

Back up data erased and replaced by factory data.

The Clavinova will retain data protected by the Backup function as long as it is used regularly. If the instrument is not turned on for a week or longer, however, the data may be lost. This message appears when the Clavinova is turned on after data has been lost. It also appears when you recall all factory data.

Hardware error!

The Clavinova has detected a problem in the hardware during the initial system check performed when the power was turned on.

Clean the disk drive!

The disk head is dirty. Clean the disk head using a commercially available head cleaning disk.

YAMAHA [Clavinova] Date :01-MAR-1999
Model CVP-105 MIDI Implementation Chart Version : 1.0

Function...		Transmitted	Recognized	Remarks
Basic	Default	1 - 16	1 - 16	Memorized
Channel	Changed	1 - 16 *1	1 - 16 *2	
Mode	Default	3	3	
	Messages	x	3, 4 (m=1) *3	
	Altered	**********	x	
Note Number	: True voice	0 - 127 **********	0 - 127 0 - 127	
Velocity	Note ON	o 9nH,v=1-127	o 9nH,v=1-127	
	Note OFF	x 9nH,v=0	x	
After Touch	Key's	x	x	
	Ch's	x	o	
Pitch Bend		o	o 0-24 semi	
Control Change	0,32	o	o	Bank Select
	1	x *4	o	Modulation
	5	x	o	Portamento Time
	7,10,11	o	o	
	6,38	o	o	Data Entry
	64,66,67	o	o	
	65	x	o	Portamento
	71-74	x *4	o	Sound Controller
	84	o	o	Portamento Cntrl
	91,93,94	o	o	Effect Depth
	96,97	x	o	RPN Inc,Dec
	98,99	x *4	o	NRPN LSB,MSB
	100,101	o	o	RPN LSB,MSB
Prog Change	: True #	o 0 - 127 **********	o 0 - 127	
System Exclusive		o	o	
Common	: Song Pos.	x	x	
	: Song Sel.	x	x	
	: Tune	x	x	
System Real Time	: Clock	o	o	
	: Commands	o	o	
Aux Mes-sages	: All Sound Off	x	o(120,126,127)	
	: Reset All Cntrls	x	o(121)	
	: Local ON/OFF	x	x	
	: All Notes OFF	x	o(123-125)	
	: Active Sense	o	o	
	: Reset	x	x	
Notes:				

Mode 1 : OMNI ON , POLY Mode 2 : OMNI ON ,MONO o : Yes
Mode 3 : OMNI OFF, POLY Mode 4 : OMNI OFF,MONO x : No

Notes:

*1: The send channel for the RIGHT1, RIGHT2, and LEFT parts can be set using the Send Channel (Keyboard) function. The transmission of accompaniment, harmony, and song data can be turned on or off using the Send Channel (Accompaniment/Harmony) and Song Transmission functions.

*2: Messages received on the channel set by the Remote Keyboard function are handled as operations performed directly on the keyboard or panel. Only the following messages are received on this channel:

- Note On/Off (A-1...C7)
- Control Changes
  - Bank Select MSB/LSB (RIGHT1 part)
  - Modulation
  - Data Entry MSB (when PITCH BEND SENS. is set by RPN LSB/MSB)
  - Volume
  - Expression
  - Sustain
  - Sostenuto
  - Soft Pedal
  - Data Increment/Decrement (when PITCH BEND SENS. is set by RPN LSB/MSB)
  - RPN LSB/MSB (PITCH BEND SENS. only)
  - All Note Off
- Program Change (RIGHT1 part)
- Pitch Bend

*3: “m” is always treated as “1” regardless of its value.

*4: Transmitted when ACMP&RHY or HARMONY setting of Send Channel (Accompaniment/Harmony) function is on.

MIDI DATA FORMAT

Many MIDI messages listed in the MIDI Data Format are expressed in decimal numbers, binary numbers and hexadecimal numbers. Hexadecimal numbers may include the letter “H” as a suffix. Also, “n” can freely be defined as any whole number.
To enter data/values, refer to the table below.

Decimal	Hexadecimal	Binary
0	00	0000 0000
1	01	0000 0001
2	02	0000 0010
3	03	0000 0011
4	04	0000 0100
5	05	0000 0101
6	06	0000 0110
7	07	0000 0111
8	08	0000 1000
9	09	0000 1001
10	0A	0000 1010
11	0B	0000 1011
12	0C	0000 1100
13	0D	0000 1101
14	0E	0000 1110
15	0F	0000 1111
16	10	0001 0000
17	11	0001 0001
18	12	0001 0010
19	13	0001 0011
20	14	0001 0100
21	15	0001 0101
22	16	0001 0110
23	17	0001 0111
24	18	0001 1000
25	19	0001 1001
26	1A	0001 1010
27	1B	0001 1011
28	1C	0001 1100
29	1D	0001 1101
30	1E	0001 1110
31	1F	0001 1111
32	20	0010 0000
33	21	0010 0001
34	22	0010 0010
35	23	0010 0011
36	24	0010 0100
37	25	0010 0101
38	26	0010 0110
39	27	0010 0111
40	28	0010 1000
41	29	0010 1001
42	2A	0010 1010
43	2B	0010 1011
44	2C	0010 1100
45	2D	0010 1101
46	2E	0010 1110
47	2F	0010 1111
48	30	0011 0000
49	31	0011 0001
50	32	0011 0010
51	33	0011 0011
52	34	0011 0100
53	35	0011 0101
54	36	0011 0110
55	37	0011 0111
56	38	0011 1000
57	39	0011 1001
58	3A	0011 1010
59	3B	0011 1011
60	3C	0011 1100
61	3D	0011 1101
62	3E	0011 1110
63	3F	0011 1111

Decimal	Hexadecimal	Binary
64	40	0100 0000
65	41	0100 0001
66	42	0100 0010
67	43	0100 0011
68	44	0100 0100
69	45	0100 0101
70	46	0100 0110
71	47	0100 0111
72	48	0100 1000
73	49	0100 1001
74	4A	0100 1010
75	4B	0100 1011
76	4C	0100 1100
77	4D	0100 1101
78	4E	0100 1110
79	4F	0100 1111
80	50	0101 0000
81	51	0101 0001
82	52	0101 0010
83	53	0101 0011
84	54	0101 0100
85	55	0101 0101
86	56	0101 0110
87	57	0101 0111
88	58	0101 1000
89	59	0101 1001
90	5A	0101 1010
91	5B	0101 1011
92	5C	0101 1100
93	5D	0101 1101
94	5E	0101 1110
95	5F	0101 1111
96	60	0110 0000
97	61	0110 0001
98	62	0110 0010
99	63	0110 0011
100	64	0110 0100
101	65	0110 0101
102	66	0110 0110
103	67	0110 0111
104	68	0110 1000
105	69	0110 1001
106	6A	0110 1010
107	6B	0110 1011
108	6C	0110 1100
109	6D	0110 1101
110	6E	0110 1110
111	6F	0110 1111
112	70	0111 0000
113	71	0111 0001
114	72	0111 0010
115	73	0111 0011
116	74	0111 0100
117	75	0111 0101
118	76	0111 0110
119	77	0111 0111
120	78	0111 1000
121	79	0111 1001
122	7A	0111 1010
123	7B	0111 1011
124	7C	0111 1100
125	7D	0111 1101
126	7E	0111 1110
127	7F	0111 1111

- Except the table above, for example 144-159(decimal)/9nH/1001 0000-1001 1111(binary) displays the Note On Message for each channel (1-16). 176-191/BnH/1011 0000-1011 1111 displays the Control Change Message for each channel (1-16). 192-207/CnH/1100 0000-1100 1111 displays the Program Change Message for each channel (1-16). 240/F0H/1111 0000 denotes the start of a System Exclusive Message. 247/F7H/1111 0111 denotes the end of a System Exclusive Message.
- aaH (hexidecimal)/0aaaaaaa (binary) denotes the data address. The address contains High, Mid, and Low.
- bbH/0bbbbbbb denotes the byte count.
- ccH/0ccccccc denotes the check sum.
- ddH/0ddddddd denotes the data/value.

1. TRANSMIT FLOW

```
MIDI ◄── KEY OFF                  8nH
OUT     KEY ON/OFF                9nH

        CONTROL CHANGE            BnH
        BANK SELECT MSB           BnH,00H
          BANK SELECT LSB         BnH,20H
          DATA ENTRY MSB          BnH,06H
          DATA ENTRY LSB          BnH,26H
          MAIN VOLUME             BnH,07H
          PANPOT                  BnH,0AH
          EXPRESSION              BnH,0BH
          SUSTAIN                 BnH,40H
          SOSTENUTE               BnH,42H
          SOFT PEDAL              BnH,43H
          PORTAMENTO CONTROL      BnH,54H
          REVERB SEND LEVEL       BnH,5BH
          CHORUS SEND LEVEL       BnH,5DH
          VARIATION SEND LEVEL    BnH,5EH
          RPN LSB                 BnH,64H
          RPN MSB                 BnH,65H
          PITCH BEND SENS.        BnH,65H,00H,64H,00H,06H,mmH

        PROGRAM CHANGE            CnH

        SYSTEM EXCLUSIVE MESSAGE
          <YAMAHA MIDI FORMAT>
          <UNIVERSAL>
        UNIVERSAL NON-REALTIME    F0H 7EH.....F7H
          <XG STANDARD>
        XG PARAMETER CHANGE       F0H 43H 1nH 4CH aaH aaH aaH ddH
                                                        .....ddH F7H
        XG BULK DUMP              F0H 43H 0nH 4CH bbH bbH aaH aaH
                                              aaH ddH.....ddH ccH F7H
          <CLAVINOVA MIDI COMPLIANCE>
          <SPECIAL OPERATORS>

        SYSTEM REALTIME MESSAGE
          MIDI CLOCK              F8H
          START                   FAH
          STOP                    FCH
          ACTIVE SENSING          FEH
```

2. RECEIVE FLOW

```
MIDI ◄── KEY OFF                  8nH
IN

        KEY ON/OFF                9nH

        CONTROL CHANGE
          BANK SELECT MSB         BnH,00H
          BANK SELECT LSB         BnH,20H
          MODULATION              BnH,01H
          PORTAMENTO TIME         BnH,05H
          DATA ENTRY MSB          BnH,06H
          DATA ENTRY LSB          BnH,26H
          MAIN VOLUME             BnH,07H
          PANPOT                  BnH,0AH
          EXPRESSION              BnH,0BH
          SUSTAIN                 BnH,40H
          PORTAMENTO              BnH,41H
          SOSTENUTO               BnH,42H
          SOFT PEDAL              BnH,43H
          HARMONIC CONTENT        BnH,47H
          RELEASE TIME            BnH,48H
          ATTACK TIME             BnH,49H
          BRIGHTNESS              BnH,4AH
          PORTAMENTO CONTROL      BnH,54H
          REVERB SEND LEVEL       BnH,5BH
          CHORUS SEND LEVEL       BnH,5DH
          VARIATION SEND LEVEL    BnH,5EH
          DATA INCREMENT          BnH,60H
          DATA DECREMENT          BnH,61H
          NRPN LSB                BnH,62H
          NRPN MSB                BnH,63H
            VIBRATO RATE          BnH,63H,01H,62H,08H,06H,mmH
            VIBRATO DEPTH         BnH,63H,01H,62H,09H,06H,mmH
            VIBRATO DELAY         BnH,63H,01H,62H,0AH,06H,mmH
            FILTER CUTOFF FREQ.   BnH,63H,01H,62H,20H,06H,mmH
            FILTER RESONANCE      BnH,63H,01H,62H,21H,06H,mmH
            EG ATTACK TIME        BnH,63H,01H,62H,63H,06H,mmH
            EG DECAY TIME         BnH,63H,01H,62H,64H,06H,mmH
            EG RELEASE            BnH,63H,01H,62H,66H,06H,mmH
            DRUM INST                                        *1
              CUTOFF FREQ.        BnH,63H,14H,62H,rrH,06H,mmH
              FILTER RESONANCE    BnH,63H,15H,62H,rrH,06H,mmH
              EG ATTACK RATE      BnH,63H,16H,62H,rrH,06H,mmH
              EG DECAY RATE       BnH,63H,17H,62H,rrH,06H,mmH
              PITCH COARSE        BnH,63H,18H,62H,rrH,06H,mmH
              PITCH FINE          BnH,63H,19H,62H,rrH,06H,mmH
              LEVEL               BnH,63H,1AH,62H,rrH,06H,mmH
              PANPOT              BnH,63H,1CH,62H,rrH,06H,mmH
              REVERB SEND         BnH,63H,1DH,62H,rrH,06H,mmH
```

```
      CHORUS SEND          BnH,63H,1EH,62H,rrH,06H,mmH
      VARIATION SEND       BnH,63H,1FH,62H,rrH,06H,mmH
    RPN LSB                BnH,64H
    RPN MSB                BnH,65H
      PITCH BEND SENS.     BnH,65H,00H,64H,00H,06H,mmH
      FINE TUNING          BnH,65H,00H,64H,01H,06H,mmH,
                                                  26H,llH
      COARSE TUNING        BnH,65H,00H,64H,02H,06H,mmH
      NULL                 BnH,65H,7FH,64H,7FH
    ALL SOUND OFF          BnH,78H,00H
    RESET ALL CONTROLLERS  BnH,79H,00H
    ALL NOTES OFF          BnH,7BH,00H
    OMNI OFF               BnH,7CH,00H
    OMNI ON                BnH,7DH,00H
    MONO                   BnH,7EH
    POLY                   BnH,7FH

├─ PROGRAM CHANGE          CnH

├─ CHANNEL AFTER TOUCH     DnH

└─ PITCH BEND CHANGE       EnH

┌─ SYSTEM EXCLUSIVE MESSAGE
│    <YAMAHA MIDI FORMAT>
│    <UNIVERSAL>
├─ UNIVERSAL REALTIME      F0H 7FH.....F7H
├─ UNIVERSAL NON-REALTIME  F0H 7EH.....F7H
│    <XG STANDARD>         F0H 43H 1nH 4CH aaH aaH aaH ddH
├─ XG PARAMETER CHANGE                        .....ddH F7H
│                          F0H 43H 0nH 4CH bbH bbH aaH aaH
├─ XG BULK DUMP                  aaH ddH.....ddH ccH F7H
│                          F0H 43H 3nH 4CH aaH aaH aaH F7H
├─ PARAMETER REQUEST       F0H 43H 2nH 4CH aaH aaH aaH F7H
└─ DUMP REQUEST
    <CLAVINOVA MIDI COMPLIANCE>
    <SPETIAL OPERATORS>
    <Others>

└─ SYSTEM REALTIME MESSAGE
    MIDI CLOCK             F8H
    START                  FAH
    STOP                   FCH
    ACTIVE SENSING         FEH
```

3. TRANSMIT/RECEIVE DATA

3-1 CHANNEL VOICE MESSAGES

3-1-1 KEY OFF

```
STATUS          1000nnnn(8nH)   n = 0 - 15 VOICE CHANNEL NUMBER
NOTE NUMBER     0kkkkkkk        k = 0 (C-2) - 127 (G8)
VELOCITY        0vvvvvvv        v: ignored
```

3-1-2 KEY ON/OFF

```
STATUS          1001nnnn(9nH)   n = 0 - 15 VOICE CHANNEL NUMBER
NOTE NUMBER     0kkkkkkk        k = 0 (C-2) - 127 (G8)
VELOCITY        0vvvvvvv        (v ≠ 0) NOTE ON
                00000000        (v = 0) NOTE OFF
```

3-1-3 PROGRAM CHANGE

```
STATUS          1100nnnn(CnH)   n = 0 - 15 VOICE CHANNEL NUMBER
PROGRAM NUMBER  0ppppppp        p = 0 - 127
```

*** PROGRAM NUMBER: XG DRUM VOICE number correspondence**

```
P = 0    Standard Kit
P = 1    Standard2 Kit
P = 8    Room Kit
P = 16   Rock Kit
P = 24   Electro Kit
P = 25   Analog Kit
P = 27   Dance Kit
P = 32   Jazz Kit
P = 40   Brush Kit
P = 48   Classic Kit
```

*** PROGRAM NUMBER: XG SFX KIT number correspondence**

```
P = 0    SFX1 Kit
P = 1    SFX2 Kit
```

When DRUM VOICE is selected and program change data for a different DRUM VOICE is received, the currently selected DRUM VOICE will be replaced with the new DRUM VOICE.

3-1-4 CHANNEL AFTER TOUCH (Receive only)

```
STATUS          1101nnnn(DnH)   n = 0 - 15 VOICE CHANNEL NUMBER
VALUE           0vvvvvvv        v = 0 - 127 AFTER TOUCH VALUE
```

3-1-5 PITCH BEND CHANGE

```
STATUS          1110nnnn(EnH)   n = 0 - 15 VOICE CHANNEL NUMBER
LSB             0vvvvvvv        PITCH BEND CHANGE LSB
MSB             0vvvvvvv        PITCH BEND CHANGE MSB
```

3-1-6 CONTROL CHANGE

```
STATUS1011nnnn(BnH)             n = 0 - 15 VOICE CHANNEL NUMBER
CONTROL NUMBER      0ccccccc
CONTROL VALUE       0vvvvvvv
```

*** Transmit CONTROL NUMBER.**

```
c = 0     BANK SELECT MSB      ; v = 0:XG NORMAL,
                                     64:SFX NORMAL,
                                     126:XG SFX KIT,
                                     127:XG DRUM
c = 32    BANK SELECT LSB      ; v = 0 - 127
c =  6    DATA ENTRY MSB       ; v = 0 - 127                 *1
c = 38    DATA ENTRY LSB       ; v = 0 - 127                 *1
c =  7    MAIN VOLUME          ; v = 0 - 127
c = 10    PANPOT               ; v = 0 - 127
c = 11    EXPRESSION           ; v = 0 - 127
c = 64    SUSTAIN              ; v = 0-63:OFF , 64-127:ON    *2
c = 66    SOSTENUTO            ; v = 0-63:OFF , 64-127:ON    *2
c = 67    SOFT PEDAL           ; v = 0-63:OFF , 64-127:ON    *2
c = 84    PORTAMENTO CONTROL   ; v = 0 - 127
c = 91    REVERB SEND LEVEL    ; v = 0 - 127
c = 93    CHORUS SEND LEVEL    ; v = 0 - 127
c = 94    VARIATION SEND LEVEL ; v = 0 - 127
                                 (When only Connection = 1[System])
c = 100   RPN LSB              ; v = 0 - 127
c = 101   RPN MSB              ; v = 0 - 127
```

*** Receive CONTROL NUMBER.**

```
c =  0    BANK SELECT MSB      ; v = 0:XG NORMAL,
                                     64:SFX NORMAL,
                                     126:XG SFX KIT,
                                     127:XG DRUM
c = 32    BANK SELECT LSB      ; v = 0 - 127
c =  1    MODULATION           ; v = 0 - 127                 *2
c =  5    PORTAMENTO TIME      ; v = 0 - 127                 *2
c =  6    DATA ENTRY MSB       ; v = 0 - 127                 *1
c = 38    DATA ENTRY LSB       ; v = 0 - 127                 *1
c =  7    MAIN VOLUME          ; v = 0 - 127
c = 10    PANPOT               ; v = 0 - 127
c = 11    EXPRESSION           ; v = 0 - 127
c = 64    SUSTAIN              ; v = 0-63:OFF , 64-127:ON    *2
c = 65    PORTAMENTO           ; v = 0-63:OFF , 64-127:ON    *2
c = 66    SOSTENUTO            ; v = 0-63:OFF , 64-127:ON    *2
c = 67    SOFT PEDAL           ; v = 0-63:OFF , 64-127:ON    *2
c = 71    HARMONIC CONTENT     ; v = 0:-64 - 64:0 - 127:+63  *2
c = 72    RELEASE TIME         ; v = 0:-64 - 64:0 - 127:+63  *2
c = 73    ATTACK TIME          ; v = 0:-64 - 64:0 - 127:+63  *2
c = 74    BRIGHTNESS           ; v = 0:-64 - 64:0 - 127:+63  *2
c = 84    PORTAMENT CONTROL    ; v = 0 - 127                 *2
c = 91    REVERB SEND LEVEL    ; v = 0 - 127
c = 93    CHORUS SEND LEVEL    ; v = 0 - 127
c = 94    VARIATION SEND LEVEL ; v = 0 - 127
                                 (When only Connection = 1[System])
c = 96    DATA INCREMENT       ; v = 0 - 127                 *1
c = 97    DATA DECREMENT       ; v = 0 - 127                 *1
          RPN MSB/LSB, NRPN MSB/LSB
```

*1 Only when setting the appointed parameter with RPN, NRPN.
*2 Does not effect Rhythm Voice.

- Until a PROGRAM CHANGE message is received, the BANK SELECT operation will be suspended. When a Voice, including VOICE BANK, is changed, set the BANK SELECT and Program Change Message, and transmit in the following order, BANK SELECT MSB, LSB, PROGRAM CHANGE.

- MODULATION controls the Vibrato Depth.

- PORTAMENTO TIME controls the Pitch Change Speed when the Portamento Switch = ON. 0 being the shortest time, and 127 being the longest.

- PANPOT changes the value for the melody voice and rhythm voice in relation to the preset value.

- Portamento time is fixed to 0 when the PORTAMENTO CONTROL is used.

- HARMONIC CONTENT applies adjustment to the resonance value that is set by the voice. This parameter specifies relative change with the value of 64 producing 0 adjustment. As values get higher the sound becomes increasingly eccentric. Note that for some voices the effective parameter range is narrower than the legal parameter range.

- RELEASE TIME applies adjustment to the envelope release time set by the voice. This parameter specifies relative change with the value of 64 producing 0 adjustment.

- ATTACK TIME applies adjustment to the envelope attack time set by the voice. This parameter specifies relative change with the value of 64 producing 0 adjustment.

- BRIGHTNESS applies adjustment to the cut-off frequency set by the voice. This parameter specifies relative change with the value of 64 producing 0 adjustment. Lower voices produce a softer sound. For some voices the effective parameter range is narrower than the legal parameter range.

3-2 CHANNEL MODE MESSAGES

```
STATUS          1011nnnn(BnH)   n = 0 - 15 VOICE CHANNEL NUMBER
CONTROL NUMBER  0ccccccc        c = CONTROL NUMBER
CONTROL VALUE   0vvvvvvv        v = DATA VALUE
```

3-2-1 ALL SOUND OFF (Receive only)
(CONTROL NUMBER = 78H , DATA VALUE = 0)

Switches off all sound from the channel. Does not reset Note On and Hold On conditions established by Channel Messages.

3-2-2 RESET ALL CONTROLLERS (Receive only)
(CONTROL NUMBER = 79H , DATA VALUE = 0)

Resets controllers as follows.

```
PITCH BEND CHANGE    0 (Center)
AFTER TOUCH          0 (min.)
MODULATION           0 (min.)
EXPRESSION           127 (max.)
SUSTAIN              0 (off)
SOSTENUTO            0 (off)
SOFT PEDAL           0 (off)
NRPN                 Sets number to null. (Internal data remains unchanged)
RPN                  Sets number to null. (Internal data remains unchanged)
PORTAMENT CONTROL    Resets portamento source note number
PORTAMENTO           0 (off)
```

3-2-3 ALL NOTES OFF (Receive only)
(CONTROL NUMBER = 7BH , DATA VALUE = 0)

Switches off all of the channel's "on" notes. However, any notes being held by SUSTAIN or SOSTENUTO continue to sound until SUSTAIN/SOSTENUTO goes off.

3-2-4 OMNI OFF (Receive only)
(CONTROL NUMBER = 7CH , DATA VALUE = 0)

Same processing as for All Notes Off.

3-2-5 OMNI ON (Receive only)
(CONTROL NUMBER = 7DH , DATA VALUE = 0)

Same processing as for All Notes Off. Omni On is not executed.

3-2-6 MONO (Receive only)
(CONTROL NUMBER = 7EH , DATA VALUE = 0)

Same processing as for All Notes Off. If the 3rd byte is in a range of 0-16 the corresponding channel will be changed to Mode 4 (m=1).

3-2-7 POLY (Receive only)
(CONTROL NUMBER = 7FH , DATA VALUE = 0)

Same processing as for All Sounds Off and the corresponding channel will be changed to Mode 3.

3-3 REGISTERED PARAMETER NUMBER(RPN)

```
STATUS          1011nnnn(BnH)  n = 0 - 15 VOICE CHANNEL NUMBER
RPN LSB         01100100(64H)
RPN LSB NUMBER  0ppppppp       p = RPN LSB (refer to the list below)
RPN MSB         01100101(65H)
RPN MSB NUMBER  0qqqqqqq       q = RPN MSB (refer to the list below)
DATA ENTRY MSB  00000110(06H)
DATA VALUE      0mmmmmmm       m = Data Value
DATA ENTRY LSB  00100110(26H)
DATA VALUE      0lllllll       l = Data Value
```

First appoints the parameter for RPN MSB/LSB, then sets the parameter value for data entry MSB/LSB.

```
RPN     D.ENTRY
LSB MSB MSB LSB PARAMETER  NAME          DATA RANGE
00H 00H mmH -   PITCH BEND SENSITIVITY  00H-18H (0 - 24 semitones)
01H 00H mmH llH FINE TUNE       {mmH,llH} = {00H,00H}-{40H,00H}-{7FH,7FH}
                                  (-8192*100/8192) - 0 - (+8192*100/8192)
02H 00H mmH -   COARSE TUNE      28H - 40H - 58H (-24 - 0 - +24 semitones)
7FH 7FH -   -   NULL
```

Clears the current RPN number setting. Does not change the internal parameter settings.

3-4 NON-REGISTERED PARAMETER NUMBER(NRPN) (Receive only)

```
STATUS          1011nnnn(BnH)  n = 0 - 15 VOICE CHANNEL NUMBER
NRPN LSB        01100010(62H)
NRPN LSB NUMBER 0ppppppp       p = NRPN LSB (refer to the list below)
NRPN MSB        01100011(63H)
NRPN MSB NUMBER 0qqqqqqq       q = NRPN MSB (refer to the list below)
DATA ENTRY MSB  00000110(06H)
DATA VALUE      0mmmmmmm       m = Data Value
```

First appoints the parameter for NRPN MSB/LSB, then sets the parameter value for data entry MSB/LSB.

```
NRPN    D.ENTRY
MSB LSB MSB LSB PARAMETER NAME        DATA RANGE
01H 08H mmH —   VIBRATO RATE         00H - 40H - 7FH (-64 - 0 - +63)
01H 09H mmH —   VIBRATO DEPTH        00H - 40H - 7FH (-64 - 0 - +63)
01H 0AH mmH —   VIBRATO DELAY        00H - 40H - 7FH (-64 - 0 - +63)
01H 20H mmH —   FILTER CUTOFF FREQUENCY 00H - 40H - 7FH (-64 - 0 - +63)
01H 21H mmH —   FILTER RESONANCE     00H - 40H - 7FH (-64 - 0 - +63)
01H 63H mmH —   EG ATTACK TIME       00H - 40H - 7FH (-64 - 0 - +63)
01H 64H mmH —   EG DECAY TIME        00H - 40H - 7FH (-64 - 0 - +63)
01H 66H mmH —   EG RELEASE           00H - 40H - 7FH (-64 - 0 - +63)
14H rrH mmH —   DRUM FILTER CUTOFF FREQ. 00H - 40H - 7FH (-64 - 0 - +63)
15H rrH mmH —   DRUM FILTER RESONANCE 00H - 40H - 7FH (-64 - 0 - +63)
16H rrH mmH —   DRUM AEG ATTACK RATE  00H - 40H - 7FH (-64 - 0 - +63)
17H rrH mmH —   DRUM AEG DECAY RATE   00H - 40H - 7FH (-64 - 0 - +63)
18H rrH mmH —   DRUM PITCH COARSE     00H - 40H - 7FH (-64 - 0 - +63)
19H rrH mmH —   DRUM PITCH FINE       00H - 40H - 7FH (-64 - 0 - +63)
1AH rrH mmH —   DRUM LEVEL            00H - 7FH (0 - max.)
1CH rrH mmH —   DRUM PANPOT           00H   ,01H  - 40H   - 7FH
                                      (random,left - center - right)
1DH rrH mmH —   DRUM REVERB SEND LEVEL  00H - 7FH (0 - max.)
1EH rrH mmH —   DRUM CHORUS SEND LEVEL  00H - 7FH (0 - max.)
1FH rrH mmH —   DRUM VARIATION SEND LEVEL 00H - 7FH (0 - max.)
```

The MSB 14H-1FH (for drums) message is received when multi-part parameters PART MODE = DRUMS1...2.
rrH : drum instrument note number

3-5 SYSTEM REALTIME MESSAGES

3-5-1 MIDI CLOCK

```
STATUS      11111000 (F8H)
```

Transmission: 96 clocks per measure are transmitted.
Reception: If the instrument's clock is set to external, after FAH is received from the external device the instrument's clock will sync with the 96 beats per measure received from the external device.
Decides whether the internal clock, or Timing Clocks received via the MIDI IN will be used.

3-5-2 START

```
STATUS      11111010 (FAH)
```

Transmission: Transmitted when instrument's Rhythm or Song playback is started.
Reception: Depending upon the condition, Rhythm, Song Playback, or Song Rec will start.

3-5-3 STOP

```
STATUS      11111100 (FCH)
```

Transmission: Transmitted when instrument's Rhythm or Song playback is stopped.
Reception: Depending upon the condition, Rhythm, Song Playback, or Song Rec will stop.

3-5-4 ACTIVE SENSING

```
STATUS      11111110 (FEH)
```

Transmission: Transmitted approximately once every 200msec.
Reception: Sensing is started once this Code is received. If Status or Data is not received within 400ms, the MIDI Receive Buffer will be cleared, and all notes, including those being sustained, will be cut OFF. Also, all control values will be reset to their factory defaults.

3-6 SYSTEM EXCLUSIVE MESSAGE

3-6-1 YAMAHA MIDI FORMAT

3-6-1-1 SECTION CONTROL

binary	hexadecimal	
11110000	F0	Exclusive status
01000011	43	YAMAHA ID
01111110	7E	Style
00000000	00	
0sssssss	SS	Switch No.
		00H : INTRO A
		01H : INTRO B
		02H : INTRO C/D
		03H~07H : INTRO C/D
		08H : MAIN A
		09H : MAIN B
		0AH : MAIN C
		0BH~0FH : MAIN D
		10H : FILL IN A
		11H : FILL IN B
		12H : FILL IN C
		13H~17H : FILL IN D
		18H : BREAK FILL
		19H : BREAK FILL
		1AH : BREAK FILL
		1BH~1FH : BREAK FILL
		20H : ENDING A
		21H : ENDING B
		22H : ENDING C/D
		23H~27H : ENDING C/D
0ddddddd	DD	Switch On/Off: 00H(Off),7FH(On)
11110111	F7	End of Exclusive

When an ON code is received, the appointed section will be changed.

3-6-1-2 TEMPO CONTROL

binary	hexadecimal	
11110000	F0	Exclusive status
01000011	43	YAMAHA ID
01111110	7E	Style
00000000	01	
0ttttttt	TT	Tempo4
0ttttttt	TT	Tempo3
0ttttttt	TT	Tempo2
0ttttttt	TT	Tempo1
11110111	F7	End of Exclusive

The internal clock will be set to the received Tempo value.
Tempo Meta Event is a large data block (24-bit), it is divided into 4 groups with 7-bits going into each of the Tempos 1-4 (4 receives the remaining 3 bits).

3-6-1-3 CHORD CONTROL type1

binary	hexadecimal	
11110000	F0	Exclusive status
01000011	43	YAMAHA ID
01111110	7E	Style
00000010	02	type 1
0ddddddd	dd	chord root(cr)
0ddddddd	dd	chord type(ct)
0ddddddd	dd	bass note(bn)
0ddddddd	dd	bass type(bt)
11111110	F7	End of Exclusive

Chord transmit: Transmitted using type 1 format.

cr Chord Root 0kkknnnn (kkk:Change symbol, nnnn:Note)

Binary	Hex	Change symbol	Binary	Hex	Note
0000nnnn	0n	bbb(3 flats)	0kkk0000	k0	reserved
0001nnnn	1n	bb (2 flats)	0kkk0001	k1	C
0010nnnn	2n	b (1 flat)	0kkk0010	k2	D
0011nnnn	3n	natural	0kkk0011	k3	E
0100nnnn	4n	# (1 sharp)	0kkk0100	k4	F
0101nnnn	5n	## (2 sharps)	0kkk0101	k5	G
0110nnnn	6n	###(3 sharps)	0kkk0110	k6	A
			0kkk0111	k7	B

ct Chord Type 0 - 34,127

Binary	Hex	Dec	Chord type	Binary	Hex	Dec	Chord type
00000000	00	0	Maj	00010010	12	18	dim7
00000001	01	1	Maj6	00010011	13	19	7th
00000010	02	2	Maj7	00010100	14	20	7sus4
00000011	03	3	Maj7(#11)	00010101	15	21	7b5
00000100	04	4	Maj(9)	00010110	16	22	7(9)
00000101	05	5	Maj7(9)	00010111	17	23	7(#11)
00000110	06	6	Maj6(9)	00011000	18	24	7(13)
00000111	07	7	aug	00011001	19	25	7(b9)
00001000	08	8	min	00011010	1A	26	7(b13)
00001001	09	9	min6	00011011	1B	27	7(#9)
00001010	0A	10	min7	00011100	1C	28	Maj7aug
00001011	0B	11	min7b5	00011101	1D	29	7aug
00001100	0C	12	min(9)	00011110	1E	30	1+8
00001101	0D	13	min7(9)	00011111	1F	31	1+5
00001110	0E	14	min7(11)	00100000	20	32	sus4
00001111	0F	15	minMaj7	00100001	21	33	1+2+5
00010000	10	16	minMaj7(9)	00100010	22	34	cc
00010001	11	17	dim				

bn	On Bass Note	Same as Chord root, 127:No bass chord
bt	Bass Chord	Same as Chord type 127:No bass chord

3-6-2 UNIVERSAL SYSTEM EXCLUSIVE

3-6-2-1 UNIVERSAL REALTIME MESSAGE

3-6-2-1-1 MIDI MASTER VOLUME (Receive only)

binary	hexadecimal	
11110000	F0	Exclusive status
01111110	7F	Universal Realtime
01111111	7F	ID of target Device
00001001	04	Sub-ID #1=Device Control Message
00000001	01	Sub-ID #2=Master Volume
0sssssss	SS	Volume LSB
0ttttttt	TT	Volume MSB
11110111	F7	End of Exclusive
or		
11110000	F0	Exclusive status
01111110	7F	Universal Realtime
0xxxnnnn	XN	When N is received N=0-F, whichever is received. When N is transmitted N always=0. X = don't care
00001001	04	Sub-ID #1=Device Control Message
00000001	01	Sub-ID #2=Master Volume
0sssssss	SS	Volume LSB
0ttttttt	TT	Volume MSB
11110111	F7	End of Exclusive

The volume for all channels will be changed simultaneously.
The TT value is used as the MIDI Master Volume value. (the SS value is ignored.)

3-6-2-2 UNIVERSAL NON REALTIME MESSAGE

3-6-2-2-1 GENERAL MIDI SYSTEM ON

binary	hexadecimal	
11110000	F0	Exclusive status
01111110	7E	Universal Non-Realtime
01111111	7F	ID of target Device
00001001	09	Sub-ID #1=General MIDI Message
00000001	01	Sub-ID #2=General MIDI On
11110111	F7	End of Exclusive
or		
11110000	F0	Exclusive status
01111110	7E	Universal Non-Realtime
0xxxnnnn	XN	When N is received N=0-F, whichever is received. When N is transmitted N always=0. X = don't care
00001001	09	Sub-ID #1=General MIDI Message
00000001	01	Sub-ID #2=General MIDI On
11110111	F7	End of Exclusive

Depending upon the received ON message, the System Mode will be changed to XG.
Except MIDI Master Tuning, all control data be reset to default values.
This message requires approximately 50ms to execute, so sufficient time should be allowed before the next message is sent.

After the GM System ON message is received, message reception of the following will be limited.

- Bank Select MSB-LSB in channel 10 will be ignored and the drum voice will be fixed.
- Bank Select MSB-LSB except in channel 10 will be ignored except 127/0.
- NRPN is not received.

When XG SYSTEM ON is received, these restrictions will be cancelled.

3-6-3 XG STANDARD

3-6-3-1 XG PARAMETER CHANGE

3-6-3-1-1 XG SYSTEM ON

binary	hexadecimal	
11110000	F0	Exclusive status
01000011	43	YAMAHA ID
0001nnnn	1N	Device Number
01001100	4C	Model ID
00000000	00	Address High
00000000	00	Address Mid
01111110	7E	Address Low
00000000	00	Data
11110111	F7	End of Exclusive

Depending upon the received ON message, the SYSTEM MODE will be changed to XG.Controllers will be reset, all values of Multi Part and Effect, and All System values denoted by “XG” data within All System will be reset to default values in the table.
This message requires approximately 50ms to execute, so sufficient time should be allowed before the next message is sent.

3-6-3-1-2 XG PARMETER CHANGE

binary	hexadecimal	
11110000	F0	Exclusive status
01000011	43	YAMAHA ID
0001nnnn	1N	Device Number
01001100	4C	Model ID
0aaaaaaa	AA	Address High
0aaaaaaa	AA	Address Mid
0aaaaaaa	AA	Address Low
0ddddddd	DD	Data
|	|	
11110111	F7	End of Exclusive

For parameters with data size of 2 or 4, transmit the appropriate number of data bytes.
For more information on Address and Parameters, refer to < Table 1-2 > and < Table 1-4 > ~ < Table 1-6 >.

The following Parameter Changes are handled.

XG System Data
Multi Effect 1 Data
Multi Part Data
Drums Setup Data

3-6-3-2 XG BULK DUMP

binary	hexadecimal	
11110000	F0	Exclusive status
01000011	43	YAMAHA ID
0000nnnn	0N	Device Number
01001100	4C	Model ID
0bbbbbbb	BB	ByteCount
0bbbbbbb	BB	ByteCount
0aaaaaaa	AA	Address High
0aaaaaaa	AA	Address Mid
0aaaaaaa	AA	Address Low
0ddddddd	DD	Data
|	|	
0ccccccc	CC	Check sum
11110111	F7	End of Exclusive

For more information on Address and Byte Count, refer to < Table 1-2 > ~ < Table 1-6 >.
The Check Sum value is set such that the sum of Byte Count, Address, Data, and Check Sum has value zero in its seven least significant bits.
If the top of the block is appointed to the Address the XG Bulk Dump, Bulk Request will be received.
The Block is a unit that consists of the data, arranged in the list, as the Total Size.

The following Bulk Dumps are handled.

XG System Data
Multi Effect 1 Data(Individual effect unit)
Multi Part Data(Individual part unit)
Drums Setup Data(Individual note unit)
System Information(Transmit only)

3-6-3-3 XG PARAMETER REQUEST (Receive only)

binary	hexadecimal	
11110000	F0	Exclusive status
01000011	43	YAMAHA ID
0011nnnn	3n	Device Number
01001100	4C	Model ID
0aaaaaaa	AA	Address High
0aaaaaaa	AA	Address Mid
0aaaaaaa	AA	Address Low
11110111	F7	End of Exclusive

For more information on Address and Byte Count refer to < Table 1-2 > and < Table 1-4 > ~ < Table 1-6 > .

The following Parameter Requests are handled.

XG System Data
Multi Effect 1 Data
Multi Part Data
Drums Setup Data

3-6-3-4 XG DUMP REQUEST (Receive only)

binary	hexadecimal	
11110000	F0	Exclusive status
01000011	43	YAMAHA ID
0010nnnn	2n	Device Number
01001100	4C	Model ID
0aaaaaaa	AA	Address High
0aaaaaaa	AA	Address Mid
0aaaaaaa	AA	Address Low
11110111	F7	End of Exclusive

For more information on Address and Byte Count refer to < Table 1-2 > ~ < Table 1-6 >.

The following Dump Requests are handled.

XG System Data
Multi Effect 1 Data(Individual module unit)
Multi Part Data(Individual part unit)
Drums Setup Data(Individual note unit)
System Information

3-6-4 CLAVINOVA MIDI COMPLIANCE

3-6-4-1 INTERNAL CLOCK / EXTERNAL CLOCK (Receive only)

binary	hexadecimal	
11110000	F0	Exclusive status
01000011	43	YAMAHA ID
01110011	73	Clavinova ID
00000001	01	Clavinova common ID
0000001n	0N	N: 2(Internal Clock),3(External Clock)
11110111	F7	End of Exclusive

3-6-4-2 DOC MULTI TIMBRE ON / OFF (Receive only)

binary	hexadecimal	
11110000	F0	Exclusive status
01000011	43	YAMAHA ID
01110011	73	Clavinova ID
00000001	01	Clavinova commmon ID
00000110	1N	N:3(DOC Multi Timbre Off),4(DOC Multi Timbre On)
11110111	F7	End of Exclusive

3-6-4-3 PANEL LED ON / OFF (Receive only)

binary	hexadecimal	
11110000	F0	Exclusive status
01000011	43	YAMAHA ID
01110011	73	Clavinova ID
00000001	01	Clavinova commmon ID
00011010	1A	PANEL LED On/Off
0mmmmmmm	MM	MM:00H(LED Off),01H(LED On),02H(The LED flashes) 03H (LED All off), 04H (Panel LED returns to normal operation)
00000000	00	
0nnnnnnn	NN	LED No.
11110111	F7	End of Exclusive

Remotely switches the Panel LED On/Off.

3-6-4-4 PANEL VOICE SETTING (Receive only)

binary	hexadecimal	
11110000	F0	Exclusive status
01000011	43	YAMAHA ID
01110011	73	Clavinova ID
01000101	01	Clavinova common ID
00100010	22	Piano Live Exclusive Substatus
00000000	00	Panel Voice Setting Substatus
0000nnnn	0n	Panel Part No. 00H (RIGHT 1) 01H (RIGHT 2) 02H (LEFT)
0mmmmmmm	mm	Bank Select MSB
0lllllll	ll	Bank Select LSB
0ppppppp	pp	Program Change
11110111	F7	End of Exclusive

3-6-4-5 PANEL VOICE VOLUME SETTING (Receive only)

binary	hexadecimal	
11110000	F0	Exclusive status
01000011	43	YAMAHA ID
01110011	73	Clavinova ID
01000101	01	Clavinova common ID
00100010	22	Piano Live Exclusive Substatus
00000001	01	Panel Voice Volume Setting Substatus
0000nnnn	0n	Panel Part No. 00H (RIGHT 1) 01H (RIGHT 2) 02H (LEFT)
0vvvvvvv	vv	Value (0 - 7FH)
11110111	F7	End of Exclusive

3-6-4-6 PANEL VOICE REVERB DEPTH SETTING (Receive only)

binary	hexadecimal	
11110000	F0	Exclusive status
01000011	43	YAMAHA ID
01110011	73	Clavinova ID
01000101	01	Clavinova common ID
00100010	22	Piano Live Exclusive Substatus
00000010	02	Panel Voice Reverb Depth Setting Substatus
0000nnnn	0n	Panel Part No. 00H (RIGHT 1) 01H (RIGHT 2) 02H (LEFT)
0vvvvvvv	vv	Value (0 - 7FH)
11110111	F7	End of Exclusive

3-6-4-7 PANEL VOICE EFFECT DEPTH SETTING (Receive only)

binary	hexadecimal	
11110000	F0	Exclusive status
01000011	43	YAMAHA ID
01110011	73	Clavinova ID
01000101	01	Clavinova common ID
00100010	22	Piano Live Exclusive Substatus
00000011	03	Panel Voice Effect Depth Setting Substatus
0000nnnn	0n	Panel Part No. 00H (RIGHT 1) 01H (RIGHT 2) 02H (LEFT)
0vvvvvvv	vv	Value (0 - 7FH)
11110111	F7	End of Exclusive

3-6-4-8 MIDI FA CANCEL (Receive only)

binary	hexadecimal	
11110000	F0	Exclusive status
01000011	43	YAMAHA ID
01110011	73	Clavinova ID
01000101	01	Clavinova common ID
01100001	61	MIDI FA Cancel
11110111	F7	End of Exclusive

If this message is received, even if FAH is received the Rhythm will not start.

3-6-5 SPECIAL OPERATORS

3-6-5-1 SPLIT POINT

binary	hexadecimal	
11110000	F0	Exclusive status
01000011	43	YAMAHA ID
01110011	73	Clavinova ID
01000101	01	Clavinova common ID
00010001	11	Sub ID
00000000	00	
00010100	14	Split Point
0ddddddd	DD	Split Key No.
11110111	F7	End of Exclusive

3-6-5-2 STYLE NUMBER

binary	hexadecimal	
11110000	F0	Exclusive status
01000011	43	YAMAHA ID
01110011	73	Clavinova ID
01011010	5E	CVP-103 ID
00010001	11	Sub ID
00000000	00	Channel No. (always 00)
00010110	16	Style No. Control No.
0mmmmmmm	mm	Style No. MSB
0lllllll	ll	Style No. LSB
11110111	F7	End of Exclusive

3-6-5-3 FINGERING

binary	hexadecimal	
11110000	F0	Exclusive status
01000011	43	YAMAHA ID
01110011	73	Clavinova ID
01000101	01	Clavinova common ID
00010001	11	Sub ID
00000000	00	
01000000	40	Fingering
0000dddd	0D	0D: 00H(Off),01H(Single Finger), 02H(Fingered 1),03H(Fingered 2), 04H(Full Keyboard),07H(Multi Finger)
11110111	F7	End of Exclusive

3-6-5-4 ACCOMP VOLUME

bbinary	hexadecimal	
11110000	F0	Exclusive status
01000011	43	YAMAHA ID
01110011	73	Clavinova ID
01000101	01	Clavinova common ID
00010001	11	Sub ID
0000nnnn	0N	Part: 00H(All Part),05H(Rhythm),0AH(Bass), 06H(Chord),0DH(Pad),07H(Phrase)
01000000	42	Accomp Volume
0ddddddd	DD	Volume Data: 00H~7FH
11110111	F7	End of Exclusive

3-6-5-5 CHANNEL DETUNE

binary	hexadecimal	
11110000	F0	Exclusive status
01000011	43	YAMAHA ID
01110011	73	Clavinova ID
01000101	01	Clavinova common ID
00010001	11	Sub ID
0000nnnn	0N	N = MIDI Channel
01000011	43	Dual Detune
0vvvvvvv	VV	Value VV: 00H - 40H - 7FH (-64 - 0 - +63)
11110111	F7	End of Exclusive

The Channel Detune message only affects the specified channel.

3-6-5-6 VOLUME ,EXPRESSION AND PAN REALTIME CONTROL OFF

binary	hexadecimal	
11110000	F0	Exclusive status
01000011	43	YAMAHA ID
01110011	73	Clavinova ID
01000101	01	Clavinova common ID
00010001	11	Sub ID
0000nnnn	0N	N = MIDI Channel
01001001	45	Volume and Expression Realtime Control Off
0vvvvvvv	VV	Value VV: off=7FH, on=00H
11110111	F7	End of Exclusive

When “On” is received, subsequent volume, expression, and PAN changes are only valid after the reception of the next key on. Normal operation resumes when “Off” is received.

3-6-5-7 MIDI KEY LED MODE ON / OFF (Receive only)

binary	hexadecimal	
11110000	F0	Exclusive status
01000011	43	YAMAHA ID
01110011	73	Clavinova ID
01000101	01	Clavinova common ID
00010001	11	Sub ID
0000nnnn	0N	N = MIDI Channel
01000111	47	MIDI Key LED Mode On / Off
0ddddddd	DD	DD: 00H(Key LED Mode Off), 01H(Key LED Mode On + no tone), 02H(Key LED Mode On + tone)
11110111	F7	End of Exclusive

3-6-6 Others

3-6-6-1 MIDI MASTER TUNING (Receive only)

binary	hexadecimal	
11110000	F0	Exclusive status
01000011	43	YAMAHA ID
0001nnnn	1N	When N is received N=0-F, whichever is received.
00100111	27	Model ID
00110000	30	Sub ID
00000000	00	
00000000	00	
0mmmmmmm	MM	Master Tune MSB
0lllllll	LL	Master Tune LSB
0cccccccc	CC	don’t care
11110111	F7	End of Exclusive

Changes tuning of all channels.
MM, LL values are used to define the MIDI Master Tuning value.

T = M – 128

T: Tuning value (-99 cents to +99 cents)
M:A single byte value (28–228) that consists of bits 0–3 of MM as MSB, bits 0–3 of LL as LSB.

This setting is not reset when the GM System or XG System is turned on.

< Table 1-1>

Parameter Basic Address

	Parameter Change Address (H)	(M)	(L)	Description
SYSTEM	00	00	00	System
	00	00	7D	Drum Setup Reset
	00	00	7E	XG System On
	00	00	7F	All Parameter Reset
INFORMATION	01	00	00	System Information
EFFECT 1	02	01	00	Effect1(Reverb,Chorus,Variation)
MULTI PART	08	00	00	Multi Part 1
		:		
	08	0F	00	Multi Part 16
DRUM	30	0D	00	Drum Setup 1 ——►
	31	0D	00	Drum Setup 2

Address			Parameter
3n	0D	00	note number 13
3n	0E	00	note number 14
:	:		
3n	5B	00	note number 91

< Table 1-2 >

MIDI Parameter Change table (SYSTEM)

Address (H)			Size (H)	Data (H)	Parameter Name	Description	Default Value(H)
00	00	00	4	0000	Master Tune	-102.4..+102.3[cent]	00 04 00 00
		01		..07FF		1stbit3-0 -> bit15-12	(0400)
		02				2ndbit3-0 -> bit11-8	
		03				3rdbit3-0 -> bit7-4	
						4thbit3-0 -> bit3-0	
		04	1	00..7F	Master Volume	0..127	7F
		05	1		Not Used		
		06	1	28..58	Transpose	-24..+24[semitones]	40
		7D		n	Drum Setup Reset	n=Drum Setup Number	
		7E		00	XG System On	00=XG Sytem on	
		7F		00	All Parameter Reset	00=on (receive only)	
TOTAL SIZE			6				

< Table 1-3 >

MIDI Parameter table (System information)

Address (H)			Size (H)	Data (H)	Parameter Name	Description
01	00	00	E	20..7F	Model Name	32..127(ASCII)
		:				
		0D				
		0E	1	00		
		0F	1	01		
TOTAL SIZE			10			

(Transmitted by Dump Request. Not received. Bulk Dump Only)

< Table 1-4 >

MIDI Parameter Change table (EFFECT 1)

Address (H)			Size (H)	Data (H)	Parameter Name	Description	Default Value(H)
02	01	00	2	00..7F	Reverb Type MSB	Refer to the Effect Type List	01(=HALL1)
				00..7F	Reverb Type LSB	00 : basic type	00
		02	1	00..7F	Reverb Parameter 1	Refer to the Ef. Parameter List	Depend on Reverb type
		03	1	00..7F	Reverb Parameter 2	Refer to the Ef. Parameter List	Depend on Reverb type
		04	1	00..7F	Reverb Parameter 3	Refer to the Ef. Parameter List	Depend on Reverb type
		05	1	00..7F	Reverb Parameter 4	Refer to the Ef. Parameter List	Depend on Reverb type
		06	1	00..7F	Reverb Parameter 5	Refer to the Ef. Parameter List	Depend on Reverb type
		07	1	00..7F	Reverb Parameter 6	Refer to the Ef. Parameter List	Depend on Reverb type
		08	1	00..7F	Reverb Parameter 7	Refer to the Ef. Parameter List	Depend on Reverb type
		09	1	00..7F	Reverb Parameter 8	Refer to the Ef. Parameter List	Depend on Reverb type
		0A	1	00..7F	Reverb Parameter 9	Refer to the Ef. Parameter List	Depend on Reverb type
		0B	1	00..7F	Reverb Parameter 10	Refer to the Ef. Parameter List	Depend on Reverb type
		0C	1	00..7F	Reverb Return	-∞..0..+6dB(0..96..127)	40
		0D	1	01..7F	Reverb Pan	L63..C..R63(1..64..127)	40
TOTAL SIZE			0E				
02	01	10	1	00..7F	Reverb Parameter 11	Refer to the Ef. Parameter List	Depend on Reverb type
		11	1	00..7F	Reverb Parameter 12	Refer to the Ef. Parameter List	Depend on Reverb type
		12	1	00..7F	Reverb Parameter 13	Refer to the Ef. Parameter List	Depend on Reverb type
		13	1	00..7F	Reverb Parameter 14	Refer to the Ef. Parameter List	Depend on Reverb type
		14	1	00..7F	Reverb Parameter 15	Refer to the Ef. Parameter List	Depend on Reverb type
		15	1	00..7F	Reverb Parameter 16	Refer to the Ef. Parameter List	Depend on Reverb type
TOTAL SIZE			6				

02	01	20	2	00..7F	Chorus Type MSB	Refer to the Effect Type List	41(=Chorus1)
				00..7F	Chorus Type LSB	00 : basic type	00
		22	1	00..7F	Chorus Parameter 1	Refer to the Ef. Parameter List	Depend on Chorus Type
		23	1	00..7F	Chorus Parameter 2	Refer to the Ef. Parameter List	Depend on Chorus Type
		24	1	00..7F	Chorus Parameter 3	Refer to the Ef. Parameter List	Depend on Chorus Type
		25	1	00..7F	Chorus Parameter 4	Refer to the Ef. Parameter List	Depend on Chorus Type
		26	1	00..7F	Chorus Parameter 5	Refer to the Ef. Parameter List	Depend on Chorus Type
		27	1	00..7F	Chorus Parameter 6	Refer to the Ef. Parameter List	Depend on Chorus Type
		28	1	00..7F	Chorus Parameter 7	Refer to the Ef. Parameter List	Depend on Chorus Type
		29	1	00..7F	Chorus Parameter 8	Refer to the Ef. Parameter List	Depend on Chorus Type
		2A	1	00..7F	Chorus Parameter 9	Refer to the Ef. Parameter List	Depend on Chorus Type
		2B	1	00..7F	Chorus Parameter 10	Refer to the Ef. Parameter List	Depend on Chorus Type
		2C	1	00..7F	Chorus Return	-∞..0..+6dB(0..96..127)	40
		2D	1	01..7F	Chorus Pan	L63..C..R63(1..64..127)	40
		2E	1	00..7F	Send Chorus To Reverb	-∞..0..+6dB(0..96..127)	00
TOTAL SIZE			0F				
02	01	30	1	00..7F	Chorus Parameter 11	Refer to the Ef. Parameter List	Depend on Chorus Type
		31	1	00..7F	Chorus Parameter 12	Refer to the Ef. Parameter List	Depend on Chorus Type
		32	1	00..7F	Chorus Parameter 13	Refer to the Ef. Parameter List	Depend on Chorus Type
		33	1	00..7F	Chorus Parameter 14	Refer to the Ef. Parameter List	Depend on Chorus Type
		34	1	00..7F	Chorus Parameter 15	Refer to the Ef. Parameter List	Depend on Chorus Type
		35	1	00..7F	Chorus Parameter 16	Refer to the Ef. Parameter List	Depend on Chorus Type
TOTAL SIZE			6				
02	01	40	2	00..7F	Variation Type MSB	Refer to the Effect Type List	“05(=DELAY L,C,R)”
				00..7F	Variation Type LSB	00 : basic type	00
		42	2	00..7F	Vari. Param. 1 MSB	Refer to the Ef. Parameter List	Depend on Vari. Type
				00..7F	Vari. Param. 1 LSB	Refer to the Ef. Parameter List	Depend on Vari. Type
		44	2	00..7F	Vari. Param. 2 MSB	Refer to the Ef. Parameter List	Depend on Vari. Type
				00..7F	Vari. Param. 2 LSB	Refer to the Ef. Parameter List	Depend on Vari. Type
		46	2	00..7F	Vari. Param. 3 MSB	Refer to the Ef. Parameter List	Depend on Vari. Type
				00..7F	Vari. Param. 3 LSB	Refer to the Ef. Parameter List	Depend on Vari. Type
		48	2	00..7F	Vari. Param. 4 MSB	Refer to the Ef. Parameter List	Depend on Vari. Type
				00..7F	Vari. Param. 4 LSB	Refer to the Ef. Parameter List	Depend on Vari. Type
		4A	2	00..7F	Vari. Param. 5 MSB	Refer to the Ef. Parameter List	Depend on Vari. Type
				00..7F	Vari. Param. 5 LSB	Refer to the Ef. Parameter List	Depend on Vari. Type
		4C	2	00..7F	Vari. Param. 6 MSB	Refer to the Ef. Parameter List	Depend on Vari. Type
				00..7F	Vari. Param. 6 LSB	Refer to the Ef. Parameter List	Depend on Vari. Type
		4E	2	00..7F	Vari. Param. 7 MSB	Refer to the Ef. Parameter List	Depend on Vari. Type
				00..7F	Vari. Param. 7 LSB	Refer to the Ef. Parameter List	Depend on Vari. Type
		50	2	00..7F	Vari. Param. 8 MSB	Refer to the Ef. Parameter List	Depend on Vari. Type
				00..7F	Vari. Param. 8 LSB	Refer to the Ef. Parameter List	Depend on Vari. Type
		52	2	00..7F	Vari. Param. 9 MSB	Refer to the Ef. Parameter List	Depend on Vari. Type
				00..7F	Vari. Param. 9 LSB	Refer to the Ef. Parameter List	Depend on Vari. Type
		54	2	00..7F	Vari. Param. 10 MSB	Refer to the Ef. Parameter List	Depend on Vari. Type
				00..7F	Vari. Param. 10 LSB	Refer to the Ef. Parameter List	Depend on Vari. Type
		56	1	00..7F	Variation Return	-∞..0..+6dB(0..96..127)	40
		57	1	01..7F	Variation Pan	L63..C..R63(1..64..127)	40
		58	1	00..7F	Send Vari. To Reverb	-∞..0..+6dB(0..96..127)	00
		59	1	00..7F	Send Vari. To Chorus	-∞..0..+6dB(0..96..127)	00
		5A	1	00..01	Variation Connection	0:insertion,1:system	00
		5B	1	00..1F	Variation Part	part1..32(0..31),off(127)	7F
		5C	1	01..7F	MW Vari. Ctrl Depth	-63..+63	40
		5D	1	01..7F	PB Vari. Ctrl Depth	-63..+63	40
		5E	1	01..7F	CAT Vari. Ctrl Depth	-63..+63	40
		5F	1	01..7F	Not Used		
		60	1	01..7F	Not Used		
TOTAL SIZE			21				
02	01	70	1	00..7F	Variation Parameter 11	option Parameter	Depend on Variation Type
		71	1	00..7F	Variation Parameter 12	option Parameter	Depend on Variation Type
		72	1	00..7F	Variation Parameter 13	option Parameter	Depend on Variation Type
		73	1	00..7F	Variation Parameter 14	option Parameter	Depend on Variation Type
		74	1	00..7F	Variation Parameter 15	option Parameter	Depend on Variation Type
		75	1	00..7F	Variation Parameter 16	option Parameter	Depend on Variation Type
TOTAL SIZE			6				

< Table 1-5 >

MIDI Parameter Change table (MULTI PART)

Address (H)			Size (H)	Data (H)	Parameter Name	Description	Default Value(H)
08	nn	00	1	00..20	Element Reserve	0..32	0(Part10),2(Others)
	nn	01	1	00..7F	Bank Select MSB	0..127	7F(Part10),00(Others)
	nn	02	1	00..7F	Bank Select LSB	0..127	00
	nn	03	1	00..7F	Program Number	1..128	00
	nn	04	1	00..0F, 7F	Rcv Channel	0..16;1..16,127;off	Part No.
	nn	05	1	00..01	Mono/Poly Mode	0:mono,1:poly	01
	nn	06	1	00..02	Same Note Number Key On Assign	0:single 1:multi 2:inst (for DRUM)	01
	nn	07	1	00..02	Part Mode	0:normal 1..3:drum thru,drum1..2	00 (Except Part10) 02 (Part10)
	nn	08	1	28..58	Note Shift	-24..+24[semitones]	40
	nn	09	2	00..FF	Detune	-12.8..+12.7[Hz]	08 00
	nn	0A				1st bit3..0 -> bit7..4 2nd bit3..0 -> bit3..0	(80)
	nn	0B	1	00..7F	Volume	0..127	64
	nn	0C	1	00..7F	Velocity Sense Depth	0..127	40
	nn	0D	1	00..7F	Velocity Sense Offset	0..127	40
	nn	0E	1	00..7F	Pan	0:random L63..C..R63(1..64..127)	40

	nn	0F	1	00..7F	Note Limit Low	C-2..G8	00
	nn	10	1	00..7F	Note Limit High	C-2..G8	7F
	nn	11	1	00..7F	Dry Level	0..127	7F
	nn	12	1	00..7F	Chorus Send	0..127	00
	nn	13	1	00..7F	Reverb Send	0..127	28
	nn	14	1	00..7F	Variation Send	0..127	00
	nn	15	1	00..7F	Vibrato Rate	-64..+63	40
	nn	16	1	00..7F	Vibrato Depth	-64..+63	40
	nn	17	1	00..7F	Vibrato Delay	-64..+63	40
	nn	18	1	00..7F	Filter Cutoff Freq.	-64..+63	40
	nn	19	1	00..7F	Filter Resonance	-64..+63	40
	nn	1A	1	00..7F	EG Attack Time	-64..+63	40
	nn	1B	1	00..7F	EG Decay Time	-64..+63	40
	nn	1C	1	00..7F	EG Release Time	-64..+63	40
	nn	1D	1	28..58	MW Pitch Control	-24..+24[semitones]	40
	nn	1E	1	00..7F	MW Filter Control	-9600..+9450[cent]	40
	nn	1F	1	00..7F	MW Amp. Control	-100..+100[%]	40
	nn	20	1	00..7F	MW LFO PMod Depth	0..127	0A
	nn	21	1	00..7F	MW LFO FMod Depth	0..127	00
	nn	22	1	00..7F	MW LFO AMod Depth	0..127	00
	nn	23	1	28..58	Bend Pitch Control	-24..+24[semitones]	42
	nn	24	1	00..7F	Bend Filter Control	-9600..+9450[cent]	40
	nn	25	1	00..7F	Bend Amp. Control	-100..+100[%]	40
	nn	26	1	00..7F	Bend LFO PMod Depth	0..127	00
	nn	27	1	00..7F	Bend LFO FMod Depth	0..127	00
	nn	28	1	00..7F	Bend LFO AMod Depth	0..127	00
TOTAL SIZE			29				
	nn	30	1		Not Used		
		:	:		:		
	nn	34	1		Not Used		
	nn	36	1		Not Used		
		:	:		:		
	nn	40	1		Not Used		
	nn	41	1	00..7F	Scale Tuning C	-64..+63[cent]	40
	nn	42	1	00..7F	Scale Tuning C#	-64..+63[cent]	40
	nn	43	1	00..7F	Scale Tuning D	-64..+63[cent]	40
	nn	44	1	00..7F	Scale Tuning D#	-64..+63[cent]	40
	nn	45	1	00..7F	Scale Tuning E	-64..+63[cent]	40
	nn	46	1	00..7F	Scale Tuning F	-64..+63[cent]	40
	nn	47	1	00..7F	Scale Tuning F#	-64..+63[cent]	40
	nn	48	1	00..7F	Scale Tuning G	-64..+63[cent]	40
	nn	49	1	00..7F	Scale Tuning G#	-64..+63[cent]	40
	nn	4A	1	00..7F	Scale Tuning A	-64..+63[cent]	40
	nn	4B	1	00..7F	Scale Tuning A#	-64..+63[cent]	40
	nn	4C	1	00..7F	Scale Tuning B	-64..+63[cent]	40
	nn	4D	1	28..58	CAT Pitch Control	-24..+24[semitones]	40
	nn	4E	1	00..7F	CAT Filter Control	-9600..+9450[cent]	40
	nn	4F	1	00..7F	CAT Amplitude Control	-100..+100[%]	40
	nn	50	1	00..7F	CAT LFO PMod Depth	0..127	00
	nn	51	1	00..7F	CAT LFO FMod Depth	0..127	00
	nn	52	1	00..7F	CAT LFO AMod Depth	0..127	00
	nn	53			Not Used		
		:			:		
		66			Not Used		
	nn	67	1	00..01	Portamento Switch	off/on	00
	nn	68	1	00..7F	Portamento Time	0..127	00
	nn	69			Not Used		
		:			:		
		6E			Not Used		
TOTAL SIZE			3F				
08	nn	70	1		Not Used	Don’t care	
	nn	71	1		Not Used	Don’t care	
TOTAL SIZE			04				
08	nn	74	1		Not Used	Don’t care	
		75	1		Not Used	Don’t care	
		78	1		Not Used	Don’t care	
		79	1		Not Used	Don’t care	
		7A	1		Not Used	Don’t care	
		7B	1		Not Used	Don’t care	
		7C	1		Not Used	Don’t care	
		7D	1		Not Used	Don’t care	
		7E	1		Not Used	Don’t care	
		7F	1		Not Used	Don’t care	
TOTAL SIZE			0C				

nn = PartNumber

If there is a Drum Voice assigned to the Part, the following parameters are ineffective.

- Bank Select LSB
- Amp EG
- Portamento
- Soft Pedal
- Mono/Poly
- Scale Tuning

<Table 1-6 >

MIDI Parameter Change table (DRUM SETUP)

Address (H)			Size (H)	Data (H)	Parameter Name	Description	Default Value(H)
3n	rr	00	1	00..7F	Pitch Coarse	-64..+63	40
3n	rr	01	1	00..7F	Pitch Fine	-64..+63[cent]	40
3n	rr	02	1	00..7F	Level	0..127	Depend on the Note
3n	rr	03	1	00..7F	Alternate Group	0:off,1..127	Depend on the Note
3n	rr	04	1	00..7F	Pan	0:random L63..C..R63(1..64..127)	Depend on the Note
3n	rr	05	1	00..7F	Reverb Send Level	0..127	Depend on the Note
3n	rr	06	1	00..7F	Chorus Send Level	0..127	Depend on the Note
3n	rr	07	1	00..7F	Variation Send Level	0..127	7F
3n	rr	08	1	00..01	Key Assign	0:single,1:multi	00
3n	rr	09	1	00..01	Rcv Note Off	off/on	Depend on the Note
3n	rr	0A	1	00..01	Rcv Note On	off/on	01
3n	rr	0B	1	00..7F	Filter Cutoff Freq.	-64..63	40
3n	rr	0C	1	00..7F	Filter Resonance	-64..63	40
3n	rr	0D	1	00..7F	EG Attack Rate	-64..63	40
3n	rr	0E	1	00..7F	EG Decay1 Rate	-64..63	40
3n	rr	0F	1	00..7F	EG Decay2 Rate	-64..63	40
TOTAL SIZE		10					

n:Drum Setup Number(0 - 1)
rr:note number(0DH - 5BH)

If XG SYSTEM ON and/or GM SYSTEM ON message is received, all Drum Setup Parameter will be reset to default values.
According to the Drum Setup Reset message, individual Drum Setup Parameters can be reset to default values.

<Table 1-7 > Effect Map

If the received value does not contain an effect type in the TYPE LSB, the LSB will be directed to TYPE 0.
The panel effects are marked by "*"

REVERB TYPE

TYPE MSB		TYPE LSB												
DEC	HEX	00	01	02	03	...	07	08	...	16	17	18	19	20
000	0	NO EFFECT												
001	1	*HALL1	HALL2							*HALL2	*HALL3	*HALL4		
002	2	ROOM1	ROOM2	ROOM3						*ROOM1	*ROOM2	*ROOM3	*ROOM4	
003	3	STAGE1	STAGE2							*STAGE1	*STAGE2			
004	4	PLATE								*PLATE1	*PLATE2			
005	5	NO EFFECT												
:	:	:												
015	F	NO EFFECT												
016	10	WHITE ROOM												
017	11	TUNNEL												
018	12	CANYON												
019	13	BASEMENT												
020	14	NO EFFECT												
:	:	:												
127	7F	NO EFFECT												

CHORUS TYPE

TYPE MSB		TYPE LSB												
DEC	HEX	00	01	02	03	...	07	08	...	16	17	18	19	20
000	0	NO EFFECT												
001	1	NO EFFECT												
:	:	:												
064	40	NO EFFECT												
065	41	CHORUS1	CHORUS2	*CHORUS5				CHORUS4						
066	42	CELESTE1	*CHORUS4	CELESTE3				*CHORUS2		*CHORUS3	*CHORUS1			
067	43	FLANGER 1	*FLANGER 4					*FLANGER1		*FLANGER2	*FLANGER3			
068	44	NO EFFECT												
:	:	:												
127	7F	NO EFFECT												

VARIATION TYPE(0 – 63)

TYPE MSB		TYPE LSB												
DEC	HEX	00	01	02	03	...	07	08	...	16	17	18	19	20
000	0	NO EFFECT												
001	1	*HALL1	HALL2							*HALL2	*HALL3	*HALL4		
002	2	ROOM1	ROOM2	ROOM3						*ROOM1	*ROOM2	*ROOM3	*ROOM4	
003	3	STAGE1	STAGE2							*STAGE1	*STAGE2			
004	4	PLATE								*PLATE1	*PLATE2			
005	5	DELAY L,C,R								*DELAY LCR				
006	6	*DELAY LR												
007	7	*ECHO												
008	8	*CROSS DELAY												
009	9	*EARLY REF1	*EARLYREF2											
010	A	*GATE REVERB												
011	B	*REVERSE GATE												
012	C	NO EFFECT or THRU												
:	:	:												
019	13	NO EFFECT or THRU												
020	14	KARAOKE 1	KARAOKE 2	KARAOKE 3										
021	15	NO EFFECT or THRU												
:	:	:												
063	3F	NO EFFECT or THRU												

VARIATION TYPE(64 – 127)

TYPE MSB		TYPE LSB												
DEC	HEX	00	01	02	03	...	07	08	...	16	17	18	19	20
064	40	THRU												
065	41	CHORUS1	CHORUS2	*CHORUS5				CHORUS4						
066	42	CELESTE1	*CHORUS4	CELESTE3				*CHORUS2		*CHORUS3	*CHORUS1	*Rotary Sp5		
067	43	FLANGER 1	*FLANGER4					*FLANGER1		*FLANGER2	*FLANGER3			
068	44	SYMPHONIC								*SYMPHONIC				
069	45	ROTARY SP.								*ROTARYSP1				
070	46	TREMOLO								*TREMOLO1	*ROTARYSP4			
071	47	AUTO PAN								*AUTO PAN	*ROTARYSP2	*ROTARYSP3	*TREMOLO2	*GTRTREMOLO
072	48	*PHASER						PHASER 2						
073	49	DISTORTION												
074	4A	OVER DRIVE												
075	4B	AMP SIM.								*DIST HARD	*DIST SOFT			
076	4C	3BAND EQ								*EQ DISCO	*EQ TEL			
077	4D	2BAND EQ												
078	4E	AUTO WAH								*AUTO WAH				
079	4F	THRU												
:	:													
127	7F	THRU												

<Table 1-8 > Effect Parameter List

XG Effect Name
HALL1,HALL2
ROOM1,ROOM2,ROOM3
STAGE1,STAGE2
PLATE (reverb, variation, insertion block)

No.	Parameter	Display	Value	See Table	Comment	Control
1	Reverb Time	0.3-30.0s	0-69	table#4		
2	Diffusion	0-10	0-10			
3	Initial Delay	0.1mS-99.3mS	0-63	table#5		
4	HPF Cutoff	Thru-8.0kHz	0-52	table#3		
5	LPF Cutoff	1.0k-Thru	34-60	table#3		
6						
7						
8						
9						
10	Dry/Wet	D63>W - D=W - D<W63	1-127			•
11	Rev Delay	0.1mS-99.3mS	0-63	table#5		
12	Density	0-3 (reverb, variation block)	0-3			
13	Er/Rev Balance	E63>R - E=R - E<R63	1-127			
14						
15	Feedback Level	-63-+63	1-127			
16						

WHITE ROOM
TUNNEL
CANYON
BASEMENT (reverb, variation block)

No.	Parameter	Display	Value	See Table	Comment	Control
1	Reverb Time	0.3-30.0s	0-69	table#4		
2	Diffusion	0-10	0-10			
3	Initial Delay	0.1mS-99.3mS	0-63	table#5		
4	HPF Cutoff	Thru-8.0kHz	0-52	table#3		
5	LPF Cutoff	1.0k-Thru	34-60	table#3		
6	Width	0.5-10.2m	0-37	table#11		
7	Heigt	0.5-20.2m	0-73	table#11		
8	Depth	0.5-30.2m	0-104	table#11		
9	Wall Vary	0-30	0-30			
10	Dry/Wet	D63>W - D=W - D<W63	1-127			•
11	Rev Delay	0.1mS-99.3mS	0-63	table#5		
12	Density	0-3	0-3			
13	Er/Rev Balance	E63>R - E=R - E<R63	1-127			
14						
15	Feedback Level	-63-+63	1-127			
16						

DELAY L,C,R (variation, insertion block)

No.	Parameter	Display	Value	See Table	Comment	Control
1	Lch Delay	0.1-715.0ms (variation block)	1-7150			
2	Rch Delay	0.1-715.0ms (variation block)	1-7150			
3	Cch Delay	0.1-715.0ms (variation block)	1-7150			
4	Feedback Delay	0.1-715.0ms (variation block)	1-7150			
5	Feedback Level	-63-+63	1-127			
6	Cch Level	0-127	0-127			
7	High Damp	0.1-1.0	1-10			
8						
9						
10	Dry/Wet	D63>W - D=W - D<W63	1-127			●
11						
12						
13	EQ Low Frequency	50Hz-2.0kHz	8-40	table#3		
14	EQ Low Gain	-12-+12dB	52-76			
15	EQ High Frequency	500Hz-16.0kHz	28-58	table#3		
16	EQ High Gain	-12-+12dB	52-76			

DELAY L,R (variation, insertion block)

No.	Parameter	Display	Value	See Table	Comment	Control
1	Lch Delay	0.1-715.0ms (variation block)	1-7150			
2	Rch Delay	0.1-715.0ms (variation block)	1-7150			
3	Feedback Delay 1	0.1-715.0ms (variation block)	1-7150			
4	Feedback Delay 2	0.1-715.0ms (variation block)	1-7150			
5	Feedback Level	-63-+63	1-127			
6	High Damp	0.1-1.0	1-10			
7						
8						
9						
10	Dry/Wet	D63>W - D=W - D<W63	1-127			●
11						
12						
13	EQ Low Frequency	50Hz-2.0kHz	8-40	table#3		
14	EQ Low Gain	-12-+12dB	52-76			
15	EQ High Frequency	500Hz-16.0kHz	28-58	table#3		
16	EQ High Gain	-12-+12dB	52-76			

ECHO (variation, insertion block)

No.	Parameter	Display	Value	See Table	Comment	Control
1	Lch Delay1	0.1-355.0ms (variation block)	1-3550			
2	Lch Feedback Level	-63-+63	1-127			
3	Rch Delay1	0.1-355.0ms (variation block)	1-3550			
4	Rch Feedback Level	-63-+63	1-127			
5	High Damp	0.1-1.0	1-10			
6	Lch Delay2	0.1-355.0ms (variation block)	1-3550			
7	Rch Delay2	0.1-355.0ms (variation block)	1-3550			
8	Delay2 Level	0-127	0-127			
9						
10	Dry/Wet	D63>W - D=W - D<W63	1-127			●
11						
12						
13	EQ Low Frequency	50Hz-2.0kHz	8-40	table#3		
14	EQ Low Gain	-12-+12dB	52-76			
15	EQ High Frequency	500Hz-16.0kHz	28-58	table#3		
16	EQ High Gain	-12-+12dB	52-76			

CROSS DELAY (variation, insertion block)

No.	Parameter	Display	Value	See Table	Comment	Control
1	L->R Delay	0.1-355.0ms (variation block)	1-3550			
2	R->L Delay	0.1-355.0ms (variation block)	1-3550			
3	Feedback Level	-63-+63	1-127			
4	Input Select	L,R,L&R	0-2			
5	High Damp	0.1-1.0	1-10			
6						
7						
8						
9						
10	Dry/Wet	D63>W - D=W - D<W63	1-127			●
11						
12						
13	EQ Low Frequency	50Hz-2.0kHz	8-40	table#3		
14	EQ Low Gain	-12-+12dB	52-76			
15	EQ High Frequency	500Hz-16.0kHz	28-58	table#3		
16	EQ High Gain	-12-+12dB	52-76			

EARLY REF1,EARLY REF2(variation block)

No.	Parameter	Display	Value	See Table	Comment	Control
1	Type	S-H, L-H, Rdm, Rvs, Plt, Spr	0-5			
2	Room Size	0.1-7.0	0-44	table#6		
3	Diffusion	0-10	0-10			
4	Initial Delay	0.1mS-99.3mS	0-63	table#5		
5	Feedback Level	-63-+63	1-127			
6	HPF Cutoff	Thru-8.0kHz	0-52	table#3		
7	LPF Cutoff	1.0k-Thru	34-60	table#3		
8						
9						
10	Dry/Wet	D63>W - D=W - D<W63	1-127			●
11	Liveness	0-10	0-10			
12	Density	0-3	0-3			
13	High Damp	0.1-1.0	1-10			
14						
15						
16						

GATE REVERB
REVERSE GATE (variation block)

No.	Parameter	Display	Value	See Table	Comment	Control
1	Type	TypeA,TypeB	0-1			
2	Room Size	0.1-20.0	0-127	table#6		
3	Diffusion	0-10	0-10			
4	Initial Delay	0.1mS-200.0mS	0-127	table#5		
5	Feedback Level	-63-+63	1-127			
6	HPF Cutoff	Thru-8.0kHz	0-52	table#3		
7	LPF Cutoff	1.0k-Thru	34-60	table#3		
8						
9						
10	Dry/Wet	D63>W - D=W - D<W63	1-127			●
11	Liveness	0-10	0-10			
12	Density	0-3	0-3			
13	High Damp	0.1-1.0	1-10			
14						
15						
16						

KARAOKE1,2,3 (variation, insertion block)

No.	Parameter	Display	Value	See Table	Comment	Control
1	Delay Time	0.1mS-400.0mS	0-127	table#7		
2	Feedback Level	-63-+63	1-127			
3	HPF Cutoff	Thru-8.0kHz	0-52	table#3		
4	LPF Cutoff	1.0k-Thru	34-60	table#3		
5						
6						
7						
8						
9						
10	Dry/Wet	D63>W - D=W - D<W63	1-127			●
11						
12						
13						
14						
15						
16						

CHORUS1,2,3,4
CELESTE1,2,3,4 (chorus, variation, insertion block)

No.	Parameter	Display	Value	See Table	Comment	Control
1	LFO Frequency	0.00Hz-39.7Hz	0-127	table#1		
2	LFO Depth	0-127	0-127			
3	Feedback Level	-63-+63	1-127			
4	Delay Offset	0.0mS-50mS	0-127	table#2		
5						
6	EQ Low Frequency	50Hz-2.0kHz	8-40	table#3		
7	EQ Low Gain	-12-+12dB	52-76			
8	EQ High Frequency	500Hz-16.0kHz	28-58	table#3		
9	EQ High Gain	-12-+12dB	52-76			
10	Dry/Wet	D63>W - D=W - D<W63	1-127			●
11						
12						
13						
14						
15	Input Mode	mono/stereo	0-1			
16						

FLANGER1,2,3 (chorus, variation, insertion block)

No.	Parameter	Display	Value	See Table	Comment	Control
1	LFO Frequency	0.00Hz-39.7Hz	0-127	table#1		
2	LFO Depth	0-127	0-127			
3	Feedback Level	-63-+63	1-127			
4	Delay Offset	0.0mS-50mS	0-127	table#2		
5						
6	EQ Low Frequency	50Hz-2.0kHz	8-40	table#3		
7	EQ Low Gain	-12-+12dB	52-76			
8	EQ High Frequency	500Hz-16.0kHz	28-58	table#3		
9	EQ High Gain	-12-+12dB	52-76			
10	Dry/Wet	D63>W - D=W - D<W63	1-127			●
11						
12						
13						
14	LFO Phase Difference	-180-+180deg(resolution=3deg.)	4-124			
15						
16						

SYMPHONIC (chorus, variation, insertion block)

No.	Parameter	Display	Value	See Table	Comment	Control
1	LFO Frequency	0.00Hz-39.7Hz	0-127	table#1		
2	LFO Depth	0-127	0-127			
3	Delay Offset	0.0mS-50mS	0-127	table#2		
4						
5						
6	EQ Low Frequency	50Hz-2.0kHz	8-40	table#3		
7	EQ Low Gain	-12-+12dB	52-76			
8	EQ High Frequency	500Hz-16.0kHz	28-58	table#3		
9	EQ High Gain	-12-+12dB	52-76			
10	Dry/Wet	D63>W - D=W - D<W63	1-127			●
11						
12						
13						
14						
15						
16						

ENSEMBLE DETUNE (chorus, variation, insertion block)

No.	Parameter	Display	Value	See Table	Comment	Control
1	Detune	-50-+50cent	14-114			
2	Lch Init Delay	0.0mS-50mS	0-127	table#2		
3	Rch Init Delay	0.0mS-50mS	0-127	table#2		
4						
5						
6						
7						
8						
9						
10	Dry/Wet	D63>W - D=W - D<W63	1-127			●
11						
12						
13						
14						
15						
16						

AMBIENCE (variation block)

No.	Parameter	Display	Value	See Table	Comment	Control
1	Delay Time	0.0mS-50mS	0-127	table#2		
2	Output Phase	normal/invers	0-1			
3						
4						
5						
6	EQ Low Frequency	32Hz-2.0kHz	4-40	table#3		
7	EQ Low Gain	-12-+12dB	52-76			
8	EQ High Frequency	500Hz-16.0kHz	28-58	table#3		
9	EQ High Gain	-12-+12dB	52-76			
10	Dry/Wet	D63>W - D=W - D<W63	1-127			●
11						
12						
13						
14						
15						
16						

ROTARY SPEAKER (variation, insertion block)

No.	Parameter	Display	Value	See Table	Comment	Control
1	LFO Frequency	0.00Hz–39.7Hz	0–127	table#1		●
2	LFO Depth	0–127	0–127			
3						
4						
5						
6	EQ Low Frequency	50Hz–2.0kHz	8–40	table#3		
7	EQ Low Gain	-12–+12dB	52–76			
8	EQ High Frequency	500Hz–16.0kHz	28–58	table#3		
9	EQ High Gain	-12–+12dB	52–76			
10	Dry/Wet	D63>W – D=W – D<W63	1–127			
11						
12						
13						
14						
15						
16						

2WAY ROTARY SPEAKER (variation block)

No.	Parameter	Display	Value	See Table	Comment	Control
1	Rotor Speed	0.0Hz–39.7Hz	0–127	table#1		●
2	Drive Low	0–127	0–127			
3	Drive High	0–127	0–127			
4	Low/High	L63>H – L=H – L<H63	1–127			
5						
6	EQ Low Frequency	32Hz–2.0kHz	4–40	table#3		
7	EQ Low Gain	-12–+12dB	52–76			
8	EQ High Frequency	500Hz–16.0kHz	28–58	table#3		
9	EQ High Gain	-12–+12dB	52–76			
10						
11	Crossover Frequency	100Hz–10.0kHz	14–54	table#3		
12	Mic L-R Angle	0deg–180deg(resolution=3deg.)	0–60			
13						
14						
15						
16						

TREMOLO (variation, insertion block)

No.	Parameter	Display	Value	See Table	Comment	Control
1	LFO Frequency	0.00Hz–39.7Hz	0–127	table#1		●
2	AM Depth	0–127	0–127			
3	PM Depth	0–127	0–127			
4						
5						
6	EQ Low Frequency	50Hz–2.0kHz	8–40	table#3		
7	EQ Low Gain	-12–+12dB	52–76			
8	EQ High Frequency	500Hz–16.0kHz	28–58	table#3		
9	EQ High Gain	-12–+12dB	52–76			
10						
11						
12						
13						
14	LFO Phase Difference	-180–+180deg(resolution=3deg.)	4–124			
15	Input Mode	mono/stereo	0–1			
16						

AUTO PAN (variation, insertion block)

No.	Parameter	Display	Value	See Table	Comment	Control
1	LFO Frequency	0.00Hz–39.7Hz	0–127	table#1		●
2	L/R Depth	0–127	0–127			
3	F/R Depth	0–127	0–127			
4	PAN Direction	L<->R,L->R,L<-R,Lturn,Rturn,L/R	0–5			
5						
6	EQ Low Frequency	50Hz–2.0kHz	8–40	table#3		
7	EQ Low Gain	-12–+12dB	52–76			
8	EQ High Frequency	500Hz–16.0kHz	28–58	table#3		
9	EQ High Gain	-12–+12dB	52–76			
10						
11						
12						
13						
14						
15						
16						

PHASER 1 (chorus, variation, insertion block)

No.	Parameter	Display	Value	See Table	Comment	Control
1	LFO Frequency	0.00Hz–39.7Hz	0–127	table#1		
2	LFO Depth	0–127	0–127			
3	Phase Shift Offset	0–127	0–127			
4	Feedback Level	-63–+63	1–127			
5						
6	EQ Low Frequency	50Hz–2.0kHz	8–40	table#3		
7	EQ Low Gain	-12–+12dB	52–76			
8	EQ High Frequency	500Hz–16.0kHz	28–58	table#3		
9	EQ High Gain	-12–+12dB	52–76			
10	Dry/Wet	D63>W – D=W – D<W63	1–127			●
11	Stage	6–10 (variation block)	6–10			
12	Diffusion	mono/stereo	0–1			
13						
14						
15						
16						

PHASER 2 (variation block)

No.	Parameter	Display	Value	See Table	Comment	Control
1	LFO Frequency	0.00Hz–39.7Hz	0–127	table#1		
2	LFO Depth	0–127	0–127			
3	Phase Shift Offset	0–127	0–127			
4	Feedback Level	-63–+63	1–127			
5						
6	EQ Low Frequency	50Hz–2.0kHz	8–40	table#3		
7	EQ Low Gain	-12–+12dB	52–76			
8	EQ High Frequency	500Hz–16.0kHz	28–58	table#3		
9	EQ High Gain	-12–+12dB	52–76			
10	Dry/Wet	D63>W – D=W – D<W63	1–127			●
11	Stage	3,4,5	3–5			
12						
13	LFO Phase Difference	-180deg–+180deg (resolution=3deg.)	4–124			
14						
15						
16						

DISTORTION
OVERDRIVE (variation, insertion block)

No.	Parameter	Display	Value	See Table	Comment	Control
1	Drive	0–127	0–127			●
2	EQ Low Frequency	50Hz–2.0kHz	8–40	table#3		
3	EQ Low Gain	-12–+12dB	52–76			
4	LPF Cutoff	1.0k–Thru	34–60	table#3		
5	Output Level	0–127	0–127			
6						
7	EQ Mid Frequency	500Hz–10.0kHz	28–54	table#3		
8	EQ Mid Gain	-12–+12dB	52–76			
9	EQ Mid Width	1.0–12.0	10–120			
10	Dry/Wet	D63>W – D=W – D<W63	1–127			
11	Edge(Clip Curve)	0–127	0–127	mild–sharp		
12						
13						
14						
15						
16						

COMP+DIST (variation block)

No.	Parameter	Display	Value	See Table	Comment	Control
1	Drive	0–127	0–127			●
2	EQ Low Frequency	32Hz–2.0kHz	4–40	table#3		
3	EQ Low Gain	-12–+12dB	52–76			
4	LPF Cutoff	1.0k–Thru	34–60	table#3		
5	Output Level	0–127	0–127			
6						
7	EQ Mid Frequency	100Hz–10.0kHz	14–54	table#3		
8	EQ Mid Gain	-12–+12dB	52–76			
9	EQ Mid Width	1.0–12.0	10–120			
10	Dry/Wet	D63>W – D=W – D<W63	1–127			
11	Edge(Clip Curve)	0–127	0–127	mild–sharp		
12	Attack	1ms–40ms	0–19	table#8		
13	Release	10ms–680ms	0–15	table#9		
14	Threshold	-48dB– -6dB	79–121			
15	Ratio	1.0–20.0	0–7	table#10		
16						

AMP SIMULATOR (variation, insertion block)

No.	Parameter	Display	Value	See Table	Comment	Control
1	Drive	0–127	0–127			●
2	AMP Type	Off,Stack,Combo,Tube	0–3			
3	LPF Cutoff	1.0k–Thru	34–60	table#3		
4	Output Level	0–127	0–127			
5						
6						
7						
8						
9						
10	Dry/Wet	D63>W – D=W – D<W63	1–127			
11	Edge(Clip Curve)	0–127	0–127	mild–sharp		
12						
13						
14						
15						
16						

3BAND EQ(MONO) (variation, insertion block)

No.	Parameter	Display	Value	See Table	Comment	Control
1	EQ Low Gain	-12–+12dB	52–76			
2	EQ Mid Frequency	500Hz–10.0kHz	28–54	table#3		
3	EQ Mid Gain	-12–+12dB	52–76			
4	EQ Mid Width	1.0–12.0	10–120			
5	EQ High Gain	-12–+12dB	52–76			
6	EQ Low Frequency	50Hz–2.0kHz	8–40	table#3		
7	EQ High Frequency	500Hz–16.0kHz	28–58	table#3		
8						
9						
10						
11						
12						
13						
14						
15	Input Mode	mono/stereo	0–1			
16						

2BAND EQ(STEREO) (variation, insertion block)

No.	Parameter	Display	Value	See Table	Comment	Control
1	EQ Low Frequency	50Hz–2.0kHz	8–40	table#3		
2	EQ Low Gain	-12–+12dB	52–76			
3	EQ High Frequency	500Hz–16.0kHz	28–58	table#3		
4	EQ High Gain	-12–+12dB	52–76			
5						
6						
7						
8						
9						
10						
11						
12						
13						
14						
15						
16						

AUTO WAH (variation, insertion block)

No.	Parameter	Display	Value	See Table	Comment	Control
1	LFO Frequency	0.00Hz–39.7Hz	0–127	table#1		
2	LFO Depth	0–127	0–127			
3	Cutoff Frequency Offset	0–127	0–127		●	
4	Resonance	1.0–12.0	10–120			
5						
6	EQ Low Frequency	50Hz–2.0kHz	8–40	table#3		
7	EQ Low Gain	-12–+12dB	52–76			
8	EQ High Frequency	500Hz–16.0kHz	28–58	table#3		
9	EQ High Gain	-12–+12dB	52–76			
10	Dry/Wet	D63>W – D=W – D<W63	1–127			
11	Drive	0–127(variation block)	0–127			
12						
13						
14						
15						
16						

AUTO WAH+DIST
AUTO WHA+ODRV (variation block)

No.	Parameter	Display	Value	See Table	Comment	Control
1	LFO Frequency	0.00Hz–39.7Hz	0–127	table#1		
2	LFO Depth	0–127	0–127			
3	Cutoff Frequency Offset	0–127	0–127		•	
4	Resonance	1.0–12.0	10–120			
5						
6	EQ Low Frequency	32Hz–2.0kHz	4–40	table#3		
7	EQ Low Gain	-12–+12dB	52–76			
8	EQ High Frequency	500Hz–16.0kHz	28–58	table#3		
9	EQ High Gain	-12–+12dB	52–76			
10	Dry/Wet	D63>W – D=W – D<W63	1–127			
11	Drive	0–127	0–127			
12	EQ Low Gain (distortion)		-12–+12dB	52–76		
13	EQ Mid Gain (distortion)		-12–+12dB	52–76		
14	LPF Cutoff	1.0kHz–thru	34–60	table#3		
15	Output Level	0–127	0–127			
16						

TOUCH WAH 1 (variation, insertion block)
TOUCH WAH+DIST (variation block)

No.	Parameter	Display	Value	See Table	Comment	Control
1	Sensitive	0–127	0–127			
2	Cutoff Frequency Offset	0–127	0–127		•	
3	Resonance	1.0–12.0	10–120			
4						
5						
6	EQ Low Frequency	32Hz–2.0kHz	4–40	table#3		
7	EQ Low Gain	-12–+12dB	52–76			
8	EQ High Frequency	500Hz–16.0kHz	28–58	table#3		
9	EQ High Gain	-12–+12dB	52–76			
10	Dry/Wet	D63>W – D=W – D<W63	1–127			
11	Drive	0–127(variation block)	0–127			
12						
13						
14						
15						
16						

TOUCH WAH 2 (variation, insertion block)
TOUCH WAH+ODRV (variation block)

No.	Parameter	Display	Value	See Table	Comment	Control
1	Sensitive	0–127	0–127			
2	Cutoff Frequency Offset	0–127	0–127		•	
3	Resonance	1.0–12.0	10–120			
4						
5						
6	EQ Low Frequency	32Hz–2.0kHz	4–40	table#3		
7	EQ Low Gain	-12–+12dB	52–76			
8	EQ High Frequency	500Hz–16.0kHz	28–58	table#3		
9	EQ High Gain	-12–+12dB	52–76			
10	Dry/Wet	D63>W – D=W – D<W63	1–127			
11	Drive	0–127(variation block)	0–127			
12	EQ Low Gain (distortion)	-12–+12dB(variation block)	52–76			
13	EQ Mid Gain (distortion)	-12–+12dB(variation block)	52–76			
14	LPF Cutoff	1.0kHz–thru(variation block)	34–60	table#3		
15	Output Level	0–127(variation block)	0–127			
16	Release	10–680ms	52–67			

PITCH CHANGE 1 (variation block)

No.	Parameter	Display	Value	See Table	Comment	Control
1	Pitch	-24–+24	40–88			
2	Initial Delay	0.1mS–400.0mS	0–127	table#7		
3	Fine 1	-50–+50	14–114			
4	Fine 2	-50–+50	14–114			
5	Feedback Level	-63–+63	1–127			
6						
7						
8						
9						
10	Dry/Wet	D63>W – D=W – D<W63	1–127			•
11	Pan 1	L63–R63	1–127			
12	Output Level 1	0–127	0–127			
13	Pan 2	L63–R63	1–127			
14	Output Level 2	0–127	0–127			
15						
16						

PITCH CHANGE 2 (variation block)

No.	Parameter	Display	Value	See Table	Comment	Control
1	Pitch	-24–+24	40–88			
2	Initial Delay	0.1mS–400.0mS	0–127	table#7		
3	Fine 1	-50–+50cent	14–114			
4	Fine 2	-50–+50cent	14–114			
5	Feedback Level	-63–+63	1–127			
6						
7						
8						
9						
10	Dry/Wet	D63>W – D=W – D<W63	1–127			•
11	Pan 1	L63–R63	1–127			
12	Output Level 1	0–127	0–127			
13	Pan 2	L63–R63	1–127			
14	Output Level 2	0–127	0–127			
15						
16						

COMPRESSOR (variation, insertion block)

No.	Parameter	Display	Value	See Table	Comment	Control
1	Attack	1–40ms	0–19	table#8		
2	Release	10–680ms	0–15	table#9		
3	Threshold	-48– -6dB	79–121			
4	Ratio	1.0–20.0	0–7	table#10		
5	Output Level	0–127	0–127			
6						
7						
8						
9						
10						
11						
12						
13						
14						
15						
16						

NOISE GATE (variation, insertion block)

No.	Parameter	Display	Value	See Table	Comment	Control
1	Attack	1–40ms	0–19	table#8		
2	Release	10–680ms	0–15	table#9		
3	Threshold	-72– -30dB	55–97			
4	Output Level	0–127	0–127			
5						
6						
7						
8						
9						
10						
11						
12						
13						
14						
15						
16						

VOICE CANCEL (variation block)

No.	Parameter	Display	Value	See Table	Comment	Control
1						
2						
3						
4						
5						
6						
7						
8						
9						
10						
11	Low Adjust	0–26	0–26			
12	High Adjust	0–26	0–26			
13						
14						
15						
16						

NO EFFECT (reverb, chorus, variation block)
THRU (variation, insertion block)

No.	Parameter	Display	Value	See Table	Comment	Control
1						
2						
3						
4						
5						
6						
7						
8						
9						
10						
11						
12						
13						
14						
15						
16						

HARMONIC ENHANCER (variation block)

No.	Parameter	Display	Value	See Table	Comment	Control
1	HPF Cutoff	500Hz–16kHz	28–58	table#3		
2	Drive	0–127	0–127			
3	Mix Level	0–127	0–127			
4						
5						
6						
7						
8						
9						
10						
11						
12						
13						
14						
15						
16						

TALKING MODULATION (variation block)

No.	Parameter	Display	Value	See Table	Comment	Control
1	Vowel	a,i,u,e,o	0–4			
2	Move speed	1–62	1–62			
3	Drive	0–127	0–127			
4	Output Level	0–127	0–127			
5						
6						
7						
8						
9						
10						
11						
12						
13						
14						
15						
16						

LO-FI (variation block)

No.	Parameter	Display	Value	See Table	Comment	Control
1	Sampling Freq Control	a,i,u,e,o	0–4			
2	Word Length	1–62	1–62			
3	Output Gain	0–127	0–127			
4	LPF Cutoff	0–127	0–127			
5	Filter Type	Thru,PowerBass,Radio,Tel, Clean,Low	0–5			
6	LPF Resonanc	1.0–12.0	10–120			
7	Bit Assign	0–6	0–6			
8	Emphasis	Off/On	0–1			
9						
10	Dry/Wet	D63>W – D=W – D<W63	1–127			•
11						
12						
13						
14						
15	Input Mode	mono/stereo				
16						

DIST+DELAY (variation block)
OVERDRIVE+DELAY (variation block)

No.	Parameter	Display	Value	See Table	Comment	Control
1	Lch Delay Time	0.1–1486.0ms	1–14860			
2	Rch Delay Time	0.1–1486.0ms	1–14860			
3	Delay Feedback Time	0.1–1486.0ms	1–14860			
4	Delay Feedback Level	-63–+63	1–127			
5	Delay Mix	0–127	0–127			
6	Dist Drive	0–127	0–127			
7	Dist Output Level	0–127	0–127			
8	Dist EQ Low Gain	-12–+12dB	52–76			
9	Dist EQ Mid Gain	-12–+12dB	52–76			
10	Dry/Wet	D63>W – D=W – D<W63	1–127			•
11						
12						
13						
14						
15						
16						

COMP+DIST+DELAY (variation block)
COMP+OVERDRIVE+DELAY (variation block)

No.	Parameter	Display	Value	See Table	Comment	Control
1	Delay Time	0.1–1486.0ms	1–14860			
2	Delay Feedback Level	-63–+63	1–127			
3	Delay Mix	0–127	0–127			
4	Dist Drive	0–127	0–127			
5	Dist Output Level	0–127	0–127			
6	Dist EQ Low Gain	-12–+12dB	52–76			
7	Dist EQ Mid Gain	-12–+12dB	52–76			
8						
9						
10	Dry/Wet	D63>W – D=W – D<W63	1–127			•
11	Comp. Attack	1ms–40ms	0–19	table#8		
12	Comp. Release	10ms–680ms	0–15	table#9		
13	Comp. Threshold	-48dB– -6dB	79–121			
14	Comp. Ratio	1.0–20.0	0–7	table#10		
15						
16						

WAH+DIST+DELAY (variation block)
WAH+OVERDRIVE+DELAY (variation block)

No.	Parameter	Display	Value	See Table	Comment	Control
1	Delay Time	0.1–1486.0ms	1–14860			
2	Delay Feedback Level	-63–+63	1–127			
3	Delay Mix	0–127	0–127			
4	Dist Drive	0–127	0–127			
5	Dist Output Level	0–127	0–127			
6	Dist EQ Low Gain	-12–+12dB	52–76			
7	Dist EQ Mid Gain	-12–+12dB	52–76			
8						
9						
10	Dry/Wet	D63>W – D=W – D<W63	1–127			•
11	Wah Sensitive	0–127	0–127			
12	Wah Cutoff Freq Offset	0–127	0–127			
13	Wah Resonance	1.0–12.0	10–120			
14	Wah Release	10–680ms	52–67			
15						
16						

Note: Parameter 10 (Dry/Wet) can only be set for insertion type effects.

VOCAL HARMONY MIDI SPECIFICATIONS

Channel message

1) Note on / off — Harmony ch: ○ Melody ch: ○

`9n kk vv` note on message

Specifies pitch in the Vocoder mode.
Velocity not recognized.
Also used as Gender Threshold source for the Melody channel.

`8n kk vv` note off message — Harmony ch: ○ Melody ch: ○

Turns the current note off in the Vocoder mode.

`9n kk 00`

Also used as Gender Threshold source for the Melody channel.

2) Control change

			Harmony ch	Melody ch
Bn 40	vv	damper pedal	○	○
64		RPN	○	○
65		RPN	○	○
62		NRPN	○	○
63		NRPN	○	○
06		Data entry MSB	○	○
64		Data Increment	○	○
26		Data Decrement	○	○
7B		All note off	○	○

3) RPN

MSB	LSB		Harmony ch	Melody ch
00	00	Pitch bend sensitivity	○	○
7F	7F	NULL	○	○

4) NRPN

MSB	LSB		Harmony ch	Melody ch
00	00	Harmony mute	○	×
01	08	Vibrato rate modulation	○	○
01	09	Vibrato depth modulation	○	○
01	0A	Vibrato delay modulation	○	○
01	1A	Detune modulation	○	×

Controls the overall amount of detune.

02	10	Harmony 1 volume	○	×
02	11	Harmony 2 volume	○	×
02	20	Harmony 1 pan	○	×
02	21	Harmony 2 pan	○	×
02	30	Harmony 1 detune	○	×
02	31	Harmony 2 detune	○	×
03	00	Lead gender type	×	○
03	01	Lead gender amount	×	○

5) Pitch bend

`E0 nn nn` — Harmony ch: ○ Melody ch: ○

Only effective when melody channel Lead Gender ON.

<Table 1-9 > Effect Data Value Assign Table

Table#1
LFO Frequency

Data	Value	Data	Value	Data	Value	Data	Value
0	0.00	32	1.35	64	2.69	96	8.41
1	0.04	33	1.39	65	2.78	97	8.75
2	0.08	34	1.43	66	2.86	98	9.08
3	0.13	35	1.47	67	2.94	99	9.42
4	0.17	36	1.51	68	3.03	100	9.76
5	0.21	37	1.56	69	3.11	101	10.1
6	0.25	38	1.60	70	3.20	102	10.8
7	0.29	39	1.64	71	3.28	103	11.4
8	0.34	40	1.68	72	3.37	104	12.1
9	0.38	41	1.72	73	3.45	105	12.8
10	0.42	42	1.77	74	3.53	106	13.5
11	0.46	43	1.81	75	3.62	107	14.1
12	0.51	44	1.85	76	3.70	108	14.8
13	0.55	45	1.89	77	3.87	109	15.5
14	0.59	46	1.94	78	4.04	110	16.2
15	0.63	47	1.98	79	4.21	111	16.8
16	0.67	48	2.02	80	4.37	112	17.5
17	0.72	49	2.06	81	4.54	113	18.2
18	0.76	50	2.10	82	4.71	114	19.5
19	0.80	51	2.15	83	4.88	115	20.9
20	0.84	52	2.19	84	5.05	116	22.2
21	0.88	53	2.23	85	5.22	117	23.6
22	0.93	54	2.27	86	5.38	118	24.9
23	0.97	55	2.31	87	5.55	119	26.2
24	1.01	56	2.36	88	5.72	120	27.6
25	1.05	57	2.40	89	6.06	121	28.9
26	1.09	58	2.44	90	6.39	122	30.3
27	1.14	59	2.48	91	6.73	123	31.6
28	1.18	60	2.52	92	7.07	124	33.0
29	1.22	61	2.57	93	7.40	125	34.3
30	1.26	62	2.61	94	7.74	126	37.0
31	1.30	63	2.65	95	8.08	127	39.7

Table#2
Modulation Delay Offset

Data	Value	Data	Value	Data	Value	Data	Value
0	0.0	32	3.2	64	6.4	96	9.6
1	0.1	33	3.3	65	6.5	97	9.7
2	0.2	34	3.4	66	6.6	98	9.8
3	0.3	35	3.5	67	6.7	99	9.9
4	0.4	36	3.6	68	6.8	100	10.0
5	0.5	37	3.7	69	6.9	101	11.1
6	0.6	38	3.8	70	7.0	102	12.2
7	0.7	39	3.9	71	7.1	103	13.3
8	0.8	40	4.0	72	7.2	104	14.4
9	0.9	41	4.1	73	7.3	105	15.5
10	1.0	42	4.2	74	7.4	106	17.1
11	1.1	43	4.3	75	7.5	107	18.6
12	1.2	44	4.4	76	7.6	108	20.2
13	1.3	45	4.5	77	7.7	109	21.8
14	1.4	46	4.6	78	7.8	110	23.3
15	1.5	47	4.7	79	7.9	111	24.9
16	1.6	48	4.8	80	8.0	112	26.5
17	1.7	49	4.9	81	8.1	113	28.0
18	1.8	50	5.0	82	8.2	114	29.6
19	1.9	51	5.1	83	8.3	115	31.2
20	2.0	52	5.2	84	8.4	116	32.8
21	2.1	53	5.3	85	8.5	117	34.3
22	2.2	54	5.4	86	8.6	118	35.9
23	2.3	55	5.5	87	8.7	119	37.5
24	2.4	56	5.6	88	8.8	120	39.0
25	2.5	57	5.7	89	8.9	121	40.6
26	2.6	58	5.8	90	9.0	122	42.2
27	2.7	59	5.9	91	9.1	123	43.7
28	2.8	60	6.0	92	9.2	124	45.3
29	2.9	61	6.1	93	9.3	125	46.9
30	3.0	62	6.2	94	9.4	126	48.4
31	3.1	63	6.3	95	9.5	127	50.0

Table#3
EQ Frequency

Data	Value	Data	Value
0	THRU(0)	32	800
1	22	33	900
2	25	34	1.0k
3	28	35	1.1k
4	32	36	1.2k
5	36	37	1.4k
6	40	38	1.6k
7	45	39	1.8k
8	50	40	2.0k
9	56	41	2.2k
10	63	42	2.5k
11	70	43	2.8k
12	80	44	3.2k
13	90	45	3.6k
14	100	46	4.0k
15	110	47	4.5k
16	125	48	5.0k
17	140	49	5.6k
18	160	50	6.3k
19	180	51	7.0k
20	200	52	8.0k
21	225	53	9.0k
22	250	54	10.0k
23	280	55	11.0k
24	315	56	12.0k
25	355	57	14.0k
26	400	58	16.0k
27	450	59	18.0k
28	500	60	THRU(20.0k)
29	560		
30	630		
31	700		

Table#4
Reverb time

Data	Value	Data	Value	Data	Value
0	0.3	32	3.5	64	17.0
1	0.4	33	3.6	65	18.0
2	0.5	34	3.7	66	19.0
3	0.6	35	3.8	67	20.0
4	0.7	36	3.9	68	25.0
5	0.8	37	4.0	69	30.0
6	0.9	38	4.1		
7	1.0	39	4.2		
8	1.1	40	4.3		
9	1.2	41	4.4		
10	1.3	42	4.5		
11	1.4	43	4.6		
12	1.5	44	4.7		
13	1.6	45	4.8		
14	1.7	46	4.9		
15	1.8	47	5.0		
16	1.9	48	5.5		
17	2.0	49	6.0		
18	2.1	50	6.5		
19	2.2	51	7.0		
20	2.3	52	7.5		
21	2.4	53	8.0		
22	2.5	54	8.5		
23	2.6	55	9.0		
24	2.7	56	9.5		
25	2.8	57	10.0		
26	2.9	58	11.0		
27	3.0	59	12.0		
28	3.1	60	13.0		
29	3.2	61	14.0		
30	3.3	62	15.0		
31	3.4	63	16.0		

Table#5
Delay Time(200.0ms)

Data	Value	Data	Value	Data	Value	Data	Value
0	0.1	32	50.5	64	100.8	96	151.2
1	1.7	33	52.0	65	102.4	97	152.8
2	3.2	34	53.6	66	104.0	98	154.4
3	4.8	35	55.2	67	105.6	99	155.9
4	6.4	36	56.8	68	107.1	100	157.5
5	8.0	37	58.3	69	108.7	101	159.1
6	9.5	38	59.9	70	110.3	102	160.6
7	11.1	39	61.5	71	111.9	103	162.2
8	12.7	40	63.1	72	113.4	104	163.8
9	14.3	41	64.6	73	115.0	105	165.4
10	15.8	42	66.2	74	116.6	106	166.9
11	17.4	43	67.8	75	118.2	107	168.5
12	19.0	44	69.4	76	119.7	108	170.1
13	20.6	45	70.9	77	121.3	109	171.7
14	22.1	46	72.5	78	122.9	110	173.2
15	23.7	47	74.1	79	124.4	111	174.8
16	25.3	48	75.7	80	126.0	112	176.4
17	26.9	49	77.2	81	127.6	113	178.0
18	28.4	50	78.8	82	129.2	114	179.5
19	30.0	51	80.4	83	130.7	115	181.1
20	31.6	52	81.9	84	132.3	116	182.7
21	33.2	53	83.5	85	133.9	117	184.3
22	34.7	54	85.1	86	135.5	118	185.8
23	36.3	55	86.7	87	137.0	119	187.4
24	37.9	56	88.2	88	138.6	120	189.0
25	39.5	57	89.8	89	140.2	121	190.6
26	41.0	58	91.4	90	141.8	122	192.1
27	42.6	59	93.0	91	143.3	123	193.7
28	44.2	60	94.5	92	144.9	124	195.3
29	45.7	61	96.1	93	146.5	125	196.9
30	47.3	62	97.7	94	148.1	126	198.4
31	48.9	63	99.3	95	149.6	127	200.0

Table#6
Room Size

Data	Value	Data	Value	Data	Value	Data	Value
0	0.1	32	5.1	64	10.1	96	15.1
1	0.3	33	5.3	65	10.3	97	15.3
2	0.4	34	5.4	66	10.4	98	15.5
3	0.6	35	5.6	67	10.6	99	15.6
4	0.7	36	5.7	68	10.8	100	15.8
5	0.9	37	5.9	69	10.9	101	15.9
6	1.0	38	6.1	70	11.1	102	16.1
7	1.2	39	6.2	71	11.2	103	16.2
8	1.4	40	6.4	72	11.4	104	16.4
9	1.5	41	6.5	73	11.5	105	16.6
10	1.7	42	6.7	74	11.7	106	16.7
11	1.8	43	6.8	75	11.9	107	16.9
12	2.0	44	7.0	76	12.0	108	17.0
13	2.1	45	7.2	77	12.2	109	17.2
14	2.3	46	7.3	78	12.3	110	17.3
15	2.5	47	7.5	79	12.5	111	17.5
16	2.6	48	7.6	80	12.6	112	17.6
17	2.8	49	7.8	81	12.8	113	17.8
18	2.9	50	7.9	82	12.9	114	18.0
19	3.1	51	8.1	83	13.1	115	18.1
20	3.2	52	8.2	84	13.3	116	18.3
21	3.4	53	8.4	85	13.4	117	18.4
22	3.5	54	8.6	86	13.6	118	18.6
23	3.7	55	8.7	87	13.7	119	18.7
24	3.9	56	8.9	88	13.9	120	18.9
25	4.0	57	9.0	89	14.0	121	19.1
26	4.2	58	9.2	90	14.2	122	19.2
27	4.3	59	9.3	91	14.4	123	19.4
28	4.5	60	9.5	92	14.5	124	19.5
29	4.6	61	9.7	93	14.7	125	19.7
30	4.8	62	9.8	94	14.8	126	19.8
31	5.0	63	10.0	95	15.0	127	20.0

Table#7
Delay Time(400.0ms)

Data	Value	Data	Value	Data	Value	Data	Value
0	0.1	32	100.9	64	201.6	96	302.4
1	3.2	33	104.0	65	204.8	97	305.5
2	6.4	34	107.2	66	207.9	98	308.7
3	9.5	35	110.3	67	211.1	99	311.8
4	12.7	36	113.5	68	214.2	100	315.0
5	15.8	37	116.6	69	217.4	101	318.1
6	19.0	38	119.8	70	220.5	102	321.3
7	22.1	39	122.9	71	223.7	103	324.4
8	25.3	40	126.1	72	226.8	104	327.6
9	28.4	41	129.2	73	230.0	105	330.7
10	31.6	42	132.4	74	233.1	106	333.9
11	34.7	43	135.5	75	236.3	107	337.0
12	37.9	44	138.6	76	239.4	108	340.2
13	41.0	45	141.8	77	242.6	109	343.3
14	44.2	46	144.9	78	245.7	110	346.5
15	47.3	47	148.1	79	248.9	111	349.6
16	50.5	48	151.2	80	252.0	112	352.8
17	53.6	49	154.4	81	255.2	113	355.9
18	56.8	50	157.5	82	258.3	114	359.1
19	59.9	51	160.7	83	261.5	115	362.2
20	63.1	52	163.8	84	264.6	116	365.4
21	66.2	53	167.0	85	267.7	117	368.5
22	69.4	54	170.1	86	270.9	118	371.7
23	72.5	55	173.3	87	274.0	119	374.8
24	75.7	56	176.4	88	277.2	120	378.0
25	78.8	57	179.6	89	280.3	121	381.1
26	82.0	58	182.7	90	283.5	122	384.3
27	85.1	59	185.9	91	286.6	123	387.4
28	88.3	60	189.0	92	289.8	124	390.6
29	91.4	61	192.2	93	292.9	125	393.7
30	94.6	62	195.3	94	296.1	126	396.9
31	97.7	63	198.5	95	299.2	127	400.0

Table#8
Compressor Attack Time

Data	Value
0	1
1	2
2	3
3	4
4	5
5	6
6	7
7	8
8	9
9	10
10	12
11	14
12	16
13	18
14	20
15	23
16	26
17	30
18	35
19	40

Table#9
Compressor Release Time

Data	Value
0	10
1	15
2	25
3	35
4	45
5	55
6	65
7	75
8	85
9	100
10	115
11	140
12	170
13	230
14	340
15	680

Table#10
Compressor Ratio

Data	Value
0	1.0
1	1.5
2	2.0
3	3.0
4	5.0
5	7.0
6	10.0
7	20.0

Table#11
Reverb Width;Depth;Height

Data	Value	Data	Value	Data	Value	Data	Value
0	0.5	32	8.8	64	17.6	96	27.5
1	0.8	33	9.1	65	17.9	97	27.8
2	1.0	34	9.4	66	18.2	98	28.1
3	1.3	35	9.6	67	18.5	99	28.5
4	1.5	36	9.9	68	18.8	100	28.8
5	1.8	37	10.2	69	19.1	101	29.2
6	2.0	38	10.4	70	19.4	102	29.5
7	2.3	39	10.7	71	19.7	103	29.9
8	2.6	40	11.0	72	20.0	104	30.2
9	2.8	41	11.2	73	20.2		
10	3.1	42	11.5	74	20.5		
11	3.3	43	11.8	75	20.8		
12	3.6	44	12.1	76	21.1		
13	3.9	45	12.3	77	21.4		
14	4.1	46	12.6	78	21.7		
15	4.4	47	12.9	79	22.0		
16	4.6	48	13.1	80	22.4		
17	4.9	49	13.4	81	22.7		
18	5.2	50	13.7	82	23.0		
19	5.4	51	14.0	83	23.3		
20	5.7	52	14.2	84	23.6		
21	5.9	53	14.5	85	23.9		
22	6.2	54	14.8	86	24.2		
23	6.5	55	15.1	87	24.5		
24	6.7	56	15.4	88	24.9		
25	7.0	57	15.6	89	25.2		
26	7.2	58	15.9	90	25.5		
27	7.5	59	16.2	91	25.8		
28	7.8	60	16.5	92	26.1		
29	8.0	61	16.8	93	26.5		
30	8.3	62	17.1	94	26.8		
31	8.6	63	17.3	95	27.1		

Clavinova®

CVP-105

PARTS LIST

CONTENTS

OVERALL ASSEMBLY ····· 2
MAIN UNIT 1/2 ····· 3
MAIN UNIT 2/2 ····· 5
CONTROL PANEL ASSEMBLY····· 6
MAIN BOX ASSEMBLY····· 8
SPEAKER BOX ASSEMBLY ····· 10
LEG PEDAL ASSEMBLY ····· 12
PEDAL BOX ASSEMBLY ····· 13
PEDAL ASSEMBLY ····· 14
FU60 ASSEMBLY ····· 15
MA60 ASSEMBLY····· 16
HEADPHONES JACK UNIT ····· 17
LCD ASSEMBLY····· 18
TOP BOARD ASSEMBLY····· 19
MUSIC REST ASSEMBLY····· 20
KEYBOARD COVER ASSEMBLY····· 21
END BLOCK ASSEMBLY (L,R))····· 22
FLOPPY DISK DRIVE ASSEMBLY ····· 23
KEYBOARD ASSEMBLY ····· 24
BENCH ····· 26
ELECTRICAL PARTS····· 27~40

Notes : DESTINATION ABBREVIATIONS

A :	Australian model	M :	South African model
B :	British model	O :	Chinese model
C :	Canadian model	Q :	South-east Asia model
D :	German model	T :	Taiwan model
E :	European model	U :	U.S.A. model
F :	French model	V :	General export model (110V)
H :	North European model	W :	General export model (220V)
I :	Indonesian model	N,X :	General export model
J :	Japanese model	Y :	Export model

WARNING

Components having special characteristics are marked ⚠ and must be replaced with parts having specification equal to those originally installed.

- The numbers in " QTY " show quantities for each unit.
- The parts with " **- -** " in " PART NO. " are not available as spare parts.
- The mark " } " in the remarks column indicates that these parts are interchangeable.
- The second letter of the shaded ( ) part number is O, not zero.
- The second letter of the shaded ( ) part number is I, not one.

OVERALL ASSEMBLY

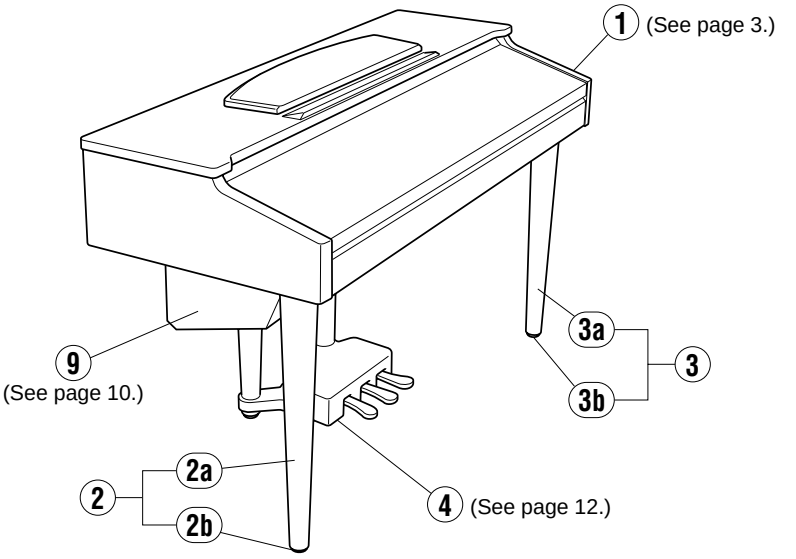

	REF NO.	PART NO.	DESCRIPTION			REMARKS		QTY	RANK
			OVERALL ASSEMBLY			CVP-105			
		- -	Overall Assembly			J	(V332320)		
		- -	Overall Assembly			U	(V332340)		
		- -	Overall Assembly			E	(V332350)		
		- -	Overall Assembly			B	(V332360)		
		- -	Overall Assembly			N	(V332370)		
	1	- -	Main Unit			J	(V334390)		
	1	- -	Main Unit			U	(V334400)		
	1	- -	Main Unit			E,B	(V334410)		
	1	- -	Main Unit			N	(V334430)		
	2	- -	Leg Assembly	FRONT L			(VV62160)		
	2a	**VT480100**	Leg	FRONT-LEFT					14
	2b	**VV606000**	Leg Cap						03
	3	- -	Leg Assembly	FRONT R			(VV62170)		
	3a	**VT480200**	Leg	FRONT-RIGHT					14
	3b	**VV606000**	Leg Cap						03
	4	- -	Leg Pedal Assembly				(V334450)		
*	9	**V3344400**	Speaker Box Assembly						
			ACCESSORIES						
⚠		**VT015700**	AC Cord Set	2P 2.5m 7A		J			05
⚠		**V2916900**	AC Cord Set	2P 2.5m 7A		J			05
⚠		**V3126200**	AC Cord Set	2P 2.5m 7A		J			
⚠		**VT015800**	AC Cord Set	2P 2.44m 7A		U			06
		- -	AC Cord Set	2P 2.44m 7A		U	(V291700)		
		- -	AC Cord Set	2P 2.5 7A		U	(V312640)		
⚠		**VT015900**	AC Cord Set	2P 2.5m 2.5A		E,N			05
⚠		**V2917100**	AC Cord Set	2P 2.5m 2.5A		E,N			05
⚠		**V3126300**	AC Cord Set	2P 2.5m 2.5A		E,N			
⚠		**VT016000**	AC Cord Set	2P 2.5m		B			08
		- -	AC Cord Set	2P 2.5m		B	(V312650)		
		V2289900	Floppy Disk	3.50" 2000K					03
*		**V3236500**	Floppy Disk	3.50"		J			
*		**V3239900**	Floppy Disk	3.50"		U,E,B,N			
		- -	Bench	BC-15 J		J	(VU42180)		
		- -	Bench	YMMA BC-XX		U,N	(V324000)		
		- -	Screw Set				(V355680)		
		V3351400	Japanese Guide Sheet Set			J			
		VT044200	Headphone	P402416N2410		J			09
		VK726100	Connector	CCT5902		N			03
		- -	Screw Set				(V355680)		
		VS608700	Cup Screw	5.0X12 MFZN2BL				30	01
			JIGS						
		TX000670	Rod						

*:New Parts

RANK:Japan only

■ MAIN UNIT 1/2

• Bottom view

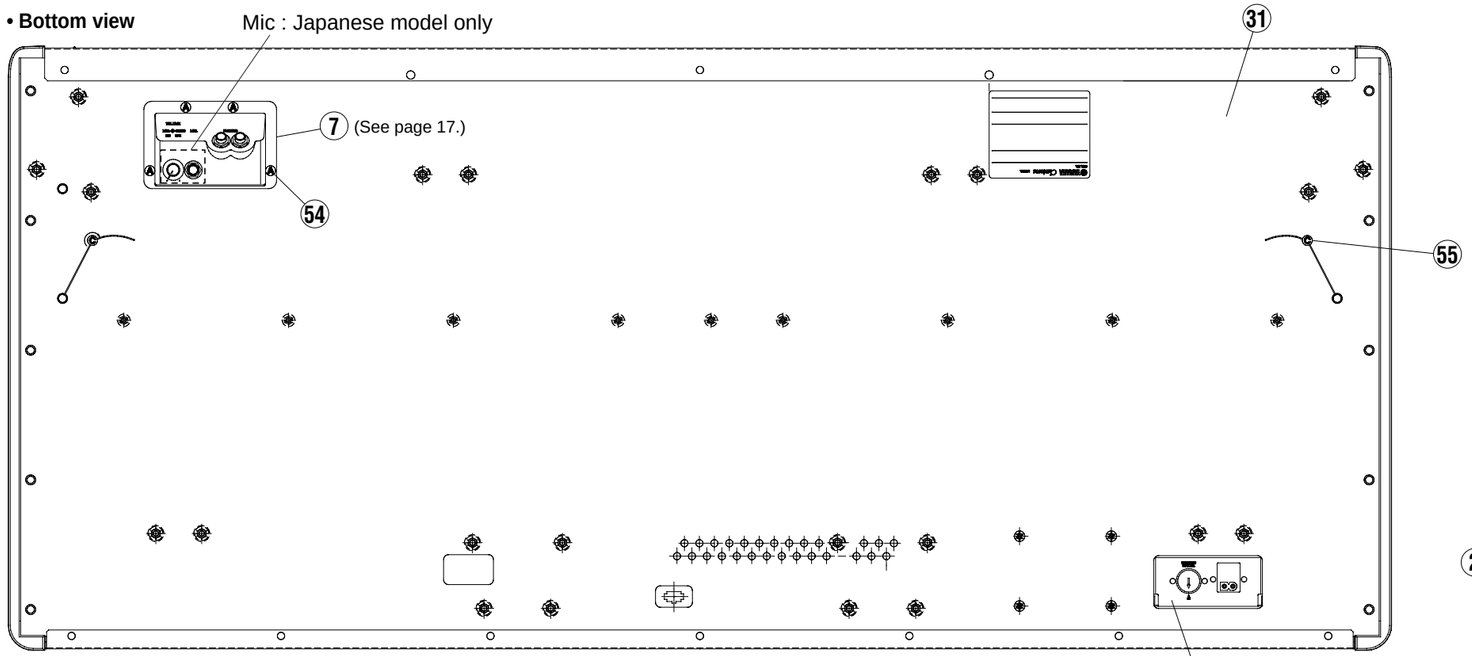

LOCATION	SYMBOL	PART NO.
54	A	EP030250
11	B	EG340210
55	C	EP030240
73	E	VV040700
74	G	EP040230
58	J	EP030340
57	K	EN630230
11	N	VB934000
52	S	VZ057000
59	T	EP030470
12	U	EP030340

• Power transformer (U.S. model)

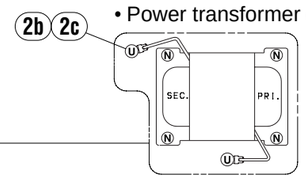

(See page 16.)

4 (See page 15.)

• Top view

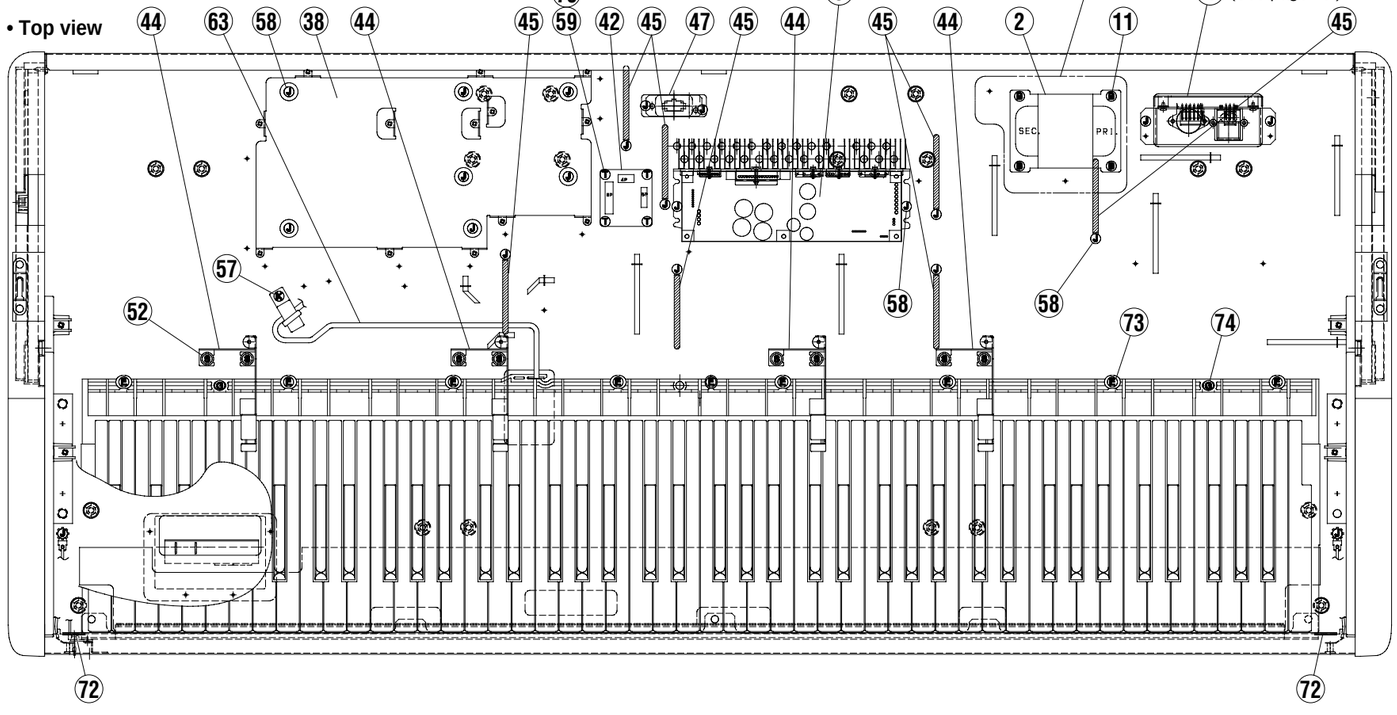

• Side view

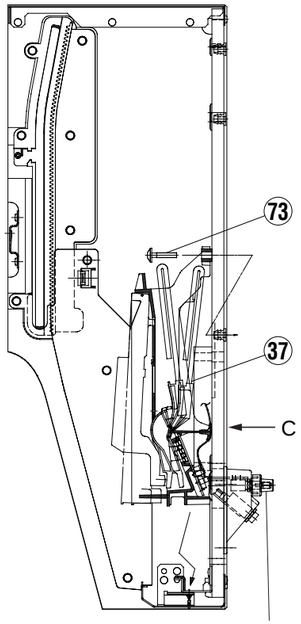

• C view

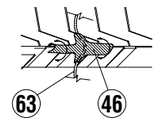

Mic : Japanese model only

	REF NO.	PART NO.	DESCRIPTION			REMARKS		QTY	RANK
			MAIN UNIT			CVP-105 J,U,E,B,N			
		- -	Main Unit			J	(V334390)		
		- -	Main Unit			U	(V334400)		
		- -	Main Unit			E,B	(V334410)		
		- -	Main Unit			N	(V334430)		
	1	- -	Main Unit Sub-assembly				(V334460)		
⚠	2	**XQ429B00**	Power Transformer	GA-60J		J			12
⚠*	2	**VU326500**	Power Transformer Assembly			U			
⚠	2a	**XQ430C00**	Power Transformer	29WP243		U			11
	2b	- -	Connector Assembly			U	(VG29670)	2	
	2c	**EP600130**	Bind Head Tapping Screw-B	3.0X6 MFZN2Y		U		2	01
	2d	**VA121600**	Bushing			U		4	01
	2e	**VA121400**	Spacer			U		4	02
⚠	2	**XQ431B00**	Power Transformer	GA-60 IEC65		E,B			12
⚠*	2	**XQ432C00**	Power Transformer	IEC65 GA-60		N			
	3	**VT144300**	Circuit Board Assembly	MA60		J,U			
	3	**VT144400**	Circuit Board Assembly	MA60		E,B,N			
*	4	**V3886000**	Circuit Board Assembly	FU60		J			10
*	4	**V3886600**	Circuit Board Assembly	FU60		U			10
*	4	**V3888670**	Circuit Board Assembly	FU60		E,B			10
*	4	**V3888700**	Circuit Board Assembly	FU60		N			12
	5	- -	Control Panel Assembly			J,R,B,N	(V332960)		
	5	- -	Control Panel Assembly			U	(V332970)		
	7	- -	Mic. & Phones Unit	(YMMA)		J	(VV92400)		
	7	**VY664900**	Mic. & Phones Unit	(YCJ)		J			17
	7	- -	Headphones Jack Unit	(YCJ)		U,E,B,N	(VT47940)		
	7	- -	Headphones Jack Unit	(YMMA)		U,E,B,N	(VY66500)		
	8	**V2191000**	Cover Assembly	MA		U			07
	9	**VU348800**	FU Cover			U			06
	10	**VB951400**	Graphic Mark	UL		U			03
	11	**EG340210**	Bind Head Screw	4.0X14 MFZN2Y		J,E,B,N		4	01
	11	**VB934000**	Truss Head Screw	4.0X20 MFZN2BL		U		4	01
	12	**EP030340**	Bind Head Tapping Screw-1	3.5X12 MFZN2BL		U		6	01
	14	- -	Connector Assembly	MIC-LF		J	(V385410)		
	15	- -	Connector Assembly	7P-500 KRD-KRD		J	(VK11230)		
	15	- -	Connector Assembly	POWER SUPPLY-LF		U,E,B,N	(V404600)		
	36	- -	Floppy Disk Drive Assembly			J,E,B,N	(V334690)		
	36	- -	Floppy Disk Drive Assembly			U	(V434800)		
	57	**EN630230**	Truss Head Tapping Screw-1	3.5X14 MFZN2Y		J,E,B,N		4	01
	57	**EN630230**	Truss Head Tapping Screw-1	3.5X14 MFZN2Y		U		6	01
*	67	**V3261500**	Connector Assembly	L=900 FDD-SIG		J,E,B,N			
*	67	**V4257400**	Connector Assembly	L=900 FDD-SIG-LF		U			
	68	**VV652000**	Connector Assembly	FDD POWER		J,E,B,N			06
*	68	**V4046000**	Connector Assembly	FDD POWER		U			
		- -	Main Unit Sub-assembly				(V334460)		
	31	- -	Main Box Assembly				(V334980)		
*	32	**V3344700**	Top Board Assembly						
*	33	**V3345400**	Music Rest Assembly						
	34	- -	End Block Assembly	LEFT			(VV60330)		
	35	- -	End Block Assembly	RIGHT			(VV87740)		
	37	**VU431800**	Keyboard Assembly	GH A88 K6					55
	38	- -	Holder, PCB	M			(V328220)		
	39	**V2035100**	Jack Plate						09
*	40a	**AAX07330**	Circuit Board	JACK					
*	40b	**AAX07340**	Circuit Board	EQ					
*	41	**V3150800**	Circuit Board	DM					
*	42	**V3149500**	Circuit Board	NW1					
*	43	**V3345500**	Key Cover Assembly						
	44	**VV666100**	CP Holder Assembly					4	08
	44a	- -	Control Panel Holder	1.2 L			(VV61590)		
	44b	**VY681600**	Felt	C 30X17					03
	44c	**VA121600**	Bushing					2	01
	44d	**VA121400**	Spacer					2	02
	45	**CB817510**	Cord Binder	S-14B				7	03
	46	**VP834600**	Adhesive Tape	12X50				8	02
	47	**VN891200**	Connector Panel						03
	49	**VT215100**	Rack Cover						03
	50	**VA221600**	Bind Head Screw	4.0X10 MFZN2BL				5	01
	51	**EP030310**	Bind Head Tapping Screw-1	3.0X16 MFZN2BL				4	01

*:New Parts RANK:Japan only

	REF NO.	PART NO.	DESCRIPTION			REMARKS		QTY	RANK
	52	**VZ057000**	PW Head Tapping Screw-1	3.5X18-10 MFZN2Y				10	01
	53	**EP600240**	Bind Head Tapping Screw-B	4.0X10 MFZN2BL				8	01
	54	**EP030250**	Bind Head Tapping Screw-1	3.5X14 MFZN2BL				4	01
	55	**EP030240**	Bind Head Tapping Screw-1	3.5X12 MFZN2Y				2	01
	56	**EP600190**	Bind Head Tapping Screw-B	3.0X8 MFZN2BL				17	01
	58	**EP030340**	Bind Head Tapping Screw-1	3.5X12 MFZN2BL				22	01
	59	**EP030470**	Bind Head Tapping Screw-1	3.5X20 MFZN2Y				4	01
	61	- -	Connector Assembly	7P-650 KRD-KRD			(VK11670)		
	62	- -	Connector Assembly	GND (HP)			(VL50740)		
*	63	**V3258400**	Connector Assembly	MK-LF					
	65	- -	Connector Assembly	9P-200 KRD-KRD			(VK10280)		
	66	- -	Connector Assembly	SP			(V326120)		
	69	**VK105200**	Connector Assembly	2P-300 KRD-KRD					03
	70	**CB040950**	Spacer					4	03
	71	- -	Connector Assembly	PU JOINT			(V326110)		
	72	- -	Dust Proof Cloth	22X10X0.35			(V257670)	2	
	73	**VV040700**	Pan Head Screw	5.0X25 MFZN2Y				9	01
	74	**EP040230**	Bind Head Tapping Screw-1	4.0X14 MFZN2Y				2	01

*:New Parts RANK:Japan only

■ MAIN UNIT 2/2

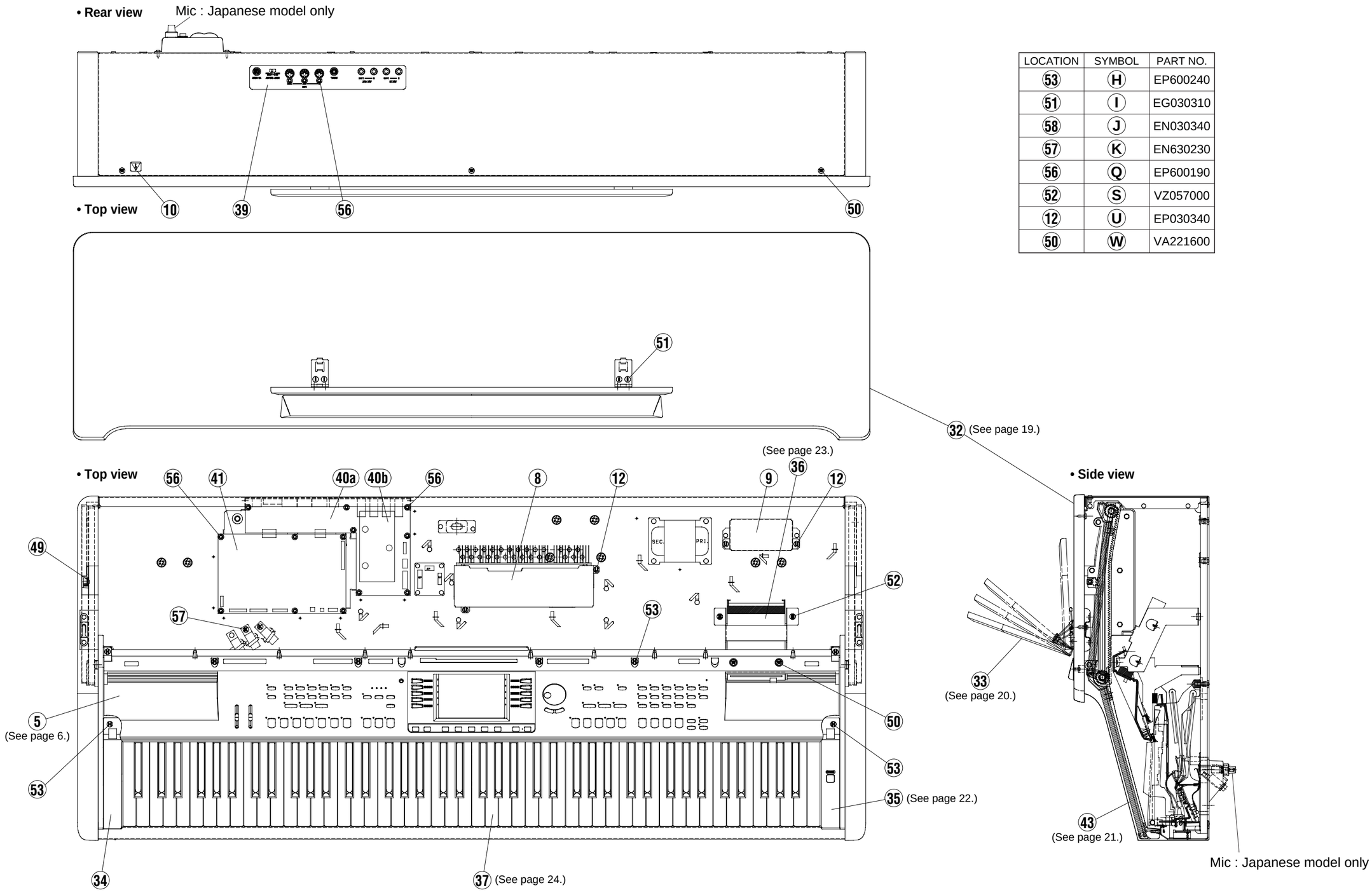

LOCATION	SYMBOL	PART NO.
53	H	EP600240
51	I	EG030310
58	J	EN030340
57	K	EN630230
56	Q	EP600190
52	S	VZ057000
12	U	EP030340
50	W	VA221600

■ CONTROL PANEL ASSEMBLY

• Bottom view

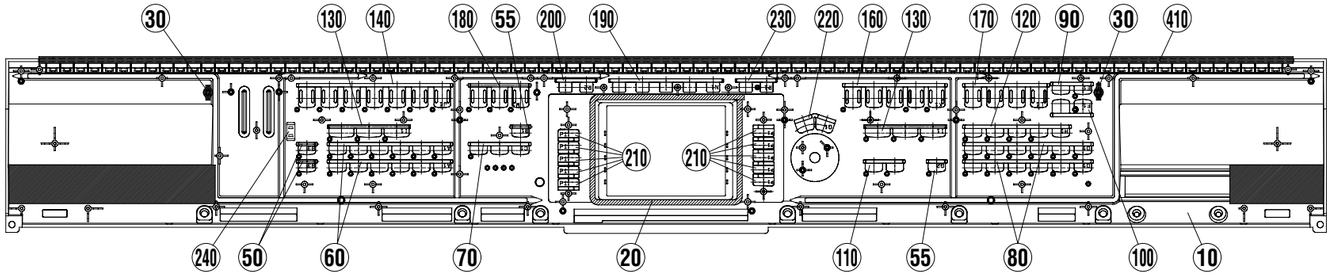

• Bottom view

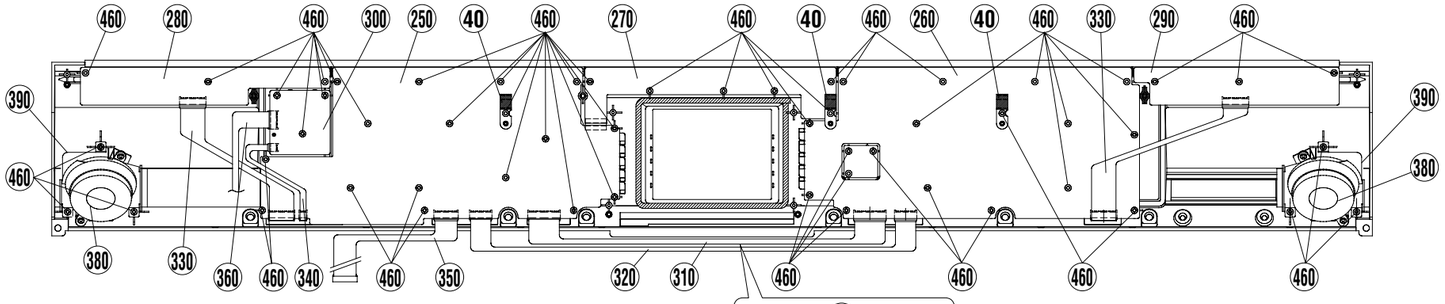

(See page 18.)

For U.S. model

• Bottom view

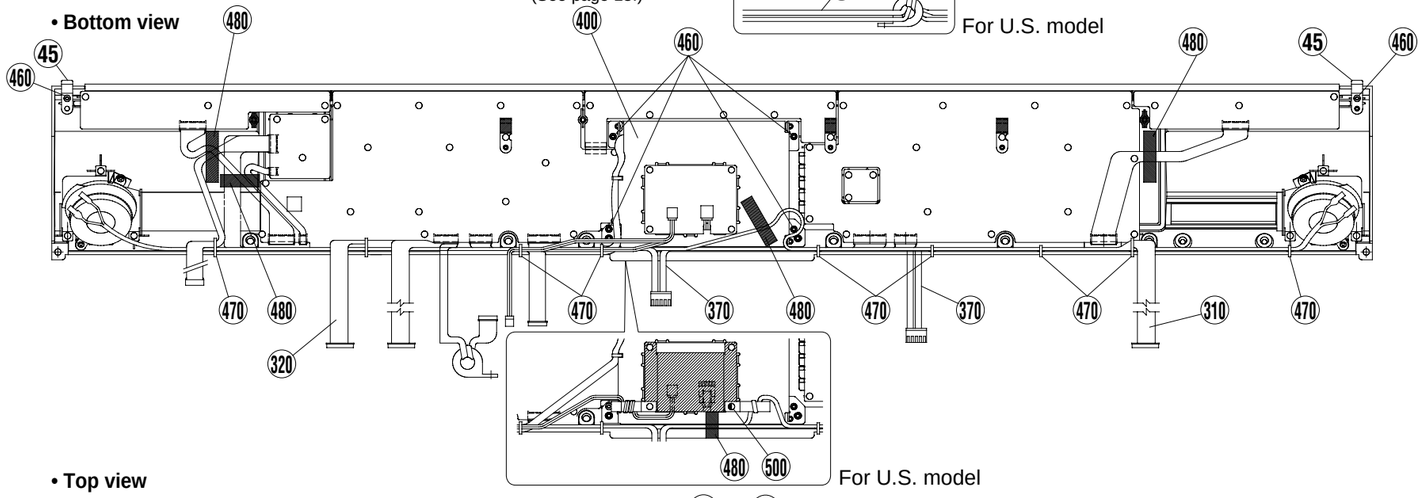

For U.S. model

• Top view

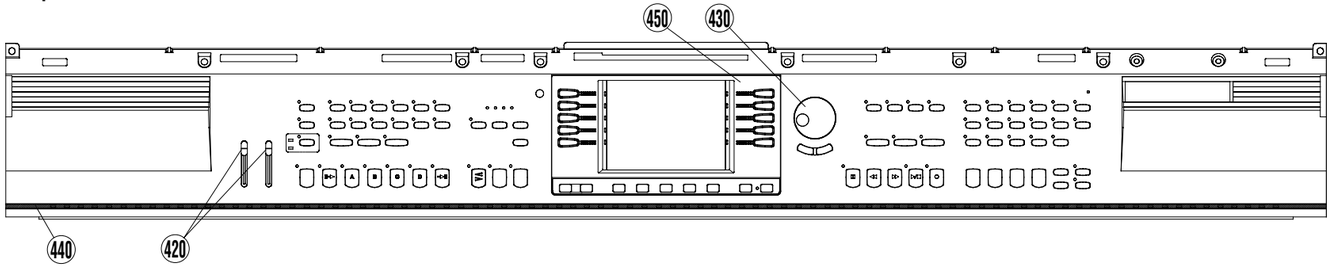

• Side view

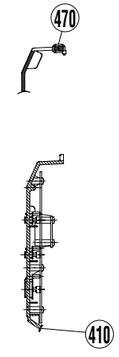

	REF NO.	PART NO.	DESCRIPTION			REMARKS	QTY	RANK
			CONTROL PANEL ASSEMBLY			CVP-105		
		- -	Control Panel Assembly			J,E,B,N (V332960)		
		- -	Control Panel Assembly			U (V332970)		
*	10	**V3330400**	Control Panel					
	20	- -	Dust-proof Foam	LC-3000#2N		(VV61640)		
	30	**VY681600**	Felt	C 30X17			2	03
	40	- -	CP Clamp Assembly	B		(V362600)	3	
	45	- -	CP Clamp Assembly	B		(V362600)	2	
*	50	**V3720000**	Knob	B3 1P		DEMO,HELP	2	
*	55	**V3303300**	Knob	B1 1P		TAP,FUNCTION	2	
*	60	**V3704300**	Knob	A1 6P		STYLE(8 BEAT, ..., DISK/CUSTOM)	2	
*	70	**V3704400**	Knob	C1 3P		METRONOME,TEMPO+/-/RESET		
*	80	**V3704500**	Knob	D1 6P		VOICE(PIANO, ..., XG)	2	
*	90	**V3315800**	Knob	E1 2P		BANK -,REGISTRATION		
*	100	**V3255500**	Knob	F1 2P		BANK +,ONE TOUCH SETTING		
*	110	**V3541800**	Knob	G1 2P		SONG,MIXER		
*	120	**V3303200**	Knob	H1 5P		VOICE(DUAL, ..., EFFECT)		
*	130	**V3704700**	Knob	I1 3P		MUSIC DATABASE, ACMP ASSIST,HARMONY, GUIDE CONTROL(EASY/PLAY, NEXT NOTE,SOUND REPEAT)	2	
*	140	**V3252300**	Knob	J1 7P		AUTO ACCOMPANIMENT (ACMP ON, ..., ENDING)		
*	160	**V3704800**	Knob	K1 5P		SONG CONTROL (PAUSE, ..., REC)		
*	170	**V3704900**	Knob	L1 4P		REGISTRATION(1-4)		
*	180	**V3252400**	Knob	M1 3P		START/STOP(FADE IN/OUT,.. ..., START/STOP)		
*	190	**V3705000**	Knob	N1 5P		LCD select		
*	200	**V3719900**	Knob	R2 2P		PAGE <,PAGE >		
*	210	**V3705100**	Knob	P1 1P		LCD select	10	
*	220	**V3705200**	Knob	Q1 2P		+,-		
*	230	**V3452500**	Knob	R1 2P		EXIT,DIRECT ACCESS		
*	250	**V3149600**	Circuit Board	PNL				
*	260	**V3575600**	Circuit Board	PNR				
	270	**VV880100**	Circuit Board	PNGC				11
*	280	**V3575800**	Circuit Board	PNGL				
*	290	**V3575700**	Circuit Board	PNGR				
*	300	**V3575900**	Circuit Board	MV				
	310	**VK110500**	Connector Assembly	16P-400 KRD-KRD		J,E,B,N		06
	320	**VJ983500**	Connector Assembly	10P-500 KRD-KRD		J,E,B,N		05
	330	**VK103000**	Connector Assembly	12P-200 KRD-KRD			2	03
	340	**VK099800**	Connector Assembly	3P-150 KRD-KRD				04
	350	- -	Connector Assembly	PN-LF		(V332240)		
	350a	- -	Connector Assembly	14P-450 KRD-KRD		(VK11160)		
	350b	**VD947800**	Data Line Filter	ESD-R-25D-B				05
*	350c	**V3122900**	Data Line Filter	NFT-25				
	350d	**CB069250**	Cord Holder	BK-1				01
	360	- -	Connector Assembly	VOL L=550		(V325900)		
	370	- -	Connector Assembly	MON-SP		(V326130)		
	380	**XL455A00**	Speaker	5.0cm 16 ohm 60W		} Monitor	2	07
	380	**XQ524B00**	Speaker	5.0cm 16 ohm 60W		}	2	06
	390	**VV615200**	Monitor Speaker Base	1.0 C			2	05
*	400	**V3330200**	LCD Assembly			J,E,B,N		
*	400	**V3330300**	LCD Assembly			U		
	410	**VU638700**	Felt	MK				05
	420	**VS179900**	Slide Knob			VOLUME	2	03
	430	**VQ664100**	Encoder Knob			DATA dial		02
	440	**VT191300**	Sheet					04
*	450	**V3729600**	LCD Cover					
	460	**EP600250**	Bind Head Tapping Screw-B	3.0X8 MFZN2Y			68	01
	470	**CB069250**	Cord Holder	BK-1			9	01
	480	**VA126100**	Adhesive Tape	12X50			4	03
	490	- -	Connector Assembly	PN-LF		U (V332250)		
	500	**EP600140**	Bind Head Tapping Screw-B	3.0X10 MFZN2BL		U		
	510	**VH871600**	GND Wire	L=150		U	2	04

*:New Parts

RANK:Japan only

MAIN BOX ASSEMBLY

	REF NO.	PART NO.	DESCRIPTION			REMARKS	QTY	RANK
			MAIN BOX ASSEMBLY			CVP-105		
		- -	Main Box Assembly			(V334980)		
*	1	**V3345600**	Arm Assembly L					
*	1a	**V3350000**	Inner Cap Assembly L					
*	2	**V3345700**	Arm Assembly R					
*	2a	**V3350400**	Inner Cap Assembly R					
	3	- -	Front Rail Assembly			(V328320)		
*	3a	**V3284700**	Front Rail					
	3b	**VN637600**	Circuit Board	PL (YCJ)		}		05
	3b	**VU659100**	Circuit Board	PL (YMMA)		}		01
	3c	**EP600230**	Bind Head Tapping Screw-B	3.0X6 MFZN2BL			3	01
	3d	**VH871600**	GND Wire	L=150			2	04
	4	**V0000000**	Keyboard Front Rail Ass'y					10
*	5	**V3345800**	Back Top Rail Assembly					
*	6	**V3345900**	Keybed Assembly					
	7	**EN630190**	Truss Head Tapping Screw-1	3.5X25 MFZN2BL			10	01
	8	**EP030190**	Bind Head Tapping Screw-1	3.5X16 MFZN2Y			10	01
	9	**EP030340**	Bind Head Tapping Screw-1	3.5X12 MFZN2BL			13	01
	10	**VB403600**	Bind Head Screw	4.0X20 MFZN2BL			2	01
	11	- -	Front Rail Angle			(V400730)		
	12	**EP600190**	Bind Head Tapping Screw-B	3.0X8 MFZN2BL				01
	13	**ET900010**	Toothed Lock Washer	3.0 MFZN2Y				

*:New Parts

RANK:Japan only

• Bottom view

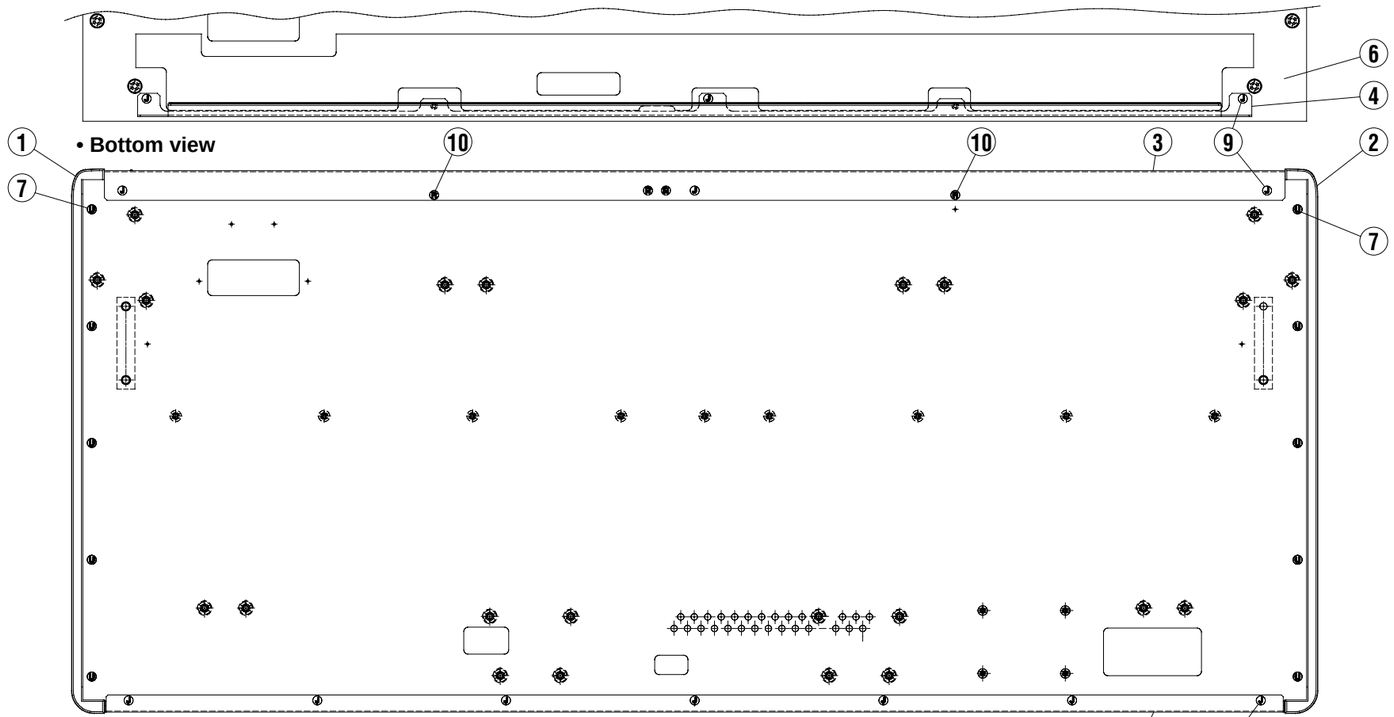

• Top view

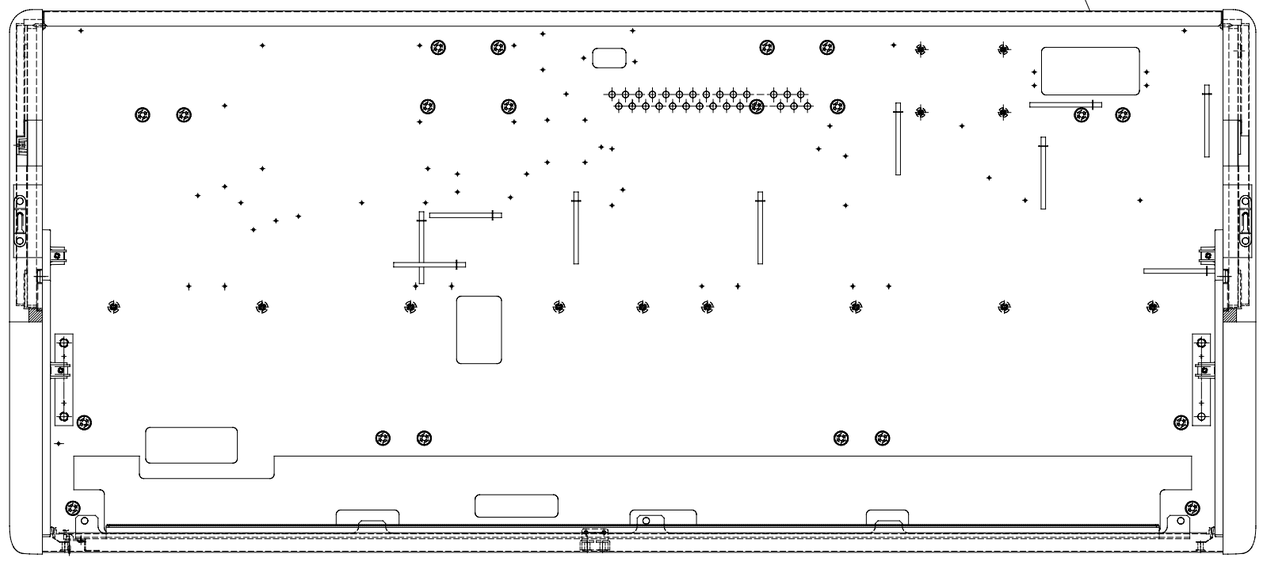

• Right side view

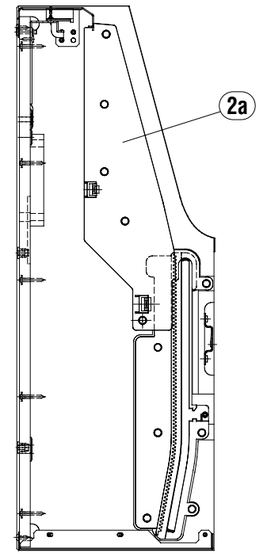

• Front rail assembly

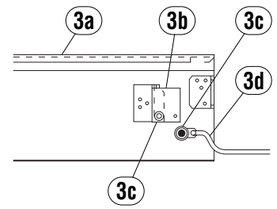

• Left side view

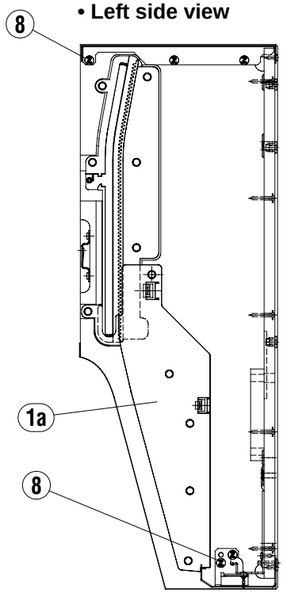

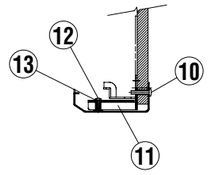

LOCATION	SYMBOL	PART NO.
9	J	EP030340
10	R	VB403600
7	U	EN630190
8	Z	EP030190

■ SPEAKER BOX ASSEMBLY

• Rear view

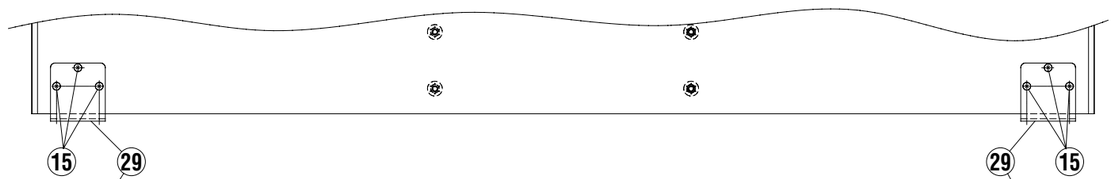

• Top view

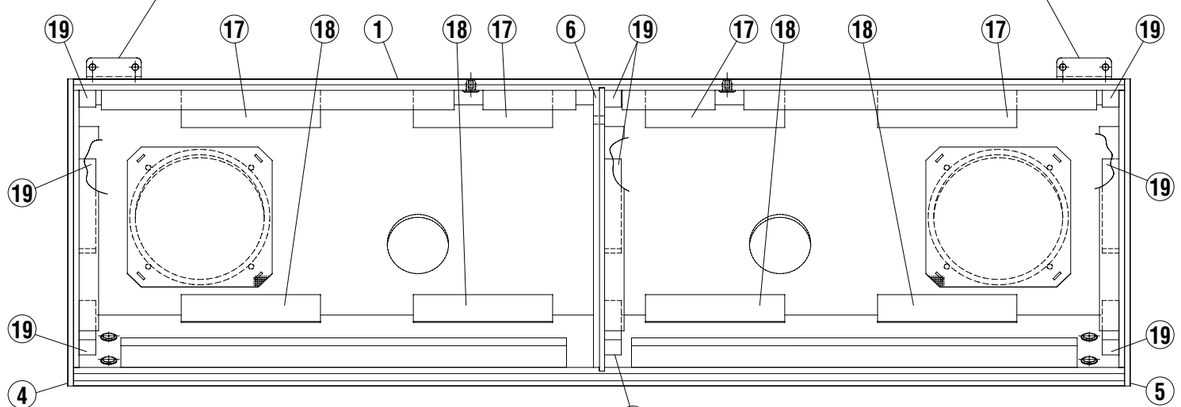

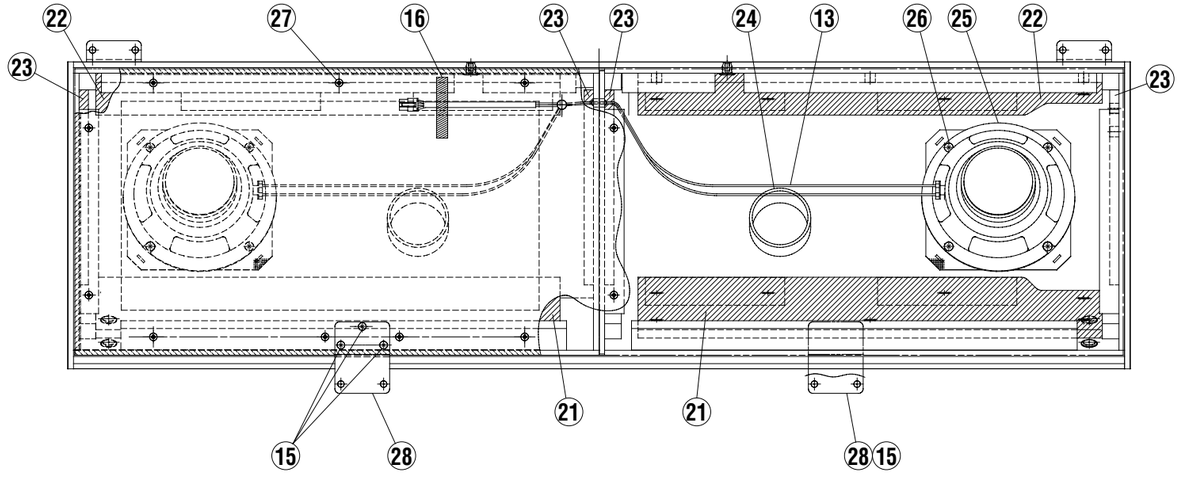

• Side view

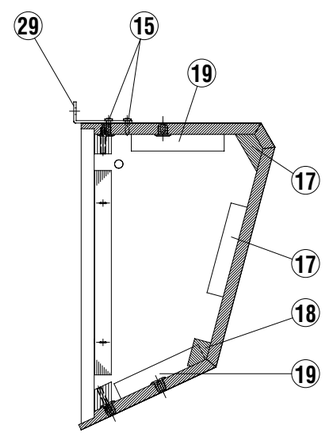

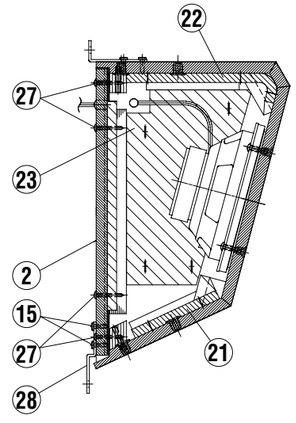

	REF NO.	PART NO.	DESCRIPTION			REMARKS	QTY	RANK
			SPEAKER BOX ASSEMBLY			CVP-105		
*		**V3344400**	Speaker Box Assembly					
	1	**- -**	SP Main Board Assembly			(V345390)		
	2	**- -**	SP Top Board Assembly			(V345400)		
	4	**- -**	SP Side Board L Assembly	LEFT		(V334500)		
	5	**- -**	SP Side Board R Assembly	RIGHT		(V334510)		
	6	**- -**	Partition Board Assembly	SP		(V334530)		
	13	**- -**	Connector Assembly	SP		(VV85370)		
	15	**EP040250**	Bind Head Tapping Screw-1	4.0X16 MFZN2BL			12	01
	16	**- -**	Adhesive Tape	12X70		(VI59810)		
	17	**- -**	Cleat SP1	SP1 18X150		(V345210)	4	
	18	**- -**	Cleat SP2	SP2 18X150		(V345220)	4	
	19	**- -**	Support Cleat			(VT48880)	9	
	20	**- -**	Nail	MAX F25M0 BR 3000		(VS40680)		
	21	**- -**	Felt	F 510X100		(V334350)	2	
	22	**- -**	Felt	R 510X185		(V345260)	2	
	23	**- -**	Felt	S 210X135		(V334340)	4	
	24	**- -**	Port	BL L=50		(V334380)	2	
*	25	**XV746A00**	Speaker	16.0cm 6 ohm 40W			2	
	26	**VB934000**	Truss Head Screw	4.0X20 MFZN2BL			8	01
	27	**VU952600**	Truss Head Tapping Screw-1	3.5X30 MFZN2BL			20	01
	28	**VT458200**	Holder	SPCC T2.6			2	05
	29	**- -**	Speaker Angle			(V345090)	2	

*:New Parts

RANK:Japan only

LEG PEDAL ASSEMBLY

• Bottom view

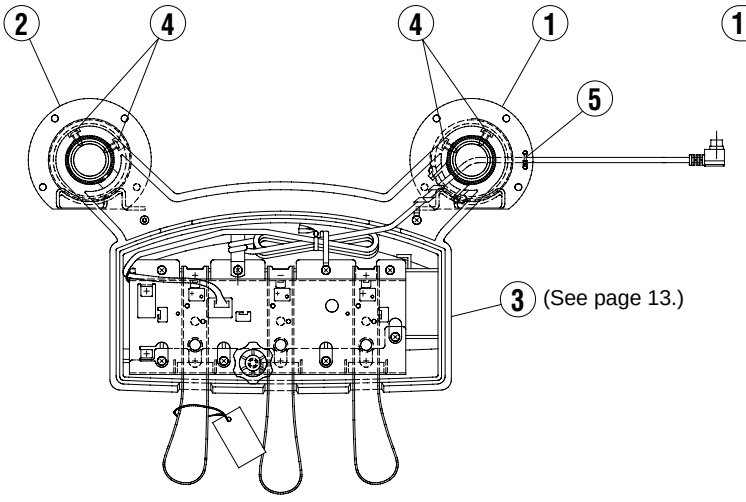

• Side view

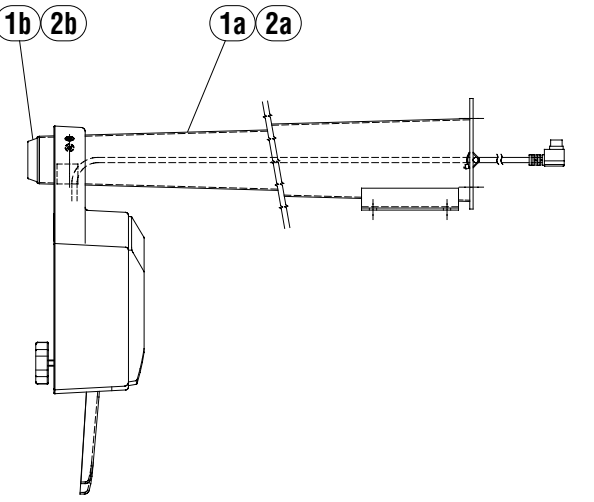

• Top view

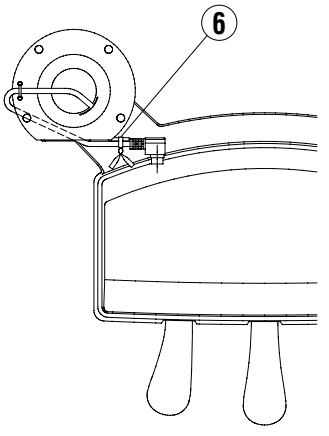

REF NO.	PART NO.	DESCRIPTION			REMARKS	QTY	RANK
		LEG PEDAL ASSEMBLY			CVP-105		
	- -	Leg Pedal Assembly			(V334450)		
* 1	**V3359500**	Leg Assembly	REAR-LEFT				
1a	- -	Leg	BACK-LEFT		(V335960)		
1b	**VV606000**	Leg Cap					03
1c	- -	Adhesive Tape	ECT #590S W=15		(ZL35000)		
2	**VV622000**	Leg Assembly	REAR-RIGHT				16
2a	- -	Leg	BACK-RIGHT		(VV62050)		
2b	**VV606000**	Leg Cap					03
3	- -	Pedal Box Assembly			(V335440)		
4	**VR138400**	Bind Head Tapping Screw-B	4.0X12 MFZN2BL			4	01
5	**CB069250**	Cord Holder	BK-1				01
6	**CB070450**	Cord Binder	L=100				01

*:New Parts

RANK:Japan only

PEDAL BOX ASSEMBLY

• **Bottom view**

• **Side view**

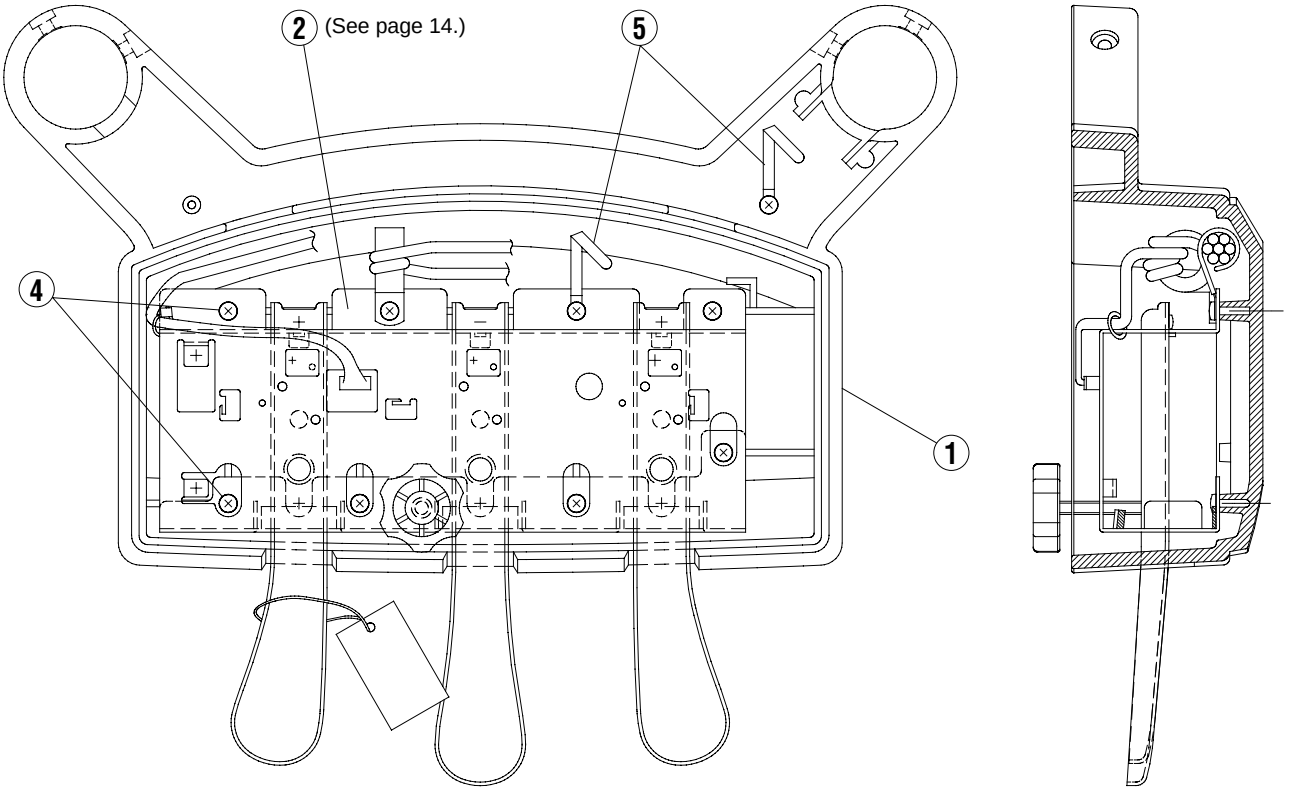

REF NO.	PART NO.	DESCRIPTION			REMARKS	QTY	RANK
		PEDAL BOX ASSEMBLY			CVP-105		
	- -	Pedal Box Assembly			(V335440)		
1	**VV600100**	Pedal Box					13
2	**V0053700**	Pedal Assembly	(I)				18
4	**VR138400**	Bind Head Tapping Screw-B	4.0X12 MFZN2BL			9	01
5	**CB817510**	Cord Binder	S-14B			2	03

∗:New Parts

RANK:Japan only

PEDAL ASSEMBLY

• Top View

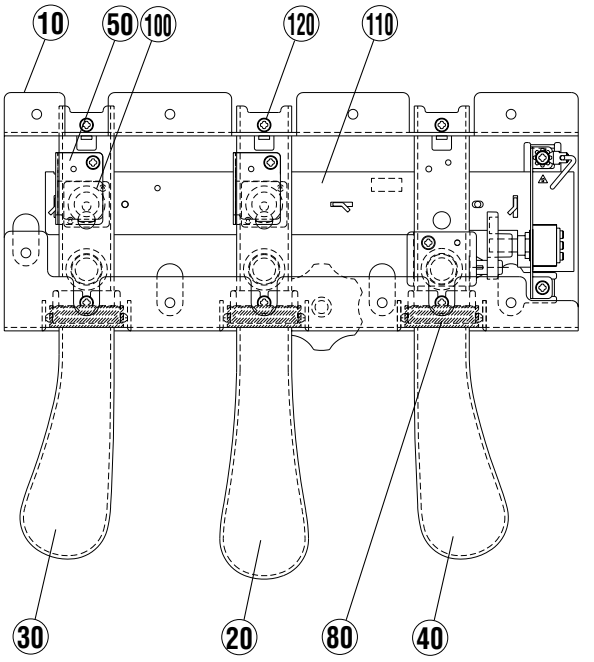

• Side View

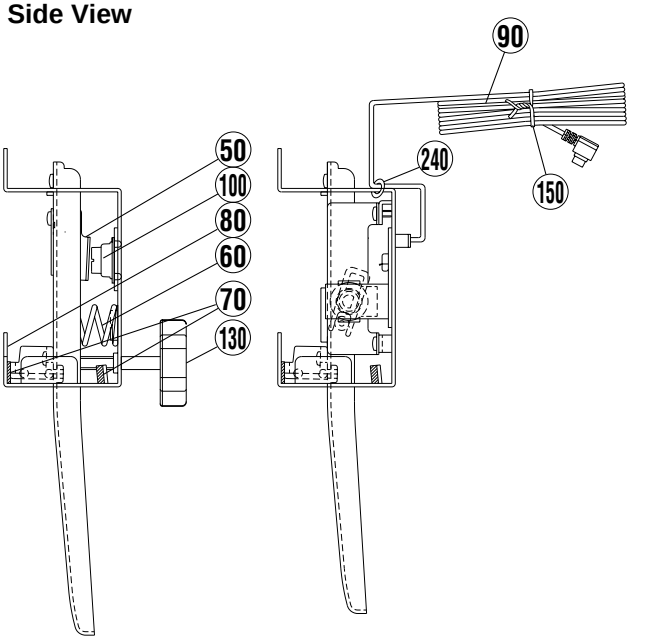

REF NO.	PART NO.	DESCRIPTION			REMARKS	QTY	RANK
		PEDAL ASSEMBLY	(I)		CVP-105		
	V0053700	Pedal Assembly	(I)				18
10	**VU339700**	Pedal Frame					09
20	**VU362000**	Pedal Piece	CENTER		Sostenuto		08
30	**VU362100**	Pedal Piece	LEFT		Soft		08
40	**VU362200**	Pedal Piece	RIGHT		Damper		08
50	**VV433500**	Actuator	PEDAL			3	03
60	**VP348100**	Pedal Spring				3	03
70	**VU346500**	Felt	PA BL			6	03
80	**VU339800**	Shutter				3	03
90	**V0044700**	Connector Assembly	PK-LF				10
100	**VU456000**	Rubber Contact				3	03
110	**V2337300**	Circuit Board	PEDAL				07
120	**EP600190**	Bind Head Tapping Screw-B	3.0X8 MFZN2BL			10	01
130	**VU379700**	Adjuster					02
140	**VE968501**	Grease	G-31KA				
150	**CB033610**	Cord Binder	L=160				01
240	**CB069250**	Cord Holder	BK-1				01

∗:New Parts RANK:Japan only

FU60 ASSEMBLY

• **Front view**

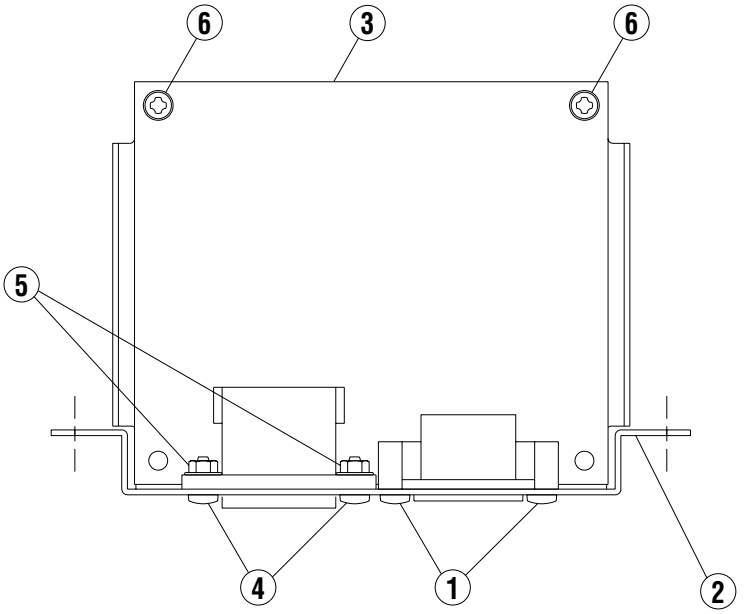

• **Top view**

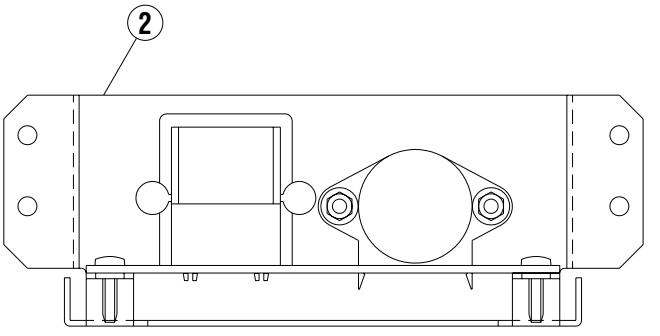

	REF NO.	PART NO.	DESCRIPTION			REMARKS		QTY	RANK
			CIRCUIT BOARD ASSEMBLY	FU60		CVP-105			
*		**V3886000**	Circuit Board Assembly	FU60		J			10
*		**V3886600**	Circuit Board Assembly	FU60		U			10
*		**V3886700**	Circuit Board Assembly	FU60		E,B			10
*		**V3888700**	Circuit Board Assembly	FU60		N			12
	1	**EP600190**	Bind Head Tapping Screw-B	3.0X8 MFZN2BL				2	01
	2	**- -**	Plate, AC Inlet			J,U,E,B	(V383540)		07
	2	**- -**	Plate, AC Inlet			N	(V383560)		08
	3	**- -**	Circuit Board	FU60		J	(VT15140)		
	3	**- -**	Circuit Board	FU60		U	(VT15150)		
	3	**- -**	Circuit Board	FU60		E,B	(VT15160)		
	3	**- -**	Circuit Board	FU60		N	(VT15290)		
	4	**EG330380**	Bind Head Screw	3.0X10 MFZN2BL		N		2	01
	5	**VA211900**	Hexagonal Nut	3.0 MFZN2Y		N		2	01
	6	**VE683000**	Bind Head Tapping Screw-B	3.0X12 MFZN2Y				2	01

*:New Parts

RANK:Japan only

MA60 ASSEMBLY

• **Top view**

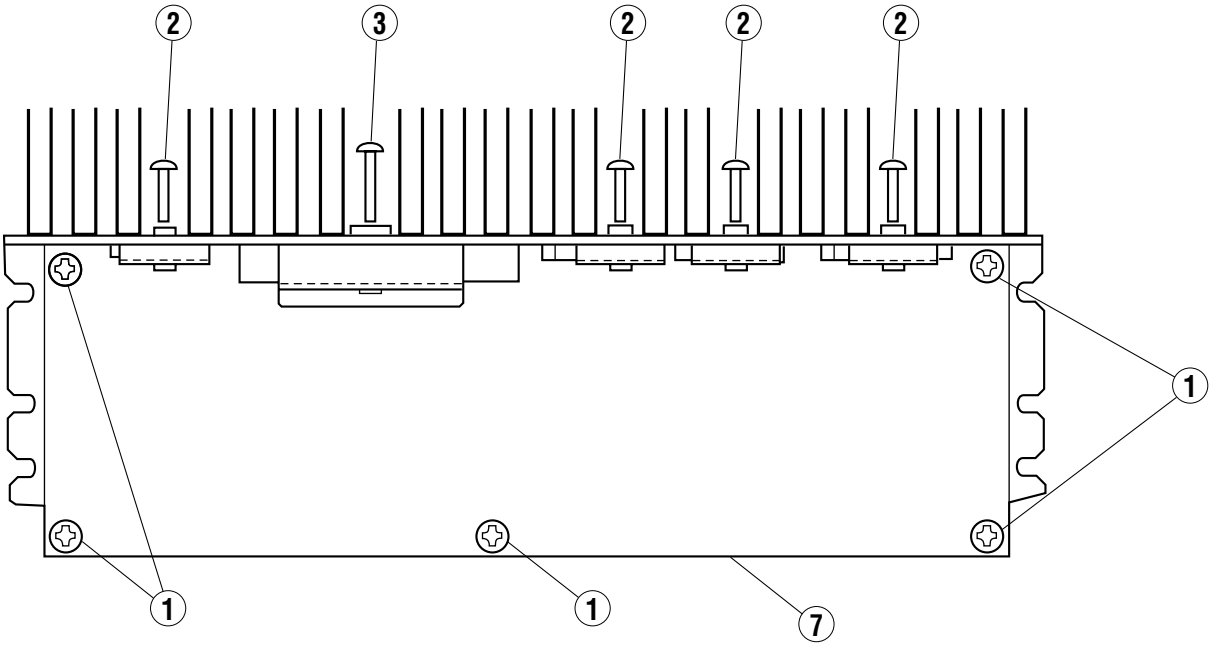

• **Front view**

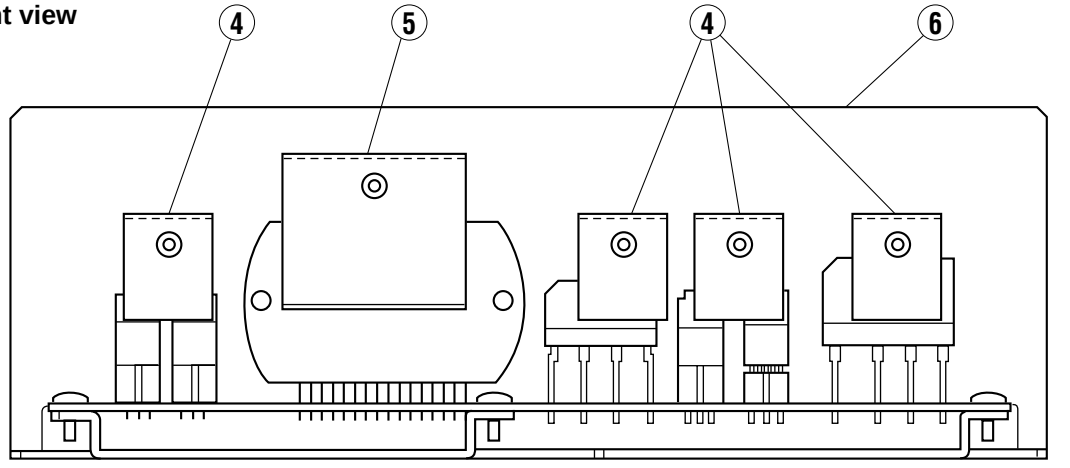

REF NO.	PART NO.	DESCRIPTION			REMARKS	QTY	RANK
		CIRCUIT BOARD ASSEMBLY	MA60		CVP-105		
	VT144300	Circuit Board Assembly	MA60		J,U		
	VT144400	Circuit Board Assembly	MA60		E,B,N		
1	**EP640410**	Bind Head Tapping Screw-B	4.0X8 MFZN2Y			5	01
2	**EP600220**	Bind Head Tapping Screw-B	3.0X10 MFZN2Y			4	01
3	**EP600390**	Bind Head Tapping Screw-B	3.0X16 MFZN2Y				01
4	**VT461100**	Transistor Holder	A				03
5	**VT461200**	Transistor Holder	B				03
6	**VT444300**	Heat Sink					11
7	**- -**	Circuit Board	MA60		J,U (VT14390)		
7	**- -**	Circuit Board	MA60		E,B,N (VT14400)		

∗:New Parts RANK:Japan only

HEADPHONES JACK UNIT

• **Bottom view**

• **Side view**

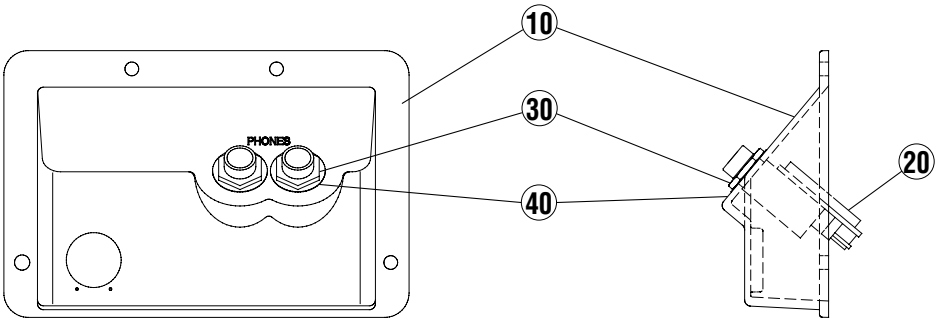

REF NO.	PART NO.	DESCRIPTION			REMARKS	QTY	RANK
		HEADPHONES JACK UNIT			CVP-105 U,E,B,N		
	- -	Headphones Jack Unit	(YCJ)		(VT47940)		
	- -	Headphones Jack Unit	(YMMA)		(VY66500)		
	V2191000	MA Cover Assembly			U		07
10	**VT519000**	Headphones Cover					07
20	**VT478400**	Circuit Board	HP (YCJ)		}		10
20	**VY663700**	Circuit Board	HP (YMMA)		}		08
30	**VB508600**	Hexagonal Nut	12.0 14X2 MFZN2BL			2	01
40	**VJ869400**	Washer	BL			2	02

⁎:New Parts

RANK:Japan only

LCD ASSEMBLY

• Rear view

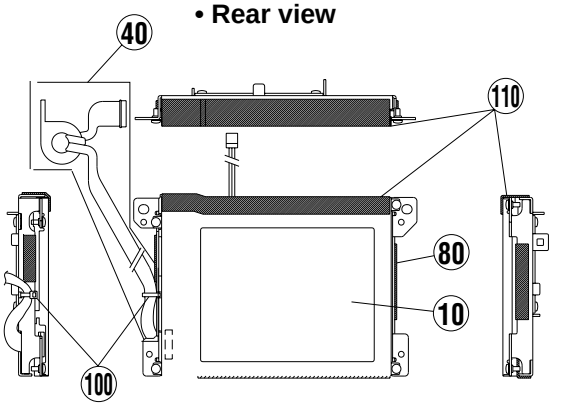

• Side view • Top view • Side view

• Bottom view

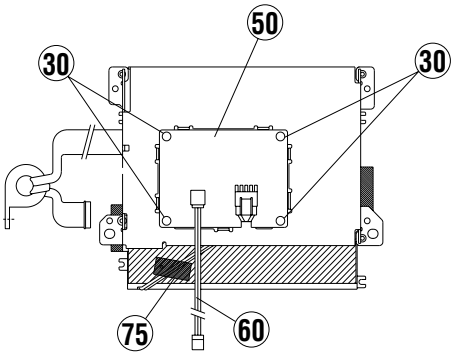

• Bottom view

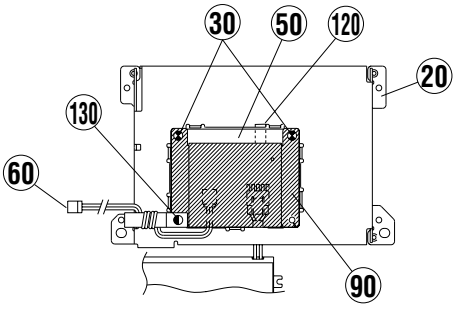

U.S. model only

REF NO.	PART NO.	DESCRIPTION			REMARKS	QTY	RANK
		LCD ASSEMBLY			CVP-105		
*	**V3330200**	LCD Assembly			J,E,B,N		
*	**V3330300**	LCD Assembly			U		
10	**- -**	LCD	EDMMPU3BCF		(V333130)		
20	**VV615000**	Angle Bracket, LCD					08
30	**EP600250**	Bind Head Tapping Screw-B	3.0X8 MFZN2Y			6	01
40	**- -**	Connector Assembly	LCD-LF		(V337640)		
50	**VY638900**	Circuit Board	INV				13
60	**- -**	Connector Assembly	B.LIGHT		J,E,B,N (VV64880)		
60	**- -**	Connector Assembly	BLT-LF		U (VZ01770)		
75	**VA119300**	Adhesive Tape	12X25				01
80	**VY859400**	Insulation Sheet					06
90	**VT361300**	Inverter Cover					06
100	**CB069250**	Cord Holder	BK-1				01
110	**- -**	Tape	AT-80 30X50M		(VY85950)		
120	**- -**	Spacer Cushion	LC3000#2N		(VZ01110)		
130	**EP600140**	Bind Head Tapping Screw-B	3.0X10 MFZN2BL				01

*:New Parts RANK:Japan only

TOP BOARD ASSEMBLY

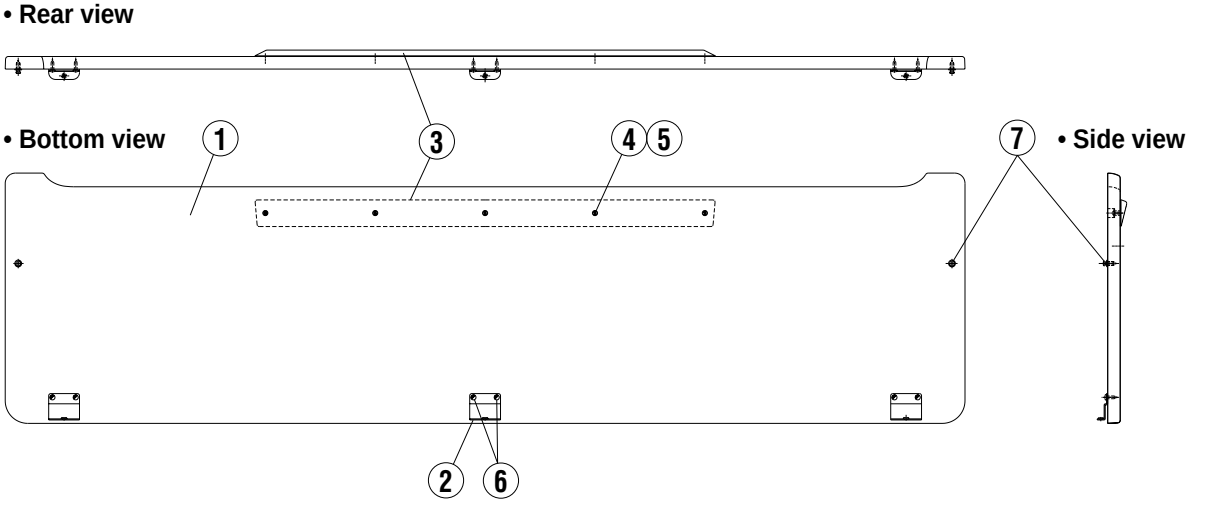

	REF NO.	PART NO.	DESCRIPTION			REMARKS	QTY	RANK
			TOP BOARD ASSEMBLY			CVP-105		
*		**V3344700**	Top Board Assembly					
	1	**- -**	Top Board			(V334060)		
	2	**VY859200**	Holder, Top Board	1.6			3	04
	3	**VY891000**	Stopper Rail, Music Score					12
	4	**EP600270**	Bind Head Tapping Screw-P	3.0X10 MFZN2Y			5	01
	5	**VK287600**	Flat Washer	4.0X12X1.0 MFZN2Y			5	01
	6	**EP040170**	Bind Head Tapping Screw-1	4.0X16 MFZN2Y			6	01
	7	**VV444100**	Screw				2	03

∗:New Parts

RANK:Japan only

MUSIC REST ASSEMBLY

• Side view **• Rear view**

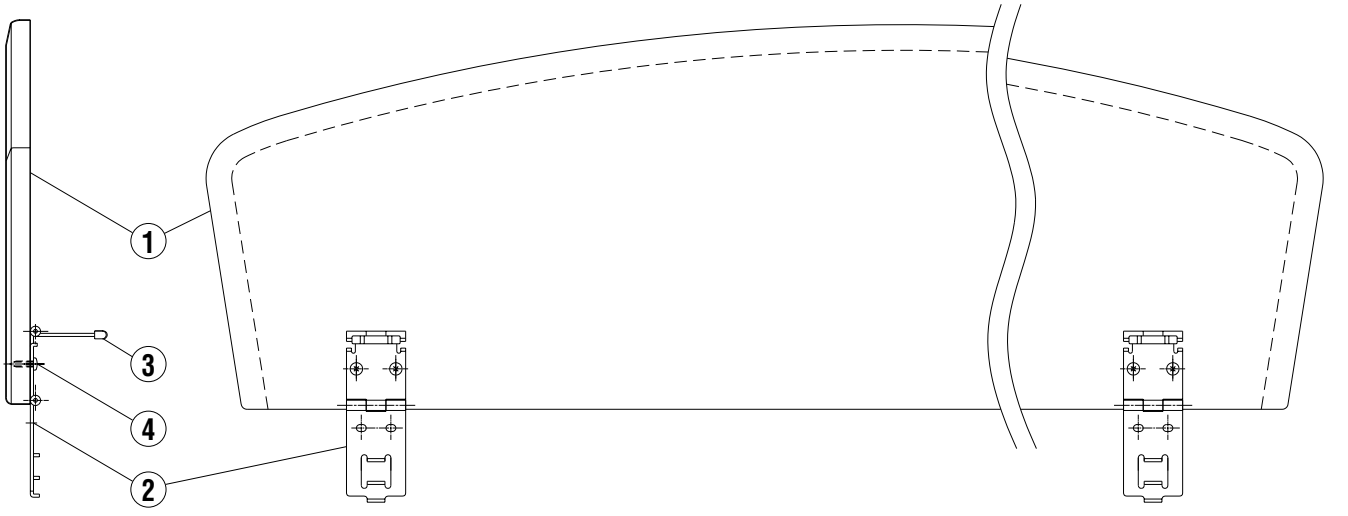

REF NO.	PART NO.	DESCRIPTION			REMARKS	QTY	RANK
		MUSIC REST ASSEMBLY			CVP-105		
*	**V3345400**	Music Rest Assembly					
1	**- -**	Music Rest			(V334610)		
2	**VV603100**	Hinge	3 STEP			2	07
3	**VV965900**	Cap				2	03
4	**20404200**	Bind Head Tapping Screw-1	3.0X10 MFZN2BL			4	

*:New Parts

RANK:Japan only

KEYBOARD COVER ASSEMBLY

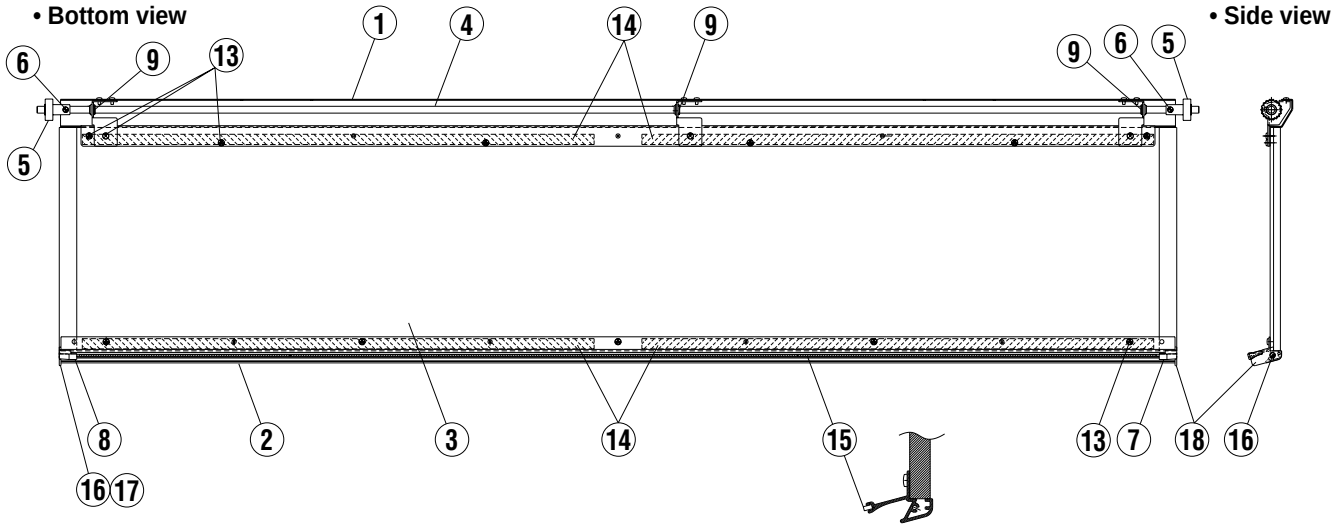

	REF NO.	PART NO.	DESCRIPTION			REMARKS	QTY	RANK
			KEYBOARD COVER ASSEMBLY			CVP-105		
*		**V3345500**	Keyboard Cover Assembly					
	1	**- -**	Sash R Assembly			(V334620)		
	2	**- -**	Painted Sash F			(V332210)		
	3	**- -**	Keyboard Cover Paint			(V363120)		
*	4	**V3317300**	Rod					
*	5	**V3240900**	Pinion Gear				2	
	6	**VB659000**	Bind Head Screw	3.0X8 MFZN2BL			2	01
	7	**VU274900**	Sash Cover	LEFT BL				03
	8	**VU275000**	Sash Cover	RIGHT BL				03
	9	**VS368500**	Bushing				3	03
	13	**EP030320**	Bind Head Tapping Screw-1	3.5X10 MFZN2BL			14	01
	14	**- -**	Adhesive Tape	#500 600X12		(VO02370)	4	
	15	**VU457600**	Cushion	421X2.5X4			3	03
	16	**EP600790**	Flat Head Tapping Screw-B	3.0X8 MFZN2BL			2	01
*	17	**V3323800**	Painted Blind Plate R					
*	18	**V3323900**	Painted Blind Plate L					

*:New Parts

RANK:Japan only

END BLOCK ASSEMBLY

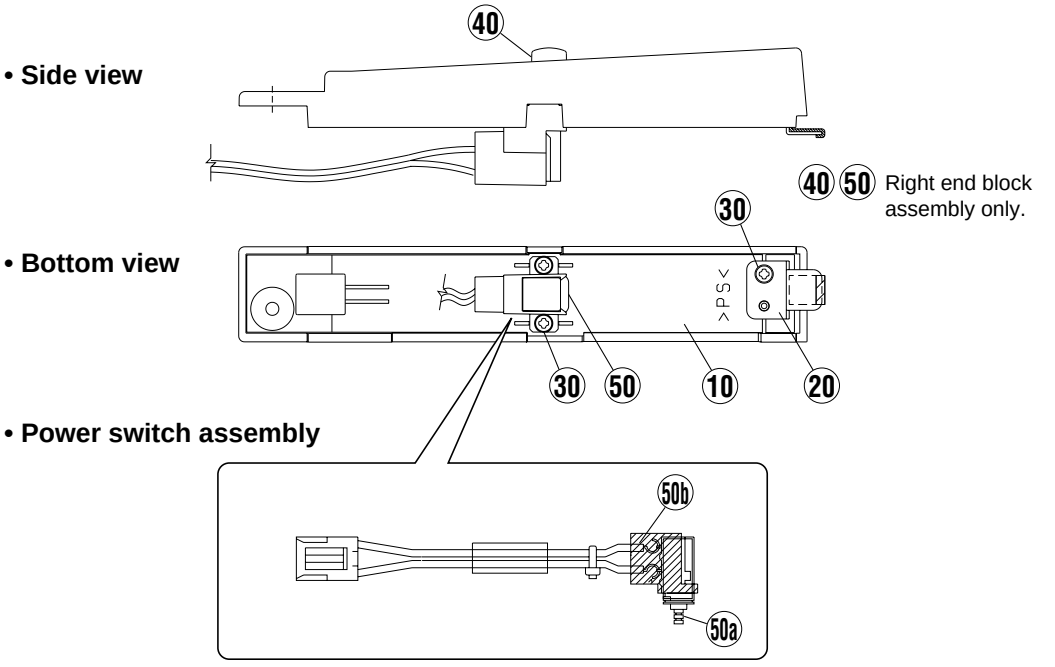

• END BLOCK ASSEMBLY (L)

REF NO.	PART NO.	DESCRIPTION			REMARKS	QTY	RANK
		END BLOCK ASSEMBLY	LEFT		CVP-105		
	- -	End Block Assembly	LEFT		(VV60330)		
10	**VV599700**	End Block	LEFT				06
20	**VL732000**	Holder Assembly					04
30	**EP600190**	Bind Head Tapping Screw-B	3.0X8 MFZN2BL				01

∗:New Parts RANK:Japan only

• END BLOCK ASSEMBLY (R)

REF NO.	PART NO.	DESCRIPTION			REMARKS	QTY	RANK
		END BLOCK ASSEMBLY	RIGHT		CVP-105		
	- -	End Block Assembly	RIGHT		(VV87740)		
10	**VV599600**	End Block	RIGHT				06
20	**VL732000**	Holder Assembly					04
30	**EP600190**	Bind Head Tapping Screw-B	3.0X8 MFZN2BL			3	01
40	**VF663400**	Knob	BL				02
50	**VS353700**	Power Switch Assembly					08
50a	**VC843500**	Push Switch	SDDLB1216A J.U.C.S		POWER swich		03
50b	**CB049980**	Switch Cover	BL				01

∗:New Parts RANK:Japan only

FLOPPY DISK DRIVE ASSEMBLY

• Adhosive tape installation

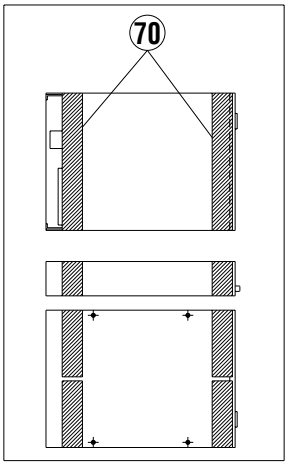

• Top view

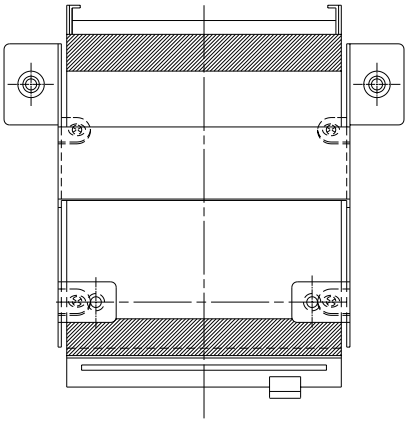

• Side view

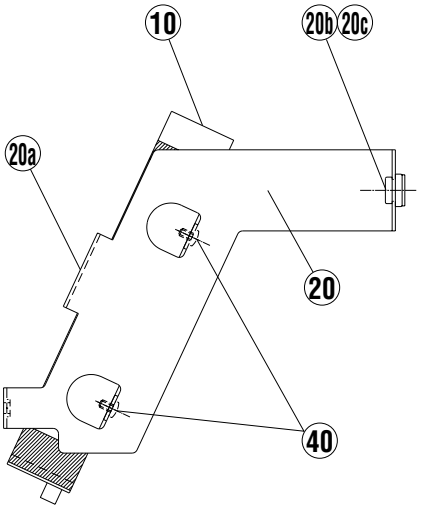

REF NO.	PART NO.	DESCRIPTION			REMARKS	QTY	RANK
		FLOPPY DISK DRIVE ASSEMBLY			CVP-105		
	- -	Floppy Disk Drive Assembly			(V334690)		
10	**V2043400**	Floppy Disk Drive	D359M3				16
20	**VZ337200**	FDD Angle Assembly					09
20a	**VZ117700**	FDD Fixture					07
20b	**VA121600**	Bushing				2	01
20c	**VA121400**	Spacer				2	02
40	**EG330150**	Bind Head Screw	3.0X5 MFZN2Y			4	01
70	- -	Tape	#5 15X30M BL		(V256440)		

∗:New Parts

RANK:Japan only

KEYBOARD ASSEMBLY

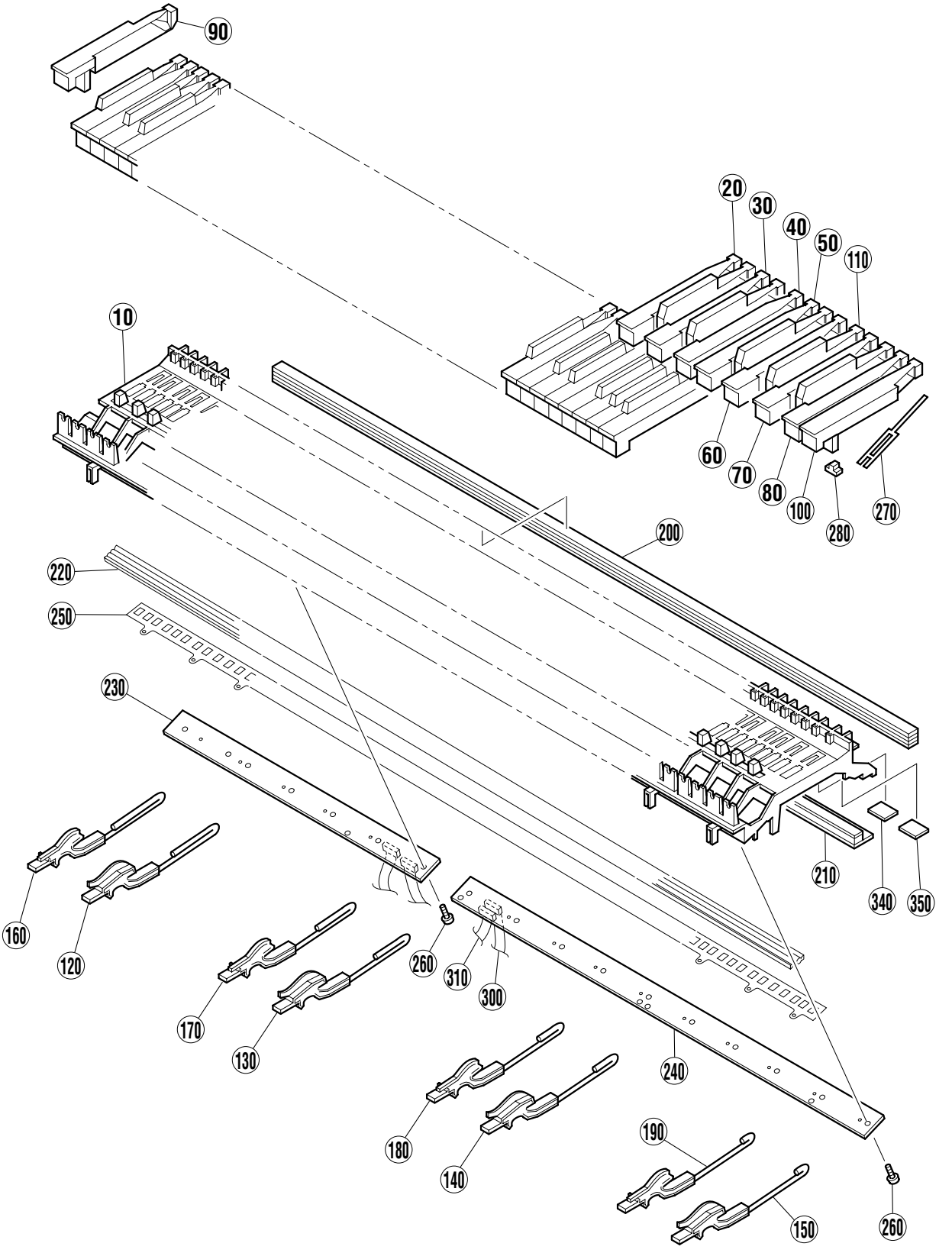

REF NO.	PART NO.	DESCRIPTION			REMARKS	QTY	RANK
		KEYBOARD ASSEMBLY	GH A88 K6		CVP-105		
	VU431800	Keyboard Assembly	GH A88 K6				55
10	**- -**	MK Frame			(VU42210)		
20	**VU101000**	White Key	C			7	05
30	**VU101100**	White Key	D			7	05
40	**VU101200**	White Key	E			7	05
50	**VU101300**	White Key	F			7	05
60	**VU101400**	White Key	G			7	05
70	**VU101500**	White Key	A			7	05
80	**VU101600**	White Key	B			8	05
90	**VU101700**	White Key	A'				05
100	**VU101800**	White Key	C'				05
110	**VU102100**	Black Key				36	05
120	**VU102200**	Hammer, White Key	1		A1, ..., F1	13	06
130	**VU102300**	Hammer, White Key	2		G1, ..., E3	13	06
140	**VU102400**	Hammer, White Key	3		F3, ..., D5	13	06
150	**VU102500**	Hammer, White Key	4		E5, ..., C7	13	06
160	**VU102600**	Hammer, Black Key	1		A#1, ..., F#1	9	06
170	**VU102700**	Hammer, Black Key	2		G#1, ..., D#3	9	06
180	**VU102800**	Hammer, Black Key	3		F#3, ..., C#5	9	06
190	**VU102900**	Hammer, Black Key	4		A#5, ..., A#6	9	06
200	**VU342100**	Stopper	U88				09
210	**VU342200**	Stopper	L88				09
220	**VY693500**	Rubber Contact	GH A88 2M				11
230	**VU342300**	Circuit Board	AEXL88 L				12
240	**VU342400**	Circuit Board	AEXL88 H				13
250	**VU266500**	Insulation Spacer	AEX88				06
260	**VT413400**	Bind Head Tapping Screw-P	3.0X10 MFZN2			17	01
270	**VZ417900**	Spring	GH R BL&WH		}	88	03
270	**V2798500**	Spring	GH R BL&WH		}	88	
280	**VU237500**	Rubber			}	88	03
280	**V2211300**	Rubber 2	2		}	88	03
290	**VU342001**	Grease	PG-661				09
300	**VU341800**	Connector Assembly	9P BLOCK				06
310	**VU341900**	Connector Assembly	12P NOTE				07
320	**- -**	Dry Grease	FL-78A		(VU95710)		
330	**- -**	Protect Wire			(VV03230)		
340	**VV467900**	Stopper Support	A 35.5X20			7	03
350	**VV468100**	Stopper Support	B 24X20			12	03

*:New Parts

RANK:Japan only

BENCH (BC-XX)

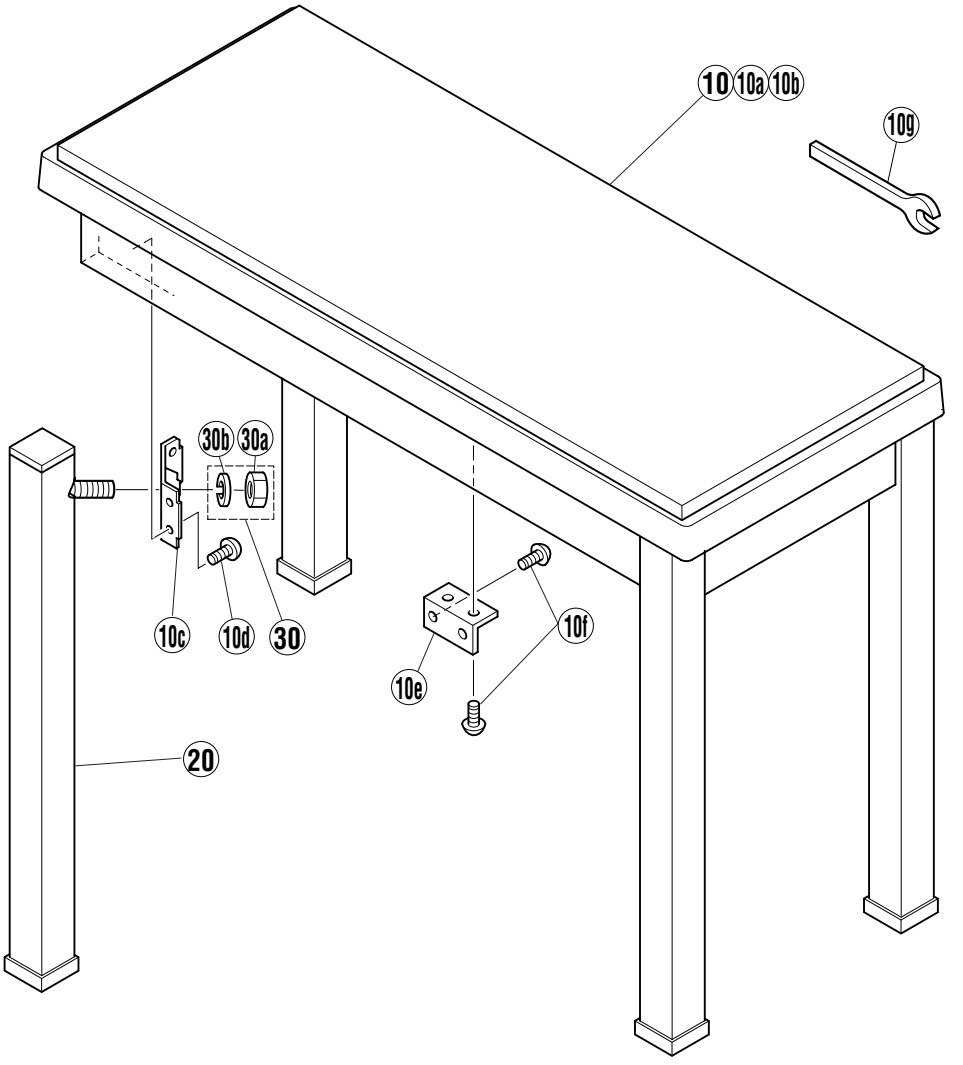

REF NO.	PART NO.	DESCRIPTION			REMARKS	QTY	RANK
	- -	BENCH	YMMA		CVP-105 U,N		
	- -	Bench	YMMA		(V324000)		
* 10	**V3405100**	Bench Board Assembly					
10a	- -	Bench Board Assembly			(V340520)		
10b	- -	Bench Side Frame Unit	BC-XX(YMMA)		(V201900)		
10c	**AA016480**	Holder, Leg				4	02
10d	**EP030170**	Bind Head Tapping Screw-1	3.5X14 MFZN2Y			16	01
10e	**VC969300**	Holder, Bench Board				4	03
10f	**EP030170**	Bind Head Tapping Screw-1	3.5X14 MFZN2Y			16	01
10g	**VT655900**	Wrench					05
20	**V2018800**	Leg Assembly	BC-XX(YMMA)			4	06
30	**VS530500**	Screw Set					03
30a	**EX001060**	Hexagonal Nut	#1 10.0X1.25 MFZN2		(0376125)	4	01
30b	**03765820**	Spring Washer	#2 10.0 MFZN2Y			4	01

*:New Parts RANK:Japan only

ELECTRICAL PARTS

	REF NO.	PART NO.	DESCRIPTION			REMARKS	QTY	RANK
			ELECTRICAL PARTS			CVP-105 J,U,E,B,N		
		VU342400	Circuit Board	AEXL88 H		(XR776C0)		13
		VU342300	Circuit Board	AEXL88 L		(XR775C0)		12
*		**V3150800**	Circuit Board	DM		(XV572C0)		
		- -	Circuit Board	FU60		J (VT15140)(XQ395A0)		
		- -	Circuit Board	FU60		U (VT15150)(XQ395A0)		
		- -	Circuit Board	FU60		E,B (VT15160)(XQ395A0)		
		- -	Circuit Board	FU60		N (VT15290)(XQ395A0)		
		VY663700	Circuit Board	HP (YMMA)		(XT162A0)(XQ795A0)		08
		VT478400	Circuit Board	HP (YCJ)		(XQ795A0)		10
		VY638900	Circuit Board	INV		(XT112A0)		13
*		**AAX07330**	Circuit Board	JACK		(XU370D0)		
*		**AAX07340**	Circuit Board	EQ		(XU370D0)		
		- -	Circuit Board	MA60		J,U (VT14390)(XQ778E0)		
		- -	Circuit Board	MA60		E,B,N (VT14400)(XQ778E0)		
		VY636000	Circuit Board	MIC		J (XT119C0)		14
*		**V3149500**	Circuit Board	NW1		(XT123B0)		
		V2337300	Circuit Board	PEDAL		(XR780B0)		07
		VN637600	Circuit Board	PL (YCJ)		(XL151B0)		05
		VU659100	Circuit Board	PL (YMMA)		(XR898A0)		01
		VV880100	Circuit Board	PNGC		(XS977A0)		11
*		**V3149600**	Circuit Board	PNL		(XV482A0)		
*		**V3575800**	Circuit Board	PNGL		(XV483A0)		
*		**V3575700**	Circuit Board	PNGR		(XV483A0)		
*		**V3575600**	Circuit Board	PNR		(XV483A0)		
*		**V3575900**	Circuit Board	MV		(XV483A0)		
		VU342400	Circuit Board	AEXL88 H		(XR776C0)		13
	CN1	**VB390500**	Connector Base Post	PH- 9P TE		(XR776C0)		03
	CN2	**VB390800**	Connector Base Post	PH-12P TE				01
		VB941200	Diode	1SS133,1SS176				01
		- -	Dust Proof Cloth			(VU45980)		
		VU342300	Circuit Board	AEXL88 L		(XR775C0)		12
		VB941200	Diode	1SS133,1SS176				01
		- -	Dust Proof Cloth			(VU45960)		
	C1	**FG644100**	Ceramic Capacitor-F	0.01 50V Z				01
	-3	**FG644100**	Ceramic Capacitor-F	0.01 50V Z				01
	C5	**VF760000**	Electrolytic Capacitor-KS	100.00 10.0V				01
	CL1	**VI653000**	Ceramic Resonator	CST4.00MGW040				01
	CN1	**VB390400**	Connector Base Post	PH- 8P TE				01
	CN2	**VB390500**	Connector Base Post	PH- 9P TE				03
	CN3	**VB390800**	Connector Base Post	PH- 12P TE				01
	J1	**VD041700**	Jumper Wire	0.55				03
	J2	**VD041700**	Jumper Wire	0.55				03
	KSN2	**XR632A00**	IC	YMZ702-D		KSN2		09
	R1	**HF759100**	Carbon Resistor	1.0M 1/4 J				01
	R2	**HF755100**	Carbon Resistor	100.0 1/4 J				01
	R3	**HF755100**	Carbon Resistor	100.0 1/4 J				01
	R4	**HF756100**	Carbon Resistor	1.0K 1/4 J				01
	RA1	**VU483500**	Resistor Array	RGLD12X103J				01
*		**V3150800**	Circuit Board	DM		(XV572C0)		
		VK863100	IC Socket	DICF-42CS-E			5	03
	C030	**US064100**	Ceramic Capacitor-B (chip)	0.01 50V K				01
	C031	**UF037100**	Electrolytic Cap. (chip)	10 16V				01
	C101	**US064100**	Ceramic Capacitor-B (chip)	0.01 50V K				01
	-107	**US064100**	Ceramic Capacitor-B (chip)	0.01 50V K				01
	C109	**UF037100**	Electrolytic Cap. (chip)	10 16V				01
	C110	**UF037100**	Electrolytic Cap. (chip)	10 16V				01
	C120	**US061270**	Ceramic Capacitor-CH(chip)	27P 50V J				01
	C121	**US061270**	Ceramic Capacitor-CH(chip)	27P 50V J				01
	C123	**US062470**	Ceramic Capacitor-SL(chip)	470P 50V J				01
	C124	**US135100**	Ceramic Capacitor-F (chip)	0.1 16V Z				01
	-127	**US135100**	Ceramic Capacitor-F (chip)	0.1 16V Z				01
	C128	**US064100**	Ceramic Capacitor-B (chip)	0.01 50V K				01
	C200	**US064100**	Ceramic Capacitor-B (chip)	0.01 50V K				01
	-205	**US064100**	Ceramic Capacitor-B (chip)	0.01 50V K				01
	C206	**UF037100**	Electrolytic Cap. (chip)	10 16V				01

*:New Parts

RANK:Japan only

REF NO.	PART NO.	DESCRIPTION			REMARKS	QTY	RANK
C207	**US064100**	Ceramic Capacitor-B (chip)	0.01 50V K				01
-210	**US064100**	Ceramic Capacitor-B (chip)	0.01 50V K				01
C211	**UF037100**	Electrolytic Cap. (chip)	10 16V				01
C212	**US064100**	Ceramic Capacitor-B (chip)	0.01 50V K				01
C213	**US064100**	Ceramic Capacitor-B (chip)	0.01 50V K				01
C216	**UF037100**	Electrolytic Cap. (chip)	10 16V				01
C217	**US064100**	Ceramic Capacitor-B (chip)	0.01 50V K				01
C218	**US061270**	Ceramic Capacitor-CH(chip)	27P 50V J				01
C220	**US064100**	Ceramic Capacitor-B (chip)	0.01 50V K				01
-225	**US064100**	Ceramic Capacitor-B (chip)	0.01 50V K				01
C226	**UF037100**	Electrolytic Cap. (chip)	10 16V				01
C227	**US064100**	Ceramic Capacitor-B (chip)	0.01 50V K				01
-230	**US064100**	Ceramic Capacitor-B (chip)	0.01 50V K				01
C231	**UF037100**	Electrolytic Cap. (chip)	10 16V				01
C232	**US064100**	Ceramic Capacitor-B (chip)	0.01 50V K				01
C233	**US064100**	Ceramic Capacitor-B (chip)	0.01 50V K				01
C240	**US064100**	Ceramic Capacitor-B (chip)	0.01 50V K				01
C250	**US064100**	Ceramic Capacitor-B (chip)	0.01 50V K				01
C260	**US064100**	Ceramic Capacitor-B (chip)	0.01 50V K				01
C270	**UF066100**	Electrolytic Cap. (chip)	1 50V				01
C272	**UF038100**	Electrolytic Cap. (chip)	100 16V				01
C310	**US064100**	Ceramic Capacitor-B (chip)	0.01 50V K				01
C311	**US062100**	Ceramic Capacitor-SL(chip)	100P 50V J				01
-317	**US062100**	Ceramic Capacitor-SL(chip)	100P 50V J				01
C320	**UF038100**	Electrolytic Cap. (chip)	100 16V				01
C321	**US135100**	Ceramic Capacitor-F (chip)	0.1 16V Z				01
C322	**UF038100**	Electrolytic Cap. (chip)	100 16V				01
C323	**US064100**	Ceramic Capacitor-B (chip)	0.01 50V K				01
C330	**US064100**	Ceramic Capacitor-B (chip)	0.01 50V K				01
C331	**US062100**	Ceramic Capacitor-SL(chip)	100P 50V J				01
-334	**US062100**	Ceramic Capacitor-SL(chip)	100P 50V J				01
C350	**UF118330**	Electrolytic Cap. (chip)	330 6.3V UUR0J3				01
C370	**UF038100**	Electrolytic Cap. (chip)	100 16V				01
C400	**US064100**	Ceramic Capacitor-B (chip)	0.01 50V K				01
C410	**US064100**	Ceramic Capacitor-B (chip)	0.01 50V K				01
C420	**US135100**	Ceramic Capacitor-F (chip)	0.1 16V Z				01
C421	**US063100**	Ceramic Capacitor-B (chip)	1000P 50V K				01
C422	**UF057100**	Electrolytic Cap. (chip)	10 35V				01
C423	**UF047100**	Electrolytic Cap. (chip)	10 25V				01
C424	**US064100**	Ceramic Capacitor-B (chip)	0.01 50V K				01
C430	**US064100**	Ceramic Capacitor-B (chip)	0.01 50V K				01
C450	**US062100**	Ceramic Capacitor-SL(chip)	100P 50V J				01
-452	**US062100**	Ceramic Capacitor-SL(chip)	100P 50V J				01
C453	**US064100**	Ceramic Capacitor-B (chip)	0.01 50V K				01
C454	**US062100**	Ceramic Capacitor-SL(chip)	100P 50V J				01
C455	**US064100**	Ceramic Capacitor-B (chip)	0.01 50V K				01
C456	**UF148100**	Electrolytic Cap. (chip)	100 25V UUR1E1				01
C500	**US064100**	Ceramic Capacitor-B (chip)	0.01 50V K				01
C501	**UF037100**	Electrolytic Cap. (chip)	10 16V				01
C510	**US064100**	Ceramic Capacitor-B (chip)	0.01 50V K				01
C511	**US064100**	Ceramic Capacitor-B (chip)	0.01 50V K				01
C512	**VI055000**	Super Cap.	0.1 F 5.5V FYD0H				04
C520	**US064100**	Ceramic Capacitor-B (chip)	0.01 50V K				01
C530	**US064100**	Ceramic Capacitor-B (chip)	0.01 50V K				01
C540	**US064100**	Ceramic Capacitor-B (chip)	0.01 50V K				01
C560	**US064100**	Ceramic Capacitor-B (chip)	0.01 50V K				01
C600	**US064100**	Ceramic Capacitor-B (chip)	0.01 50V K				01
C601	**UF038100**	Electrolytic Cap. (chip)	100 16V				01
C610	**US064100**	Ceramic Capacitor-B (chip)	0.01 50V K				01
C620	**US064100**	Ceramic Capacitor-B (chip)	0.01 50V K				01
C660	**US064100**	Ceramic Capacitor-B (chip)	0.01 50V K				01
C670	**US062100**	Ceramic Capacitor-SL(chip)	100P 50V J				01
-673	**US062100**	Ceramic Capacitor-SL(chip)	100P 50V J				01
C674	**US064100**	Ceramic Capacitor-B (chip)	0.01 50V K				01
C675	**US062100**	Ceramic Capacitor-SL(chip)	100P 50V J				01
-677	**US062100**	Ceramic Capacitor-SL(chip)	100P 50V J				01
C678	**US064100**	Ceramic Capacitor-B (chip)	0.01 50V K				01
C700	**US064100**	Ceramic Capacitor-B (chip)	0.01 50V K				01
C701	**US064100**	Ceramic Capacitor-B (chip)	0.01 50V K				01
C702	**US061100**	Ceramic Capacitor-CH(chip)	10P 50V D				01

∗:New Parts RANK:Japan only

	REF NO.	PART NO.	DESCRIPTION			REMARKS	QTY	RANK
	C703	**US061100**	Ceramic Capacitor-CH(chip)	10P 50V D				01
	C704	**UF037100**	Electrolytic Cap. (chip)	10 16V				01
	C800	**UF038100**	Electrolytic Cap. (chip)	100 16V				01
	C801	**UF037100**	Electrolytic Cap. (chip)	10 16V				01
	C802	**UF037100**	Electrolytic Cap. (chip)	10 16V				01
	C803	**UF046470**	Electrolytic Cap. (chip)	4.7 25V				01
	C804	**UF037100**	Electrolytic Cap. (chip)	10 16V				01
	C805	**UF037100**	Electrolytic Cap. (chip)	10 16V				01
	C806	**UF046470**	Electrolytic Cap. (chip)	4.7 25V				01
	C807	**US135100**	Ceramic Capacitor-F (chip)	0.1 16V Z				01
	-809	**US135100**	Ceramic Capacitor-F (chip)	0.1 16V Z				01
	C810	**US044220**	Ceramic Capacitor-B (chip)	0.022 25V K				01
	C812	**US044220**	Ceramic Capacitor-B (chip)	0.022 25V K				01
	CL400	**VV905100**	Ceramic Resonator	CSTCC4.00MG0H6-TC				01
	CL600	**V2330600**	Ceramic Resonator	CSTCC10.0MG0H6-TC				01
*	CL700	**V2370300**	Ceramic Resonator	16.00M CSACV16.00				
	CN310	**VV878700**	Connector Receptacle	1.25FJ 15P TE				01
	CN320	**VZ998500**	Connector Receptacle	1.25FJ 11P TE				01
	CN330	**VB390400**	Connector Base Post	PH 8P TE				01
	CN350	**VB390300**	Connector Base Post	PH 7P TE				01
	CN370	**LB918020**	Base Post Connector	XH 2P TE				01
	CN450	**VE352600**	Connector Base Post	PH-14P TE				01
	CN670	**VV878100**	Connector Base Post	DF13-14P-1.25DSA				04
	CN750	**VQ391300**	Connector	34P TE				03
	D030	**VB493900**	Diode	MA221				01
	D420	**VB493900**	Diode	MA221				01
	D421	**VB493900**	Diode	MA221				01
	D510	**VB493900**	Diode	MA221				01
	D511	**VB493900**	Diode	MA221				01
	IC030	**XL112A00**	IC	SN74HC132NS-R		NAND		03
*	IC100	**XV664100**	IC	HD6437043AF09		CPU		
	IC200	**XU947C00**	IC	HG73C205AFD		SWX00B		09
	IC220	**XU947C00**	IC	HG73C205AFD		SWX00B		09
*	IC240	**XV657100**	IC	MB8502F016FA-12PS		WAVE 1 MASK ROM 32M		
*	IC250	**XV658100**	IC	MB8502F016FA-12PS		WAVE 2 MASK ROM 32M		
	IC260	**XU462A00**	IC	MSM514260C-60TS-K		DRAM 4M		08
	IC270	**XS516A00**	IC	UPC2933T-E1		REGULATOR +3.3V		03
*	IC400	**XV513A00**	IC	MSM82C51A-2GS-K		SEREAL CONTROL		
	IC410	**XC724A00**	IC	SN74HC02NSR		NOR		01
	IC420	**XU369A00**	IC	HD14069UBFP-EL		INVERTER		01
	IC430	**XC723A00**	IC	SN74HCU04NSR		INVERTER		01
	IC500	**XV145A00**	IC	KM416C1200CJ-6		DRAM 16M		12
	IC500	**XV380A00**	IC	GM71C18163CJ-6(T)				12
	IC510	**XS681A00**	IC	M5M51008BFP-70LLT		SRAM 1M		11
*	IC510	**XV378A00**	IC	LP621024CM-70LL				
*	IC510	**XV976A00**	IC	M5M51008CFP-70H				
*	IC520	**XV654100**	IC	MX23C1610PC-10		MASK ROM MAIN L 16M		
*	IC530	**XV655100**	IC	MX23C1610PC-10		MASK ROM MAIN H 16M		
*	IC540	**XV656100**	IC	KM23C32000C		MASK ROM STYLE 32M		
	IC560	**XE462A00**	IC	TC74HC139AF-TP1		DEMULTIPLEXER		02
	IC600	**XQ595A00**	IC	SED1335F0B		LCDC		08
	IC610	**XN279C00**	IC	M5M5256DFP-70LL		SRAM 256K		07
	IC610	**XT090A00**	IC	SRM2B256SLMX70				07
	IC610	**XV411A00**	IC	W24258S-70LE-EL10				07
	IC620	**XC723A00**	IC	SN74HCU04NSR		INVERTER		01
	IC700	**XI939A00**	IC	HD63266F		FDC		09
	IC800	**XU829A00**	IC	PCM1716E		DAC		06
	IC820	**XJ598A00**	IC	NJM78L05UA		REGULATOR +5V		02
	L310	**VR243700**	Chip Inductance	56U LEM2520 T 560J				01
	-312	**VR243700**	Chip Inductance	56U LEM2520 T 560J				01
	L450	**VR243700**	Chip Inductance	56U LEM2520 T 560J				01
	L451	**VR243700**	Chip Inductance	56U LEM2520 T 560J				01
	L750	**VQ724900**	Chip Inductance	BK2125HM601-T				01
	-754	**VQ724900**	Chip Inductance	BK2125HM601-T				01
	R001	**RD355100**	Carbon Resistor (chip)	100 63M J				01
	-022	**RD355100**	Carbon Resistor (chip)	100 63M J				01
	R030	**RD357100**	Carbon Resistor (chip)	10K 63M J				01
	R031	**RD357220**	Carbon Resistor (chip)	22K 63M J				01
	R032	**RD356100**	Carbon Resistor (chip)	1.0K 63M J				01
	R033	**RD358470**	Carbon Resistor (chip)	470K 63M J				01

*:New Parts

RANK:Japan only

REF NO.	PART NO.	DESCRIPTION			REMARKS	QTY	RANK
R034	**RD357100**	Carbon Resistor (chip)	10K 63M J				01
R035	**RD357220**	Carbon Resistor (chip)	22K 63M J				01
R036	**RD356820**	Carbon Resistor (chip)	8.2K 63M J				01
R037	**RD358470**	Carbon Resistor (chip)	470K 63M J				01
R050	**RD355100**	Carbon Resistor (chip)	100 63M J				01
-081	**RD355100**	Carbon Resistor (chip)	100 63M J				01
R100	**RD355100**	Carbon Resistor (chip)	100 63M J				01
-110	**RD355100**	Carbon Resistor (chip)	100 63M J				01
R111	**RD355680**	Carbon Resistor (chip)	680 63M J				01
R112	**RD355220**	Carbon Resistor (chip)	220 63M J				01
R113	**RD356330**	Carbon Resistor (chip)	3.3K 63M J				01
R114	**RD356150**	Carbon Resistor (chip)	1.5K 63M J				01
R115	**RD356100**	Carbon Resistor (chip)	1.0K 63M J				01
R116	**RD356100**	Carbon Resistor (chip)	1.0K 63M J				01
R117	**RD355100**	Carbon Resistor (chip)	100 63M J				01
-119	**RD355100**	Carbon Resistor (chip)	100 63M J				01
R120	**RD356100**	Carbon Resistor (chip)	1.0K 63M J				01
R150	**RD357470**	Carbon Resistor (chip)	47K 63M J				01
-161	**RD357470**	Carbon Resistor (chip)	47K 63M J				01
R164	**RD357470**	Carbon Resistor (chip)	47K 63M J				01
R165	**RD357470**	Carbon Resistor (chip)	47K 63M J				01
R166	**RD356470**	Carbon Resistor (chip)	4.7K 63M J				01
R167	**RD357470**	Carbon Resistor (chip)	47K 63M J				01
R168	**RD357470**	Carbon Resistor (chip)	47K 63M J				01
R169	**RD357100**	Carbon Resistor (chip)	10K 63M J				01
-171	**RD357100**	Carbon Resistor (chip)	10K 63M J				01
R172	**RD357470**	Carbon Resistor (chip)	47K 63M J				01
-178	**RD357470**	Carbon Resistor (chip)	47K 63M J				01
R179	**RD350000**	Carbon Resistor (chip)	0 63M J				01
R180	**RD357100**	Carbon Resistor (chip)	10K 63M J				01
R181	**RD355220**	Carbon Resistor (chip)	220 63M J				01
R182	**RD357470**	Carbon Resistor (chip)	47K 63M J				01
R190	**RD356270**	Carbon Resistor (chip)	2.7K 63M J				01
R201	**RD357470**	Carbon Resistor (chip)	47K 63M J				01
R202	**RD354470**	Carbon Resistor (chip)	47 63M J				11
R203	**RD355100**	Carbon Resistor (chip)	100 63M J				01
R227	**RD357470**	Carbon Resistor (chip)	47K 63M J				01
R228	**RD354470**	Carbon Resistor (chip)	47 63M J				01
R310	**RD355100**	Carbon Resistor (chip)	100 63M J				01
-313	**RD355100**	Carbon Resistor (chip)	100 63M J				01
R314	**RD357470**	Carbon Resistor (chip)	47K 63M J				01
-316	**RD357470**	Carbon Resistor (chip)	47K 63M J				01
R317	**RD358470**	Carbon Resistor (chip)	470K 63M J				01
R320	**RD355100**	Carbon Resistor (chip)	100 63M J				01
R330	**RD355100**	Carbon Resistor (chip)	100 63M J				01
-333	**RD355100**	Carbon Resistor (chip)	100 63M J				01
R410	**RD355100**	Carbon Resistor (chip)	100 63M J				01
R420	**RD357100**	Carbon Resistor (chip)	10K 63M J				01
R421	**RD355100**	Carbon Resistor (chip)	100Ω				01
R422	**RD356100**	Carbon Resistor (chip)	1.0KΩ				01
R423	**RD357100**	Carbon Resistor (chip)	10KΩ				01
R451	**RD355100**	Carbon Resistor (chip)	100 63M J				01
-453	**RD355100**	Carbon Resistor (chip)	100 63M J				01
R454	**RD359100**	Carbon Resistor (chip)	1.0M 63M J				01
R455	**RD355100**	Carbon Resistor (chip)	100 63M J				01
R456	**RD355680**	Carbon Resistor (chip)	680 63M J				01
R510	**RD255470**	Carbon Resistor (chip)	470.0 0.1 J				01
R511	**RD355100**	Carbon Resistor (chip)	100 63M J				01
R560	**RD355100**	Carbon Resistor (chip)	100 63M J				01
-565	**RD355100**	Carbon Resistor (chip)	100 63M J				01
R620	**RD359100**	Carbon Resistor (chip)	1.0M 63M J				01
R621	**RD355100**	Carbon Resistor (chip)	100 63M J				01
R670	**RD355100**	Carbon Resistor (chip)	100 63M J				01
-677	**RD355100**	Carbon Resistor (chip)	100 63M J				01
R700	**RD357100**	Carbon Resistor (chip)	10K 63M J				01
R701	**RD356100**	Carbon Resistor (chip)	1.0K 63M J				01
R750	**RD357100**	Carbon Resistor (chip)	10K 63M J				01
R751	**RD356100**	Carbon Resistor (chip)	1.0K 63M J				01
R752	**RD355330**	Carbon Resistor (chip)	330 63M J				01
R753	**RD356100**	Carbon Resistor (chip)	1.0K 63M J				01

∗:New Parts RANK:Japan only

	REF NO.	PART NO.	DESCRIPTION			REMARKS	QTY	RANK
	R754	**RD355330**	Carbon Resistor (chip)	330 63M J				01
	-757	**RD355330**	Carbon Resistor (chip)	330 63M J				01
	R758	**RD356100**	Carbon Resistor (chip)	1.0K 63M J				01
	-760	**RD356100**	Carbon Resistor (chip)	1.0K 63M J				01
	R761	**RD355330**	Carbon Resistor (chip)	330 63M J				01
	R802	**RD355220**	Carbon Resistor (chip)	220 63M J				01
	R804	**RD355220**	Carbon Resistor (chip)	220 63M J				01
	R810	**RD357100**	Carbon Resistor (chip)	10K 63M J				01
*	RY001	**V2902800**	Relay	DC NAS-5W-K-TN				
*	SW1	**V3026900**	Jumper Switch	CHS-01 TA1				
	TR030	**VV556400**	Transistor	2SC2412K Q,R,S				01
	TR031	**VJ927200**	Transistor	2SA1162 O,Y				01
	X1	**VV335600**	Quartz Crystal Unit	33.8688M DSO751S				06
	XL100	**VV762900**	Quartz Crystal Unit	7M SMD-49				03
	ZD510	**VU172000**	Zener Diode	UDZS5.6BTE-17 5.6V				01
		- -	Circuit Board	FU60		J (VT15140)(XQ395A0)		
		- -	Circuit Board	FU60		U (VT15150)(XQ395A0)		
		- -	Circuit Board	FU60		E,B (VT15160)(XQ395A0)		
		- -	Circuit Board	FU60		N (VT15290)(XQ395A0)		
		VT139600	Voltage Selector	M1684-E		N		04
		VT308100	AC Inlet	2P CCT9302-0101M		J		02
		VT308200	AC Inlet	2P CCT9302-0201		U		02
		VT308100	AC Inlet	2P CCT9302-0101M		E,B,N		02
		VD041700	Jumper Wire	0.55				
		LB201530	Fuse Holder	PC-PH1		J	2	01
		LB201530	Fuse Holder	PC-PH1		U,E,B	2	01
		LB201530	Fuse Holder	PC-PH1		N	6	01
⚠	C1	**VT575200**	Capacitor-KC	0.01 400V J.U.C.S				01
⚠	C2	**FI383470**	Capacitor	4700P 400V U.C.S.V				01
⚠	C3	**FI383470**	Capacitor	4700P 400V U.C.S.V				01
	CN1	**LB932030**	Base Post Connector	VH 3P TE				01
	CN2	**LB932060**	Base Post Connector	VH 6P TE				01
⚠	F1	**KB003590**	Fuse	3.00A JU		J,U,N		01
⚠	F1	**KB003060**	Fuse	1.60A S		E,B		01
⚠	F2	**KB003060**	Fuse	1.60A S		N		01
⚠	F3	**KB003060**	Fuse	1.60A S		N		01
	J1	**VD041700**	Jumper Wire	0.55		J,U,E,B		
	L1	**VD041700**	Jumper Wire	0.55				
	L2	**VD041700**	Jumper Wire	0.55				
	L3	**VF790900**	Coil	SU10V-D20010 10uH				03
		VY663700	Circuit Board	HP (YMMA)		(XT162A0)(XQ795A0)		08
		VT478400	Circuit Board	HP (YCJ)		(XQ795A0)		10
	C1	**VE659000**	Semiconductive Cera. Cap.	0.1 25V Z				01
	-5	**VE659000**	Semiconductive Cera. Cap.	0.1 25V Z				01
	C6	**VD041700**	Jumper Wire	0.55				
	C7	**VD041700**	Jumper Wire	0.55				
	CN1	**VB858600**	Connector Base Post	PH- 7P SE				01
	CN2	**VB858100**	Connector Base Post	PH- 2P SE				01
	CN3	**LB919020**	Base Post Connector	XH 2P SE				01
	FL1	**VB971100**	Coil	FL5R200QN 20uH				01
	-L6	**VB971100**	Coil	FL5R200QN 20uH				01
	HP1	**LB101870**	Phone Jack	YKB21-5006		PHONES		03
	HP2	**LB101870**	Phone Jack	YKB21-5006		PHONES		03
	R1	**VK992200**	Carbon Resistor	68.0 1/2 J				01
	-4	**VK992200**	Carbon Resistor	68.0 1/2 J				01
	R5	**VD041700**	Jumper Wire	0.55				
		VY638900	Circuit Board	INV		(XT112A0)		13
	C1	**VP318400**	Electrolytic Cap. (chip)	0.068 250 ECQE26				01
	C2	**VS147400**	Ceramic Capacitor-SL	18P 3KV J				01
	CN1	**LB919020**	Base Post Connector	XH 2P SE				01
	CN2	**VT389600**	Base Post Connector	53259 4P SE				01
	L1	**VS587900**	Coil	LH L 08TB221K 220u				01
	L2	**VS602500**	Inverter Transformer	CLF16A				07
	R1	**HF756560**	Carbon Resistor	5.6K 1/4 J				01
	R2	**HF756560**	Carbon Resistor	5.6K 1/4 J				01
	TR1	**VS185700**	Transistor	2SC3669-O/Y(TPF2)		}		01
	TR1	**VS185600**	Transistor	2SD1863 TV2 82-390		}		01

*:New Parts

RANK:Japan only

REF NO.	PART NO.	DESCRIPTION			REMARKS	QTY	RANK
TR2	**VS185700**	Transistor	2SC3669-O/Y(TPF2)		}		01
TR2	**VS185600**	Transistor	2SD1863 TV2 82-390		}		01
*	**AAX07330**	Circuit Board	JACK		(XU370D0)		
*	**AAX07340**	Circuit Board	EQ		(XU370D0)		
	VT967700	Support, PCB	WLS-20-0				01
	VD041700	Jumper Wire	0.55				
	- -	Connector Assembly	EQ		(V209610)		
C1	**UR838100**	Electrolytic Cap.	100.00 16.0V				01
C2	**UR838100**	Electrolytic Cap.	100.00 16.0V				01
C3	**FG644100**	Ceramic Capacitor-F	0.01 50V Z				01
C100	**FG644100**	Ceramic Capacitor-F	0.01 50V Z				01
-102	**FG644100**	Ceramic Capacitor-F	0.01 50V Z				01
C103	**UR837100**	Electrolytic Cap.	10.00 16.0V				01
C104	**FG644100**	Ceramic Capacitor-F	0.01 50V Z				01
C105	**VC694800**	Semiconductive Cera. Cap.	0.1 25V Z				01
C106	**UR837470**	Electrolytic Cap.	47.00 16.0V				01
C107	**FG644100**	Ceramic Capacitor-F	0.01 50V Z				01
C200	**UN866470**	Electrolytic Cap.-BP	4.70 50.0V				01
C201	**UN866470**	Electrolytic Cap.-BP	4.70 50.0V				01
C202	**FG651470**	Ceramic Capacitor-SL	47P 50V J				01
C203	**FG651470**	Ceramic Capacitor-SL	47P 50V J				01
C204	**FG651390**	Ceramic Capacitor-SL	39P 50V J				01
C205	**FG651390**	Ceramic Capacitor-SL	39P 50V J				01
C206	**FG651680**	Ceramic Capacitor-SL	68P 50V J				01
C207	**FG651680**	Ceramic Capacitor-SL	68P 50V J				01
C208	**VR168300**	Monolithic Mylar Capacitor	ECQ-V1H104JL3				01
C209	**VR168300**	Monolithic Mylar Capacitor	ECQ-V1H104JL3				01
C210	**UN847470**	Electrolytic Cap.-BP	47.00 25.0V				01
-213	**UN847470**	Electrolytic Cap.-BP	47.00 25.0V				01
C214	**FG644100**	Ceramic Capacitor-F	0.01 50V Z				01
-219	**FG644100**	Ceramic Capacitor-F	0.01 50V Z				01
C301	**VR168900**	Monolithic Mylar Capacitor	ECQ-V1H274JL3				01
C302	**VR169500**	Monolithic Mylar Capacitor	ECQ-V1H824JL3				02
C303	**UA354680**	Monolithic Mylar Capacitor	0.068 50V J				01
C304	**VR168400**	Monolithic Mylar Capacitor	ECQ-V1H124JL3				01
C305	**UA353560**	Monolithic Mylar Capacitor	5600P 50V J				
C306	**UR168400**	Mylar Capacitor	ECQ-V1H124JL3				01
C307	**UA353150**	Mylar Capacitor	1500P 50V J				
C308	**UA954270**	Mylar Capacitor	0.027 50V J				
C309	**UA353680**	Mylar Capacitor	6800P 50V J				
C310	**UA352100**	Mylar Capacitor	100P 50V J				01
C311	**VR168900**	Monolithic Mylar Capacitor	ECQ-V1H274JL3				
C312	**VR169500**	Monolithic Mylar Capacitor	ECQ-V1H824JL3				
C313	**UA354680**	Monolithic Mylar Capacitor	0.068 50V J				
C314	**VR168400**	Monolithic Mylar Capacitor	ECQ-V1H124JL3				01
C315	**UA353560**	Monolithic Mylar Capacitor	5600P 50V J				
C316	**VR168400**	Mylar Capacitor	ECQ-V1H124JL3				
C317	**UA353150**	Mylar Capacitor	1500P 50V J				
C318	**UA354270**	Mylar Capacitor	0.027 50V J				
C319	**UA353680**	Mylar Capacitor	6800P 50V J				
C320	**UA352100**	Mylar Capacitor	100P 50V J				01
C321	**FG612560**	Ceramic Capacitor-B	560P 50V K				01
C322	**FG644100**	Ceramic Capacitor-F	0.01 50V Z				01
C323	**FG644100**	Ceramic Capacitor-F	0.01 50V Z				01
C324	**FG612560**	Ceramic Capacitor-B	560P 50V K				01
C325	**FG644100**	Ceramic Capacitor-F	0.01 50V Z				01
C326	**FG644100**	Ceramic Capacitor-F	0.01 50V Z				01
CA1	**VK994900**	Ceramic Capacitor Array	100P 50V M				01
CN1	**VV878800**	Connector Plug	1.25FJ 15P TE				02
CN2	**V0000200**	Connector Plug	1.25FJ 11P TE				02
CN3	**VB390400**	Connector Base Post	PH- 8P TE				01
CN4	**VB390000**	Connector Base Post	PH- 4P TE				01
CN6	**VB390500**	Connector Base Post	PH- 9P TE				03
CN7	**VB390300**	Connector Base Post	PH- 7P TE				01
D1	**VD631600**	Diode	1SS133,176,HSS104				01
D2	**VB481900**	Diode	11ES4				01
IC1	**IG142250**	IC	SN74HCU04N		INVERTER		01
IC2	**VD473200**	Photo Coupler	6N137				05
IC3	**XU463A00**	IC	SN75C1168N		LINE TRANSCEIVER		05

*:New Parts RANK:Japan only

REF NO.	PART NO.	DESCRIPTION			REMARKS	QTY	RANK
IC4	**XB247A00**	IC	UPC4570HA		OP AMP		02
IC5	**XM804A00**	IC	LA6517		OP AMP		04
IC6	**XB247A00**	IC	UPC4570HA		OP AMP		02
IC7	**XF751A00**	IC	M5227P		EQUALIZER		04
IC8	**XF751A00**	IC	M5227P		EQUALIZER		04
JK1	**VT202500**	DIN Connector	5P YKF51-50		MIDI IN/OUT/THRU		01
-3	**VT202500**	DIN Connector	5P YKF51-50				01
JK4	**VM761000**	DIN Connector	DIN 8P MD-S810		PEDAL		03
JK5	**VZ743800**	DIN Connector	DIN 6P MD-S610		TO HOST		02
JK6	**VS115400**	Phone Jack	LGR4609-7000 BL		AUX IN (R,L/L+R),		01
-9	**VS115400**	Phone Jack	LGR4609-7000 BL		AUX OUT (R,L/L+R)		01
L100	**VB835000**	Coil	FL5R200QNT 20uH				01
-105	**VB835000**	Coil	FL5R200QNT 20uH				01
L106	**GE300670**	Ferrite Bead	BL02RN2-R62T4				02
-112	**GE300670**	Ferrite Bead	BL02RN2-R62T4				02
L113	**VB835000**	Coil	FL5R200QNT 20uH				01
-116	**VB835000**	Coil	FL5R200QNT 20uH				01
L200	**VT733400**	Coil	SBT-0210T 10uH				02
L204	**VT733400**	Coil	SBT-0210T 10uH				02
L205	**GE300670**	Ferrite Bead	BL02RN2-R62T4				02
L206	**VT733400**	Coil	SBT-0210T 10uH				02
L207	**GE300670**	Ferrite Bead	BL02RN2-R62T4				02
R1	**HF756100**	Carbon Resistor	1.0K 1/4 J				01
R2	**HF757100**	Carbon Resistor	10.0K 1/4 J				01
R3	**HF756100**	Carbon Resistor	1.0K 1/4 J				01
R4	**HF756470**	Carbon Resistor	4.7K 1/4 J				01
R100	**HF756100**	Carbon Resistor	1.0K 1/4 J				01
R101	**HF755220**	Carbon Resistor	220.0 1/4 J				01
-103	**HF755220**	Carbon Resistor	220.0 1/4 J				01
R104	**HF757220**	Carbon Resistor	22.0K 1/4 J				01
R105	**HF756150**	Carbon Resistor	1.5K 1/4 J				01
R106	**HF757100**	Carbon Resistor	10.0K 1/4 J				01
R107	**HF757220**	Carbon Resistor	22.0K 1/4 J				01
R108	**HF755220**	Carbon Resistor	220.0 1/4 J				01
R109	**HF755220**	Carbon Resistor	220.0 1/4 J				01
R110	**HF757220**	Carbon Resistor	22.0K 1/4 J				01
R111	**HF756150**	Carbon Resistor	1.5K 1/4 J				01
R112	**HF757100**	Carbon Resistor	10.0K 1/4 J				01
-114	**HF757100**	Carbon Resistor	10.0K 1/4 J				01
R115	**HF755220**	Carbon Resistor	220.0 1/4 J				01
R116	**HF755220**	Carbon Resistor	220.0 1/4 J				01
R117	**HF757100**	Carbon Resistor	10.0K 1/4 J				01
-121	**HF757100**	Carbon Resistor	10.0K 1/4 J				01
R122	**HF456330**	Carbon Resistor	3.3K 1/4 J		}		01
R122	**HF756330**	Carbon Resistor	3.3K 1/4 J		}		01
R123	**HF757100**	Carbon Resistor	10.0K 1/4 J				01
R124	**HF757100**	Carbon Resistor	10.0K 1/4 J				01
R200	**HF756680**	Carbon Resistor	6.8K 1/4 J				11
R201	**HF757120**	Carbon Resistor	12.0K 1/4 J				01
R202	**HF756680**	Carbon Resistor	6.8K 1/4 J				01
R203	**HF757120**	Carbon Resistor	12.0K 1/4 J				01
R204	**HF757470**	Carbon Resistor	47.0K 1/4 J				01
R205	**HF757470**	Carbon Resistor	47.0K 1/4 J				01
R206	**HF757270**	Carbon Resistor	27.0K 1/4 J				01
R207	**HF757120**	Carbon Resistor	12.0K 1/4 J				01
R208	**HF757560**	Carbon Resistor	56.0K 1/4 J				01
R209	**HF754330**	Carbon Resistor	33.0 1/4 J				01
R210	**HF757270**	Carbon Resistor	27.0K 1/4 J				01
R211	**HF757120**	Carbon Resistor	12.0K 1/4 J				01
R212	**HF757560**	Carbon Resistor	56.0K 1/4 J				01
R213	**HF754330**	Carbon Resistor	33.0 1/4 J				01
R214	**HF757330**	Carbon Resistor	33.0K 1/4 J				01
-217	**HF757330**	Carbon Resistor	33.0K 1/4 J				01
R218	**HF755680**	Carbon Resistor	680.0 1/4 J				01
R219	**HF756470**	Carbon Resistor	4.7K 1/4 J				01
R220	**HF756470**	Carbon Resistor	4.7K 1/4 J				01
R221	**HF755680**	Carbon Resistor	680.0 1/4 J				01
R222	**VD041700**	Jumper Wire	0.55				
R223	**VD041700**	Jumper Wire	0.55				
R225	**HF757120**	Carbon Resistor	12.0K 1/4 J				01

∗:New Parts RANK:Japan only

REF NO.	PART NO.	DESCRIPTION			REMARKS	QTY	RANK
R226	**HF757120**	Carbon Resistor	12.0K 1/4 J				01
R227	**HF756470**	Carbon Resistor	4.7K 1/4 J				01
R228	**HF756150**	Carbon Resistor	1.5K 1/4 J				01
R229	**HF756470**	Carbon Resistor	4.7K 1/4 J				01
R230	**HF756150**	Carbon Resistor	1.5K 1/4 J				01
R301	**HF757180**	Carbon Resistor	18.0K 1/4 J				01
R302	**HF756220**	Carbon Resistor	2.2K 1/4 J				01
R303	**HF757120**	Carbon Resistor	12.0K 1/4 J				01
R304	**HF756680**	Carbon Resistor	6.8K 1/4 J				01
R305	**HF756470**	Carbon Resistor	4.7K 1/4 J				01
R306	**HF757150**	Carbon Resistor	15.0K 1/4 J				01
R307	**HF755560**	Carbon Resistor	560.0 1/4 J				01
R308	**HF757180**	Carbon Resistor	18.0K 1/4 J				01
R309	**HF757220**	Carbon Resistor	22.0K 1/4 J				01
R310	**HF756100**	Carbon Resistor	1.0K 1/4 J				01
R311	**HF757180**	Carbon Resistor	18.0K 1/4 J				01
R312	**HF756220**	Carbon Resistor	2.2K 1/4 J				01
R313	**HF757120**	Carbon Resistor	12.0K 1/4 J				01
R314	**HF756680**	Carbon Resistor	6.8K 1/4 J				01
R315	**HF756470**	Carbon Resistor	4.7K 1/4 J				01
R316	**HF757150**	Carbon Resistor	15.0K 1/4 J				01
R317	**HF755560**	Carbon Resistor	560.0 1/4 J				01
R318	**HF757180**	Carbon Resistor	18.0K 1/4 J				01
R319	**HF757220**	Carbon Resistor	22.0K 1/4 J				01
R320	**HF756100**	Carbon Resistor	1.0K 1/4 J				01
R321	**HF756470**	Carbon Resistor	4.7K 1/4 J				01
R322	**HF756470**	Carbon Resistor	4.7K 1/4 J				01
R323	**HF756330**	Carbon Resistor	3.3K 1/4 J				01
R324	**HF756330**	Carbon Resistor	3.3K 1/4 J				01
RY1	**KC001900**	Relay	DC RY12W 12V				07
RY2	**KC001900**	Relay	DC RY12W 12V				07
SW1	**VQ665200**	Slide Switch	SSSF144-S06N-0		HOST SELECT		03
TR1	**IC174070**	Transistor	2SC1740S R,S				01
-5	**IC174070**	Transistor	2SC1740S R,S				01
	- -	Circuit Board	MA60		J,U (VT14390)(XQ778E0)		
	- -	Circuit Board	MA60		E,B,N (VT14400)(XQ778E0)		
	VT443500	Support, PCB	T=8				03
	VT740000	Support, PCB	3T-9 T=9			3	03
	VJ834500	Insulation Sheet					03
	VD041700	Jumper Wire	0.55			30	
C1	**VA302600**	Ceramic Capacitor-E	0.01 500V P				01
C3	**VU642700**	Electrolytic Cap.	4700 16.0V				03
C4	**VU642700**	Electrolytic Cap.	4700 16.0V				03
C5	**VL232400**	Electrolytic Cap.	3300 35.0V				04
-8	**VL232400**	Electrolytic Cap.	3300 35.0V				04
C9	**UR866100**	Electrolytic Cap.	1.00 50.0V				01
-11	**UR866100**	Electrolytic Cap.	1.00 50.0V				01
C12	**FG613100**	Ceramic Capacitor-B	1000P 50V K				01
C13	**UR838100**	Electrolytic Cap.	100.00 16.0V				01
C16	**UR866100**	Electrolytic Cap.	1.00 50.0V				01
C17	**VC694800**	Semiconductive Cera. Cap.	0.1 25V Z				01
C18	**UR866100**	Electrolytic Cap.	1.00 50.0V				01
C19	**UR866100**	Electrolytic Cap.	1.00 50.0V				01
C20	**UR868100**	Electrolytic Cap.	100.00 50.0V				01
C21	**UR868100**	Electrolytic Cap.	100.00 50.0V				01
C22	**FG613100**	Ceramic Capacitor-B	1000P 50V K				01
C23	**UR866100**	Electrolytic Cap.	1.00 50.0V				01
C24	**UR838100**	Electrolytic Cap.	100.00 16.0V				01
C25	**VC694800**	Semiconductive Cera. Cap.	0.1 25V Z				01
C26	**VC694800**	Semiconductive Cera. Cap.	0.1 25V Z				01
C27	**FG613100**	Ceramic Capacitor-B	1000P 50V K				01
C28	**UR866100**	Electrolytic Cap.	1.00 50.0V				01
C29	**UR838100**	Electrolytic Cap.	100.00 16.0V				01
C30	**VC694800**	Semiconductive Cera. Cap.	0.1 25V Z				01
C31	**VC694800**	Semiconductive Cera. Cap.	0.1 25V Z				01
C32	**UR838100**	Electrolytic Cap.	100.00 16.0V				01
C33	**UR866330**	Electrolytic Cap.	3.3 50.0V				01
CN1	**LB932050**	Base Post Connector	VH 5P TE				01
CN3	**LB918030**	Base Post Connector	XH 3P TE				01

∗:New Parts RANK:Japan only

	REF NO.	PART NO.	DESCRIPTION			REMARKS	QTY	RANK
	CN4	**VB390300**	Connector Base Post	PH 7P TE				01
	CN5	**LB932040**	Base Post Connector	VH 4P TE				01
	CN6	**VB390500**	Connector Base Post	PH 9P TE				03
	D1	**VB481900**	Diode	11ES4				01
	-5	**VB481900**	Diode	11ES4				01
	DB1	**VK421800**	Diode Stack	D5SBA20 6.0A 200V				03
	DB2	**VQ111500**	Diode Stack	D3SBA20-4103 4.0A				03
⚠	F1	**KB003630**	Fuse	5.00A JU		J,U		01
⚠	F1	**KB003240**	Fuse	5.00A S		E,B,N		01
⚠	F2	**KB003630**	Fuse	5.00A JU		J,U		01
⚠	F2	**KB003240**	Fuse	5.00A S		E,B,N		01
⚠	F3	**KB003630**	Fuse	5.00A JU		J,U		01
⚠	F3	**KB003240**	Fuse	5.00A S		E,B,N		01
	FUHOL	**VP206500**	Fuse Holder	EYF-52BC			6	01
	IC1	**XQ437A00**	IC	SI-3051N		REGULATOR +5V		03
	IC2	**XQ667A00**	IC	M5237L		REGULATOR +5V		02
	IC3	**XJ602A00**	IC	NJM78M12FA		REGULATOR +12V		02
	IC4	**XD343A00**	IC	NJM79M12FA		REGULATOR -12V		03
	IC5	**XL972A00**	IC	STK401-040		POWER AMPLIFIER		08
	J3	**VD041700**	Jumper Wire	0.55				
	J4	**VD041700**	Jumper Wire	0.55				
	R3	**HF756100**	Carbon Resistor	1.0K 1/4 J				01
	R4	**HF755220**	Carbon Resistor	220.0 1/4 J				01
	R5	**HF754560**	Carbon Resistor	56.0 1/4 J				01
	R6	**HF757100**	Carbon Resistor	10.0K 1/4 J				01
	R7	**HF756330**	Carbon Resistor	3.3K 1/4 J				01
	R8	**HW095100**	Fuse Resistor	100.0 1/4 J				01
	R9	**HW095100**	Fuse Resistor	100.0 1/4 J				01
	R10	**HF755560**	Carbon Resistor	560.0 1/4 J				01
	R11	**HF757100**	Carbon Resistor	10.0K 1/4 J				01
	R12	**HF755560**	Carbon Resistor	560.0 1/4 J				01
	R13	**HF757100**	Carbon Resistor	10.0K 1/4 J				01
	R14	**VC742500**	Metal Oxide Film Resistor	10.0 1W J				01
	R15	**HF757100**	Carbon Resistor	10.0K 1/4 J				01
	R16	**HF755560**	Carbon Resistor	560.0 1/4 J				01
	R17	**HF757100**	Carbon Resistor	10.0K 1/4 J				01
	R18	**HF755560**	Carbon Resistor	560.0 1/4 J				01
	R19	**HF757100**	Carbon Resistor	10.0K 1/4 J				01
	R20	**VC742500**	Metal Oxide Film Resistor	10.0 1W J				01
	R21	**HF757100**	Carbon Resistor	10.0K 1/4 J				01
	R22	**HF756330**	Carbon Resistor	3.3K 1/4 J				01
	R23	**HF756330**	Carbon Resistor	3.3K 1/4 J				01
	RY1	**VK881200**	Relay	DC G5Z-2A-YA 12V				04
	TR1	**VJ828100**	Transistor	2SA1451 O.Y				04
	TR2	**IC1815M0**	Transistor	2SC1815 Y,GR				01
	-4	**IC1815M0**	Transistor	2SC1815 Y,GR				01
		VY636000	Circuit Board	MIC		J (XT119C0)		14
		LB101870	Phone Jack	YKB21-5006		MIC.		03
		VY643900	Rotary Variable Resistor	B10.0K RK097232000		VOLUME (MIC/ECHO)		06
		VD041700	Jumper Wire	0.55			8	
	C01	**UB013100**	Monolithic Ceramic Cap.	B 1000P 50V K				01
	C02	**UB044100**	Monolithic Ceramic Cap.	F 0.01 50V Z				01
	C03	**UB044100**	Monolithic Ceramic Cap.	F 0.01 50V Z				01
	C04	**UB245100**	Monolithic Ceramic Cap.	F 0.1 25V Z				01
	C05	**UR865470**	Electrolytic Cap.	0.47 50.0V				01
	C06	**UR865470**	Electrolytic Cap.	0.47 50.0V				01
	C07	**UB245100**	Monolithic Ceramic Cap.	F 0.1 25V Z				01
	C08	**UB245100**	Monolithic Ceramic Cap.	F 0.1 25V Z				01
	C09	**UR865470**	Electrolytic Cap.	0.47 50.0V				01
	C10	**UB012820**	Monolithic Ceramic Cap.	B 820P 50V K				01
	C11	**UB044150**	Monolithic Ceramic Cap.	F 0.015 50V Z				01
	C12	**UB013560**	Monolithic Ceramic Cap.	B 5600P 50V K				01
	C13	**UB012680**	Monolithic Ceramic Cap.	B 680P 50V K				01
	C14	**UR867220**	Electrolytic Cap.	22.00 50.0V				01
	C15	**UB245100**	Monolithic Ceramic Cap.	F 0.1 25V Z				01
	C16	**UR865470**	Electrolytic Cap.	0.47 50.0V				01
	C17	**UB013560**	Monolithic Ceramic Cap.	B 5600P 50V K				01
	C18	**UB044150**	Monolithic Ceramic Cap.	F 0.015 50V Z				01
	C19	**UB012820**	Monolithic Ceramic Cap.	B 820P 50V K				01

∗:New Parts RANK:Japan only

REF NO.	PART NO.	DESCRIPTION			REMARKS	QTY	RANK
C20	**UB013220**	Monolithic Ceramic Cap.	B 2200P 50V K				01
C21	**UB245100**	Monolithic Ceramic Cap.	F 0.1 25V Z				01
C22	**UR828100**	Electrolytic Cap.	100.00 10.0V				01
C23	**UR865470**	Electrolytic Cap.	0.47 50.0V				01
C24	**UB013100**	Monolithic Ceramic Cap.	B 1000P 50V K				01
C25	**UR865470**	Electrolytic Cap.	0.47 50.0V				01
C26	**UB245100**	Monolithic Ceramic Cap.	F 0.1 25V Z				01
-28	**UB245100**	Monolithic Ceramic Cap.	F 0.1 25V Z				01
C29	**UB013100**	Monolithic Ceramic Cap.	B 1000P 50V K				01
CL1	**VJ958100**	Ceramic Resonator	CSB455E				03
CN01	**VB858300**	Connector Base Post	PH- 4P SE				01
D01	**VU171900**	Zener Diode	UDZS5.1BTE-17 5.1V				01
FL1	**VR243700**	Chip Inductance	56U LEM2520 T 560J				01
FL2	**VD041700**	Jumper Wire	0.55				
IC01	**XT129A00**	IC	BA7725FS-E2		COMPANDER		05
IC02	**XT130A00**	IC	BU9252F-E2		DIGITAL DELAY		05
IC03	**XJ597A00**	IC	NJM78L09A		REGULATOR +9V		01
JP	**RD250000**	Carbon Resistor (chip)	0.0 0.0 J				01
R01	**RD256330**	Carbon Resistor (chip)	3.3K 0.1 J				01
R03	**RD256220**	Carbon Resistor (chip)	2.2K 0.1 J				01
R04	**RD257100**	Carbon Resistor (chip)	10.0K 0.1 J				01
R05	**RD256470**	Carbon Resistor (chip)	4.7K 0.1 J				01
R06	**RD256390**	Carbon Resistor (chip)	3.9K 0.1 J				01
R07	**RD257560**	Carbon Resistor (chip)	56.0K 0.1 J				01
R08	**RD257100**	Carbon Resistor (chip)	10.0K 0.1 J				01
-11	**RD257100**	Carbon Resistor (chip)	10.0K 0.1 J				01
R12	**RD257560**	Carbon Resistor (chip)	56.0K 0.1 J				01
R13	**RD257330**	Carbon Resistor (chip)	33.0K 0.1 J				01
R14	**RD257100**	Carbon Resistor (chip)	10.0K 0.1 J				01
-16	**RD257100**	Carbon Resistor (chip)	10.0K 0.1 J				01
R17	**RD255330**	Carbon Resistor (chip)	330.0 0.1 J				01
*	**V3149500**	Circuit Board	NW1		(XT123B0)		
	VD041700	Jumper Wire	0.55			4	
C0003	**VS677200**	Electrolytic Cap.-BP	1.50UF 63.0V				01
C0004	**VS677200**	Electrolytic Cap.-BP	1.50UF 63.0V				01
CN001	**LB932040**	Base Post Connector	VH 4P TE				01
CN002	**LB932080**	Base Post Connector	VH 8P TE				01
CN003	**LB918050**	Base Post Connector	XH 5P TE				01
	V2337300	Circuit Board	PEDAL		(CR780B0)		07
	VB390200	Connector Base Post	PH- 6P TE				01
	VD041700	Jumper Wire	0.55				
	- -	GND Wire	L=30		(VZ01760)		
	VN637600	Circuit Board	PL (YCJ)		(XL151B0)		05
	VU659100	Circuit Board	PL (YMMA)		(XR898A0)		01
CN1	**VB858100**	Connector Base Post	PH- 2P SE				01
LED1	**VD180000**	LED	SLZ-190B-03 RE		POWER indicator		01
	VV880100	Circuit Board	PNGC		(XS977A0)		11
CN001	**VV878700**	Connector Receptacle	1.25FJ 15P TE				01
D0001	**VB941200**	Diode	1SS133,1SS176				01
-0009	**VB941200**	Diode	1SS133,1SS176				01
KLD36	**VY746800**	LED	SEL4725Y TP3 YE		G#2		01
KLD37	**VY746700**	LED	SEL4225R TP3 RE		A2		01
KLD38	**VY746800**	LED	SEL4725Y TP3 YE		A#2		01
KLD39	**VY746700**	LED	SEL4225R TP3 RE		B2		01
KLD40	**VY746700**	LED	SEL4225R TP3 RE		C3		01
KLD41	**VY746800**	LED	SEL4725Y TP3 YE		C#3		01
KLD42	**VY746700**	LED	SEL4225R TP3 RE		D3		01
KLD43	**VY746800**	LED	SEL4725Y TP3 YE		D#3		01
KLD44	**VY746700**	LED	SEL4225R TP3 RE		E3		01
KLD45	**VY746700**	LED	SEL4225R TP3 RE		F3		01
KLD46	**VY746800**	LED	SEL4725Y TP3 YE		F#3		01
KLD47	**VY746700**	LED	SEL4225R TP3 RE		G3		01
KLD48	**VY746800**	LED	SEL4725Y TP3 YE		G#3		01
KLD49	**VY746700**	LED	SEL4225R TP3 RE		A3		01
KLD50	**VY746800**	LED	SEL4725Y TP3 YE		A#3		01
KLD51	**VY746700**	LED	SEL4225R TP3 RE		B3		01

*:New Parts

RANK:Japan only

REF NO.	PART NO.	DESCRIPTION			REMARKS	QTY	RANK
KLD52	**VY746700**	LED	SEL4225R TP3 RE		C4		01
KLD53	**VY746800**	LED	SEL4725Y TP3 YE		C#4		01
LED01	**VD180000**	LED	SLZ-190B-03 RE		DIRECT ACCESS		01
SW001	**VQ371700**	Tact Switch	SKHVBL042A H=7		PAGE <,PAGE >,EXIT,		01
-009	**VQ371700**	Tact Switch	SKHVBL042A H=7		DIRECT ACCESS		01
*	**V3149600**	Circuit Board	PNL		(XV482A0)		
C0001	**UM397470**	Electrolytic Capacitor-KS	47.00 16.0V				01
-0005	**UM397470**	Electrolytic Capacitor-KS	47.00 16.0V				01
C0006	**FG644100**	Ceramic Capacitor-F	0.01 50V Z				01
C0007	**FG644100**	Ceramic Capacitor-F	0.01 50V Z				01
C0008	**UM416100**	Electrolytic Capacitor-KS	1.00 50.0V				01
CL001	**VE222400**	Ceramic Resonator	8 MHz EFO-FC8004A4				03
CN001	**VH904200**	Connector Base Post	PH-14P SE				01
CN002	**VV878800**	Connector Plug	1.25FJ 15P TE				02
CN002	**VV878800**	Connector Plug	1.25FJ 15P TE				02
CN003	**VK015600**	Connector Base Post	PH-16P SE				01
CN004	**VB858900**	Connector Base Post	PH-10P SE				01
CN005	**VC166500**	Connector Base Post	PH-12P SE				01
CN006	**VB858200**	Connector Base Post	PH- 3P SE				01
D0001	**VB941200**	Diode	1SS133,1SS176				01
-0014	**VB941200**	Diode	1SS133,1SS176				01
D0016	**VB941200**	Diode	1SS133,1SS176				01
-0037	**VB941200**	Diode	1SS133,1SS176				01
IC001	**XS711200**	IC	MN101C027YB		CPU		06
IC002	**VH885000**	Transistor Array	TD62785P SOURCE				04
IC003	**VJ041400**	Transistor Array	TD62381P				04
IC004	**VJ041400**	Transistor Array	TD62381P				04
KLD18	**VY746700**	LED	SEL4225R TP3 RE		D1		01
KLD19	**VY746800**	LED	SEL4725Y TP3 YE		D#1		01
KLD20	**VY746700**	LED	SEL4225R TP3 RE		E1		01
KLD21	**VY746700**	LED	SEL4225R TP3 RE		F1		01
KLD22	**VY746800**	LED	SEL4725Y TP3 YE		F#1		01
KLD23	**VY746700**	LED	SEL4225R TP3 RE		G1		01
KLD24	**VY746800**	LED	SEL4725Y TP3 YE		G#1		01
KLD25	**VY746700**	LED	SEL4225R TP3 RE		A1		01
KLD26	**VY746800**	LED	SEL4725Y TP3 YE		A#1		01
KLD27	**VY746700**	LED	SEL4225R TP3 RE		B1		01
KLD28	**VY746700**	LED	SEL4225R TP3 RE		C2		01
KLD29	**VY746800**	LED	SEL4725Y TP3 YE		C#2		01
KLD30	**VY746700**	LED	SEL4225R TP3 RE		D2		01
KLD31	**VY746800**	LED	SEL4725Y TP3 YE		D#2		01
KLD32	**VY746700**	LED	SEL4225R TP3 RE		E2		01
KLD33	**VY746700**	LED	SEL4225R TP3 RE		F2		01
KLD34	**VY746800**	LED	SEL4725Y TP3 YE		F#2		01
KLD35	**VY746700**	LED	SEL4225R TP3 RE		G2		01
LED01	**VD180000**	LED	SLZ-190B-03 RE		DEMO,8 BEAT,16 BEAT,		01
-14	**VD180000**	LED	SLZ-190B-03 RE		BALLAD,DANCE,ROCK/R&B, PIANIST,HELP,SWING/JAZZ, LATIN,COUNTRY,BALL-ROOM, TRAD/WALTZ,DISK/COUSTOM		01
LED16	**VD180000**	LED	SLZ-190B-03 RE		MUSIC DATABASE,		01
-26	**VD180000**	LED	SLZ-190B-03 RE		ACMP ASSIST,HARMONY AUTO ACCOMPANIMENT(ACMP ON, ..., ENDING),BEAT(1)		01
LED27	**VG778600**	LED	SLZ290B-03-T2 GR		BEAT(2-4)		01
-29	**VG778600**	LED	SLZ290B-03-T2 GR				01
LED30	**VD180000**	LED	SLZ-190B-03 RE		METRONOME,SYNCHRD,START/		01
-33	**VD180000**	LED	SLZ-190B-03 RE		STOP,FADE IN/OUT		01
R0001	**HF454470**	Carbon Resistor	47.0 1/4 J				01
R0002	**HF455100**	Carbon Resistor	100.0 1/4 J				01
-0015	**HF455100**	Carbon Resistor	100.0 1/4 J				01
R0016	**HF458470**	Carbon Resistor	470.0K 1/4 J				01
R0017	**HF456100**	Carbon Resistor	1.0K 1/4 J				01
R0020	**HF454470**	Carbon Resistor	47.0 1/4 J				01
-0026	**HF454470**	Carbon Resistor	47.0 1/4 J				01
R0027	**- -**	Jumper Wire	0.55		(VA07890)		
R0028	**HF457220**	Carbon Resistor	22.0K 1/4 J				01
R0029	**HF455100**	Carbon Resistor	100.0 1/4 J				01
RA001	**VF771900**	Resistor Array	RGLE8X103J				01

*:New Parts RANK:Japan only

	REF NO.	PART NO.	DESCRIPTION			REMARKS	QTY	RANK
	RA002	**VF771900**	Resistor Array	RGLE8X103J				01
	SW001	**VQ371700**	Tact Switch	SKHVBL042A H=7		DEMO,8 BEAT,16 BEAT,		01
	-014	**VQ371700**	Tact Switch	SKHVBL042A H=7		BALLAD,DANCE,ROCK/R&B, PIANIST,HELP,SWING/JAZZ, LATIN,COUNTRY,BALL-ROOM,		01
	SW016	**VQ371700**	Tact Switch	SKHVBL042A H=7		TRAD/WALTZ,DISK/COUSTOM MUSIC DATABASE,		01
	-037	**VQ371700**	Tact Switch	SKHVBL042A H=7		ACMP ASSIST,HARMONY,AUTO ACCOMPANIMENT(ACMP ON, .. ., ENDING),METRONOME,		01
						TEMPO(-,+),FADE IN/OUT, SYNCHRD,START/STOP, LCD select,TAP		
	TR001	**VT817300**	Digital Transistor	DTB113ZS TP				01
	TR002	**VT817300**	Digital Transistor	DTB113ZS TP				01
	VR001	**VS368200**	Rotary Variable Resistor	B10.0K RK09K1130BN		CONTRAST		01
*		**V3575800**	Circuit Board	PNGL		(XV483A0)		
*		**V3575700**	Circuit Board	PNGR		(XV483A0)		
*		**V3575600**	Circuit Board	PNR		(XV483A0)		
*		**V3575900**	Circuit Board	MV		(XV483A0)		
		- -	Jumper Wire	0.55		(VD04170)		
		- -	Connector Assembly	3P-50 DS-DS		(VT19590)		
		- -	Connector Assembly	L=350mm (GND)		(VT45140)		
	CN001	**VK015600**	Connector Base Post	PH-16P SE				01
	CN002	**VB858900**	Connector Base Post	PH-10P SE				01
	CN003	**VC166500**	Connector Base Post	PH-12P SE				01
	CN101	**VC166500**	Connector Base Post	PH-12P SE				01
	CN201	**VC166500**	Connector Base Post	PH-12P SE				01
	CN301	**VB858700**	Connector Base Post	PH- 8P SE				01
	CN302	**VB858200**	Connector Base Post	PH- 3P SE				01
	D0001	**VB941200**	Diode	1SS133,1SS176				01
	-0009	**VB941200**	Diode	1SS133,1SS176				01
	D0011	**VB941200**	Diode	1SS133,1SS176				01
	-0044	**VB941200**	Diode	1SS133,1SS176				01
	ENC	**VU481300**	Encoder	REB161 PVB 15F		DATA dial		03
	KLD01	**VY746700**	LED	SEL4225R TP3 RE		A-1		01
	KLD02	**VY746800**	LED	SEL4725Y TP3 YE		A#-1		01
	KLD03	**VY746700**	LED	SEL4225R TP3 RE		B-1		01
	KLD04	**VY746700**	LED	SEL4225R TP3 RE		C0		01
	KLD05	**VY746800**	LED	SEL4725Y TP3 YE		C#0		01
	KLD06	**VY746700**	LED	SEL4225R TP3 RE		D0		01
	KLD07	**VY746800**	LED	SEL4725Y TP3 YE		D#0		01
	KLD08	**VY746700**	LED	SEL4225R TP3 RE		E0		01
	KLD09	**VY746700**	LED	SEL4225R TP3 RE		F0		01
	KLD10	**VY746800**	LED	SEL4725Y TP3 YE		F#0		01
	KLD11	**VY746700**	LED	SEL4225R TP3 RE		G0		01
	KLD12	**VY746800**	LED	SEL4725Y TP3 YE		G#0		01
	KLD13	**VY746700**	LED	SEL4225R TP3 RE		A0		01
	KLD14	**VY746800**	LED	SEL4725Y TP3 YE		A#0		01
	KLD15	**VY746700**	LED	SEL4225R TP3 RE		B0		01
	KLD16	**VY746700**	LED	SEL4225R TP3 RE		C1		01
	KLD17	**VY746800**	LED	SEL4725Y TP3 YE		C#1		01
	KLD54	**VY746700**	LED	SEL4225R TP3 RE		D4		01
	KLD55	**VY746800**	LED	SEL4725Y TP3 YE		D#4		01
	KLD56	**VY746700**	LED	SEL4225R TP3 RE		E4		01
	KLD57	**VY746700**	LED	SEL4225R TP3 RE		F4		01
	KLD58	**VY746800**	LED	SEL4725Y TP3 YE		F#4		01
	KLD59	**VY746700**	LED	SEL4225R TP3 RE		G4		01
	KLD60	**VY746800**	LED	SEL4725Y TP3 YE		G#4		01
	KLD61	**VY746700**	LED	SEL4225R TP3 RE		A4		01
	KLD62	**VY746800**	LED	SEL4725Y TP3 YE		A#4		01
	KLD63	**VY746700**	LED	SEL4225R TP3 RE		B4		01
	KLD64	**VY746700**	LED	SEL4225R TP3 RE		C5		01
	KLD65	**VY746800**	LED	SEL4725Y TP3 YE		C#5		01
	KLD66	**VY746700**	LED	SEL4225R TP3 RE		D5		01
	KLD67	**VY746800**	LED	SEL4725Y TP3 YE		D#5		01
	KLD68	**VY746700**	LED	SEL4225R TP3 RE		E5		01
	KLD69	**VY746700**	LED	SEL4225R TP3 RE		F5		01
	KLD70	**VY746800**	LED	SEL4725Y TP3 YE		F#5		01

*:New Parts

RANK:Japan only

	REF NO.	PART NO.	DESCRIPTION			REMARKS	QTY	RANK
	KLD71	**VY746700**	LED	SEL4225R TP3 RE		G5		01
	KLD72	**VY746800**	LED	SEL4725Y TP3 YE		G#5		01
	KLD73	**VY746700**	LED	SEL4225R TP3 RE		A5		01
	KLD74	**VY746800**	LED	SEL4725Y TP3 YE		A#5		01
	KLD75	**VY746700**	LED	SEL4225R TP3 RE		B5		01
	KLD76	**VY746700**	LED	SEL4225R TP3 RE		C6		01
	KLD77	**VY746800**	LED	SEL4725Y TP3 YE		C#6		01
	KLD78	**VY746700**	LED	SEL4225R TP3 RE		D6		01
	KLD79	**VY746800**	LED	SEL4725Y TP3 YE		D#6		01
	KLD80	**VY746700**	LED	SEL4225R TP3 RE		E6		01
	KLD81	**VY746700**	LED	SEL4225R TP3 RE		F6		01
	KLD82	**VY746800**	LED	SEL4725Y TP3 YE		F#6		01
	KLD83	**VY746700**	LED	SEL4225R TP3 RE		G6		01
	KLD84	**VY746800**	LED	SEL4725Y TP3 YE		G#6		01
	KLD85	**VY746700**	LED	SEL4225R TP3 RE		A6		01
	KLD86	**VY746800**	LED	SEL4725Y TP3 YE		A#6		01
	KLD87	**VY746700**	LED	SEL4225R TP3 RE		B6		01
	KLD88	**VY746700**	LED	SEL4225R TP3 RE		C7		01
	LED01	**VD180000**	LED	SLZ-190B-03 RE		SONG		01
	LED02	**VD180000**	LED	SLZ-190B-03 RE		MIXER		01
	LED04	**VD180000**	LED	SLZ-190B-03 RE		FUNCTION,GUIDE CONTROL		01
	-30	**VD180000**	LED	SLZ-190B-03 RE		(EASY PLAY, .., SOUND REPEAT),SONG CONTROL (PAUSE, .., REC),VOICE (PIANO, .., EFFECT),DISK IN USE,ONE TOUCH SETTING, REGISTRATION		01
	SW001	**VQ371700**	Tact Switch	SKHVBL042A H=7		LCD select,SONG,MIXER		01
	-009	**VQ371700**	Tact Switch	SKHVBL042A H=7				01
	SW011	**VQ371700**	Tact Switch	SKHVBL042A H=7		FUNCTION,GUIDE CONTROL		01
	-044	**VQ371700**	Tact Switch	SKHVBL042A H=7		(EASY PLAY, .., SOUND REPEAT),SONG CONTROL (PAUSE, .., REC),VOICE (PIANO, .., EFFECT), REGISTRATION(1-4),BANK(+/-),ONE TOUCH SETTING, RAGISTRATION		01
*	VR001	**V4007500**	Slide Variable Resistor	1B10K RS30112A9A02		MASTER VOLUME		
	VR002	**VK368700**	Slide Variable Resistor	B 10.0K RS30111A9		ACMP/SONG VOLUME		03
⚠		**VT015700**	AC Cord Set	2P 2.5m 7A		J		05
⚠		**V2916900**	AC Cord Set	2P 2.5m 7A		J		05
⚠		**V3126200**	AC Cord Set	2P 2.5m 7A		J		
⚠		**VT015800**	AC Cord Set	2P 2.44m 7A		U		06
		- -	AC Cord Set	2P 2.44m 7A		U (V291700)		
		- -	AC Cord Set	2P 2.5 7A		U (V312640)		
⚠		**VT015900**	AC Cord Set	2P 2.5m 2.5A		E,N		05
⚠		**V2917100**	AC Cord Set	2P 2.5m 2.5A		E,N		05
⚠		**V3126300**	AC Cord Set	2P 2.5m 2.5A		E,N		
⚠		**VT016000**	AC Cord Set	2P 2.5m		B		08
		- -	AC Cord Set	2P 2.5m		B (V312650)		
		VK726100	Connector	CCT5902		N		03
⚠		**XQ429B00**	Power Transformer	GA-60J		J		12
⚠*		**VU326500**	Power Transformer Assembly			U		
⚠		**XQ430C00**	Power Transformer	29WP243		U		11
⚠		**XQ431B00**	Power Transformer	GA-60 IEC65		E,B		12
⚠*		**XQ432C00**	Power Transformer	IEC65 GA-60		N		
		VT144300	Circuit Board Assembly	MA60		J,U		
		VT144400	Circuit Board Assembly	MA60		E,B,N		
		VT152000	Circuit Board Assembly	MA60		J		10
		VT152100	Circuit Board Assembly	FU60		U		10
		VT152200	Circuit Board Assembly	FU60		E,B		10
		VT153300	Circuit Board Assembly	FU60		N		12
*		**XV746A00**	Speaker	16.0cm 6 ohm 40W			2	
		XL455A00	Speaker	5.0cm 16 ohm 60W		} Monitor	2	07
		XQ524B00	Speaker	5.0cm 16 ohm 60W		}	2	06

*:New Parts

RANK:Japan only

REF NO.	PART NO.	DESCRIPTION			REMARKS	QTY	RANK
	VC843500	Push Switch	SDDLB1216A J.U.C.S		POWER swich		03
	V2043400	Floppy Disk Drive	D359M3				16
	- -	LCD	EDMMPU3BCF		(V333130)		

*:New Parts

RANK:Japan only

■CVP-105 OVERALL CIRCUIT DIAGRAM 1/2 (DM)

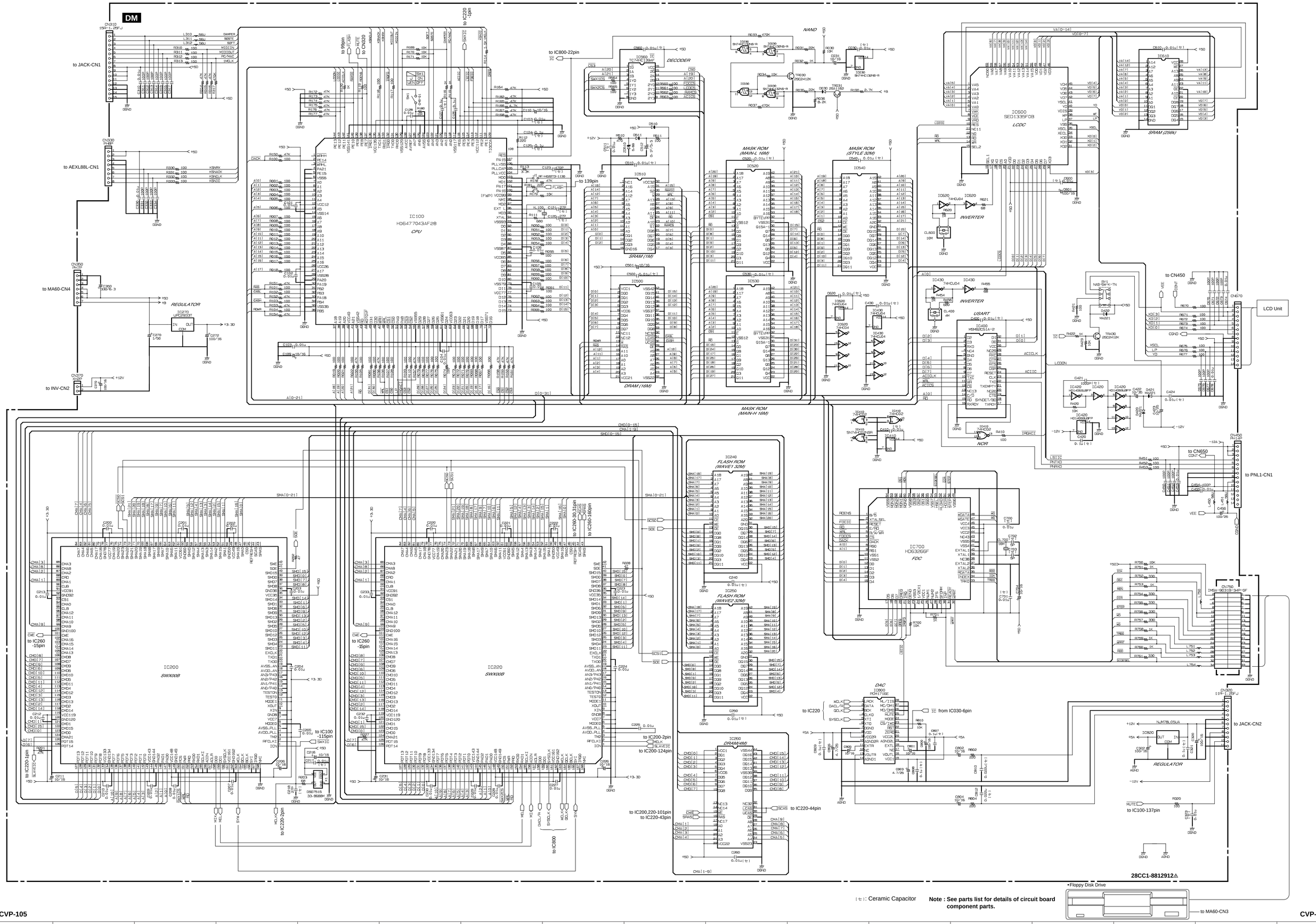

| ⊢ | : Ceramic Capacitor

Note : See parts list for details of circuit board component parts.

■CVP-105 OVERALL CIRCUIT DIAGRAM 2/2 (PNGC,PNGR,PNGL,PNR,PNL,INV,JACK,EQ,MV,HP,PL,NW1,MA60,FU60,AEXL88H,AEXL88L,PEDAL,ENC)

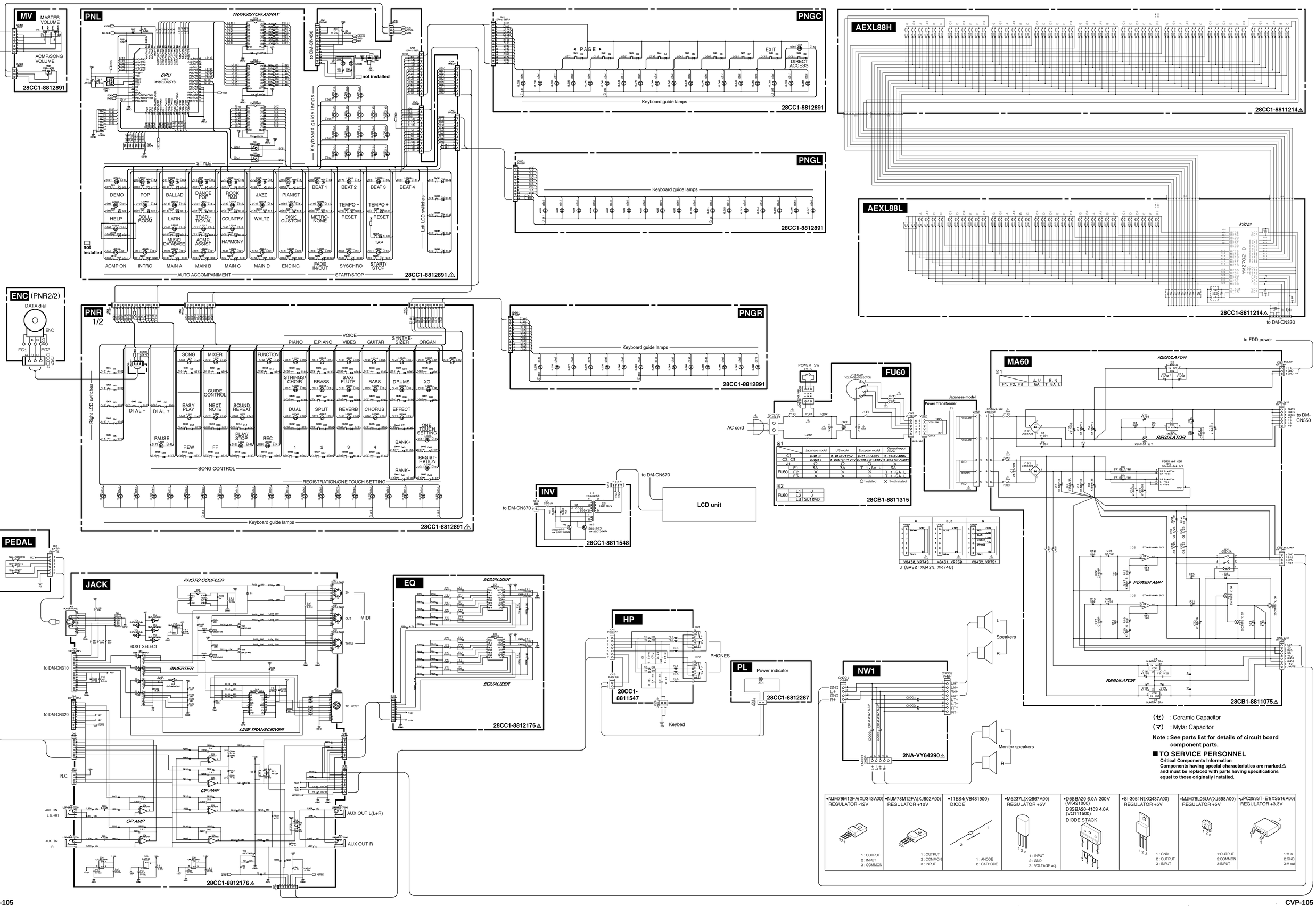

CVP-105