Clavinova®

CVP-103/CVP-103M

SERVICE MANUAL



■ CONTENTS

SPECIFICATIONS 3
CIRCUIT BOARD LAYOUT 4
PANEL LAYOUT 6
BLOCK DIAGRAM 7
DISASSEMBLY PROCEDURE 8
LSI PIN DESCRIPTION 13
IC BLOCK DIAGRAM 18
CIRCUIT BOARDS 19
TEST PROGRAM 26
CONNECTING CABLES 27
MESSAGES 28
MIDI IMPLEMENTATION CHART 32
MIDI DATA FORMAT 33
PARTS LIST
OVERALL CIRCUIT DIAGRAM

CL 001623

YAMAHA

HAMAMATSU, JAPAN

1.75K-4101 Printed in Japan '99.03

IMPORTANT NOTICE

This manual has been provided for the use of authorized Yamaha Retailers and their service personnel. It has been assumed that basic service procedures inherent to the industry, and more specifically Yamaha Products, are already known and understood by the users, and have therefore not been restated.

WARNING: Failure to follow appropriate service and safety procedures when servicing this product may result in personal injury, destruction of expensive components and failure of the product to perform as specified. For these reasons, we advise all Yamaha product owners that all service required should be performed by an authorized Yamaha Retailer or the appointed service representative.

IMPORTANT: This presentation or sale of this manual to any individual or firm does not constitute authorization, certification, recognition of any applicable technical capabilities, or establish a principal-agent relationship of any form.

The data provided is belived to be accurate and applicable to the unit(s) indicated on the cover. The research engineering, and service departments of Yamaha are continually striving to improve Yamaha products. Modifications are, therefore, inevitable and changes in specification are subject to change without notice or obligation to retrofit. Should any discrepancy appear to exist, please contact the distributor's Service Division.

WARNING: Static discharges can destroy expensive components. Discharge any static electricity your body may have accumulated by grounding yourself to the ground buss in the unit (heavy gauge black wires connect to this buss.)

IMPORTANT: Turn the unit OFF during disassembly and parts replacement. Recheck all work before you apply power to the unit.

WARNING: CHEMICAL CONTENT NOTICE!

The solder used in the production of this product contains LEAD. In addition, other electrical/electronic and/or plastic (where applicable) components may also contain traces of chemicals found by the California Health and Welfare Agency (and possibly other entities) to cause cancer and/or birth defects or other reproductive harm.

DO NOT PLACE SOLDER, ELECTRICAL/ELECTRONIC OR PLASTIC COMPONENTS IN YOUR MOUTH FOR ANY REASON WHAT SO EVER!

Avoid prolonged, unprotected contact between solder and your skin! When soldering, do not inhale solder fumes or expose eyes to solder/flux vapor!

If you come in contact with solder or components located inside the enclosure of this product, wash your hands before handling food.

■ WARNING

Components having special characteristics are marked ⚠ and must be replaced with parts having specification equal to those originally installed.

SPECIFICATIONS

		CVP-103/103M
Keyboard		GH (Graded Hammer) 88 keys
Cabinet	**Finish**	Dark Rosewood woodgrain (CVP-103M: Mahogany woodgrain)
	Key Cover	Sliding (depends on version)
	Pedals	3
Tone Generation		AWM (Advanced Wave Memory) with Stereo Sampling
Polyphony		64
Voices	**Normal**	195
	XG	480
	Drum Kits	12
	Sweet Voices	Trumpet
Effects	**Reverb**	12
	Chorus	9
	Effect 1	45
Guide		Easy Play, Next Note, Sound Repeat
Auto Accompaniment		Single Finger, Multi Finger, Fingered1, Fingered2, Full Keyboard
	Styles	125
	Variations	4 for each style
	Pianist Styles	35
	Custom Styles	4
	One Touch Setting	4 for each style
	Music Database	468
Song		99 (Recoding Song 60)
	Lyric Display	Yes
	Recording Tracks	16
	Registration Memory	20
	Demo Songs	50
Sound System	**Amplifiers**	40 W x 2
	Main Speakers	16 cm x 2
	Monitor Speakers	5 cm x 2
Jacks and Terminals	**MIDI**	IN/OUT/THRU
	PC Interface	TO HOST
	AUX IN/OUT	L/L+R, R
	Headphones	2
Dimension		H 85.4 cm x D 56.1 cm x W 139.4 cm
Weight		54.0 kg

■ CIRCUIT BOARD LAYOUT

Location	Parts No.	Connector Assembly	Destination		Remarks
610	V385400	MIC-LF	MIC-CN1	JACK-CN4	700L
490	VK11670	KRD-KRD (HP)	HP-CN1	JACK-CN7	7P-650L
560	VL50740	HP (Ground wire)	HP-CN3	KEY BED	
500	V325840	MK-LF	KB	DM-CN330	
510	V404600	KRD-KRD (Dgtal power supply)	DM-CN350	MA60-CN4	7P-500L
520	VK10280	KRD-KRD (ANLG power supply)	JACK-CN6	MA60-CN6	9P-200L
530	V326810	SP	NET1-CN002	MAIN.SP-L/R	
6	V326150	FDD-SIG	DM-CN750	FDD	900L
550	VV65200	FDD (power supply)	MA60-CN3	FDD	
570	VK10520	KRD-KRD (PL)	HP-CN2	PL-CN1	2P-300L
540	V326110	PU (Network)	NET1-CN001	MA60-CN3	
A	V327820	PN-LF	DM-CN450	PN-CN001	
B	V325900	VOL	JACK-CN3	PN-CD301	550L
C	V326130	MON-SP	NET1-CN003	MON-L/R	
D	V327860	LCD-FL	DM-CN650	LCD	
E	VV85420	Back light	DM-CN360	LED	
F	VV65000	Power-SW	FU60-cn1	POW.SW	

Note1 : Connector assembly listed above not available as servicing parts except VV65200 and VK10520.

Note2 : LUG Terminals (L-1,2) are used for UL/CSA destination only.

Note3 : FDD-SIG wire harness is installed with its connector guide looks down.

Note4 : The meaning of symbols.

 : VD94780 Ferrite Core

 : CB81750 Cabel Holder

 : LUG Terminal

 : VU89130 Cord Binder (Vinyl Tie)

 : VP83460 Filament Tape

 : Connector Direction 

 : Connector Direction 

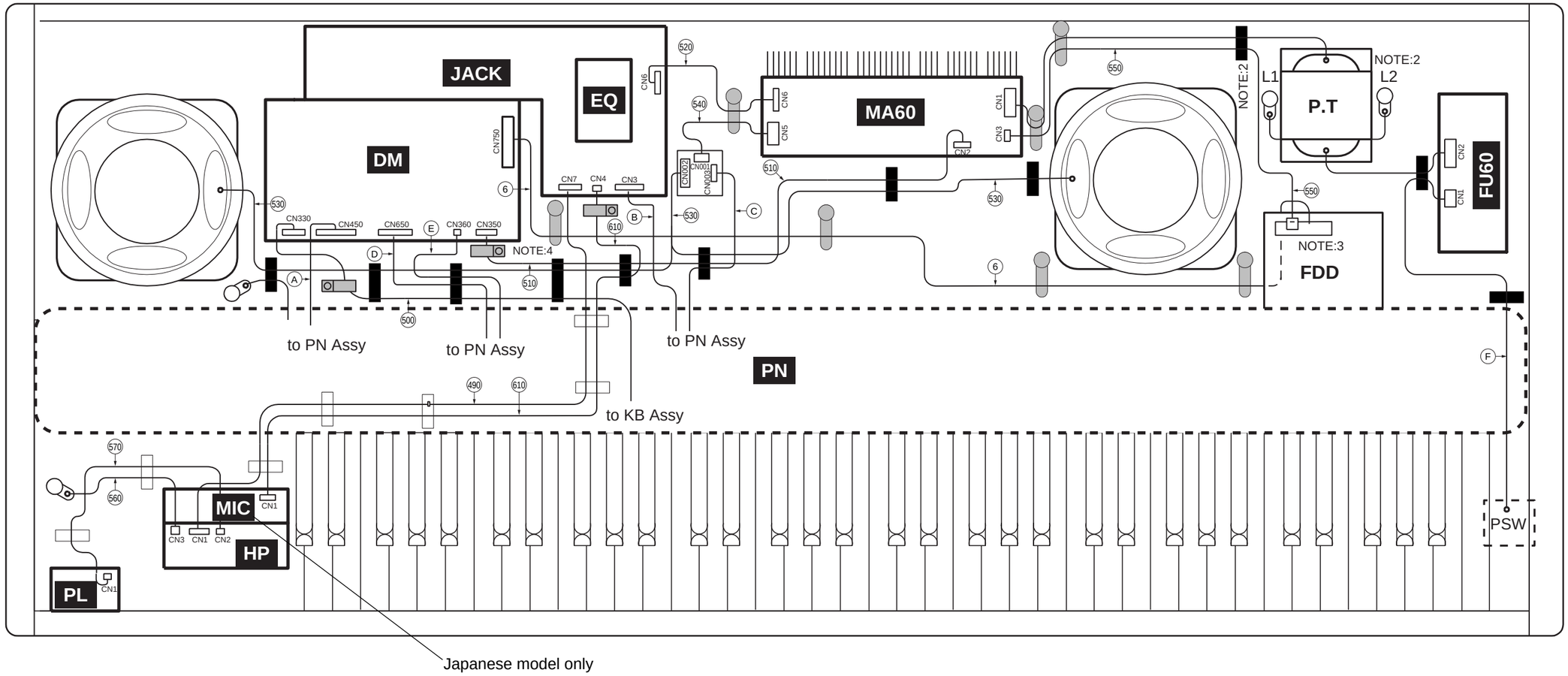
JACK
EQ
DM
MA60
P.T
FU60
FDD
PN
MIC
HP
PL
PSW
NOTE:2
NOTE:3
NOTE:4
L1
L2
CN6
CN5
CN1
CN2
CN3
CN4
CN7
CN750
CN330
CN450
CN650
CN360
CN350
CN002
CN001
CN003
to PN Assy
to PN Assy
to PN Assy
to KB Assy
Japanese model only

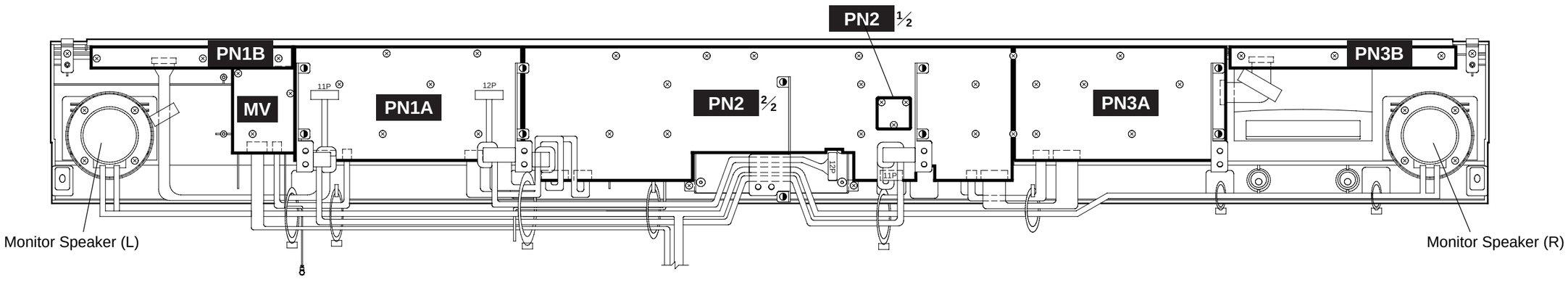
PN1B
MV
PN1A
PN2 1/2
PN2 2/2
PN3A
PN3B
11P
12P
12P
11P
Monitor Speaker (L)
Monitor Speaker (R)

2NC-V323520⚠

■ PANEL LAYOUT

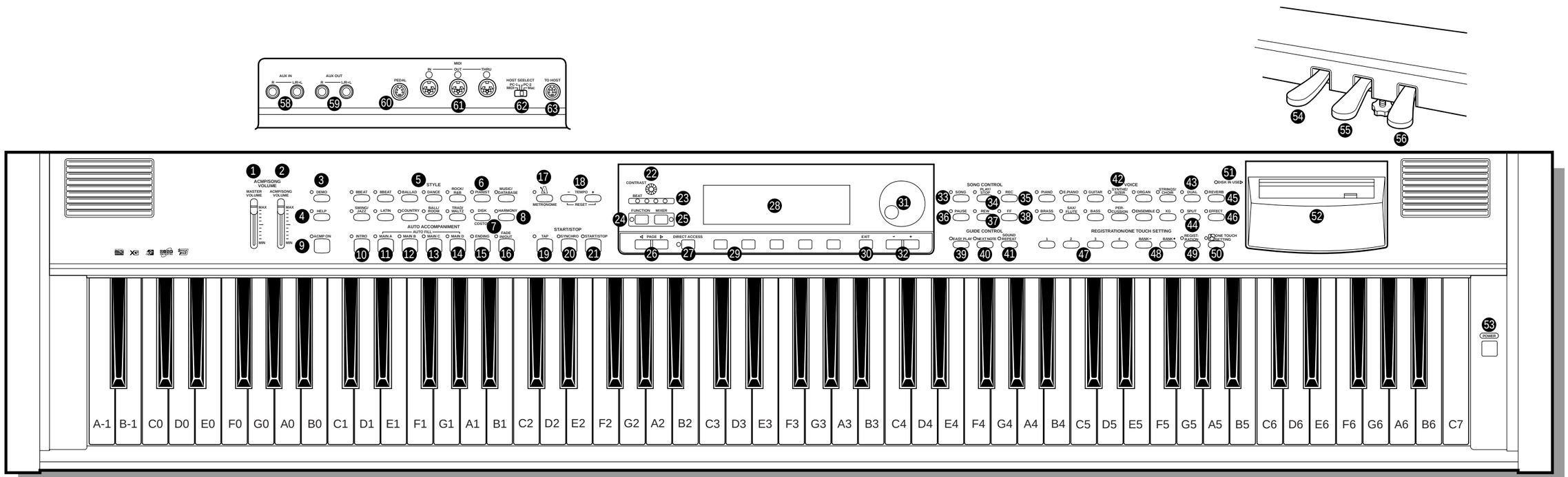

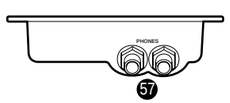

Volume Section

1. [MASTER VOLUME] knob
2. [ACMP/SONG VOLUME] knob
3. [DEMO] button
4. [HELP] button

Accompanimient Style Section

5. STYLE buttons button
6. [PIANIST] button
7. [DISK/COSTOM] button
8. [HARMONY] button
9. [ACMP ON] button
10. [INTRO] button
11. [MAIN A] button
12. [MAIN B] button
13. [MAIN C] button
14. [MAIN D] button
15. [ENDING] button
16. [FADE IN/OUT] button
17. [METRONOME] button
18. TEMPO [–/+] button

Start/Stop Section

19. [TAP] button
20. [SYNCHRO] button
21. [START/STOP] button

Display Control Section

22. [CONTRAST] knob
23. [BEAT] button
24. [FUNCTION] button
25. [MIXER] button
26. PAGE [◁], [▷] buttons
27. [DIRECT ACCESS] button
28. LCD display
29. LCD buttons
30. [EXIT] button
31. Data dial knob
32. [–/+] buttons

Song Control Section

33. [SONG] button
34. [PLAY/STOP] button
35. [REC] button
36. [PAUSE] button
37. [REW] button
38. [FF] button

Guide Control Section

39. [EASY PLAY] button
40. [NEXT NOTE] button
41. [SOUND REPEAT] button

Voice Section

42. VOICE buttons
43. [DUAL] button
44. [SPLIT] button
45. [REVERB] button
46. [EFFECT] button

Registration Section

47. REGISTRATION [1] - [4] buttons
48. BANK [–] [+] buttons
49. [REGIST-RATION] button
50. [ONE TOUCH SETTING] button
51. DISK IN USE lamp
52. Floppy disk drive (3.5")
53. [POWER] switch
54. Soft pedal
55. Sostenuto pedal
56. Damper pedal
57. [PHONES] jacks
58. AUX IN [R], [L/R+L] jacks
59. AUX OUT [R], [L/R+L] jacks
60. [PEDAL] terminal
61. MIDI [IN], [OUT], [THRU] terminals
62. [HOST SEELECT] switch
63. [TO HOST] terminal

■ BLOCK DIAGRAM

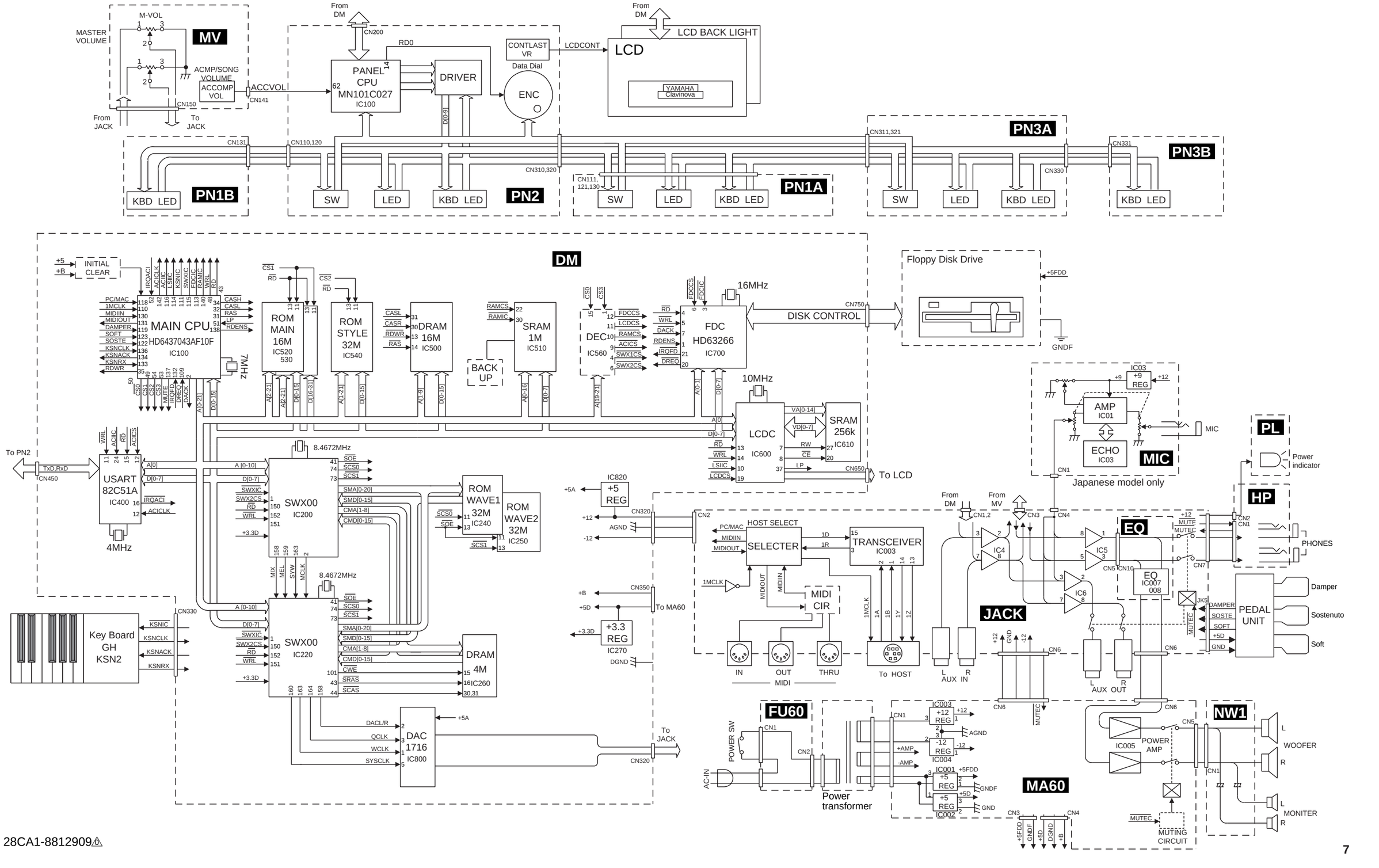

■ DISASSEMBLY PROCEDURE

1 Top Board Assembly

1-1 Disconnect the PK cable. (Fig. 2)
1-2 Disconnect the AC cord. (Fig. 16)
1-3 Remove the three (3) screws marked [420]. The top board can then be removed by sliding and lifting up. (Fig. 1)

* After removing the top board assembly, the following circuit boards and units can be checked and/or removed by removing the screws. (Fig. 3)

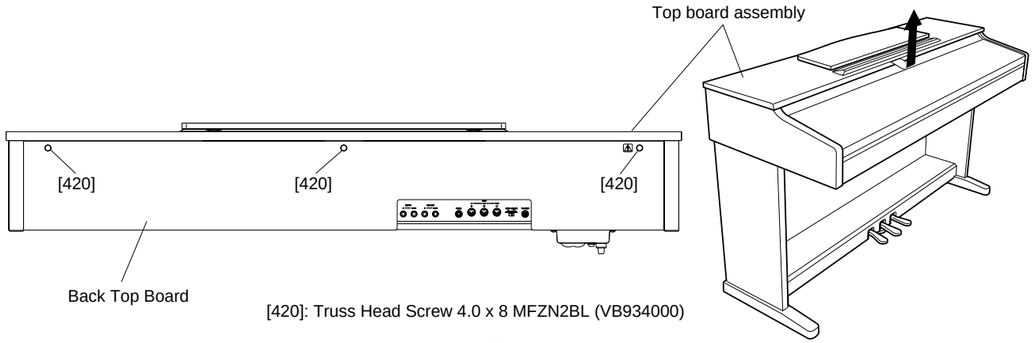

[420]: Truss Head Screw 4.0 x 8 MFZN2BL (VB934000)

(Fig. 1)

1-A DM circuit board:
Remove the connector plug marked [CN001].
Remove the connector plug marked [CN002].
Remove the six (6) screws marked [405A].

1-B JACK circuit board:
Disconnect the PK cable. (Fig. 2)
Remove the three (3) supports marked [A]. The EQ circuit board can then be removed. (Fig. 3)
Remove the connector plug marked [CN001].
Remove the connector plug marked [CN002].
Remove the seven (7) screws marked [405B]. The JACK assembly can then be removed. (Fig. 3)
Remove the three (3) screws marked [410]. The JACK circuit board can then be removed. (Fig. 3)

1-C NW1 circuit board:
Remove the four (4) screws marked [440].

1-D FU60 assembly:
Remove the two (2) screws marked [360A].
For US model: Before removing the FU60 assembly, it is necessary to remove the FU shield cover by removing the two (2) screws marked [305A].

1-E FDD assembly:
Remove the screws marked [360B] and [380], there are two of each. The FDD assembly can then be removed. (Fig. 3)
Remove the four (4) screws marked [5]. The floppy disk drive unit can then be removed. (Fig. 4)

1-F Power transformer:
Remove the four (4) screws marked [310].

1-G MA60 assembly:
Remove the two (2) screws marked [360C].
For US model: Before removing the MA60 assembly, it is necessary to remove the MA cover by removing the two (2) screws marked [305B].

1-H Speakers:
Remove the four (4) screws marked [390].
* The right and left speakers can be removed in the same manner.

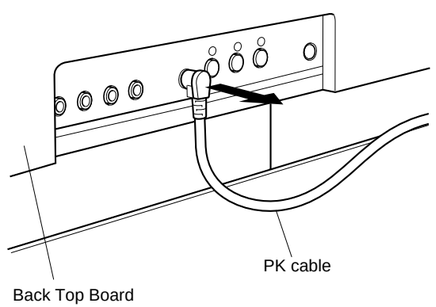

(Fig.2)

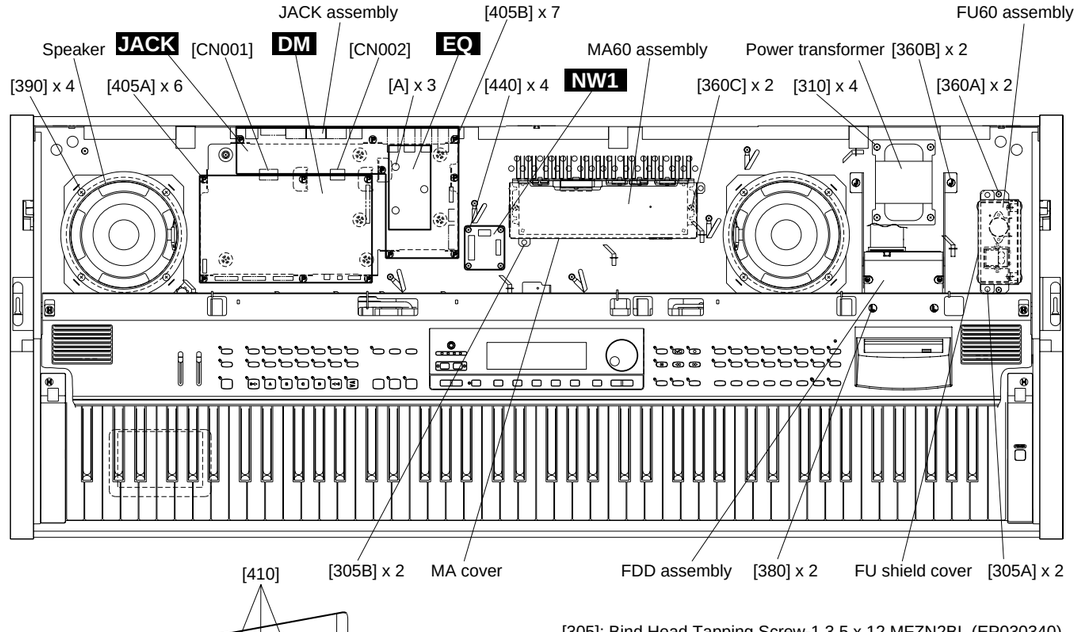

[305]: Bind Head Tapping Screw-1 3.5 x 12 MFZN2BL (EP030340)
[310]: Bind Head Screw 4.0 x 14 MFZN2Y (EG340210)
[360]: Bind Head Tapping Screw-1 3.5 x 12 MFZN2BL (EP030340)
[380]: Bind Head Screw 4.0 x 14 MFZN2Y (EG340210)
[390]: Bind Head Tapping Screw-1 4 x 20 MFZN2Y (20338800)
[405]: Bind Head Tapping Screw-B 3.0 x 8 MFZN2Y (EP600250)
[410]: Bind Head Tapping Screw-B 3.0 x 8 MFZN2BL (EP600190)
[440]: Bind Head Tapping Screw-1 3.5 x 20 MFZN2Y (EP030470)

(Fig.3)

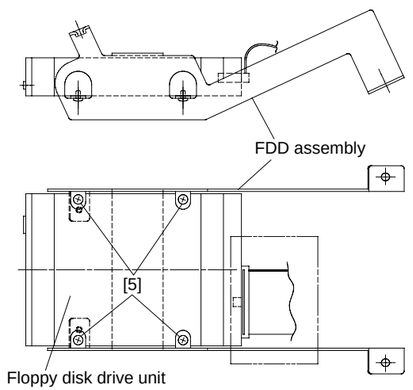

[5]: Truss Head Screw 4.0 x 8 MFZN2BL (VB934000)

(Fig. 4)

2 Key Cover Assembly

2-1 Remove the top board assembly. (See Procedure 1.)

2-2 Remove the screw marked [335]. The rack cover can then be removed. (Fig. 5)

* The right and left rack covers can be removed in the same manner.

2-3 Set the either end of the rod at the slits of the guide and then the key cover assembly.

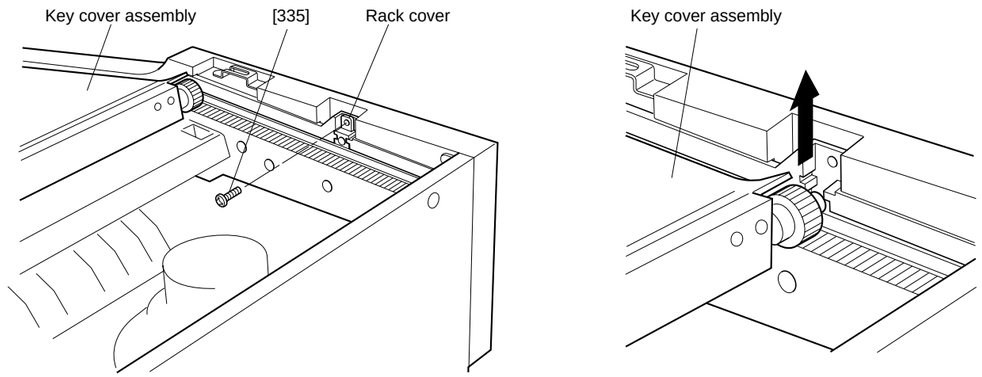

[335]: Bind Head Tapping Screw-B 3.0 x 8 MFZN2Y (EP600250)

(Fig.5)

3 Control Panel Assembly

3-1 Remove the top board assembly. (See Procedure 1.)

3-2 Remove the key cover assembly. (See Procedure 2.)

3-3 Remove the FDD assembly. (See Procedure 1.)

3-4 Remove the two (2) screws marked [350A]. The four (4) screws marked [360D]. The control panel assembly can then be removed. (Fig. 6)

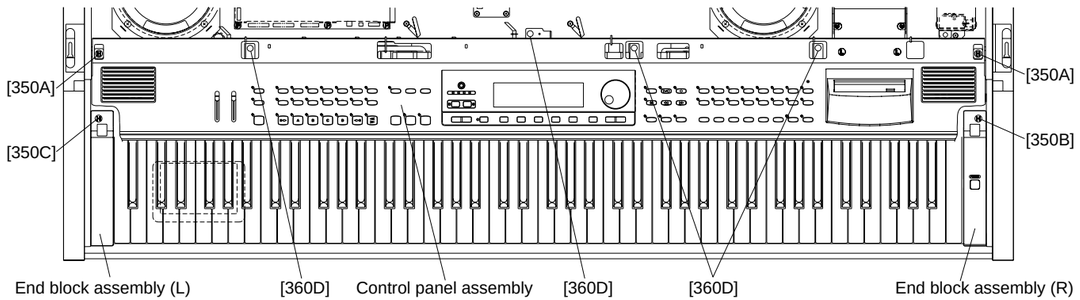

[350]: Bind Head Tapping Screw-B 4.0 x 10 MFZN2BL (EP600240)
[360]: Bind Head Tapping Screw-1 3.5 x 12 MFZN2BL (EP030340)

(Fig.6)

* After removing the control panel assembly, the following circuit boards and units can be checked and/or removed by removing the following parts and screws. (Fig. 7)

3-A PN1A circuit board:
Ten (10) screws marked [250] and panel holder A.

3-B PN1B circuit board:
Three (3) screws marked [250].

3-C PN2 1/2 circuit board:
Three (3) screws marked [250] and encoder knob.

3-D PN2 2/2 circuit board:
Nineteen (19) screws marked [250], PN2 1/2 circuit board, panel holder A and panel holder B.

3-E PN3A circuit board:
Ten (10) screws marked [250] and panel holder A.

3-F PN3B circuit board:
Three (3) screws marked [250].

3-G MV circuit board:
Three (3) screws marked [250], PN1A and PN1B circuit board and two (2) slide knobs.

3-H LCD assembly:
Two (2) screws marked [250], PN2 1/2 and 2/2 circuit boards, LCD base and LCD spacer assembly.

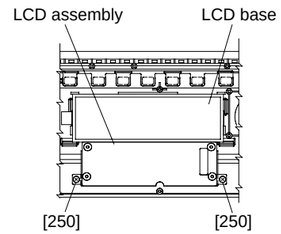

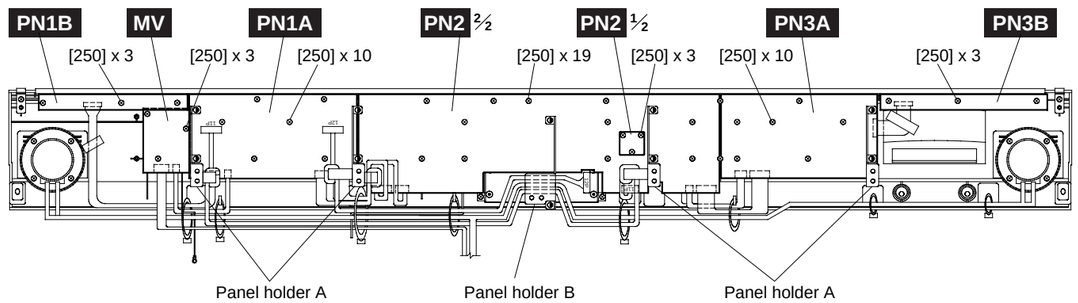

[250]: Bind Head Tapping Screw-B 3.0 x 8 MFZN2Y (EP600250)

(Fig. 7)

4 Power Switch Assembly

4-1 Remove the top board assembly. (See Procedure 1.)

4-2 Remove the key cover assembly. (See Procedure 2.)

4-3 Remove the control panel assembly. (See Procedure 3.)

4-4 Remove the screw marked [350B]. The right end block can then be removed. (Fig. 6)

4-5 Remove the two (2) screws marked [30]. The power switch can then be removed. (Fig. 8)

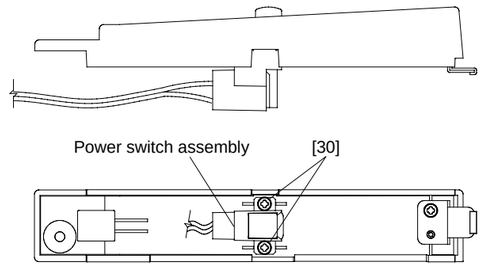

[30]: Bind Head Tapping Screw-B 3.0 x 8 MFZN2BL (EP600190)

(Fig. 8)

5 Keyboard Assembly

5-1 Remove the top board assembly. (See Procedure 1.)

5-2 Remove the key cover assembly. (See Procedure 2.)

5-3 Remove the control panel assembly. (See Procedure 3.)

5-4 Remove the right end block. (See Procedure 4-4.)

5-5 Remove the screw marked [350C]. The left end block can then be removed. (Fig. 6)

5-6 Remove the two (2) screws marked [340], the nine (9) screws marked [330]. The keyboard assembly can then be removed. (Fig. 9)

* When you take the keyboard unit out of the main unit, slide it backward and hold the middle of it. Lift the keyboard unit from the front and take it out of the main unit as shown in the figures. (Fig. 10 and Fig. 11)

* Do not hold both ends of the keyboard.

* When mounting the keyboard assembly, tighten screws in this order: [340] and [330].

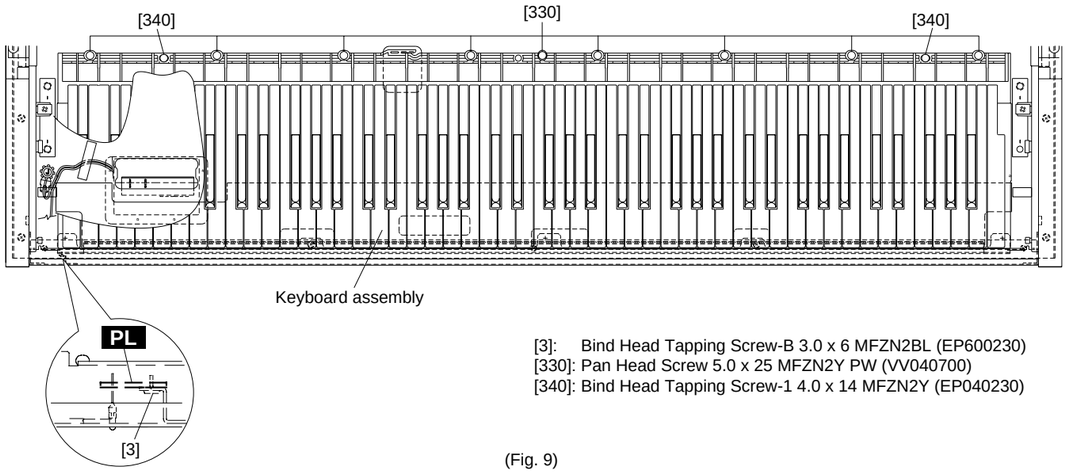

[3]: Bind Head Tapping Screw-B 3.0 x 6 MFZN2BL (EP600230)
[330]: Pan Head Screw 5.0 x 25 MFZN2Y PW (VV040700)
[340]: Bind Head Tapping Screw-1 4.0 x 14 MFZN2Y (EP040230)

(Fig. 9)

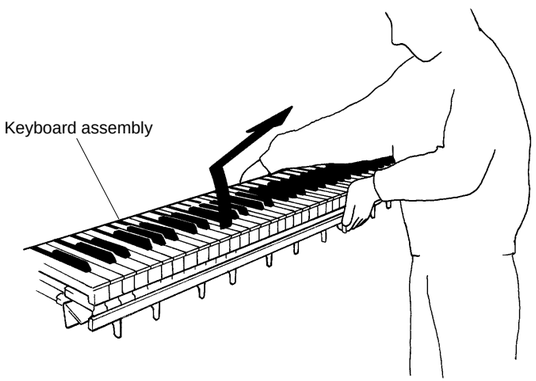

(Fig. 10)

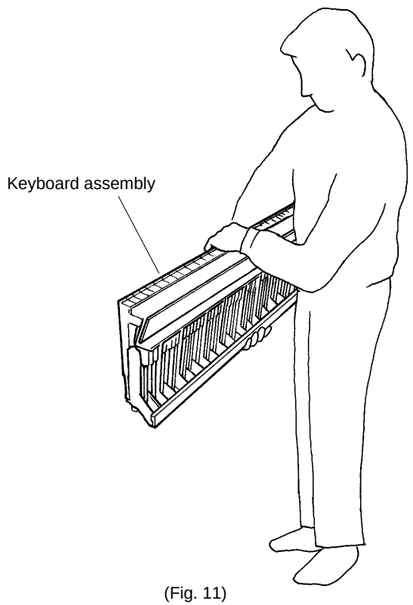

(Fig. 11)

6 PL Circuit Board

6-1 Remove the top board assembly. (See Procedure 1.)
6-2 Remove the key cover assembly. (See Procedure 2.)
6-3 Remove the control panel assembly. (See Procedure 3.)
6-4 Remove the keyboard assembly. (See Procedure 5.)
6-5 Remove the screw marked [3]. The PL circuit board can then be removed. (Fig. 9)

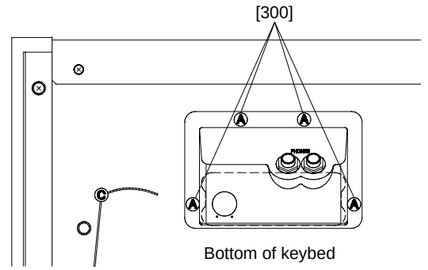

[300]: Bind Head Tapping Screw-1 3.5 x 14 MFZN2BL (EP030250)

(Fig. 12)

7 HP Circuit Board

7-1 Remove the top board assembly. (See Procedure 1.)
7-2 Remove the key cover assembly. (See Procedure 2.)
7-3 Remove the control panel assembly. (See Procedure 3.)
7-4 Remove the keyboard assembly. (See Procedure 5.)
7-5 Remove the four (4) screws marked [300]. The headphone jack unit can then be removed. (Fig. 12)
7-6 Remove the two (2) hexagonal nuts marked [40]. The HP circuit board can then be removed. (Fig. 13)

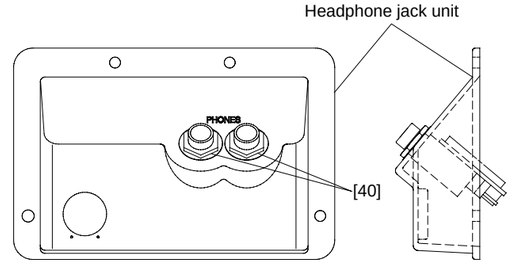

[40]: Hexagonal Nut 12.0 14 x 2 MFZN2BL (VB508600)

(Fig. 13)

8 Pedal Assembly

8-1 Disconnect the PK cable. (Fig. 14)
8-2 Lay down the unit on a soft blanket placed on the floor, taking care not to damage the unit.
8-3 Remove the eight (8) screws marked [8]. The pedal assembly can then be removed. (Fig. 15)

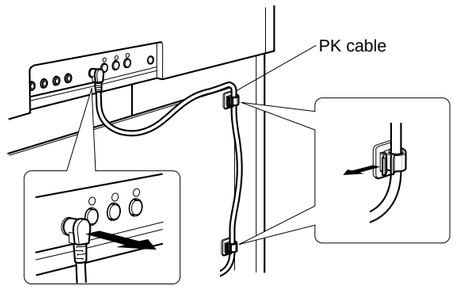

(Fig. 14)

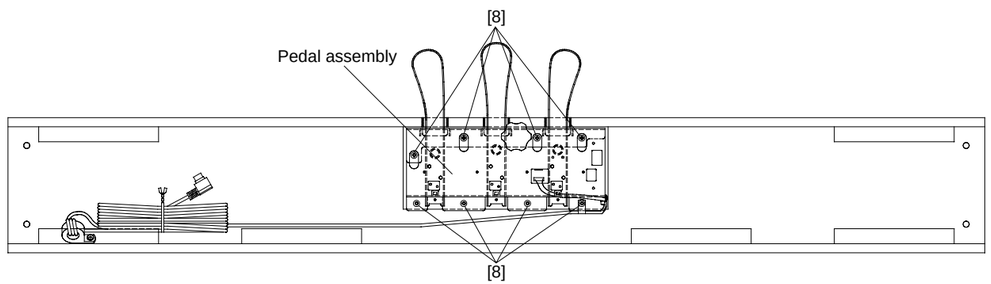

[8]: Bind Head Tapping Screw-1 4.0 x 14 MFZN2Y (EP040230)

(Fig. 15)

9 Main Unit

9-1 Disconnect the PK cable. (See Procedure 8-1.)

9-2 Disconnect the AC cord. (Fig. 16)

9-3 Remove the four (4) screws marked [S3]; slide main unit forward lifting it up to remove. (Fig. 17 and 18)

* Be sure to place your hands at least 10 cm from either end of the main unit and take care not to pinch your fingers when removing it.

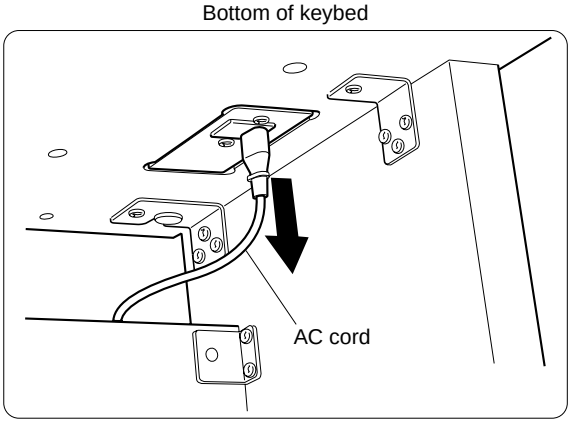

(Fig. 16)

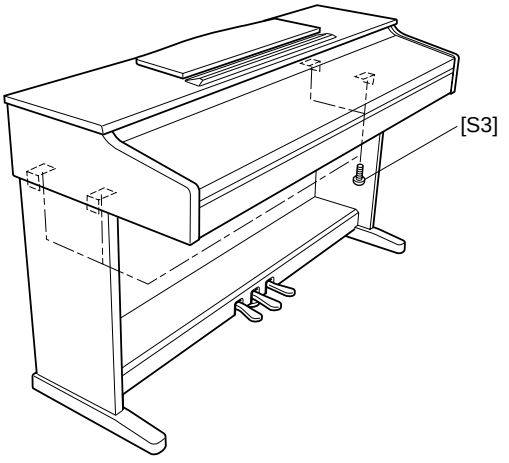

[S3]: Bind Head Screw 6.0 x 16 MFZN2BL (EG360020)

(Fig. 17)

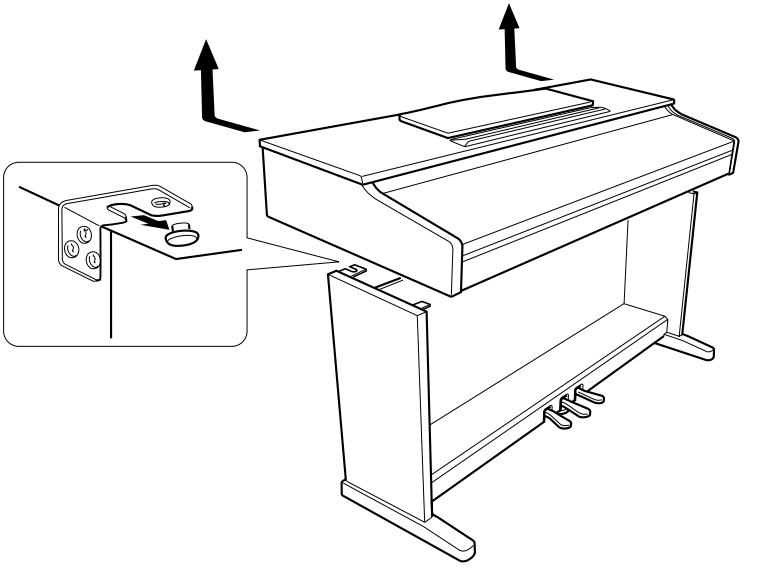

(Fig. 18)

10 Disassembling the Keyboard

* After inserting a round stick or similar material between the frame and key, remove the circuit boards. (Fig. 19)

10-1 Take the keyboard unit out of the main unit. (See Procedure 5.)

10-2 Remove the AEXL88 L circuit board by removing the seven (7) screws marked as [260A]. (Fig. 20)

10-3 Remove the AEXL88 H circuit board by removing the ten (10) screws marked as [260B].

* Keys can be removed without removing the circuit boards.

10-4 Insert a thin plate between white keys near the triangle mark around the fulcrum of the key and press the stopper marked [A] down to remove the key. (Fig. 19)

* Take care not to damage the key spring when removing a key.

* A black key can be removed after both adjacent white keys have been removed.

10-5 After a key has been removed, push the key spring down once to take it out of the hook. (Fig. 21)
Place the keyboard unit upside down and peel back the stopper, then the hammer of the white key which has been removed can be removed. (Fig. 22)

* The hammer of a black key can be removed in the same manner.

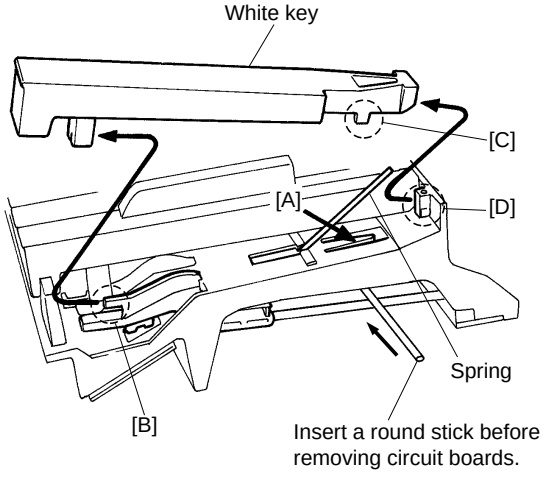

(Fig. 19)

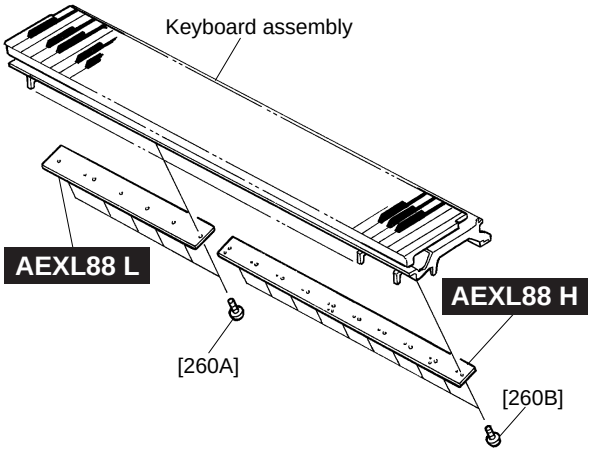

[260]: Bind Head Tapping Screw-P 3.0 x 10 MFZN2 (VT413400)

(Fig. 20)

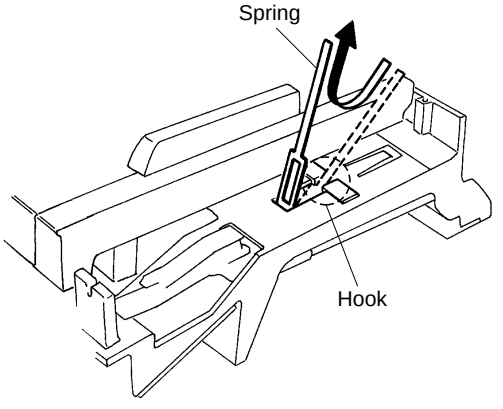

(Fig. 21)

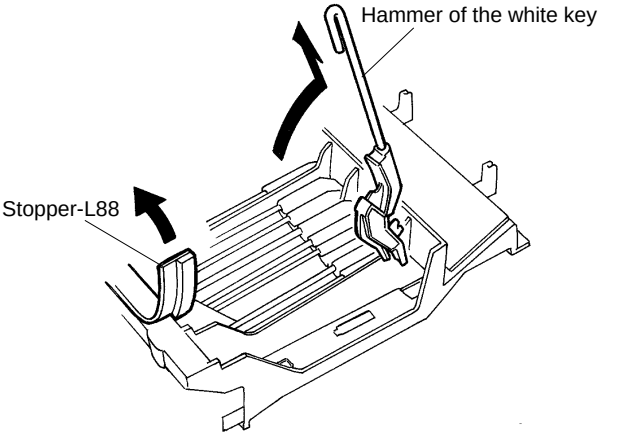

(Fig. 22)

■ LSI PIN DESCRIPTION

● **HD6477043AF28** (XV665B00) **CPU**

DM : IC100

PIN NO.	NAME	I/O	FUNCTION	PIN NO.	NAME	I/O	FUNCTION
1	/WRHH	O	HH write	73	D15	I/O	
2	PE14	O	Port E	74	D14	I/O	Data bus
3	/WRHL	O	HL write	75	D13	I/O	
4	CASHH/PA21	I/O	HH Column address strobe/Port A	76	D12	I/O	
5	DACK1/PE15	O	DMA transfer strobe/Port E	77	VCC	I	Power supply
6	VSS	I	Ground	78	D11	I/O	Data bus
7	A0	O		79	VSS	I	Ground
8	A1	O		80	D10	I/O	
9	A2	O	Address bus	81	D9	I/O	
10	A3	O		82	D8	I/O	Data bus
11	A4	O		83	D7	I/O	
12	VCC	I	Power supply	84	D6	I/O	
13	A5	O	Address bus	85	VCC	I	Power supply
14	VSS	I	Ground	86	D5	I/O	Data bus
15	A6	O		87	VSS	I	Ground
16	A7	O		88	D4	I/O	
17	A8	O		89	D3	I/O	
18	A9	O		90	D2	I/O	Data bus
19	A10	O		91	D1	I/O	
20	A11	O	Address bus	92	D0	I/O	
21	A12	O		93	VSS	I	Ground
22	A13	O		94	XTAL	I	Crystal oscillator
23	A14	O		95	MD3	I	Mode select
24	A15	O		96	EXTAL	I	Crystal oscillator
25	A16	O		97	MD2	I	Mode select
26	VCC	I	Power supply	98	NMI	-	Non-maskable interrupt
27	A17	O	Address bus	99	VCC	I	Power supply
28	VSS	I	Ground	100	PA16	I/O	Port A
29	/CASHL/PA20	I/O	HL Column address strobe/Port A	101	PA17	I/O	Port A
30	PA19	I/O	Port A	102	MD1	I	Mode select
31	/RAS/PB2	O	Row address strobe/Port B	103	MD0	I	Mode select
32	/CASL/PB3	O	Column address strobe (low) /Port B	104	PLLVCC	I	PLL Power supply
33	PA18	I/O	Port A	105	PLLCAP	I	PLL capacitor
34	/CASH/PB4	O	Column address strobe (high) /Port B	106	PLLVSS	I	PLL Ground
35	VSS	I	Ground	107	CK/PA15	I/O	Clock/Port A
36	RDWR/PB5	O	DRAM read/write /Port B	108	/RES	I	Reset
37	A18	O		109	TIOC0A/PE0	I/O	MTU input capture/output compare (ch 0)/Port E
38	A19	O	Address bus	110	PE1	I/O	Port E
39	A20	O		111	/DREQ1/PE2	I/O	DMA transfer request/Port E
40	VCC	I	Power supply	112	VCC	I	Power supply
41	A21	O	Address bus	113	PE3	I/O	
42	VSS	I	Ground	114	PE4	I/O	Port E
43	/RD	O	Read	115	PE5	I/O	
44	/WDTOVF	O	Watch dog timer overflow	116	PE6	I/O	
45	D31	I/O	Data bus	117	VSS	I	Ground
46	D30	I/O	Data bus	118	AN0 /PF0	I	
47	/WRH	O	High write	119	AN1/ PF1	I	
48	/WRL	O	Low write	120	AN2 /PF2	I	
49	/CS1	O	Chip select	121	AN3 /PF3	I	Analog input/Port F
50	/CS0	O	Chip select	122	AN4 /PF4	I	
51	/IRQ3/PA9	I/O	Interrupt request/Port A	123	AN5/PF5	I	
52	/IRQ2/PA8	I/O	Interrupt request/Port A	124	AVSS	I	Analog ground
53	/CS3	O	Chip select	125	AN6/PF6	I	Analog input/ Port F
54	/CS2	O	Chip select	126	AN7/PF7	I	Analog input /Port F
55	VSS	I	Ground	127	AVREF	I	Analog reference voltage
56	D29	I/O		128	AVCC	I	Analog power supply
57	D28	I/O		129	VSS	I	Ground
58	D27	I/O	Data bus	130	RxDO	I	Receive data
59	D26	I/O		131	TxDO	O	Transmit data
60	D25	I/O		132	/IRQ0/SCK0	I	Interrupt request/Serial clock
61	VSS	I	Ground	133	RxD1	I	Receive data
62	D24	I/O	Data bus	134	TxD1	I/O	SCI
63	VCC	I	Power supply	135	VCC	I	Power supply
64	D23	I/O		136	/IRQ1/SCK1	I	Interrupt request/Serial clock
65	D22	I/O		137	PE7	I/O	
66	D21	I/O		138	PE8	I/O	Port E
67	D20	I/O	Data bus	139	PE9	I/O	
68	D19	I/O		140	PE10	I/O	
69	D18	I/O		141	VSS	I	Ground
70	D17	I/O		142	PE11	I/O	
71	VSS	I	Ground	143	PE12	I/O	Port E
72	D16	I/O	Data bus	144	PE13	I/O	

● **MN101C027YB** (XS711200) **CPU** PN2 : IC100

PIN NO.	NAME	I/O	FUNCTION	PIN NO.	NAME	I/O	FUNCTION
1	S1	I		33	S12	I	
2	S2	I		34	S13	I	Switch matrix data
3	S3	I	Switch matrix data	35	S14	I	
4	S4	I		36	TXD	O	MIDI transmit data
5	S5	I		37	S15	I	
6	VREF+	-	Power supply (+5 V, analog)	38	S16	I	Switch matrix data
7	VDD	-	Power supply (+5 V)	39	S17	I	
8	OSC2	O	Crystal oscillator (8 MHz)	40	S18	I	
9	OSC1	I	Crystal oscillator (8 MHz)	41	L16	O	
10	VSS	-	Ground	42	L17	O	
11	XI	I	Not used	43	L18	O	
12	XO	O	Not used	44	L19	O	
13	MMOD	I	Memory mode select (Grounded)	45	L8	O	
14	RD0	O	Rotary encoder data	46	L9	O	
15	RXD	I	MIDI receive data	47	L10	O	LED drive data
16	D0	O		48	L11	O	
17	D1	O		49	L12	O	
18	D2	O	LED and switch drive data	50	L13	O	
19	D3	O		51	L14	O	
20	D4	O		52	L15	O	
21	/RST	I	Reset	53	L7	O	
22	D5	O		54	L6	O	
23	D6	O		55	L5	O	
24	D7	O	LED and switch drive data	56	L4	O	
25	D8	O		57	L3	O	LED and switch drive data
26	D9	O		58	L2	O	
27	S6	I		59	L1	O	
28	S7	I		60	L0	O	
29	S8	I		61	VREF	-	Grounded
30	S9	I	Switch matrix data	62	AD0	I	Analog input
31	S10	I		63	AD1	I	Analog input
32	S11	I		64	S0	I	Switch matrix data

● **HD63266F** (XI939A00) **FDC** (Floppy Disk Controller) DM : IC700

PIN NO.	NAME	I/O	FUNCTION	PIN NO.	NAME	I/O	FUNCTION
1	8"//5"	I	Data transmission speed	33	/TRKO	I	Track 00 signal
2	XTALSET	I	Clock select	34	/INDEX	I	Index signal
3	/RESET	I	Rest	35	/RDATA	I	Read data input from FDD
4	E//RD	I	Enable/Read	36	XTAL2		Clock
5	RW//WR	I	Read/write/Write	37	EXTAL2		
6	/CS	I	Chip select	38	NC		
7	/DACK	I	DMA acknowledge	39	XTAL1		Clock
8	RS0	I	Register select	40	EXTAL1		
9	RS1	I		41	VSS4		Ground
10	VSS1		Ground	42	VSS5		
11	VSS2			43	NC		
12	D0	I/O		44	VCC2		Power supply
13	D1	I/O		45	VCC3		
14	D2	I/O		46	VCC4		
15	D3	I/O	Data bus	47	/WGATE	O	Write control
16	D4	I/O		48	/WDATA	O	Writ data to FDD
17	D5	I/O		49	VSS6		Ground
18	D6	I/O		50	/STEP	O	Step signal to control head of FDD
19	D7	I/O		51	/HDIR	O	Direction
20	/DREQ	O	DMA request	52	/HLOAD	O	Head load
21	/IRQ	O	Interrupt request	53	/HSEL	O	Head select
22	/DEND	I	Data end	54	VSS7		Ground
23	VSS3		Ground	55	/DS0	O	
24	1/2 EX1			56	/DS1	O	Drive select
25	VCC1		Power supply	57	/DS2	O	
26	NUM1	I		58	/DS3	O	
27	NUM3	I		59	VSS8		Ground
28	IFS	I	Host interface select	60	/MON0	O	
29	SFORM	I	Format data	61	/MON1	O	Motor on
30	/INP	I	Index pulse	62	/MON2	O	
31	/READY	I	Ready from FDD	63	/MON3	O	
32	/WPRT	I	Write control signal	64	VSS9		Ground

● **HG73C205FD** (XU947B00) **SWX00B** TONE GENERATOR DM : IC200, 220

PIN NO.	NAME	I/O	FUNCTION	PIN NO.	NAME	I/O	FUNCTION
1	ICN	I	Initial clear	85	CMA3	O	Program address bus
2	RFCLKI	I	PLL Clock	86	CMA8	O	Program address bus
3	TM2	I	PLL Control	87	CMA2	O	Program address bus
4	AVDD_PLL		Power supply	88	CRD	O	read signal
5	AVSS_PLL		Ground	89	CMA1	O	Program address bus
6	MODE0	I	SWX dual mode	90	CUB	O	high byte effective signal
7	VCC7		Power supply	91	VCC91		Power supply
8	GND8		Ground	92	GHND92		Ground
9	XIN	I	crystal oscillator	93	CS1	O	CS signal
10	XOUT	O	crystal oscillator	94	CMA0	O	Program address bus
11	MODE1	I	SWX separate mode	95	CLB	O	low byte effective signal
12	TEST0	I	TEST pin	96	CMA12	O	Program address bus
13	TESTON	I	TEST pin	97	CMA11	O	Program address bus
14	AN0-P40	I	A/D converter	98	CMA10	O	Program address bus
15	AN1-P41	I	A/D converter	99	CMA9	O	Program address bus
16	AN2-P42	I	A/D converter	100	GND100		Ground
17	AN3-P43	I	A/D converter	101	CWE	O	write signal
18	AVDD_AN		Power supply	102	CMA16	O	Program address bus
19	AVSS_AN		Ground	103	CMA15	O	Program address bus
20	TXD0	O	for MIDI or TO-HOST	104	CMA14	O	Program address bus
21	TXD1	O	for MIDI	105	CMA13	O	Program address bus
22	EXCLK	I	Crystal oscillator	106	CMD8	I/O	Program memory Data bus
23	SMD11	I/O	Wave memory data bus	107	CMD7	I/O	Program memory Data bus
24	SMD4	I/O	Wave memory data bus	108	CMD9	I/O	Program memory Data bus
25	SMD3	I/O	Wave memory data bus	109	CMD6	I/O	Program memory Data bus
26	SMD12	I/O	Wave memory data bus	110	CMD10	I/O	Program memory Data bus
27	SMD10	I/O	Wave memory data bus	111	CMD5	I/O	Program memory Data bus
28	SMD5	I/O	Wave memory data bus	112	CMD11	I/O	Program memory Data bus
29	SMD2	I/O	Wave memory data bus	113	CMD4	I/O	Program memory Data bus
30	SMD13	I/O	Wave memory data bus	114	CMD12	I/O	Program memory Data bus
31	SMD9	I/O	Wave memory data bus	115	CMD3	I/O	Program memory Data bus
32	SMD6	I/O	Wave memory data bus	116	CMD13	I/O	Program memory Data bus
33	SMD1	I/O	Wave memory data bus	117	CMD2	I/O	Program memory Data bus
34	SMD14	I/O	Wave memory data bus	118	CMD14	I/O	Program memory Data bus
35	VCC35		Power supply	119	VCC119		Power supply
36	GND36		Ground	120	GND115		Ground
37	SMD8	I/O	Wave memory data bus	121	CMD1	I/O	Program memory Data bus
38	SMD7	I/O	Wave memory data bus	122	CMD15	I/O	Program memory Data bus
39	SMD0	I/O	Wave memory data bus	123	CMD0	I/O	Program memory Data bus
40	SMD15	I/O	Wave memory data bus	124	CMA21	O	Program address bus
41	SOE	O	read signal	125	PDT15	I/O	SWX access data bus
42	SWE	O	write signal	126	PDT14	I/O	SWX access data bus
43	SRAS	O	RAS signal	127	PDT13	I/O	SWX access data bus
44	SCAS	O	CAS signal	128	PDT12	I/O	SWX access data bus
45	REFRESH	O	REFRESH signal	129	PDT11	I/O	SWX access data bus
46	CS0	O	CS signal	130	PDT10	I/O	SWX access data bus
47	SMA0	O	Memory address bus	131	PDT9	I/O	SWX access data bus
48	SMA16	O	Memory address bus	132	PDT8	I/O	SWX access data bus
49	VCC49		Power supply	133	VCC133		Power supply
50	GND50		Ground	134	GND134		Ground
51	SMA1	O	Memory address bus	135	PDT7	I/O	SWX access data bus
52	SMA15	O	Memory address bus	136	PDT6	I/O	SWX access data bus
53	SMA2	O	Memory address bus	137	PDT5	I/O	SWX access data bus
54	SMA14	O	Memory address bus	138	PDT4	I/O	SWX access data bus
55	SMA3	O	Memory address bus	139	PDT3	I/O	SWX access data bus
56	SMA13	O	Memory address bus	140	PDT2	I/O	SWX access data bus
57	SMA4	O	Memory address bus	141	PDT1	I/O	SWX access data bus
58	SMA12	O	Memory address bus	142	PDT0	I/O	SWX access data bus
59	SMA5	O	Memory address bus	143	VCA143		Power supply
60	GND60		Ground	144	GND144		Ground
61	VCC61		Power supply	145	PAD2	I	SWX access address bus
62	SMA11	O	Memory address bus	146	PAD1	I	SWX access address bus
63	SMA6	O	Memory address bus	147	PAD0	I	SWX access address bus
64	SMA10	O	Memory address bus	148	VCC148		Power supply
65	SMA7	O	Memory address bus	149	GND149		Ground
66	SMA9	O	Memory address bus	150	PCS	I	Chip select
67	SMA17	O	Memory address bus	151	PWR	I	write enable
68	SMA8	O	Memory address bus	152	PRD	I	read enable
69	SMA18	O	Memory address bus	153	RXD0	I	for Midi or TO-HOST
70	SMA19	O	Memory address bus	154	RXD1	I	for Midi or Key scan
71	SMA20	O	Memory address bus	155	SCLKI	I	EXT Clock
72	SMA21	O	Memory address bus	156	ADIN	I	A/D converter
73	SMA22	O	Memory address bus	157	ADLR	O	A/D converter LR clock
74	SMA23	O	Memory address bus	158	DO0	O	DAC
75	CMA20	O	Program address bus	159	DO1	O	DAC
76	CMA19	O	Program address bus	160	SYSCLK	O	1/2 clock
77	VCC77		Power supply	161	VCC161		Power supply
78	GND78	O	Ground	162	GND162		Ground
79	CMA18	O	Program address bus	163	WCLK	O	for DAC LR clock
80	CMA17	O	Program address bus	164	QCLK	O	1/12 clock
81	CMA5	O	Program address bus	165	BCLK	O	IIS-DAC clock
82	CMA6	O	Program address bus	166	SYI	I	Synch signal
83	CMA4	O	Program address bus	167	IRQ0	I	Interrupt request
84	CMA7	O	Program address bus	168	NMI	I	Interrupt request

● **SED1335F0B** (XQ595A00) **LCDC** (LCD Controller) DM : IC600

PIN NO.	NAME	I/O	FUNCTION	PIN NO.	NAME	I/O	FUNCTION
1	VA5	O	VRAM address bus	31	XD2	O	Data bus output for 4 bit dot
2	VA4	O		32	XD1	O	
3	VA3	O		33	XD0	O	
4	VA2	O		34	XECL	O	S driver enable, chain clock
5	VA1	O		35	XSCL	O	Data bus shift clock
6	VA0	O		36	Vss	-	Ground
7	/VWR	O	VRAM read/write	37	LP	O	X driver latch pulse
8	/VCE	O	Memory control	38	WF	O	Frame signal for X/Y driver
9	/VRD	-	Not used	39	YDIS	O	Power down signal for displaying off mode
10	/RES	I	Initial clear	40	YD	O	Scan start signal
11	NC	-	Not used	41	YSCL	O	Scan shift clock
12	NC	-	Not used	42	VD7	I/O	VRAM data bus
13	/RD	I	Read strobe	43	VD6	I/O	
14	/WR	I	Write strobe	44	VD5	I/O	
15	SEL2	I	Bus select	45	VD4	I/O	
16	SEL1	I	Bus select	46	VD3	I/O	
17	OSC1	I	Clock	47	VD2	I/O	
18	OSC2	O	Clock	48	VD1	I/O	
19	/CS	I	Chip select	49	VD0	I/O	
20	A0	I	Data mode select	50	VA15	O	VRAM address bus
21	Vdd	-	Power supply	51	VA14	O	
22	D0	I/O	Data bus	52	VA13	O	
23	D1	I/O		53	VA12	O	
24	D2	I/O		54	VA11	O	
25	D3	I/O		55	VA10	O	
26	D4	I/O		56	VA9	O	
27	D5	I/O		57	VA8	O	
28	D6	I/O		58	VA7	O	
29	D7	I/O		59	VA6	O	
30	XD3	O	Data bus output for 4 bit dot	60	NC	-	Not used

● **YMZ702-D** (XR632A00) **KSN2** (Key Scanner) AEXL88L : IC1

PIN NO.	NAME	I/O	FUNCTION	PIN NO.	NAME	I/O	FUNCTION
1	BK5	O	Key block (open drein)	21	GND		Ground
2	BK4	O		22	VDD		Power supply
3	BK3	O		23	SO	O	Serial data
4	BK2	O		24	ACK	I	Acknowledge/mode select
5	BK1	O		25	XCK	I	Clock for serial data
6	BK0	O		26	/IC	I	Initial clear
7	MK15	I	First make contact	27	TST1	I	Test mode
8	MK14	I		28	TST2	I	(L,L: normal mode, others: test)
9	MK13	I		29	XCKINH	I	Inhibit of serial clock
10	MK12	I		30	BK14	O	Key block (open drein)
11	MK11	I		31	BK13	O	
12	MK10	I		32	BK12	O	
13	MK05	I	Second make contact	33	BK11	O	
14	MK04	I		34	BK10	O	
15	MK03	I		35	BK9	O	
16	MK02	I		36	BK8	O	
17	MK01	I		37	BK7	O	
18	MK00	I		38	BK6	O	
19	XIN	I	Crystal osc. input (4 MHz)	39	GND		Ground
20	XOUT	O	Crystal osc. output (4 MHz)	40	VDD		Power supply

● **MSM82C51A-2GS-K** (XV513A00)

USART (Universal Synchronous Asynchronous receiver Transmitter) DM : IC400

PIN NO.	NAME	I/O	FUNCTION	PIN NO.	NAME	I/O	FUNCTION
1	D2	I/O	Data Bus	17	TXRDY	O	character data
2	D3	I/O	Data Bus	18	SYNDET/BD	I/O	character data
3	RXD	I	Serial Data	19	/CTS	I	input terminal for modem interface
4	NC			20	NC		
5	GND		Ground	21	TXEMPTY	O	character data
6	D4	I/O	Data Bus	22	TXD	O	character data
7	D5	I/O	Data Bus	23	CLK	I	Clock
8	D6	I/O	Data Bus	24	RESET	I	Reset
9	D7	I/O	Data Bus	25	/DSR	I	input port for modem interface
10	/TXC	I	Clock	26	/RTS	O	output port for modem interface
11	/WR	I	Write signal	27	/DTR	O	output port for modem interface
12	/CS	I	Device select	28	/RXC	I	Clock
13	NC			29	NC		
14	C//D	I	Access select signal	30	VCC	I	Power supply
15	/RD	I	Read signal	31	D0	I/O	Data Bus
16	RXRDY	O	character data	32	D1	I/O	Data Bus

● **PCM1716E** (XU829A00) **DAC** (Digital to Analog Converter) DM : IC800

PIN NO.	NAME	I/O	FUNCTION	PIN NO.	NAME	I/O	FUNCTION
1	LRCK	I		15	Vcc1	-	Analog power supply (+5 V)
2	DATA	I	Data input	16	VOUTL	O	Lch, analog voltage output
3	BCK	I	Bit clock	17	NC	-	
4	CLKO	O	Clock input	18	EXTL	O	Lch, analog output
5	XTI	I	Clock input	19	AGND2L	-	Analog ground
6	XTO	O	Clock out	20	Vcc2L	-	Analog power supply (+5 V)
7	DGND	-	Digital ground	21	/ZERO	O	Zero data flag
8	VDD	-	Digital power supply (+5 V)	22	/RST	I	Reset
9	Vcc2R	-	Analog power supply (+5 V)	23	/CS/IWO	I	Chip select
10	AGND2R	-	Analog ground	24	MODE	I	Mode control select (H: Software, L: Hardware)
11	EXTR	O	Rch, analog output	25	/MUTE	I	Mute control
12	NC	-		26	MD/DM0	I	Mode control data/De-emphasis select1
13	VOUTR	O	Rch, analog voltage output	27	MC/DM1	I	Mode control BCK/De-emphasis select2
14	AGND1	-	Analog ground	28	ML/IIS	I	Mode control Latch/input format select

IC BLOCK DIAGRAM

- **SN74HC02NSR** (XC724A00)
  Quad 2 Input NOR
  DM: IC 410

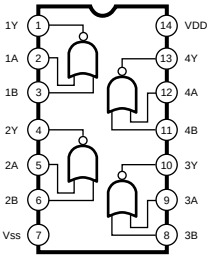

- **SN74HCU04N** (IG142250)
  SN74HCU04NSR (XC723A00)
  Hex Inverter
  JACK: IC 001
  DM: IC 620, 430

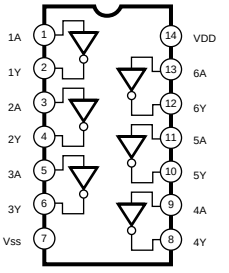

- **SN74HC132NS-R** (XL112A00)
  Quad 2 Input NAND
  DM: IC 030

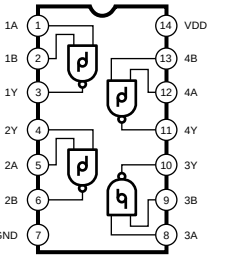

- **TC74HC139AF-TP1** (XE462A00)
  Dual 2 to 4 Demultiplexer
  DM: IC 560

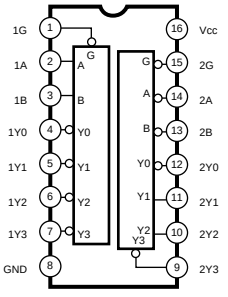

- **SN75C1168N** (XU463A00)
  Line Driver / Receiver
  JACK: IC 003

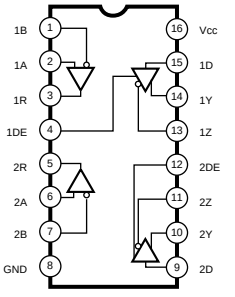

- µ**PC4570HA** (XB247A00)
  Dual Operational Amplifier
  JACK: IC 004, 006

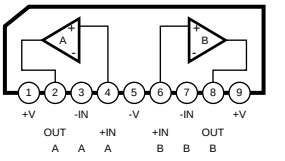

- **LA6517** (XM804A00)
  Dual Low Voltage Power Amplifier
  JACK: IC 005

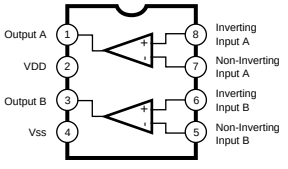

- **M5227P** (XF751A00)
  5-Band Graphic Equalizer
  JACK: IC 007, 008

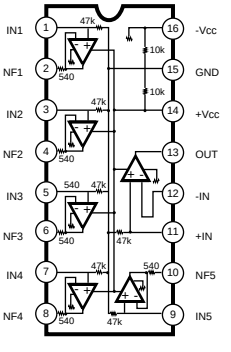

- **BA7725FS-E2** (XT129A00)
  Comparder
  MIC: IC 01

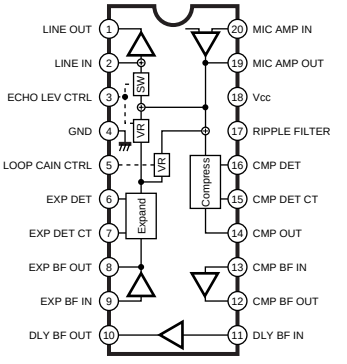

- **BU925F-E2** (XT130A00)
  Digital Delay
  MIC: IC 02

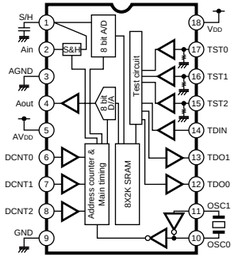

- **TD62381P** (VJ041400)
  Transistor Array
  PN2: IC 200, 300

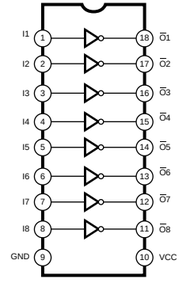

- **TD62785P** (VH885000)
  Transistor Array
  PN2: IC 400

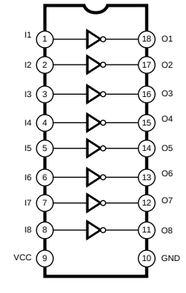

■ CIRCUIT BOARDS

DM Circuit Board (XV572B0) 20
EQ Circuit Board (XU370D0) 25
FU60 Circuit Board (XQ395A0) 20
HP Circuit Board (XT162A0) 20
JACK Circuit Board (XU370D0) 25
MA60 Circuit Board (XQ393E0) 23
MV Circuit Board (XV470B0) 22
NET WORK1 Circuit Board (XT123B0) 21
PEDAL Circuit Board (XR780B0) 21
PL Circuit Board (XL151B0) 21
PN1A Circuit Board (XV470A0) 22
PN1B Circuit Board (XV470A0) 23
PN2 Circuit Board (XV471A0) 24
PN3A Circuit Board (XV470A0) 23
PN3B Circuit Board (XV470A0) 22

● DM Circuit Board

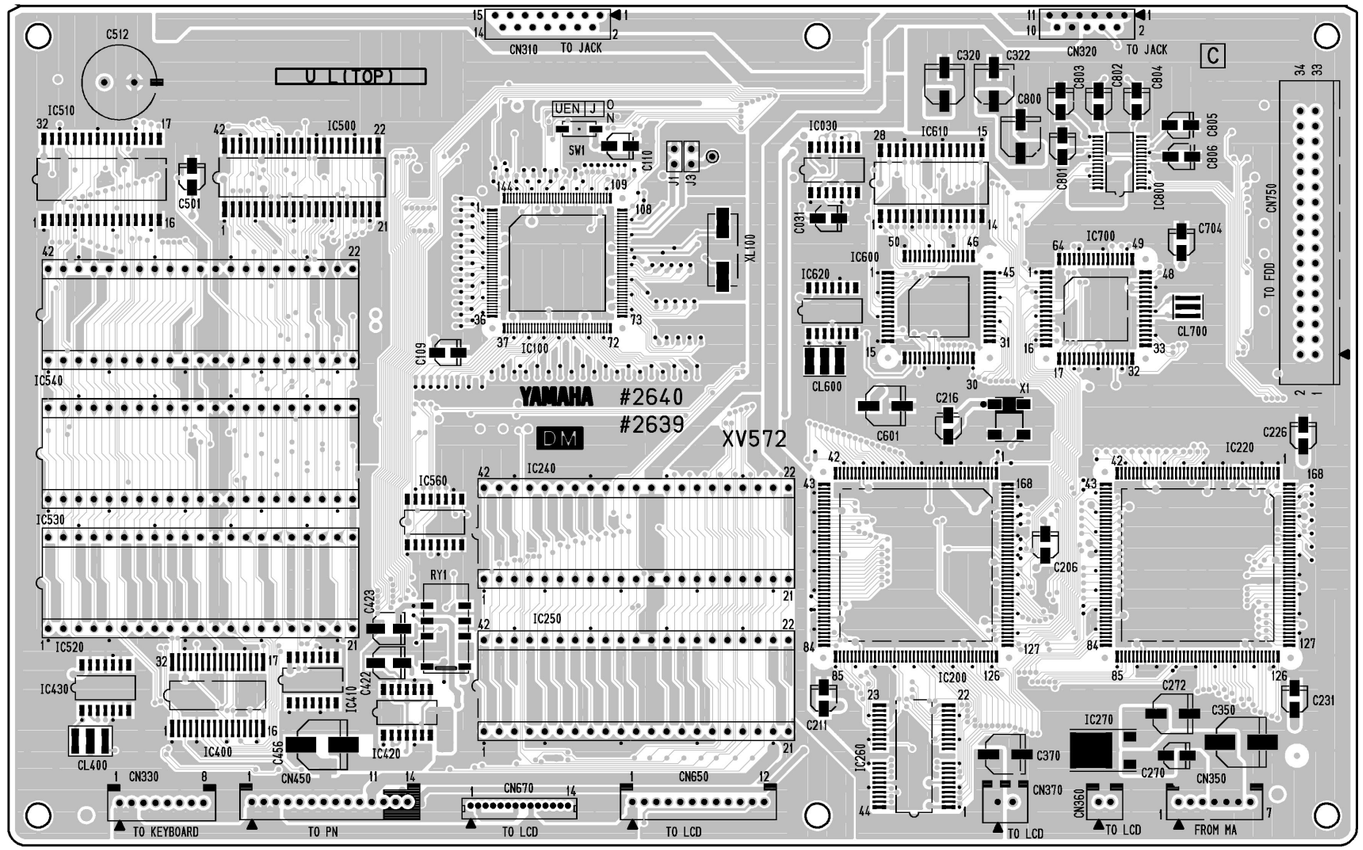

Component side

● FU60 Circuit Board

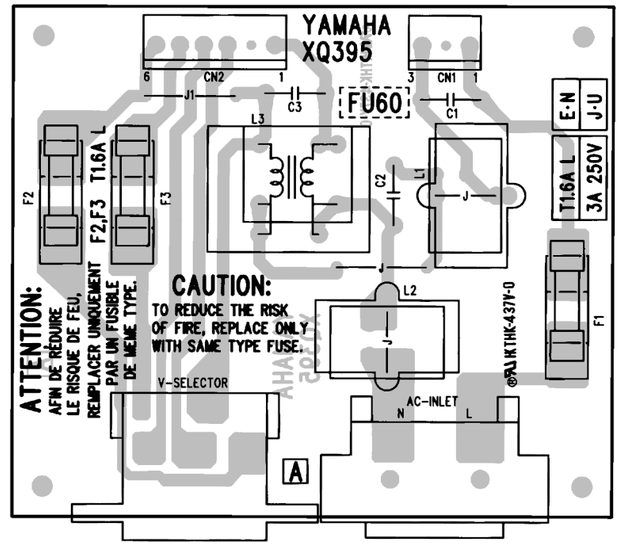

AC Inlet

Component side

● HP Circuit Board

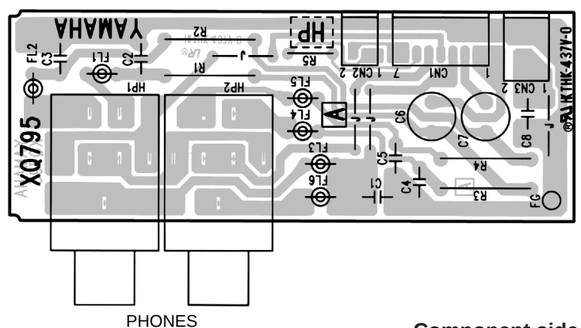

PHONES

Component side

DM: 2NA-V315080⚠
FU60: 2NA-VT15180
HP: 2NA-VT47830

● PN1A Circuit Board

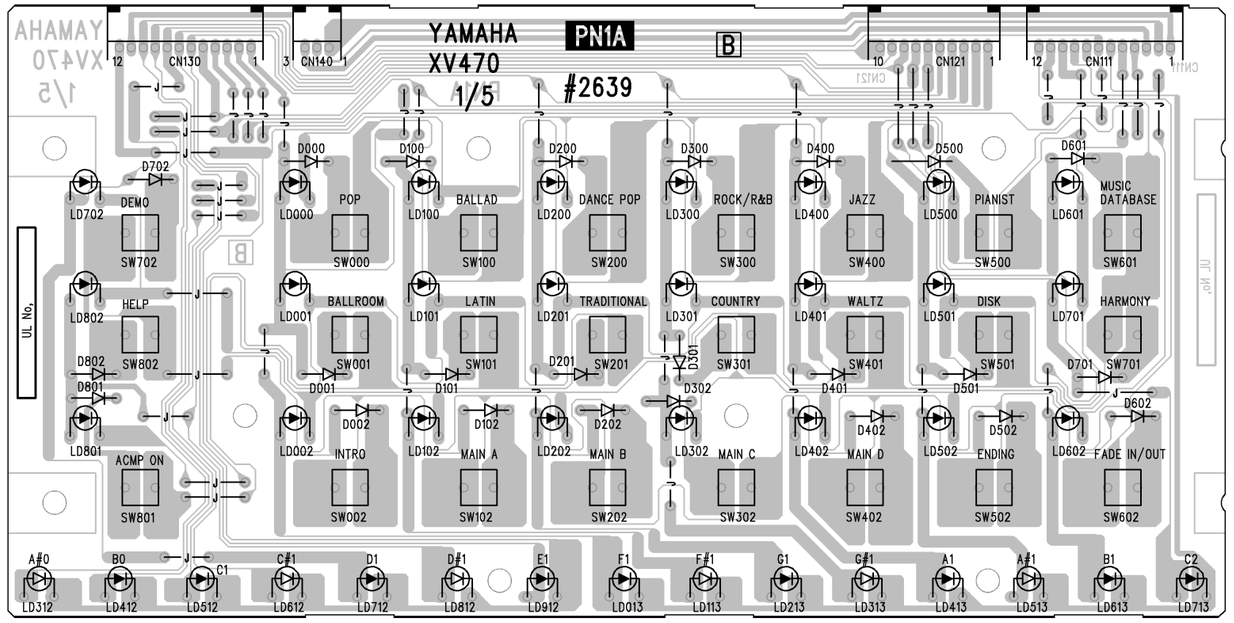

Component side

● PN3B Circuit Board

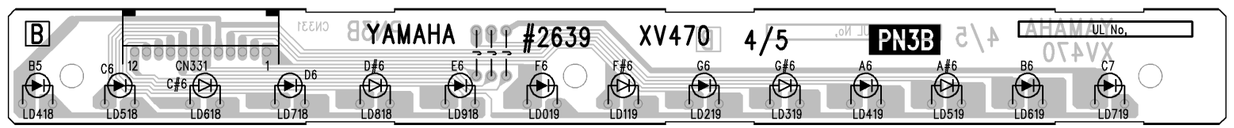

Component side

● MV Circuit Board

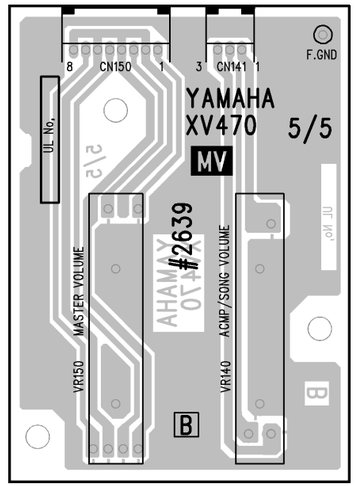

Component side

● DM Circuit Board

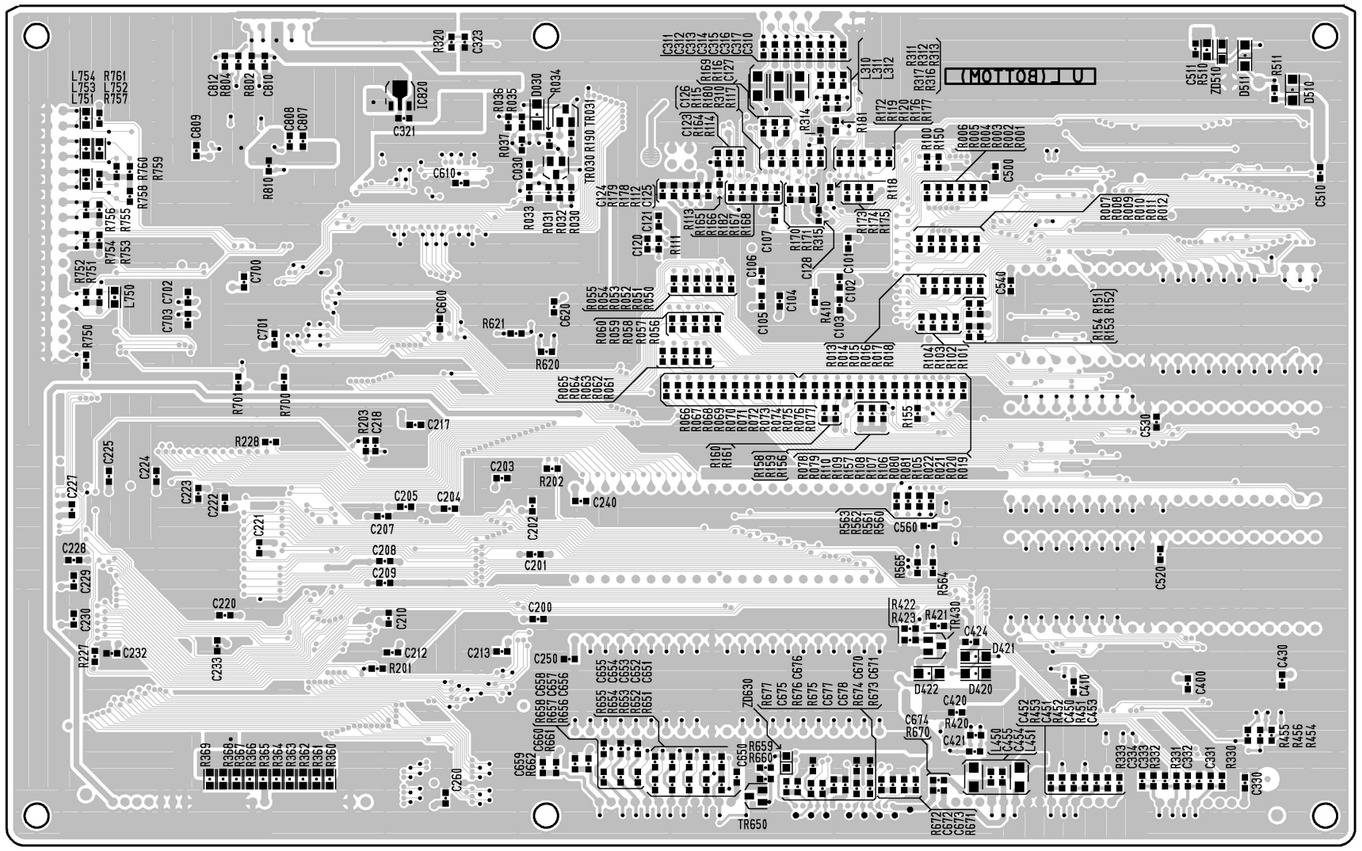

Pattern side

● PEDAL Circuit Board

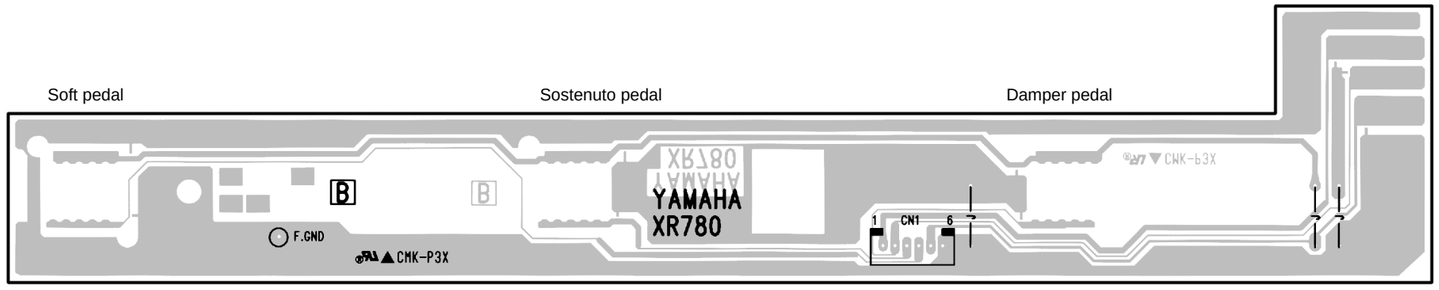

Component side

DM: 2NA-V315080⚠
NET WORK1: 2NA-V325580⚠
PEDAL: 2NA-VU69120⚠
PL: 2NA-VN63740

● NET WORK1 Circuit Board

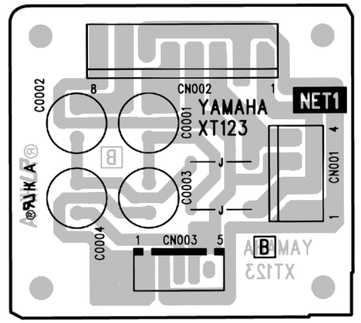

Component side

● PL Circuit Board

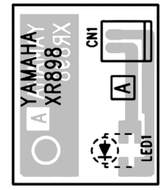

POWER indicator

Component side

● PN3A Circuit Board

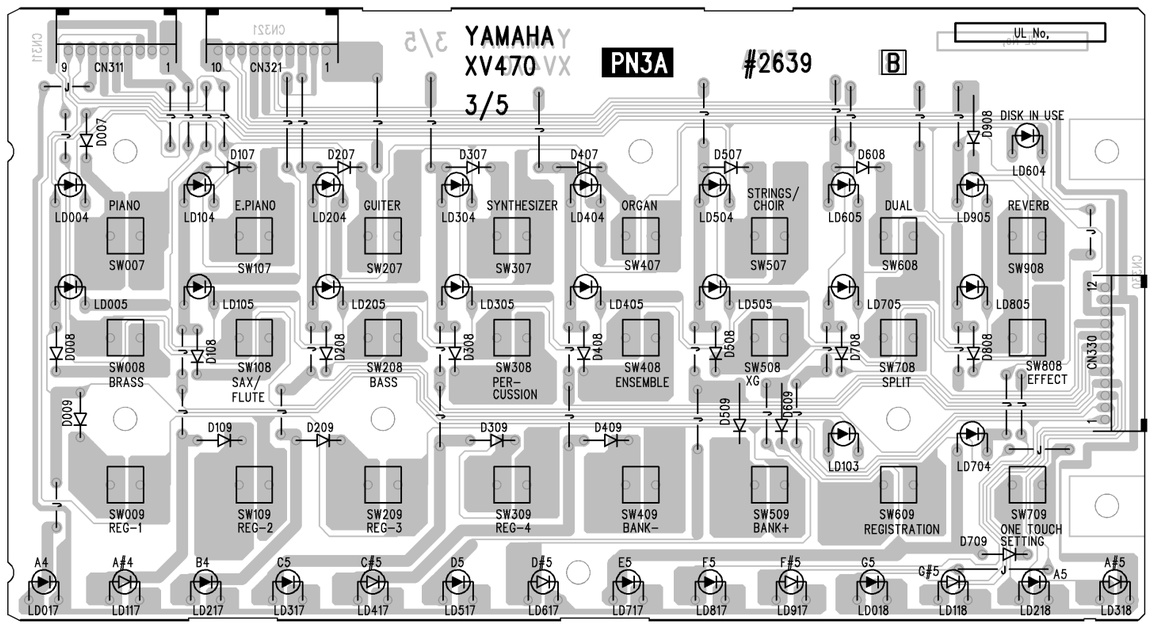

Component side

● PN1B Circuit Board

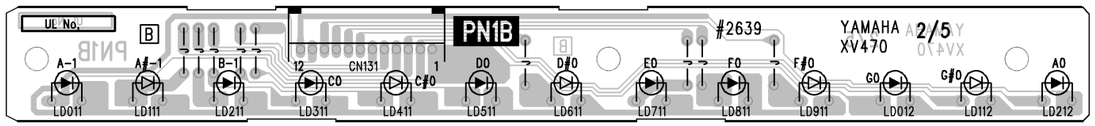

Component side

● MA60 Circuit Board

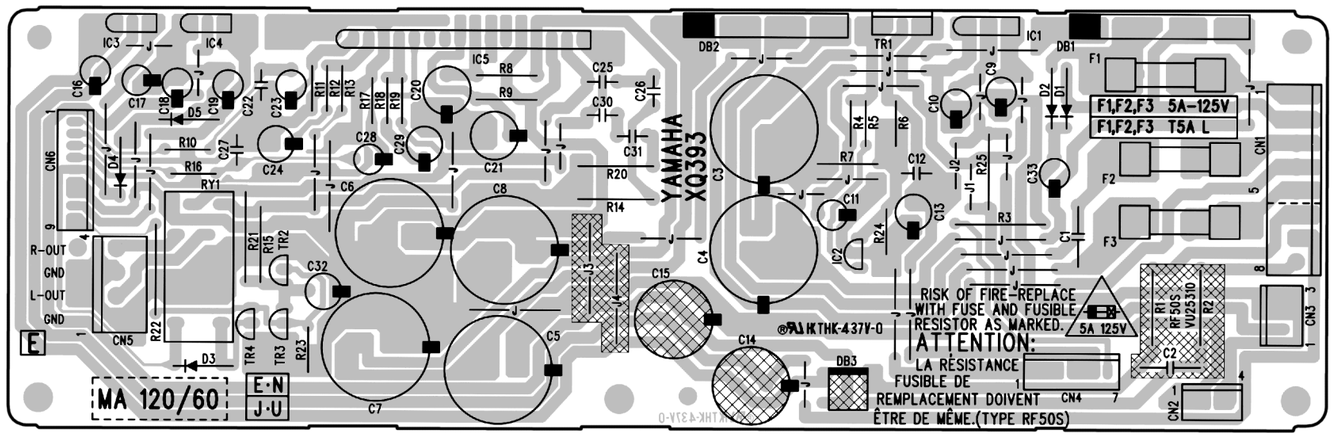

Component side

PN3A, PN1B: 2NA-V314800⚠
MA60: 2NA-VT14410

● PN2 2/2 Circuit Board

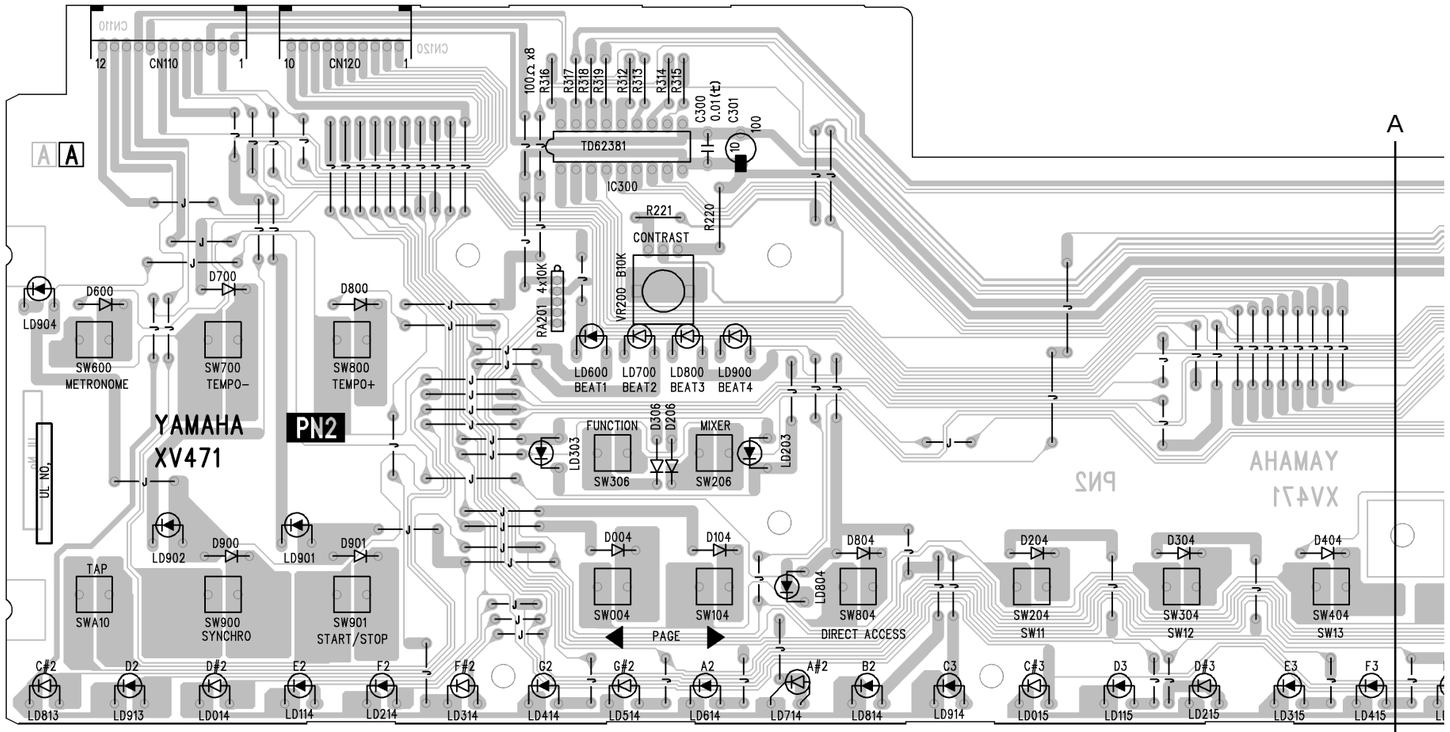

Component side

● PN2 1/2 Circuit Board

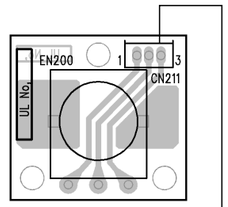

Data Dial

Component side

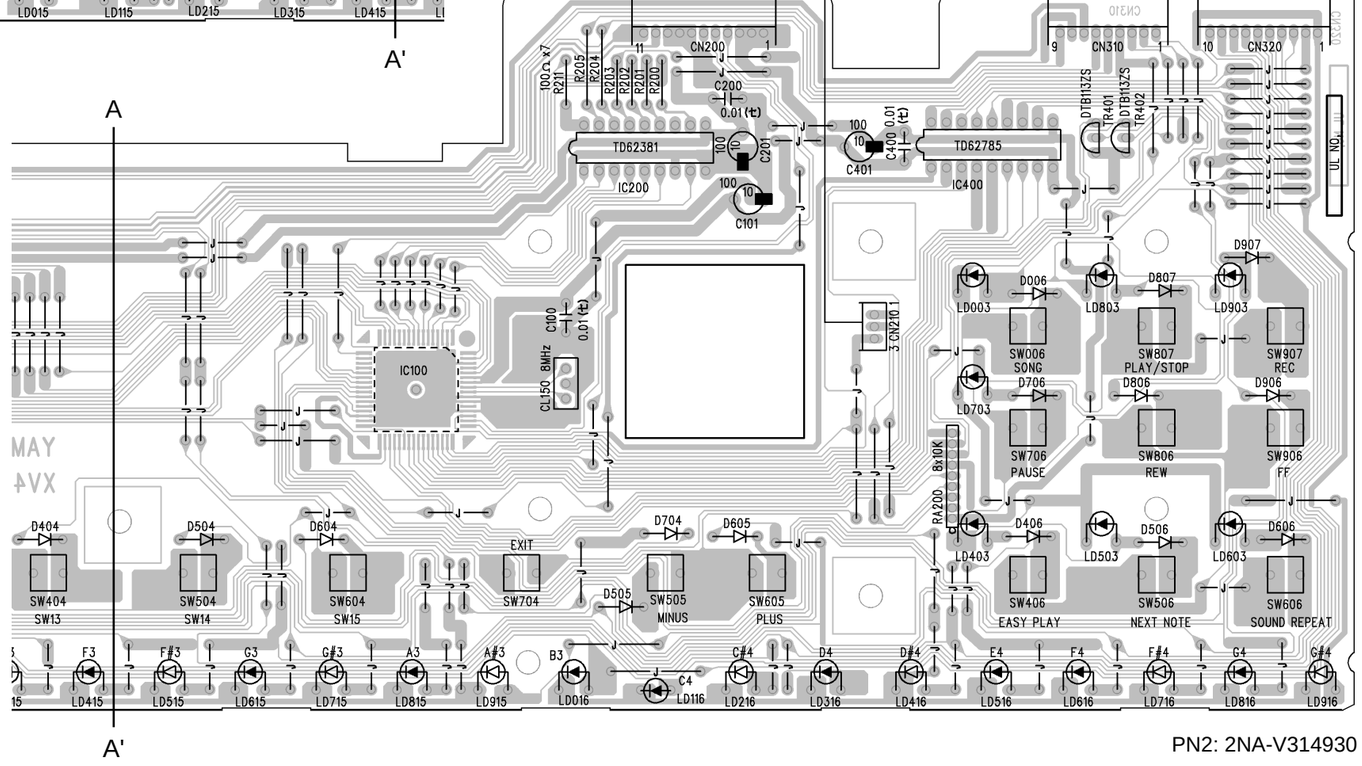

PN2: 2NA-V314930

● JACK Circuit Board

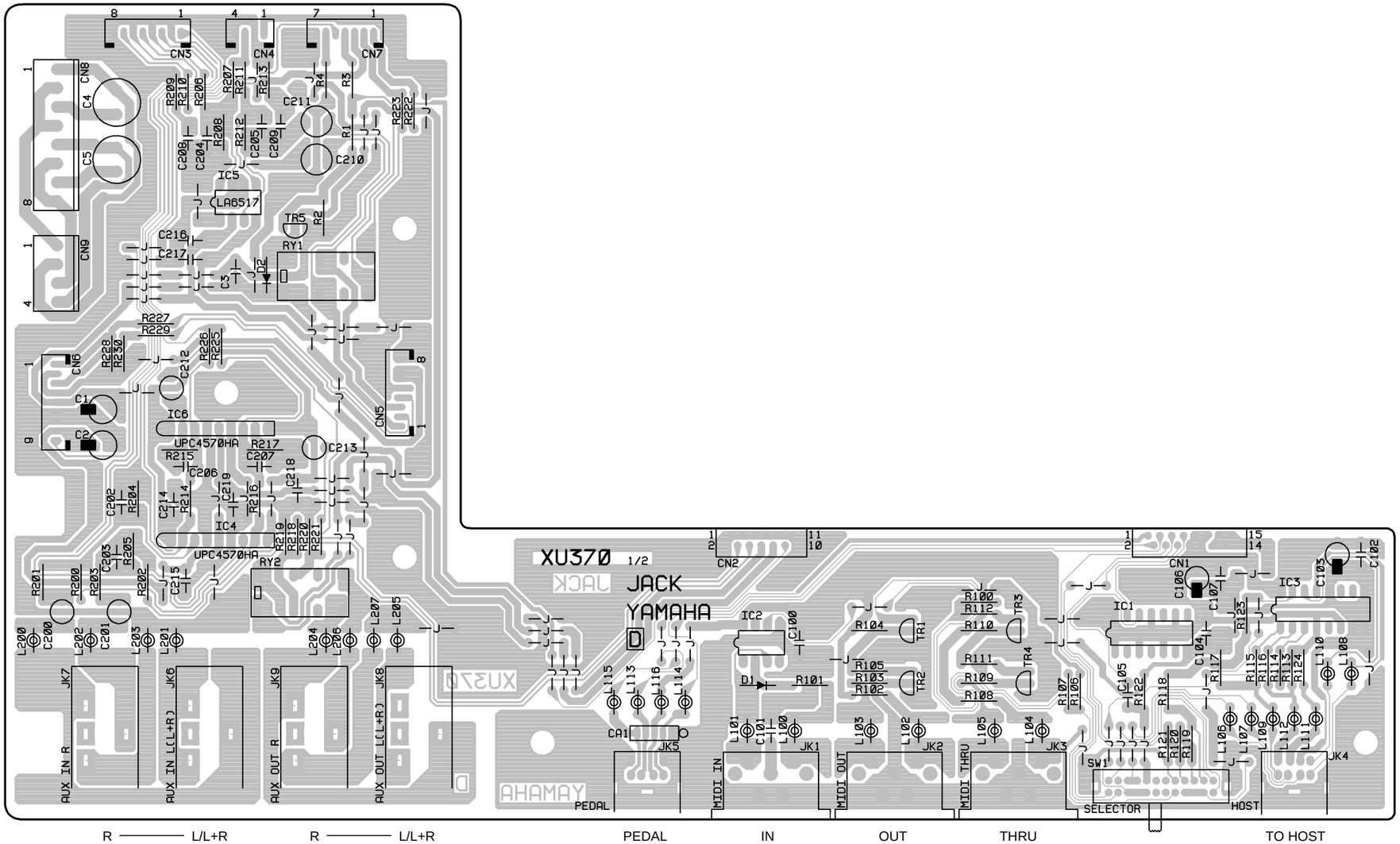

Component side

● EQ Circuit Board

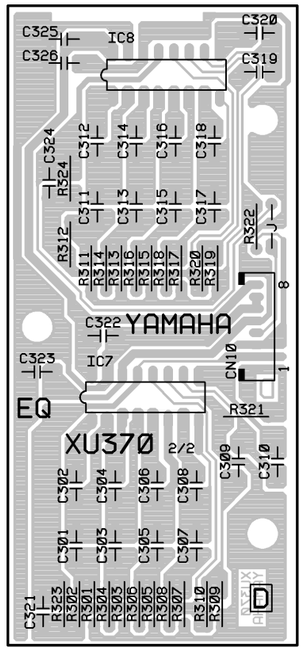

Component side

JACK, EQ: 2NA-V315060

■ TEST PROGRAM

1. Preparation

To check the unit using the test program, the following measuring instruments and jigs will be required: Measuring instruments and jigs:
level meter (IHF-C curve)
frequency counter
notes: Impedance must be 1 MΩ or above.
Use stereo plugs, and connect 33 Ω load at PHONES terminal.
floppy disks (2HD and 2DD)
foot controller (FC-7)
Unit settings:

MASTER VOLUME:	Maximum
Tone:	PIANO
Pedal:	OFF
Reverb:	OFF
Other terminals:	Not connected

2. How to enter the Test Program

While depressing the [C2#], [F2] and [G2#] keys, turn the power switch ON.

3. Proceeding through the Test Program

Once inside the test program, the LCD will display “TEST MODE”.
To select the program number, use [Tempo +/-].
To start the test, press the [Start/Stop] button.
The LCD will display “OK” when the test result is OK.
When the test result is “NG”, turn the power switch off and re-enter the test program.

Test items

No.	LCD for each test	Test Functions and Judgment criteria
1	001: Version	Displays version for ROM (MAIN, WAVE, SCAN, STYLE, PARAM).
2	002: ROM Check1	Checks the Program ROM and Data ROM.
3	003: RAM Check1	Checks all RAMs that are connected to CPU.
4	004: Wave ROM Check1	Checks wave ROM.
7	007: FDD Check	Checks the floppy disk drive unit.
9	009: Effect1 RAM Check	Checks Reverb effect RAM. Check that the C3 note is output and there is no noise.
11	011: TG1 Check	Produces the sine wave sequence by changing the channels (1ch – 32ch) in order from A0 to C6. When a voice switch is pressed, the tone of the voice will sound. After autoscaling is finished, individual keys can be played. (If playing two or more keys simultaneously, the key pressed first has priority to make sound)
12	012: TG2 Check	Produces the sine wave sequence by changing the channels (33ch – 64ch) in order from A0 to C6. When a voice switch is pressed, the tone of the voice will sound. After autoscaling is finished, individual keys can be played. (If playing two or more keys simultaneously, the key pressed first has priority to make sound)
13	013: Pitch Check	Check output level (440 Hz).
14	014: Output R	Check output level (1 kHz). AUX OUT L: Less than -35 dBm (-12 dBm +/-2 dB) AUX OUT R: -7 dBm +/-2 dB When the Rch plug is disconnected, the output level is shown in ( ). PHONES L: Less than -35 dBm, PHONES R: -16 dBm +/-2 dB
15	015: Output L	Check output level (1 kHz). AUX OUT L: -7 dBm +/-2 dB AUX OUT R: Less than -35 dBm PHONES L: -16 dBm +/-2 dB, PHONES R: Less than -35 dBm
16	016: EQ Low	For factory test use only.
17	017: EQ Mid	For factory test use only.
18	018: EQ High	For factory test use only.
19	019: D/A Noise	Check D/A converter noise. Play a note and check that there is no noise during the PIANO 1 release time. (Damper pedal should be ON)
20	020: SW, LED Check	Check switches and LEDs on the panel. Press the switch which is displayed on the LCD. A pre-assigned note is output when the switch is pressed. (With some switches, the corresponding LED will light up). Also check the dial by turning it; the LCD should display OK. The LCD will display the numbers from 50 – 100 when turning the dial clockwise from center and from 50 – 0 when turning the dial counter-clockwise from center.
21	021: All Panel LED On	Check that all panel LEDs are lit.
22	022: All Red Panel LED On	Check that all red panel LEDs are lit.
23	023: All Green Panel LED On	Check that all green panel LEDs are lit.
25	025: All Key LED On	Check that all keyboard guide LEDs are lit.
26	026: All RED Key LED On	Check that all red keyboard LEDs are lit.
27	027: All Green Key LED On	Check that all green keyboard LEDs are lit.
28	028: All LCD Dot On	Check that all LCD dots are ON. The LCD becomes black.
29	029: All LCD Dot Off	Check that all LCD dots are OFF. The LCD becomes white.
31	031: Soft Pedal Check	Check that the C3 note sounds when pushing the pedal and C4 sounds when releasing the pedal, and the LCD should display OK.
32	032: Soste, Pedal Check	Check that the C3 note sounds when pushing the pedal and C4 sounds when releasing the pedal, and the LCD should display OK.
33	033: Damper Pedal Check	Check that the C3 note sounds when pushing the pedal and C4 sounds when releasing the pedal, and the LCD should display OK.
37	037: MIDI Check	After connecting the MIDI IN and MIDI OUT, execute the test. The test result appears on the LCD.
38	038: To Host Check	Connect pin 1 to pin 2, pin 3 to pin 5, and pin 6 to pin 8 on the TO HOST terminal and execute the test. Check that the following notes sound when changing the HOST SELECT switch position according to the LCD indication, and the LCD should display OK: Mac position: note C5, PC1 position: note C4, PC2 position: note C3
41	041: ROM Check2	For factory test use only.
42	042: RAM Check2	For factory test use only.
43	043: Wave ROM Check2	For factory test use only.
45	045: MC Check2	For factory test use only.
46	046: Back up Check2	For factory test use only.
47	047: Factory Set	All RAMs are initialized and re-set to the factory preset data when executing this test.
48	048: Test Mode Exit	Exit from the test program when executing this test.

Note: 0 dBm =0.775 V

CONNECTING CABLES

• Connecting to an Apple Macintoch Series Computer

Apple Macintosh Peripheral cable (M0197). Maximum length 2 meters.
System Peripheral cable - 8 (YAMAHA CCJ-MAC)

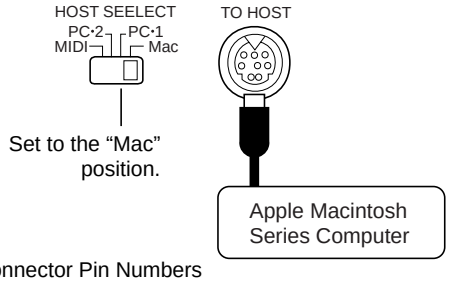

• Connector Pin Numbers



• **“Mac” Cable Connections**

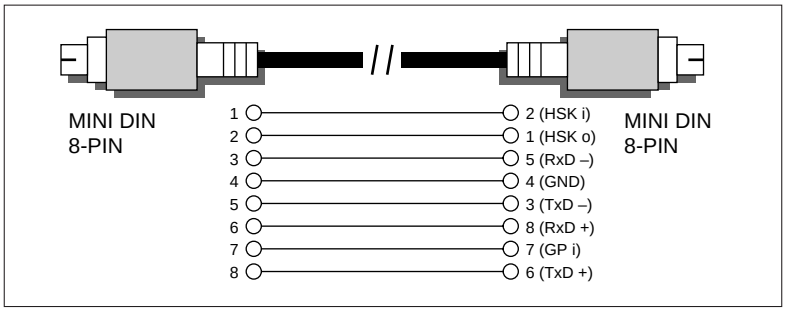

- 8-pin system peripheral cable.
- Data transfer rate: 31,250 bps.

• Connecting to an IBM-PC/AT Series Computer

mini DIN 8-pin → D-SUB 9-pin (YAMAHA CCJ-PC2)

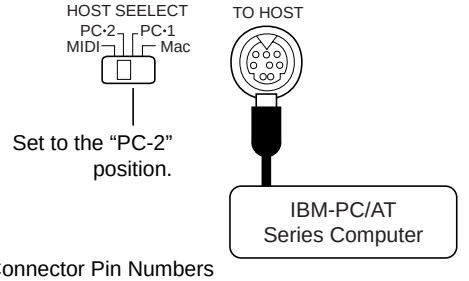

• Connector Pin Numbers

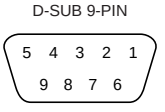

• **“PC2” Cable Connections**

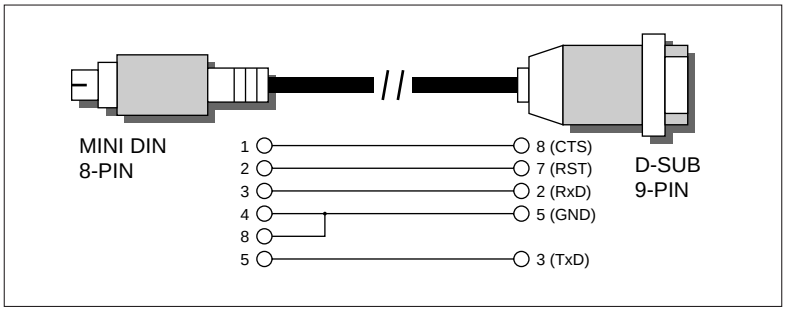

- 8-pin mini DIN → 9-pin D-SUB cable. Use a “PC-1” type cable if your computer uses a 25-pin serial port.
- Data transfer rate: 38,400 bps.

• Connecting to an NEC PC-9801/9821 Series Computer

mini DIN 8-pin → D-SUB 25-pin (YAMAHA CCJ-PC1)

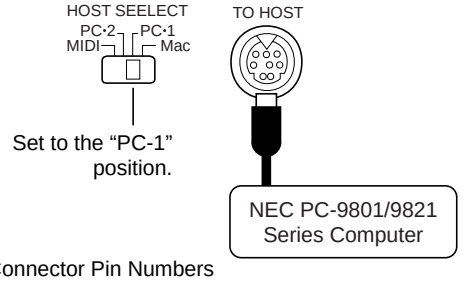

• Connector Pin Numbers

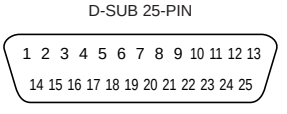

• **“PC2” Cable Connections**

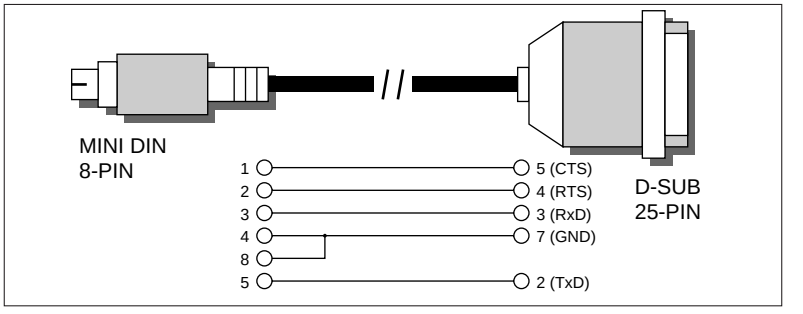

- 8-pin mini DIN → 25-pin D-SUB cable. Use a “PC-2” type cable if your computer uses a 9-pin serial port.
- Data transfer rate: 31,250 bps.

■ MESSAGES

● Common Messages

No disk!

This prompt appears when there is no disk in the disk drive.

⇛ Put the proper disk in the drive and attempt the operation again.

No song!

When renaming the original song or converting the data this prompt will warn you in the event that there is no song data.

⇛ Select a data-containing song, or insert a disk with song data into the floppy disk drive.

No file!

This message appears if there is no Registration Memory, Micro Tuning, or related data on the currently inserted disk when you attempt a file-related operation.

⇛ Create a file or insert a disk with a proper file.

Start disk format?

This message appears when a new disk or a non-Clavinova formatted disk has been inserted into the disk drive.

⇛ Press **OK** if you want to format the disk. Press **CANCEL** if you want to abort the formatting process.

Protected disk!

This message appears when you attempt to record or perform other file operations to a disk whose write-protect tab is set to "write protect."

⇛ Set the write-protect tab to the recordable position then try the operation again. If the operation still cannot be performed, the disk itself has internal write protection, making it impossible to perform recording or file operations on the disk.

Protected song!

This message appears when you attempt to record over parts or perform other operations on files that are incompatible or do not allow such operations. Depending on the file type, operations such as additional recording, copying, deleting, etc. may not be possible on the CVP-103/103M.

Disk read/write error!

An error occurred while writing to (as in recording or storing files) or reading from the disk.

⇛ Try the operation again after pressing the **OK** button. If the error occurs a second time, the disk or the disk drive unit may be faulty. If you suspect the drive to be at fault, refer the problem to your Yamaha dealer.

Completed!

This appears for a few seconds when a time consuming operation such as format, song copy, etc. is finished.

Don't remove the disk!

This message appears when data is being transfered between the Clavinova and the disk.

⇛ The message disappears automatically when the operation is finished.

Are you sure?

When operations such as Song Delete or Format are selected, this prompts you to confirm whether you want to go ahead with the operation or not.

⇛ Press **YES** to execute the operation. Press **NO** to return to the previous display.

Disk full!

The currently loaded disk is full and cannot hold any more data.

⇛ Press the **OK** button, then delete any unnecessary data in the disk, or use a disk that has more available space. If this appears during song recording, recording will stop and recorded data up to that point will be saved automatically.

Too many files!

A 2DD and a 2HD disk can hold up to 60 song files each. A 2DD disk can hold about 110 files (of various types), and a 2HD disk can hold up to about 220 files.

This message appears when you try to produce more files than the disk is capable of storing.

⇛ Press the **OK** button, then delete any unnecessary files in the disk, or use a disk that has more available space.

Same name! Overwrite?

A file with the same name exists.

⇛ Press the **OK** button if you wish to overwrite the original file with new data, or press **CANCEL** to abort the operation.

This button can't be used during recording or playback!

This message appears when you try to perform operations which cannot be done during recording or playback, such as data conversion, etc.

⇛ Stop song recording or playback, or exit from the recording/playback mode, then perform the operation again.

This button can't be used during playback!

This appears when you try to execute operations that cannot be performed during playback, such as changing the number of repeats of the Guide function.

⇛ Stop song playback, or exit from the playback mode, then perform the operation again.

Button not valid!

A button that does not have a function in the current mode has been pressed.

Disk read/write operation in process!

This message appears when you try to execute other operations while reading data from the disk or saving data.

⇛ Wait until the data read/write operation is completed, then perform the operation again.

Memory write operation in process!

This message appears when you attempt to execute another operation while writing edited data of a song recorded to internal RAM.

⇛ Complete the data write operation, then perform the other operation.

Delete CVP MEMORY?

This message appears when executing an operation that results in deleting data recorded to the internal RAM, such as playback of disk software.

⇛ Press **YES** to delete the data recorded to the internal RAM, then perform the desired operation. Press the NO button if you want to keep the data.

Convert to CVP song?

This message appears when you attempt to record over or edit data of commercially available software or data recorded on Clavinovas other than the CVP-103/103M/105/107/109.

⇛ Press **YES** to convert the data for recording/editing on the CVP-103/103M/105/107/109. Press **NO** if you don't want to convert the data.

● Song Copy Related Messages

Number of disk exchanges:

This message informs you of the number of times the disks must be exchanged when copying a song to a different disk before starting the song copy operation.

Insert disk 2 (destination disk). (##/##)

Insert the destination disk to be copied.

Select destination song number.

When copying a song from the source disk to another disk, this message prompts you to specify the song number in the destination disk to which the song is to be copied, when the disk is first inserted.

Insert disk 1 (source disk). (##/##)

This message prompts you to insert the source disk when copying songs to a second disk.

Select a different song number!

This appears when the same song number is selected for both source and destination in the song copy operation.

⇛ Change the destination song number.

● Custom Style Related Messages

CUSTOM STYLE Select a source style.

This message appears for a few seconds when the Custom Style mode is engaged.

Clear style?

This confirmation prompt appears when you attempt to change the beat parameter in the Custom Style mode.

Clear section?

This confirmation prompt appears when you attempt to change the number of measures in the Custom Style mode.

Clear part?

This confirmation prompt appears when you attempt to perform operations which can only be done after deleting the part of the original style in the Custom Style mode.

Store ############?

This confirmation prompt appears when you attempt a store operation in the Custom Style mode.
This also appears when you attempt to change styles before storing.

This confirmation prompt appears when you attempt to exit from the Custom Style mode before storing data.

⇛ Select **YES** to store. Press **NO** to exit without storing data. Press **CANCEL** to return to the previous display without storing data.

Can't recall!

This message appears when the Recall Section operation in the Custom Style mode cannot be performed, due to changes in the time signature (beat).

Store in memory before saving to disk.

If the data has not been stored to memory before saving to disk in the Custom Style mode, this message prompts you to store the data before proceeding.

Not enough memory! Delete an unneeded style or simplify the current style.

This message appears if there is not enough internal memory space left when storing data in the Custom Style mode.

Select style to delete.

This message appears when DELETE is selected from the display shown above.

⇛ Select the style to be deleted and press the **OK** button. Press **CANCEL** if you do not want to delete the style.

Not enough memory!

This message appears when memory capacity has become full during recording in the Custom Style mode. This also appears when memory has become full during recording of a song to internal RAM. In this case, recording will stop and data recorded up to that point will be saved automatically.

● Recorded Data Conversion Related Messages

2HD disk not valid! Copy to 2DD disk.

This message appears if a 2HD disk is used when performing conversion of the recorded data.

⇛ Press **OK** and copy the song data to be converted to a 2DD disk, then perform the data conversion using the disk.

Completed! Song No.##

Following conversion of the song data, this message displays the song number to which the data was saved.

● Initial Data Change Related Messages

Write edited data?

This confirmation message appears if you attempt to exit the Initial Edit function without writing the data.

⇛ Press **YES** to write the changed data. Press **NO** to exit without writing. Press **CANCEL** to return to the Initial Edit display without writing.

● Chord Sequence Related Messages

Save recorded data?

This confirmation message appears if you attempt to exit the Chord Sequence function during recording.

⇛ Press **YES** to store the recorded data. Press **NO** to exit without storing. Press **CANCEL** to return to the Chord Sequence display without storing.

Button not valid! Enter at top of measure.

This message appears during Chord Sequence recording when you attempt to enter an accompaniment style or section change at a position other than the beginning of a measure.

⇛ Record changes of accompaniment style or section only at the beginning of the measure.

● Style File Load Related Messages

Not enough memory! Delete an unneeded style?

This message appears when you attempt to load a Style file without there being enough memory to hold the specified file.

Too much data for LISTEN function! Load data.

Some Style Files are too large to be handled by the LISTEN feature in the Style File Load function.

● Other Messages

Host is offline!

This message appears when the host computer is not turned on, the connecting cable is not properly connected, the HOST SELECT switch is not in the proper position, or the MIDI driver or MIDI application is not active. In this case, turn the power off on both the Clavinova and the computer, and check the cable connection and the position of the HOST SELECT switch. Once the connection and HOST SELECT switch position is verified, turn the power of the computer on first, then the Clavinova, to check if the MIDI driver and MIDI application function properly.

Back up data erased and replaced by factory data.

As long as the Clavinova is regularly used, data is retained in memory. If the instrument is left unused for a week or longer before being turned on again, the data is erased and this message appears. This message also appears when you recall all factory data.

Hardware error!

A problem has been detected in the hardware system during power on.

⇛ Refer the problem to your Yamaha dealer.

Clean the disk drive!

The disk head is dirty. Clean the disk head using a commercially available head cleaning disk.

YAMAHA [Clavinova] Date :01-MAR-1999
Model CVP-103/103M MIDI Implementation Chart Version : 1.0

Function...		Transmitted	Recognized	Remarks
Basic Channel	Default	1 - 16	1 - 16	Memorized
	Changed	1 - 16 *1	1 - 16 *2	
Mode	Default	3	3	
	Messages	x	3, 4 (m=1) *3	
	Altered	**********	x	
Note Number	: True voice	0 - 127 **********	0 - 127 0 - 127	
Velocity	Note ON	o 9nH,v=1-127	o 9nH,v=1-127	
	Note OFF	x 9nH,v=0	x	
After Touch	Key's	x	x	
	Ch's	x	o	
Pitch Bend		o	o 0-24 semi	
Control Change	0,32	o	o	Bank Select
	1	x *4	o	Modulation
	5	x	o	Portament Time
	7,10,11	o	o	
	6,38	o	o	Data Entry
	64,66,67	o	o	
	65	x	o	Portament
	71-74	x *4	o	Sound Controller
	84	o	o	Portamento Cntrl
	91,93,94	o	o	Effect Depth
	96,97	x	o	RPN Inc,Dec
	98,99	x *4	o	NRPN LSB,MSB
	100,101	o	o	RPN LSB,MSB
Prog Change	: True #	o 0 - 127 **********	o 0 - 127	
System Exclusive		o	o	
Common	: Song Pos.	x	x	
	: Song Sel.	x	x	
	: Tune	x	x	
System Real Time	: Clock	o	o	
	: Commands	o	o	
Aux Mes-sages	: All Sound Off	x	o(120,126,127)	
	: Reset All Cntrls	x	o(121)	
	: Local ON/OFF	x	x	
	: All Notes OFF	x	o(123-125)	
	: Active Sense	o	o	
	: Reset	x	x	

Notes: *1 ?
*2 ?
*3 m is always treated as "1" regardless of its value.
*4 Transmitted when "ACMP&RHY"or"HARMONY" MIDI send sw is on.

Mode 1 : OMNI ON , POLY Mode 2 : OMNI ON ,MONO o : Yes
Mode 3 : OMNI OFF, POLY Mode 4 : OMNI OFF,MONO x : No

MIDI DATA FORMAT

Many MIDI messages listed in the MIDI Data Format are expressed in decimal numbers, binary numbers and hexadecimal numbers. Hexadecimal numbers may include the letter “H” as a suffix. Also, “n” can freely be defined as any whole number.
To enter data/values, refer to the table below.

Decimal	Hexadecimal	Binary
0	00	0000 0000
1	01	0000 0001
2	02	0000 0010
3	03	0000 0011
4	04	0000 0100
5	05	0000 0101
6	06	0000 0110
7	07	0000 0111
8	08	0000 1000
9	09	0000 1001
10	0A	0000 1010
11	0B	0000 1011
12	0C	0000 1100
13	0D	0000 1101
14	0E	0000 1110
15	0F	0000 1111
16	10	0001 0000
17	11	0001 0001
18	12	0001 0010
19	13	0001 0011
20	14	0001 0100
21	15	0001 0101
22	16	0001 0110
23	17	0001 0111
24	18	0001 1000
25	19	0001 1001
26	1A	0001 1010
27	1B	0001 1011
28	1C	0001 1100
29	1D	0001 1101
30	1E	0001 1110
31	1F	0001 1111
32	20	0010 0000
33	21	0010 0001
34	22	0010 0010
35	23	0010 0011
36	24	0010 0100
37	25	0010 0101
38	26	0010 0110
39	27	0010 0111
40	28	0010 1000
41	29	0010 1001
42	2A	0010 1010
43	2B	0010 1011
44	2C	0010 1100
45	2D	0010 1101
46	2E	0010 1110
47	2F	0010 1111
48	30	0011 0000
49	31	0011 0001
50	32	0011 0010
51	33	0011 0011
52	34	0011 0100
53	35	0011 0101
54	36	0011 0110
55	37	0011 0111
56	38	0011 1000
57	39	0011 1001
58	3A	0011 1010
59	3B	0011 1011
60	3C	0011 1100
61	3D	0011 1101
62	3E	0011 1110
63	3F	0011 1111

Decimal	Hexadecimal	Binary
64	40	0100 0000
65	41	0100 0001
66	42	0100 0010
67	43	0100 0011
68	44	0100 0100
69	45	0100 0101
70	46	0100 0110
71	47	0100 0111
72	48	0100 1000
73	49	0100 1001
74	4A	0100 1010
75	4B	0100 1011
76	4C	0100 1100
77	4D	0100 1101
78	4E	0100 1110
79	4F	0100 1111
80	50	0101 0000
81	51	0101 0001
82	52	0101 0010
83	53	0101 0011
84	54	0101 0100
85	55	0101 0101
86	56	0101 0110
87	57	0101 0111
88	58	0101 1000
89	59	0101 1001
90	5A	0101 1010
91	5B	0101 1011
92	5C	0101 1100
93	5D	0101 1101
94	5E	0101 1110
95	5F	0101 1111
96	60	0110 0000
97	61	0110 0001
98	62	0110 0010
99	63	0110 0011
100	64	0110 0100
101	65	0110 0101
102	66	0110 0110
103	67	0110 0111
104	68	0110 1000
105	69	0110 1001
106	6A	0110 1010
107	6B	0110 1011
108	6C	0110 1100
109	6D	0110 1101
110	6E	0110 1110
111	6F	0110 1111
112	70	0111 0000
113	71	0111 0001
114	72	0111 0010
115	73	0111 0011
116	74	0111 0100
117	75	0111 0101
118	76	0111 0110
119	77	0111 0111
120	78	0111 1000
121	79	0111 1001
122	7A	0111 1010
123	7B	0111 1011
124	7C	0111 1100
125	7D	0111 1101
126	7E	0111 1110
127	7F	0111 1111

- Except the table above, for example 144-159(decimal)/9nH/1001 0000-1001 1111(binary) displays the Note On Message for each channel (1-16). 176-191/BnH/1011 0000-1011 1111 displays the Control Change Message for each channel (1-16). 192-207/CnH/1100 0000-1100 1111 displays the Program Change Message for each channel (1-16). 240/F0H/1111 0000 denotes the start of a System Exclusive Message. 247/F7H/1111 0111 denotes the end of a System Exclusive Message.
- aaH (hexidecimal)/0aaaaaaa (binary) denotes the data address. The address contains High, Mid, and Low.
- bbH/0bbbbbbb denotes the byte count.
- ccH/0ccccccc denotes the check sum.
- ddH/0ddddddd denotes the data/value.

1. TRANSMIT FLOW

```
MIDI ◄── KEY OFF                  8nH
OUT     KEY ON/OFF                9nH

        CONTROL CHANGE            BnH
        BANK SELECT MSB           BnH,00H
          BANK SELECT LSB         BnH,20H
          DATA ENTRY MSB          BnH,06H
          DATA ENTRY LSB          BnH,26H
          MAIN VOLUME             BnH,07H
          PANPOT                  BnH,0AH
          EXPRESSION              BnH,0BH
          SUSTAIN                 BnH,40H
          SOSTENUTE               BnH,42H
          SOFT PEDAL              BnH,43H
          PORTAMENTO CONTROL      BnH,54H
          REVERB SEND LEVEL       BnH,5BH
          CHORUS SEND LEVEL       BnH,5DH
          VARIATION SEND LEVEL    BnH,5EH
          RPN LSB                 BnH,64H
          RPN MSB                 BnH,65H
          PITCH BEND SENS.        BnH,65H,00H,64H,00H,06H,mmH

        PROGRAM CHANGE            CnH

        SYSTEM EXCLUSIVE MESSAGE
          <YAMAHA MIDI FORMAT>
          <UNIVERSAL>
        UNIVERSAL NON-REALTIME    F0H 7EH.....F7H
          <XG STANDARD>
        XG PARAMETER CHANGE       F0H 43H 1nH 4CH aaH aaH aaH ddH
                                                        .....ddH F7H
        XG BULK DUMP              F0H 43H 0nH 4CH bbH bbH aaH aaH
                                              aaH ddH.....ddH ccH F7H
          <CLAVINOVA MIDI COMPLIANCE>
          <SPECIAL OPERATORS>

        SYSTEM REALTIME MESSAGE
          MIDI CLOCK              F8H
          START                   FAH
          STOP                    FCH
          ACTIVE SENSING          FEH
```

2. RECEIVE FLOW

```
MIDI ◄── KEY OFF                  8nH
IN

        KEY ON/OFF                9nH

        CONTROL CHANGE
          BANK SELECT MSB         BnH,00H
          BANK SELECT LSB         BnH,20H
          MODULATION              BnH,01H
          PORTAMENTO TIME         BnH,05H
          DATA ENTRY MSB          BnH,06H
          DATA ENTRY LSB          BnH,26H
          MAIN VOLUME             BnH,07H
          PANPOT                  BnH,0AH
          EXPRESSION              BnH,0BH
          SUSTAIN                 BnH,40H
          PORTAMENTO              BnH,41H
          SOSTENUTO               BnH,42H
          SOFT PEDAL              BnH,43H
          HARMONIC CONTENT        BnH,47H
          RELEASE TIME            BnH,48H
          ATTACK TIME             BnH,49H
          BRIGHTNESS              BnH,4AH
          PORTAMENTO CONTROL      BnH,54H
          REVERB SEND LEVEL       BnH,5BH
          CHORUS SEND LEVEL       BnH,5DH
          VARIATION SEND LEVEL    BnH,5EH
          DATA INCREMENT          BnH,60H
          DATA DECREMENT          BnH,61H
          NRPN LSB                BnH,62H
          NRPN MSB                BnH,63H
            VIBRATO RATE          BnH,63H,01H,62H,08H,06H,mmH
            VIBRATO DEPTH         BnH,63H,01H,62H,09H,06H,mmH
            VIBRATO DELAY         BnH,63H,01H,62H,0AH,06H,mmH
            FILTER CUTOFF FREQ.   BnH,63H,01H,62H,20H,06H,mmH
            FILTER RESONANCE      BnH,63H,01H,62H,21H,06H,mmH
            EG ATTACK TIME        BnH,63H,01H,62H,63H,06H,mmH
            EG DECAY TIME         BnH,63H,01H,62H,64H,06H,mmH
            EG RELEASE            BnH,63H,01H,62H,66H,06H,mmH
            DRUM INST                                        *1
              CUTOFF FREQ.        BnH,63H,14H,62H,rrH,06H,mmH
              FILTER RESONANCE    BnH,63H,15H,62H,rrH,06H,mmH
              EG ATTACK RATE      BnH,63H,16H,62H,rrH,06H,mmH
              EG DECAY RATE       BnH,63H,17H,62H,rrH,06H,mmH
              PITCH COARSE        BnH,63H,18H,62H,rrH,06H,mmH
              PITCH FINE          BnH,63H,19H,62H,rrH,06H,mmH
              LEVEL               BnH,63H,1AH,62H,rrH,06H,mmH
              PANPOT              BnH,63H,1CH,62H,rrH,06H,mmH
              REVERB SEND         BnH,63H,1DH,62H,rrH,06H,mmH
```

```
      CHORUS SEND          BnH,63H,1EH,62H,rrH,06H,mmH
      VARIATION SEND       BnH,63H,1FH,62H,rrH,06H,mmH
    RPN LSB                BnH,64H
    RPN MSB                BnH,65H
      PITCH BEND SENS.     BnH,65H,00H,64H,00H,06H,mmH
      FINE TUNING          BnH,65H,00H,64H,01H,06H,mmH,
                                                  26H,llH
      COARSE TUNING        BnH,65H,00H,64H,02H,06H,mmH
      NULL                 BnH,65H,7FH,64H,7FH
    ALL SOUND OFF          BnH,78H,00H
    RESET ALL CONTROLLERS  BnH,79H,00H
    ALL NOTES OFF          BnH,7BH,00H
    OMNI OFF               BnH,7CH,00H
    OMNI ON                BnH,7DH,00H
    MONO                   BnH,7EH
    POLY                   BnH,7FH

- PROGRAM CHANGE           CnH

- CHANNEL AFTER TOUCH      DnH

- PITCH BEND CHANGE        EnH

- SYSTEM EXCLUSIVE MESSAGE
    <YAMAHA MIDI FORMAT>
    <UNIVERSAL>
- UNIVERSAL REALTIME       F0H 7FH.....F7H
- UNIVERSAL NON-REALTIME   F0H 7EH.....F7H
    <XG STANDARD>          F0H 43H 1nH 4CH aaH aaH aaH ddH
- XG PARAMETER CHANGE                          .....ddH F7H
                           F0H 43H 0nH 4CH bbH bbH aaH aaH
- XG BULK DUMP                    aaH ddH.....ddH ccH F7H
                           F0H 43H 3nH 4CH aaH aaH aaH F7H
- PARAMETER REQUEST        F0H 43H 2nH 4CH aaH aaH aaH F7H
- DUMP REQUEST
    <CLAVINOVA MIDI COMPLIANCE>
    <SPETIAL OPERATORS>
    <Others>

- SYSTEM REALTIME MESSAGE
    MIDI CLOCK             F8H
    START                  FAH
    STOP                   FCH
    ACTIVE SENSING         FEH
```

3. TRANSMIT/RECEIVE DATA

3-1 CHANNEL VOICE MESSAGES

3-1-1 KEY OFF

```
STATUS          1000nnnn(8nH)   n = 0 - 15 VOICE CHANNEL NUMBER
NOTE NUMBER     0kkkkkkk        k = 0 (C-2) - 127 (G8)
VELOCITY        0vvvvvvv        v: ignored
```

3-1-2 KEY ON/OFF

```
STATUS          1001nnnn(9nH)   n = 0 - 15 VOICE CHANNEL NUMBER
NOTE NUMBER     0kkkkkkk        k = 0 (C-2) - 127 (G8)
VELOCITY        0vvvvvvv        (v ≠ 0) NOTE ON
                00000000        (v = 0) NOTE OFF
```

3-1-3 PROGRAM CHANGE

```
STATUS          1100nnnn(CnH)   n = 0 - 15 VOICE CHANNEL NUMBER
PROGRAM NUMBER  0ppppppp        p = 0 - 127
```

*** PROGRAM NUMBER: XG DRUM VOICE number correspondence**

```
P = 0    Standard Kit
P = 1    Standard2 Kit
P = 8    Room Kit
P = 16   Rock Kit
P = 24   Electro Kit
P = 25   Analog Kit
P = 27   Dance Kit
P = 32   Jazz Kit
P = 40   Brush Kit
P = 48   Classic Kit
```

*** PROGRAM NUMBER: XG SFX KIT number correspondence**

```
P = 0    SFX1 Kit
P = 1    SFX2 Kit
```

When DRUM VOICE is selected and program change data for a different DRUM VOICE is received, the currently selected DRUM VOICE will be replaced with the new DRUM VOICE.

3-1-4 CHANNEL AFTER TOUCH (Receive only)

```
STATUS          1101nnnn(DnH)   n = 0 - 15 VOICE CHANNEL NUMBER
VALUE           0vvvvvvv        v = 0 - 127 AFTER TOUCH VALUE
```

3-1-5 PITCH BEND CHANGE

```
STATUS          1110nnnn(EnH)   n = 0 - 15 VOICE CHANNEL NUMBER
LSB             0vvvvvvv        PITCH BEND CHANGE LSB
MSB             0vvvvvvv        PITCH BEND CHANGE MSB
```

3-1-6 CONTROL CHANGE

```
STATUS1011nnnn(BnH)             n = 0 - 15 VOICE CHANNEL NUMBER
CONTROL NUMBER      0ccccccc
CONTROL VALUE       0vvvvvvv
```

*** Transmit CONTROL NUMBER.**

```
c = 0     BANK SELECT MSB      ; v = 0:XG NORMAL,
                                     64:SFX NORMAL,
                                     126:XG SFX KIT,
                                     127:XG DRUM
c = 32    BANK SELECT LSB      ; v = 0 - 127
c =  6    DATA ENTRY MSB       ; v = 0 - 127                 *1
c = 38    DATA ENTRY LSB       ; v = 0 - 127                 *1
c =  7    MAIN VOLUME          ; v = 0 - 127
c = 10    PANPOT               ; v = 0 - 127
c = 11    EXPRESSION           ; v = 0 - 127
c = 64    SUSTAIN              ; v = 0-63:OFF , 64-127:ON    *2
c = 66    SOSTENUTO            ; v = 0-63:OFF , 64-127:ON    *2
c = 67    SOFT PEDAL           ; v = 0-63:OFF , 64-127:ON    *2
c = 84    PORTAMENTO CONTROL   ; v = 0 - 127
c = 91    REVERB SEND LEVEL    ; v = 0 - 127
c = 93    CHORUS SEND LEVEL    ; v = 0 - 127
c = 94    VARIATION SEND LEVEL ; v = 0 - 127
                                 (When only Connection = 1[System])
c = 100   RPN LSB              ; v = 0 - 127
c = 101   RPN MSB              ; v = 0 - 127
```

*** Receive CONTROL NUMBER.**

```
c =  0    BANK SELECT MSB      ; v = 0:XG NORMAL,
                                     64:SFX NORMAL,
                                     126:XG SFX KIT,
                                     127:XG DRUM
c = 32    BANK SELECT LSB      ; v = 0 - 127
c =  1    MODULATION           ; v = 0 - 127                 *2
c =  5    PORTAMENTO TIME      ; v = 0 - 127                 *2
c =  6    DATA ENTRY MSB       ; v = 0 - 127                 *1
c = 38    DATA ENTRY LSB       ; v = 0 - 127                 *1
c =  7    MAIN VOLUME          ; v = 0 - 127
c = 10    PANPOT               ; v = 0 - 127
c = 11    EXPRESSION           ; v = 0 - 127
c = 64    SUSTAIN              ; v = 0-63:OFF , 64-127:ON    *2
c = 65    PORTAMENTO           ; v = 0-63:OFF , 64-127:ON    *2
c = 66    SOSTENUTO            ; v = 0-63:OFF , 64-127:ON    *2
c = 67    SOFT PEDAL           ; v = 0-63:OFF , 64-127:ON    *2
c = 71    HARMONIC CONTENT     ; v = 0:-64 - 64:0 - 127:+63  *2
c = 72    RELEASE TIME         ; v = 0:-64 - 64:0 - 127:+63  *2
c = 73    ATTACK TIME          ; v = 0:-64 - 64:0 - 127:+63  *2
c = 74    BRIGHTNESS           ; v = 0:-64 - 64:0 - 127:+63  *2
c = 84    PORTAMENT CONTROL    ; v = 0 - 127                 *2
c = 91    REVERB SEND LEVEL    ; v = 0 - 127
c = 93    CHORUS SEND LEVEL    ; v = 0 - 127
c = 94    VARIATION SEND LEVEL ; v = 0 - 127
                                 (When only Connection = 1[System])
c = 96    DATA INCREMENT       ; v = 0 - 127                 *1
c = 97    DATA DECREMENT       ; v = 0 - 127                 *1
          RPN MSB/LSB, NRPN MSB/LSB
```

*1 Only when setting the appointed parameter with RPN, NRPN.
*2 Does not effect Rhythm Voice.

- Until a PROGRAM CHANGE message is received, the BANK SELECT operation will be suspended. When a Voice, including VOICE BANK, is changed, set the BANK SELECT and Program Change Message, and transmit in the following order, BANK SELECT MSB, LSB, PROGRAM CHANGE.

- MODULATION controls the Vibrato Depth.

- PORTAMENTO TIME controls the Pitch Change Speed when the Portamento Switch = ON. 0 being the shortest time, and 127 being the longest.

- PANPOT changes the value for the melody voice and rhythm voice in relation to the preset value.

- Portamento time is fixed to 0 when the PORTAMENTO CONTROL is used.

- HARMONIC CONTENT applies adjustment to the resonance value that is set by the voice. This parameter specifies relative change with the value of 64 producing 0 adjustment. As values get higher the sound becomes increasingly eccentric. Note that for some voices the effective parameter range is narrower than the legal parameter range.

- RELEASE TIME applies adjustment to the envelope release time set by the voice. This parameter specifies relative change with the value of 64 producing 0 adjustment.

- ATTACK TIME applies adjustment to the envelope attack time set by the voice. This parameter specifies relative change with the value of 64 producing 0 adjustment.

- BRIGHTNESS applies adjustment to the cut-off frequency set by the voice. This parameter specifies relative change with the value of 64 producing 0 adjustment. Lower voices produce a softer sound. For some voices the effective parameter range is narrower than the legal parameter range.

3-2 CHANNEL MODE MESSAGES

```
STATUS          1011nnnn(BnH)   n = 0 - 15 VOICE CHANNEL NUMBER
CONTROL NUMBER  0ccccccc        c = CONTROL NUMBER
CONTROL VALUE   0vvvvvvv        v = DATA VALUE
```

3-2-1 ALL SOUND OFF (Receive only)
(CONTROL NUMBER = 78H , DATA VALUE = 0)

Switches off all sound from the channel. Does not reset Note On and Hold On conditions established by Channel Messages.

3-2-2 RESET ALL CONTROLLERS (Receive only)
(CONTROL NUMBER = 79H , DATA VALUE = 0)

Resets controllers as follows.

```
PITCH BEND CHANGE    0 (Center)
AFTER TOUCH          0 (min.)
MODULATION           0 (min.)
EXPRESSION           127 (max.)
SUSTAIN              0 (off)
SOSTENUTO            0 (off)
SOFT PEDAL           0 (off)
NRPN                 Sets number to null. (Internal data remains unchanged)
RPN                  Sets number to null. (Internal data remains unchanged)
PORTAMENT CONTROL    Resets portamento source note number
PORTAMENTO           0 (off)
```

3-2-3 ALL NOTES OFF (Receive only)
(CONTROL NUMBER = 7BH , DATA VALUE = 0)

Switches off all of the channel's "on" notes. However, any notes being held by SUSTAIN or SOSTENUTO continue to sound until SUSTAIN/SOSTENUTO goes off.

3-2-4 OMNI OFF (Receive only)
(CONTROL NUMBER = 7CH , DATA VALUE = 0)

Same processing as for All Notes Off.

3-2-5 OMNI ON (Receive only)
(CONTROL NUMBER = 7DH , DATA VALUE = 0)

Same processing as for All Notes Off. Omni On is not executed.

3-2-6 MONO (Receive only)
(CONTROL NUMBER = 7EH , DATA VALUE = 0)

Same processing as for All Notes Off. If the 3rd byte is in a range of 0-16 the corresponding channel will be changed to Mode 4 (m=1).

3-2-7 POLY (Receive only)
(CONTROL NUMBER = 7FH , DATA VALUE = 0)

Same processing as for All Sounds Off and the corresponding channel will be changed to Mode 3.

3-3 REGISTERED PARAMETER NUMBER(RPN)

```
STATUS          1011nnnn(BnH)  n = 0 - 15 VOICE CHANNEL NUMBER
RPN LSB         01100100(64H)
RPN LSB NUMBER  0ppppppp       p = RPN LSB (refer to the list below)
RPN MSB         01100101(65H)
RPN MSB NUMBER  0qqqqqqq       q = RPN MSB (refer to the list below)
DATA ENTRY MSB  00000110(06H)
DATA VALUE      0mmmmmmm       m = Data Value
DATA ENTRY LSB  00100110(26H)
DATA VALUE      0lllllll       l = Data Value
```

First appoints the parameter for RPN MSB/LSB, then sets the parameter value for data entry MSB/LSB.

```
RPN     D.ENTRY
LSB MSB MSB LSB PARAMETER  NAME          DATA RANGE
00H 00H mmH -   PITCH BEND SENSITIVITY  00H-18H (0 - 24 semitones)
01H 00H mmH llH FINE TUNE       {mmH,llH} = {00H,00H}-{40H,00H}-{7FH,7FH}
                                  (-8192*100/8192) - 0 - (+8192*100/8192)
02H 00H mmH -   COARSE TUNE      28H - 40H - 58H (-24 - 0 - +24 semitones)
7FH 7FH -   -   NULL
```

Clears the current RPN number setting. Does not change the internal parameter settings.

3-4 NON-REGISTERED PARAMETER NUMBER(NRPN) (Receive only)

```
STATUS          1011nnnn(BnH)  n = 0 - 15 VOICE CHANNEL NUMBER
NRPN LSB        01100010(62H)
NRPN LSB NUMBER 0ppppppp       p = NRPN LSB (refer to the list below)
NRPN MSB        01100011(63H)
NRPN MSB NUMBER 0qqqqqqq       q = NRPN MSB (refer to the list below)
DATA ENTRY MSB  00000110(06H)
DATA VALUE      0mmmmmmm       m = Data Value
```

First appoints the parameter for NRPN MSB/LSB, then sets the parameter value for data entry MSB/LSB.

```
NRPN    D.ENTRY
MSB LSB MSB LSB PARAMETER NAME        DATA RANGE
01H 08H mmH —   VIBRATO RATE         00H - 40H - 7FH (-64 - 0 - +63)
01H 09H mmH —   VIBRATO DEPTH        00H - 40H - 7FH (-64 - 0 - +63)
01H 0AH mmH —   VIBRATO DELAY        00H - 40H - 7FH (-64 - 0 - +63)
01H 20H mmH —   FILTER CUTOFF FREQUENCY 00H - 40H - 7FH (-64 - 0 - +63)
01H 21H mmH —   FILTER RESONANCE     00H - 40H - 7FH (-64 - 0 - +63)
01H 63H mmH —   EG ATTACK TIME       00H - 40H - 7FH (-64 - 0 - +63)
01H 64H mmH —   EG DECAY TIME        00H - 40H - 7FH (-64 - 0 - +63)
01H 66H mmH —   EG RELEASE           00H - 40H - 7FH (-64 - 0 - +63)
14H rrH mmH —   DRUM FILTER CUTOFF FREQ. 00H - 40H - 7FH (-64 - 0 - +63)
15H rrH mmH —   DRUM FILTER RESONANCE 00H - 40H - 7FH (-64 - 0 - +63)
16H rrH mmH —   DRUM AEG ATTACK RATE  00H - 40H - 7FH (-64 - 0 - +63)
17H rrH mmH —   DRUM AEG DECAY RATE   00H - 40H - 7FH (-64 - 0 - +63)
18H rrH mmH —   DRUM PITCH COARSE     00H - 40H - 7FH (-64 - 0 - +63)
19H rrH mmH —   DRUM PITCH FINE       00H - 40H - 7FH (-64 - 0 - +63)
1AH rrH mmH —   DRUM LEVEL            00H - 7FH (0 - max.)
1CH rrH mmH —   DRUM PANPOT           00H   ,01H  - 40H   - 7FH
                                      (random,left - center - right)
1DH rrH mmH —   DRUM REVERB SEND LEVEL  00H - 7FH (0 - max.)
1EH rrH mmH —   DRUM CHORUS SEND LEVEL  00H - 7FH (0 - max.)
1FH rrH mmH —   DRUM VARIATION SEND LEVEL 00H - 7FH (0 - max.)
```

The MSB 14H-1FH (for drums) message is received when multi-part parameters PART MODE = DRUMS1...2.
rrH : drum instrument note number

3-5 SYSTEM REALTIME MESSAGES

3-5-1 MIDI CLOCK

```
STATUS      11111000 (F8H)
```

Transmission: 96 clocks per measure are transmitted.
Reception: If the instrument's clock is set to external, after FAH is received from the external device the instrument's clock will sync with the 96 beats per measure received from the external device.
Decides whether the internal clock, or Timing Clocks received via the MIDI IN will be used.

3-5-2 START

```
STATUS      11111010 (FAH)
```

Transmission: Transmitted when instrument's Rhythm or Song playback is started.
Reception: Depending upon the condition, Rhythm, Song Playback, or Song Rec will start.

3-5-3 STOP

```
STATUS      11111100 (FCH)
```

Transmission: Transmitted when instrument's Rhythm or Song playback is stopped.
Reception: Depending upon the condition, Rhythm, Song Playback, or Song Rec will stop.

3-5-4 ACTIVE SENSING

```
STATUS      11111110 (FEH)
```

Transmission: Transmitted approximately once every 200msec.
Reception: Sensing is started once this Code is received. If Status or Data is not received within 400ms, the MIDI Receive Buffer will be cleared, and all notes, including those being sustained, will be cut OFF. Also, all control values will be reset to their factory defaults.

3-6 SYSTEM EXCLUSIVE MESSAGE

3-6-1 YAMAHA MIDI FORMAT

3-6-1-1 SECTION CONTROL

binary	hexadecimal	
11110000	F0	Exclusive status
01000011	43	YAMAHA ID
01111110	7E	Style
00000000	00	
0sssssss	SS	Switch No.
		00H : INTRO A
		01H : INTRO B
		02H : INTRO C/D
		03H~07H : INTRO C/D
		08H : MAIN A
		09H : MAIN B
		0AH : MAIN C
		0BH~0FH : MAIN D
		10H : FILL IN A
		11H : FILL IN B
		12H : FILL IN C
		13H~17H : FILL IN D
		18H : BREAK FILL
		19H : BREAK FILL
		1AH : BREAK FILL
		1BH~1FH : BREAK FILL
		20H : ENDING A
		21H : ENDING B
		22H : ENDING C/D
		23H~27H : ENDING C/D
0ddddddd	DD	Switch On/Off: 00H(Off),7FH(On)
11110111	F7	End of Exclusive

When an ON code is received, the appointed section will be changed.

3-6-1-2 TEMPO CONTROL

binary	hexadecimal	
11110000	F0	Exclusive status
01000011	43	YAMAHA ID
01111110	7E	Style
00000000	01	
0ttttttt	TT	Tempo4
0ttttttt	TT	Tempo3
0ttttttt	TT	Tempo2
0ttttttt	TT	Tempo1
11110111	F7	End of Exclusive

The internal clock will be set to the received Tempo value.
Tempo Meta Event is a large data block (24-bit), it is divided into 4 groups with 7-bits going into each of the Tempos 1-4 (4 receives the remaining 3 bits).

3-6-1-3 CHORD CONTROL type1

binary	hexadecimal	
11110000	F0	Exclusive status
01000011	43	YAMAHA ID
01111110	7E	Style
00000010	02	type 1
0ddddddd	dd	chord root(cr)
0ddddddd	dd	chord type(ct)
0ddddddd	dd	bass note(bn)
0ddddddd	dd	bass type(bt)
11111110	F7	End of Exclusive

Chord transmit: Transmitted using type 1 format.

cr Chord Root 0kkknnnn (kkk:Change symbol, nnnn:Note)

Binary	Hex	Change symbol	Binary	Hex	Note
0000nnnn	0n	bbb(3 flats)	0kkk0000	k0	reserved
0001nnnn	1n	bb (2 flats)	0kkk0001	k1	C
0010nnnn	2n	b (1 flat)	0kkk0010	k2	D
0011nnnn	3n	natural	0kkk0011	k3	E
0100nnnn	4n	# (1 sharp)	0kkk0100	k4	F
0101nnnn	5n	## (2 sharps)	0kkk0101	k5	G
0110nnnn	6n	###(3 sharps)	0kkk0110	k6	A
			0kkk0111	k7	B

ct Chord Type 0 - 34,127

Binary	Hex	Dec	Chord type	Binary	Hex	Dec	Chord type
00000000	00	0	Maj	00010010	12	18	dim7
00000001	01	1	Maj6	00010011	13	19	7th
00000010	02	2	Maj7	00010100	14	20	7sus4
00000011	03	3	Maj7(#11)	00010101	15	21	7b5
00000100	04	4	Maj(9)	00010110	16	22	7(9)
00000101	05	5	Maj7(9)	00010111	17	23	7(#11)
00000110	06	6	Maj6(9)	00011000	18	24	7(13)
00000111	07	7	aug	00011001	19	25	7(b9)
00001000	08	8	min	00011010	1A	26	7(b13)
00001001	09	9	min6	00011011	1B	27	7(#9)
00001010	0A	10	min7	00011100	1C	28	Maj7aug
00001011	0B	11	min7b5	00011101	1D	29	7aug
00001100	0C	12	min(9)	00011110	1E	30	1+8
00001101	0D	13	min7(9)	00011111	1F	31	1+5
00001110	0E	14	min7(11)	00100000	20	32	sus4
00001111	0F	15	minMaj7	00100001	21	33	1+2+5
00010000	10	16	minMaj7(9)	00100010	22	34	cc
00010001	11	17	dim				

bn	On Bass Note	Same as Chord root, 127:No bass chord
bt	Bass Chord	Same as Chord type 127:No bass chord

3-6-2 UNIVERSAL SYSTEM EXCLUSIVE

3-6-2-1 UNIVERSAL REALTIME MESSAGE

3-6-2-1-1 MIDI MASTER VOLUME (Receive only)

binary	hexadecimal	
11110000	F0	Exclusive status
01111110	7F	Universal Realtime
01111111	7F	ID of target Device
00001001	04	Sub-ID #1=Device Control Message
00000001	01	Sub-ID #2=Master Volume
0sssssss	SS	Volume LSB
0ttttttt	TT	Volume MSB
11110111	F7	End of Exclusive
or		
11110000	F0	Exclusive status
01111110	7F	Universal Realtime
0xxxnnnn	XN	When N is received N=0-F, whichever is received. When N is transmitted N always=0. X = don't care
00001001	04	Sub-ID #1=Device Control Message
00000001	01	Sub-ID #2=Master Volume
0sssssss	SS	Volume LSB
0ttttttt	TT	Volume MSB
11110111	F7	End of Exclusive

The volume for all channels will be changed simultaneously.
The TT value is used as the MIDI Master Volume value. (the SS value is ignored.)

3-6-2-2 UNIVERSAL NON REALTIME MESSAGE

3-6-2-2-1 GENERAL MIDI SYSTEM ON

binary	hexadecimal	
11110000	F0	Exclusive status
01111110	7E	Universal Non-Realtime
01111111	7F	ID of target Device
00001001	09	Sub-ID #1=General MIDI Message
00000001	01	Sub-ID #2=General MIDI On
11110111	F7	End of Exclusive
or		
11110000	F0	Exclusive status
01111110	7E	Universal Non-Realtime
0xxxnnnn	XN	When N is received N=0-F, whichever is received. When N is transmitted N always=0. X = don't care
00001001	09	Sub-ID #1=General MIDI Message
00000001	01	Sub-ID #2=General MIDI On
11110111	F7	End of Exclusive

Depending upon the received ON message, the System Mode will be changed to XG.
Except MIDI Master Tuning, all control data be reset to default values.
This message requires approximately 50ms to execute, so sufficient time should be allowed before the next message is sent.

After the GM System ON message is received, message reception of the following will be limited.

- Bank Select MSB-LSB in channel 10 will be ignored and the drum voice will be fixed.
- Bank Select MSB-LSB except in channel 10 will be ignored except 127/0.
- NRPN is not received.

When XG SYSTEM ON is received, these restrictions will be cancelled.

3-6-3 XG STANDARD

3-6-3-1 XG PARAMETER CHANGE

3-6-3-1-1 XG SYSTEM ON

binary	hexadecimal	
11110000	F0	Exclusive status
01000011	43	YAMAHA ID
0001nnnn	1N	Device Number
01001100	4C	Model ID
00000000	00	Address High
00000000	00	Address Mid
01111110	7E	Address Low
00000000	00	Data
11110111	F7	End of Exclusive

Depending upon the received ON message, the SYSTEM MODE will be changed to XG.Controllers will be reset, all values of Multi Part and Effect, and All System values denoted by “XG” data within All System will be reset to default values in the table.
This message requires approximately 50ms to execute, so sufficient time should be allowed before the next message is sent.

3-6-3-1-2 XG PARMETER CHANGE

binary	hexadecimal	
11110000	F0	Exclusive status
01000011	43	YAMAHA ID
0001nnnn	1N	Device Number
01001100	4C	Model ID
0aaaaaaa	AA	Address High
0aaaaaaa	AA	Address Mid
0aaaaaaa	AA	Address Low
0ddddddd	DD	Data
|	|	
11110111	F7	End of Exclusive

For parameters with data size of 2 or 4, transmit the appropriate number of data bytes.
For more information on Address and Parameters, refer to < Table 1-2 > and < Table 1-4 > ~ < Table 1-6 >.

The following Parameter Changes are handled.

XG System Data
Multi Effect 1 Data
Multi Part Data
Drums Setup Data

3-6-3-2 XG BULK DUMP

binary	hexadecimal	
11110000	F0	Exclusive status
01000011	43	YAMAHA ID
0000nnnn	0N	Device Number
01001100	4C	Model ID
0bbbbbbb	BB	ByteCount
0bbbbbbb	BB	ByteCount
0aaaaaaa	AA	Address High
0aaaaaaa	AA	Address Mid
0aaaaaaa	AA	Address Low
0ddddddd	DD	Data
|	|	
0ccccccc	CC	Check sum
11110111	F7	End of Exclusive

For more information on Address and Byte Count, refer to < Table 1-2 > ~ < Table 1-6 >.
The Check Sum value is set such that the sum of Byte Count, Address, Data, and Check Sum has value zero in its seven least significant bits.
If the top of the block is appointed to the Address the XG Bulk Dump, Bulk Request will be received.
The Block is a unit that consists of the data, arranged in the list, as the Total Size.

The following Bulk Dumps are handled.

XG System Data
Multi Effect 1 Data(Individual effect unit)
Multi Part Data(Individual part unit)
Drums Setup Data(Individual note unit)
System Information(Transmit only)

3-6-3-3 XG PARAMETER REQUEST (Receive only)

binary	hexadecimal	
11110000	F0	Exclusive status
01000011	43	YAMAHA ID
0011nnnn	3n	Device Number
01001100	4C	Model ID
0aaaaaaa	AA	Address High
0aaaaaaa	AA	Address Mid
0aaaaaaa	AA	Address Low
11110111	F7	End of Exclusive

For more information on Address and Byte Count refer to < Table 1-2 > and < Table 1-4 > ~ < Table 1-6 > .

The following Parameter Requests are handled.

XG System Data
Multi Effect 1 Data
Multi Part Data
Drums Setup Data

3-6-3-4 XG DUMP REQUEST (Receive only)

binary	hexadecimal	
11110000	F0	Exclusive status
01000011	43	YAMAHA ID
0010nnnn	2n	Device Number
01001100	4C	Model ID
0aaaaaaa	AA	Address High
0aaaaaaa	AA	Address Mid
0aaaaaaa	AA	Address Low
11110111	F7	End of Exclusive

For more information on Address and Byte Count refer to < Table 1-2 > ~ < Table 1-6 >.

The following Dump Requests are handled.

XG System Data
Multi Effect 1 Data(Individual module unit)
Multi Part Data(Individual part unit)
Drums Setup Data(Individual note unit)
System Information

3-6-4 CLAVINOVA MIDI COMPLIANCE

3-6-4-1 INTERNAL CLOCK / EXTERNAL CLOCK (Receive only)

binary	hexadecimal	
11110000	F0	Exclusive status
01000011	43	YAMAHA ID
01110011	73	Clavinova ID
00000001	01	Clavinova common ID
0000001n	0N	N: 2(Internal Clock),3(External Clock)
11110111	F7	End of Exclusive

3-6-4-2 DOC MULTI TIMBRE ON / OFF (Receive only)

binary	hexadecimal	
11110000	F0	Exclusive status
01000011	43	YAMAHA ID
01110011	73	Clavinova ID
00000001	01	Clavinova commmon ID
00000110	1N	N:3(DOC Multi Timbre Off),4(DOC Multi Timbre On)
11110111	F7	End of Exclusive

3-6-4-3 PANEL LED ON / OFF (Receive only)

binary	hexadecimal	
11110000	F0	Exclusive status
01000011	43	YAMAHA ID
01110011	73	Clavinova ID
00000001	01	Clavinova commmon ID
00011010	1A	PANEL LED On/Off
0mmmmmmm	MM	MM:00H(LED Off),01H(LED On),02H(The LED flashes) 03H (LED All off), 04H (Panel LED returns to normal operation)
00000000	00	
0nnnnnnn	NN	LED No.
11110111	F7	End of Exclusive

Remotely switches the Panel LED On/Off.

3-6-4-4 PANEL VOICE SETTING (Receive only)

binary	hexadecimal	
11110000	F0	Exclusive status
01000011	43	YAMAHA ID
01110011	73	Clavinova ID
01000101	01	Clavinova common ID
00100010	22	Piano Live Exclusive Substatus
00000000	00	Panel Voice Setting Substatus
0000nnnn	0n	Panel Part No. 00H (RIGHT 1) 01H (RIGHT 2) 02H (LEFT)
0mmmmmmm	mm	Bank Select MSB
0lllllll	ll	Bank Select LSB
0ppppppp	pp	Program Change
11110111	F7	End of Exclusive

3-6-4-5 PANEL VOICE VOLUME SETTING (Receive only)

binary	hexadecimal	
11110000	F0	Exclusive status
01000011	43	YAMAHA ID
01110011	73	Clavinova ID
01000101	01	Clavinova common ID
00100010	22	Piano Live Exclusive Substatus
00000001	01	Panel Voice Volume Setting Substatus
0000nnnn	0n	Panel Part No. 00H (RIGHT 1) 01H (RIGHT 2) 02H (LEFT)
0vvvvvvv	vv	Value (0 - 7FH)
11110111	F7	End of Exclusive

3-6-4-6 PANEL VOICE REVERB DEPTH SETTING (Receive only)

binary	hexadecimal	
11110000	F0	Exclusive status
01000011	43	YAMAHA ID
01110011	73	Clavinova ID
01000101	01	Clavinova common ID
00100010	22	Piano Live Exclusive Substatus
00000010	02	Panel Voice Reverb Depth Setting Substatus
0000nnnn	0n	Panel Part No. 00H (RIGHT 1) 01H (RIGHT 2) 02H (LEFT)
0vvvvvvv	vv	Value (0 - 7FH)
11110111	F7	End of Exclusive

3-6-4-7 PANEL VOICE EFFECT DEPTH SETTING (Receive only)

binary	hexadecimal	
11110000	F0	Exclusive status
01000011	43	YAMAHA ID
01110011	73	Clavinova ID
01000101	01	Clavinova common ID
00100010	22	Piano Live Exclusive Substatus
00000011	03	Panel Voice Effect Depth Setting Substatus
0000nnnn	0n	Panel Part No. 00H (RIGHT 1) 01H (RIGHT 2) 02H (LEFT)
0vvvvvvv	vv	Value (0 - 7FH)
11110111	F7	End of Exclusive

3-6-4-8 MIDI FA CANCEL (Receive only)

binary	hexadecimal	
11110000	F0	Exclusive status
01000011	43	YAMAHA ID
01110011	73	Clavinova ID
01000101	01	Clavinova common ID
01100001	61	MIDI FA Cancel
11110111	F7	End of Exclusive

If this message is received, even if FAH is received the Rhythm will not start.

3-6-5 SPECIAL OPERATORS

3-6-5-1 SPLIT POINT

binary	hexadecimal	
11110000	F0	Exclusive status
01000011	43	YAMAHA ID
01110011	73	Clavinova ID
01000101	01	Clavinova common ID
00010001	11	Sub ID
00000000	00	
00010100	14	Split Point
0ddddddd	DD	Split Key No.
11110111	F7	End of Exclusive

3-6-5-2 STYLE NUMBER

binary	hexadecimal	
11110000	F0	Exclusive status
01000011	43	YAMAHA ID
01110011	73	Clavinova ID
01011010	5E	CVP-103 ID
00010001	11	Sub ID
00000000	00	Channel No. (always 00)
00010110	16	Style No. Control No.
0mmmmmmm	mm	Style No. MSB
0lllllll	ll	Style No. LSB
11110111	F7	End of Exclusive

3-6-5-3 FINGERING

binary	hexadecimal	
11110000	F0	Exclusive status
01000011	43	YAMAHA ID
01110011	73	Clavinova ID
01000101	01	Clavinova common ID
00010001	11	Sub ID
00000000	00	
01000000	40	Fingering
0000dddd	0D	0D: 00H(Off),01H(Single Finger), 02H(Fingered 1),03H(Fingered 2), 04H(Full Keyboard),07H(Multi Finger)
11110111	F7	End of Exclusive

3-6-5-4 ACCOMP VOLUME

bbinary	hexadecimal	
11110000	F0	Exclusive status
01000011	43	YAMAHA ID
01110011	73	Clavinova ID
01000101	01	Clavinova common ID
00010001	11	Sub ID
0000nnnn	0N	Part: 00H(All Part),05H(Rhythm),0AH(Bass), 06H(Chord),0DH(Pad),07H(Phrase)
01000000	42	Accomp Volume
0ddddddd	DD	Volume Data: 00H~7FH
11110111	F7	End of Exclusive

3-6-5-5 CHANNEL DETUNE

binary	hexadecimal	
11110000	F0	Exclusive status
01000011	43	YAMAHA ID
01110011	73	Clavinova ID
01000101	01	Clavinova common ID
00010001	11	Sub ID
0000nnnn	0N	N = MIDI Channel
01000011	43	Dual Detune
0vvvvvvv	VV	Value VV: 00H - 40H - 7FH (-64 - 0 - +63)
11110111	F7	End of Exclusive

The Channel Detune message only affects the specified channel.

3-6-5-6 VOLUME ,EXPRESSION AND PAN REALTIME CONTROL OFF

binary	hexadecimal	
11110000	F0	Exclusive status
01000011	43	YAMAHA ID
01110011	73	Clavinova ID
01000101	01	Clavinova common ID
00010001	11	Sub ID
0000nnnn	0N	N = MIDI Channel
01001001	45	Volume and Expression Realtime Control Off
0vvvvvvv	VV	Value VV: off=7FH, on=00H
11110111	F7	End of Exclusive

When “On” is received, subsequent volume, expression, and PAN changes are only valid after the reception of the next key on. Normal operation resumes when “Off” is received.

3-6-5-7 MIDI KEY LED MODE ON / OFF (Receive only)

binary	hexadecimal	
11110000	F0	Exclusive status
01000011	43	YAMAHA ID
01110011	73	Clavinova ID
01000101	01	Clavinova common ID
00010001	11	Sub ID
0000nnnn	0N	N = MIDI Channel
01000111	47	MIDI Key LED Mode On / Off
0ddddddd	DD	DD: 00H(Key LED Mode Off), 01H(Key LED Mode On + no tone), 02H(Key LED Mode On + tone)
11110111	F7	End of Exclusive

3-6-6 Others

3-6-6-1 MIDI MASTER TUNING (Receive only)

binary	hexadecimal	
11110000	F0	Exclusive status
01000011	43	YAMAHA ID
0001nnnn	1N	When N is received N=0-F, whichever is received.
00100111	27	Model ID
00110000	30	Sub ID
00000000	00	
00000000	00	
0mmmmmmm	MM	Master Tune MSB
0lllllll	LL	Master Tune LSB
0cccccccc	CC	don’t care
11110111	F7	End of Exclusive

Changes tuning of all channels.
MM, LL values are used to define the MIDI Master Tuning value.

T = M – 128

T: Tuning value (-99 cents to +99 cents)
M:A single byte value (28–228) that consists of bits 0–3 of MM as MSB, bits 0–3 of LL as LSB.

This setting is not reset when the GM System or XG System is turned on.

< Table 1-1>

Parameter Basic Address

	Parameter Change Address (H)	(M)	(L)	Description
SYSTEM	00	00	00	System
	00	00	7D	Drum Setup Reset
	00	00	7E	XG System On
	00	00	7F	All Parameter Reset
INFORMATION	01	00	00	System Information
EFFECT 1	02	01	00	Effect1(Reverb,Chorus,Variation)
MULTI PART	08	00	00	Multi Part 1
		:		
	08	0F	00	Multi Part 16
DRUM	30	0D	00	Drum Setup 1 ——► Address
	31	0D	00	Drum Setup 2

Address			Parameter
3n	0D	00	note number 13
3n	0E	00	note number 14
:	:		
3n	5B	00	note number 91

< Table 1-2 >

MIDI Parameter Change table (SYSTEM)

Address (H)			Size (H)	Data (H)	Parameter Name	Description	Default Value(H)
00	00	00	4	0000	Master Tune	-102.4..+102.3[cent]	00 04 00 00
		01		..07FF		1stbit3-0 -> bit15-12	(0400)
		02				2ndbit3-0 -> bit11-8	
		03				3rdbit3-0 -> bit7-4	
						4thbit3-0 -> bit3-0	
		04	1	00..7F	Master Volume	0..127	7F
		05	1		Not Used		
		06	1	28..58	Transpose	-24..+24[semitones]	40
		7D		n	Drum Setup Reset	n=Drum Setup Number	
		7E		00	XG System On	00=XG Sytem on	
		7F		00	All Parameter Reset	00=on (receive only)	
TOTAL SIZE			6				

< Table 1-3 >

MIDI Parameter table (System information)

Address (H)			Size (H)	Data (H)	Parameter Name	Description
01	00	00	E	20..7F	Model Name	32..127(ASCII)
		:				
		0D				
		0E	1	00		
		0F	1	01		
TOTAL SIZE			10			

(Transmitted by Dump Request. Not received. Bulk Dump Only)

< Table 1-4 >

MIDI Parameter Change table (EFFECT 1)

Address (H)			Size (H)	Data (H)	Parameter Name	Description	Default Value(H)
02	01	00	2	00..7F	Reverb Type MSB	Refer to the Effect Type List	01(=HALL1)
				00..7F	Reverb Type LSB	00 : basic type	00
		02	1	00..7F	Reverb Parameter 1	Refer to the Ef. Parameter List	Depend on Reverb type
		03	1	00..7F	Reverb Parameter 2	Refer to the Ef. Parameter List	Depend on Reverb type
		04	1	00..7F	Reverb Parameter 3	Refer to the Ef. Parameter List	Depend on Reverb type
		05	1	00..7F	Reverb Parameter 4	Refer to the Ef. Parameter List	Depend on Reverb type
		06	1	00..7F	Reverb Parameter 5	Refer to the Ef. Parameter List	Depend on Reverb type
		07	1	00..7F	Reverb Parameter 6	Refer to the Ef. Parameter List	Depend on Reverb type
		08	1	00..7F	Reverb Parameter 7	Refer to the Ef. Parameter List	Depend on Reverb type
		09	1	00..7F	Reverb Parameter 8	Refer to the Ef. Parameter List	Depend on Reverb type
		0A	1	00..7F	Reverb Parameter 9	Refer to the Ef. Parameter List	Depend on Reverb type
		0B	1	00..7F	Reverb Parameter 10	Refer to the Ef. Parameter List	Depend on Reverb type
		0C	1	00..7F	Reverb Return	-∞..0..+6dB(0..96..127)	40
		0D	1	01..7F	Reverb Pan	L63..C..R63(1..64..127)	40
TOTAL SIZE			0E				
02	01	10	1	00..7F	Reverb Parameter 11	Refer to the Ef. Parameter List	Depend on Reverb type
		11	1	00..7F	Reverb Parameter 12	Refer to the Ef. Parameter List	Depend on Reverb type
		12	1	00..7F	Reverb Parameter 13	Refer to the Ef. Parameter List	Depend on Reverb type
		13	1	00..7F	Reverb Parameter 14	Refer to the Ef. Parameter List	Depend on Reverb type
		14	1	00..7F	Reverb Parameter 15	Refer to the Ef. Parameter List	Depend on Reverb type
		15	1	00..7F	Reverb Parameter 16	Refer to the Ef. Parameter List	Depend on Reverb type
TOTAL SIZE			6				

02	01	20	2	00..7F	Chorus Type MSB	Refer to the Effect Type List	41(=Chorus1)
				00..7F	Chorus Type LSB	00 : basic type	00
		22	1	00..7F	Chorus Parameter 1	Refer to the Ef. Parameter List	Depend on Chorus Type
		23	1	00..7F	Chorus Parameter 2	Refer to the Ef. Parameter List	Depend on Chorus Type
		24	1	00..7F	Chorus Parameter 3	Refer to the Ef. Parameter List	Depend on Chorus Type
		25	1	00..7F	Chorus Parameter 4	Refer to the Ef. Parameter List	Depend on Chorus Type
		26	1	00..7F	Chorus Parameter 5	Refer to the Ef. Parameter List	Depend on Chorus Type
		27	1	00..7F	Chorus Parameter 6	Refer to the Ef. Parameter List	Depend on Chorus Type
		28	1	00..7F	Chorus Parameter 7	Refer to the Ef. Parameter List	Depend on Chorus Type
		29	1	00..7F	Chorus Parameter 8	Refer to the Ef. Parameter List	Depend on Chorus Type
		2A	1	00..7F	Chorus Parameter 9	Refer to the Ef. Parameter List	Depend on Chorus Type
		2B	1	00..7F	Chorus Parameter 10	Refer to the Ef. Parameter List	Depend on Chorus Type
		2C	1	00..7F	Chorus Return	-∞..0..+6dB(0..96..127)	40
		2D	1	01..7F	Chorus Pan	L63..C..R63(1..64..127)	40
		2E	1	00..7F	Send Chorus To Reverb	-∞..0..+6dB(0..96..127)	00
TOTAL SIZE			0F				
02	01	30	1	00..7F	Chorus Parameter 11	Refer to the Ef. Parameter List	Depend on Chorus Type
		31	1	00..7F	Chorus Parameter 12	Refer to the Ef. Parameter List	Depend on Chorus Type
		32	1	00..7F	Chorus Parameter 13	Refer to the Ef. Parameter List	Depend on Chorus Type
		33	1	00..7F	Chorus Parameter 14	Refer to the Ef. Parameter List	Depend on Chorus Type
		34	1	00..7F	Chorus Parameter 15	Refer to the Ef. Parameter List	Depend on Chorus Type
		35	1	00..7F	Chorus Parameter 16	Refer to the Ef. Parameter List	Depend on Chorus Type
TOTAL SIZE			6				
02	01	40	2	00..7F	Variation Type MSB	Refer to the Effect Type List	“05(=DELAY L,C,R)”
				00..7F	Variation Type LSB	00 : basic type	00
		42	2	00..7F	Vari. Param. 1 MSB	Refer to the Ef. Parameter List	Depend on Vari. Type
				00..7F	Vari. Param. 1 LSB	Refer to the Ef. Parameter List	Depend on Vari. Type
		44	2	00..7F	Vari. Param. 2 MSB	Refer to the Ef. Parameter List	Depend on Vari. Type
				00..7F	Vari. Param. 2 LSB	Refer to the Ef. Parameter List	Depend on Vari. Type
		46	2	00..7F	Vari. Param. 3 MSB	Refer to the Ef. Parameter List	Depend on Vari. Type
				00..7F	Vari. Param. 3 LSB	Refer to the Ef. Parameter List	Depend on Vari. Type
		48	2	00..7F	Vari. Param. 4 MSB	Refer to the Ef. Parameter List	Depend on Vari. Type
				00..7F	Vari. Param. 4 LSB	Refer to the Ef. Parameter List	Depend on Vari. Type
		4A	2	00..7F	Vari. Param. 5 MSB	Refer to the Ef. Parameter List	Depend on Vari. Type
				00..7F	Vari. Param. 5 LSB	Refer to the Ef. Parameter List	Depend on Vari. Type
		4C	2	00..7F	Vari. Param. 6 MSB	Refer to the Ef. Parameter List	Depend on Vari. Type
				00..7F	Vari. Param. 6 LSB	Refer to the Ef. Parameter List	Depend on Vari. Type
		4E	2	00..7F	Vari. Param. 7 MSB	Refer to the Ef. Parameter List	Depend on Vari. Type
				00..7F	Vari. Param. 7 LSB	Refer to the Ef. Parameter List	Depend on Vari. Type
		50	2	00..7F	Vari. Param. 8 MSB	Refer to the Ef. Parameter List	Depend on Vari. Type
				00..7F	Vari. Param. 8 LSB	Refer to the Ef. Parameter List	Depend on Vari. Type
		52	2	00..7F	Vari. Param. 9 MSB	Refer to the Ef. Parameter List	Depend on Vari. Type
				00..7F	Vari. Param. 9 LSB	Refer to the Ef. Parameter List	Depend on Vari. Type
		54	2	00..7F	Vari. Param. 10 MSB	Refer to the Ef. Parameter List	Depend on Vari. Type
				00..7F	Vari. Param. 10 LSB	Refer to the Ef. Parameter List	Depend on Vari. Type
		56	1	00..7F	Variation Return	-∞..0..+6dB(0..96..127)	40
		57	1	01..7F	Variation Pan	L63..C..R63(1..64..127)	40
		58	1	00..7F	Send Vari. To Reverb	-∞..0..+6dB(0..96..127)	00
		59	1	00..7F	Send Vari. To Chorus	-∞..0..+6dB(0..96..127)	00
		5A	1	00..01	Variation Connection	0:insertion,1:system	00
		5B	1	00..1F	Variation Part	part1..32(0..31),off(127)	7F
		5C	1	01..7F	MW Vari. Ctrl Depth	-63..+63	40
		5D	1	01..7F	PB Vari. Ctrl Depth	-63..+63	40
		5E	1	01..7F	CAT Vari. Ctrl Depth	-63..+63	40
		5F	1	01..7F	Not Used		
		60	1	01..7F	Not Used		
TOTAL SIZE			21				
02	01	70	1	00..7F	Variation Parameter 11	option Parameter	Depend on Variation Type
		71	1	00..7F	Variation Parameter 12	option Parameter	Depend on Variation Type
		72	1	00..7F	Variation Parameter 13	option Parameter	Depend on Variation Type
		73	1	00..7F	Variation Parameter 14	option Parameter	Depend on Variation Type
		74	1	00..7F	Variation Parameter 15	option Parameter	Depend on Variation Type
		75	1	00..7F	Variation Parameter 16	option Parameter	Depend on Variation Type
TOTAL SIZE			6				

< Table 1-5 >

MIDI Parameter Change table (MULTI PART)

Address (H)			Size (H)	Data (H)	Parameter Name	Description	Default Value(H)
08	nn	00	1	00..20	Element Reserve	0..32	0(Part10),2(Others)
	nn	01	1	00..7F	Bank Select MSB	0..127	7F(Part10),00(Others)
	nn	02	1	00..7F	Bank Select LSB	0..127	00
	nn	03	1	00..7F	Program Number	1..128	00
	nn	04	1	00..0F, 7F	Rcv Channel	0..16;1..16,127;off	Part No.
	nn	05	1	00..01	Mono/Poly Mode	0:mono,1:poly	01
	nn	06	1	00..02	Same Note Number Key On Assign	0:single 1:multi 2:inst (for DRUM)	01
	nn	07	1	00..02	Part Mode	0:normal 1..3:drum thru,drum1..2	00 (Except Part10) 02 (Part10)
	nn	08	1	28..58	Note Shift	-24..+24[semitones]	40
	nn	09	2	00..FF	Detune	-12.8..+12.7[Hz]	08 00
	nn	0A				1st bit3..0 -> bit7..4 2nd bit3..0 -> bit3..0	(80)
	nn	0B	1	00..7F	Volume	0..127	64
	nn	0C	1	00..7F	Velocity Sense Depth	0..127	40
	nn	0D	1	00..7F	Velocity Sense Offset	0..127	40
	nn	0E	1	00..7F	Pan	0:random L63..C..R63(1..64..127)	40

	nn	0F	1	00..7F	Note Limit Low	C-2..G8	00
	nn	10	1	00..7F	Note Limit High	C-2..G8	7F
	nn	11	1	00..7F	Dry Level	0..127	7F
	nn	12	1	00..7F	Chorus Send	0..127	00
	nn	13	1	00..7F	Reverb Send	0..127	28
	nn	14	1	00..7F	Variation Send	0..127	00
	nn	15	1	00..7F	Vibrato Rate	-64..+63	40
	nn	16	1	00..7F	Vibrato Depth	-64..+63	40
	nn	17	1	00..7F	Vibrato Delay	-64..+63	40
	nn	18	1	00..7F	Filter Cutoff Freq.	-64..+63	40
	nn	19	1	00..7F	Filter Resonance	-64..+63	40
	nn	1A	1	00..7F	EG Attack Time	-64..+63	40
	nn	1B	1	00..7F	EG Decay Time	-64..+63	40
	nn	1C	1	00..7F	EG Release Time	-64..+63	40
	nn	1D	1	28..58	MW Pitch Control	-24..+24[semitones]	40
	nn	1E	1	00..7F	MW Filter Control	-9600..+9450[cent]	40
	nn	1F	1	00..7F	MW Amp. Control	-100..+100[%]	40
	nn	20	1	00..7F	MW LFO PMod Depth	0..127	0A
	nn	21	1	00..7F	MW LFO FMod Depth	0..127	00
	nn	22	1	00..7F	MW LFO AMod Depth	0..127	00
	nn	23	1	28..58	Bend Pitch Control	-24..+24[semitones]	42
	nn	24	1	00..7F	Bend Filter Control	-9600..+9450[cent]	40
	nn	25	1	00..7F	Bend Amp. Control	-100..+100[%]	40
	nn	26	1	00..7F	Bend LFO PMod Depth	0..127	00
	nn	27	1	00..7F	Bend LFO FMod Depth	0..127	00
	nn	28	1	00..7F	Bend LFO AMod Depth	0..127	00
TOTAL SIZE			29				
	nn	30	1		Not Used		
		:	:		:		
	nn	34	1		Not Used		
	nn	36	1		Not Used		
		:	:		:		
	nn	40	1		Not Used		
	nn	41	1	00..7F	Scale Tuning C	-64..+63[cent]	40
	nn	42	1	00..7F	Scale Tuning C#	-64..+63[cent]	40
	nn	43	1	00..7F	Scale Tuning D	-64..+63[cent]	40
	nn	44	1	00..7F	Scale Tuning D#	-64..+63[cent]	40
	nn	45	1	00..7F	Scale Tuning E	-64..+63[cent]	40
	nn	46	1	00..7F	Scale Tuning F	-64..+63[cent]	40
	nn	47	1	00..7F	Scale Tuning F#	-64..+63[cent]	40
	nn	48	1	00..7F	Scale Tuning G	-64..+63[cent]	40
	nn	49	1	00..7F	Scale Tuning G#	-64..+63[cent]	40
	nn	4A	1	00..7F	Scale Tuning A	-64..+63[cent]	40
	nn	4B	1	00..7F	Scale Tuning A#	-64..+63[cent]	40
	nn	4C	1	00..7F	Scale Tuning B	-64..+63[cent]	40
	nn	4D	1	28..58	CAT Pitch Control	-24..+24[semitones]	40
	nn	4E	1	00..7F	CAT Filter Control	-9600..+9450[cent]	40
	nn	4F	1	00..7F	CAT Amplitude Control	-100..+100[%]	40
	nn	50	1	00..7F	CAT LFO PMod Depth	0..127	00
	nn	51	1	00..7F	CAT LFO FMod Depth	0..127	00
	nn	52	1	00..7F	CAT LFO AMod Depth	0..127	00
	nn	53			Not Used		
		:			:		
		66			Not Used		
	nn	67	1	00..01	Portamento Switch	off/on	00
	nn	68	1	00..7F	Portamento Time	0..127	00
	nn	69			Not Used		
		:			:		
		6E			Not Used		
TOTAL SIZE			3F				
08	nn	70	1		Not Used	Don’t care	
	nn	71	1		Not Used	Don’t care	
TOTAL SIZE			04				
08	nn	74	1		Not Used	Don’t care	
		75	1		Not Used	Don’t care	
		78	1		Not Used	Don’t care	
		79	1		Not Used	Don’t care	
		7A	1		Not Used	Don’t care	
		7B	1		Not Used	Don’t care	
		7C	1		Not Used	Don’t care	
		7D	1		Not Used	Don’t care	
		7E	1		Not Used	Don’t care	
		7F	1		Not Used	Don’t care	
TOTAL SIZE			0C				

nn = PartNumber

If there is a Drum Voice assigned to the Part, the following parameters are ineffective.

- Bank Select LSB
- Amp EG
- Portamento
- Soft Pedal
- Mono/Poly
- Scale Tuning

<Table 1-6 >

MIDI Parameter Change table (DRUM SETUP)

Address (H)			Size (H)	Data (H)	Parameter Name	Description	Default Value(H)
3n	rr	00	1	00..7F	Pitch Coarse	-64..+63	40
3n	rr	01	1	00..7F	Pitch Fine	-64..+63[cent]	40
3n	rr	02	1	00..7F	Level	0..127	Depend on the Note
3n	rr	03	1	00..7F	Alternate Group	0:off,1..127	Depend on the Note
3n	rr	04	1	00..7F	Pan	0:random L63..C..R63(1..64..127)	Depend on the Note
3n	rr	05	1	00..7F	Reverb Send Level	0..127	Depend on the Note
3n	rr	06	1	00..7F	Chorus Send Level	0..127	Depend on the Note
3n	rr	07	1	00..7F	Variation Send Level	0..127	7F
3n	rr	08	1	00..01	Key Assign	0:single,1:multi	00
3n	rr	09	1	00..01	Rcv Note Off	off/on	Depend on the Note
3n	rr	0A	1	00..01	Rcv Note On	off/on	01
3n	rr	0B	1	00..7F	Filter Cutoff Freq.	-64..63	40
3n	rr	0C	1	00..7F	Filter Resonance	-64..63	40
3n	rr	0D	1	00..7F	EG Attack Rate	-64..63	40
3n	rr	0E	1	00..7F	EG Decay1 Rate	-64..63	40
3n	rr	0F	1	00..7F	EG Decay2 Rate	-64..63	40
TOTAL SIZE		10					

n:Drum Setup Number(0 - 1)
rr:note number(0DH - 5BH)

If XG SYSTEM ON and/or GM SYSTEM ON message is received, all Drum Setup Parameter will be reset to default values.
According to the Drum Setup Reset message, individual Drum Setup Parameters can be reset to default values.

<Table 1-7 > Effect Map

If the received value does not contain an effect type in the TYPE LSB, the LSB will be directed to TYPE 0.
The panel effects are marked by "*"

REVERB TYPE

TYPE MSB		TYPE LSB												
DEC	HEX	00	01	02	03	...	07	08	...	16	17	18	19	20
000	0	NO EFFECT												
001	1	*HALL1	HALL2							*HALL2	*HALL3	*HALL4		
002	2	ROOM1	ROOM2	ROOM3						*ROOM1	*ROOM2	*ROOM3	*ROOM4	
003	3	STAGE1	STAGE2							*STAGE1	*STAGE2			
004	4	PLATE								*PLATE1	*PLATE2			
005	5	NO EFFECT												
:	:	:												
015	F	NO EFFECT												
016	10	WHITE ROOM												
017	11	TUNNEL												
018	12	CANYON												
019	13	BASEMENT												
020	14	NO EFFECT												
:	:	:												
127	7F	NO EFFECT												

CHORUS TYPE

TYPE MSB		TYPE LSB												
DEC	HEX	00	01	02	03	...	07	08	...	16	17	18	19	20
000	0	NO EFFECT												
001	1	NO EFFECT												
:	:	:												
064	40	NO EFFECT												
065	41	CHORUS1	CHORUS2	*CHORUS5				CHORUS4						
066	42	CELESTE1	*CHORUS4	CELESTE3				*CHORUS2		*CHORUS3	*CHORUS1			
067	43	FLANGER 1	*FLANGER 4					*FLANGER1		*FLANGER2	*FLANGER3			
068	44	NO EFFECT												
:	:	:												
127	7F	NO EFFECT												

VARIATION TYPE(0 – 63)

TYPE MSB		TYPE LSB												
DEC	HEX	00	01	02	03	...	07	08	...	16	17	18	19	20
000	0	NO EFFECT												
001	1	*HALL1	HALL2							*HALL2	*HALL3	*HALL4		
002	2	ROOM1	ROOM2	ROOM3						*ROOM1	*ROOM2	*ROOM3	*ROOM4	
003	3	STAGE1	STAGE2							*STAGE1	*STAGE2			
004	4	PLATE								*PLATE1	*PLATE2			
005	5	DELAY L,C,R								*DELAY LCR				
006	6	*DELAY LR												
007	7	*ECHO												
008	8	*CROSS DELAY												
009	9	*EARLY REF1	*EARLYREF2											
010	A	*GATE REVERB												
011	B	*REVERSE GATE												
012	C	NO EFFECT or THRU												
:	:	:												
019	13	NO EFFECT or THRU												
020	14	KARAOKE 1	KARAOKE 2	KARAOKE 3										
021	15	NO EFFECT or THRU												
:	:	:												
063	3F	NO EFFECT or THRU												

VARIATION TYPE(64 – 127)

TYPE MSB		TYPE LSB												
DEC	HEX	00	01	02	03	...	07	08	...	16	17	18	19	20
064	40	THRU												
065	41	CHORUS1	CHORUS2	*CHORUS5				CHORUS4						
066	42	CELESTE1	*CHORUS4	CELESTE3				*CHORUS2		*CHORUS3	*CHORUS1	*Rotary Sp5		
067	43	FLANGER 1	*FLANGER4					*FLANGER1		*FLANGER2	*FLANGER3			
068	44	SYMPHONIC								*SYMPHONIC				
069	45	ROTARY SP.								*ROTARYSP1				
070	46	TREMOLO								*TREMOLO1	*ROTARYSP4			
071	47	AUTO PAN								*AUTO PAN	*ROTARYSP2	*ROTARYSP3	*TREMOLO2	*GTRTREMOLO
072	48	*PHASER						PHASER 2						
073	49	DISTORTION												
074	4A	OVER DRIVE												
075	4B	AMP SIM.								*DIST HARD	*DIST SOFT			
076	4C	3BAND EQ								*EQ DISCO	*EQ TEL			
077	4D	2BAND EQ												
078	4E	AUTO WAH								*AUTO WAH				
079	4F	THRU												
:	:													
127	7F	THRU												

<Table 1-8 > Effect Parameter List

XG Effect Name
HALL1,HALL2
ROOM1,ROOM2,ROOM3
STAGE1,STAGE2
PLATE (reverb, variation, insertion block)

No.	Parameter	Display	Value	See Table	Comment	Control
1	Reverb Time	0.3-30.0s	0-69	table#4		
2	Diffusion	0-10	0-10			
3	Initial Delay	0.1mS-99.3mS	0-63	table#5		
4	HPF Cutoff	Thru-8.0kHz	0-52	table#3		
5	LPF Cutoff	1.0k-Thru	34-60	table#3		
6						
7						
8						
9						
10	Dry/Wet	D63>W - D=W - D<W63	1-127			•
11	Rev Delay	0.1mS-99.3mS	0-63	table#5		
12	Density	0-3 (reverb, variation block)	0-3			
13	Er/Rev Balance	E63>R - E=R - E<R63	1-127			
14						
15	Feedback Level	-63-+63	1-127			
16						

WHITE ROOM
TUNNEL
CANYON
BASEMENT (reverb, variation block)

No.	Parameter	Display	Value	See Table	Comment	Control
1	Reverb Time	0.3-30.0s	0-69	table#4		
2	Diffusion	0-10	0-10			
3	Initial Delay	0.1mS-99.3mS	0-63	table#5		
4	HPF Cutoff	Thru-8.0kHz	0-52	table#3		
5	LPF Cutoff	1.0k-Thru	34-60	table#3		
6	Width	0.5-10.2m	0-37	table#11		
7	Heigt	0.5-20.2m	0-73	table#11		
8	Depth	0.5-30.2m	0-104	table#11		
9	Wall Vary	0-30	0-30			
10	Dry/Wet	D63>W - D=W - D<W63	1-127			•
11	Rev Delay	0.1mS-99.3mS	0-63	table#5		
12	Density	0-3	0-3			
13	Er/Rev Balance	E63>R - E=R - E<R63	1-127			
14						
15	Feedback Level	-63-+63	1-127			
16						

DELAY L,C,R (variation, insertion block)

No.	Parameter	Display	Value	See Table	Comment	Control
1	Lch Delay	0.1-715.0ms (variation block)	1-7150			
2	Rch Delay	0.1-715.0ms (variation block)	1-7150			
3	Cch Delay	0.1-715.0ms (variation block)	1-7150			
4	Feedback Delay	0.1-715.0ms (variation block)	1-7150			
5	Feedback Level	-63-+63	1-127			
6	Cch Level	0-127	0-127			
7	High Damp	0.1-1.0	1-10			
8						
9						
10	Dry/Wet	D63>W - D=W - D<W63	1-127			●
11						
12						
13	EQ Low Frequency	50Hz-2.0kHz	8-40	table#3		
14	EQ Low Gain	-12-+12dB	52-76			
15	EQ High Frequency	500Hz-16.0kHz	28-58	table#3		
16	EQ High Gain	-12-+12dB	52-76			

DELAY L,R (variation, insertion block)

No.	Parameter	Display	Value	See Table	Comment	Control
1	Lch Delay	0.1-715.0ms (variation block)	1-7150			
2	Rch Delay	0.1-715.0ms (variation block)	1-7150			
3	Feedback Delay 1	0.1-715.0ms (variation block)	1-7150			
4	Feedback Delay 2	0.1-715.0ms (variation block)	1-7150			
5	Feedback Level	-63-+63	1-127			
6	High Damp	0.1-1.0	1-10			
7						
8						
9						
10	Dry/Wet	D63>W - D=W - D<W63	1-127			●
11						
12						
13	EQ Low Frequency	50Hz-2.0kHz	8-40	table#3		
14	EQ Low Gain	-12-+12dB	52-76			
15	EQ High Frequency	500Hz-16.0kHz	28-58	table#3		
16	EQ High Gain	-12-+12dB	52-76			

ECHO (variation, insertion block)

No.	Parameter	Display	Value	See Table	Comment	Control
1	Lch Delay1	0.1-355.0ms (variation block)	1-3550			
2	Lch Feedback Level	-63-+63	1-127			
3	Rch Delay1	0.1-355.0ms (variation block)	1-3550			
4	Rch Feedback Level	-63-+63	1-127			
5	High Damp	0.1-1.0	1-10			
6	Lch Delay2	0.1-355.0ms (variation block)	1-3550			
7	Rch Delay2	0.1-355.0ms (variation block)	1-3550			
8	Delay2 Level	0-127	0-127			
9						
10	Dry/Wet	D63>W - D=W - D<W63	1-127			●
11						
12						
13	EQ Low Frequency	50Hz-2.0kHz	8-40	table#3		
14	EQ Low Gain	-12-+12dB	52-76			
15	EQ High Frequency	500Hz-16.0kHz	28-58	table#3		
16	EQ High Gain	-12-+12dB	52-76			

CROSS DELAY (variation, insertion block)

No.	Parameter	Display	Value	See Table	Comment	Control
1	L->R Delay	0.1-355.0ms (variation block)	1-3550			
2	R->L Delay	0.1-355.0ms (variation block)	1-3550			
3	Feedback Level	-63-+63	1-127			
4	Input Select	L,R,L&R	0-2			
5	High Damp	0.1-1.0	1-10			
6						
7						
8						
9						
10	Dry/Wet	D63>W - D=W - D<W63	1-127			●
11						
12						
13	EQ Low Frequency	50Hz-2.0kHz	8-40	table#3		
14	EQ Low Gain	-12-+12dB	52-76			
15	EQ High Frequency	500Hz-16.0kHz	28-58	table#3		
16	EQ High Gain	-12-+12dB	52-76			

EARLY REF1,EARLY REF2(variation block)

No.	Parameter	Display	Value	See Table	Comment	Control
1	Type	S-H, L-H, Rdm, Rvs, Plt, Spr	0-5			
2	Room Size	0.1-7.0	0-44	table#6		
3	Diffusion	0-10	0-10			
4	Initial Delay	0.1mS-99.3mS	0-63	table#5		
5	Feedback Level	-63-+63	1-127			
6	HPF Cutoff	Thru-8.0kHz	0-52	table#3		
7	LPF Cutoff	1.0k-Thru	34-60	table#3		
8						
9						
10	Dry/Wet	D63>W - D=W - D<W63	1-127			●
11	Liveness	0-10	0-10			
12	Density	0-3	0-3			
13	High Damp	0.1-1.0	1-10			
14						
15						
16						

GATE REVERB
REVERSE GATE (variation block)

No.	Parameter	Display	Value	See Table	Comment	Control
1	Type	TypeA,TypeB	0-1			
2	Room Size	0.1-20.0	0-127	table#6		
3	Diffusion	0-10	0-10			
4	Initial Delay	0.1mS-200.0mS	0-127	table#5		
5	Feedback Level	-63-+63	1-127			
6	HPF Cutoff	Thru-8.0kHz	0-52	table#3		
7	LPF Cutoff	1.0k-Thru	34-60	table#3		
8						
9						
10	Dry/Wet	D63>W - D=W - D<W63	1-127			●
11	Liveness	0-10	0-10			
12	Density	0-3	0-3			
13	High Damp	0.1-1.0	1-10			
14						
15						
16						

KARAOKE1,2,3 (variation, insertion block)

No.	Parameter	Display	Value	See Table	Comment	Control
1	Delay Time	0.1mS-400.0mS	0-127	table#7		
2	Feedback Level	-63-+63	1-127			
3	HPF Cutoff	Thru-8.0kHz	0-52	table#3		
4	LPF Cutoff	1.0k-Thru	34-60	table#3		
5						
6						
7						
8						
9						
10	Dry/Wet	D63>W - D=W - D<W63	1-127			●
11						
12						
13						
14						
15						
16						

CHORUS1,2,3,4
CELESTE1,2,3,4 (chorus, variation, insertion block)

No.	Parameter	Display	Value	See Table	Comment	Control
1	LFO Frequency	0.00Hz-39.7Hz	0-127	table#1		
2	LFO Depth	0-127	0-127			
3	Feedback Level	-63-+63	1-127			
4	Delay Offset	0.0mS-50mS	0-127	table#2		
5						
6	EQ Low Frequency	50Hz-2.0kHz	8-40	table#3		
7	EQ Low Gain	-12-+12dB	52-76			
8	EQ High Frequency	500Hz-16.0kHz	28-58	table#3		
9	EQ High Gain	-12-+12dB	52-76			
10	Dry/Wet	D63>W - D=W - D<W63	1-127			●
11						
12						
13						
14						
15	Input Mode	mono/stereo	0-1			
16						

FLANGER1,2,3 (chorus, variation, insertion block)

No.	Parameter	Display	Value	See Table	Comment	Control
1	LFO Frequency	0.00Hz-39.7Hz	0-127	table#1		
2	LFO Depth	0-127	0-127			
3	Feedback Level	-63-+63	1-127			
4	Delay Offset	0.0mS-50mS	0-127	table#2		
5						
6	EQ Low Frequency	50Hz-2.0kHz	8-40	table#3		
7	EQ Low Gain	-12-+12dB	52-76			
8	EQ High Frequency	500Hz-16.0kHz	28-58	table#3		
9	EQ High Gain	-12-+12dB	52-76			
10	Dry/Wet	D63>W - D=W - D<W63	1-127			●
11						
12						
13						
14	LFO Phase Difference	-180-+180deg(resolution=3deg.)	4-124			
15						
16						

SYMPHONIC (chorus, variation, insertion block)

No.	Parameter	Display	Value	See Table	Comment	Control
1	LFO Frequency	0.00Hz-39.7Hz	0-127	table#1		
2	LFO Depth	0-127	0-127			
3	Delay Offset	0.0mS-50mS	0-127	table#2		
4						
5						
6	EQ Low Frequency	50Hz-2.0kHz	8-40	table#3		
7	EQ Low Gain	-12-+12dB	52-76			
8	EQ High Frequency	500Hz-16.0kHz	28-58	table#3		
9	EQ High Gain	-12-+12dB	52-76			
10	Dry/Wet	D63>W - D=W - D<W63	1-127			●
11						
12						
13						
14						
15						
16						

ENSEMBLE DETUNE (chorus, variation, insertion block)

No.	Parameter	Display	Value	See Table	Comment	Control
1	Detune	-50-+50cent	14-114			
2	Lch Init Delay	0.0mS-50mS	0-127	table#2		
3	Rch Init Delay	0.0mS-50mS	0-127	table#2		
4						
5						
6						
7						
8						
9						
10	Dry/Wet	D63>W - D=W - D<W63	1-127			●
11						
12						
13						
14						
15						
16						

AMBIENCE (variation block)

No.	Parameter	Display	Value	See Table	Comment	Control
1	Delay Time	0.0mS-50mS	0-127	table#2		
2	Output Phase	normal/invers	0-1			
3						
4						
5						
6	EQ Low Frequency	32Hz-2.0kHz	4-40	table#3		
7	EQ Low Gain	-12-+12dB	52-76			
8	EQ High Frequency	500Hz-16.0kHz	28-58	table#3		
9	EQ High Gain	-12-+12dB	52-76			
10	Dry/Wet	D63>W - D=W - D<W63	1-127			●
11						
12						
13						
14						
15						
16						

ROTARY SPEAKER (variation, insertion block)

No.	Parameter	Display	Value	See Table	Comment	Control
1	LFO Frequency	0.00Hz–39.7Hz	0–127	table#1		●
2	LFO Depth	0–127	0–127			
3						
4						
5						
6	EQ Low Frequency	50Hz–2.0kHz	8–40	table#3		
7	EQ Low Gain	-12–+12dB	52–76			
8	EQ High Frequency	500Hz–16.0kHz	28–58	table#3		
9	EQ High Gain	-12–+12dB	52–76			
10	Dry/Wet	D63>W – D=W – D<W63	1–127			
11						
12						
13						
14						
15						
16						

2WAY ROTARY SPEAKER (variation block)

No.	Parameter	Display	Value	See Table	Comment	Control
1	Rotor Speed	0.0Hz–39.7Hz	0–127	table#1		●
2	Drive Low	0–127	0–127			
3	Drive High	0–127	0–127			
4	Low/High	L63>H – L=H – L<H63	1–127			
5						
6	EQ Low Frequency	32Hz–2.0kHz	4–40	table#3		
7	EQ Low Gain	-12–+12dB	52–76			
8	EQ High Frequency	500Hz–16.0kHz	28–58	table#3		
9	EQ High Gain	-12–+12dB	52–76			
10						
11	Crossover Frequency	100Hz–10.0kHz	14–54	table#3		
12	Mic L-R Angle	0deg–180deg(resolution=3deg.)	0–60			
13						
14						
15						
16						

TREMOLO (variation, insertion block)

No.	Parameter	Display	Value	See Table	Comment	Control
1	LFO Frequency	0.00Hz–39.7Hz	0–127	table#1		●
2	AM Depth	0–127	0–127			
3	PM Depth	0–127	0–127			
4						
5						
6	EQ Low Frequency	50Hz–2.0kHz	8–40	table#3		
7	EQ Low Gain	-12–+12dB	52–76			
8	EQ High Frequency	500Hz–16.0kHz	28–58	table#3		
9	EQ High Gain	-12–+12dB	52–76			
10						
11						
12						
13						
14	LFO Phase Difference	-180–+180deg(resolution=3deg.)	4–124			
15	Input Mode	mono/stereo	0–1			
16						

AUTO PAN (variation, insertion block)

No.	Parameter	Display	Value	See Table	Comment	Control
1	LFO Frequency	0.00Hz–39.7Hz	0–127	table#1		●
2	L/R Depth	0–127	0–127			
3	F/R Depth	0–127	0–127			
4	PAN Direction	L<->R,L->R,L<-R,Lturn,Rturn,L/R	0–5			
5						
6	EQ Low Frequency	50Hz–2.0kHz	8–40	table#3		
7	EQ Low Gain	-12–+12dB	52–76			
8	EQ High Frequency	500Hz–16.0kHz	28–58	table#3		
9	EQ High Gain	-12–+12dB	52–76			
10						
11						
12						
13						
14						
15						
16						

PHASER 1 (chorus, variation, insertion block)

No.	Parameter	Display	Value	See Table	Comment	Control
1	LFO Frequency	0.00Hz–39.7Hz	0–127	table#1		
2	LFO Depth	0–127	0–127			
3	Phase Shift Offset	0–127	0–127			
4	Feedback Level	-63–+63	1–127			
5						
6	EQ Low Frequency	50Hz–2.0kHz	8–40	table#3		
7	EQ Low Gain	-12–+12dB	52–76			
8	EQ High Frequency	500Hz–16.0kHz	28–58	table#3		
9	EQ High Gain	-12–+12dB	52–76			
10	Dry/Wet	D63>W – D=W – D<W63	1–127			●
11	Stage	6–10 (variation block)	6–10			
12	Diffusion	mono/stereo	0–1			
13						
14						
15						
16						

PHASER 2 (variation block)

No.	Parameter	Display	Value	See Table	Comment	Control
1	LFO Frequency	0.00Hz–39.7Hz	0–127	table#1		
2	LFO Depth	0–127	0–127			
3	Phase Shift Offset	0–127	0–127			
4	Feedback Level	-63–+63	1–127			
5						
6	EQ Low Frequency	50Hz–2.0kHz	8–40	table#3		
7	EQ Low Gain	-12–+12dB	52–76			
8	EQ High Frequency	500Hz–16.0kHz	28–58	table#3		
9	EQ High Gain	-12–+12dB	52–76			
10	Dry/Wet	D63>W – D=W – D<W63	1–127			●
11	Stage	3,4,5	3–5			
12						
13	LFO Phase Difference	-180deg–+180deg (resolution=3deg.)	4–124			
14						
15						
16						

DISTORTION
OVERDRIVE (variation, insertion block)

No.	Parameter	Display	Value	See Table	Comment	Control
1	Drive	0–127	0–127			●
2	EQ Low Frequency	50Hz–2.0kHz	8–40	table#3		
3	EQ Low Gain	-12–+12dB	52–76			
4	LPF Cutoff	1.0k–Thru	34–60	table#3		
5	Output Level	0–127	0–127			
6						
7	EQ Mid Frequency	500Hz–10.0kHz	28–54	table#3		
8	EQ Mid Gain	-12–+12dB	52–76			
9	EQ Mid Width	1.0–12.0	10–120			
10	Dry/Wet	D63>W – D=W – D<W63	1–127			
11	Edge(Clip Curve)	0–127	0–127	mild–sharp		
12						
13						
14						
15						
16						

COMP+DIST (variation block)

No.	Parameter	Display	Value	See Table	Comment	Control
1	Drive	0–127	0–127			●
2	EQ Low Frequency	32Hz–2.0kHz	4–40	table#3		
3	EQ Low Gain	-12–+12dB	52–76			
4	LPF Cutoff	1.0k–Thru	34–60	table#3		
5	Output Level	0–127	0–127			
6						
7	EQ Mid Frequency	100Hz–10.0kHz	14–54	table#3		
8	EQ Mid Gain	-12–+12dB	52–76			
9	EQ Mid Width	1.0–12.0	10–120			
10	Dry/Wet	D63>W – D=W – D<W63	1–127			
11	Edge(Clip Curve)	0–127	0–127	mild–sharp		
12	Attack	1ms–40ms	0–19	table#8		
13	Release	10ms–680ms	0–15	table#9		
14	Threshold	-48dB– -6dB	79–121			
15	Ratio	1.0–20.0	0–7	table#10		
16						

AMP SIMULATOR (variation, insertion block)

No.	Parameter	Display	Value	See Table	Comment	Control
1	Drive	0–127	0–127			●
2	AMP Type	Off,Stack,Combo,Tube	0–3			
3	LPF Cutoff	1.0k–Thru	34–60	table#3		
4	Output Level	0–127	0–127			
5						
6						
7						
8						
9						
10	Dry/Wet	D63>W – D=W – D<W63	1–127			
11	Edge(Clip Curve)	0–127	0–127	mild–sharp		
12						
13						
14						
15						
16						

3BAND EQ(MONO) (variation, insertion block)

No.	Parameter	Display	Value	See Table	Comment	Control
1	EQ Low Gain	-12–+12dB	52–76			
2	EQ Mid Frequency	500Hz–10.0kHz	28–54	table#3		
3	EQ Mid Gain	-12–+12dB	52–76			
4	EQ Mid Width	1.0–12.0	10–120			
5	EQ High Gain	-12–+12dB	52–76			
6	EQ Low Frequency	50Hz–2.0kHz	8–40	table#3		
7	EQ High Frequency	500Hz–16.0kHz	28–58	table#3		
8						
9						
10						
11						
12						
13						
14						
15	Input Mode	mono/stereo	0–1			
16						

2BAND EQ(STEREO) (variation, insertion block)

No.	Parameter	Display	Value	See Table	Comment	Control
1	EQ Low Frequency	50Hz–2.0kHz	8–40	table#3		
2	EQ Low Gain	-12–+12dB	52–76			
3	EQ High Frequency	500Hz–16.0kHz	28–58	table#3		
4	EQ High Gain	-12–+12dB	52–76			
5						
6						
7						
8						
9						
10						
11						
12						
13						
14						
15						
16						

AUTO WAH (variation, insertion block)

No.	Parameter	Display	Value	See Table	Comment	Control
1	LFO Frequency	0.00Hz–39.7Hz	0–127	table#1		
2	LFO Depth	0–127	0–127			
3	Cutoff Frequency Offset	0–127	0–127		●	
4	Resonance	1.0–12.0	10–120			
5						
6	EQ Low Frequency	50Hz–2.0kHz	8–40	table#3		
7	EQ Low Gain	-12–+12dB	52–76			
8	EQ High Frequency	500Hz–16.0kHz	28–58	table#3		
9	EQ High Gain	-12–+12dB	52–76			
10	Dry/Wet	D63>W – D=W – D<W63	1–127			
11	Drive	0–127(variation block)	0–127			
12						
13						
14						
15						
16						

AUTO WAH+DIST
AUTO WHA+ODRV (variation block)

No.	Parameter	Display	Value	See Table	Comment	Control
1	LFO Frequency	0.00Hz–39.7Hz	0–127	table#1		
2	LFO Depth	0–127	0–127			
3	Cutoff Frequency Offset	0–127	0–127		•	
4	Resonance	1.0–12.0	10–120			
5						
6	EQ Low Frequency	32Hz–2.0kHz	4–40	table#3		
7	EQ Low Gain	-12–+12dB	52–76			
8	EQ High Frequency	500Hz–16.0kHz	28–58	table#3		
9	EQ High Gain	-12–+12dB	52–76			
10	Dry/Wet	D63>W – D=W – D<W63	1–127			
11	Drive	0–127	0–127			
12	EQ Low Gain (distortion)		-12–+12dB	52–76		
13	EQ Mid Gain (distortion)		-12–+12dB	52–76		
14	LPF Cutoff	1.0kHz–thru	34–60	table#3		
15	Output Level	0–127	0–127			
16						

TOUCH WAH 1 (variation, insertion block)
TOUCH WAH+DIST (variation block)

No.	Parameter	Display	Value	See Table	Comment	Control
1	Sensitive	0–127	0–127			
2	Cutoff Frequency Offset	0–127	0–127		•	
3	Resonance	1.0–12.0	10–120			
4						
5						
6	EQ Low Frequency	32Hz–2.0kHz	4–40	table#3		
7	EQ Low Gain	-12–+12dB	52–76			
8	EQ High Frequency	500Hz–16.0kHz	28–58	table#3		
9	EQ High Gain	-12–+12dB	52–76			
10	Dry/Wet	D63>W – D=W – D<W63	1–127			
11	Drive	0–127(variation block)	0–127			
12						
13						
14						
15						
16						

TOUCH WAH 2 (variation, insertion block)
TOUCH WAH+ODRV (variation block)

No.	Parameter	Display	Value	See Table	Comment	Control
1	Sensitive	0–127	0–127			
2	Cutoff Frequency Offset	0–127	0–127		•	
3	Resonance	1.0–12.0	10–120			
4						
5						
6	EQ Low Frequency	32Hz–2.0kHz	4–40	table#3		
7	EQ Low Gain	-12–+12dB	52–76			
8	EQ High Frequency	500Hz–16.0kHz	28–58	table#3		
9	EQ High Gain	-12–+12dB	52–76			
10	Dry/Wet	D63>W – D=W – D<W63	1–127			
11	Drive	0–127(variation block)	0–127			
12	EQ Low Gain (distortion)	-12–+12dB(variation block)	52–76			
13	EQ Mid Gain (distortion)	-12–+12dB(variation block)	52–76			
14	LPF Cutoff	1.0kHz–thru(variation block)	34–60	table#3		
15	Output Level	0–127(variation block)	0–127			
16	Release	10–680ms	52–67			

PITCH CHANGE 1 (variation block)

No.	Parameter	Display	Value	See Table	Comment	Control
1	Pitch	-24–+24	40–88			
2	Initial Delay	0.1mS–400.0mS	0–127	table#7		
3	Fine 1	-50–+50	14–114			
4	Fine 2	-50–+50	14–114			
5	Feedback Level	-63–+63	1–127			
6						
7						
8						
9						
10	Dry/Wet	D63>W – D=W – D<W63	1–127			•
11	Pan 1	L63–R63	1–127			
12	Output Level 1	0–127	0–127			
13	Pan 2	L63–R63	1–127			
14	Output Level 2	0–127	0–127			
15						
16						

PITCH CHANGE 2 (variation block)

No.	Parameter	Display	Value	See Table	Comment	Control
1	Pitch	-24–+24	40–88			
2	Initial Delay	0.1mS–400.0mS	0–127	table#7		
3	Fine 1	-50–+50cent	14–114			
4	Fine 2	-50–+50cent	14–114			
5	Feedback Level	-63–+63	1–127			
6						
7						
8						
9						
10	Dry/Wet	D63>W – D=W – D<W63	1–127			•
11	Pan 1	L63–R63	1–127			
12	Output Level 1	0–127	0–127			
13	Pan 2	L63–R63	1–127			
14	Output Level 2	0–127	0–127			
15						
16						

COMPRESSOR (variation, insertion block)

No.	Parameter	Display	Value	See Table	Comment	Control
1	Attack	1–40ms	0–19	table#8		
2	Release	10–680ms	0–15	table#9		
3	Threshold	-48– -6dB	79–121			
4	Ratio	1.0–20.0	0–7	table#10		
5	Output Level	0–127	0–127			
6						
7						
8						
9						
10						
11						
12						
13						
14						
15						
16						

NOISE GATE (variation, insertion block)

No.	Parameter	Display	Value	See Table	Comment	Control
1	Attack	1–40ms	0–19	table#8		
2	Release	10–680ms	0–15	table#9		
3	Threshold	-72– -30dB	55–97			
4	Output Level	0–127	0–127			
5						
6						
7						
8						
9						
10						
11						
12						
13						
14						
15						
16						

VOICE CANCEL (variation block)

No.	Parameter	Display	Value	See Table	Comment	Control
1						
2						
3						
4						
5						
6						
7						
8						
9						
10						
11	Low Adjust	0–26	0–26			
12	High Adjust	0–26	0–26			
13						
14						
15						
16						

NO EFFECT (reverb, chorus, variation block)
THRU (variation, insertion block)

No.	Parameter	Display	Value	See Table	Comment	Control
1						
2						
3						
4						
5						
6						
7						
8						
9						
10						
11						
12						
13						
14						
15						
16						

HARMONIC ENHANCER (variation block)

No.	Parameter	Display	Value	See Table	Comment	Control
1	HPF Cutoff	500Hz–16kHz	28–58	table#3		
2	Drive	0–127	0–127			
3	Mix Level	0–127	0–127			
4						
5						
6						
7						
8						
9						
10						
11						
12						
13						
14						
15						
16						

TALKING MODULATION (variation block)

No.	Parameter	Display	Value	See Table	Comment	Control
1	Vowel	a,i,u,e,o	0–4			
2	Move speed	1–62	1–62			
3	Drive	0–127	0–127			
4	Output Level	0–127	0–127			
5						
6						
7						
8						
9						
10						
11						
12						
13						
14						
15						
16						

LO-FI (variation block)

No.	Parameter	Display	Value	See Table	Comment	Control
1	Sampling Freq Control	a,i,u,e,o	0–4			
2	Word Length	1–62	1–62			
3	Output Gain	0–127	0–127			
4	LPF Cutoff	0–127	0–127			
5	Filter Type	Thru,PowerBass,Radio,Tel, Clean,Low	0–5			
6	LPF Resonanc	1.0–12.0	10–120			
7	Bit Assign	0–6	0–6			
8	Emphasis	Off/On	0–1			
9						
10	Dry/Wet	D63>W – D=W – D<W63	1–127			•
11						
12						
13						
14						
15	Input Mode	mono/stereo				
16						

DIST+DELAY (variation block)
OVERDRIVE+DELAY (variation block)

No.	Parameter	Display	Value	See Table	Comment	Control
1	Lch Delay Time	0.1–1486.0ms	1–14860			
2	Rch Delay Time	0.1–1486.0ms	1–14860			
3	Delay Feedback Time	0.1–1486.0ms	1–14860			
4	Delay Feedback Level	-63–+63	1–127			
5	Delay Mix	0–127	0–127			
6	Dist Drive	0–127	0–127			
7	Dist Output Level	0–127	0–127			
8	Dist EQ Low Gain	-12–+12dB	52–76			
9	Dist EQ Mid Gain	-12–+12dB	52–76			
10	Dry/Wet	D63>W – D=W – D<W63	1–127			•
11						
12						
13						
14						
15						
16						

COMP+DIST+DELAY (variation block)
COMP+OVERDRIVE+DELAY (variation block)

No.	Parameter	Display	Value	See Table	Comment	Control
1	Delay Time	0.1–1486.0ms	1–14860			
2	Delay Feedback Level	-63–+63	1–127			
3	Delay Mix	0–127	0–127			
4	Dist Drive	0–127	0–127			
5	Dist Output Level	0–127	0–127			
6	Dist EQ Low Gain	-12–+12dB	52–76			
7	Dist EQ Mid Gain	-12–+12dB	52–76			
8						
9						
10	Dry/Wet	D63>W – D=W – D<W63	1–127			•
11	Comp. Attack	1ms–40ms	0–19	table#8		
12	Comp. Release	10ms–680ms	0–15	table#9		
13	Comp. Threshold	-48dB– -6dB	79–121			
14	Comp. Ratio	1.0–20.0	0–7	table#10		
15						
16						

WAH+DIST+DELAY (variation block)
WAH+OVERDRIVE+DELAY (variation block)

No.	Parameter	Display	Value	See Table	Comment	Control
1	Delay Time	0.1–1486.0ms	1–14860			
2	Delay Feedback Level	-63–+63	1–127			
3	Delay Mix	0–127	0–127			
4	Dist Drive	0–127	0–127			
5	Dist Output Level	0–127	0–127			
6	Dist EQ Low Gain	-12–+12dB	52–76			
7	Dist EQ Mid Gain	-12–+12dB	52–76			
8						
9						
10	Dry/Wet	D63>W – D=W – D<W63	1–127			•
11	Wah Sensitive	0–127	0–127			
12	Wah Cutoff Freq Offset	0–127	0–127			
13	Wah Resonance	1.0–12.0	10–120			
14	Wah Release	10–680ms	52–67			
15						
16						

Note: Parameter 10 (Dry/Wet) can only be set for insertion type effects.

VOCAL HARMONY MIDI SPECIFICATIONS

Channel message

			Harmony ch	Melody ch
1) Note on / off				
9n kk vv	note on message		○	○
	Specifies pitch in the Vocoder mode.			
	Velocity not recognized.			
	Also used as Gender Threshold source for the Melody channel.			
8n kk vv	note off message		○	○
	Turns the current note off in the Vocoder mode.			
9n kk 00				
	Also used as Gender Threshold source for the Melody channel.			
2) Control change				
Bn 40 vv	damper pedal		○	○
64	RPN		○	○
65	RPN		○	○
62	NRPN		○	○
63	NRPN		○	○
06	Data entry MSB		○	○
64	Data Increment		○	○
26	Data Decrement		○	○
7B	All note off		○	○
3) RPN				
MSB LSB				
00 00	Pitch bend sensitivity		○	○
7F 7F	NULL		○	○
4) NRPN				
MSB LSB				
00 00	Harmony mute		○	×
01 08	Vibrato rate modulation		○	○
01 09	Vibrato depth modulation		○	○
01 0A	Vibrato delay modulation		○	○
01 1A	Detune modulation		○	×
	Controls the overall amount of detune.			
02 10	Harmony 1 volume		○	×
02 11	Harmony 2 volume		○	×
02 20	Harmony 1 pan		○	×
02 21	Harmony 2 pan		○	×
02 30	Harmony 1 detune		○	×
02 31	Harmony 2 detune		○	×
03 00	Lead gender type		×	○
03 01	Lead gender amount		×	○
5) Pitch bend				
E0 nn nn			○	○
	Only effective when melody channel Lead Gender ON.			

<Table 1-9 > Effect Data Value Assign Table

Table#1
LFO Frequency

Data	Value	Data	Value	Data	Value	Data	Value
0	0.00	32	1.35	64	2.69	96	8.41
1	0.04	33	1.39	65	2.78	97	8.75
2	0.08	34	1.43	66	2.86	98	9.08
3	0.13	35	1.47	67	2.94	99	9.42
4	0.17	36	1.51	68	3.03	100	9.76
5	0.21	37	1.56	69	3.11	101	10.1
6	0.25	38	1.60	70	3.20	102	10.8
7	0.29	39	1.64	71	3.28	103	11.4
8	0.34	40	1.68	72	3.37	104	12.1
9	0.38	41	1.72	73	3.45	105	12.8
10	0.42	42	1.77	74	3.53	106	13.5
11	0.46	43	1.81	75	3.62	107	14.1
12	0.51	44	1.85	76	3.70	108	14.8
13	0.55	45	1.89	77	3.87	109	15.5
14	0.59	46	1.94	78	4.04	110	16.2
15	0.63	47	1.98	79	4.21	111	16.8
16	0.67	48	2.02	80	4.37	112	17.5
17	0.72	49	2.06	81	4.54	113	18.2
18	0.76	50	2.10	82	4.71	114	19.5
19	0.80	51	2.15	83	4.88	115	20.9
20	0.84	52	2.19	84	5.05	116	22.2
21	0.88	53	2.23	85	5.22	117	23.6
22	0.93	54	2.27	86	5.38	118	24.9
23	0.97	55	2.31	87	5.55	119	26.2
24	1.01	56	2.36	88	5.72	120	27.6
25	1.05	57	2.40	89	6.06	121	28.9
26	1.09	58	2.44	90	6.39	122	30.3
27	1.14	59	2.48	91	6.73	123	31.6
28	1.18	60	2.52	92	7.07	124	33.0
29	1.22	61	2.57	93	7.40	125	34.3
30	1.26	62	2.61	94	7.74	126	37.0
31	1.30	63	2.65	95	8.08	127	39.7

Table#2
Modulation Delay Offset

Data	Value	Data	Value	Data	Value	Data	Value
0	0.0	32	3.2	64	6.4	96	9.6
1	0.1	33	3.3	65	6.5	97	9.7
2	0.2	34	3.4	66	6.6	98	9.8
3	0.3	35	3.5	67	6.7	99	9.9
4	0.4	36	3.6	68	6.8	100	10.0
5	0.5	37	3.7	69	6.9	101	11.1
6	0.6	38	3.8	70	7.0	102	12.2
7	0.7	39	3.9	71	7.1	103	13.3
8	0.8	40	4.0	72	7.2	104	14.4
9	0.9	41	4.1	73	7.3	105	15.5
10	1.0	42	4.2	74	7.4	106	17.1
11	1.1	43	4.3	75	7.5	107	18.6
12	1.2	44	4.4	76	7.6	108	20.2
13	1.3	45	4.5	77	7.7	109	21.8
14	1.4	46	4.6	78	7.8	110	23.3
15	1.5	47	4.7	79	7.9	111	24.9
16	1.6	48	4.8	80	8.0	112	26.5
17	1.7	49	4.9	81	8.1	113	28.0
18	1.8	50	5.0	82	8.2	114	29.6
19	1.9	51	5.1	83	8.3	115	31.2
20	2.0	52	5.2	84	8.4	116	32.8
21	2.1	53	5.3	85	8.5	117	34.3
22	2.2	54	5.4	86	8.6	118	35.9
23	2.3	55	5.5	87	8.7	119	37.5
24	2.4	56	5.6	88	8.8	120	39.0
25	2.5	57	5.7	89	8.9	121	40.6
26	2.6	58	5.8	90	9.0	122	42.2
27	2.7	59	5.9	91	9.1	123	43.7
28	2.8	60	6.0	92	9.2	124	45.3
29	2.9	61	6.1	93	9.3	125	46.9
30	3.0	62	6.2	94	9.4	126	48.4
31	3.1	63	6.3	95	9.5	127	50.0

Table#3
EQ Frequency

Data	Value	Data	Value
0	THRU(0)	32	800
1	22	33	900
2	25	34	1.0k
3	28	35	1.1k
4	32	36	1.2k
5	36	37	1.4k
6	40	38	1.6k
7	45	39	1.8k
8	50	40	2.0k
9	56	41	2.2k
10	63	42	2.5k
11	70	43	2.8k
12	80	44	3.2k
13	90	45	3.6k
14	100	46	4.0k
15	110	47	4.5k
16	125	48	5.0k
17	140	49	5.6k
18	160	50	6.3k
19	180	51	7.0k
20	200	52	8.0k
21	225	53	9.0k
22	250	54	10.0k
23	280	55	11.0k
24	315	56	12.0k
25	355	57	14.0k
26	400	58	16.0k
27	450	59	18.0k
28	500	60	THRU(20.0k)
29	560		
30	630		
31	700		

Table#4
Reverb time

Data	Value	Data	Value	Data	Value
0	0.3	32	3.5	64	17.0
1	0.4	33	3.6	65	18.0
2	0.5	34	3.7	66	19.0
3	0.6	35	3.8	67	20.0
4	0.7	36	3.9	68	25.0
5	0.8	37	4.0	69	30.0
6	0.9	38	4.1		
7	1.0	39	4.2		
8	1.1	40	4.3		
9	1.2	41	4.4		
10	1.3	42	4.5		
11	1.4	43	4.6		
12	1.5	44	4.7		
13	1.6	45	4.8		
14	1.7	46	4.9		
15	1.8	47	5.0		
16	1.9	48	5.5		
17	2.0	49	6.0		
18	2.1	50	6.5		
19	2.2	51	7.0		
20	2.3	52	7.5		
21	2.4	53	8.0		
22	2.5	54	8.5		
23	2.6	55	9.0		
24	2.7	56	9.5		
25	2.8	57	10.0		
26	2.9	58	11.0		
27	3.0	59	12.0		
28	3.1	60	13.0		
29	3.2	61	14.0		
30	3.3	62	15.0		
31	3.4	63	16.0		

Table#5
Delay Time(200.0ms)

Data	Value	Data	Value	Data	Value	Data	Value
0	0.1	32	50.5	64	100.8	96	151.2
1	1.7	33	52.0	65	102.4	97	152.8
2	3.2	34	53.6	66	104.0	98	154.4
3	4.8	35	55.2	67	105.6	99	155.9
4	6.4	36	56.8	68	107.1	100	157.5
5	8.0	37	58.3	69	108.7	101	159.1
6	9.5	38	59.9	70	110.3	102	160.6
7	11.1	39	61.5	71	111.9	103	162.2
8	12.7	40	63.1	72	113.4	104	163.8
9	14.3	41	64.6	73	115.0	105	165.4
10	15.8	42	66.2	74	116.6	106	166.9
11	17.4	43	67.8	75	118.2	107	168.5
12	19.0	44	69.4	76	119.7	108	170.1
13	20.6	45	70.9	77	121.3	109	171.7
14	22.1	46	72.5	78	122.9	110	173.2
15	23.7	47	74.1	79	124.4	111	174.8
16	25.3	48	75.7	80	126.0	112	176.4
17	26.9	49	77.2	81	127.6	113	178.0
18	28.4	50	78.8	82	129.2	114	179.5
19	30.0	51	80.4	83	130.7	115	181.1
20	31.6	52	81.9	84	132.3	116	182.7
21	33.2	53	83.5	85	133.9	117	184.3
22	34.7	54	85.1	86	135.5	118	185.8
23	36.3	55	86.7	87	137.0	119	187.4
24	37.9	56	88.2	88	138.6	120	189.0
25	39.5	57	89.8	89	140.2	121	190.6
26	41.0	58	91.4	90	141.8	122	192.1
27	42.6	59	93.0	91	143.3	123	193.7
28	44.2	60	94.5	92	144.9	124	195.3
29	45.7	61	96.1	93	146.5	125	196.9
30	47.3	62	97.7	94	148.1	126	198.4
31	48.9	63	99.3	95	149.6	127	200.0

Table#6
Room Size

Data	Value	Data	Value	Data	Value	Data	Value
0	0.1	32	5.1	64	10.1	96	15.1
1	0.3	33	5.3	65	10.3	97	15.3
2	0.4	34	5.4	66	10.4	98	15.5
3	0.6	35	5.6	67	10.6	99	15.6
4	0.7	36	5.7	68	10.8	100	15.8
5	0.9	37	5.9	69	10.9	101	15.9
6	1.0	38	6.1	70	11.1	102	16.1
7	1.2	39	6.2	71	11.2	103	16.2
8	1.4	40	6.4	72	11.4	104	16.4
9	1.5	41	6.5	73	11.5	105	16.6
10	1.7	42	6.7	74	11.7	106	16.7
11	1.8	43	6.8	75	11.9	107	16.9
12	2.0	44	7.0	76	12.0	108	17.0
13	2.1	45	7.2	77	12.2	109	17.2
14	2.3	46	7.3	78	12.3	110	17.3
15	2.5	47	7.5	79	12.5	111	17.5
16	2.6	48	7.6	80	12.6	112	17.6
17	2.8	49	7.8	81	12.8	113	17.8
18	2.9	50	7.9	82	12.9	114	18.0
19	3.1	51	8.1	83	13.1	115	18.1
20	3.2	52	8.2	84	13.3	116	18.3
21	3.4	53	8.4	85	13.4	117	18.4
22	3.5	54	8.6	86	13.6	118	18.6
23	3.7	55	8.7	87	13.7	119	18.7
24	3.9	56	8.9	88	13.9	120	18.9
25	4.0	57	9.0	89	14.0	121	19.1
26	4.2	58	9.2	90	14.2	122	19.2
27	4.3	59	9.3	91	14.4	123	19.4
28	4.5	60	9.5	92	14.5	124	19.5
29	4.6	61	9.7	93	14.7	125	19.7
30	4.8	62	9.8	94	14.8	126	19.8
31	5.0	63	10.0	95	15.0	127	20.0

Table#7
Delay Time(400.0ms)

Data	Value	Data	Value	Data	Value	Data	Value
0	0.1	32	100.9	64	201.6	96	302.4
1	3.2	33	104.0	65	204.8	97	305.5
2	6.4	34	107.2	66	207.9	98	308.7
3	9.5	35	110.3	67	211.1	99	311.8
4	12.7	36	113.5	68	214.2	100	315.0
5	15.8	37	116.6	69	217.4	101	318.1
6	19.0	38	119.8	70	220.5	102	321.3
7	22.1	39	122.9	71	223.7	103	324.4
8	25.3	40	126.1	72	226.8	104	327.6
9	28.4	41	129.2	73	230.0	105	330.7
10	31.6	42	132.4	74	233.1	106	333.9
11	34.7	43	135.5	75	236.3	107	337.0
12	37.9	44	138.6	76	239.4	108	340.2
13	41.0	45	141.8	77	242.6	109	343.3
14	44.2	46	144.9	78	245.7	110	346.5
15	47.3	47	148.1	79	248.9	111	349.6
16	50.5	48	151.2	80	252.0	112	352.8
17	53.6	49	154.4	81	255.2	113	355.9
18	56.8	50	157.5	82	258.3	114	359.1
19	59.9	51	160.7	83	261.5	115	362.2
20	63.1	52	163.8	84	264.6	116	365.4
21	66.2	53	167.0	85	267.7	117	368.5
22	69.4	54	170.1	86	270.9	118	371.7
23	72.5	55	173.3	87	274.0	119	374.8
24	75.7	56	176.4	88	277.2	120	378.0
25	78.8	57	179.6	89	280.3	121	381.1
26	82.0	58	182.7	90	283.5	122	384.3
27	85.1	59	185.9	91	286.6	123	387.4
28	88.3	60	189.0	92	289.8	124	390.6
29	91.4	61	192.2	93	292.9	125	393.7
30	94.6	62	195.3	94	296.1	126	396.9
31	97.7	63	198.5	95	299.2	127	400.0

Table#8
Compressor Attack Time

Data	Value
0	1
1	2
2	3
3	4
4	5
5	6
6	7
7	8
8	9
9	10
10	12
11	14
12	16
13	18
14	20
15	23
16	26
17	30
18	35
19	40

Table#9
Compressor Release Time

Data	Value
0	10
1	15
2	25
3	35
4	45
5	55
6	65
7	75
8	85
9	100
10	115
11	140
12	170
13	230
14	340
15	680

Table#10
Compressor Ratio

Data	Value
0	1.0
1	1.5
2	2.0
3	3.0
4	5.0
5	7.0
6	10.0
7	20.0

Table#11
Reverb Width;Depth;Height

Data	Value	Data	Value	Data	Value	Data	Value
0	0.5	32	8.8	64	17.6	96	27.5
1	0.8	33	9.1	65	17.9	97	27.8
2	1.0	34	9.4	66	18.2	98	28.1
3	1.3	35	9.6	67	18.5	99	28.5
4	1.5	36	9.9	68	18.8	100	28.8
5	1.8	37	10.2	69	19.1	101	29.2
6	2.0	38	10.4	70	19.4	102	29.5
7	2.3	39	10.7	71	19.7	103	29.9
8	2.6	40	11.0	72	20.0	104	30.2
9	2.8	41	11.2	73	20.2		
10	3.1	42	11.5	74	20.5		
11	3.3	43	11.8	75	20.8		
12	3.6	44	12.1	76	21.1		
13	3.9	45	12.3	77	21.4		
14	4.1	46	12.6	78	21.7		
15	4.4	47	12.9	79	22.0		
16	4.6	48	13.1	80	22.4		
17	4.9	49	13.4	81	22.7		
18	5.2	50	13.7	82	23.0		
19	5.4	51	14.0	83	23.3		
20	5.7	52	14.2	84	23.6		
21	5.9	53	14.5	85	23.9		
22	6.2	54	14.8	86	24.2		
23	6.5	55	15.1	87	24.5		
24	6.7	56	15.4	88	24.9		
25	7.0	57	15.6	89	25.2		
26	7.2	58	15.9	90	25.5		
27	7.5	59	16.2	91	25.8		
28	7.8	60	16.5	92	26.1		
29	8.0	61	16.8	93	26.5		
30	8.3	62	17.1	94	26.8		
31	8.6	63	17.3	95	27.1		

Clavinova®

CVP-103/CVP-103M

PARTS LIST

CONTENTS

OVERALL ASSEMBLY ····· 2
MAIN UNIT 1/2 ····· 3
MAIN UNIT 2/2 ····· 5
UPPER UNIT&FRONT RAIL ASSEMBLY···· 6
TOPBOARD ASSEMBLY····· 7
CONTROL PANEL ASSEMBLY····· 8
MUSIC REST ASSEMBLY····· 10
KEY COVER ASSEMBLY····· 10
SIDE COVER ASSEMBLY (L, R)····· 11
END BLOCK ASSEMBLY (L, R)
&POWER SWITCH ASSEMBLY····· 12
HEADPHONES JACK UNIT ····· 13
FDD ASSEMBLY ····· 13
MA60 ASSEMBLY····· 14
FU60 ASSEMBLY ····· 15
KEYBOARD ASSEMBLY ····· 16
SIDE BOARD ASSEMBLY (L, R)····· 18
PEDAL BOX ASSEMBLY ····· 19
PEDAL ASSEMBLY ····· 20
BENCH ····· 21
BENCH ····· 22
ELECTRICAL PARTS····· 23~37

Notes : DESTINATION ABBREVIATIONS

A : Australian model	M : South African model
B : British model	O : Chinese model
C : Canadian model	Q : South-east Asia model
D : German model	T : Taiwan model
E : European model	U : U.S.A. model
F : French model	V : General export model (110V)
H : North European model	W : General export model (220V)
I : Indonesian model	N,X : General export model
J : Japanese model	Y : Export model

WARNING

Components having special characteristics are marked ⚠ and must be replaced with parts having specification equal to those originally installed.

- The numbers in " QTY " show quantities for each unit.
- The parts with " **- -** " in " PART NO. " are not available as spare parts.
- The mark " } " in the remarks column indicates that these parts are interchangeable.
- The second letter of the shaded ( ) part number is O, not zero.
- The second letter of the shaded ( ) part number is I, not one.

OVERALL ASSEMBLY

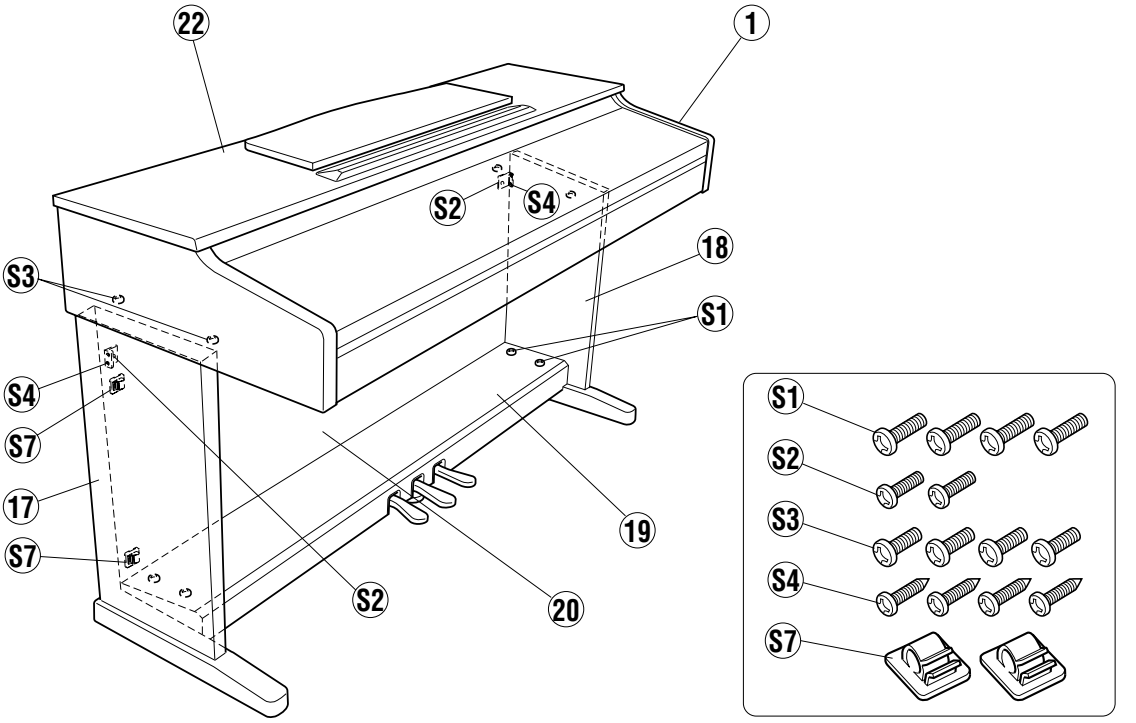

	REF NO.	PART NO.	DESCRIPTION			REMARKS		QTY	RANK
			OVERALL ASSEMBLY			CVP-103/103M			
	1	- -	Main Unit			CVP-103 J	(V323520)		
	1	- -	Main Unit			CVP-103 U	(V323530)		
	1	- -	Main Unit			CVP-103 B	(V323540)		
	1	- -	Main Unit			CVP-103 E	(V323550)		
	1	- -	Main Unit			CVP-103 N	(V323560)		
	1	- -	Main Unit			CVP-103M U	(V330500)		
	1	- -	Main Unit			CVP-103M B	(V330510)		
	1	- -	Main Unit			CVP-103M E	(V330520)		
	17	- -	Side Board & Stand Base	LEFT		CVP-103	(V320280)		
	17	- -	Side Board & Stand Base	LEFT		CVP-103M	(V330680)		
	18	- -	Side Board & Stand Base	RIGHT		CVP-103	(V320290)		
	18	- -	Side Board & Stand Base	RIGHT		CVP-103M	(V330690)		
	19	- -	Pedal Box Assembly			CVP-103	(V320250)		
	19	- -	Pedal Box Assembly			CVP-103M	(V330700)		
*	20	**V3229800**	Back Board Set						
			ACCESSORIES			CVP-103/103M			
⚠		**VT015700**	AC Cord Set	2P 2.5m 7A		CVP-103 J			05
⚠		**VT015800**	AC Cord Set	2P 2.44m 7A		U			06
⚠		**VT016000**	AC Cord Set	2P 2.5m		B			08
⚠		**VT015900**	AC Cord Set	2P 2.5m 2.5A		E,N			05
		V2289900	Floppy Disk	3.50 inch 2000K					03
*		**V3236500**	Floppy Disk	3.50 inch		CVP-103 J			04
*		**V3239900**	Floppy Disk	3.50 inch					04
		VT044200	Headphone	P402416N2410		CVP-103 J			09
		- -	Bench	CL BC-15		CVP-103 J	(VU42180)		
		- -	Bench	CL YMMA		CVP-103 U,N	(V324000)		
		- -	Bench	CL BC-15 B (U)		CVP-103M U	(V250940)		
		VK726100	Connector	CCT5902		N			03
		VV685400	Screw Set						04
*		**VZ176100**	Back Toe Set			U			
		VV685400	SCREW SET						04
	S1	**VU711900**	Truss Head Screw	6.0X20	MFZN2BL			4	01
	S2	**VP367300**	Truss Head Screw	4.0X12	MFZN2BL			2	01
	S3	**EG360020**	Bind Head Screw	6.0X16	MFZN2BL			4	01
	S4	**VR321000**	PW Head Tapping Screw-1	4.0X20	MFZN2BL			4	01
	S7	**VR410300**	Cord Clamp Set						03

*:New Parts

RANK:Japan only

■ MAIN UNIT 1/2

• **Bottom view**

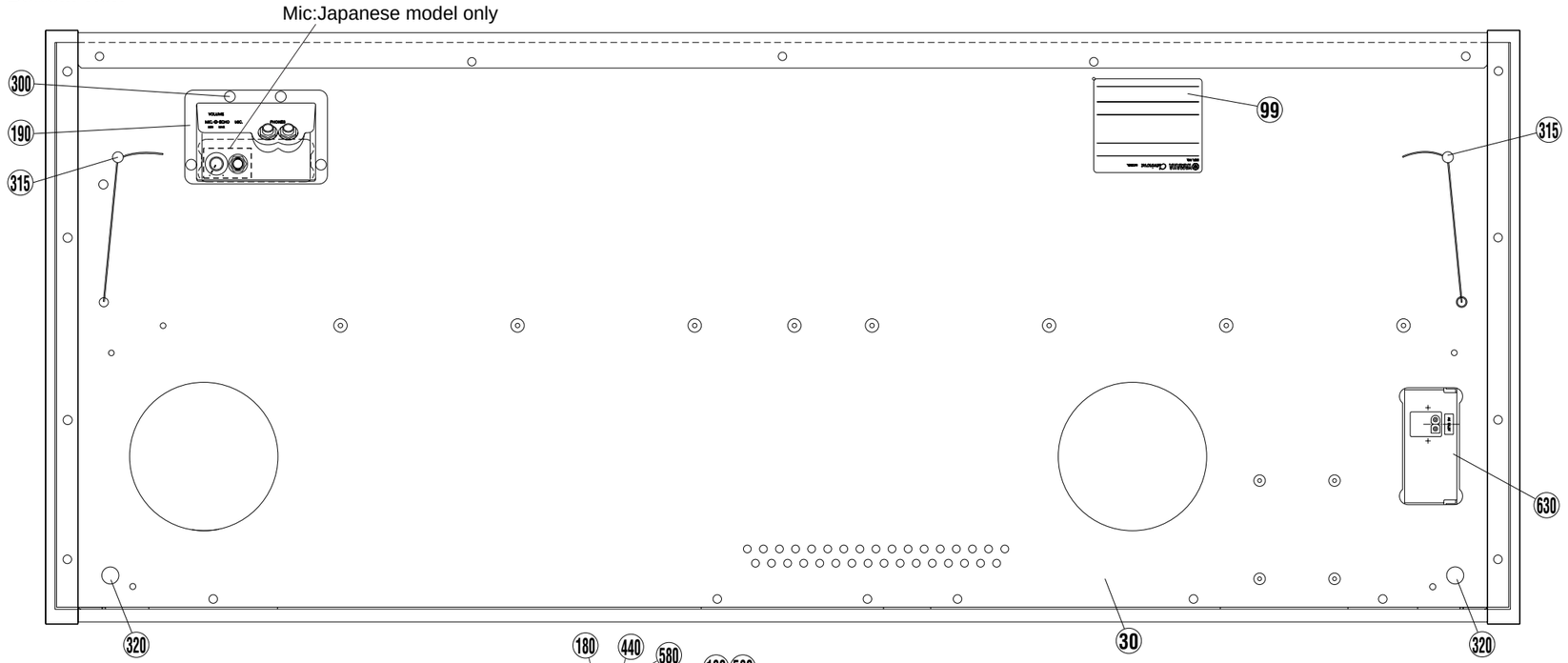

Power transformer (U.S. model)

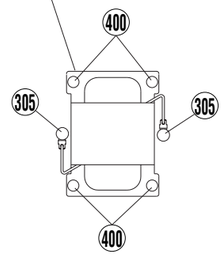

• **Top view**

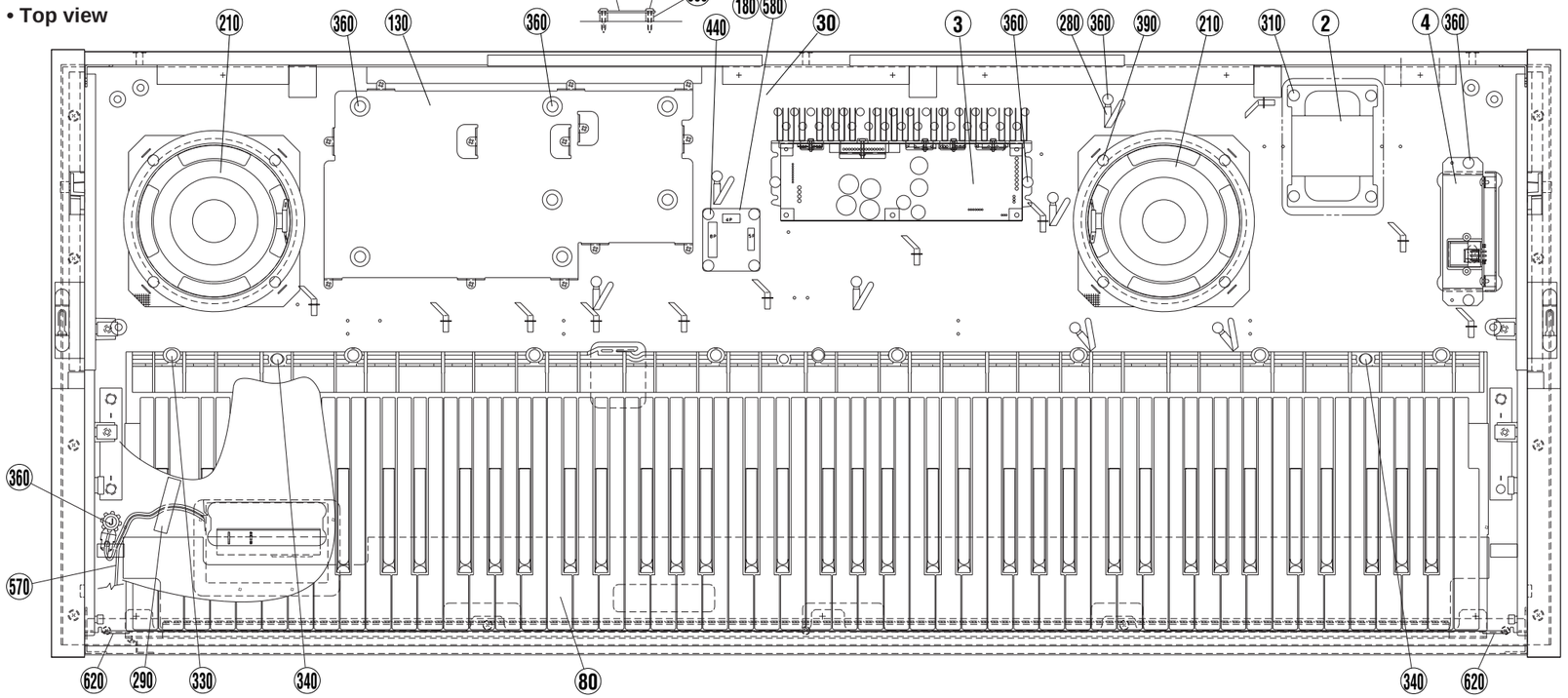

• **Side view**

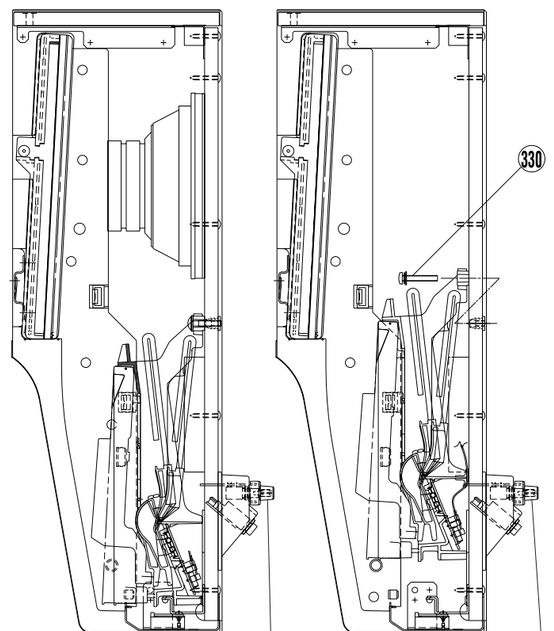

	REF NO.	PART NO.	DESCRIPTION			REMARKS		QTY	RANK
			MAIN UNIT			CVP-103/103M			
		--	Main Unit			CVP-103 J	(V323520)		
		--	Main Unit			CVP-103 U	(V323530)		
		--	Main Unit			CVP-103 B	(V323540)		
		--	Main Unit			CVP-103 E	(V323550)		
		--	Main Unit			CVP-103 N	(V323560)		
		--	Main Unit			CVP-103M U	(V330500)		
		--	Main Unit			CVP-103M B	(V330510)		
		--	Main Unit			CVP-103M E	(V330520)		
*	2	XR748C00	Power Transformer	GA60J		CVP-103 J			
	2	VU908200	Power Transformer Assembly			U			17
	2	XR750B00	Power Transformer	GA60E IEC65		B,E			14
*	2	XR751C00	Power Transformer	GA60N IEC65 E		CVP-103 N			
	3	VT144300	MA60 Assembly			CVP-103 J			
	3	VT144300	MA60 Assembly			U			
	3	VT144400	MA60 Assembly			B,E			
	4	VT152000	FU60 Assembly			CVP-103 J			10
	4	VT152100	FU60 Assembly			U			10
	4	VT152200	FU60 Assembly			B,E			10
*	10	V3325100	Music Rest Assembly			CVP-103			
*	10	V3308300	Music Rest Assembly			CVP-103M			
*	20	V3252700	Top Board Assembly (Cover)	YCJ		CVP-103 J			
*	20	V3583000	Top Board Assembly	YMMA		CVP-103 U,B,N			
*	20	V3267700	Top Board Assembly (Cover)	YMMA		CVP-103 E			
*	20	V3583400	Top Board Assembly	YMMA		CVP-103M U			
*	20	V3305600	Top Board Assembly (Cover)	YMMA		CVP-103M E			
	30	--	Upper Unit			CVP-103	(V328140)		
	30	--	Upper Unit			CVP-103M	(V330840)		
	40	--	End Block Assembly	LEFT			(VV60330)		
	50	--	End Block Assembly	RIGHT			(VV60320)		
	60	--	Control Panel Assembly			CVP-103 J,B,E,N	(V326340)		
	60	--	Control Panel Assembly			CVP-103M B,E	(V326340)		
	60	--	Control Panel Assembly			U	(V326350)		
	70	--	FDD Assembly				(V328160)		
	80	VU431800	Keyboard Assembly	A88 K6					55
	95	V2191000	Cover Assembly, MA			U			07
	96	VU348800	Cover, FU			U			06
	98	VB951400	Graphic Mark	MKX-5		U			03
	99	--	Name Plate	YCJ		CVP-103 J	(V325440)		
	99	--	Name Plate	YCJ		CVP-103 U	(V325460)		
	99	--	Name Plate	YCJ		CVP-103 B,E	(V325480)		
	99	--	Name Plate	YCJ		CVP-103 N	(V325520)		
	99	--	Name Plate			CVP-103M U	(V330590)		
	99	--	Name Plate			CVP-103M B,E	(V330610)		
*	100	V3258900	Key Cover Assembly			CVP-103 J,E			
*	100	V3306700	Key Cover Assembly			CVP-103M E			
	120	VT215100	Rack Cover			J,E			03
*	130	V3282200	Angle Bracket, M						07
	140	V2035100	Jack Plate						09
*	170	V3150700	Circuit Board	JACK			(XU370D0)		
*	170a	AAX04850	Circuit Board	EQ			(XU370D0)		
*	180	V3255900	Circuit Board	NW1			(XT123B0)		
	190	VY664900	Mic. & Phones Unit	YCJ		CVP-103 J			17
	190	--	Headphones Jack Unit	YCJ		U,B,E,N	(VT47940)		
*	200	V3150900	Circuit Board	DM			(XV572B0)		
*	210	XV746A00	Speaker	16.0cm 6ohm 40W					09
	280	CB817510	Cord Binder	S-14B				7	03
	290	VP834600	Adhesive Tape	12X50				8	02
	300	EP030250	Bind Head Tapping Screw-1	3.5X14	MFZN2BL			4	01
	305	EP030340	Bind Head Tapping Screw-1	3.5X12	MFZN2BL	U		6	01
	310	ED040146	Bind Head Screw	4.0X14	MFZN2Y	J,B,E,N		4	01
	315	EP030240	Bind Head Tapping Screw-1	3.5X12	MFZN2Y			2	01
	320	VN887900	Guide Screw	6X14				2	03
	330	VV040700	Pan Head Screw	5.0X25	MFZN2Y PW			9	01
	335	EP600250	Bind Head Tapping Screw-B	3.0X8	MFZN2Y	J,E		2	01
	340	EP040236	Bind Head Tapping Screw-1	4.0X14	MFZN2Y			2	01
	350	EP600240	Bind Head Tapping Screw-B	4.0X10	MFZN2BL			4	01
	360	EP030340	Bind Head Tapping Screw-1	3.5X12	MFZN2BL			28	01
	370	EN630230	Truss Head Tapping Screw-1	3.5X14	MFZN2Y				01
	380	ED040146	Bind Head Screw	4.0X14	MFZN2Y			2	01

*:New Parts RANK:Japan only

REF NO.	PART NO.	DESCRIPTION				REMARKS	QTY	RANK
390	20338800	Truss Head Tapping Screw-1	4X20	MFZN2Y			8	01
400	VB934000	Truss Head Screw	4.0X20	MFZN2BL		U	4	01
405	EP600250	Bind Head Tapping Screw-B	3.0X8	MFZN2Y			13	01
410	EP600190	Bind Head Tapping Screw-B	3.0X8	MFZN2BL			3	01
420	VB934000	Truss Head Screw	4.0X20	MFZN2BL			3	01
430	EP030310	Bind Head Tapping Screw-1	3.0X16	MFZN2BL			4	01
440	EP030470	Bind Head Tapping Screw-1	3.5X20	MFZN2Y			4	01
490	--	Connector Assembly	7P-650			(VK11670)		
500	--	Connector Assembly				(V325840)		
500a	VD947800	Data Line Filter	ESD-R-25D-B					05
500b	CB069250	Cord Holder	BK-1					01
510	--	Connector Assembly	7P-500			(V404600)		
520	--	Connector Assembly	9P-200			(VK10280)		
530	--	Connector Assembly	SP			(V326810)		
540	--	Connector Assembly	PU			(V326110)		
550	VV652000	Connector Assembly	FDD					06
560	--	Connector Assembly	HP			(VL50740)		
570	VK105200	Connector Assembly	2P-300					03
580	CB040950	Spacer					4	03
610	--	Connector Assembly	MIC L=600			J (V337630)		
620	--	Dust Proof Cloth	22X10X0.35			(V257670)	2	
630	VT501000	Label						03

*:New Parts RANK:Japan only

■ MAIN UNIT 2/2

• Rear view

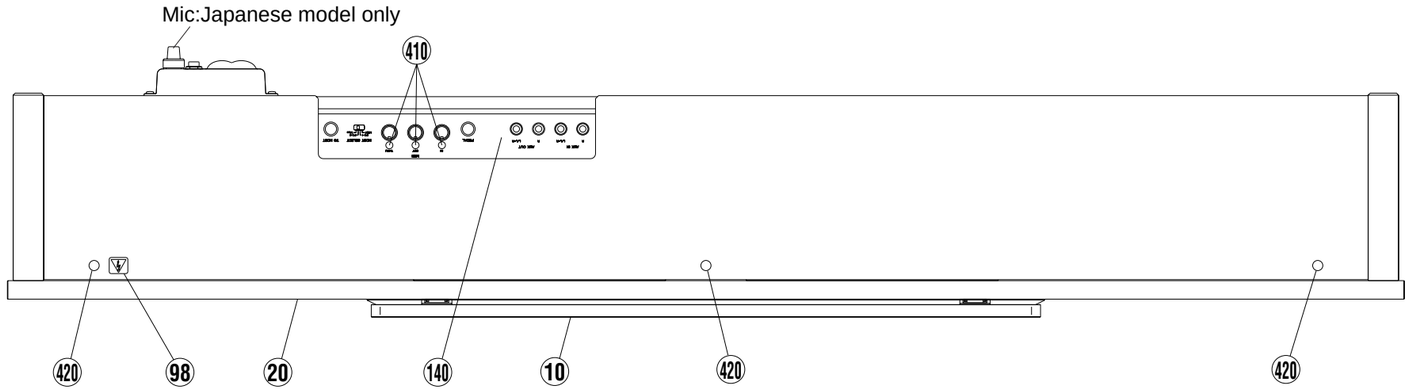

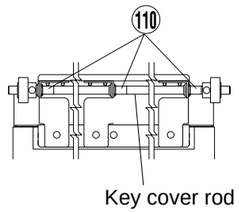

• Top view

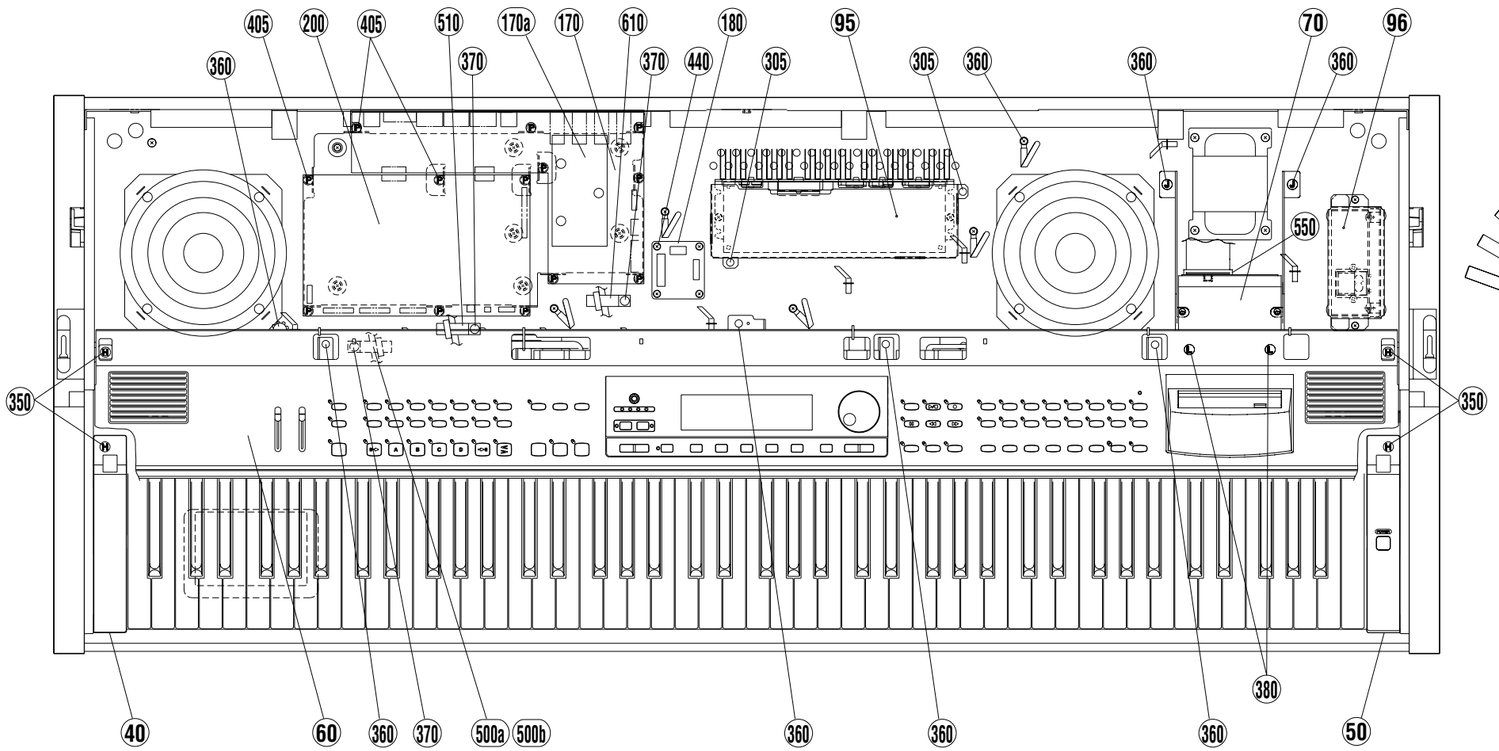

• Side view

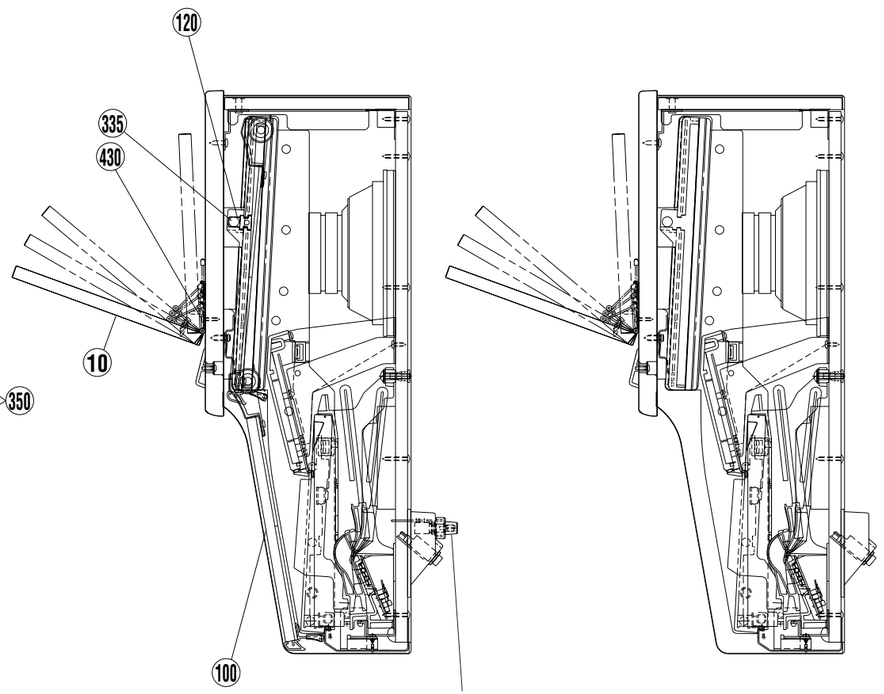

■ UPPER UNIT & FRONT RAIL ASSEMBLY

• **Bottom view**

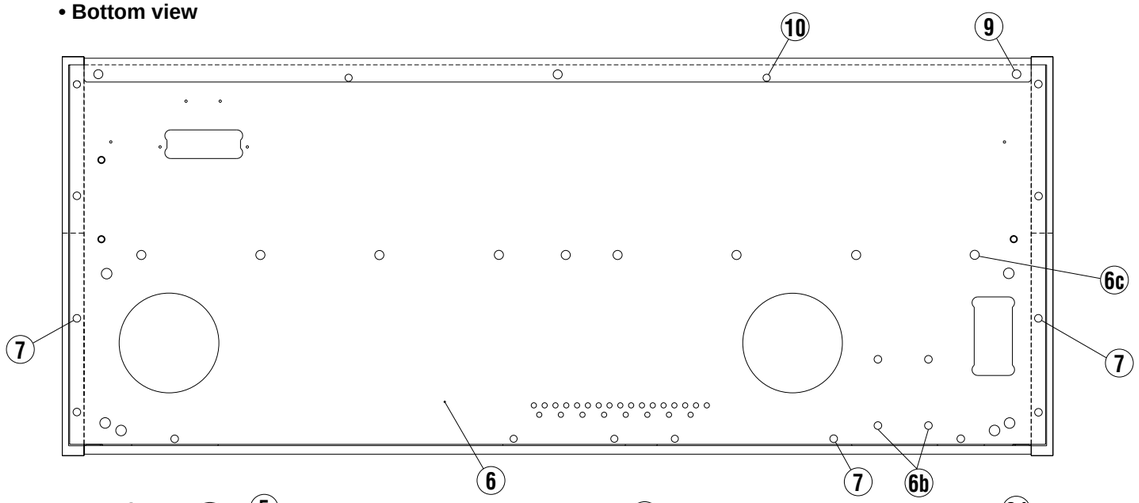

• **Top view**

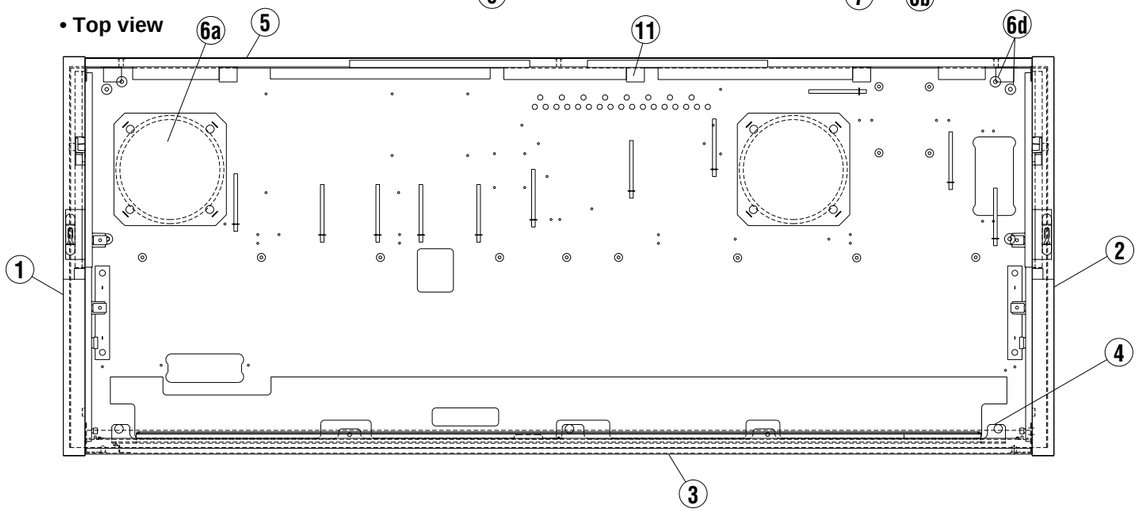

• **Left side view**

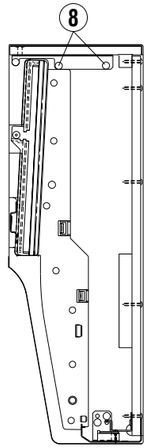

• **Right side view**

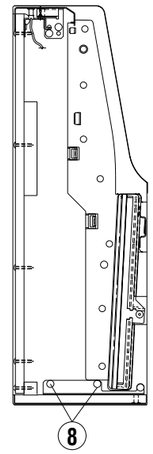

	REF NO.	PART NO.	DESCRIPTION			REMARKS		QTY	RANK
			UPPER UNIT			CVP-103/103M			
		--	Upper Unit			CVP-103	(V328140)		
		--	Upper Unit			CVP-103M	(V330840)		
*	1	**V3283000**	Side Cover Assembly	LEFT		CVP-103			
*	1	**V3311100**	Side Cover Assembly	LEFT		CVP-103M			
*	2	**V3283100**	Side Cover Assembly	RIGHT		CVP-103			
*	2	**V3311200**	Side Cover Assembly	RIGHT		CVP-103M			
	3	--	Front Rail Assembly			CVP-103	(V328320)		
	3	--	Front Rail Assembly			CVP-103M	(V331130)		
*	4	**V4008700**	Holder Assembly, Keyboard						10
*	5	**V3283300**	Back Top Board Assembly						
*	6	**V3217500**	Keybed Assembly						
	6a	**VF823100**	Metal Net					2	03
	6b	**ET200040**	Nut	B 4.0X11.5	MFZN2Y			4	01
	6c	**ET200030**	Nut	B 5.0X12	MFZN2Y			9	01
	6d	**ET200050**	Nut	B 6.0X12.5	MFZN2Y			6	02
	7	**EN630190**	Truss Head Tapping Screw-1	3.5X25	MFZN2BL			14	01
	8	**EP030190**	Bind Head Tapping Screw-1	3.5X16	MFZN2Y			10	01
	9	**EP030340**	Bind Head Tapping Screw-1	3.5X12	MFZN2BL			6	01
	10	**VB403600**	Bind Head Screw	4.0X20	MFZN2BL			2	01
	11	--	Tape	T-200 25X59			(VZ28970)	3	

*:New Parts RANK:Japan only

• **FRONT RAIL ASSEMBLY**

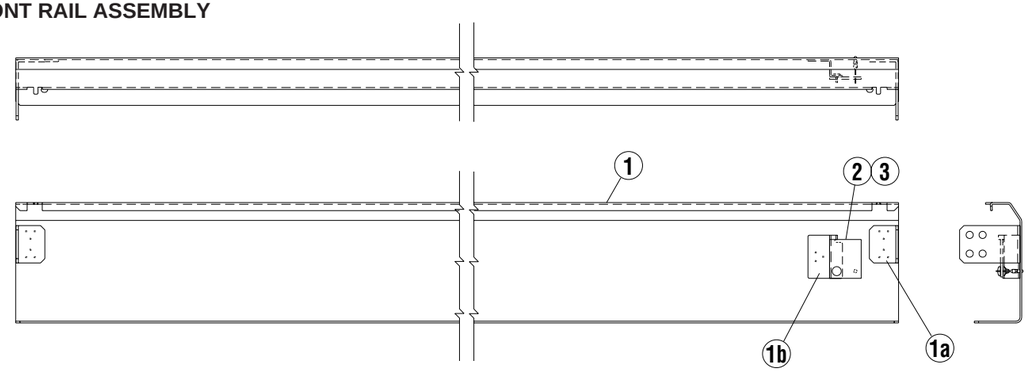

	REF NO.	PART NO.	DESCRIPTION			REMARKS		QTY	RANK
			FRONT RAIL ASSEMBLY			CVP-103/103M			
		--	Front Rall Assembly			CVP-103	(V328320)		
		--	Front Rail A			CVP-103M	(V331130)		
*	1	**V4020700**	Front Rail			CVP-103			
*	1	**V4020800**	Front Rail			CVP-103M			
	1a	**VZ791000**	Holder, Rail					2	
	1b	**VN888800**	Holder, PL P.C.B.						10
	2	**VN637600**	Circuit Board	PL			(XL151B0)		05
	3	**EP600230**	Bind Head Tapping Screw-B	3.0X6	MFZN2BL			3	01

*:New Parts RANK:Japan only

TOP BOARD ASSEMBLY

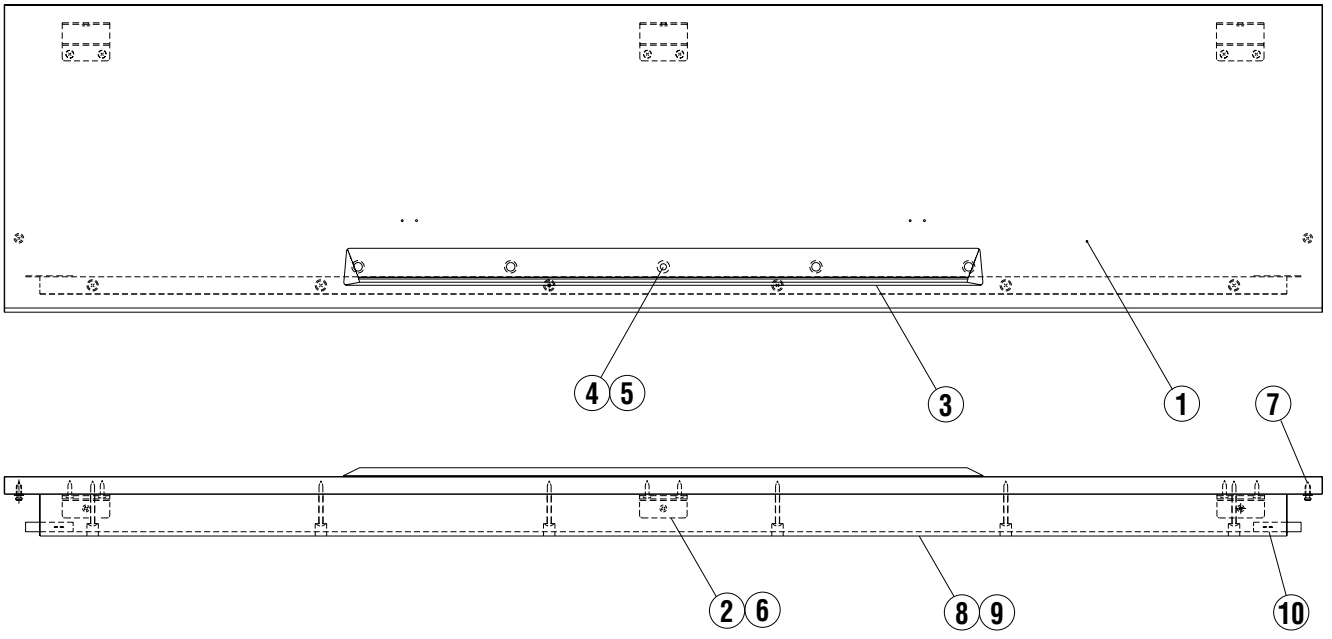

	REF NO.	PART NO.	DESCRIPTION				REMARKS		QTY	RANK
			TOP BOARD ASSEMBLY				CVP-103/103M			
*		**V3252700**	Top Board Assembly (Cover)	YCJ			CVP-103 J			
*		**V3583000**	Top Board Assembly	YMMA			CVP-103 U,B,N			
*		**V3267700**	Top Board Assembly (Cover)	YMMA			CVP-103 E			
*		**V3583400**	Top Board Assembly	YMMA			CVP-103M U			
*		**V3305600**	Top Board Assembly (Cover)	YMMA			CVP-103M E			
	1	**- -**	Top Board	YCJ			CVP-103 J	(V328240)		
	1	**- -**	Top Board	YMMA			CVP-103 U	(V358310)		
	1	**- -**	Top Board	YMMA			CVP-103 B,E,N	(V332440)		
	1	**- -**	Top Board	YMMA			CVP-103M U	(V358350)		
	1	**- -**	Top Board	YMMA			CVP-103M B,E,N	(V340800)		
	2	**VQ485800**	Holder, Top Board	RIGHT					3	05
	3	**VY891000**	Stopper Rail, Music Score				CVP-103			12
*	3	**V3308900**	Stopper Rail, Music Score				CVP-103M			
	4	**EP600270**	Bind Head Tapping Screw-P	3.0X10	MFZN2Y				5	01
	5	**VK287600**	Flat Washer	4.0X12X1.0	MFZN2Y				5	01
	6	**EP040170**	Bind Head Tapping Screw-1	4.0X16	MFZN2Y				6	01
	7	**VV444100**	Screw						2	03
*	8	**V3282800**	Ornament, Top Board				CVP-103 U,B,N			
*	8	**V3310900**	Ornament, Top Board				CVP-103M U,B			
	9	**VQ488900**	Truss Head Tapping Screw-1	4.0X45	MFZN2Y		U,B		6	01
	10	**VT479700**	Cushion	50X10X1			U,B		2	01

*:New Parts

RANK:Japan only

CONTROL PANEL ASSEMBLY

	REF NO.	PART NO.	DESCRIPTION			REMARKS		QTY	RANK
			CONTROL PANEL ASSEMBLY			CVP-103/103M			
		- -	Control Panel Assembly			CVP-103 J,B,E,N	(V326340)		
		- -	Control Panel Assembly			U	(V326350)		
		- -	Control Panel Assembly			CVP-103M B,E	(V326340)		
*	5	V3309400	Control Panel						
*	10	V3618600	Push Button	2A		STYLE		2	
*	20	V3179800	Push Button	2G		AUTO ACCOMPANIMENT			
*	30	V3618900	Push Button	4E		METRONOME,TEMPO/RESET			
*	40	V3619000	Push Button	5E		GUIDE CONTROL			
*	50	V3619400	Push Button	2H		TAP,SYNCHRD,START/STOP			
*	60	V3619300	Push Button	J2		FUNCTION,MIXER			
*	70	V3619500	Push Button	K2		PAGE,-,+		2	
*	80	V3354800	Push Button	3I		DIRECT ACCESS,EXIT			
*	90	V3619200	Push Button	F2		SONG,PLAY/STOP,REC			
*	100	V3619100	Push Button	6E		PAUSE,REW,FF			
*	110	V3618700	Push Button	2B		PIANO, ... ,REVERB			
*	120	V3618800	Push Button	4C		BRASS, ... ,EFFECT			
*	130	V3179700	Push Button	3C		1, ... ,ONE TOUCH SETTING			
	140	VV795000	LCD Cover						07
	150	VT191300	Sheet						04
	160	VS179900	Slide Knob			VOLUME		2	03
	170	VQ664100	Encoder Knob	VL1					02
	180	VT196300	Felt	MK					04
	190	VV618600	Knob	BL		CONTRAST			03
*	200	V3148800	Circuit Board	PN1A			(XV470A0)		
*	205	V3148900	Circuit Board	PN1B			(XV470A0)		
*	210	V3149300	Circuit Board	PN2			(XV470A0)		
*	220	V3149000	Circuit Board	PN3A			(XV470A0)		
*	225	V3149100	Circuit Board	PN3B			(XV470A0)		
*	230	V3149200	Circuit Board	MV			(XV470A0)		
	240	EP600450	Bind Head Tapping Screw-B	3.0X5	MFZN2BL			4	01
	250	EP600250	Bind Head Tapping Screw-B	3.0X8	MFZN2Y			49	01
	255	EP600140	Bind Head Tapping Screw-B	3.0X10	MFZN2BL	U		11	01
	255	EP600140	Bind Head Tapping Screw-B	3.0X10	MFZN2BL	J,B,E,N		10	01
	260	VV615100	Holder, Panel	A				4	03
	270	VV615700	Holder, Panel	B					05
	280	XL455A00	Speaker	5.0CM 16 ohm 60W		Monitor		2	07
	280	XQ524B00	Speaker	5.0CM 16 ohm 60W		Monitor		2	06
	290	VT280400	Panel Holder Assembly						03
	300	VT699400	LCD Holder Assembly						05
*	310	V3316000	LCD	EDMMR03A00					17
	320	VB390800	Connector Base Post	PH-12P TE					01
	410	- -	Connector Assembly	PN-LF			(V327820)		
	410a	VD947800	Data Line Filter	ESD-R-25D-B				2	05
	420	- -	Connector Assembly	LCD-LF			(V327860)		
	420a	VD947800	Data Line Filter	ESD-R-25D-B					05
	430	- -	Connector Assembly	PN-LF3		U	(V327970)		
	430a	VD947800	Data Line Filter	ESD-R-25D-B		U			05
	440	VJ989200	Connector Assembly	10P-100		J,B,E,N			05
	450	VK098800	Connector Assembly	12P-100					05
	460	- -	Connector Assembly	PN-LF2			(V343850)		
	460a	VD947800	Data Line Filter	ESD-R-25D-B					05
	480	VK104700	Connector Assembly	12P-250					06
	490	- -	Connector Assembly	VOL L=550			(V325900)		
	500	- -	Connector Assembly	MON-SP			(V326130)		
	510	VK099800	Connector Assembly	3P-150					04
*	600	V3316100	Back-lit Assembly						
	630	VT259300	Spacer Assembly						04
	640	VP834600	Adhesive Tape	12X50				2	02
	650	CB069250	Cord Holder	BK-1				8	01
	670	- -	Cushion				(VY72690)		
	680	- -	Cushion				(VY72700)		
	690	- -	Cushion				(VT84930)		
	700	EP600240	Bind Head Tapping Screw-B	4.0X10	MFZN2BL	U		5	01
	700	EP600240	Bind Head Tapping Screw-B	4.0X10	MFZN2BL	J,B,E,N		4	01

*:New Parts

RANK:Japan only

• **Bottom view**

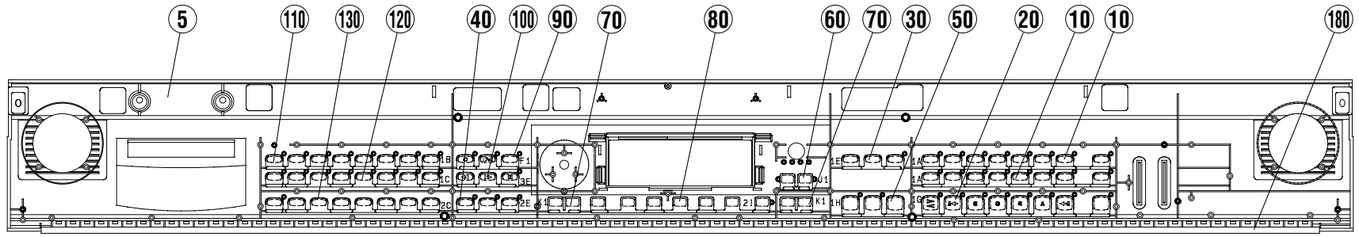

• **Side view**



• **LCD assembly**
(Side view)

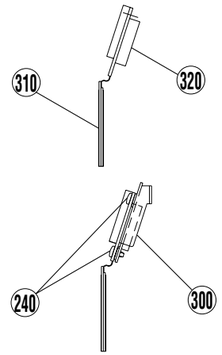

• **Bottom view**

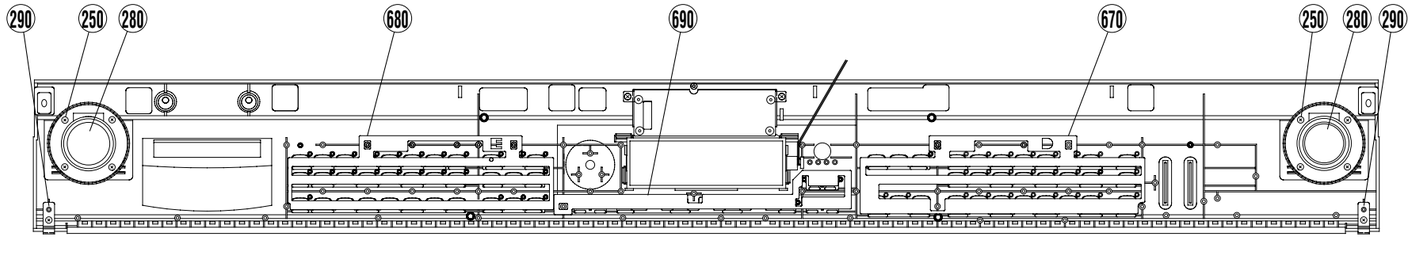

• **LCD assembly**
(Internal view)

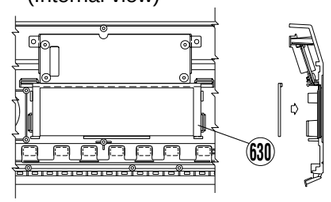

• **Bottom view**

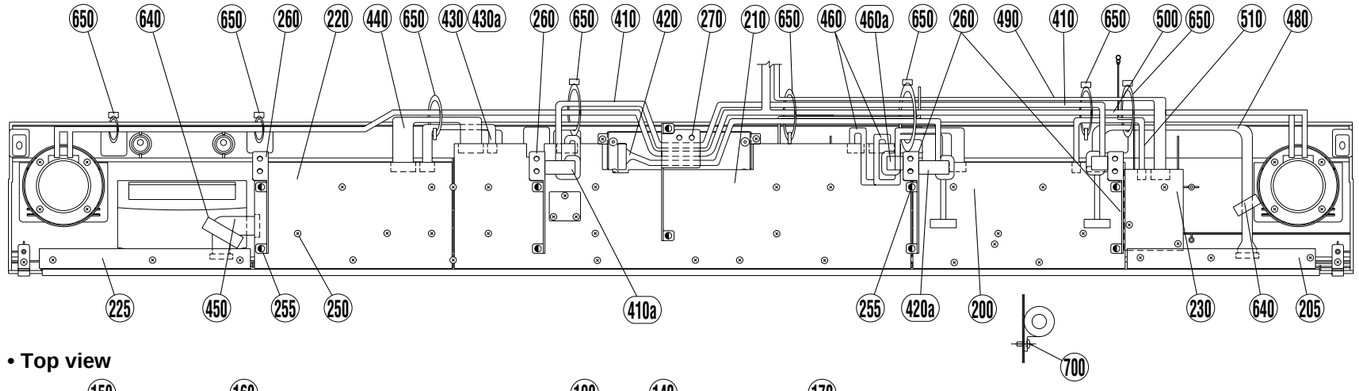

• **Side view**

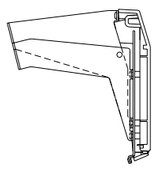

• **LCD assembly**
(Internal view)

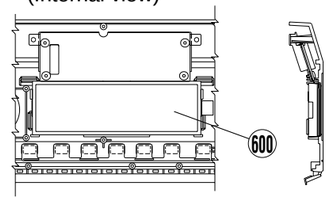

• **Top view**

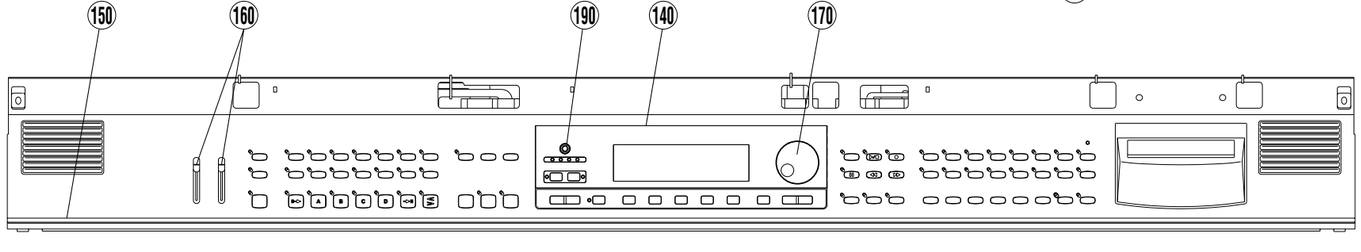

• **LCD assembly**
(Internal view)

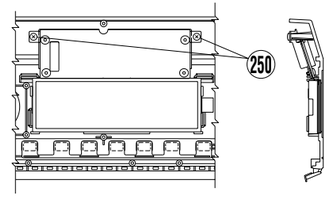

■ MUSIC REST ASSEMBLY

• Front view

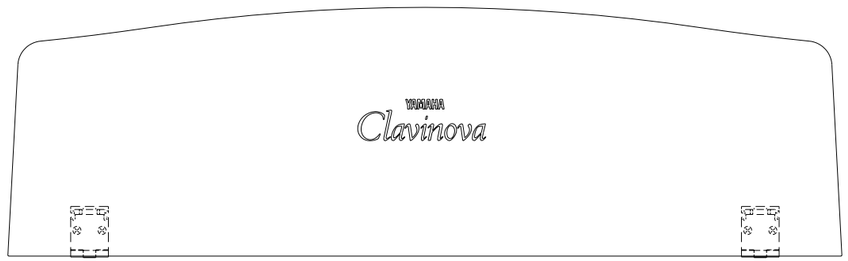

• Side view

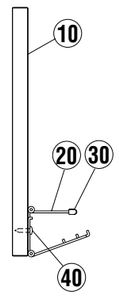

	REF NO.	PART NO.	DESCRIPTION			REMARKS		QTY	RANK
			MUSIC REST ASSEMBLY			CVP-103/103M			
*		**V3325100**	Music Rest Assembly			CVP-103			
*		**V3308300**	Music Rest Assembly			CVP-103M			
	10	**- -**	Music Rest			CVP-103	(V332520)		
	10	**- -**	Music Rest			CVP-103M	(V331100)		
	20	**VV603100**	Hinge	3STEP				2	07
	30	**VV965900**	Hinge Cap					2	03
	40	**20404200**	Bind Head Tapping Screw-1	3.0X10	MFZN2BL			4	

*:New Parts RANK:Japan only

■ KEY COVER ASSEMBLY

• Bottom view

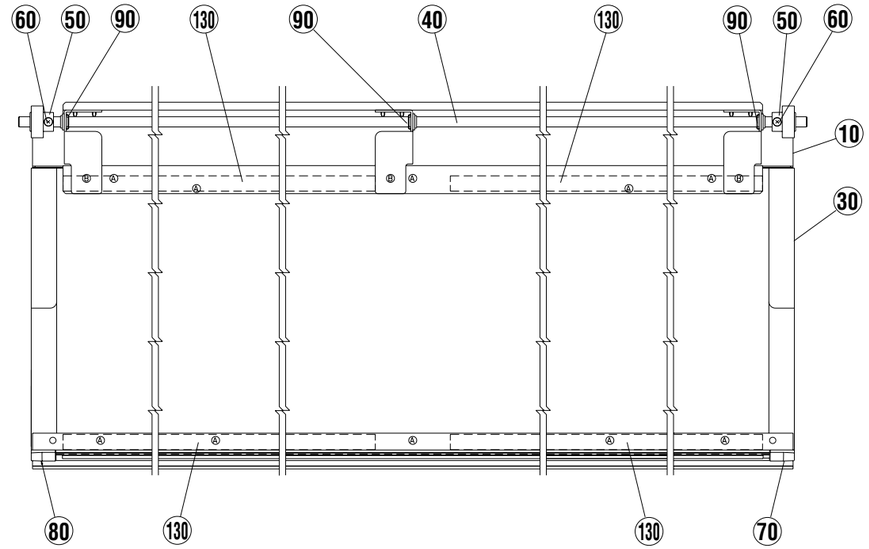

• Side view

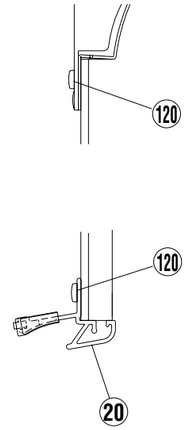

• Sash cover (L) installation

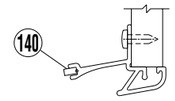

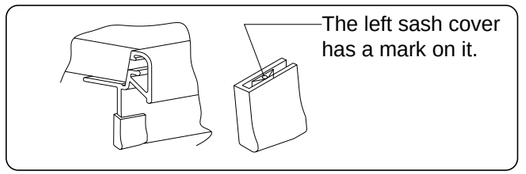

	REF NO.	PART NO.	DESCRIPTION			REMARKS		QTY	RANK
			KEY COVER ASSEMBLY			CVP-103/103M			
*		**V3258900**	Key Cover Assembly			CVP-103			
*		**V3306700**	Key Cover Assembly			CVP-103M			
*	10	**V3282600**	Sash Assembly	REAR		CVP-103			
*	10	**V3309100**	Sash Assembly	REAR		CVP-103M			
	20	**VV926600**	Sash	FRONT		CVP-103			12
*	20	**V3283700**	Sash	FRONT		CVP-103M			
	30	**- -**	Slide Cover	YCJ		CVP-103	(V328270)		
	30	**- -**	Slide Cover			CVP-103M	(V330920)		
	40	**VT190800**	Rod						10
	50	**VT190400**	Gear					2	03
	60	**EG330060**	Bind Head Screw	3.0X10	MFZN2Y			2	01
	70	**VU274900**	Sash Cover	BL REFT					03
	80	**VU275000**	Sash Cover	BL RIGHT					03
	90	**VS368500**	Bushing					3	03
	120	**EP030320**	Bind Head Tapping Screw-1	3.5X10	MFZN2BL			21	01
	130	**- -**	Adhesive Tape	#500 600X12			(VO02370)	4	
	140	**- -**	Cushion	421X2.5X5			(VV53010)	3	

*:New Parts RANK:Japan only

SIDE COVER ASSEMBLY (L, R)

• Top view

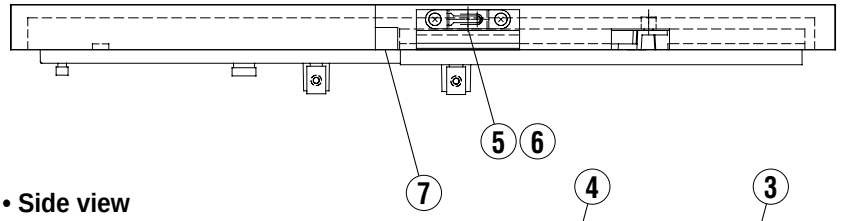

• Front view

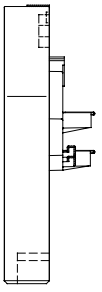

• Side view

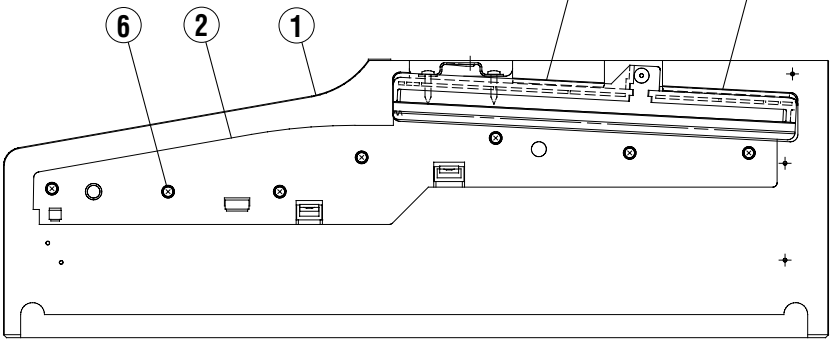

• SIDE COVER ASSEMBLY (L)

	REF NO.	PART NO.	DESCRIPTION			REMARKS		QTY	RANK
			SIDE COVER ASSEMBLY	LEFT		CVP-103/103M			
*		**V3283000**	Side Cover Assembly	LEFT		CVP-103			
*		**V3311100**	Side Cover Assembly	LEFT		CVP-103M			
	1	**- -**	Side Cover	LEFT		CVP-103	(V321060)		
	1	**- -**	Side Cover	LEFT		CVP-103M	(V331220)		
	2	**VV720000**	Inner Cap Assembly	LEFT					07
	3	**- -**	Cushion	0.25X6X85			(VT81370)		
	4	**- -**	Cushion	0.25X6X135			(VT81380)		
	5	**VV444200**	Holder, Top Board	1.20 BL					03
	6	**EP030190**	Bind Head Tapping Screw-1	3.5X16	MFZN2Y			9	01
	7	**- -**	Dust Proof Cloth	15X15X0.9			(VZ08590)		

*:New Parts RANK:Japan only

• SIDE COVER ASSEMBLY (R)

	REF NO.	PART NO.	DESCRIPTION			REMARKS		QTY	RANK
			SIDE COVER ASSEMBLY	RIGHT		CVP-103/103M			
*		**V3283100**	SIDE COVER ASSEMBLY	RIGHT		CVP-103			
*		**V3311200**	Side Cover Assembly	RIGHT		CVP-103M			
	1	**- -**	Side Cover	RIGHT		CVP-103	(V321070)		
	1	**- -**	Side Cover	RIGHT		CVP-103M	(V331230)		
	2	**VV720200**	Inner Cap Assembly	RIGHT					07
	3	**- -**	Cushion	0.25X6X85			(VT81370)		
	4	**- -**	Cushion	0.25X6X135			(VT81380)		
	5	**VV444200**	Holder, Top Board	1.20 BL					03
	6	**EP030190**	Bind Head Tapping Screw-1	3.5X16	MFZN2Y			9	01
	7	**- -**	Dust Proof Cloth	15X15X0.9			(VZ08590)		

*:New Parts RANK:Japan only

■ END BLOCK ASSEMBLY (L, R) & POWER SWITCH ASSEMBLY

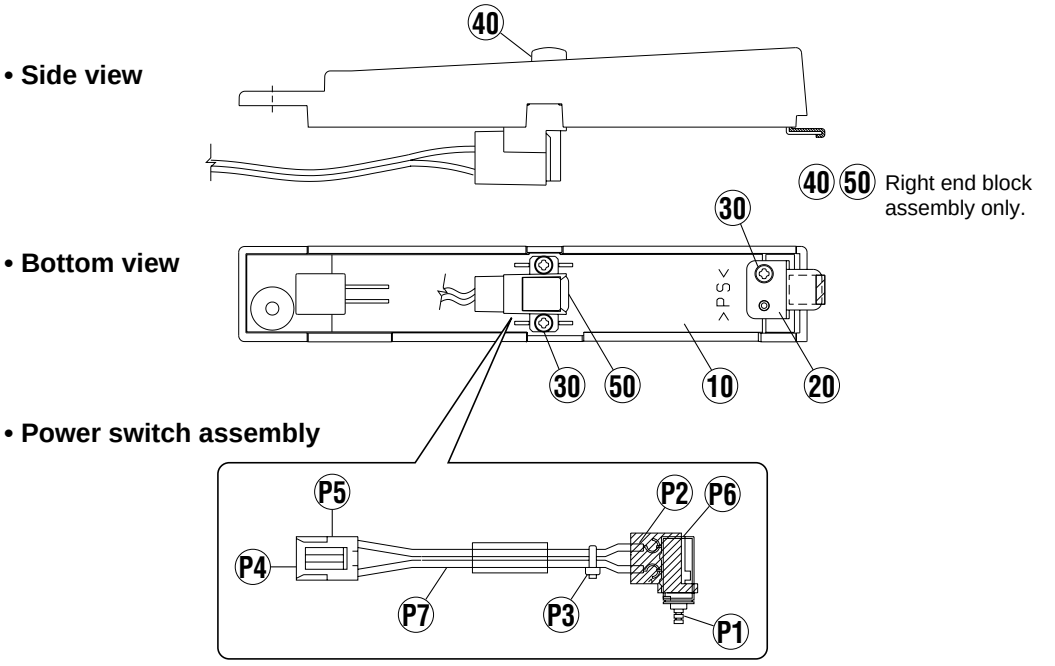

• END BLOCK ASSEMBLY (L)

REF NO.	PART NO.	DESCRIPTION			REMARKS		QTY	RANK
	- -	END BLOCK ASSEMBLY	LEFT		CVP-103/103M	(VV60330)		
10	**VV599700**	End Block	LEFT					06
20	**VL732000**	Holder Assembly	FRONT					04
30	**EP600190**	Bind Head Tapping Screw-B	3.0X8	MFZN2BL				01

∗:New Parts RANK:Japan only

• END BLOCK ASSEMBLY (R)

REF NO.	PART NO.	DESCRIPTION			REMARKS		QTY	RANK
	- -	END BLOCK ASSEMBLY	RIGHT		CVP-103/103M	(VV60320)		
10	**VV599600**	End Block	RIGHT					06
20	**VL732000**	Holder Assembly	FRONT					04
30	**EP600190**	Bind Head Tapping Screw-B	3.0X8	MFZN2BL			3	01
40	**VF663400**	Knob	BL		POWER			02
50	- -	Power Switch Assembly				(VV65000)		

∗:New Parts RANK:Japan only

• POWER SWITH ASSEMBLY

REF NO.	PART NO.	DESCRIPTION			REMARKS		QTY	RANK
	- -	POWER SWITCH ASSEMBLY			CVP-103/103M	(VV65000)		
P1	**VC843500**	Push Switch	SDDLB1216A J.U.C.S		POWER switch			03
P2	**CB049980**	Switch Cover	BL					01
P3	**CB069250**	Cord Holder	BK-1					01
P3	**VV558400**	Cord Binder	AZ-100					01
P4	**LB101710**	Connector Pin	SVH-21T-P1.1				2	01
P5	**LB015030**	Connector Housing	VH- 3P					01
P6	**VH664300**	Cushion	UN-2 t=3					03
P7	- -	Cable	AWG20mm 1672 AWM			(VA16400)		
P7	- -	Cable	AWG20mm 1672 AWM			(VA16410)		

∗:New Parts RANK:Japan only

HEADPHONES JACK UNIT

• **Bottom view** • **Side view**

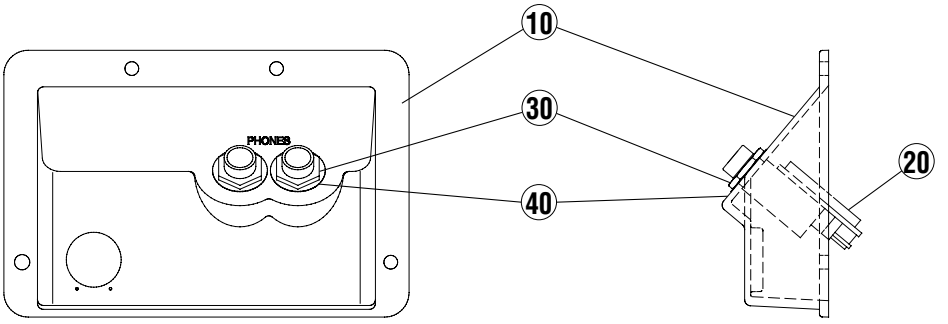

REF NO.	PART NO.	DESCRIPTION			REMARKS	QTY	RANK
	- -	HEADPHONES JACK UNIT			CVP-103/103M (VT47940)		
10	**VT519000**	Headphones Cover			U,B,E,N		07
20	**VT478400**	Circuit Board	HP		(XQ795A0)		10
30	**VB508600**	Hexagonal Nut	12.0 14X2 MFZN2BL		U,B,E,N	2	01
40	**VJ869400**	Washer	BL		U,B,E,N	2	02

⋆:New Parts RANK:Japan only

FDD ASSEMBLY

• **Side view**

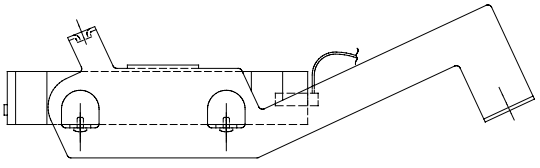

• **Bottom view**

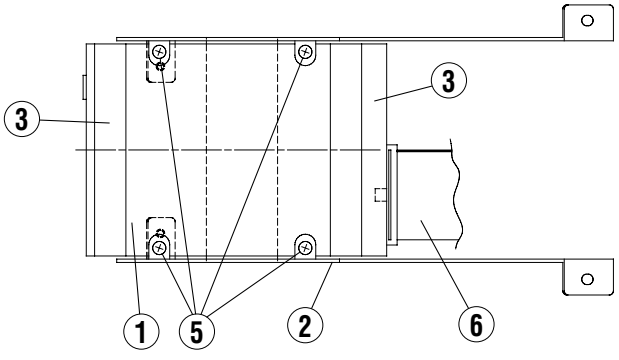

REF NO.	PART NO.	DESCRIPTION			REMARKS	QTY	RANK
	- -	FDD ASSEMBLY			CVP-103/103M (V328160)		
1	**V2043400**	Floppy Disk Drive	D359M3				16
2	**VV617200**	Holder					07
3	- -	Tape	#5 15X30M BL		(V256440)		
5	**EG330150**	Bind Head Screw	3.0X5 MFZN2Y			4	01
6	- -	Connector Assembly	FDD-SIG L=900		(V326150)		

⋆:New Parts RANK:Japan only

MA60 ASSEMBLY

• **Top view**

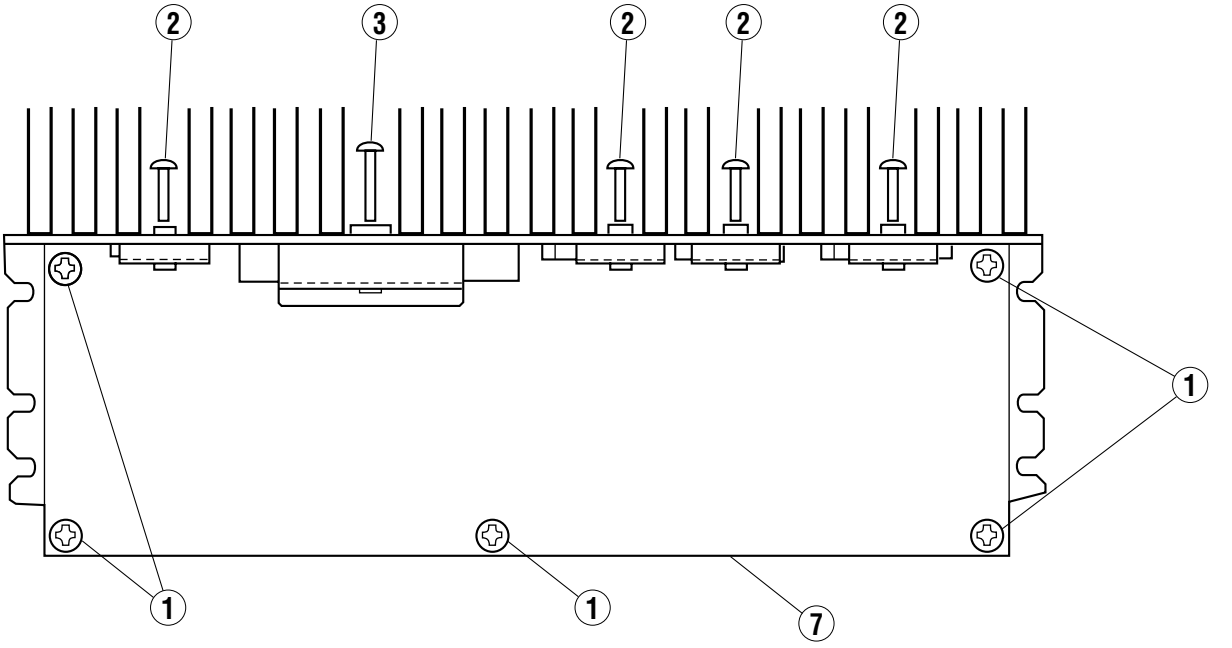

• **Front view**

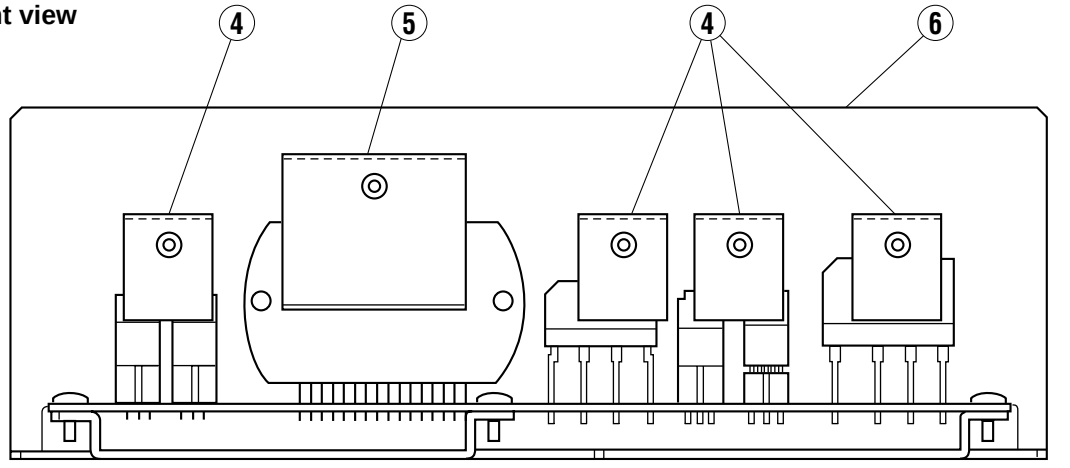

REF NO.	PART NO.	DESCRIPTION				REMARKS	QTY	RANK
		MA60 ASSEMBLY				CVP-103/103M		
	VT144300	MA60 Assembly				CVP-103 J,U		
	VT144300	MA60 Assembly				CVP-103M		
	VT144400	MA60 Assembly				B,E,N		
1	**EP640410**	Bind Head Tapping Screw-B	4.0X8	MFZN2Y			5	01
2	**EP600220**	Bind Head Tapping Screw-B	3.0X10	MFZN2Y			4	01
3	**EP600390**	Bind Head Tapping Screw-B	3.0X16	MFZN2Y				01
4	**VT461100**	Transistor Holder	A				4	03
5	**VT461200**	Transistor Holder	B					03
6	**VT444300**	Heat Sink						11
7	**- -**	Circuit Board				J,U (VT14390,XQ393E0)		
7	**- -**	Circuit Board				B,E,N (VT14400,XQ393E0)		

∗:New Parts RANK:Japan only

FU60 ASSEMBLY

• Front view

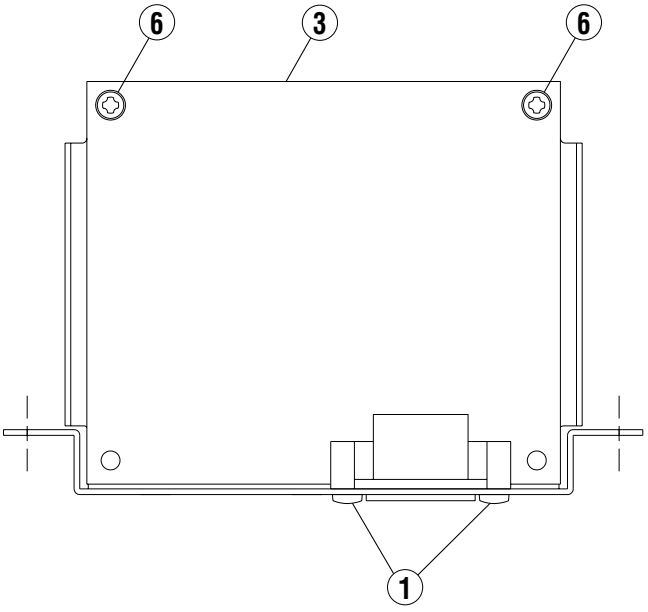

• Top view

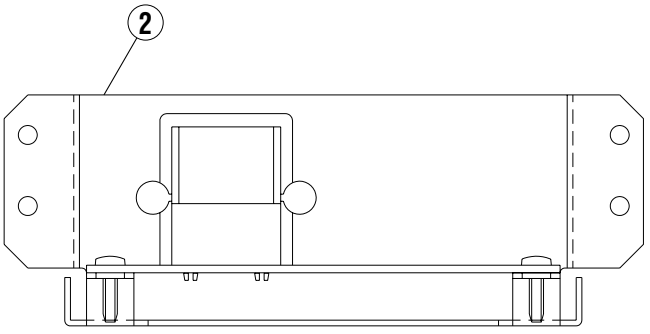

REF NO.	PART NO.	DESCRIPTION				REMARKS	QTY	RANK
		FU60 ASSEMBLY				CVP-103/103M		
	VT152000	FU60 Assembly				CVP-103 J		10
	VT152100	FU60 Assembly				U		10
	VT152200	FU60 Assembly				B,E		10
	VT153300	FU60 ASSEMBLY				CVP-103 N		12
1	**EP600190**	Bind Head Tapping Screw-B	3.0X8	MFZN2BL			2	01
2	**VT172900**	Plate, AC Inlet						07
3	**- -**	Circuit Board				CVP-103J (VT15140,XQ395A0)		
3	**- -**	Circuit Board				U (VT15150,XQ395A0)		
3	**- -**	Circuit Board				B,E (VT15160,XQ395A0)		
3	**- -**	Circuit Board				CVP-103N (VT15290,XQ395A0)		
6	**VE683000**	Bind Head Tapping Screw-B	3.0X12	MFZN2Y			2	01

⋆:New Parts

RANK:Japan only

KEYBOARD ASSEMBLY

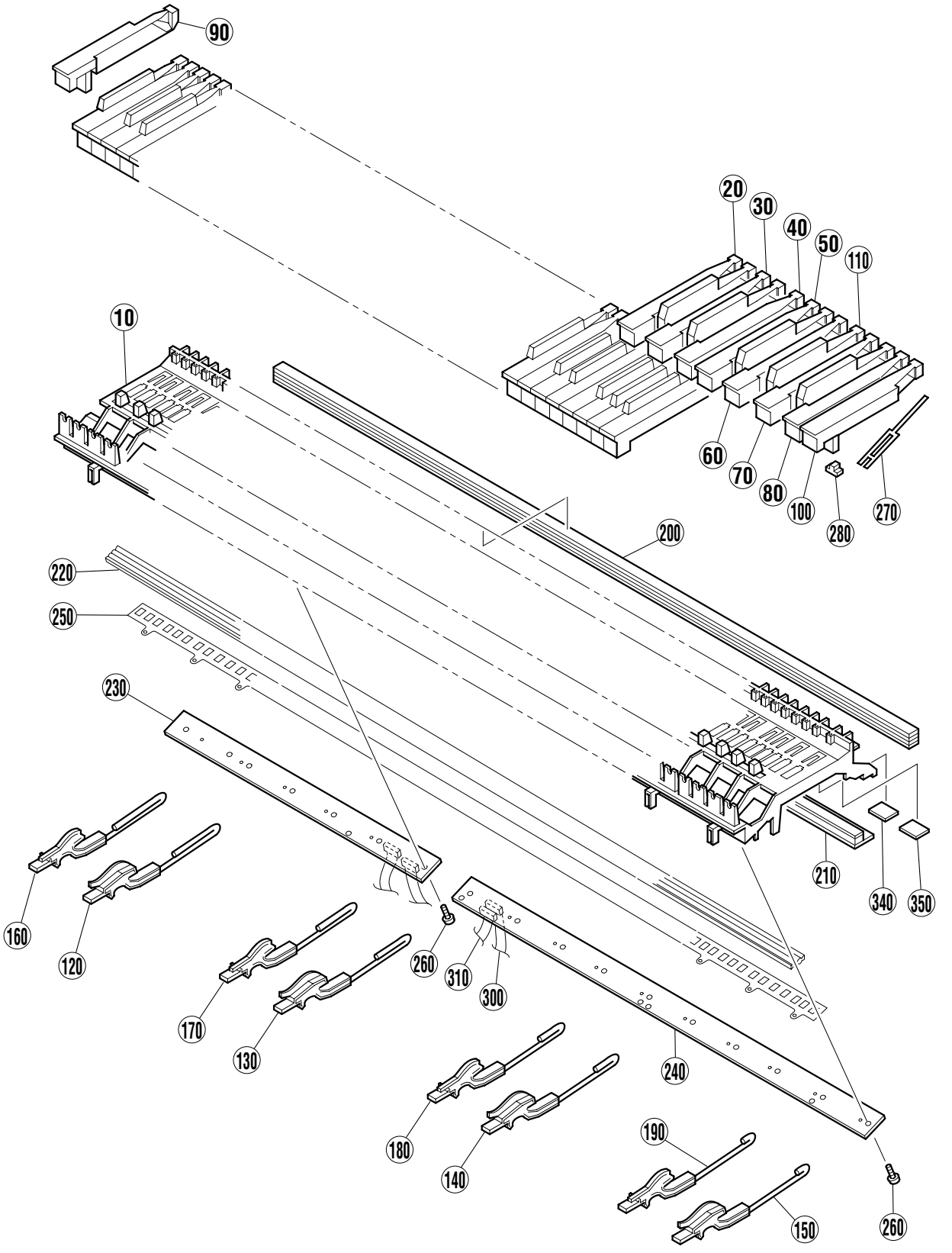

REF NO.	PART NO.	DESCRIPTION			REMARKS	QTY	RANK
	VU431800	KEYBAED ASSEMBLY	A88 K6		CVP-103/103M		55
10	**- -**	MK Frame	88		(VU42210)		
20	**VU101000**	White Key	C			7	05
30	**VU101100**	White Key	D			7	05
40	**VU101200**	White Key	E			7	05
50	**VU101300**	White Key	F			7	05
60	**VU101400**	White Key	G			7	05
70	**VU101500**	White Key	A			7	05
80	**VU101600**	White Key	B			8	05
90	**VU101700**	White Key	A'				05
100	**VU101800**	White Key	C'				05
110	**VU102100**	Black Key	BL			36	05
120	**VU102200**	Hammer, White Key	1		A-1...F1	13	06
130	**VU102300**	Hammer, White Key	2		G1...E3	13	06
140	**VU102400**	Hammer, White Key	3		F3...D5	13	06
150	**VU102500**	Hammer, White Key	4		E5...C7	13	06
160	**VU102600**	Hammer, Black Key	1		A#-1...F#1	9	06
170	**VU102700**	Hammer, Black Key	2		G#1...D#3	9	06
180	**VU102800**	Hammer, Black Key	3		F#3...C#5	9	06
190	**VU102900**	Hammer, Black Key	4		D#5...A#6	9	06
200	**VU342100**	Stopper	U88				09
210	**VU342200**	Stopper	L88				09
220	**VY693500**	Rubber Contact	GH A88 2M				11
230	**VU342300**	Circuit Board	AEXL88L				12
240	**VU342400**	Circuit Board	AEXL88H				13
250	**VU266500**	Insulation Spacer	AEX88				06
260	**VT413400**	Bind Head Tapping Screw-P	3.0X10 MFZN2			17	01
270	**VZ417900**	Spring	GH			88	03
270	**VZ417900**	Spring	GH			88	
280	**V2211300**	Rubber				88	03
280	**V2211300**	Rubber	2			88	03
290	**- -**	Grease	PG-661		(VU34200)		
300	**VU341800**	Connector Assembly, Block	9P				06
310	**VU341900**	Connector Assembly, Note	12P				07
340	**VV467900**	Stopper Felt	A 35.5X20			7	03
350	**VV468100**	Stopper Felt	B 24X20			12	03

⋆:New Parts

RANK:Japan only

SIDE BOARD ASSEMBLY (L, R)

• Top view

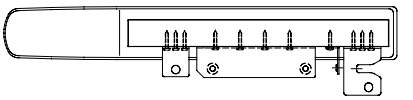

• Front view • Side view

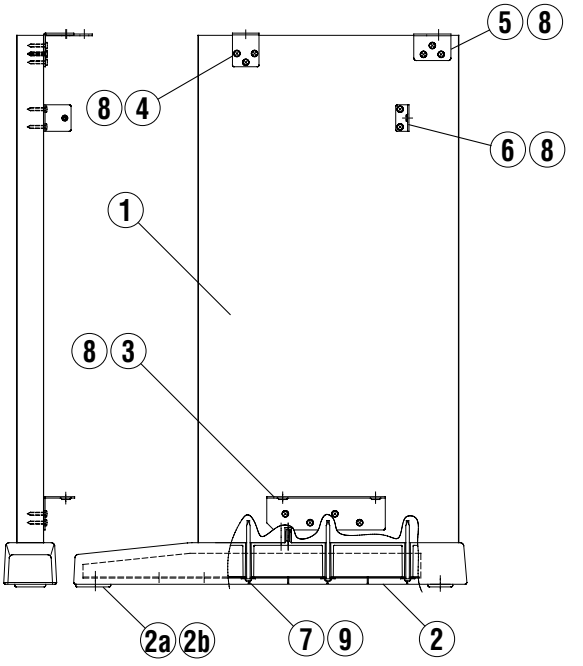

• SIDE BOARD ASSEMBLY (L)

	REF NO.	PART NO.	DESCRIPTION			REMARKS		QTY	RANK
			SIDE BOARD & STAND BASE	LEFT		CVP-103/103M			
		--	Side Board & Stand Base	LEFT		CVP-103	(V320280)		
		--	Side Board & Stand Base	LEFT		CVP-103M	(V330680)		
*	1	**V3202300**	Side Board	LEFT		CVP-103			
*	1	**V3309300**	Side Board	LEFT		CVP-103M			
*	2	**V3202700**	Stand Base Assembly	BR					
	2a	**VP316200**	Foot						05
	2b	**VA914400**	Bind Head Tapping Screw-B	4.0X12	MFZN2Y			3	01
	3	**VU255600**	Holder, Pedal Box	LEFT					05
	4	**VN973100**	Angle Bracket, ST						04
	5	**VS295500**	Holder, ST	LEFT					05
	6	**VQ958300**	Holder, Back Board						05
	7	**VV444000**	Pan Head Tapping Screw-1	4.0X65	MFZN2Y			3	
	8	**EP030580**	Bind Head Tapping Screw-1	3.5X20	MFZN2BL			12	01
	9	**03765410**	Flat Washer	4.0X10X0.8	MFZN2Y			3	01

*:New Parts RANK:Japan only

• SIDE BOARD ASSEMBLY (R)

	REF NO.	PART NO.	DESCRIPTION			REMARKS		QTY	RANK
			SIDE BOARD & STAND BASE	RIGHT		CVP-103/103M			
		--	Side Board & Stand Base	RIGHT		CVP-103	(V320290)		
		--	Side Board & Stand Base	RIGHT		CVP-103M	(V330690)		
*	1	**V3202400**	Side Board	RIGHT		CVP-103			
*	1	**V3309500**	Side Board	RIGHT		CVP-103M			
*	2	**V3202700**	Stand Base Assembly	BR					
	2a	**VP316200**	Foot						05
	2b	**VA914400**	Bind Head Tapping Screw-B	4.0X12	MFZN2Y			3	01
	3	**VU255800**	Holder, Pedal Box	RIGHT					05
	4	**VN973100**	Angle Bracket, ST						04
	5	**VS295600**	Holder, ST	RIGHT					05
	6	**VQ958300**	Holder, Back Board						05
	7	**VV444000**	Pan Haed Tapping Screw-1	4.0X65	MFZN2Y			3	
	8	**EP030580**	Bind Head Tapping Screw-1	3.5X20	MFZN2BL			12	01
	9	**03765410**	Flat Washer	4.0X10X0.8	MFZN2Y			3	01

*:New Parts RANK:Japan only

PEDAL BOX ASSEMBLY

• **Bottom view** • **side view**

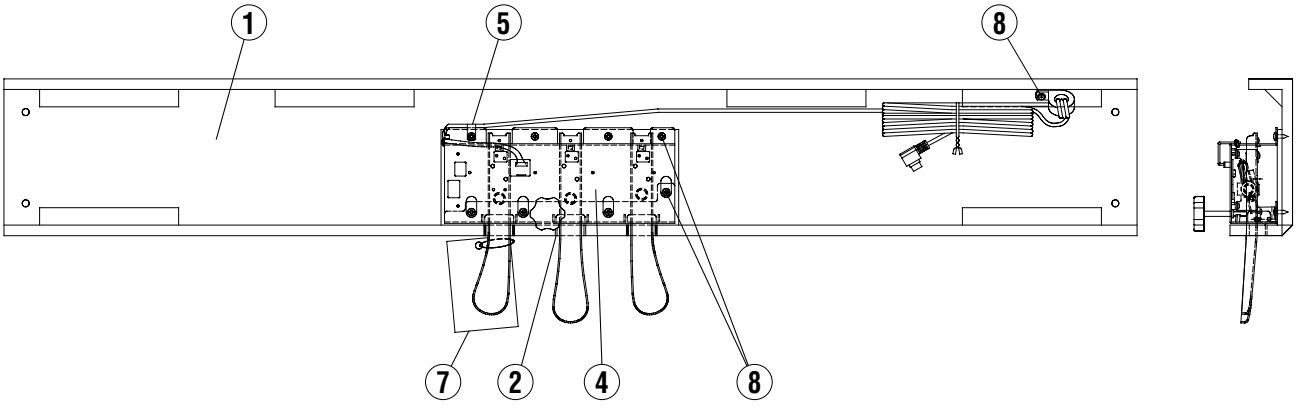

	REF NO.	PART NO.	DESCRIPTION			REMARKS		QTY	RANK
			PEDAL BOX ASSEMBLY			CVP-103/103M			
		- -	Pedal Box Assembly			CVP-103	(V320250)		
		- -	Pedal Box Assembly			CVP-103M	(V330700)		
*	1	**V3204500**	Pedal Box	YCJ		CVP-103			
*	1	**V3309700**	Pedal Box			CVP-103M			
	2	**VU464300**	Felt	115X12X2 RE				3	03
	4	**V0053700**	Pedal Assembly	(I)					18
	5	**CB065520**	Nylon Clamp	NK-3N					01
	7	- -	Caution Label				(VD96610)		03
	8	**EP040236**	Bind Head Tapping Screw-1	4.0X14 MFZN2Y				9	01

*:New Parts RANK:Japan only

PEDAL ASSEMBLY

• Top View

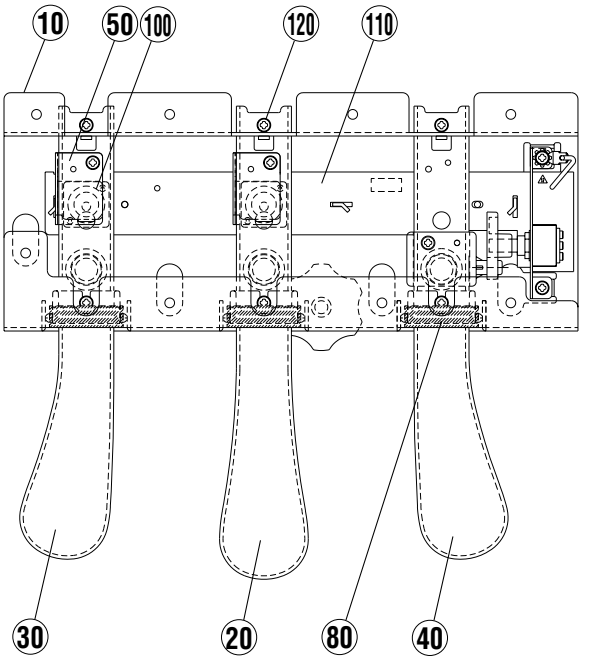

• Side View

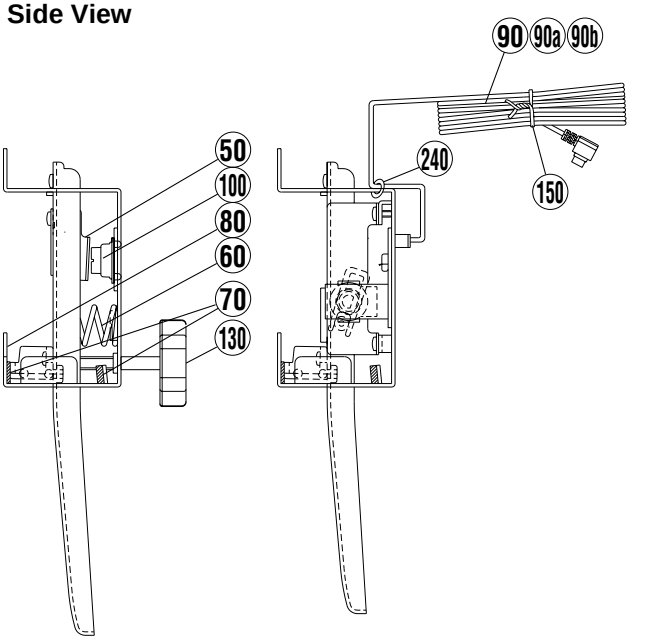

REF NO.	PART NO.	DESCRIPTION			REMARKS	QTY	RANK
	V0053700	PEDAL ASSEMBLY	(I)		CVP-103/103M		18
10	**VU339700**	Pedal Frame					09
20	**VU362000**	Pedal Piece	CENTER		Sostenuto		08
30	**VU362100**	Pedal Piece	LEFT		Soft		08
40	**VU362200**	Pedal Piece	RIGHT		Damper		08
50	**VV433500**	Actuator	PEDAL			3	03
60	**VP348100**	Pedal Spring				3	03
70	**VU346500**	Felt	PA BL			6	03
80	**VU339800**	Shutter	PEDAL			3	03
90	**V0044700**	PK Cable	PK-LF				10
90a	**VD947800**	Data Line Filter	ESD-R-25D-B				05
90b	**CB069250**	Cord Holder	BK-1				01
100	**VU456000**	Rubber Contact	1 DOAM PEDAL			3	03
110	**V2337300**	Circuit Board			(XR780B0)		07
120	**EP600190**	Bind Head Tapping Screw-B	3.0X8 MFZN2BL			10	01
130	**VU379700**	Adjuster					02
140	**- -**	Grease	G-31KA		(VE96850)		
150	**CB033610**	Cord Binder	L=160				01
240	**CB069250**	Cord Holder	BK-1				01

∗:New Parts RANK:Japan only

BENCH

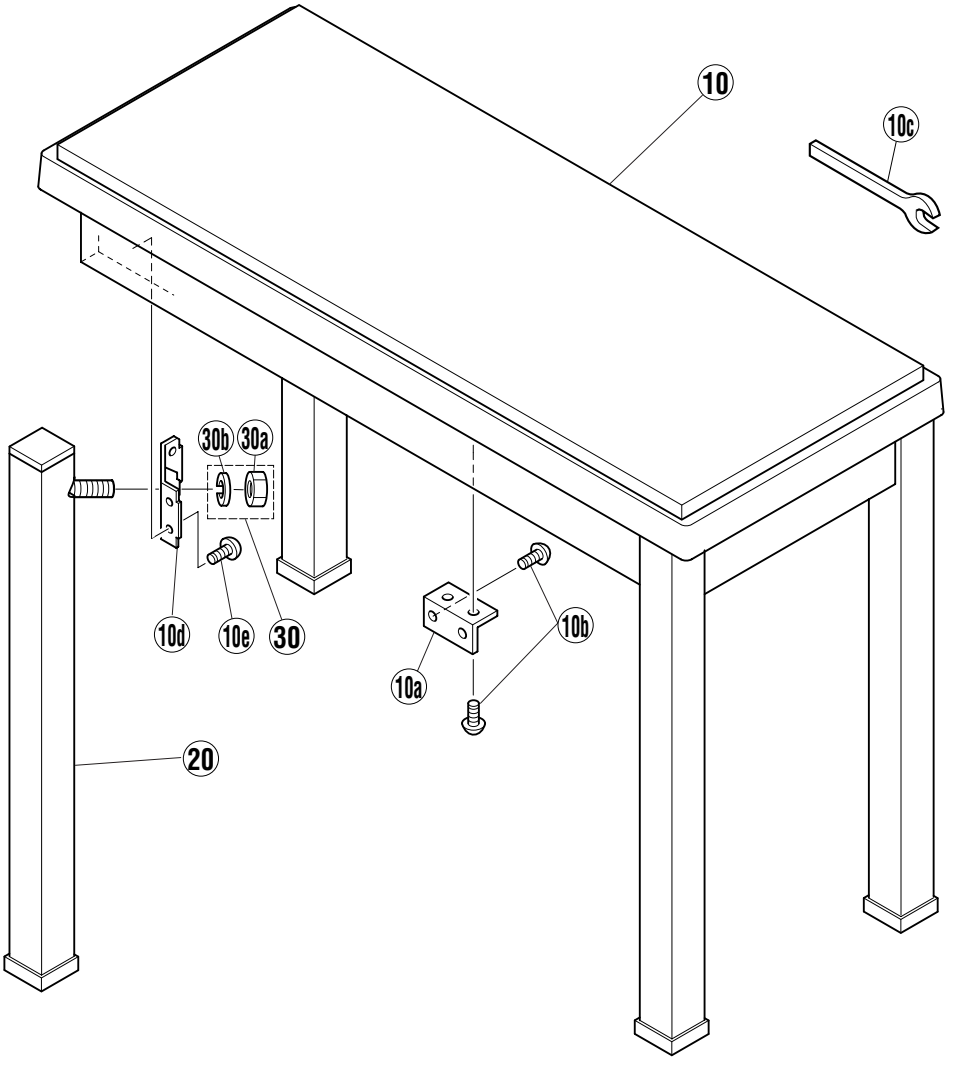

	REF NO.	PART NO.	DESCRIPTION				REMARKS		QTY	RANK
		- -	BENCH	YMMA			CVP-103 U,N	(V324000)		
*	10	**V3405100**	Bench Board Assembly							
	10a	**VC969300**	Holder, Bench Board						4	03
	10b	**EP030170**	Bind Head Tapping Screw-1	3.5X14	MFZN2Y				16	01
	10c	**VT655900**	Wrench							05
	10d	**AA016480**	Holder, Leg						4	02
	10e	**EP030170**	Bind Head Tapping Screw-1	3.5X14	MFZN2Y				16	01
	20	**V2018800**	Leg Assembly	BC-XX(YMMA)					4	06
	30	**VS530500**	Screw Set							03
	30a	**EX001060**	Hexagonal Nut	#1 10X1.25	MFZN2Y			(0376125)	4	
	30b	**03765820**	Spring Washer	#2 10.0	MFZN2Y				4	01

*:New Parts

RANK:Japan only

BENCH

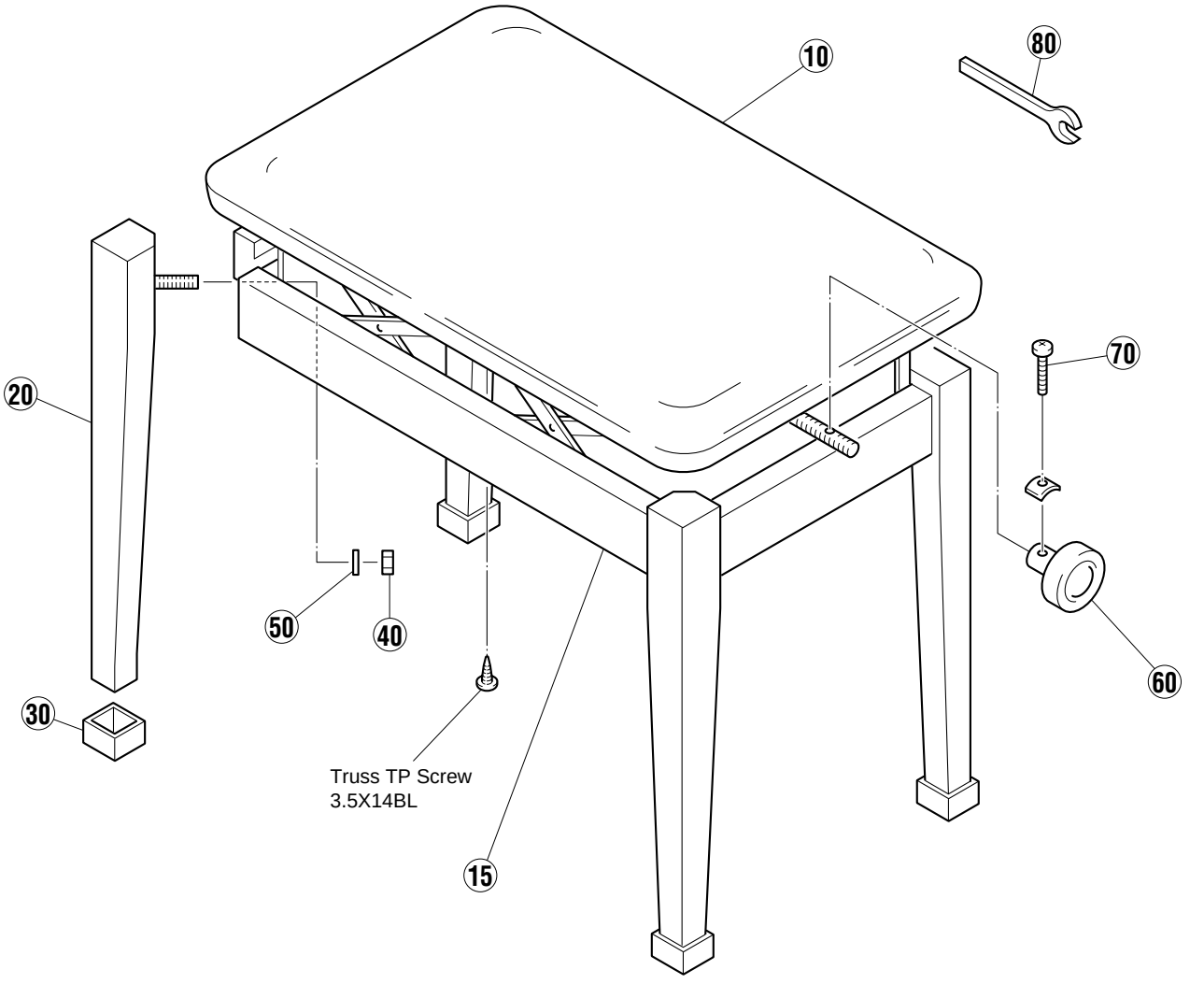

	REF NO.	PART NO.	DESCRIPTION		REMARKS	QTY	RANK
		--	BENCH	BC-15 BR	CVP-103 M (VU42180)		
*	10	**AAX01080**	Bench Board Assembly	BR			14
*	15	**AAX01090**	Lift Assembly	BR			
*	20	**AAX01100**	Leg Assembly	BR			15
*	30	**AAX01110**	Cap	BR		4	03
	40	**EX001060**	Hexagonal Nut	#1 10X1.25 MFZN2Y	(0376125)	4	01
	50	**03765820**	Spring Washer	#2 10.0 MFZN2Y		4	01
*	60	**AAX01120**	Knob	BR			01
	70	**VL064000**	Pan Head Tapping Screw-S	4.0X20 BL			01
	80	**VT655900**	Wrench				05

*:New Parts RANK:Japan only

ELECTRICAL PARTS

	REF NO.	PART NO.	DESCRIPTION			REMARKS	QTY	RANK
			ELECTRICAL PARTS			CVP-103/103M		
		VU342300	Circuit Board	AEXL88L		(XR775C0)		12
		VU342400	Circuit Board	AEXL88H		(XR776C0)		13
*		**V3150900**	Circuit Board	DM		(XV572B0)		
		- -	Circuit Board	FU60		103 J (VT15140,XQ395A0)		
		- -	Circuit Board	FU60		103 U (VT15150,XQ395A0)		
		- -	Circuit Board	FU60		103 B,E (VT15160,XQ395A0)		
		- -	Circuit Board	FU60		103 N (VT15290,XQ395A0)		
		- -	Circuit Board	FU60		103M U (VT15180,XQ395A0)		
		- -	Circuit Board	FU60		103M E,B (VT15190,XQ395A0)		
		VT478400	Circuit Board	HP		(XQ795A0,XT162A0)		10
*		**V3150700**	Circuit Board	JACK		CVP-103 (XU370D0)		
*		**AAX04850**	Circuit Board	EQ		(XU370D0)		
		- -	Circuit Board	MA60		J,U (VT14390,XQ393E0)		
		- -	Circuit Board	MA60		E,B,N (VT14400,XQ393E0)		
		VY636000	Circuit Board	MIC		CVP-103 J (XT119B0)		14
*		**V3148800**	Circuit Board	PN1A		(XV470A0)		
*		**V3148900**	Circuit Board	PN1B		(XV470A0)		
*		**V3149000**	Circuit Board	PN3A		(XV470A0)		
*		**V3149100**	Circuit Board	PN3B		(XV470A0)		
*		**V3149200**	Circuit Board	MV		(XV470A0)		
*		**V3149300**	Circuit Board	PN2		(XV471A0)		
		VN637600	Circuit Board	PL		(XL151B0)		05
*		**V3255900**	Circuit Board	NW1		(XT123B0)		
		V2337300	Circuit Board	PEDAL		(XR780B0)		
		VU342300	Circuit Board	AEXL88L		(XR775C0)		12
		XR632A00	IC	YMZ702-D		KSN2		09
		VB390400	Connector Base Post	PH- 8P TE				01
		VB390500	Connector Base Post	PH- 9P TE				03
		VB390800	Connector Base Post	PH-12P TE				01
		VB941200	Diode	1SS133,1SS176				01
		- -	Dust Proof Cloth			(VU45960)		
	C1	**FG644100**	Ceramic Capacitor-F	0.0100 50V Z				01
	-3	**FG644100**	Ceramic Capacitor-F	0.0100 50V Z				01
	C5	**VF760000**	Electrolytic Cap.-S	100.00 10.0V				01
	CL1	**VI653000**	Ceramic Resonator	CST4.00MGW040				01
	J1	**- -**	Jumper Wire	0.55		(VD04170)		
	J2	**- -**	Jumper Wire	0.55		(VD04170)		
	R1	**HF759100**	Carbon Resistor	1.0M 1/4 J				01
	R2	**HF755100**	Carbon Resistor	100.0 1/4 J				01
	R3	**HF755100**	Carbon Resistor	100.0 1/4 J				01
	R4	**HF756100**	Carbon Resistor	1.0K 1/4 J				01
	RA1	**VU483500**	Resistor Array	RGLD12X103J				01
		VU342400	Circuit Board	AEXL88H		(XR776C0)		13
		VB390500	Connector Base Post	PH- 9P TE				03
		VB390800	Connector Base Post	PH-12P TE				01
		VB941200	Diode	1SS133,1SS176				01
		- -	Dust Proof Cloth			(VU45980)		
*		**V3150900**	Circuit Board	DM		(XV572B0)		
		VK863100	IC Socket	DICF-42CS-E			5	03
	C0030	**US064100**	Ceramic Capacitor-B (chip)	0.0100 50V K				01
	C0031	**UF037100**	Electrolytic Cap. (chip)	10 16V				01
	C0101	**US064100**	Ceramic Capacitor-B (chip)	0.0100 50V K				01
	-0107	**US064100**	Ceramic Capacitor-B (chip)	0.0100 50V K				01
	C0109	**UF037100**	Electrolytic Cap. (chip)	10 16V				01
	C0110	**UF037100**	Electrolytic Cap. (chip)	10 16V				01
	C0120	**US061270**	Ceramic Capacitor-CH(chip)	27P 50V J				01
	C0121	**US061270**	Ceramic Capacitor-CH(chip)	27P 50V J				01
	C0123	**US062470**	Ceramic Capacitor-SL(chip)	470P 50V J				01
	C0124	**US135100**	Ceramic Capacitor-F (chip)	0.1000 16V Z				01
	-0127	**US135100**	Ceramic Capacitor-F (chip)	0.1000 16V Z				01
	C0128	**US064100**	Ceramic Capacitor-B (chip)	0.0100 50V K				01
	C0200	**US064100**	Ceramic Capacitor-B (chip)	0.0100 50V K				01
	-0205	**US064100**	Ceramic Capacitor-B (chip)	0.0100 50V K				01
	C0206	**UF037100**	Electrolytic Cap. (chip)	10 16V				01
	C0207	**US064100**	Ceramic Capacitor-B (chip)	0.0100 50V K				01
	-0210	**US064100**	Ceramic Capacitor-B (chip)	0.0100 50V K				01

*:New Parts

RANK:Japan only

REF NO.	PART NO.	DESCRIPTION			REMARKS	QTY	RANK
C0211	**UF037100**	Electrolytic Cap. (chip)	10 16V				01
C0212	**US064100**	Ceramic Capacitor-B (chip)	0.0100 50V K				01
C0213	**US064100**	Ceramic Capacitor-B (chip)	0.0100 50V K				01
C0214	**US061220**	Ceramic Capacitor-CH(chip)	22P 50V J				01
C0215	**US061220**	Ceramic Capacitor-CH(chip)	22P 50V J				01
C0216	**UF037100**	Electrolytic Cap. (chip)	10 16V				01
C0217	**US064100**	Ceramic Capacitor-B (chip)	0.0100 50V K				01
C0218	**US061270**	Ceramic Capacitor-CH(chip)	27P 50V J				01
C0220	**US064100**	Ceramic Capacitor-B (chip)	0.0100 50V K				01
-0225	**US064100**	Ceramic Capacitor-B (chip)	0.0100 50V K				01
C0226	**UF037100**	Electrolytic Cap. (chip)	10 16V				01
C0227	**US064100**	Ceramic Capacitor-B (chip)	0.0100 50V K				01
-0230	**US064100**	Ceramic Capacitor-B (chip)	0.0100 50V K				01
C0231	**UF037100**	Electrolytic Cap. (chip)	10 16V				01
C0232	**US064100**	Ceramic Capacitor-B (chip)	0.0100 50V K				01
C0233	**US064100**	Ceramic Capacitor-B (chip)	0.0100 50V K				01
C0240	**US064100**	Ceramic Capacitor-B (chip)	0.0100 50V K				01
C0250	**US064100**	Ceramic Capacitor-B (chip)	0.0100 50V K				01
C0260	**US064100**	Ceramic Capacitor-B (chip)	0.0100 50V K				01
C0270	**UF066100**	Electrolytic Cap. (chip)	1 50V				01
C0272	**UE038100**	Electrolytic Cap. (chip)	100 16V RV		}		01
C0272	**UF038100**	Electrolytic Cap. (chip)	100 16V				01
C0310	**US064100**	Ceramic Capacitor-B (chip)	0.0100 50V K				01
C0311	**US062100**	Ceramic Capacitor-SL(chip)	100P 50V J				01
-0317	**US062100**	Ceramic Capacitor-SL(chip)	100P 50V J				01
C0320	**UF038100**	Electrolytic Cap. (chip)	100 16V				01
C0321	**US135100**	Ceramic Capacitor-F (chip)	0.1000 16V Z				01
C0322	**UF038100**	Electrolytic Cap. (chip)	100 16V				01
C0323	**US064100**	Ceramic Capacitor-B (chip)	0.0100 50V K				01
C0330	**US064100**	Ceramic Capacitor-B (chip)	0.0100 50V K				01
C0331	**US062100**	Ceramic Capacitor-SL(chip)	100P 50V J				01
-0334	**US062100**	Ceramic Capacitor-SL(chip)	100P 50V J				01
C0350	**UF118330**	Electrolytic Cap. (chip)	330 6.3V UUR0J3				01
C0400	**US064100**	Ceramic Capacitor-B (chip)	0.0100 50V K				01
C0410	**US064100**	Ceramic Capacitor-B (chip)	0.0100 50V K				01
C0430	**US064100**	Ceramic Capacitor-B (chip)	0.0100 50V K				01
C0450	**US062100**	Ceramic Capacitor-SL(chip)	100P 50V J				01
-0452	**US062100**	Ceramic Capacitor-SL(chip)	100P 50V J				01
C0453	**US064100**	Ceramic Capacitor-B (chip)	0.0100 50V K				01
C0454	**US062100**	Ceramic Capacitor-SL(chip)	100P 50V J				01
C0455	**US064100**	Ceramic Capacitor-B (chip)	0.0100 50V K				01
C0500	**US064100**	Ceramic Capacitor-B (chip)	0.0100 50V K				01
C0501	**UF037100**	Electrolytic Cap. (chip)	10 16V				01
C0510	**US064100**	Ceramic Capacitor-B (chip)	0.0100 50V K				01
C0511	**US064100**	Ceramic Capacitor-B (chip)	0.0100 50V K				01
C0512	**VI055000**	Super Capacitor	0.100F 5.5V FYD0H				04
C0520	**US064100**	Ceramic Capacitor-B (chip)	0.0100 50V K				01
C0530	**US064100**	Ceramic Capacitor-B (chip)	0.0100 50V K				01
C0540	**US064100**	Ceramic Capacitor-B (chip)	0.0100 50V K				01
C0560	**US064100**	Ceramic Capacitor-B (chip)	0.0100 50V K				01
C0600	**US064100**	Ceramic Capacitor-B (chip)	0.0100 50V K				01
C0601	**UF038100**	Electrolytic Cap. (chip)	100 16V				01
C0610	**US064100**	Ceramic Capacitor-B (chip)	0.0100 50V K				01
C0620	**US064100**	Ceramic Capacitor-B (chip)	0.0100 50V K				01
C0650	**US064100**	Ceramic Capacitor-B (chip)	0.0100 50V K				01
C0651	**US062100**	Ceramic Capacitor-SL(chip)	100P 50V J				01
-0659	**US062100**	Ceramic Capacitor-SL(chip)	100P 50V J				01
C0660	**US064100**	Ceramic Capacitor-B (chip)	0.0100 50V K				01
C0700	**US064100**	Ceramic Capacitor-B (chip)	0.0100 50V K				01
C0701	**US064100**	Ceramic Capacitor-B (chip)	0.0100 50V K				01
C0702	**US060500**	Ceramic Capacitor-CH(chip)	5P 50V C				01
C0703	**US060500**	Ceramic Capacitor-CH(chip)	5P 50V C				01
C0704	**UF037100**	Electrolytic Cap. (chip)	10 16V				01
C0800	**UF038100**	Electrolytic Cap. (chip)	100 16V				01
C0801	**UF037100**	Electrolytic Cap. (chip)	10 16V				01
C0802	**UF037100**	Electrolytic Cap. (chip)	10 16V				01
C0803	**UF046470**	Electrolytic Cap. (chip)	4.7 25V				01
C0804	**UF037100**	Electrolytic Cap. (chip)	10 16V				01
C0805	**UF037100**	Electrolytic Cap. (chip)	10 16V				01
C0806	**UF046470**	Electrolytic Cap. (chip)	4.7 25V				01

∗:New Parts RANK:Japan only

	REF NO.	PART NO.	DESCRIPTION			REMARKS	QTY	RANK
	C0807	**US135100**	Ceramic Capacitor-F (chip)	0.1000 16V Z				01
	-0809	**US135100**	Ceramic Capacitor-F (chip)	0.1000 16V Z				01
	C0810	**US044220**	Ceramic Capacitor-B (chip)	0.0220 25V K				01
	C0812	**US044220**	Ceramic Capacitor-B (chip)	0.0220 25V K				01
	CL400	**VV905100**	Ceramic Resonator	CSTCC4.00MG0H6-TC				01
	CL600	**V2330600**	Ceramic Resonator	CSTCC10.0MG0H6-TC				01
*	CL700	**V2370300**	Ceramic Resonator	16.00M CSACV16.00				01
	CN310	**VV878700**	Connector	1.25FJ 15P TE				01
	CN320	**VZ998500**	Connector	1.25FJ 11P TE				01
	CN330	**VB390400**	Connector Base Post	PH- 8P TE				01
	CN350	**VB390300**	Connector Base Post	PH- 7P TE				01
	CN360	**VB389800**	Connector Base Post	PH- 2P TE				01
	CN450	**VB390700**	Connector Base Post	PH-11P TE				01
	CN650	**VB390800**	Connector Base Post	PH-12P TE				01
	CN750	**VQ391300**	Connector	34P TE				03
	D0030	**VB493900**	Diode	MA221				01
	D0510	**VB493900**	Diode	MA221				01
	D0511	**VB493900**	Diode	MA221				01
	IC030	**XL112A00**	IC	SN74HC132NS-R		NAND		03
*	IC100	**XV665B00**	IC	HD64F7045F28		CPU		
	IC200	**XU947B00**	IC	HG73C205FD		SWX00B		09
	IC220	**XU947B00**	IC	HG73C205FD		SWX00B		09
*	IC240	**XV662100**	IC	MB8502F016FA-12PS		FLASH ROM WAVE 1 32M		
*	IC250	**XV663100**	IC	MB8502F016FA-12PS		FLASH ROM WAVE 1 32M		
	IC260	**XU462A00**	IC	MSM514260C-60TS-K		DRAM 4M		08
	IC270	**XS516A00**	IC	UPC2933T-E1		REGULATOR +3.3V		03
*	IC400	**XV513A00**	IC	MSM82C51A-2GS-K		USART		06
	IC410	**XC724A00**	IC	SN74HC02NSR		NOR		01
	IC430	**XC723A00**	IC	SN74HCU04NSR		INVERTER		01
	IC500	**XV145A00**	IC	KM416C1200CJ-6		DRAM 16M		12
	IC500	**XV380A00**	IC	GM71C18163CJ-6(T)				12
	IC510	**XS681A00**	IC	M5M51008BFP-70LLT		SRAM 1M		11
*	IC510	**XV378A00**	IC	LP621024CM-70LL				07
*	IC510	**XV976A00**	IC	M5M51008CFP-70H				07
*	IC520	**XV659B00**	IC	M27C160-100F1		EPROM MAIN-L 16M		
*	IC530	**XV660B00**	IC	M27C160-100F1		EPROM MAIN-H 16M		
*	IC540	**XV661100**	IC	MB8502F016FA-90PS		MASK ROM STYLE 32M		
	IC560	**XE462A00**	IC	TC74HC139AF-TP1		DECODER		02
	IC600	**XQ595A00**	IC	SED1335F0B		LCDC		08
	IC610	**XN279C00**	IC	M5M5256DFP-70LL		SRAM 256K		07
	IC610	**XT090A00**	IC	SRM2B256SLMX70				07
	IC610	**XV411A00**	IC	W24258S-70LE-EL10				07
	IC620	**XC723A00**	IC	SN74HCU04NSR		INVERTER		01
	IC700	**XI939A00**	IC	HD63266F		FDC		09
	IC800	**XU829A00**	IC	PCM1716E		D/A CONVERTER		06
	IC820	**XJ598A00**	IC	NJM78L05UA		REGULATOR +5V		02
	L0310	**VR243700**	Chip Inductance	56U LEM2520 T 560J				01
	-0312	**VR243700**	Chip Inductance	56U LEM2520 T 560J				01
	L0750	**VQ724900**	Chip Inductance	BK2125HM601-T				01
	-0754	**VQ724900**	Chip Inductance	BK2125HM601-T				01
	R0001	**RD355100**	Carbon Resistor (chip)	100 63M J				01
	-0022	**RD355100**	Carbon Resistor (chip)	100 63M J				01
	R0030	**RD357100**	Carbon Resistor (chip)	10K 63M J				01
	R0031	**RD357220**	Carbon Resistor (chip)	22K 63M J				01
	R0032	**RD356100**	Carbon Resistor (chip)	1.0K 63M J				01
	R0033	**RD358470**	Carbon Resistor (chip)	470K 63M J				01
	R0034	**RD357100**	Carbon Resistor (chip)	10K 63M J				01
	R0035	**RD357220**	Carbon Resistor (chip)	22K 63M J				01
	R0036	**RD356820**	Carbon Resistor (chip)	8.2K 63M J				01
	R0037	**RD358470**	Carbon Resistor (chip)	470K 63M J				01
	R0050	**RD355100**	Carbon Resistor (chip)	100 63M J				01
	-0081	**RD355100**	Carbon Resistor (chip)	100 63M J				01
	R0100	**RD355100**	Carbon Resistor (chip)	100 63M J				01
	-0110	**RD355100**	Carbon Resistor (chip)	100 63M J				01
	R0111	**RD355680**	Carbon Resistor (chip)	680 63M J				01
	R0112	**RD355220**	Carbon Resistor (chip)	220 63M J				01
	R0113	**RD356330**	Carbon Resistor (chip)	3.3K 63M J				01
	R0114	**RD356150**	Carbon Resistor (chip)	1.5K 63M J				01
	R0115	**RD356100**	Carbon Resistor (chip)	1.0K 63M J				01
	R0116	**RD356100**	Carbon Resistor (chip)	1.0K 63M J				01

*:New Parts

RANK:Japan only

REF NO.	PART NO.	DESCRIPTION			REMARKS	QTY	RANK
R0117	**RD355100**	Carbon Resistor (chip)	100 63M J				01
-0119	**RD355100**	Carbon Resistor (chip)	100 63M J				01
R0120	**RD356100**	Carbon Resistor (chip)	1.0K 63M J				01
R0150	**RD357470**	Carbon Resistor (chip)	47K 63M J				01
-0161	**RD357470**	Carbon Resistor (chip)	47K 63M J				01
R0164	**RD357470**	Carbon Resistor (chip)	47K 63M J				01
R0165	**RD357470**	Carbon Resistor (chip)	47K 63M J				01
R0166	**RD356470**	Carbon Resistor (chip)	4.7K 63M J				01
R0167	**RD357470**	Carbon Resistor (chip)	47K 63M J				01
R0168	**RD357470**	Carbon Resistor (chip)	47K 63M J				01
R0169	**RD357100**	Carbon Resistor (chip)	10K 63M J				01
-0171	**RD357100**	Carbon Resistor (chip)	10K 63M J				01
R0172	**RD357470**	Carbon Resistor (chip)	47K 63M J				01
-0178	**RD357470**	Carbon Resistor (chip)	47K 63M J				01
R0179	**RD350000**	Carbon Resistor (chip)	0 63M J				01
R0180	**RD357100**	Carbon Resistor (chip)	10K 63M J				01
R0181	**RD355220**	Carbon Resistor (chip)	220 63M J				01
R0182	**RD357470**	Carbon Resistor (chip)	47K 63M J				01
R0190	**RD356270**	Carbon Resistor (chip)	2.7K 63M J				01
R0200	**RD355330**	Carbon Resistor (chip)	330 63M J				01
R0201	**RD357470**	Carbon Resistor (chip)	47K 63M J				01
R0202	**RD354470**	Carbon Resistor (chip)	47 63M J				01
R0203	**RD354680**	Carbon Resistor (chip)	68 63M J				01
R0227	**RD357470**	Carbon Resistor (chip)	47K 63M J				01
R0228	**RD354470**	Carbon Resistor (chip)	47 63M J				01
R0310	**RD355100**	Carbon Resistor (chip)	100 63M J				01
-0313	**RD355100**	Carbon Resistor (chip)	100 63M J				01
R0314	**RD357470**	Carbon Resistor (chip)	47K 63M J				01
-0316	**RD357470**	Carbon Resistor (chip)	47K 63M J				01
R0317	**RD358470**	Carbon Resistor (chip)	470K 63M J				01
R0320	**RD355100**	Carbon Resistor (chip)	100 63M J				01
R0330	**RD355100**	Carbon Resistor (chip)	100 63M J				01
-0333	**RD355100**	Carbon Resistor (chip)	100 63M J				01
R0360	**RD254330**	Carbon Resistor (chip)	33.0 0.1 J				01
-0369	**RD254330**	Carbon Resistor (chip)	33.0 0.1 J				01
R0410	**RD355100**	Carbon Resistor (chip)	100 63M J				01
R0451	**RD355100**	Carbon Resistor (chip)	100 63M J				01
-0453	**RD355100**	Carbon Resistor (chip)	100 63M J				01
R0454	**RD359100**	Carbon Resistor (chip)	1.0M 63M J				01
R0455	**RD354680**	Carbon Resistor (chip)	68 63M J				01
R0456	**RD255680**	Carbon Resistor (chip)	680.0 0.1 J				01
R0510	**RD255470**	Carbon Resistor (chip)	470.0 0.1 J				01
R0511	**RD355100**	Carbon Resistor (chip)	100 63M J				01
-0565	**RD355100**	Carbon Resistor (chip)	100 63M J				01
R0620	**RD359100**	Carbon Resistor (chip)	1.0M 63M J				01
R0621	**RD354680**	Carbon Resistor (chip)	68 63M J				01
R0651	**RD355100**	Carbon Resistor (chip)	100 63M J				01
-0660	**RD357100**	Carbon Resistor (chip)	10K 63M J				01
R0661	**RD350000**	Carbon Resistor (chip)	0 63M J				01
R0662	**RD350000**	Carbon Resistor (chip)	0 63M J				01
R0700	**RD357100**	Carbon Resistor (chip)	10K 63M J				01
R0701	**RD356100**	Carbon Resistor (chip)	1.0K 63M J				01
R0750	**RD357100**	Carbon Resistor (chip)	10K 63M J				01
R0751	**RD356100**	Carbon Resistor (chip)	1.0K 63M J				01
R0752	**RD355330**	Carbon Resistor (chip)	330 63M J				01
R0753	**RD356100**	Carbon Resistor (chip)	1.0K 63M J				01
R0754	**RD355330**	Carbon Resistor (chip)	330 63M J				01
-0757	**RD355330**	Carbon Resistor (chip)	330 63M J				01
R0758	**RD356100**	Carbon Resistor (chip)	1.0K 63M J				01
R0759	**RD356100**	Carbon Resistor (chip)	1.0K 63M J				01
R0760	**RD356100**	Carbon Resistor (chip)	1.0K 63M J				01
R0761	**RD355330**	Carbon Resistor (chip)	330 63M J				01
R0802	**RD355220**	Carbon Resistor (chip)	220 63M J				01
R0804	**RD355220**	Carbon Resistor (chip)	220 63M J				01
R0810	**RD357100**	Carbon Resistor (chip)	10K 63M J				01
* SW001	**V3026900**	Switch	CHS-01 TA1				
TR030	**VV556400**	Transistor	2SC2412K Q,R,S				01
TR031	**VJ927200**	Transistor	2SA1162 O,Y				01
TR650	**VV556400**	Transistor	2SC2412K Q,R,S				01
X1	**VV335600**	Quartz Crystal Unit	33.8688M DSO751S				06

*:New Parts

RANK:Japan only

	REF NO.	PART NO.	DESCRIPTION			REMARKS	QTY	RANK
	XL100	**VV762900**	Quartz Crystal Unit	7M SMD-49				03
	ZD510	**VU172000**	Zener Diode	UDZS5.6BTE-17 5.6V				01
	ZD630	**VU172800**	Zener Diode	UDZ 12B TE-17 12V				01
		- -	Circuit Board	FU60		103 J (VT15140,XQ395A0)		
		- -	Circuit Board	FU60		103 U (VT15150,XQ395A0)		
		- -	Circuit Board	FU60		103 B,E (VT15160,XQ395A0)		
		- -	Circuit Board	FU60		103 N (VT15290,XQ395A0)		
		- -	Circuit Board	FU60		103M U (VT15180,XQ395A0)		
		- -	Circuit Board	FU60		103M E,B (VT15190,XQ395A0)		
		VT308100	AC Inlet	CCT9302-0101M 2P		J,B,E		02
		VT308200	AC Inlet	CCT9302-0201 2P		U		02
		LB201530	Fuse Holder	PC-PH1			2	01
		VD041700	Jumper Wire	0.55				03
⚠	C0001	**VT575200**	Capacitor-KC	0.01 400V J.U.C.S				01
⚠	C0002	**FI383470**	Capacitor	4700P 400V U.C.S.V				01
⚠	C0003	**FI383470**	Capacitor	4700P 400V U.C.S.V				01
	CN001	**LB932030**	Base Post Connector	VH- 3P TE				01
	CN002	**LB932060**	Base Post Connector	VH- 6P TE				01
⚠	F0001	**KB003060**	Fuse	1.60A S		E,B		01
⚠	F0001	**KB003590**	Fuse	3.00A JU		J,U,N		01
⚠	F0002	**KB003060**	Fuse	1.60A S		N		01
⚠	F0003	**KB003060**	Fuse	1.60A S		N		01
	J0001	**- -**	Jumper Wire	0.55		(VD04170)		
	L0001	**- -**	Jumper Wire	0.55		(VD04170)		
	L0002	**- -**	Jumper Wire	0.55		(VD04170)		
	L0003	**VF790900**	Coil	SU10V-D20010 10uH				03
		VT478400	Circuit Board	HP		(XQ795A0,XT162A0)		10
		- -	Jumper Wire	0.55		(VD04170)	4	
	C1	**VE659000**	Semiconductive Cera. Cap.	0.1000 25V Z				01
	-5	**VE659000**	Semiconductive Cera. Cap.	0.1000 25V Z				01
	C6	**- -**	Jumper Wire	0.55		(VD04170)		
	C7	**- -**	Jumper Wire	0.55		(VD04170)		
	CN1	**VB858600**	Connector Base Post	PH- 7P SE				01
	CN2	**VB858100**	Connector Base Post	PH- 2P SE				01
	CN3	**LB919020**	Base Post Connector	XH 2P SE				01
	FL1	**VB971100**	Coil	FL5R200QN 20uH				01
	-6	**VB971100**	Coil	FL5R200QN 20uh				01
	HP1	**LB101870**	Phone Jack	YKB21-5006		PHONES		03
	HP2	**LB101870**	Phone Jack	YKB21-5006		PHONES		03
	R1	**VK992200**	Carbon Resistor	68.0 1/2 J				01
	-4	**VK992200**	Carbon Resistor	68.0 1/2 J				01
	R5	**- -**	Jumper Wire	0.55		(VD04170)		
*		**V3150700**	Circuit Board	JACK		(XU370D0)		
*		**AAX04850**	Circuit Board	EQ		(XU370D0)		
		VT967700	Support, PCB	WLS-20-0			3	01
		- -	Jumper Wire	0.55		(VD04170)	63	
		- -	Connector Assembly	EQ		(V209610)		
	C0001	**UR838100**	Electrolytic Cap.	100.00 16.0V				01
	C0002	**UR838100**	Electrolytic Cap.	100.00 16.0V				01
	C0003	**FG644100**	Ceramic Capacitor-F	0.0100 50V Z				01
	C0100	**FG644100**	Ceramic Capacitor-F	0.0100 50V Z				01
	-0102	**FG644100**	Ceramic Capacitor-F	0.0100 50V Z				01
	C0103	**UR837100**	Electrolytic Cap.	10.00 16.0V				01
	C0104	**FG644100**	Ceramic Capacitor-F	0.0100 50V Z				01
	C0105	**VC694800**	Semiconductive Cera. Cap.	0.1000 25V Z				01
	C0106	**UR837470**	Electrolytic Cap.	47.00 16.0V				01
	C0107	**FG644100**	Ceramic Capacitor-F	0.0100 50V Z				01
	C0200	**UN866470**	Electrolytic Cap.-BP	4.70 50.0V				01
	C0201	**UN866470**	Electrolytic Cap.-BP	4.70 50.0V				01
	C0202	**FG651470**	Ceramic Capacitor-SL	47P 50V J				01
	C0203	**FG651470**	Ceramic Capacitor-SL	47P 50V J				01
	C0204	**FG651390**	Ceramic Capacitor-SL	39P 50V J				01
	C0205	**FG651390**	Ceramic Capacitor-SL	39P 50V J				01
	C0206	**FG651680**	Ceramic Capacitor-SL	68P 50V J				01
	C0207	**FG651680**	Ceramic Capacitor-SL	68P 50V J				01
	C0208	**UA355100**	Mylar Capacitor	0.1000 50V J		}		01
	C0208	**VR168300**	Monolithic Mylar Capacitor	ECQ-V1H104JL3		}		01

*:New Parts

RANK:Japan only

REF NO.	PART NO.	DESCRIPTION			REMARKS	QTY	RANK
C0209	**UA355100**	Mylar Capacitor	0.1000 50V J		}		01
C0209	**VR168300**	Monolithic Mylar Capacitor	ECQ-V1H104JL3				01
C0210	**UN847470**	Electrolytic Cap.-BP	47.00 25.0V				01
-0213	**UN847470**	Electrolytic Cap.-BP	47.00 25.0V				01
C0214	**FG644100**	Ceramic Capacitor-F	0.0100 50V Z				01
-0219	**FG644100**	Ceramic Capacitor-F	0.0100 50V Z				01
C0301	**UA954820**	Mylar Capacitor	0.0820 50V J		}		01
C0301	**UA354820**	Mylar Capacitor	0.0820 50V J				01
C0302	**VE326500**	Monolithic Mylar Capacitor	0.27 50V J				01
C0303	**VE326300**	Monolithic Mylar Capacitor	0.18 50V J				01
C0304	**UA954330**	Mylar Capacitor	0.0330 50V J				01
C0305	**UA654470**	Mylar Capacitor	0.0470 50V J				01
C0306	**UA954150**	Mylar Capacitor	0.0150 50V J				01
C0307	**UA354560**	Mylar Capacitor	0.0560 50V J				01
C0308	**UA353680**	Mylar Capacitor	6800P 50V J				01
C0309	**UA953560**	Mylar Capacitor	5600P 50V J				01
C0310	**UA952100**	Mylar Capacitor	100P 50V J				01
C0311	**UA354820**	Mylar Capacitor	0.0820 50V J				01
C0312	**VE326500**	Monolithic Mylar Capacitor	0.27 50V J				01
C0313	**VE326300**	Monolithic Mylar Capacitor	0.18 50V J				01
C0314	**UA954330**	Mylar Capacitor	0.0330 50V J				01
C0315	**UA654470**	Mylar Capacitor	0.0470 50V J				01
C0316	**UA954150**	Mylar Capacitor	0.0150 50V J				01
C0317	**UA354560**	Mylar Capacitor	0.0560 50V J				01
C0318	**UA353680**	Mylar Capacitor	6800P 50V J				01
C0319	**UA953560**	Mylar Capacitor	5600P 50V J				01
C0320	**UA952100**	Mylar Capacitor	100P 50V J				01
C0321	**FG612560**	Ceramic Capacitor-B	560P 50V K				01
C0322	**FG644100**	Ceramic Capacitor-F	0.0100 50V Z				01
C0323	**FG644100**	Ceramic Capacitor-F	0.0100 50V Z				01
C0324	**FG612560**	Ceramic Capacitor-B	560P 50V K				01
C0325	**FG644100**	Ceramic Capacitor-F	0.0100 50V Z				01
C0326	**FG644100**	Ceramic Capacitor-F	0.0100 50V Z				01
CA001	**VK994900**	Ceramic Capacitor Array	100P 50V M				01
CN001	**VV878800**	Connector Plug	1.25FJ 15P TE				02
CN002	**V0000200**	Connector Plug	1.25FJ 11P TE				02
CN003	**VB390400**	Connector Base Post	PH- 8P TE				01
CN004	**VB390000**	Connector Base Post	PH- 4P TE				01
CN006	**VB390500**	Connector Base Post	PH- 9P TE				03
CN007	**VB390300**	Connector Base Post	PH- 7P TE				01
D0001	**VD631600**	Diode	1SS133,176,HSS104				01
D0002	**VF195600**	Diode	11ES4 TA1				01
IC001	**IG142250**	IC	SN74HCU04N		INVERTER		01
IC002	**VD473200**	Photo Coupler	6N137				05
IC003	**XU463A00**	IC	SN75C1168N		LINE TRANSCEIVER		05
IC004	**XB247A00**	IC	UPC4570HA		OP AMP		02
IC005	**XM804A00**	IC	LA6517		OP AMP		04
IC006	**XB247A00**	IC	UPC4570HA		OP AMP		02
IC007	**XF751A00**	IC	M5227P		EQUALIZER		04
IC008	**XF751A00**	IC	M5227P		EQUALIZER		04
JK001	**VT202500**	DIN Connector	JACK 5P YKF51-50		MIDI IN/OUT/THRU		01
-003	**VT202500**	DIN Connector	JACK 5P YKF51-50				01
JK004	**VM761000**	DIN Connector	DIN JACK8P MD-S810		PEDAL		03
JK005	**VZ743800**	DIN Connector	DIN JACK6P MD-S610		TO HOST		02
JK006	**VS115400**	Phone Jack	JACK LGR4609-7000		AUX IN (R,L/L+R),		01
-009	**VS115400**	Phone Jack	JACK LGR4609-7000		AUX OUT (R,L/L+R)		01
L0100	**VB971100**	Choke Coil	R-5C.20uH				01
-0105	**VB971100**	Choke Coil	R-5C.20uH				01
L0106	**GE300670**	Ferrite Bead	BL02RN2-R62T4				02
-0108	**GE300670**	Ferrite Bead	BL02RN2-R62T4				02
L0109	**GE300670**	Ferrite Bead	BL02RN2-R62T4				02
-0111	**GE300670**	Ferrite Bead	BL02RN2-R62T4				02
L0112	**GE300670**	Ferrite Bead	BL02RN2-R62T4				02
L0113	**VB835000**	Coil	FL5R200QNT 20uH				01
-0116	**VB835000**	Coil	FL5R200QNT 20uH				01
L0200	**VT733400**	Coil	SBT-0210T 10uH				02
-0204	**VT733400**	Coil	SBT-0210T 10uH				02
L0205	**- -**	Jumper Wire	0.55		(VD04170)		
L0206	**VT733400**	Coil	SBT-0210T 10uH		}		02
L0206	**V3085000**	Choke Coil	R-5C.10uH				

*:New Parts

RANK:Japan only

REF NO.	PART NO.	DESCRIPTION			REMARKS	QTY	RANK
L0207	- -	Jumper Wire	0.55		(VD04170)		
R0001	**HF756100**	Carbon Resistor	1.0K 1/4 J				01
R0002	**HF757100**	Carbon Resistor	10.0K 1/4 J				01
R0003	**HF756100**	Carbon Resistor	1.0K 1/4 J				01
R0004	**HF756470**	Carbon Resistor	4.7K 1/4 J				01
R0100	**HF756100**	Carbon Resistor	1.0K 1/4 J				01
R0101	**HF755220**	Carbon Resistor	220.0 1/4 J				01
-0103	**HF755220**	Carbon Resistor	220.0 1/4 J				01
R0104	**HF757220**	Carbon Resistor	22.0K 1/4 J				01
R0105	**HF756150**	Carbon Resistor	1.5K 1/4 J				01
R0106	**HF757100**	Carbon Resistor	10.0K 1/4 J				01
R0107	**HF757220**	Carbon Resistor	22.0K 1/4 J				01
R0108	**HF755220**	Carbon Resistor	220.0 1/4 J				01
R0109	**HF755220**	Carbon Resistor	220.0 1/4 J				01
R0110	**HF757220**	Carbon Resistor	22.0K 1/4 J				01
R0111	**HF756150**	Carbon Resistor	1.5K 1/4 J				01
R0112	**HF757100**	Carbon Resistor	10.0K 1/4 J				01
R0113	**HF757100**	Carbon Resistor	10.0K 1/4 J				01
R0114	**HF757100**	Carbon Resistor	10.0K 1/4 J				01
R0115	**HF755220**	Carbon Resistor	220.0 1/4 J				01
R0116	**HF755220**	Carbon Resistor	220.0 1/4 J				01
R0117	**HF757100**	Carbon Resistor	10.0K 1/4 J				01
-0121	**HF757100**	Carbon Resistor	10.0K 1/4 J				01
R0122	**HF756330**	Carbon Resistor	3.3K 1/4 J				01
R0123	**HF757100**	Carbon Resistor	10.0K 1/4 J				01
R0124	**HF757100**	Carbon Resistor	10.0K 1/4 J				01
R0200	**HF757100**	Carbon Resistor	10.0K 1/4 J				01
R0201	**HF757120**	Carbon Resistor	12.0K 1/4 J				01
R0202	**HF757100**	Carbon Resistor	10.0K 1/4 J				01
R0203	**HF757120**	Carbon Resistor	12.0K 1/4 J				01
R0204	**HF757470**	Carbon Resistor	47.0K 1/4 J				01
R0205	**HF757470**	Carbon Resistor	47.0K 1/4 J				01
R0206	**HF757270**	Carbon Resistor	27.0K 1/4 J				01
R0207	**HF757120**	Carbon Resistor	12.0K 1/4 J				01
R0208	**HF757560**	Carbon Resistor	56.0K 1/4 J				01
R0209	**HF754330**	Carbon Resistor	33.0 1/4 J				01
R0210	**HF757270**	Carbon Resistor	27.0K 1/4 J				01
R0211	**HF757120**	Carbon Resistor	12.0K 1/4 J				01
R0212	**HF757560**	Carbon Resistor	56.0K 1/4 J				01
R0213	**HF754330**	Carbon Resistor	33.0 1/4 J				01
-0217	**HF757330**	Carbon Resistor	33.0K 1/4 J				01
R0218	**HF755680**	Carbon Resistor	680.0 1/4 J				01
R0219	**HF756470**	Carbon Resistor	4.7K 1/4 J				01
R0220	**HF756470**	Carbon Resistor	4.7K 1/4 J				01
R0221	**HF755680**	Carbon Resistor	680.0 1/4 J				01
R0222	- -	Jumper Wire	0.55		(VD04170)		
R0223	- -	Jumper Wire	0.55		(VD04170)		
R0225	**HF757120**	Carbon Resistor	12.0K 1/4 J				01
R0226	**HF757120**	Carbon Resistor	12.0K 1/4 J				01
R0227	**HF756150**	Carbon Resistor	1.5K 1/4 J				01
R0228	**HF756150**	Carbon Resistor	1.5K 1/4 J				01
R0229	**HF756150**	Carbon Resistor	1.5K 1/4 J				01
R0230	**HF756150**	Carbon Resistor	1.5K 1/4 J				01
R0301	**HF756150**	Carbon Resistor	1.5K 1/4 J				01
R0302	**HF757180**	Carbon Resistor	18.0K 1/4 J				01
R0303	**HF756150**	Carbon Resistor	1.5K 1/4 J				01
R0304	**HF757180**	Carbon Resistor	18.0K 1/4 J				01
R0305	**HF756150**	Carbon Resistor	1.5K 1/4 J				01
R0306	**HF757180**	Carbon Resistor	18.0K 1/4 J				01
R0307	**HF756560**	Carbon Resistor	5.6K 1/4 J				01
R0308	**HF757150**	Carbon Resistor	15.0K 1/4 J				01
R0309	**HF757180**	Carbon Resistor	18.0K 1/4 J				01
R0310	**HF756120**	Carbon Resistor	1.2K 1/4 J				01
R0311	**HF756150**	Carbon Resistor	1.5K 1/4 J				01
R0312	**HF757180**	Carbon Resistor	18.0K 1/4 J				01
R0313	**HF756150**	Carbon Resistor	1.5K 1/4 J				01
R0314	**HF757180**	Carbon Resistor	18.0K 1/4 J				01
R0315	**HF756150**	Carbon Resistor	1.5K 1/4 J				01
R0316	**HF757180**	Carbon Resistor	18.0K 1/4 J				01
R0317	**HF756560**	Carbon Resistor	5.6K 1/4 J				01

⋆:New Parts

RANK:Japan only

REF NO.	PART NO.	DESCRIPTION			REMARKS	QTY	RANK
R0318	**HF757150**	Carbon Resistor	15.0K 1/4 J				01
R0319	**HF757180**	Carbon Resistor	18.0K 1/4 J				01
R0320	**HF756120**	Carbon Resistor	1.2K 1/4 J				01
R0321	**HF756470**	Carbon Resistor	4.7K 1/4 J				01
R0322	**HF756470**	Carbon Resistor	4.7K 1/4 J				01
R0323	**HF756330**	Carbon Resistor	3.3K 1/4 J				01
R0324	**HF756330**	Carbon Resistor	3.3K 1/4 J				01
RY001	**KC001900**	Relay	DC RY12W 12V				07
RY002	**KC001900**	Relay	DC RY12W 12V				07
SW001	**VQ665200**	Slide Switch	SSSF144-S06N-0		HOST SELECT		03
TR001	**IC174070**	Transistor	2SC1740S R,S				01
-005	**IC174070**	Transistor	2SC1740S R,S				01
	--	Circuit Board	MA60		J,U (VT14390,XQ393E0)		
	--	Circuit Board	MA60		E,B,N (VT14400,XQ393E0)		
	VT443500	Support, PCB	T=8				03
	VT740000	Support, PCB	3T-9 T=9			3	03
	VJ834500	Insulation Sheet	#1000				03
	--	Jumper Wire	0.55		(VD04170)	30	
C0001	**VA302600**	Ceramic Capacitor-E	0.0100 500V P				01
C0003	**VU642700**	Electrolytic Cap.	4700 16.0V				03
C0004	**VU642700**	Electrolytic Cap.	4700 16.0V				03
C0005	**VL232400**	Electrolytic Cap.	3300 35.0V				04
-0008	**VL232400**	Electrolytic Cap.	3300 35.0V				04
C0009	**UR866100**	Electrolytic Cap.	1.00 50.0V				01
-0011	**UR866100**	Electrolytic Cap.	1.00 50.0V				01
C0012	**FG613100**	Ceramic Capacitor-B	1000P 50V K				01
C0013	**UR838100**	Electrolytic Cap.	100.00 16.0V				01
C0016	**UR866100**	Electrolytic Cap.	1.00 50.0V				01
C0017	**VC694800**	Semiconductive Cera. Cap.	0.1000 25V Z				01
C0018	**UR866100**	Electrolytic Cap.	1.00 50.0V				01
C0019	**UR866100**	Electrolytic Cap.	1.00 50.0V				01
C0020	**UR868100**	Electrolytic Cap.	100.00 50.0V				01
C0021	**UR868100**	Electrolytic Cap.	100.00 50.0V				01
C0022	**FG613100**	Ceramic Capacitor-B	1000P 50V K				01
C0023	**UR866100**	Electrolytic Cap.	1.00 50.0V				01
C0024	**UR838100**	Electrolytic Cap.	100.00 16.0V				01
C0025	**VC694800**	Semiconductive Cera. Cap.	0.1000 25V Z				01
C0026	**VC694800**	Semiconductive Cera. Cap.	0.1000 25V Z				01
C0027	**FG613100**	Ceramic Capacitor-B	1000P 50V K				01
C0028	**UR866100**	Electrolytic Cap.	1.00 50.0V				01
C0029	**UR838100**	Electrolytic Cap.	100.00 16.0V				01
C0030	**VC694800**	Semiconductive Cera. Cap.	0.1000 25V Z				01
C0031	**VC694800**	Semiconductive Cera. Cap.	0.1000 25V Z				01
C0032	**UR838100**	Electrolytic Cap.	100.00 16.0V				01
C0033	**UR866330**	Electrolytic Cap.	3.30 50.0V				01
CN001	**LB932050**	Base Post Connector	VH- 5P TE				01
CN003	**LB918030**	Base Post Connector	XH 3P TE				01
CN004	**VB390300**	Connector Base Post	PH- 7P TE				01
CN005	**LB932040**	Base Post Connector	VH- 4P TE				01
CN006	**VB390500**	Connector Base Post	PH- 9P TE				03
D0001	**VB481900**	Diode	11ES4				01
-0005	**VB481900**	Diode	11ES4				01
DB001	**VK421800**	Diode Stack	D5SBA20 6.0A 200V				03
DB002	**VQ111500**	Diode Stack	D3SBA20-4103 4.0A				03
⚠ F0001	**KB003240**	Fuse	5.00A S		E,B,N		01
⚠ -0003	**KB003240**	Fuse	5.00A S		E,B,N		01
⚠ F0001	**KB003630**	Fuse	5.00A		J,U		01
⚠ -0003	**KB003630**	Fuse	5.00A		J,U		01
⚠ FUHOL	**VP206500**	Fuse Holder	EYF-52BC			6	01
IC001	**XQ437A00**	IC	SI-3051N		REGULATOR +5V		03
IC002	**XQ667A00**	IC	M5237L		REGULATOR +5V		02
IC003	**XJ602A00**	IC	NJM78M12FA		REGULATOR +12V 5A		02
IC004	**XD343A00**	IC	NJM79M12FA		REGULATOR -12V		03
IC005	**XL972A00**	IC	STK401-040		POWER AMPLIFIER		08
J0003	**--**	Jumper Wire	0.55		(VD04170)		
J0004	**--**	Jumper Wire	0.55		(VD04170)		
R0003	**HF756100**	Carbon Resistor	1.0K 1/4 J				01
R0004	**HF755220**	Carbon Resistor	220.0 1/4 J				01
R0005	**HF754560**	Carbon Resistor	56.0 1/4 J				01

∗:New Parts RANK:Japan only

REF NO.	PART NO.	DESCRIPTION				QTY	RANK
R0006	**HF757100**	Carbon Resistor	10.0K 1/4 J				01
R0007	**HF756330**	Carbon Resistor	3.3K 1/4 J				01
R0008	**HW095100**	Fuse Resistor	100.0 1/4 J				01
R0009	**HW095100**	Fuse Resistor	100.0 1/4 J				01
R0010	**HF755560**	Carbon Resistor	560.0 1/4 J				01
R0011	**HF757100**	Carbon Resistor	10.0K 1/4 J				01
R0012	**HF755560**	Carbon Resistor	560.0 1/4 J				01
R0013	**HF757100**	Carbon Resistor	10.0K 1/4 J				01
R0014	**VC742500**	Metal Oxide Film Resistor	10.0 1W J				01
R0015	**HF757100**	Carbon Resistor	10.0K 1/4 J				01
R0016	**HF755560**	Carbon Resistor	560.0 1/4 J				01
R0017	**HF757100**	Carbon Resistor	10.0K 1/4 J				01
R0018	**HF755560**	Carbon Resistor	560.0 1/4 J				01
R0019	**HF757100**	Carbon Resistor	10.0K 1/4 J				01
R0020	**VC742500**	Metal Oxide Film Resistor	10.0 1W J				01
R0021	**HF757100**	Carbon Resistor	10.0K 1/4 J				01
R0022	**HF756330**	Carbon Resistor	3.3K 1/4 J				01
R0023	**HF756330**	Carbon Resistor	3.3K 1/4 J				01
RY001	**VK881200**	Relay	DC G5Z-2A-YA 12V				04
TR001	**VJ828100**	Transistor	2SA1451 O.Y				04
TR002	**IC1815M0**	Transistor	2SC1815 Y,GR				01
-004	**IC1815M0**	Transistor	2SC1815 Y,GR				01
	VY636000	Circuit Board	MIC		CVP-103 J (XT119B0)		14
	LB101870	Phone Jack	YKB21-5006		MIC.		03
	VY643900	Rotary Variable Resistor	B10.0K RK097232000		VOLUME (MIC/ECHO)		06
	- -	Jumper Wire	0.55		(VD04170)		
C01	**UB013100**	Monolithic Ceramic Cap.	B 1000P 50V K				01
C02	**UB044100**	Monolithic Ceramic Cap.	F 0.010 50V Z				01
C03	**UB044100**	Monolithic Ceramic Cap.	F 0.010 50V Z				01
C04	**UB245100**	Monolithic Ceramic Cap.	F 0.100 25V Z				01
C05	**UR865470**	Electrolytic Cap.	0.47 50.0V				01
C06	**UR865470**	Electrolytic Cap.	0.47 50.0V				01
C07	**UB245100**	Monolithic Ceramic Cap.	F 0.100 25V Z				01
C08	**UB245100**	Monolithic Ceramic Cap.	F 0.100 25V Z				01
C09	**UR865470**	Electrolytic Cap.	0.47 50.0V				01
C10	**UB012820**	Monolithic Ceramic Cap.	B 820P 50V K				01
C11	**UB044150**	Monolithic Ceramic Cap.	F 0.015 50V Z				01
C12	**UB013560**	Monolithic Ceramic Cap.	B 5600P 50V K				01
C13	**UB012680**	Monolithic Ceramic Cap.	B 680P 50V K				01
C14	**UR867220**	Electrolytic Cap.	22.00 50.0V				01
C15	**UB245100**	Monolithic Ceramic Cap.	F 0.100 25V Z				01
C16	**UR865470**	Electrolytic Cap.	0.47 50.0V				01
C17	**UB013560**	Monolithic Ceramic Cap.	B 5600P 50V K				01
C18	**UB044150**	Monolithic Ceramic Cap.	F 0.015 50V Z				01
C19	**UB012820**	Monolithic Ceramic Cap.	B 820P 50V K				01
C20	**UB013220**	Monolithic Ceramic Cap.	B 2200P 50V K				01
C21	**UB245100**	Monolithic Ceramic Cap.	F 0.100 25V Z				01
C22	**UR828100**	Electrolytic Cap.	100.00 10.0V				01
C23	**UR865470**	Electrolytic Cap.	0.47 50.0V				01
C24	**UB013100**	Monolithic Ceramic Cap.	B 1000P 50V K				01
C25	**UR865470**	Electrolytic Cap.	0.47 50.0V				01
C26	**UB245100**	Monolithic Ceramic Cap.	F 0.100 25V Z				01
C27	**UB245100**	Monolithic Ceramic Cap.	F 0.100 25V Z				01
CL1	**VJ958100**	Ceramic Resonator	CSB455E				03
CN01	**VB858300**	Connector Base Post	PH- 4P SE				01
D01	**VU171900**	Zener Diode	UDZS5.1BTE-17 5.1V				01
FL1	**VR243700**	Chip Inductance	56U LEM2520 T 560J				01
FL2	**- -**	Jumper Wire	0.55		(VD04170)		
IC01	**XT129A00**	IC	BA7725FS-E2		COMPANDER		05
IC02	**XT130A00**	IC	BU9252F-E2		DIGITAL DELAY		05
IC03	**XJ597A00**	IC	NJM78L09A		REGULATOR +9V		01
JP	**RD250000**	Carbon Resistor (chip)	0.0 0.0 J				01
R01	**RD256330**	Carbon Resistor (chip)	3.3K 0.1 J				01
R03	**RD256220**	Carbon Resistor (chip)	2.2K 0.1 J				01
R04	**RD257100**	Carbon Resistor (chip)	10.0K 0.1 J				01
R05	**RD256470**	Carbon Resistor (chip)	4.7K 0.1 J				01
R06	**RD256390**	Carbon Resistor (chip)	3.9K 0.1 J				01
R07	**RD257560**	Carbon Resistor (chip)	56.0K 0.1 J				01
R08	**RD257100**	Carbon Resistor (chip)	10.0K 0.1 J				01

⋆:New Parts RANK:Japan only

	REF NO.	PART NO.	DESCRIPTION			REMARKS	QTY	RANK
	-11	**RD257100**	Carbon Resistor (chip)	10.0K 0.1 J				01
	R12	**RD257560**	Carbon Resistor (chip)	56.0K 0.1 J				01
	R13	**RD257330**	Carbon Resistor (chip)	33.0K 0.1 J				01
	R14	**RD257100**	Carbon Resistor (chip)	10.0K 0.1 J				01
	-16	**RD257100**	Carbon Resistor (chip)	10.0K 0.1 J				01
	R17	**RD255330**	Carbon Resistor (chip)	330.0 0.1 J				01
*		**V3148800**	Circuit Board	PN1A		(XV470A0)		
*		**V3148900**	Circuit Board	PN1B		(XV470A0)		
*		**V3149000**	Circuit Board	PN3A		(XV470A0)		
*		**V3149100**	Circuit Board	PN3B		(XV470A0)		
*		**V3149200**	Circuit Board	MV		(XV470A0)		
		--	Jumper Wire	0.55		(VA07890)	88	
	CN111	**VC166500**	Connector Base Post	PH-12P SE				01
	CN121	**VB858900**	Connector Base Post	PH-10P SE				01
	CN130	**VC166500**	Connector Base Post	PH-12P SE				01
	CN131	**VC166500**	Connector Base Post	PH-12P SE				01
	CN140	**VB858200**	Connector Base Post	PH- 3P SE				01
	CN141	**VB858200**	Connector Base Post	PH- 3P SE				01
	CN150	**VB858700**	Connector Base Post	PH- 8P SE				01
	CN311	**VB858800**	Connector Base Post	PH- 9P SE				01
	CN321	**VB858900**	Connector Base Post	PH-10P SE				01
	CN330	**VC166500**	Connector Base Post	PH-12P SE				01
	CN331	**VC166500**	Connector Base Post	PH-12P SE				01
	CW150	**--**	GND Wire			(VT73360)		
	D000	**VB941200**	Diode	1SS133,1SS176				01
	-002	**VB941200**	Diode	1SS133,1SS176				01
	D007	**VB941200**	Diode	1SS133,1SS176				01
	-009	**VB941200**	Diode	1SS133,1SS176				01
	D100	**VB941200**	Diode	1SS133,1SS176				01
	-102	**VB941200**	Diode	1SS133,1SS176				01
	D107	**VB941200**	Diode	1SS133,1SS176				01
	-109	**VB941200**	Diode	1SS133,1SS176				01
	D200	**VB941200**	Diode	1SS133,1SS176				01
	-202	**VB941200**	Diode	1SS133,1SS176				01
	D207	**VB941200**	Diode	1SS133,1SS176				01
	-302	**VB941200**	Diode	1SS133,1SS176				01
	D307	**VB941200**	Diode	1SS133,1SS176				01
	-402	**VB941200**	Diode	1SS133,1SS176				01
	D407	**VB941200**	Diode	1SS133,1SS176				01
	-502	**VB941200**	Diode	1SS133,1SS176				01
	D507	**VB941200**	Diode	1SS133,1SS176				01
	-602	**VB941200**	Diode	1SS133,1SS176				01
	D608	**VB941200**	Diode	1SS133,1SS176				01
	D609	**VB941200**	Diode	1SS133,1SS176				01
	D701	**VB941200**	Diode	1SS133,1SS176				01
	D702	**VB941200**	Diode	1SS133,1SS176				01
	D708	**VB941200**	Diode	1SS133,1SS176				01
	D709	**VB941200**	Diode	1SS133,1SS176				01
	D801	**VB941200**	Diode	1SS133,1SS176				01
	D802	**VB941200**	Diode	1SS133,1SS176				01
	D808	**VB941200**	Diode	1SS133,1SS176				01
	D908	**VB941200**	Diode	1SS133,1SS176				01
	LD000	**VT425100**	LED	SLZ-190B-17-T1 RE		8 BEAT,JAZZ		01
	-002	**VT425100**	LED	SLZ-190B-17-T1 RE		INTRO		01
	LD004	**VT425100**	LED	SLZ-190B-17-T1 RE		PIANO		01
	LD005	**VT425100**	LED	SLZ-190B-17-T1 RE		STRINGS/CHOIR		01
	LD011	**VT392600**	LED	SEL4225R TP2 RE		A-1,G0,		01
	-013	**VT392600**	LED	SEL4225R TP2 RE		F1		01
*	LD011	**V3503600**	LED	SEL4225R TP2 RE				
*	-013	**V3503600**	LED	SEL4225R TP2 RE				
	LD017	**VT392600**	LED	SEL4225R TP2 RE		A4,G5		01
	-019	**VT392600**	LED	SEL4225R TP2 RE		F6		01
*	LD017	**V3503600**	LED	SEL4225R TP2 RE				
*	-019	**V3503600**	LED	SEL4225R TP2 RE				
	LD100	**VT425100**	LED	SLZ-190B-17-T1 RE		16 BEAT,LATIN,MAIN A,		01
	-105	**VT425100**	LED	SLZ-190B-17-T1 RE		REGIST.,E.PIANO,BASS		01
	LD111	**VT393400**	LED	SEL4725Y TP2 YE		A#-1,G#0,		01
	-113	**VT393400**	LED	SEL4725Y TP2 YE		F#1		01
*	LD111	**V3503800**	LED	SEL4725Y TP2 YE				

*:New Parts

RANK:Japan only

	REF NO.	PART NO.	DESCRIPTION			REMARKS	QTY	RANK
*	-113	**V3503800**	LED	SEL4725Y TP2 YE				
	LD117	**VT393400**	LED	SEL4725Y TP2 YE		A#4,G#5,		01
	-119	**VT393400**	LED	SEL4725Y TP2 YE		F#6		01
*	LD117	**V3503800**	LED	SEL4725Y TP2 YE				
*	-119	**V3503800**	LED	SEL4725Y TP2 YE				
	LD200	**VT425100**	LED	SLZ-190B-17-T1 RE		DANCE POP,TRAD.,		01
	-202	**VT425100**	LED	SLZ-190B-17-T1 RE		MAINB		01
	LD204	**VT425100**	LED	SLZ-190B-17-T1 RE		VIBES		01
	LD205	**VT425100**	LED	SLZ-190B-17-T1 RE		SAX/FLUTE		01
	LD211	**VT392600**	LED	SEL4225R TP2 RE		B-1,A0		01
	-213	**VT392600**	LED	SEL4225R TP2 RE		G1		01
*	LD211	**V3503600**	LED	SEL4225R TP2 RE				
*	-213	**V3503600**	LED	SEL4225R TP2 RE				
	LD217	**VT392600**	LED	SEL4225R TP2 RE		B4,A5		01
	-219	**VT392600**	LED	SEL4225R TP2 RE		G6		01
*	LD217	**V3503600**	LED	SEL4225R TP2 RE				
*	-219	**V3503600**	LED	SEL4225R TP2 RE				
	LD300	**VT425100**	LED	SLZ-190B-17-T1 RE		ROCK,COUNTRY		01
	-302	**VT425100**	LED	SLZ-190B-17-T1 RE		MAIN C		01
	LD304	**VT425100**	LED	SLZ-190B-17-T1 RE		GUITAR		01
	LD305	**VT425100**	LED	SLZ-190B-17-T1 RE		BASS		01
	LD311	**VT392600**	LED	SEL4225R TP2 RE		C0		01
*	LD311	**V3503600**	LED	SEL4225R TP2 RE				
	LD312	**VT393400**	LED	SEL4725Y TP2 YE		A#0		01
*	LD312	**V3503800**	LED	SEL4725Y TP2 YE				
	LD313	**VT393400**	LED	SEL4725Y TP2 YE		G#1		01
*	LD313	**V3503800**	LED	SEL4725Y TP2 YE				
	LD317	**VT392600**	LED	SEL4225R TP2 RE		C5		01
*	LD317	**V3503600**	LED	SEL4225R TP2 RE				
	LD318	**VT393400**	LED	SEL4725Y TP2 YE		A#5		01
*	LD318	**V3503800**	LED	SEL4725Y TP2 YE				
	LD319	**VT393400**	LED	SEL4725Y TP2 YE		G#6		01
*	LD319	**V3503800**	LED	SEL4725Y TP2 YE				
	LD400	**VT425100**	LED	SLZ-190B-17-T1 RE		BALLAD,WALTZ,		01
	-402	**VT425100**	LED	SLZ-190B-17-T1 RE		MAIN D		01
	LD404	**VT425100**	LED	SLZ-190B-17-T1 RE		CLAVI TONE/SYNTH		01
	LD405	**VT425100**	LED	SLZ-190B-17-T1 RE		DRUMS		01
	LD411	**VT393400**	LED	SEL4725Y TP2 YE		C#0		01
*	LD411	**V3503800**	LED	SEL4725Y TP2 YE				
	LD412	**VT392600**	LED	SEL4225R TP2 RE		B0		01
*	LD412	**V3503600**	LED	SEL4225R TP2 RE				
	LD413	**VT392600**	LED	SEL4225R TP2 RE		A1		01
*	LD413	**V3503600**	LED	SEL4225R TP2 RE				
	LD417	**VT393400**	LED	SEL4725Y TP2 YE		C#5		01
*	LD417	**V3503800**	LED	SEL4725Y TP2 YE				
	LD418	**VT392600**	LED	SEL4225R TP2 RE		B5		01
*	LD418	**V3503600**	LED	SEL4225R TP2 RE				
	LD419	**VT392600**	LED	SEL4225R TP2 RE		A6		01
*	LD419	**V3503600**	LED	SEL4225R TP2 RE				
	LD500	**VT425100**	LED	SLZ-190B-17-T1 RE		PIANIST,DISK,		01
	-502	**VT425100**	LED	SLZ-190B-17-T1 RE		ENDING		01
	LD504	**VT425100**	LED	SLZ-190B-17-T1 RE		ORGAN		01
	LD505	**VT425100**	LED	SLZ-190B-17-T1 RE		XG		01
	LD511	**VT392600**	LED	SEL4225R TP2 RE		D0		01
*	LD511	**V3503600**	LED	SEL4225R TP2 RE				
	LD512	**VT392600**	LED	SEL4225R TP2 RE		C1		01
*	LD512	**V3503600**	LED	SEL4225R TP2 RE				
	LD513	**VT393400**	LED	SEL4725Y TP2 YE		A#1		01
*	LD513	**V3503800**	LED	SEL4725Y TP2 YE				
	LD517	**VT392600**	LED	SEL4225R TP2 RE		D5		01
*	LD517	**V3503600**	LED	SEL4225R TP2 RE				
	LD518	**VT392600**	LED	SEL4225R TP2 RE		C6		01
*	LD518	**V3503600**	LED	SEL4225R TP2 RE				
	LD519	**VT393400**	LED	SEL4725Y TP2 YE		A#6		01
*	LD519	**V3503800**	LED	SEL4725Y TP2 YE				
	LD601	**VT425100**	LED	SLZ-190B-17-T1 RE		MUSIC DATABASE		01
	LD602	**VT425100**	LED	SLZ-190B-17-T1 RE		FADE IN/OUT		01
	LD604	**VT425100**	LED	SLZ-190B-17-T1 RE		DISK IN USE		01
	LD605	**VT425100**	LED	SLZ-190B-17-T1 RE		DUAL		01
	LD611	**VT393400**	LED	SEL4725Y TP2 YE		D#0		01

*:New Parts

RANK:Japan only

	REF NO.	PART NO.	DESCRIPTION			REMARKS	QTY	RANK
*	LD611	**V3503800**	LED	SEL4725Y TP2 YE				
	LD612	**VT393400**	LED	SEL4725Y TP2 YE		C#1		01
*	LD612	**V3503800**	LED	SEL4725Y TP2 YE				
	LD613	**VT392600**	LED	SEL4225R TP2 RE		B1		01
*	LD613	**V3503600**	LED	SEL4225R TP2 RE				
	LD617	**VT393400**	LED	SEL4725Y TP2 YE		D#5		01
*	LD617	**V3503800**	LED	SEL4725Y TP2 YE				
	LD618	**VT393400**	LED	SEL4725Y TP2 YE		C#6		01
*	LD618	**V3503800**	LED	SEL4725Y TP2 YE				
	LD619	**VT392600**	LED	SEL4225R TP2 RE		B6		01
*	LD619	**V3503600**	LED	SEL4225R TP2 RE				
	LD701	**VT425100**	LED	SLZ-190B-17-T1 RE		HARMONY		01
	LD702	**VT425100**	LED	SLZ-190B-17-T1 RE		DEMO		01
	LD704	**VT425100**	LED	SLZ-190B-17-T1 RE		ONE TOUCH SETTING		01
	LD705	**VT425100**	LED	SLZ-190B-17-T1 RE		SPLIT		01
	LD711	**VT392600**	LED	SEL4225R TP2 RE		E0,D1,		01
	-713	**VT392600**	LED	SEL4225R TP2 RE		C2		01
*	LD711	**V3503600**	LED	SEL4225R TP2 RE				
*	-713	**V3503600**	LED	SEL4225R TP2 RE				
	LD717	**VT392600**	LED	SEL4225R TP2 RE		E5,D6,		01
	-719	**VT392600**	LED	SEL4225R TP2 RE		C7		01
*	LD717	**V3503600**	LED	SEL4225R TP2 RE				
*	-719	**V3503600**	LED	SEL4225R TP2 RE				
	LD801	**VT425100**	LED	SLZ-190B-17-T1 RE		ACMP ON		01
	LD802	**VT425100**	LED	SLZ-190B-17-T1 RE		HELP		01
	LD805	**VT425100**	LED	SLZ-190B-17-T1 RE		EFFECT		01
	LD811	**VT392600**	LED	SEL4225R TP2 RE		F0		01
*	LD811	**V3503600**	LED	SEL4225R TP2 RE				
	LD812	**VT393400**	LED	SEL4725Y TP2 YE		D#1		01
*	LD812	**V3503800**	LED	SEL4725Y TP2 YE				
	LD817	**VT392600**	LED	SEL4225R TP2 RE		F5		01
*	LD817	**V3503600**	LED	SEL4225R TP2 RE				
	LD818	**VT393400**	LED	SEL4725Y TP2 YE		D#6		01
*	LD818	**V3503800**	LED	SEL4725Y TP2 YE				
	LD905	**VT425100**	LED	SLZ-190B-17-T1 RE		REVERB		01
	LD911	**VT393400**	LED	SEL4725Y TP2 YE		F#0		01
*	LD911	**V3503800**	LED	SEL4725Y TP2 YE				
	LD912	**VT392600**	LED	SEL4225R TP2 RE		E1		01
*	LD912	**V3503600**	LED	SEL4225R TP2 RE				
	LD917	**VT393400**	LED	SEL4725Y TP2 YE		F#5		01
*	LD917	**V3503800**	LED	SEL4725Y TP2 YE				
	LD918	**VT392600**	LED	SEL4225R TP2 RE		E6		01
*	LD918	**V3503600**	LED	SEL4225R TP2 RE				
*	LD918	**V3503800**	LED	SEL4725Y TP2 YE				
	SW000	**VQ371700**	Tact Switch	SKHVBL042A H=7		8 BEAT, JAZZ		01
	-002	**VQ371700**	Tact Switch	SKHVBL042A H=7		INTRO		01
	SW007	**VQ371700**	Tact Switch	SKHVBL042A H=7		PIANO, STRINGS/CHOIR		01
	-009	**VQ371700**	Tact Switch	SKHVBL042A H=7		REG-1		01
	SW100	**VQ371700**	Tact Switch	SKHVBL042A H=7		16 BEAT, LATIN		01
	-102	**VQ371700**	Tact Switch	SKHVBL042A H=7		MAIN A		01
	SW107	**VQ371700**	Tact Switch	SKHVBL042A H=7		E.PIANO,BRASS,		01
	-109	**VQ371700**	Tact Switch	SKHVBL042A H=7		REG-2		01
	SW200	**VQ371700**	Tact Switch	SKHVBL042A H=7		DANCE POP,TRADITIONAL,		01
	-202	**VQ371700**	Tact Switch	SKHVBL042A H=7		MAIN B		01
	SW207	**VQ371700**	Tact Switch	SKHVBL042A H=7		VIBES,SAX/FULTE		01
	-209	**VQ371700**	Tact Switch	SKHVBL042A H=7		REG-3		01
	SW300	**VQ371700**	Tact Switch	SKHVBL042A H=7		ROCK, COUNTRY,		01
	-302	**VQ371700**	Tact Switch	SKHVBL042A H=7		MAIN C		01
	SW307	**VQ371700**	Tact Switch	SKHVBL042A H=7		GUITAR, BASS,		01
	-309	**VQ371700**	Tact Switch	SKHVBL042A H=7		REG-4		01
	SW400	**VQ371700**	Tact Switch	SKHVBL042A H=7		BALLAD,WALTZ,		01
	-402	**VQ371700**	Tact Switch	SKHVBL042A H=7		MAIN D		01
	SW407	**VQ371700**	Tact Switch	SKHVBL042A H=7		CLAVI TONE/SYNTH,DRUMS,		01
	-409	**VQ371700**	Tact Switch	SKHVBL042A H=7		BANK -		01
	SW500	**VQ371700**	Tact Switch	SKHVBL042A H=7		PIANIST,DISK,		01
	-502	**VQ371700**	Tact Switch	SKHVBL042A H=7		ENDING		01
	SW507	**VQ371700**	Tact Switch	SKHVBL042A H=7		ORGAN,XG		01
	-509	**VQ371700**	Tact Switch	SKHVBL042A H=7		BANK +		01
	SW601	**VQ371700**	Tact Switch	SKHVBL042A H=7		MUSIC DATABASE		01
	SW602	**VQ371700**	Tact Switch	SKHVBL042A H=7		FADE IN/OUT		01

*:New Parts

RANK:Japan only

	REF NO.	PART NO.	DESCRIPTION			REMARKS	QTY	RANK
	SW608	**VQ371700**	Tact Switch	SKHVBL042A H=7		DUAL		01
	SW609	**VQ371700**	Tact Switch	SKHVBL042A H=7		REGISTRATION		01
	SW701	**VQ371700**	Tact Switch	SKHVBL042A H=7		HARMONY		01
	SW702	**VQ371700**	Tact Switch	SKHVBL042A H=7		DEMO		01
	SW708	**VQ371700**	Tact Switch	SKHVBL042A H=7		SPLIT		01
	SW709	**VQ371700**	Tact Switch	SKHVBL042A H=7		ONE TOUCH SETTING		01
	SW801	**VQ371700**	Tact Switch	SKHVBL042A H=7		ACMP ON		01
	SW802	**VQ371700**	Tact Switch	SKHVBL042A H=7		HELP		01
	SW808	**VQ371700**	Tact Switch	SKHVBL042A H=7		EFFECT		01
	SW908	**VQ371700**	Tact Switch	SKHVBL042A H=7		REVERB		01
	VR140	**VK368700**	Slide Variable Resistor	B 10.0K RS30111A9		ACMP/SONG VOLUME		03
	VR150	**V0042000**	Slide Variable Resistor	B 10.0K RS30112C9		MASTER VOLUME		03
*		**V3149300**	Circuit Board	PN2		(XV471A0)		
		- -	Jumper Wire	0.55		(VA07890)		
	C100	**FG644100**	Ceramic Capacitor-F	0.0100 50V Z				01
	C101	**UI528100**	Electrolytic Cap.	100.00 10.0V			16	01
	C200	**FG644100**	Ceramic Capacitor-F	0.0100 50V Z			4	01
	C201	**UI528100**	Electrolytic Cap.	100.00 10.0V				01
	C300	**FG644100**	Ceramic Capacitor-F	0.0100 50V Z				01
	C301	**UI528100**	Electrolytic Cap.	100.00 10.0V				01
	C400	**FG644100**	Ceramic Capacitor-F	0.0100 50V Z				01
	C401	**UI528100**	Electrolytic Cap.	100.00 10.0V				01
	CL150	**VE222400**	Ceramic Resonator	8 MHz EFO-FC8004A4				03
	CN110	**VC166500**	Connector Base Post	PH-12P SE				01
	CN120	**VB858900**	Connector Base Post	PH-10P SE				01
	CN200	**VB389600**	Connector Base Post	PH-11P SE				01
	CN310	**VB858800**	Connector Base Post	PH- 9P SE				01
	CN320	**VB858900**	Connector Base Post	PH-10P SE				01
	CW210	**- -**	Connector Assembly	DS-DS 3P-50		(VT19590)		
	D004	**VB941200**	Diode	1SS133,1SS176				01
	D006	**VB941200**	Diode	1SS133,1SS176				01
	D104	**VB941200**	Diode	1SS133,1SS176				01
	D204	**VB941200**	Diode	1SS133,1SS176				01
	D206	**VB941200**	Diode	1SS133,1SS176				01
	D304	**VB941200**	Diode	1SS133,1SS176				01
	D306	**VB941200**	Diode	1SS133,1SS176				01
	D404	**VB941200**	Diode	1SS133,1SS176				01
	D406	**VB941200**	Diode	1SS133,1SS176				01
	D504	**VB941200**	Diode	1SS133,1SS176				01
	D505	**VB941200**	Diode	1SS133,1SS176				01
	D506	**VB941200**	Diode	1SS133,1SS176				01
	D600	**VB941200**	Diode	1SS133,1SS176				01
	D604	**VB941200**	Diode	1SS133,1SS176				01
	D605	**VB941200**	Diode	1SS133,1SS176				01
	D606	**VB941200**	Diode	1SS133,1SS176				01
	D700	**VB941200**	Diode	1SS133,1SS176				01
	D704	**VB941200**	Diode	1SS133,1SS176				01
	D706	**VB941200**	Diode	1SS133,1SS176				01
	D800	**VB941200**	Diode	1SS133,1SS176				01
	D804	**VB941200**	Diode	1SS133,1SS176				01
	D806	**VB941200**	Diode	1SS133,1SS176				01
	D807	**VB941200**	Diode	1SS133,1SS176				01
	D900	**VB941200**	Diode	1SS133,1SS176				01
	D901	**VB941200**	Diode	1SS133,1SS176				01
	D906	**VB941200**	Diode	1SS133,1SS176				01
	D907	**VB941200**	Diode	1SS133,1SS176				01
	EN200	**VU481300**	Rotary Encoder	REB161 PVB 15F		Data dial knob		03
	IC100	**XS711200**	IC	MN101C027YB		CPU		06
	IC200	**VJ041400**	Transistor Array	TD62381P				04
	IC300	**VJ041400**	Transistor Array	TD62381P				04
	IC400	**VH885000**	Transistor Array	TD62785P SOURCE				04
	LD003	**VT425100**	LED	SLZ-190B-17-T1 RE		SONG		01
	LD014	**VT393400**	LED	SEL4725Y TP2 YE		D#2		01
	LD015	**VT393400**	LED	SEL4725Y TP2 YE		C#3		01
	LD016	**VT392600**	LED	SEL4225R TP2 RE		B3		01
	LD114	**VT392600**	LED	SEL4225R TP2 RE		E2,D3		01
	-116	**VT392600**	LED	SEL4225R TP2 RE		C4		01
	LD203	**VT425100**	LED	SLZ-190B-17-T1 RE		MIXER		01
	LD214	**VT392600**	LED	SEL4225R TP2 RE		F2		01

*:New Parts

RANK:Japan only

REF NO.	PART NO.	DESCRIPTION			REMARKS	QTY	RANK
LD215	**VT393400**	LED	SEL4725Y TP2 YE		D#3		01
LD216	**VT393400**	LED	SEL4725Y TP2 YE		C#4		01
LD303	**VT425100**	LED	SLZ-190B-17-T1 RE		FUNCTION		01
LD314	**VT393400**	LED	SEL4725Y TP2 YE		F#2		01
LD315	**VT392600**	LED	SEL4225R TP2 RE		E3		01
LD316	**VT392600**	LED	SEL4225R TP2 RE		D4		01
LD403	**VT425100**	LED	SLZ-190B-17-T1 RE		EASY PLAY		01
LD414	**VT392600**	LED	SEL4225R TP2 RE		G2		01
LD415	**VT392600**	LED	SEL4225R TP2 RE		F3		01
LD416	**VT393400**	LED	SEL4725Y TP2 YE		D#4		01
LD503	**VT425100**	LED	SLZ-190B-17-T1 RE		NEXT NOTE		01
LD514	**VT393400**	LED	SEL4725Y TP2 YE		G#2		01
LD515	**VT393400**	LED	SEL4725Y TP2 YE		F#3		01
LD516	**VT392600**	LED	SEL4225R TP2 RE		E4		01
LD600	**VT425100**	LED	SLZ-190B-17-T1 RE		BEAT1		01
LD603	**VT425100**	LED	SLZ-190B-17-T1 RE		SOUND REPEAT		01
LD614	**VT392600**	LED	SEL4225R TP2 RE		A2,G3,		01
-616	**VT392600**	LED	SEL4225R TP2 RE		F4		01
LD700	**VT425300**	LED	SLZ-290B-17-T1 GR		BEAT2		01
LD703	**VT425100**	LED	SLZ-190B-17-T1 RE		PAUSE		01
LD714	**VT393400**	LED	SEL4725Y TP2 YE		A#2,G#3,		01
-716	**VT393400**	LED	SEL4725Y TP2 YE		F4		01
LD800	**VT425300**	LED	SLZ-290B-17-T1 GR		BEAT3		01
LD803	**VT425100**	LED	SLZ-190B-17-T1 RE		PLAY/STOP		01
LD804	**VT425100**	LED	SLZ-190B-17-T1 RE		DIRECT ACCESS		01
LD813	**VT393400**	LED	SEL4725Y TP2 YE		C#2		01
LD814	**VT392600**	LED	SEL4225R TP2 RE		B2,A3,		01
-816	**VT392600**	LED	SEL4225R TP2 RE		G4		01
LD900	**VT425300**	LED	SLZ-290B-17-T1 GE		BEAT4		01
LD901	**VT425100**	LED	SLZ-190B-17-T1 RE		START/STOP,SYNCHRD,		01
-904	**VT425100**	LED	SLZ-190B-17-T1 RE		METRONOME		01
LD913	**VT392600**	LED	SEL4225R TP2 RE		D2		01
LD914	**VT392600**	LED	SEL4225R TP2 RE		C3		01
LD915	**VT393400**	LED	SEL4725Y TP2 YE		A#3		01
LD916	**VT393400**	LED	SEL4725Y TP2 YE		G#4		01
R200	**HF755100**	Carbon Resistor	100.0 1/4 J				01
-205	**HF755100**	Carbon Resistor	100.0 1/4 J				01
R211	**HF755100**	Carbon Resistor	100.0 1/4 J				01
R220	**HF757390**	Carbon Resistor	39.0K 1/4 J				01
R221	**HF756680**	Carbon Resistor	6.8K 1/4 J				01
R312	**HF755100**	Carbon Resistor	100.0 1/4 J				01
-319	**HF755100**	Carbon Resistor	100.0 1/4 J				01
RA200	**VF771900**	Resistor Array	RGLE8X103J				01
RA201	**VF773500**	Resistor Array	RGLE4X103J				01
SW004	**VQ371700**	Tact Switch	SKHVBL042A H=7		PAGE <		01
SW006	**VQ371700**	Tact Switch	SKHVBL042A H=7		SONG		01
SW104	**VQ371700**	Tact Switch	SKHVBL042A H=7		PAGE >		01
SW204	**VQ371700**	Tact Switch	SKHVBL042A H=7		SW11		01
SW206	**VQ371700**	Tact Switch	SKHVBL042A H=7		MIXER		01
SW304	**VQ371700**	Tact Switch	SKHVBL042A H=7		SW12		01
SW306	**VQ371700**	Tact Switch	SKHVBL042A H=7		FUNCTION		01
SW404	**VQ371700**	Tact Switch	SKHVBL042A H=7		SW13		01
SW406	**VQ371700**	Tact Switch	SKHVBL042A H=7		EASY PLAY		01
SW504	**VQ371700**	Tact Switch	SKHVBL042A H=7		SW14,MINUS,		01
-506	**VQ371700**	Tact Switch	SKHVBL042A H=7		NEXT NOTE		01
SW600	**VQ371700**	Tact Switch	SKHVBL042A H=7		METRONOME		01
SW604	**VQ371700**	Tact Switch	SKHVBL042A H=7		SW15,PLUS,		01
-606	**VQ371700**	Tact Switch	SKHVBL042A H=7		SOUND REPEAT		01
SW700	**VQ371700**	Tact Switch	SKHVBL042A H=7		TEMPO -		01
SW704	**VQ371700**	Tact Switch	SKHVBL042A H=7		EXIT		01
SW706	**VQ371700**	Tact Switch	SKHVBL042A H=7		PAUSE		01
SW800	**VQ371700**	Tact Switch	SKHVBL042A H=7		TEMPO +		01
SW804	**VQ371700**	Tact Switch	SKHVBL042A H=7		DIRECT ACCESS		01
SW806	**VQ371700**	Tact Switch	SKHVBL042A H=7		REW		01
SW807	**VQ371700**	Tact Switch	SKHVBL042A H=7		PLAY/STOP		01
SW900	**VQ371700**	Tact Switch	SKHVBL042A H=7		SYNCHRO		01
SW901	**VQ371700**	Tact Switch	SKHVBL042A H=7		START/STOP		01
SW906	**VQ371700**	Tact Switch	SKHVBL042A H=7		FF		01
SW907	**VQ371700**	Tact Switch	SKHVBL042A H=7		REC		01
SWA10	**VQ371700**	Tact Switch	SKHVBL042A H=7		TAP		01

*:New Parts

RANK:Japan only

	REF NO.	PART NO.	DESCRIPTION			REMARKS	QTY	RANK
	TR401	**VT817300**	Digital Transistor	DTB113ZS TP				01
	TR402	**VT817300**	Digital Transistor	DTB113ZS TP				01
	VR200	**VS368200**	Rotary Variable Resistor	B10.0K RK09K1130BN		CONTRAST		01
		VN637600	Circuit Board	PL		(XL151B0)		05
		VB858100	Connector Base Post	PH- 2P SE				01
		VD180000	LED	SLZ-190B-03 RE		POWER indicator		01
*		**V3255900**	Circuit Board	NW1		(XT123B0)	4	
		- -	Jumper Wire	0.55		(VD04170)		
	C0003	**VS677400**	Electrolytic Cap.-BP	2.20UF 63.0V				01
	C0004	**VS677400**	Electrolytic Cap.-BP	2.20UF 63.0V				01
	CN001	**LB932040**	Base Post Connector	VH- 4P TE				01
	CN002	**LB932080**	Base Post Connector	VH- 8P TE				01
	CN003	**LB918050**	Base Post Connector	XH 5P TE				01
		V2337300	Circuit Board	PEDAL		(XR780B0)		
		VB390200	Connector Base Post	PH- 6P TE				01
		- -	Jumper Wire	0.55		(VD04170)		
		- -	GND Wire	L=30		(VZ01760)		
⚠		**VT015700**	AC Cord Set	2P 2.5m 7A		CVP-103 J		05
⚠		**VT015800**	AC Cord Set	2P 2.44m 7A		U		06
⚠		**VT016000**	AC Cord Set	2P 2.5m		B		08
⚠		**VT015900**	AC Cord Set	2P 2.5m 2.5A		E,N		05
		VT044200	Headphone	P402416N2410		CVP-103 J		09
		VK726100	Connector	CCT5902		N		03
⚠ *		**XR748C00**	Power Transformer	GA60J		CVP-103 J		
⚠		**VU908200**	Power Transformer Assembly			U		17
⚠		**XR750B00**	Power Transformer	GA60E IEC65		B,E		14
⚠ *		**XR751C00**	Power Transformer	GA60N IEC65 E		CVP-103 N		
		VT144300	MA60 Assembly			CVP-103 J		
		VT144300	MA60 Assembly			U		
		VT144400	MA60 Assembly			B,E		
		VT152000	FU60 Assembly			CVP-103 J		10
		VT152100	FU60 Assembly			U		10
		VT152200	FU60 Assembly			B,E		10
		VC843500	Push Switch	SDDLB1216A J.U.C.S		POWER switch		03
		V2043400	Floppy Disk Drive	D359M3				16
*		**XV746A00**	Speaker	16.0cm 6ohm 40W			2	
		XL455A00	Speaker	5.0CM 16 ohm 60W		Monitor	2	07
		XQ524B00	Speaker	5.0CM 16 ohm 60W		Monitor	2	06
*		**V3316000**	LCD	EDMMR03A00				17
*		**V3316100**	Back-lit Assembly					

*:New Parts

RANK:Japan only

■CVP-103/CVP-103M OVERALL CIRCUIT DIAGRAM 1/2 (DM)

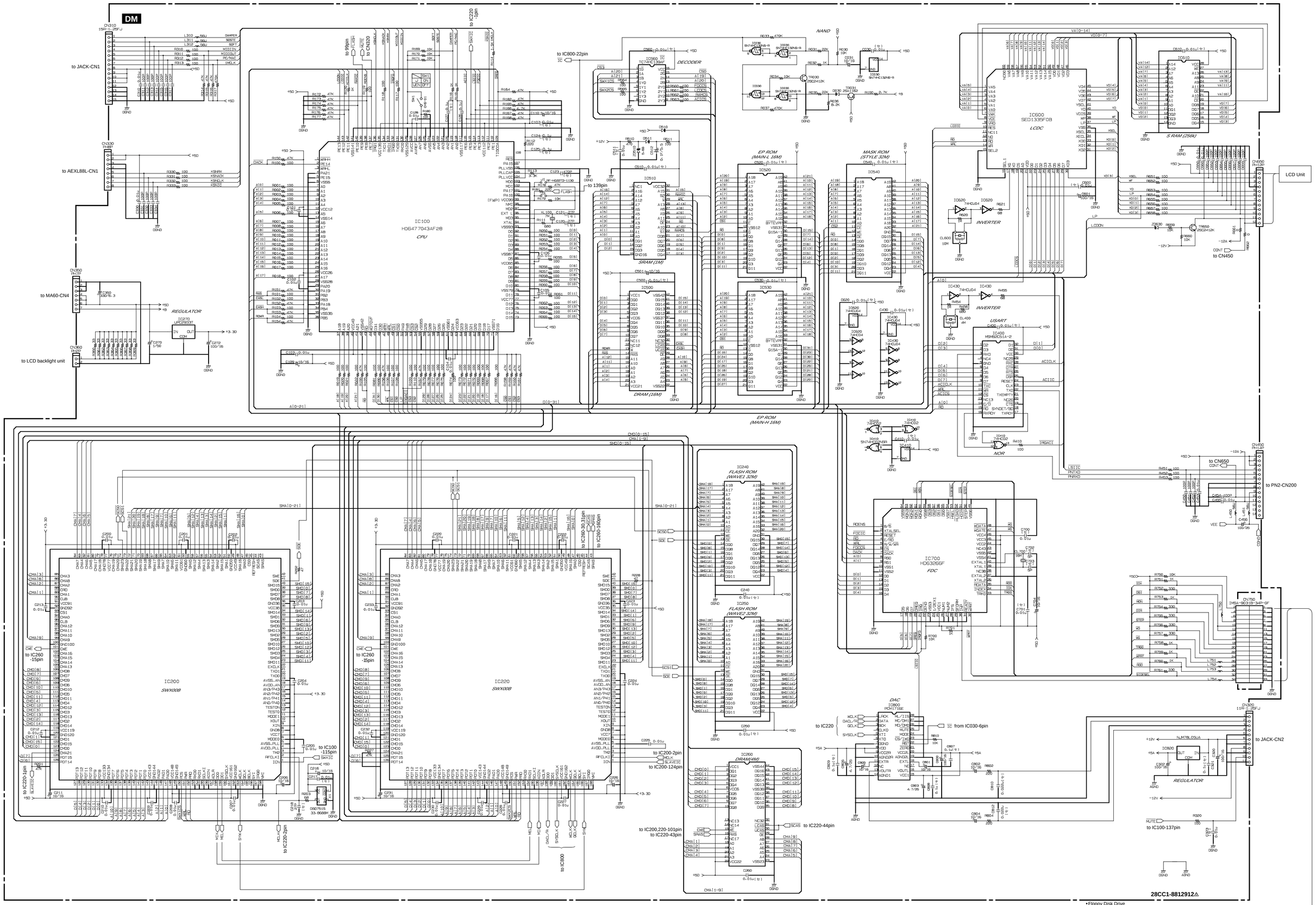

•Floppy Disk Drive

to MA60-CN3

| ⊢⊣ | : Ceramic Capacitor

Note : See parts list for details of circuit board component parts.

■CVP-103/CVP-103M OVERALL CIRCUIT DIAGRAM 2/2 (PN1A,PN1B,PN2 1/2,PN2 2/2,PN3A,PN3B,JACK,EQ,MV,HP,PL,NW1,MA60,FU60,AEXL88H,AEXL88L,PEDAL)

PN1B

28CC1-8812911⚠

PN3B

28CC1-8812911⚠

AEXL88H

28CC1-8811214⚠

PN1A

DEMO LD1702 D1702 SW702
POP LD2000 D2000 SW2000
BALLAD LD2100 D2100 SW2100
DANCE POP LD2200 D2200 SW2200
ROCK / R&B LD2300 D2300 SW2300
JAZZ LD2400 D2400 SW2400
PIANIST LD2500 D2500 SW2500
MUSIC DATA BASE LD2601 D2601 SW2601
HELP LD2602 D2602 SW2602
BALLROOM LD2001 D2001 SW2001
LATIN LD2101 D2101 SW2101
TRADITIONAL LD2201 D2201 SW2201
COUNTRY LD2301 D2301 SW2301
WALTZ LD2401 D2401 SW2401
DISK LD2501 D2501 SW2501
HARMONY LD2701 D2701 SW2701
ACMP ON LD2601 D2601 SW2601
INTRO LD2502 D2502 SW2502
MAIN A LD2102 D2102 SW2102
MAIN B LD2202 D2202 SW2202
MAIN C LD2302 D2302 SW2302
MAIN D LD2402 D2402 SW2402
ENDING LD2503 D2503 SW2503
FADE / OUT LD2602 D2602 SW2602

28CC1-8812911⚠

PN3A

PIANO LD2004 D2007 SW2007
E.PIANO LD2104 D2107 SW2107
GUITAR LD2204 D2207 SW2207
SYNTHESIZER LD2304 D2307 SW2307
ORGAN LD2404 D2407 SW2407
STRINGS / CHOIR LD2504 D2507 SW2507
DUAL LD2605 D2608 SW2608
DISK IN USE REVERB LD2605 D2608 SW2608
BRASS LD2008 D2008 SW2008
SAX / FLUTE LD2108 D2108 SW2108
BASS LD2208 D2208 SW2208
PERCUSSION LD2308 D2308 SW2308
ENSEMBLE LD2408 D2408 SW2408
XG LD2508 D2508 SW2508
SPLIT LD2706 D2708 SW2708
EFFECT LD2608 D2608 SW2608
REG.1 D2009 SW2009
REG.2 D2109 SW2109
REG.3 D2209 SW2209
REG.4 D2309 SW2309
BANK – D2409 SW2409
BANK + D2509 SW2509
REGISTRATION
ONE TOUCH SETTING

28CC1-8812911⚠

AEXL88L

KSN2
YMZ702-D
to DM-CN330

28CC1-8811214⚠

MV

MASTER VOLUME VR150 100K
ACMP/SONG VOLUME VR140 10K

28CC1-8812911⚠

PN2 2/2

TRANSISTOR ARRAY
IC100 MN101C027F CPU
TRANSISTOR ARRAY
TRANSISTOR ARRAY
to DM CN450

PN2 1/2

DIAL EN200

28CC1-8812911⚠

METORONOME

D3904 D3900 SW3900
TEMPO – D3700 SW3700
TEMPO + D3800 SW3800
SYNCHRD LD3902 D3902 SW3902
START / STOP LD3901 D3901 SW3901
TAP SWA10
BEAT 1 LD3600
BEAT 2 LD3700
BEAT 3 LD3900
BEAT 4 LD3800
FUNCTION LD3903 D3903 SW3903
MIXER LD3903 D3905 SW3905
PACE ◄ D3904 SW3904
PACE ► D3804 SW3804
CONTRAST VR200 B10K R220 39K R221 6.8K
DIRECT ACCESS LD3904 D3904 SW3904
SW 11 LD3204 D3204 SW3204
SW 12 LD3304 D3304 SW3304
SW 13 LD3404 D3404 SW3404
SW 14 LD3504 D3504 SW3504
SW 15 LD3604 D3604 SW3604
EXIT D3704 SW3704
MINUS D3505 SW3505
PLUS D3605 SW3605
SONG LD3003 D3005 SW3005
PAUSE LD3703 D3705 SW3705
EASY PLAY LD3403 D3705 SW3705
PLAY / STOP LD3903 D3907 SW3907
REW LD3503 D3806 SW3806
NEXT NOTE LD3503 D3506 SW3506
REC LD3903 D3907 SW3907
FF LD3603 D3906 SW3906
SOUND REPEAT LD3603 D3505 SW3505

28CC1-8812911⚠

PEDAL

CN1 EP-520 Sw: DAMPER Sw: SOFT Sw: SOST

JACK

Photo Coupler
IN
OUT MIDI
THRU
HOST SELECT
INVERTER
to DM-CN310
to DM-CN320
TO HOST
LINE TRANSCEIVER
N.C.
OP AMP
AUX IN L(L+R)
AUX IN R
OP AMP
AUX OUT L(L+R)
AUX OUT R

28CC1-8812176⚠

EQ

EQUALIZER
EQUALIZER

28CC1-8812176⚠

HP

PHONES

28CC1-8811547

Kyebed

PL

Power indicator LED3

28CC1-8812287

FU60

POWER SW
V-SEL/1 VOLTAGE-SELECTOR
AC cord
AC-IN/1 AC-IN(J)

※1

	Japanese model	U.S.model	European model	General export model
C1	0.01uF	0.01uF/125V	0.01uF/480V	0.01uF/480V
C2, C3	0.0047	0.0047uF/125V	0.0047uF/480V	0.0047uF/480V
J1	○	○	○	○
F1	3A	3A	T 1.6A L	3A
FU60 F2	×	×	T 1.6A L	T 1.6A L
F3	×	×	T 1.6A L	T 1.6A L

○ Installed × Not Installed

※2

FU60	L1	V
	L2	V
	L3	SU1BVD

28CB1-8811315

Japanese model
Power Transformer T1

U 120V BROWN XQ438, XR749
B, E 240V BLUE XQ431, XR758
N 240V RED 220V BLUE 120V BROWN XQ432, XR751

J (GA60 : XQ429, XR748)

MA60

to FDD power
REGULATOR
※1 F1, F2, F3 5A T 5A L
REGULATOR
Power Amp
Power Amp
REGULATOR
to DM-CN350

28CB1-8811075⚠

NW1

Speakers L R
Monitor speakers L R

2NA-VY64290⚠

(セ) : Ceramic Capacitor
(マ) : Mylar Capacitor

Note : See parts list for details of circuit board component parts.

■ TO SERVICE PERSONNEL

Critical Components Information
Components having special characteristics are marked and must be replaced with parts having specifications equel to those originally installed.

- •NJM79M12FA(XD343A00) REGULATOR -12V — 1 : OUTPUT 2 : INPUT 3 : COMMON
- •NJM78M12FA(XJ602A00) REGULATOR +12V — 1 : OUTPUT 2 : COMMON 3 : INPUT
- •11ES4(VB481900) DIODE — 1 : ANODE 2 : CATHODE
- •M5237L(XQ667A00) REGULATOR +5V — 1 : INPUT 2 : GND 3 : VOLTAGE adj.
- •D5SBA20 6.0A(VK421800) D3SBA20-4103 4.0A (VQ111500) DIODE STACK
- •SI-3051N(XQ437A00) REGULATOR +5V — 1 : GND 2 : OUTPUT 3 : INPUT
- •MJM78L05UA(XJ598A00) REGULATOR +5V — 1:OUTPUT 2:COMMON 3:INPUT
- •μPC2933T(XS516A00) REGULATOR +3.3V — 1:V in 2:GND 3:V out