Clavinova®

CLP-150/CLP-150M/ CLP-150C

SERVICE MANUAL



CLP-150

■ **CONTENTS**

SPECIFICATIONS **3**
PANEL LAYOUT **4**
DISASSEMBLY PROCEDURE **6**
LSI PIN DESCRIPTION **18**
IC BLOCK DIAGRAM **23**
CIRCUIT BOARDS **24**
TEST PROGRAM **38**
MIDI IMPLEMENTATION CHART **42**
PARTS LIST
OVERALL CIRCUIT DIAGRAM
BLOCK DIAGRAM
CIRCUIT BOARD LAYOUT

This document is printed on chlorine free (ECF) paper with soy ink.

CL **001676**

YAMAHA
HAMAMATSU, JAPAN
1.27K-9241 Printed in Japan '02.06

IMPORTANT NOTICE

This manual has been provided for the use of authorized Yamaha Retailers and their service personnel. It has been assumed that basic service procedures inherent to the industry, and more specifically Yamaha Products, are already known and understood by the users, and have therefore not been restated.

WARNING : Failure to follow appropriate service and safety procedures when servicing this product may result in personal injury, destruction of expensive components and failure of the product to perform as specified. For these reasons, we advise all Yamaha product owners that all service required should be performed by an authorized Yamaha Retailer or the appointed service representative.

IMPORTANT : This presentation or sale of this manual to any individual or firm does not constitute authorization, certification, recognition of any applicable technical capabilities, or establish a principal-agent relationship of any form.

The data provided is believed to be accurate and applicable to the unit (s) indicated on the cover. The research engineering, and service departments of Yamaha are continually striving to improve Yamaha products. Modifications are, therefore, inevitable and changes in specification are subject to change without notice or obligation to retrofit. Should any discrepancy appear to exist, please contact the distributor's Service Division.

WARNING : Static discharges can destroy expensive components. Discharge any static electricity your body may have accumulated by grounding yourself to the ground bus in the unit (heavy gauge black wires connect to this bus).

IMPORTANT : Turn the unit OFF during disassembly and parts replacement. Recheck all work before you apply power to the unit.

WARNING : CHEMICAL CONTENT NOTICE !

The solder used in the production of this product contains LEAD. In addition, other electrical/electronic and/or plastic (where applicable) components may also contain traces of chemicals found by the California Health and Welfare Agency (and possibly other entities) to cause cancer and/or birth defects or other reproductive harm.

DO NOT PLACE SOLDER, ELECTRICAL/ELECTRONIC OR PLASTIC COMPONENTS IN YOUR MOUTH FOR ANY REASON WHAT SO EVER!

Avoid prolonged, unprotected contact between solder and your skin! When soldering, do not inhale solder fumes or expose eyes to solder/flux vapor!

If you come in contact with solder or components located inside the enclosure of this product, wash your hands before handling food.

IMPORTANT NOTICE FOR THE UNITED KINGDOM

Connecting the Plug and Cord

IMPORTANT . The wires in this main lead are coloured inaccordance with the following code:

BLUE: NEUTRAL
BROWN: LIVE

As the colours of the wires in the main lead of this apparatus may not correspond with the coloured markings identifying the terminals in your plug, proceed as follows:

The BLUE wire must be connected to the terminal that is marked with the letter N (or coloured BLACK).

The BROWN wire must be connected to the terminal that is marked with the letter L (or coloured RED).

Be certain that neither core is connected to the earth terminal of the three pin plug.

■ WARNING

Components having special characteristics are marked ⚠ and must be replaced with parts having specification equal to those originally installed.

■ SPECIFICATIONS

Keyboard	88 keys (A-1–C7)
Sound Source	AWM Dynamic Stereo Sampling
Polyphony	max. 128 voices
Voice Selection	Panel preset for manual performance: 38 voices, XG voices: 480 voices + 12 drum kits
Effect	Reverb, Chorus, Brilliance, Variation effect, Insertion effect x 3
Controls	Dual, Split
Display	LCD
Recording/Playback	16-track recording/playback, tempo adjustment
Pedal	Damper, Sostenuto, Soft
Demo Songs	16 voice demo songs, 50 preset songs
Jacks/Connectors	MIDI (IN/OUT/THRU), PHONES X2, AUX IN, AUX OUT(L/L+R,R), AUX OUT (LEVEL FIXED)(L,R), TO HOST, USB, AUX PEDAL
Main Amplifiers	60W x 2
Speakers	16cm x 2, 5cm x 2
Output Impedance	AUX OUT : about 600 Ω (594 Ω) AUX OUT (Fix) : 680 Ω PHONES : 33 Ω
Dimensions (W x D x H) **(with music stand)**	1381mm x 513mm x 853mm [54-3/8" x 20-3/16" x 33-9/16"] (1381mm x 513mm x 1022mm [54-3/8" x 20-3/16" x 40-1/4"])
Weight	61.5 kg, 135lbs., 9oz
Attachment	Keyboard Cover, Music Stand
Accessories	Owner’s Manual, Reference Booklet, “50 Greats for the Piano” Score Collection

■ PANEL LAYOUT

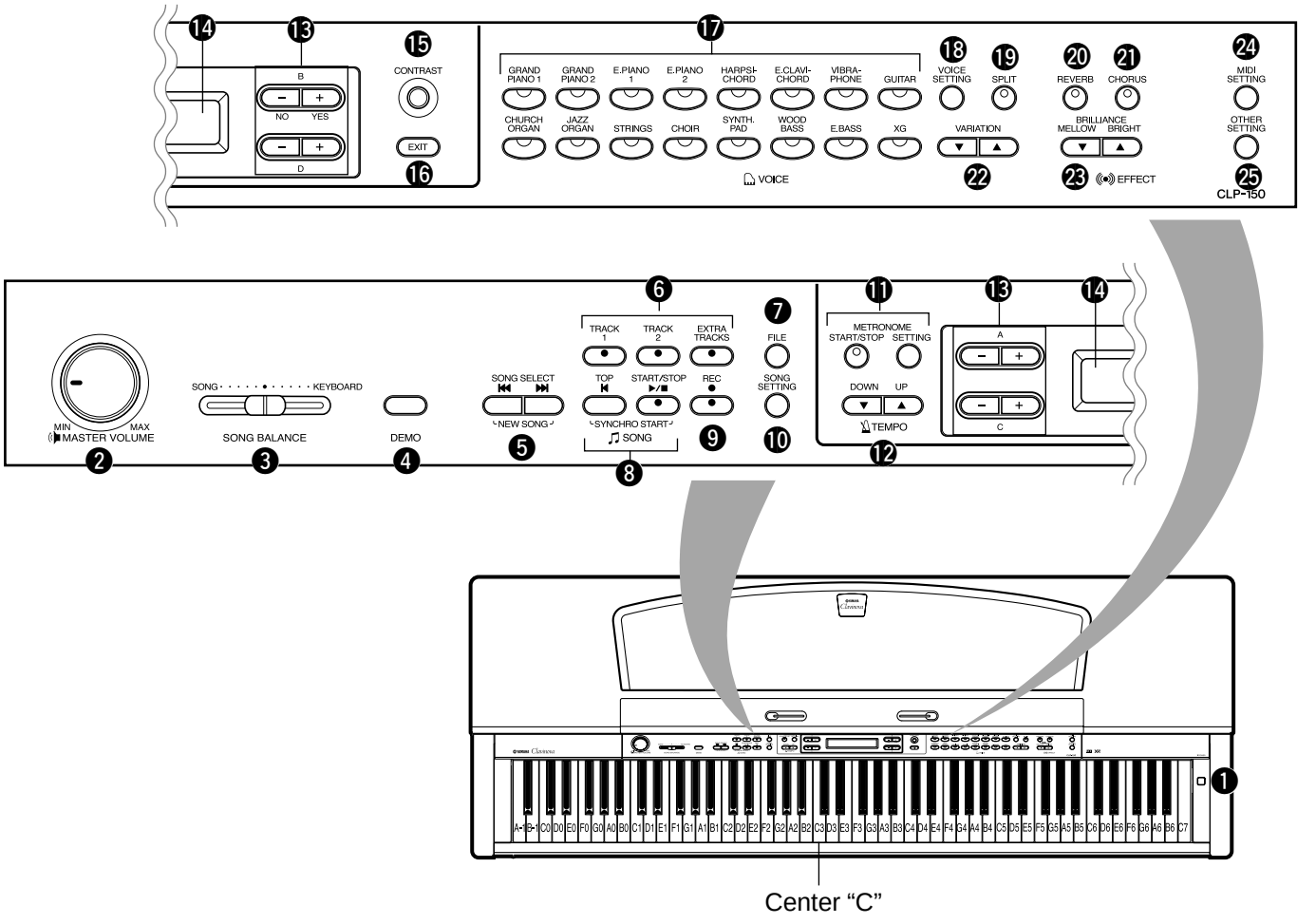

❶ [POWER] switch
❷ [MASTER VOLUME] knob
❸ [SONG BALANCE] knob
❹ [DEMO] button
❺ SONG SELECT [⏮] [⏭] buttons
❻ [TRACK1] [TRACK2] [EXTRA TRACKS] buttons
❼ [FILE] button
❽ SONG [TOP]/[START/STOP] buttons
❾ [REC] button
❿ [SONG SETTING] button
⓫ METRONOME [START/STOP]/[SETTING] buttons
⓬ TEMPO [DOWN] [UP] buttons
⓭ LCD buttons
A [–] [+]/B [– (NO)] [+ (YES)]/C [–] [+]/D [–] [+]
⓮ LCD screen
⓯ [CONTRAST] knob
⓰ [EXIT] button
⓱ Voice group buttons
⓲ [VOICE SETTING] button
⓳ [SPLIT] button
⓴ [REVERB] button
㉑ [CHORUS] button
㉒ VARIATION [▼] [▲] buttons
㉓ BRILLIANCE [MELLOW] [BRIGHT] buttons
㉔ [MIDI SETTING] button
㉕ [OTHER SETTING] button

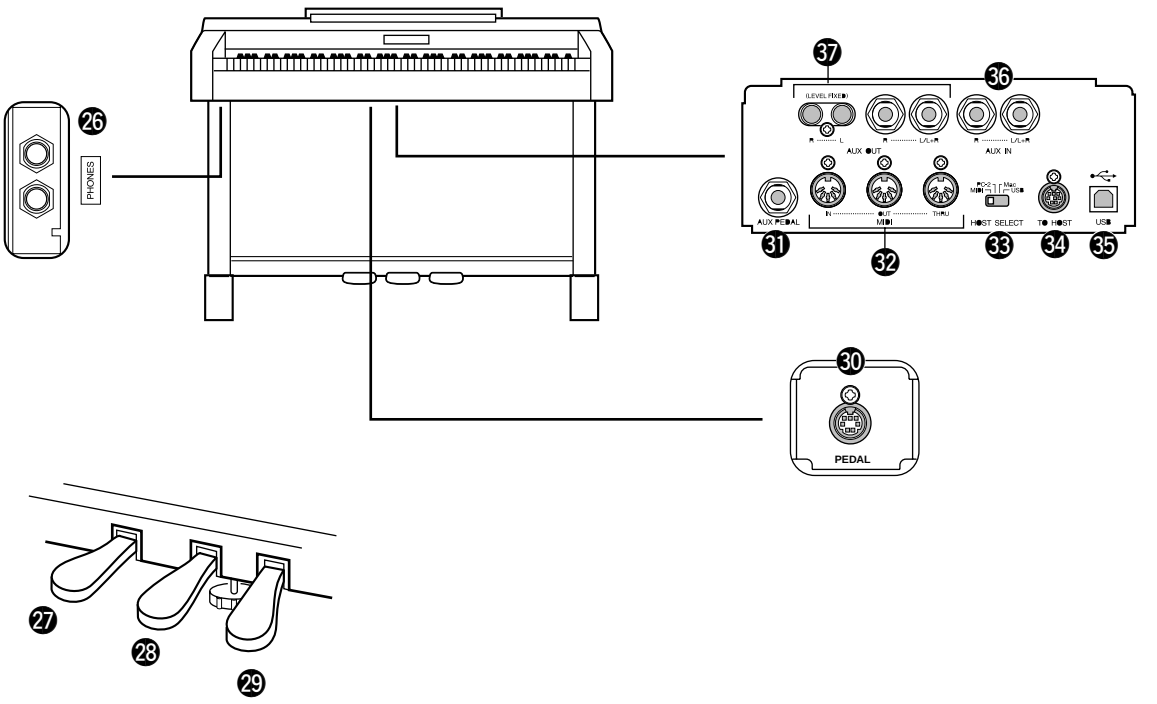

㉖ [PHONES] jacks
㉗ Soft pedal
㉘ Sostenuto pedal
㉙ Damper pedal
㉚ [PEDAL] connector
㉛ [AUX PEDAL] jack
㉜ MIDI [IN] [OUT] [THRU] connectors
㉝ [HOST SELECT] switch
㉞ [TO HOST] connector
㉟ [USB] connector
㊱ AUX IN [L/L+R] [R] jacks
㊲ AUX OUT [L/L+R] [R]/ (LEVEL FIXED) [L] [R] jacks

■ DISASSEMBLE PROCEDURE

1. Music Rest Assembly

(Time required : About 3 minutes)

Remove the four (4) screws marked [51]. The music rest assembly can then be removed. (Fig. 1)

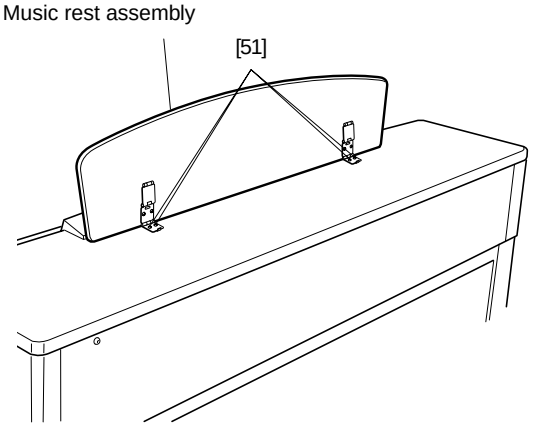

[51]: Bind Head Tapping Screw-1 3.0x16 MFZN2BL (EP030310)

(Fig. 1)

2. Top Board Assembly

(Time required : About 3 minutes)

2-1 Remove the three (3) screws marked [57].

2-2 Move the top board assembly forward, lift it. (Fig. 2)

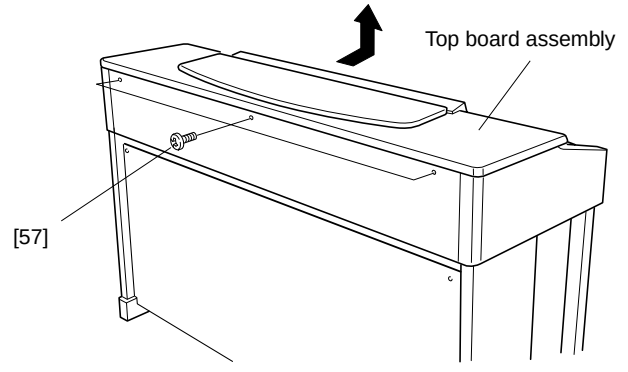

CLP-150/150M

[57]: Truss Head Screw 4.0x20 MFZN2BL (VB934000)

CLP-150C

[57]: Truss Head Screw 4.0x20 MFC2 (V6141100)

(Fig. 2)

3. Back Board Assembly

(Time required : About 3 minutes)

Remove the two (2) screws marked [B] and the four (4) screws marked [D]. The back board assembly can then be removed. (Fig. 3)

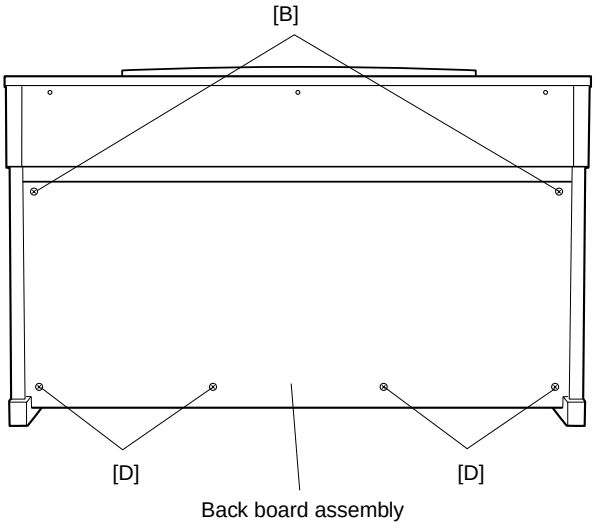

CLP-150/150M

[B]: Truss Head Screw 4.0x12 MFZN2BL (VP367300)

[D]: Truss Head Tapping Screw-1 4.0x20 MFZN2BL (03747290)

CLP-150C

[B]: Truss Head Screw 4.0x12 MFC2 (V6135000)

[D]: Truss Head Tapping Screw-1 4.0x20 MFC2 (VB164600)

(Fig. 3)

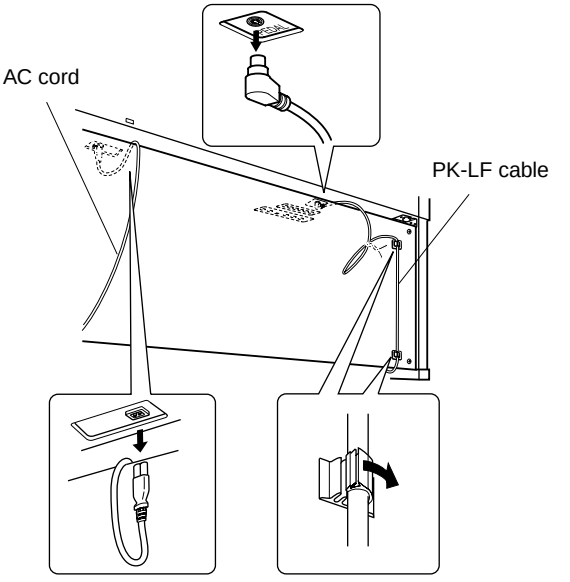

(Fig. 3-1)

4. Circuit Boards & Assemblies Inside of Main Unit

(Time required : About 10 minutes each)

4-1 Remove the top board assembly. (See procedure 2)

4-2 Each circuit board and assembly can be removed by removing its fixing screws as listed below.

Circuit board and Assembly	Ref. No.	Screw	QTY	Fig.
DM Shield Cover Assembly (U.S.A. model only)	56A	Bind Head Tapping Screw-B 3.0x6 MFZN2Y (EP600130)	6	4
DM Assembly	56B	Bind Head Tapping Screw-B 3.0x6 MFZN2Y (EP600130)	12	4
Network Circuit Board	58	Bind Head Tapping Screw-1 3.5x20 MFZN2Y (EP030470)	4	4
PK Connector Assembly	81A	Bind Head Tapping Screw-1 3.5x12 MFZN2Y (EP030240)	2	4
MA Cover Assembly (U.S.A. model only)	81B	Bind Head Tapping Screw-1 3.5x12 MFZN2Y (EP030240)	2	4
MA120 Assembly	81C	Bind Head Tapping Screw-1 3.5x12 MFZN2Y (EP030240)	2	4
Jack Assembly	81D	Bind Head Tapping Screw-1 3.5x12 MFZN2Y (EP030240)	4	4
FU Cover Assembly (U.S.A. model only)	81E	Bind Head Tapping Screw-1 3.5x12 MFZN2Y (EP030240)	2	4
FU120LB Assembly	81F	Bind Head Tapping Screw-1 3.5x12 MFZN2Y (EP030240)	2	4
Power Transformer	80A	Bind Head Tapping Screw-B 4.0x10 MFZN2BL (EP600240)	4	4

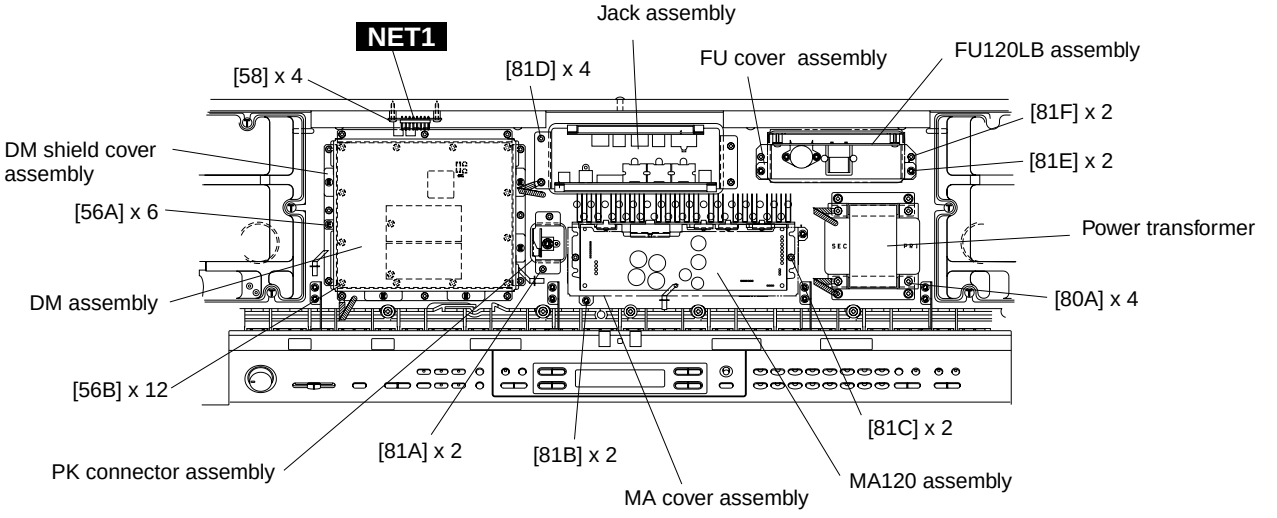

(Fig. 4)

5. PEDAL (DJK) Circuit Board

(Time required : About 10 minutes)

5-1 Remove the top board assembly. (See procedure 2)

5-2 Disconnect the PK-LF cable. (Fig. 3)

5-3 Remove the PK connector assembly. (See procedure 4)

5-4 Remove the two (2) screws marked [26c]. The pedal connector angle can then be removed from the PEDAL (DJK) circuit board. (Fig. 5)

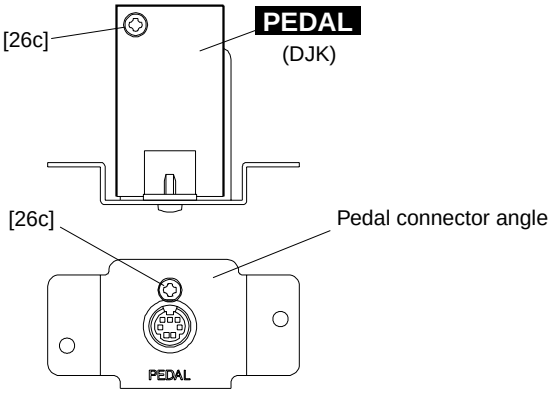

[26c]: Bind Head Tapping Screw-B 3.0x8 MFZN2BL (EP600190)

(Fig. 5)

6. MA120 Circuit Board

(Time required : About 15 minutes)

6-1 Remove the top board assembly. (See procedure 2)

6-2 Remove the MA120 assembly. (See procedure 4)

6-3 Remove the five (5) screws marked [1A], the four (4) screws marked [2] and the screw marked [3A]. The MA120 circuit board can then be removed. (Fig. 6)

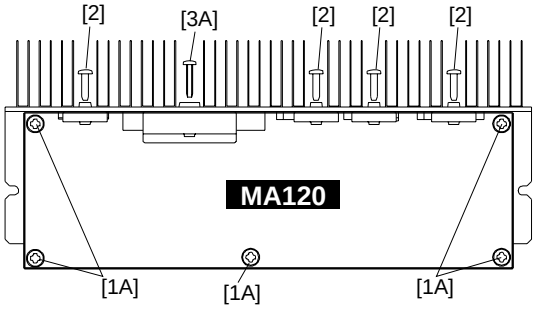

[1A]: Bind Head Tapping Screw-B 4.0x8 MFZN2Y (EP640410)
[2]: Bind Head Tapping Screw-B 3.0x10 MFZN2Y (EP600220)
[3A]: Bind Head Tapping Screw-B 3.0x16 MFZN2Y (EP600390)

(Fig. 6)

7. DJK Circuit Board, AJK Circuit Board

(Time required : About 15 minutes)

7-1 Remove the top board assembly. (See procedure 2)

7-2 Remove the jack assembly. (See procedure 4)

7-3 Remove the six (6) screws marked [4A] and the hexagonal nut marked [6A]. The DJK circuit board can then be removed. (Fig. 7)

7-4 Remove the five (5) screws marked [4B] and the four (4) hexagonal nuts marked [6B]. The AJK circuit board can then be removed. (Fig. 7)

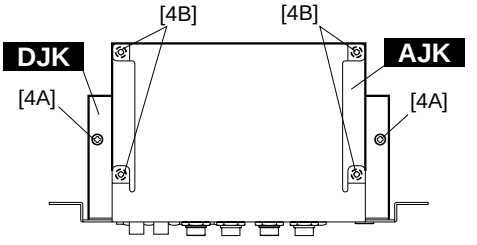

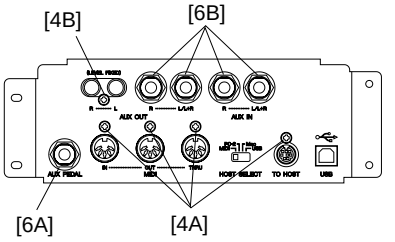

[4]: Bind Head Tapping Screw-B 3.0x8 MFZN2BL (EP600190)
[6]: Hexagonal Nut 12.0 14x2 MFZN2BL (VB508600)

(Fig. 7)

8. FU120L Circuit Board

(Time required : About 15 minutes)

8-1 Remove the top board assembly. (See procedure 2)

8-2 Disconnect the AC cord.

8-3 Remove the FU120LB assembly. (See procedure 4)

8-4 Remove the four (4) screws marked [1B]. The FU120L circuit board can then be removed. (Fig. 8)

8-5 Remove the two (2) screws marked [4C]. (Fig. 8) (General export model only)

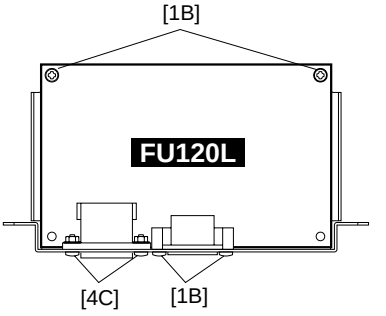

[1B]: Bind Head Tapping Screw-B 3.0x8 MFZN2BL (EP600190)
[4C]: Bind Head Screw 3.0x10 MFZN2BL (EG330380)

(Fig. 8)

9. Key Cover Assembly

(Time required : About 10 minutes)

9-1 Close the key cover.

9-2 Remove the top board assembly. (See procedure 2)

9-3 Remove the screw marked [61A]. The rack cover L can then be removed. (Fig. 9)

* **The rack cover R can then be removed in the same manner.**

9-4 Set the left end of the rod at the slits of the guide and then lift the rear key cover assembly. (Fig. 9-1)

9-5 Lean slightly the key cover assembly so that the guide pin can be removed from the guide rail. (Fig. 9-2)

* **When removing, be sure not to make scratches on the side cover.**

* **When reinstalling the key cover assembly, apply a masking shield tape around the guide rail to prevent from making scratches on the assembly.**

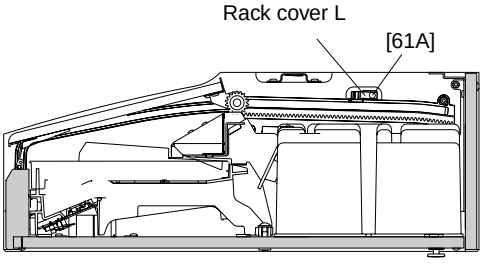

[61A]: Bind Head Tapping Screw-B 3.0x8 MFZN2Y (EP600250)

(Fig. 9)

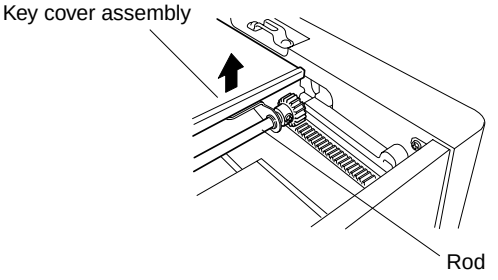

(Fig. 9-1)

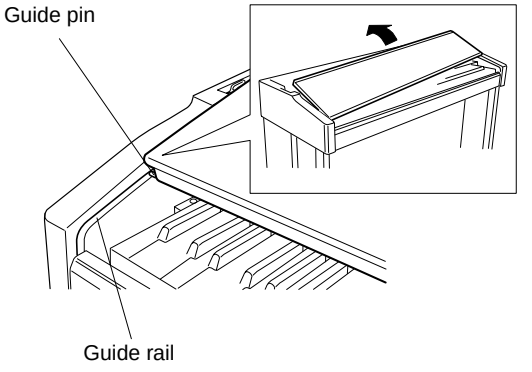

(Fig. 9-2)

10. Speaker (Tweeter)

(Time required : About 10 minutes)

10-1 Remove the top board assembly. (See procedure 2)

10-2 Remove the key cover assembly. (See procedure 9)

10-3 Remove the three (3) screws marked [61B]. The speaker (tweeter) can then be removed. (Fig. 10)

* **The left and right speaker (tweeter) each can then be removed in the same manner.**

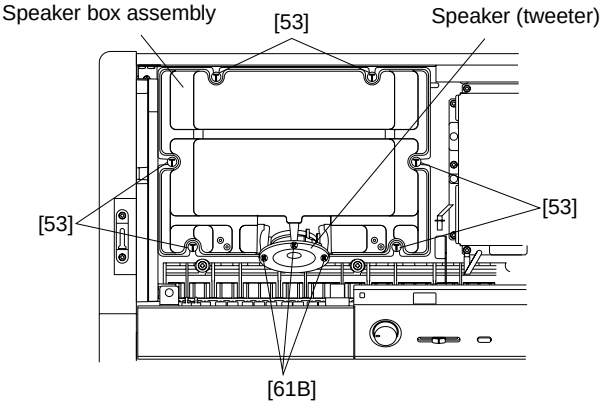

[61B]: Bind Head Tapping Screw-B 3.0x8 MFZN2Y (EP600250)

[53]: Truss Head Tapping Screw-1 3.5x14 MFZN2Y (EN630230)

(Fig. 10)

11. Speaker Box Assembly, Speaker (Woofer)

(Time required : About 15 minutes)

11-1 Remove the top board assembly. (See procedure 2)

11-2 Remove the key cover assembly. (See procedure 9)

11-3 Remove the speaker (tweeter). (See procedure 10)

11-4 Remove the six (6) screws marked [53]. The speaker box assembly can then be removed. (Fig. 10)

* **The left and right speaker box assembly each can then be removed in the same manner.**

* **The phillips type screwdriver used here must be 15cm or longer.**

11-5 Remove the four (4) screws marked [68]. The speaker (woofer) can then be removed. (Fig. 11)

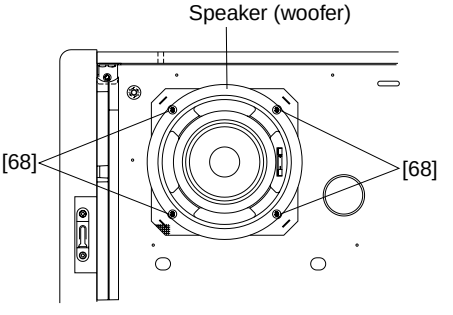

[68]: Truss Head Tapping Screw-1 4.0x20 MFZN2Y (20338800)

(Fig. 11)

12. Rack Assembly

(Time required : About 15 minutes)

12-1 Remove the top board assembly. (See procedure 2)

12-2 Remove the key cover assembly. (See procedure 9)

12-3 Remove the speaker box assembly. (See procedure 11)

12-4 Remove the four (4) screws marked [6C] and the screw marked [80B]. The rack assembly can then be removed. (Fig. 12-1, Fig. 12-2)

* **The left and right rack assembly each can then be removed in the same manner.**

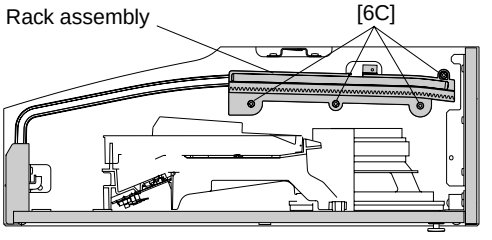

[6C]: Bind Head Tapping Screw-1 3.5x16 MFZN2BL (EP030260)

(Fig. 12-1)

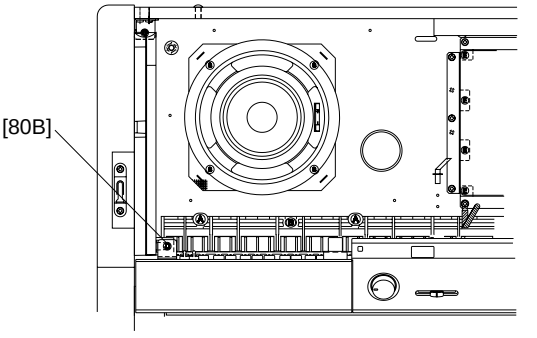

[80B]: Bind Head Tapping Screw-B 4.0x10 MFZN2BL (EP600240)

(Fig. 12-2)

13. Panel Assembly

(Time required : About 20 minutes)

13-1 Remove the top board assembly. (See procedure 2)

13-2 Remove the key cover assembly. (See procedure 9)

13-3 Remove the screw marked [80B], the screw marked [80C] and the eight (8) screws marked [81G]. The panel assembly can then be removed. (Fig. 13)

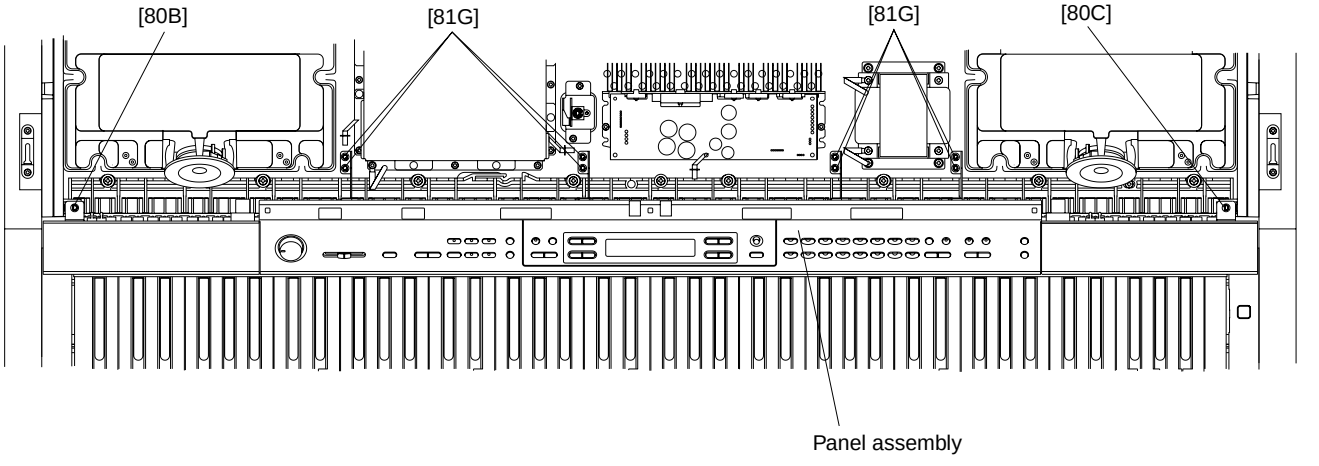

[80]: Bind Head Tapping Screw-B 4.0x10 MFZN2BL (EP600240)

[81G]: Bind Head Tapping Screw-1 3.5x12 MFZN2Y (EP030240)

(Fig. 13)

14. Circuit Boards & Assemblies of Panel Assembly

(Time required : About 25 minutes)

14-1 Remove the top board assembly. (See procedure 2)

14-2 Remove the key cover assembly. (See procedure 9)

14-3 Remove the panel assembly. (See procedure 13)

14-4 Each circuit board and assembly can be removed by removing its fixing screws as listed below.

Circuit board and Assembly	Ref. No.	Screw	QTY	Fig.
LCD Assembly	35	Bind Head Tapping Screw-B 2.6x10 MFZN2Y (VD791000)	3	14
PNL Circuit Board		Slide knob	1	14
	34A	Bind Head Tapping Screw-B 3.0x8 MFZN2Y (EP600250)	18	14
PNR Circuit Board	34B	Bind Head Tapping Screw-B 3.0x8 MFZN2Y (EP600250)	21	14
MV2 Circuit Board		Knob	1	14
	34C	Bind Head Tapping Screw-B 3.0x8 MFZN2Y (EP600250)	3	14

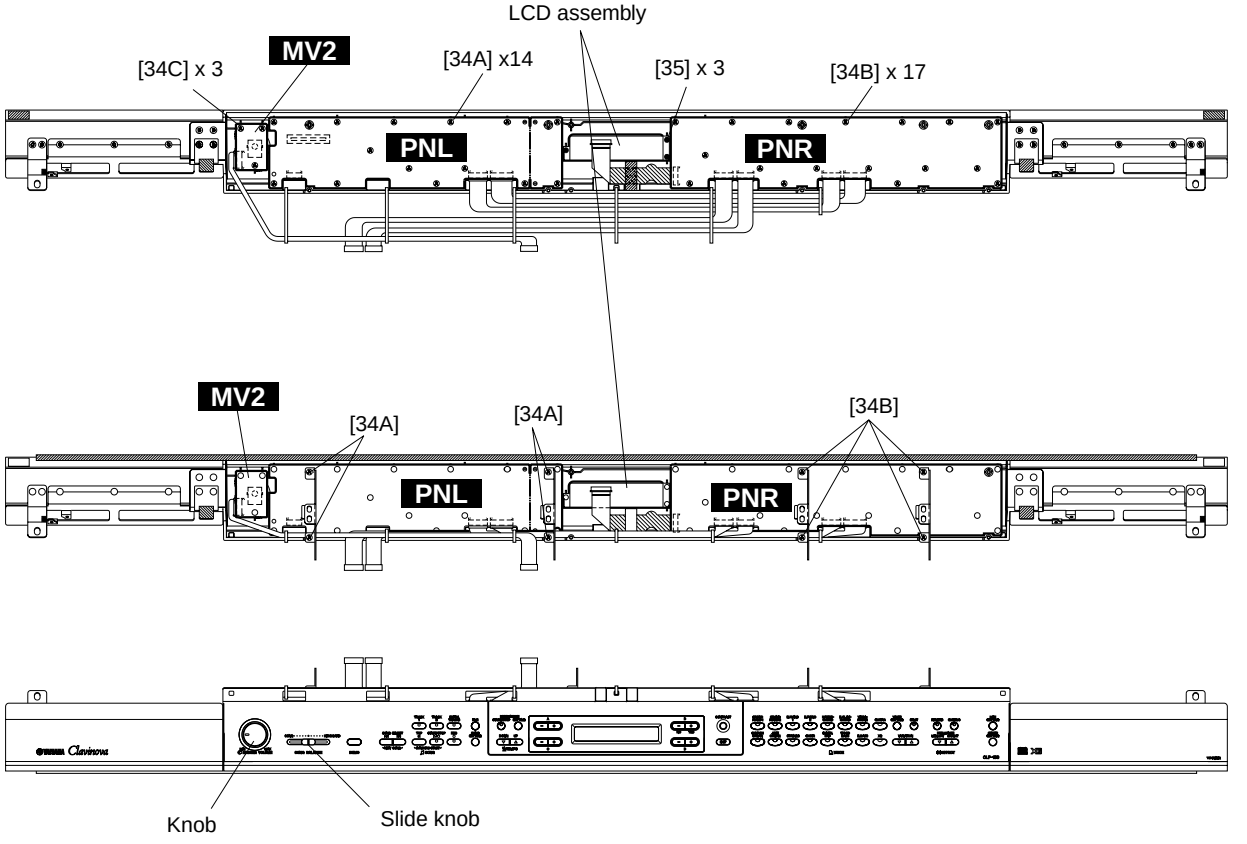

(Fig. 14)

15. End Block Assembly

(Time required : About 25 minutes)

15-1 Remove the top board assembly. (See procedure 2)
15-2 Remove the key cover assembly. (See procedure 9)
15-3 Remove the panel assembly. (See procedure 13)
15-4 Remove the screw marked [69]. The end block assembly L can then be removed. (Fig. 15)

*** The end block assembly R can then be removed in the same manner.**

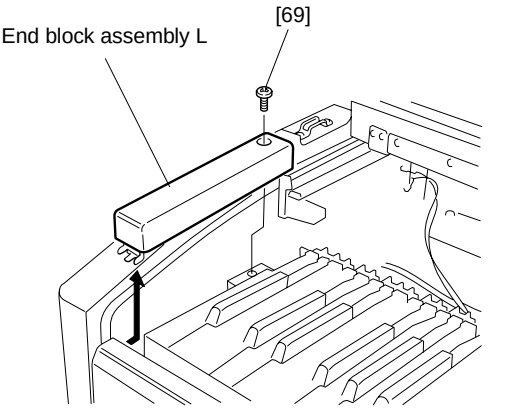

[69]: Truss Head Tapping Screw-1 3.5x30 MFZN2Y (VA076400)

(Fig. 15)

16. Power Switch Assembly

(Time required : About 25 minutes)

16-1 Remove the top board assembly. (See procedure 2)
16-2 Remove the key cover assembly. (See procedure 9)
16-3 Remove the panel assembly. (See procedure 13)
16-4 Remove the end block assembly R. (See procedure 15)
16-5 Remove the two (2) screws marked [8]. The power switch assembly can then be removed. (Fig. 16)

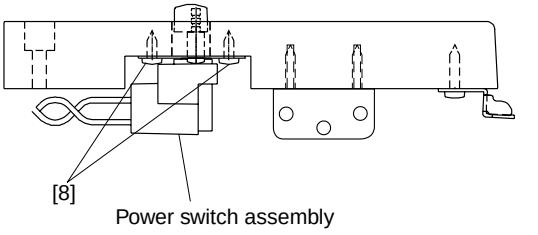

[8]: Bind Head Tapping Screw-1 3.5x10 MFZN2BL (EP030320)

(Fig. 16)

17. Keyboard Assembly

(Time required : About 30 minutes)

17-1 Remove the top board assembly. (See procedure 2)
17-2 Remove the key cover assembly. (See procedure 9)
17-3 Remove the speaker box assembly. (See procedure 11)
17-4 Remove the rack assembly. (See procedure 12)
17-5 Remove the panel assembly. (See procedure 13)
17-6 Remove the end block assembly L and R. (See procedure 15)
17-7 Remove the two (2) screws marked [54] and the nine (9) screws marked [52]. The keyboard assembly can then be removed. (Fig. 17)

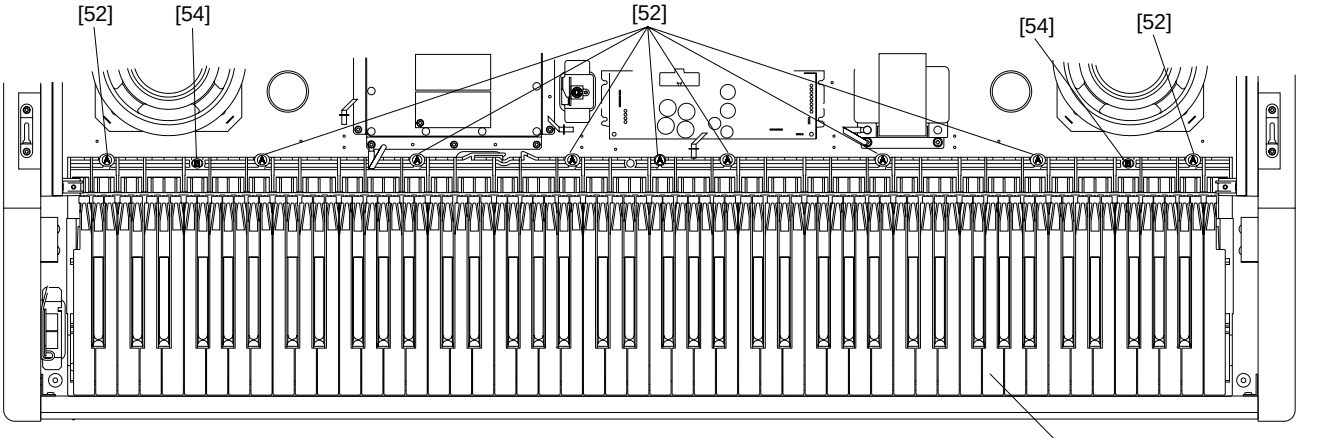

[54]: Bind Head Tapping Screw-1 4.0x14 MFZN2Y (EP040230)
[52]: Pan Head Screw PW5.0x25 MFZN2Y (VV040700)

(Fig. 17)

18. Headphones Jack Assembly, HP Circuit Board (Time required : About 30 minutes)

18-1 Remove the top board assembly. (See procedure 2)
18-2 Remove the key cover assembly. (See procedure 9)
18-3 Remove the panel assembly. (See procedure 13)
18-4 Remove the end block assembly L. (See procedure 15)
18-5 Remove the three (3) screws marked [81H]. The headphones jack assembly can then be removed. (Fig. 18)
18-6 Remove the two (2) hexagonal nuts marked [3B]. The headphone angle can then be removed from the HP circuit board. (Fig. 18-1)

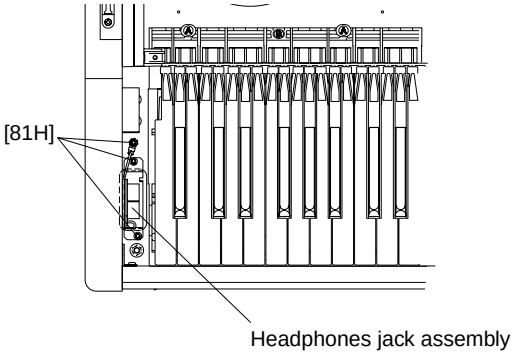

[81H]: Bind Head Tapping Screw-1 3.5x12 MFZN2Y (EP030240)

(Fig. 18)

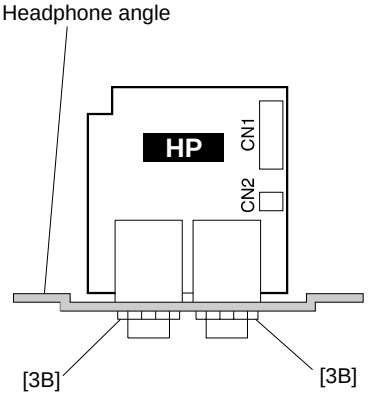

[3B]: Hexagonal Nut 12.0 14x2 MFZN2BL (VB508600)

(Fig. 18-1)

19. PL Circuit Board

(Time required : About 30 minutes)

19-1 Remove the top board assembly. (See procedure 2)
19-2 Remove the key cover assembly. (See procedure 9)
19-3 Remove the speaker box assembly. (See procedure 11)
19-4 Remove the rack assembly. (See procedure 12)
19-5 Remove the panel assembly. (See procedure 13)
19-6 Remove the end block assembly L and R. (See procedure 15)
19-7 Remove the keyboard assembly. (See procedure 17)
19-8 Remove the screw marked [6C]. The PL circuit board can then be removed. (Fig. 19)

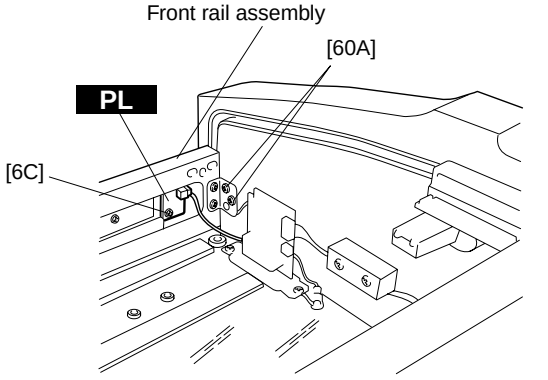

[6C]: Bind Head Tapping Screw-1 3.5x12 MFZN2BL (EP030340)
[60A]: Bind Head Tapping Screw-1 3.5x16 MFZN2Y (EP030190)

(Fig. 19)

20. Front Rail Assembly

(Time required : About 40 minutes)

20-1 Remove the top board assembly. (See procedure 2)
20-2 Remove the key cover assembly. (See procedure 9)
21-3 Remove the speaker box assembly. (See procedure 11)
21-4 Remove the rack assembly. (See procedure 12)
20-5 Remove the panel assembly. (See procedure 13)
20-6 Remove the end block assembly L and R. (See procedure 15)
20-7 Remove the keyboard assembly. (See procedure 17)
20-8 Remove the two (2) screws marked [60A] from both sides of the assembly. (Fig. 19)
20-9 Remove the seven (7) screws marked [55A]. The front rail assembly can then be removed. (Fig. 20)

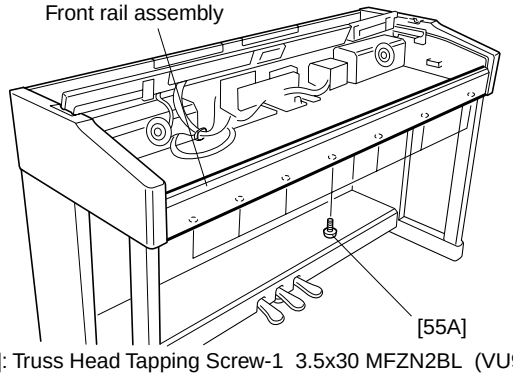

[55A]: Truss Head Tapping Screw-1 3.5x30 MFZN2BL (VU952600)

(Fig. 20)

21. Back Top Board Assembly

(Time required : About 40 minutes)

21-1 Remove the top board assembly. (See procedure 2)
21-2 Remove the key cover assembly. (See procedure 9)
21-3 Remove the speaker box assembly L and R. (See procedure 11)
21-4 Remove the three (3) screws marked [60B] and the screw marked [81I] from both sides of the assembly. (Fig. 21-1)
21-5 Remove the four (4) screws marked [55B]. The back top board assembly can then be removed. (Fig. 21-2)

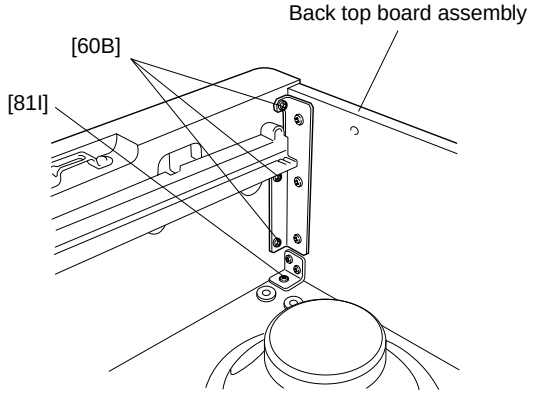

[60B]: Bind Head Tapping Screw-1 3.5x16 MFZN2Y (EP030190)
[81I]: Bind Head Tapping Screw-1 3.5x12 MFZN2Y (EP030240)

(Fig. 21-1)

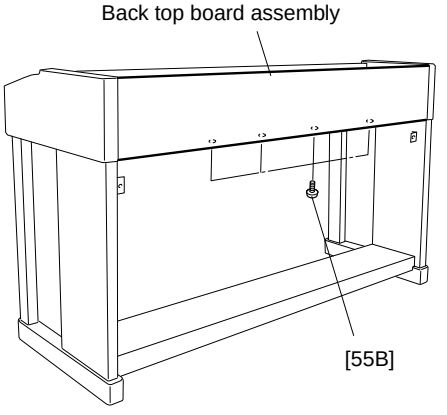

[55B]: Truss Head Tapping Screw-1 3.5x30 MFZN2BL (VU952600)

(Fig. 21-2)

22. Main Unit (Time required : About 15 minutes)

22-1 Disconnect the AC cord and the PK-LF cable.
22-2 Spread a soft cloth like a blanket on the floor where the main unit is to be placed in advance.
22-3 Remove the six (6) screws marked [A]. (Fig. 22)
22-4 Move the main unit rearward, lift it and place it on the cloth gently.

*** For safety, this work should be done by two persons.**
*** When removing the main unit from the stand, use care not to have your finger caught.**

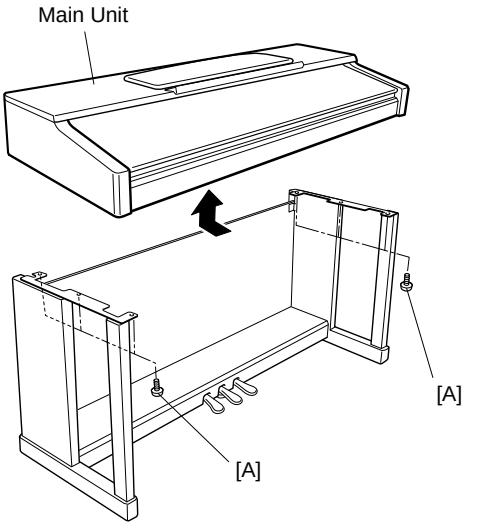

[A]: Bind Head Screw 6.0x16 MFZN2BL (EG360020)

(Fig. 22)

23. Arm Assembly

(Time required : About 40 minutes)

23-1 Remove the top board assembly. (See procedure 2)
23-2 Remove the key cover assembly. (See procedure 9)
23-3 Remove the speaker box assembly L and R. (See procedure 11)
23-4 Remove the rack assembly. (See procedure 12)
23-5 Remove the panel assembly. (See procedure 13)
23-6 Remove the end block assembly L and R. (See procedure 15)
23-7 Remove the keyboard assembly. (See procedure 17)
23-8 Remove the main unit. (See procedure 22)
23-9 Remove the two (2) screws marked [60A]. (Fig. 19)
23-10 Remove the three (3) screws marked [60B]. (Fig. 21-1)
23-11 Remove the five (5) screws marked [55C]. The arm assembly can then be removed. (Fig. 23)

*** The left and right arm assembly each can then be removed in the same manner.**

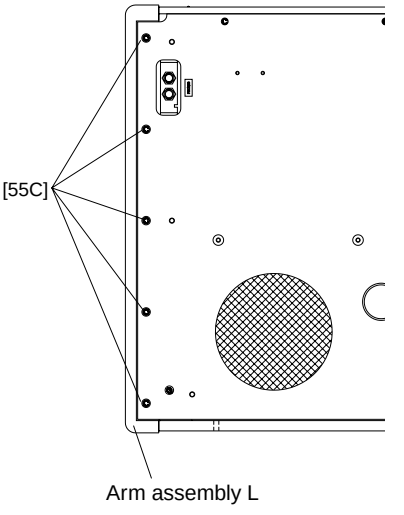

[55C]: Truss Head Tapping Screw-1 3.5x30 MFZN2BL (VU952600)

(Fig. 23)

24. Side Board Assembly

(Time required : About 15 minutes)

24-1 Remove the back board assembly. (See procedure 3)

24-2 Remove the main unit. (See procedure 22)

24-3 Remove the two (2) screws marked [CA]. The side board unit can then be removed. (Fig. 24)

* **The left and right side board unit each can then be removed in the same manner.**

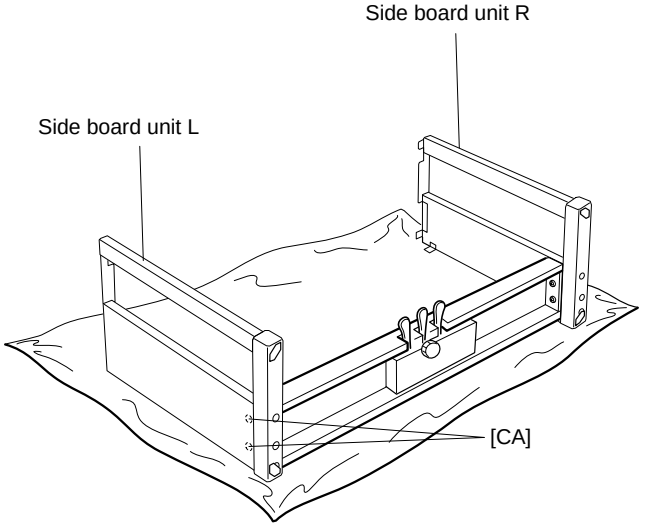

[CA]: Truss Head Screw 6.0x25 MFZN2BL (VQ448400)

(Fig. 24)

25. Pedal Box Assembly, Pedal Assembly

(Time required : About 15 minutes)

25-1 Disconnect the PK-LF cable.

25-2 With a soft cloth like a blanket placed on the floor, place the main unit on its back board gently. (Fig. 25)

* **For safety, this work should be done by two persons.**

25-3 Remove the four (4) screws marked [CB]. The pedal box assembly can then be removed. (Fig. 25)

25-4 Remove the eight (8) screws marked [6D] and the screw marked [7]. The pedal assembly can then be removed. (Fig. 25-1)

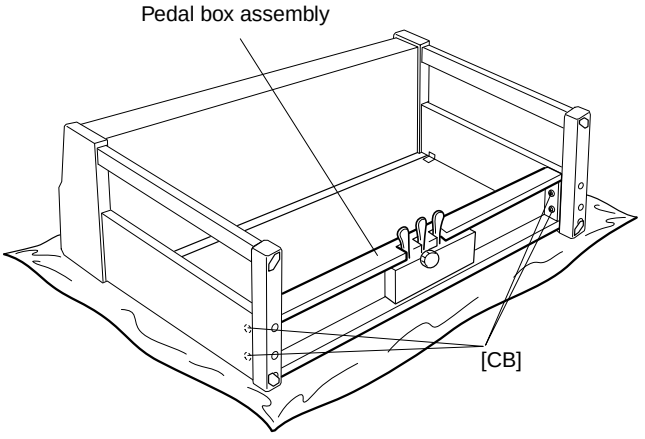

[CB]: Truss Head Screw 6.0x25 MFZN2BL (VQ448400)

(Fig. 25)

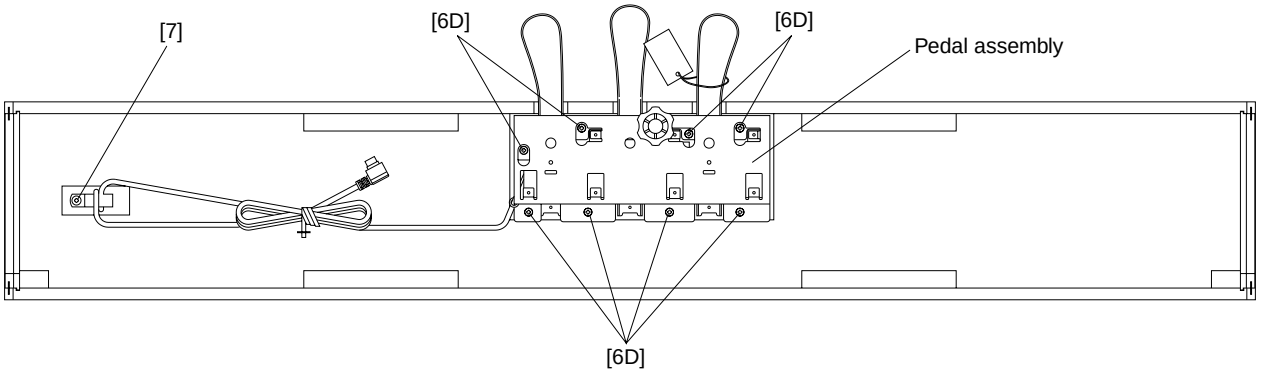

[6D]: Bind Head Tapping Screw-1 4.0x14 MFZN2Y (EP040230)

[7]: Truss Head Tapping Screw-1 3.5x20 MFZN2Y (EN630260)

(Fig. 25-1)

26. Disassembling the Keyboard

(Time required : About 15 minutes)

* **After inserting a round stick (Rod: TX000670) between the frame and the keys, remove the circuit boards. (Fig. 26)**

26-1 GHD EBUS L Circuit Board

Remove the seven (7) screws marked [260A]. The GHD EBUS L circuit board can then be removed. (Fig. 26)

26-2 GHD M Circuit Board

Remove the five (5) screws marked [260B] and the screw marked [262]. The GHD M circuit board can then be removed. (Fig. 27)

33-3 GHD H Circuit Board

Remove the four (4) screws marked [260C] and the screw marked [262]. The GHD H circuit board can then be removed. (Fig. 27)

* **Keys can be removed without removing the circuit boards.**

* **After removing the GHD EBUS L, GHD M and GHD H circuit boards, and the rubbers can then be removed.**

26-4 White key

Insert a thin plate between the white keys, near the triangle mark around the fulcrum of the key, and press down the stopper marked [A] to remove the key. (Fig. 28, Fig. 29)

* **Take care not to damage the key spring when removing a key.**

* **A black key can be removed after the white keys on either side have been removed.**

26-5 Hammer, White Key

After a key has been removed, push a key spring down once to take it out of the hook. (Fig. 30)

Place the keyboard assembly upside-down and peel the stopper away. The hammer of the white key can then be removed. (Fig. 31)

* **The hammer of the black key can then be removed in the same manner.**

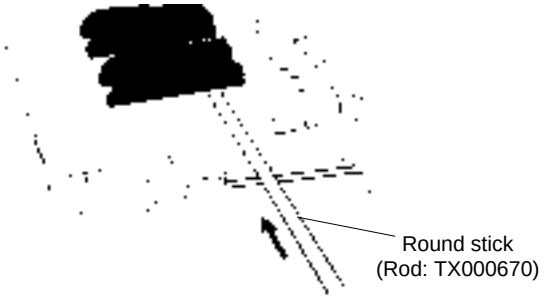

(Fig. 26)

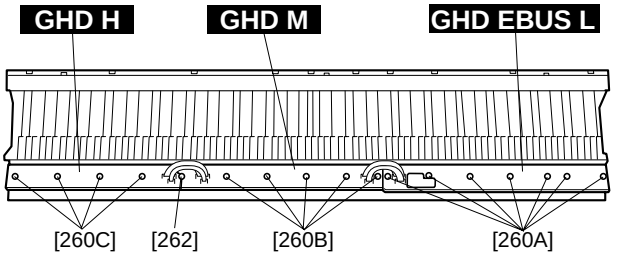

[260]: Bind Head Tapping Screw-P 3.0x10 MFZN2 (VT413400)
[262]: PW Head Tapping Screw-P 3.0x10-10 MFC2BL (V8833200)

(Fig. 27)

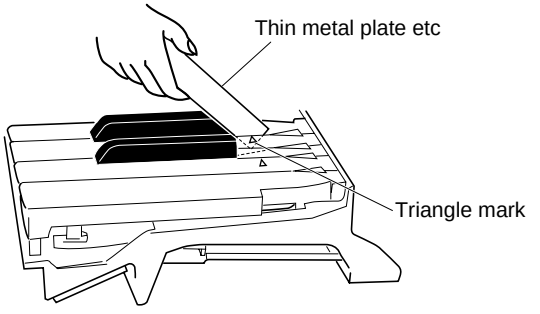

(Fig. 28)

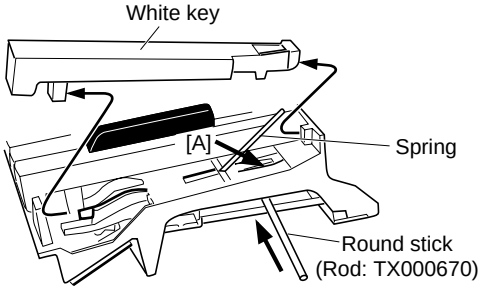

(Fig. 29)

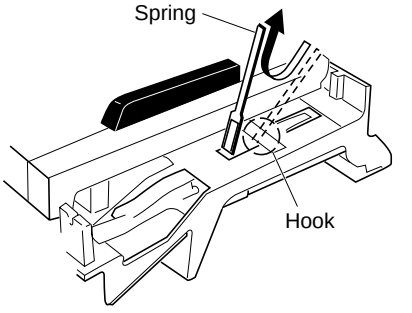

(Fig. 30)

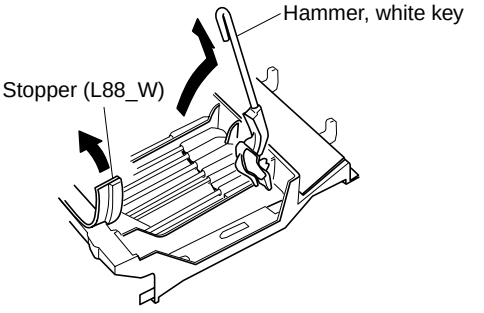

(Fig. 31)

27. Assembling the Keyboard

(Time required : About 15 minutes)

27-1 Hammer, White Key (Hammer, Black Key)

Place the keyboard assembly upside-down, insert a hammer assembly into the frame, and put the stopper (L88_W) on. (Fig. 32)

* **There are four (4) kinds of hammers that differ in weight.**

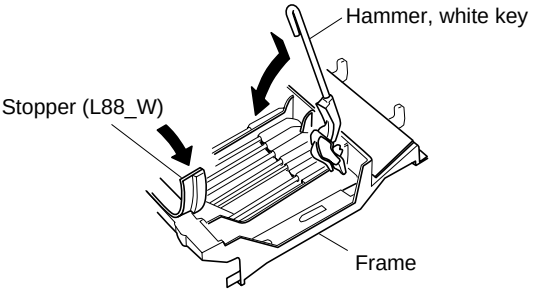

(Fig. 32)

27-2 Spring

Place the keyboard assembly rightside up. Fix key springs on the frame by setting one at each slit and pushing down once on each key spring. (Fig. 33)

* **Be careful of the direction of the spring.**

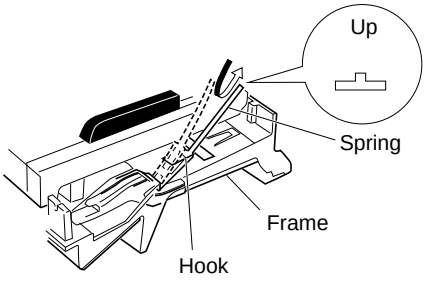

(Fig. 33)

27-3 White Key (Black Key)

After a key has been fit to part [C] and key guide, make sure that the spring is fixed to the key and then press down part [B] of the key. (Fig. 34)

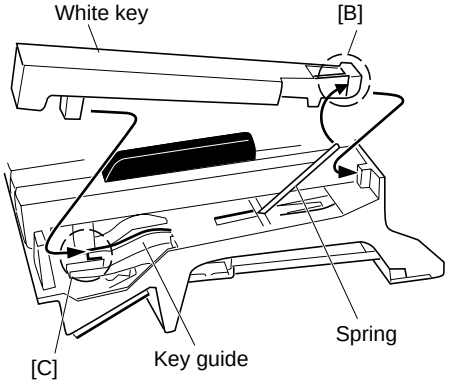

(Fig. 34)

27-4 GHD EBUS L Circuit Board

Tighten the seven (7) screws marked [260A] to fix the GHD EBUS L circuit board. (Fig. 27)

34-5 GHD M Circuit Board

Tighten the five (5) screws marked [260B] and the screw marked [262] to fix the GHD M circuit board. (Fig. 27)

34-6 GHD H Circuit Board

Tighten the four (4) screws marked [260C] and the screw marked [262] to fix the GHD H circuit board. (Fig. 27)

* **Install the circuit boards in the keyboard assembly so that the hooks hold it as shown in figure 35.**

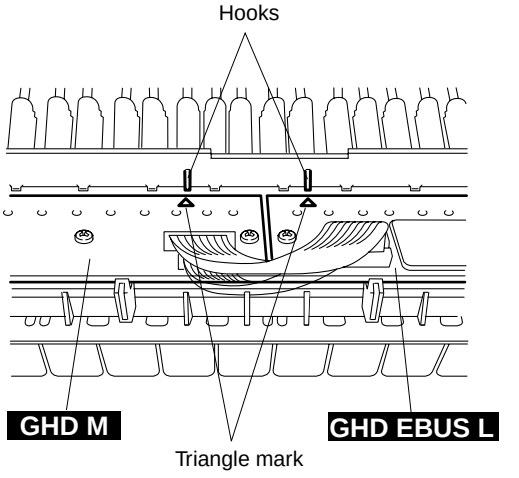

(Fig. 35)

■ LSI PIN DESCRIPTION

HD6417709SHF200 (X2687A00) **CPU** (SH3) 19

M66291GP (X2156A00) **USB Controller** 22

PCM1730E-1/2K (X2077A00) **DAC** (Digital to Analog Converter) 22

T8F02TB-0102 (X0060A00) **SWP50** (Tone Generator) 20

μ**PD780031AYGK-N01-9ET** (XZ916100) **LED DRIVER/SWITCH SCAN E-PNS2a** 18

μ**PD780031AYGK-N02** (X0031100) **LKS** 18

● μPD780031AYGK-N01-9ET (XZ916100) LED DRIVER/SWITCH SCAN E-PNS2a

PNL: IC010

μPD780031AYGK-N02 (X0031100) LKS

MK SUB: IC001

PIN NO.	NAME	I/O	FUNCTION	PIN NO.	NAME	I/O	FUNCTION
1	P50/A8	I/O	Port 5 / Higher address bus	33	P10/ANI0	I	Port 1 / A/D converter analog input
2	P51/A9	I/O		34	AV_{REF}	I	A/D converter reference voltage input
3	P51/A10	I/O		35	AV_{DD}	-	Analog power supply
4	P53/A11	I/O		36	$\overline{RESET}$	I	System reset input
5	P54/A12	I/O		37	XT2	-	Subsystem clock oscillation
6	P55/A13	I/O		38	XT1	I	
7	P56/A14	I/O		39	IC	-	Internally connected
8	P57/A15	I/O		40	X2	-	Main system clock oscillation
9	Vss0	-	Ground	41	X1	I	
10	$V_{DD}0$	-	Power supply	42	Vss1	-	Ground
11	P30	I/O	Port 3	43	P00/INTP0	I/O	Port 0 / External interrupt request input
12	P31	I/O		44	P01/INTP1	I/O	
13	P32/SDA0	I/O	Port 3 / Serial data input/output	45	P02/INTP2	I/O	
14	P33/SCL0	I/O	Port 3 / Serial clock input/output	46	P03/INTP3/ADTRG	I/O	Port 0 / External interrupt request input / Trigger signai input
15	P34	I/O	Port 3	47	P70/TI00/TO0	I/O	Port 7 / External count clock input / 16-bit timer/event counter 0 output
16	P35	I/O		48	P71/TI01	I/O	Port 7 / Capture trigger input
17	P36	I/O		49	P72/TI50/TO50	I/O	Port 7 / External count clock input / 8-bit timer/event counter 50 output
18	P20/SI30	I/O	Port 2 / Serial data input	50	P73/TI51/TO51	I/O	Port 7 / External count clock input / 8-bit timer/event counter 51 output
19	P21/SO30	I/O	Port 2 / Serial data output	51	P74/PCL	I/O	Port 7 / Clock output
20	P22/SCK30	I/O	Port 2 / Serial clock input/output	52	P75/BUZ	I/O	Port 7 / Buzzer output
21	P23RxD0	I/O	Port 2 / Serial data input	53	P64/$\overline{RD}$	I/O	Port 6 / Strobe signal output for reading
22	P24/TxD0	I/O	Port 2 / Serial data output	54	P65/$\overline{WR}$	I/O	Port 6 / Strobe signal output for writing
23	P25/ASCK0	I/O	Port 2 / Serial clock input/output	55	P66/$\overline{WAIT}$	I/O	Port 6 / Wait insertion
24	$V_{DD}1$	-	Power supply	56	P67/ASTB	I/O	Port 6 / Strobe output
25	AVss	-	Ground	57	P40/AD0	I/O	Port 4 / Lower address/data bus
26	P17/ANI7	I	Port 1 / A/D converter analog input	58	P41/AD1	I/O	
27	P16/ANI6	I		59	P42/AD2	I/O	
28	P15/ANI5	I		60	P43/AD3	I/O	
29	P14/ANI4	I		61	P44/AD4	I/O	
30	P13/ANI3	I		62	P45/AD5	I/O	
31	P12/ANI2	I		63	P46/AD6	I/O	
32	P11/ANI1	I		64	A47/AD7	I/O	

● **HD6417709SHF200** (X2687A00) **CPU** (SH3)

DM: IC014

PIN NO.	NAME	I/O	FUNCTION	PIN NO.	NAME	I/O	FUNCTION
1	MD1	I	Mode control	105	CKE/PTK5	I/O	CK enable / Port K
2	MD2	I		106	RAS3L/PTJ0	I/O	RAS address bus / Port J
3	Vcc(RTC)	-	Power supply +1.8 V	107	PTJ1	I/O	Port J
4	XTAL2	O	Crystal oscillator	108	CASL/PTJ2	I/O	CAS address bus / Port J
5	EXTAL2	I		109	VssQ	-	Ground
6	Vss(RTC)	-	Ground	110	CASU/PTJ3	I/O	CAS address bus / Port J
7	NMI	I	Non-maskable interrupt request	111	VccQ	-	Power supply +3.3 V
8	IRQ0/IRL0/PTH0	I	Interrupt request / Port H	112	PTJ4	I/O	Port J
9	IRQ1/IRL1/PTH1	I		113	PTJ5	I/O	
10	IRQ2/IRL2/PTH2	I		114	DACK0/PTD5	I/O	DMA acknowledge / Port D
11	IRQ3/IRL3/PTH3	I		115	DACK1/PTD7	I/O	
12	IRQ4/PTH4	I		116	PTE6	I/O	Port E
13	D31/PTB7	I/O	Data bus / Port B	117	PTE3	I/O	
14	D30/PTB6	I/O		118	RAS3U/PTE2	I/O	RAS address bus / Port E
15	D29/PTB5	I/O		119	PTE1	I/O	Port E
16	D28/PTB4	I/O		120	TDO/PTE0	I/O	Test data / Port E
17	D27/PTB3	I/O		121	BACK	O	Bus acknowledge
18	D26/PTB2	I/O		122	BREQ	I	Bus request
19	VssQ	-	Ground	123	WAIT	I	Hardware wait request
20	D25/PTB1	I/O	Data bus / Port B	124	RESETM	I	Manual reset
21	VccQ	-	Power supply +3.3 V	125	ADTRG/PTH5	I	Analog trigger / Port H
22	D24/PTB0	I/O	Data bus / Port B	126	IOIS16/PTG7	I	Write protect / Port G
23	D23/PTA7	I/O	Data bus / Port A	127	ASEMD0/PTG6	I	ASE mode / Port G
24	D22/PTA6	I/O		128	ASEBRKAK/PTG5	I/O	ASE break acknowledge / Port G
25	D21/PTA5	I/O		129	PTG4/CKIO2	I/O	Port G / Clock output
26	D20/PTA4	I/O		130	AUDATA3/PTG3	I/O	AUD data / Port G
27	Vss	-	Ground	131	AUDATA2/PTG2	I/O	
28	D19/PTA3	I/O	Data bus / Port A	132	Vss	-	Ground
29	Vcc	-	Power supply +1.8 V	133	AUDATA1/PTG1	I/O	AUD data / Port G
30	D18/PTA2	I/O	Data bus / Port A	134	Vcc	-	Power supply +1.8 V
31	D17/PTA1	I/O		135	AUDATA0/PTG0	I/O	AUD data / Port G
32	D16/PTA0	I/O		136	TRST/PTF7/PINT15	I	Test reset / Port F / Port interruption
33	VssQ	-	Ground	137	TMS/PTF6/PINT14	I	Test mode switch / Port F / Port interruption
34	D15	I/O	Data bus	138	TDI/PTF5/PINT13	I	Test data / Port F / Port interruption
35	VccQ	-	Power supply +3.3 V	139	TCK/PTF4/PINT12	I	Test clock / Port F / Port interruption
36	D14	I/O	Data bus	140	IRLS3/PTF3/PINT11	I	Interrupt request / Port F / Port interruption
37	D13	I/O		141	IRL2/PTF2/PINT10	I	
38	D12	I/O		142	IRLS1/PTF1/PINT9	I	
39	D11	I/O		143	IRLS0/PTF0/PINT8	I	
40	D10	I/O		144	MD0	I	Mode control
41	D9	I/O		145	Vcc(PLL1)	-	Power supply +1.8 V
42	D8	I/O		146	CAP1	-	Capacitor
43	D7	I/O		147	Vss(PLL1)	-	Ground
44	D6	I/O		148	Vss(PLL2)	-	Ground
45	VssQ	-	Ground	149	CAP2	-	Capacitor
46	D5	I/O	Data bus	150	VCC(PLL2)	-	Power supply +1.8 V
47	VccQ	-	Power supply +3.3 V	151	AUDCK/PTH6	I	AUD clock / Port H
48	D4	I/O	Data bus	152	Vss	-	Ground
49	D3	I/O		153	Vss	-	
50	D2	I/O		154	Vcc	-	Power supply +1.8 V
51	D1	I/O		155	XTAL1	O	Crystal oscillator
52	D0	I/O		156	EXTAL1	I	
53	A0	O	Address bus	157	STATUS0/PTJ6	I/O	Processor status / Port J
54	A1	O		158	STATUS1/PTJ7	I/O	
55	A2	O		159	TCLK/PTH7	I/O	Timer clock / Port H
56	A3	O		160	/IRQOUT	O	Interrupt request output
57	VssQ	-	Ground	161	VssQ	-	Ground
58	A4	O	Address bus	162	CKIO	I/O	System clock input / output
59	VccQ	-	Power supply +3.3 V	163	VccQ	-	Power supply +3.3 V
60	A5	O	Address bus	164	TXD0/SCPT0	O	Data transmission / SCI port
61	A6	O		165	SCK0/SCPT1	I/O	Serial clock / SCI port
62	A7	O		166	TXD1/SCPT2	O	Data transmission / SCI port
63	A8	O		167	SCK1/SCPT3	I/O	Serial clock / SCI port
64	A9	O		168	TXD2/SCPT4	O	Data transmission / SCI port
65	A10	O		169	SCK2/SCPT5	I/O	Serial clock / SCI port
66	A11	O		170	RTS2/SCPT6	I/O	Transmit request / SCI port
67	A12	O		171	RXD0/SCPT0	I	Data reception / SCI port
68	A13	O		172	RXD1/SCPT2	I	
69	VssQ	-	Ground	173	Vss	-	Ground
70	A14	O	Address bus	174	RXD2/SCPT4	I	Data reception / SCI port
71	VccQ	-	Power supply +3.3 V	175	Vcc	-	Power supply +1.8 V
72	A15	O	Address bus	176	CTS2/IRQ5/SCPT7	I	Transmit clear / Interrupt request / SCI port
73	A16	O		177	MCS7/PTC7/PINT 7	I/O	Mask ROM chip select / Port C / Port interruption
74	A17	O		178		I/O	
75	A18	O		179	MCS6/PTC6/PINT 6	I/O	
76	A19	O		180		I/O	
77	A20	O		181	MCS5/PTC5/PINT 5	-	Ground
78	A21	O		182		I/O	Standby mode Interrupt request output / Port D
79	Vss	-	Ground	183	MCS4/PTC4/PINT 4	-	Power supply +3.3 V
80	A22	O	Address bus	184		I/O	Reset output / Port D
81	Vcc	-	Power supply +1.8 V	185	VssQ	I/O	Mask ROM chip select / Port C / Port interruption
82	A23	O	Address bus	186	WAKEUP/PTD3	I/O	
83	VssQ	-	Ground	187	VccQ	I/O	
84	A24	O	Address bus	188	RESETOUT/PTD2	I/O	
85	VccQ	-	Power supply +3.3 V	189	MCS3/PTC3/PINT 3	I/O	DMA acknowledge / Port D
86	A25	O	Address bus	190		I/O	
87	BS/PTK4	I/O	Bus cycle / Port K	191	MCS2/PTC2/PINT 2	I	DMA request / Port D
88	RD	O	Read strobe	192		I	
89	WE0/DQMLL	O	Select signal (D7-D0) / D QM (SDRAM)	193	MCS1/PTC1/PINT 1	I	Power on reset
90	WE1/DQMLU/WE	O	Select signal (D15-D8) / D QM (SDRAM) / Write enable	194		I	Chip active
91	WE2/DQMUL/ICIORD/PTK6	I/O	Select signal (D23-D16) / D QM (SDRAM) / I/O read / Port K	195	MCS0/PTC0/PINT 0	I	Mode control
92	WE3/DQMUU/ISIOWR/PTK7	I/O	Select signal (D31-D24) / D QM (SDRAM) / I/O write / Port K	196		I	
93	RD/WR	O	Read / Write	197	DRAK0/PTD1	I	
94	AUDSYNC/PTE7	I/O	AUD cycle / Port E	198	DRAK1/PTD0	-	Analog ground
95	VssQ	-	Ground	199	DREQ0/PTD4	I	Analog input / Port L
96	CS0/MCS0	O	Chip select / Mask ROM chip select	200	DREQ1/PTD6	I	
97	VccQ	-	Power supply +3.3V	201	RESETP	I	
98	CS2/PTK0	I/O	Chip select / Port K	202	CA	I	
99	CS3/PTK1	I/O		203	MD3	I	
100	CS4/PTK2	I/O		204	MD4	I	
101	CS5/CE1A/PTK3	I/O	Chip select / Chip enable / Port K	205	MD5	-	Analog power supply +3.3 V
102	CS6/CE1B	O	Chip select / Chip enable	206	AVss	I/O	Analog input / Analog output / Port L
103	CE2A/PTE4	I/O	Chip enable / Port E	207	AN0/PTL0	I/O	
104	CE2B/PTE5	I/O		208	AN1/PTL1	-	Analog ground

● **T8F02TB-0102** (X0060A00) **SWP50** (Tone Generator)

DM: IC012

PIN NO.	OUTER NO.	NAME	I/O	FUNCTION	PIN NO.	OUTER NO.	NAME	I/O	FUNCTION
1	E5	VSS2	-	Ground	106	E22	VSS2	-	Ground
2	D4	VDDC	-	Power supply +1.5 V	107	D23	VDDC	-	Power supply +1.5 V
3	C3	CD15	I/O	Data bus of internal register	108	C24	HMA15	O	Wave memory address bus
4	B2	CD13	I/O		109	B25	HMA16	O	
5	A1	CD14	I/O		110	A26	HMA22	O	
6	D5	CD6	I/O		111	E23	HMA25	O	
7	E6	CD2	I/O		112	F22	VDDS	-	Power supply +3 V
8	C4	CD9	I/O		113	D24	HMA27	O	Wave memory address bus
9	B3	CD11	I/O		114	C25	HMA0	O	
10	A2	CD12	I/O		115	B26	HMA23	O	
11	A3	CD10	I/O		116	C26	HMA24	O	
12	D6	CD1	I/O		117	F23	VDDS	-	Power supply +3 V
13	E7	VSS	-	Ground	118	G22	HMA26	O	Wave memory address bus
14	C5	CD5	I/O	Data bus of unternal register	119	E24	HMA30	O	
15	B4	CD8	I/O		120	D25	HMA28	O	
16	A4	CD7	I/O		121	D26	HMA29	O	
17	D7	VSS2	-	Ground	122	G23	LMA17	O	Wave memory address bus (Lower data memory)
18	C6	CD0	I/O	Data bus of unternal register	123	F24	LMA19	O	
19	E8	VSS	-	Ground	124	H22	VSS	-	Ground
20	D8	VDDS	-	Power supply +3 V	125	H23	VDDS	-	Power supply +3 V
21	B5	CD4	I/O	Data bus of internal register	126	E25	LMA20	O	Wave memory address bus (Lower data memory)
22	A5	CD3	I/O		127	E26	LMA21	O	
23	C7	CA2	I	Address bus of internal regisuter	128	G24	LMA9	O	
24	B6	CA0	I		129	F25	LMA18	O	
25	E9	CA8	I		130	J22	LMA12	O	
26	D9	CA9	I		131	J23	LMA4	O	
27	C8	CA5	I		132	H24	LMA6	O	
28	A6	CA1	I		133	F26	LMA8	O	
29	B7	CA3	I		134	G25	LMA7	O	
30	A7	CA4	I		135	G26	LMA10	O	
31	E10	VSS2	-	Ground	136	K22	VSS2	-	Ground
32	D10	VDDC	-	Power supply +1.5 V	137	K23	VDDC	-	Power supply +1.5 V
33	C9	CA10	I	Address bus of internal regisuter	138	J24	LMA13	O	Wave memory address bus (Lower data memory)
34	B8	CA6	I		139	H25	LMA11	O	
35	A8	CA7	I		140	H26	LMA5	O	
36	B9	CA11	I		141	J25	LMA3	O	
37	E11	CA14	I		142	L22	LMA16	O	
38	D11	CA15	I		143	L23	LMA0	O	
39	C10	CA13	I		144	K24	LMA2	O	
40	A9	CA12	I		145	J26	LMA14	O	
41	B10	CSN0	I	Chip select	146	K25	LMA15	O	
42	A10	CSN1	I		147	K26	LMA1	O	
43	E12	VSS	-	Ground	148	M22	VSS	-	Ground
44	D12	VDDS	-	Power supply +3 V	149	M23	VDDS	-	Power supply +3 V
45	C11	WRN	I	Write strobe	150	L24	LMA22	O	Wave memory address bus (Lower data memory)
46	B11	RDN	I	Read strobe	151	L25	LMA23	O	
47	A11	WAIT0	O	Hardware wait request	152	L26	LMA24	O	
48	C12	IRQ0	O	Interrupt request	153	M24	LMA27	O	
49	B12	DREQ0	O		154	M25	LMA28	O	
50	E13	TCK	I	Test pin	155	N22	LMA25	O	
51	D13	TRST	I		156	N23	LMA26	O	
52	C13	VSS	-	Ground	157	N24	LMA30	O	
53	A12	XO	O	Crystal osc. output	158	M26	LMA29	O	
54	B13	XI	I	Crystal osc. input	159	N25	MOEN	O	Wave memory output enable
55	A13	VDDS	-	Power supply +3 V	160	N26	MWEN	O	Wave memory write enable
56	A14	SLAVE	I	Master/Slave select	161	P26	LMD15	I/O	Wave memory data bus (Lower 16 bit)
57	E14	TMS	I	Test pin	162	P22	VSS	-	Ground
58	D14	TDO	O		163	P23	VDDS	-	Power supply +3 V
59	C14	ICN	I	Initial clear	164	P24	LMD13	I/O	Wave memory data bus (Lower 16 bit)
60	B14	RFCLK0	O	PLL Clock	165	P25	LMD14	I/O	
61	B15	PLL_TSTN	I	Power supply	166	R25	LMD11	I/O	
62	C15	PLL_BP	I		167	R24	LMD10	I/O	
63	D15	VDDS	-	Power supply +3 V	168	R23	VDDS	-	Power supply +3 V
64	E15	VSS	-	Ground	169	R22	VSS	-	Ground
65	A15	RFCLK1	I	PLL Clock	170	R26	LMD12	I/O	Wave memory data bus (Lower 16 bit)
66	A16	VDDC	-	Power supply +1.5 V	171	T26	LMD9	I/O	
67	B16	TMODE	I	Test pin	172	T25	LMD8	I/O	
68	C16	PLL_AVD	-	Power supply (PLL)	173	T24	LMD7	I/O	
69	D16	NC	-	Not used	174	T23	VSS2	-	Ground
70	E16	NC	-	Not used	175	T22	VSS	-	Ground
71	A17	PLL_AVS	-	Power supply (PLL)	176	U26	LMD6	I/O	Wave memory data bus (Lower 16 bit)
72	B17	TEST1	I	Test pin	177	U25	LMD5	I/O	
73	A18	VSS	-	Ground	178	V26	LMD3	I/O	
74	C17	SY1	I	Sync. clock	179	U24	LMD4	I/O	
75	D17	VDDC	-	Power supply +1.5 V	180	U23	VDDC	-	Power supply +3 V
76	E17	VSS2	-	Ground	181	U22	VSS2	-	Ground
77	B18	KONTRG0	O	Key on data	182	V25	LMD2	I/O	Wave memory data bus (Lower 16 bit)
78	A19	KONTRG1	I		183	W26	LMD0	I/O	
79	C18	CK512	O		184	V24	LMD1	I/O	
80	B19	CK128	O	Master clock (256 Fs)	185	W25	DCSL0	O	
81	D18	BCLK	O	Master clock (64 Fs)	186	V23	VDDS	-	Power supply +3 V
82	E18	SY0	O	Sync. clock	187	V22	VDDC	-	Power supply +1.5 V
83	C19	HMA20	O	Wave memory address bus	188	W24	DCSL1	O	
84	A20	HMA21	O		189	Y26	DQML3	O	MASK signal
85	B20	HMA19	O		190	Y25	DQML1	O	
86	C20	HMA18	O		191	Y24	DMAL14	O	Address bus (DIMM, SDRAM)
87	D19	VDDS	-	Power supply +1.5 V	192	W23	VDDS	-	Power supply +3 V
88	E19	VSS	-	Ground	193	W22	VSS	-	Ground
89	A21	HMA9	O	Wave memory address bus	194	AA26	DMAL13	O	Address bus (DIMM, SDRAM)
90	B21	HMA7	O		195	AA25	DMAL12	O	
91	A22	HMA6	O		196	AB26	DMAL9	O	
92	D20	HMA8	O		197	Y23	VSS	-	Ground
93	C21	HMA10	O		198	AA24	DMAL11	O	Address bus (DIMM, SDRAM)
94	E20	HMA17	O		199	Y22	VSS	-	Ground
95	D21	VDDS	-	Power supply +1.5 V	200	AA23	DMAL10	O	Address bus (DIMM, SDRAM)
96	B22	HMA11	O	Wave memory address bus	201	AB25	DMAL8	O	
97	A23	HMA4	O		202	AC26	DMAL6	O	
98	C22	HMA5	O		203	AB24	DMAL7	O	
99	B23	HMA13	O		204	AC25	DMAL5	O	
100	E21	VSS	-	Ground	205	AA22	VSS2	-	Ground
101	D22	HMA12	O	Wave memory address bus	206	AB23	VSS	-	Ground
102	C23	HMA3	O		207	AC24	DMAL4	O	Address bus (DIMM, SDRAM)
103	A24	HMA14	O		208	AD26	DMAL3	O	
104	B24	HMA2	O		209	AD25	DMAL2	O	
105	A25	HMA1	O		210	AE26	DMAL0	O	

PIN NO.	OUTER NO.	NAME	I/O	FUNCTION	PIN NO.	OUTER NO.	NAME	I/O	FUNCTION
211	AB22	VSS2	-	Ground	316	AB5	VSS2	-	Ground
212	AC23	VDDC	-	Power supply +1.5 V	317	AC4	VDDC	-	Power supply +1.5 V
213	AD24	DMAL1	O	Address bus (DIMM, SDRAM)	318	AD3	MELI6	I	MEL wave data input
214	AE25	DCSL2	O		319	AE2	MELI7	I	
215	AF26	DRAS0	O		320	AF1	ADLR	O	Power supply +3 V
216	AC22	DCAS0	O		321	AB4	DITO	O	
217	AB21	VDDS	-	Power supply +3 V	322	AA5	VSS	-	Ground
218	AD23	DCLKIN	I		323	AC3	AFRM	I/O	
219	AE24	DQML2	O	MASK signal	324	AD2	ACLK	I/O	
220	AF25	DCSL3	O		325	AE1	ADIR	O	
221	AF24	DQML0	O	MASK signal	326	AD1	ADAT0	I/O	Data bus (ABUS)
222	AC21	VDDS	-	Power supply +3 V	327	AA4	VDDS	-	Power supply +3 V
223	AB20	VSS	-	Ground	328	Y5	ADAT9	I/O	
224	AD22	DWEN0	O		329	AB3	ADAT3	I/O	
225	AE23	DCLK0	O		330	AC2	ADAT1	I/O	Data bus (ABUS)
226	AF23	DCLK1	O		331	AC1	ADAT2	I/O	
227	AC20	DCLKE	O		332	Y4	ADAT10	I/O	
228	AD21	HMD13	I/O	Wave memory data bus (Upper data memory)	333	AA3	ADAT6	I/O	
229	AB19	VSS	-	Ground	334	W5	VSS	-	Ground
230	AC19	VDDS	-	Power supply +3 V	335	W4	VDDS	-	Power supply +3 V
231	AE22	HMD15	I/O		336	AB2	ADAT4	I/O	
232	AF22	HMD14	I/O	Wave memory data bus (Upper data memory)	337	AB1	ADAT5	I/O	
233	AD20	HMD10	I/O		338	Y3	ADAT11	I/O	
234	AE21	HMD12	I/O		339	AA2	ADAT7	I/O	
235	AB18	VDDC	-	Power supply +1.5 V	340	V5	ADAT14	I/O	Data bus (ABUS)
236	AC18	VDDS	-	Power supply +3 V	341	V4	ADAT15	I/O	
237	AD19	HMD7	I/O		342	W3	ADAT13	I/O	
238	AF21	HMD11	I/O	Wave memory data bus (Upper data memory)	343	AA1	ADAT8	I/O	
239	AE20	HMD9	I/O		344	Y2	ADAT12	I/O	
240	AF20	HMD8	I/O		345	Y1	TDI	I	
241	AB17	VSS2	-	Ground	346	U5	VSS2	-	Ground
242	AC17	VDDC	-	Power supply +1.5 V	347	U4	VDDC	-	Power supply +1.5 V
243	AD18	HMD4	I/O		348	V3	HRD13	I/O	
244	AE19	HMD6	I/O	Wave memory data bus (Upper data memory)	349	W2	HRD15	I/O	
245	AF19	HMD5	I/O		350	W1	HRD14	I/O	
246	AE18	HMD3	I/O		351	V2	HRD12	I/O	
247	AB16	VSS	-	Ground	352	T5	HRD7	I/O	DRAM data bus
248	AC16	VSS2	-	Ground	353	T4	HRD6	I/O	
249	AD17	HMD1	I/O		354	U3	HRD10	I/O	
250	AF18	HMD2	I/O	Wave memory data bus (Upper data memory)	355	V1	HRD11	I/O	
251	AE17	HMD0	I/O		356	U2	HRD9	I/O	
252	AF17	DCSH0	O		357	U1	HRD8	I/O	
253	AB15	VSS	-	Ground	358	R5	VSS	-	Ground
254	AC15	VDDS	-	Power supply +3 V	359	R4	VDDS	-	Power supply +3 V
255	AD16	DCSH1	O		360	T3	HRD5	I/O	
256	AE16	DQMH3	O	MASK signal	361	T2	HRD4	I/O	
257	AF16	DQMH1	O		362	T1	HRD3	I/O	DRAM data bus
258	AD15	DMAH14	O	Address bus (DIMM, SDRAM)	363	R3	HRD2	I/O	
259	AE15	DMAH13	O		364	R2	HRD1	I/O	
260	AB14	VSS	-	Ground	365	P5	VDDS	-	Power supply +3 V
261	AC14	VSS2	-	Ground	366	P4	HRD0	I/O	DRAM data bus
262	AD14	DMAH11	O		367	P3	RWEN	O	DRAM write enable
263	AF15	DMAH12	O		368	R1	RQML	O	
264	AE14	DMAH10	O	Address bus (DIMM, SDRAM)	369	P2	RCAS	O	DRAM column address strobe (RAS signal)
265	AF14	DMAH9	O		370	P1	RRAS	O	DRAM row address strobe (RAS signal)
266	AF13	DMAH8	O		371	N1	RA13	O	DRAM address bus
267	AB13	VDDS	-	Power supply +3 V	372	N5	VDDS	-	Power supply +3 V
268	AC13	VDDS	-	Power supply +3 V	373	N4	VDDS	-	Power supply +3 V
269	AD13	DMAH6	O		374	N3	RA10	O	
270	AE13	DMAH7	O	Address bus (DIMM, SDRAM)	375	N2	RA12	O	DRAM address bus
271	AE12	DMAH4	O		376	M2	RA1	O	
272	AD12	DMAH3	O		377	M3	RA2	O	
273	AC12	VDDS	-	Power supply +1.5 V	378	M4	VDDS	-	Power supply +3 V
274	AB12	VSS	-	Ground	379	M5	VSS	-	Ground
275	AF12	DMAH5	O		380	M1	RA0	O	
276	AF11	DMAH2	O	Address bus (DIMM, SDRAM)	381	L1	RA3	O	DRAM address bus
277	AE11	DMAH1	O		382	L2	RA4	O	
278	AD11	DMAH0	O		383	L3	RA5	O	
279	AC11	VSS	-	Ground	384	L4	VSS2	-	Ground
280	AB11	VSS	-	Ground	385	L5	VSS	-	Ground
281	AF10	DRAS1	O		386	K1	RA6	O	
282	AE10	DCSH2	O		387	K2	RA7	O	DRAM address bus
283	AF9	DQMH2	O	MASK signal	388	J1	RA9	O	
284	AD10	DCSH3	O		389	K3	RA8	O	
285	AC10	VDDC	-	Power supply +1.5 V	390	K4	VDDC	-	Power supply +1.5 V
286	AB10	VSS2	-	Ground	391	K5	VSS2	-	Ground
287	AE9	DQMH0	O	MASK signal	392	J2	RA11	O	DRAM address bus
288	AF8	DWEN1	O		393	H1	RCLK	O	
289	AD9	DCAS1	O		394	J3	RCLKE	O	
290	AE8	DCLK2	O		395	H2	RCLKIN	I	
291	AC9	VDDS	-	Power supply +3 V	396	J4	VDDS	-	Power supply +3 V
292	AB9	VDDC	-	Power supply +1.5 V	397	J5	VDDC	-	Power supply +1.5 V
293	AD8	DCLK3	O		398	H3	RQMH	O	
294	AF7	MELO0	O		399	G1	LRD15	I/O	
295	AE7	MELO1	O	MEL wave data output	400	G2	LRD14	I/O	DRAM data bus (Lower data)
296	AD7	MELO2	O		401	G3	LRD13	I/O	
297	AC8	VDDS	-		402	H4	VDDS	-	Power supply +3 V
298	AB8	VSS	-	Ground	403	H5	VSS	-	Ground
299	AF6	MELO3	O		404	F1	LRD12	I/O	
300	AE6	MELO4	O		405	F2	LRD11	I/O	DRAM data bus (Lower data)
301	AF5	MELO5	O	MEL wave data output	406	E1	LRD8	I/O	
302	AC7	MELO6	O		407	G4	VDDS	-	Ground
303	AD6	MELO7	O		408	F3	LRD10	I/O	DRAM data bus (Lower data)
304	AB7	WCLK0	O	For DAC LR clock	409	G5	VDDS	-	Ground
305	AC6	WCLK1	O		410	F4	LRD9	I/O	
306	AE5	EIRQ	O		411	E2	LRD7	I/O	
307	AF4	EICN	O		412	D1	LRD5	I/O	DRAM data bus (Lower data)
308	AD5	ESDA	I/O		413	E3	LRD6	I/O	
309	AE4	ESCL	I/O		414	D2	LRD4	I/O	
310	AB6	MELI0	I		415	F5	VSS2	-	Ground
311	AC5	MELI1	I		416	E4	VSS	-	Ground
312	AD4	MELI2	I	MEL wave data input	417	D3	LRD3	I/O	
303	AF3	MELI3	I		418	C1	LRD2	I/O	DRAM data bus (Lower data)
314	AE3	MELI4	I		419	C2	LRD1	I/O	
315	AF2	MELI5	I		420	B1	LRD0	I/O	

● **M66291GP** (X2156A00) **USB Controller**

DM: IC002

PIN NO.	NAME	I/O	FUNCTION	PIN NO.	NAME	I/O	FUNCTION
1	Core Vcc		Core power supply	25	D2	I/O	Data bus
2	GND		Ground	26	D3	I/O	
3	D-	I/O	USB data (-)	27	D4	I/O	
4	D+	I/O	USB data (+)	28	D5	I/O	
5	Vbus	I	V bus input	29	D6	I/O	
6	Tr ON	O	Tr ON output	30	D7	I/O	
7	TEST	I	TEST input	31	D8/P0	I/O	
8	/Dack1	I	DMA reception signal 1	32	D9/P1	I/O	
9	/Dreq1	O	DMA request 1	33	D10/P2	I/O	
10	/TC1	I	TC input	34	D11/P3	I/O	
11	/INT1//SOF	O	Interrupt 1/SOF output	35	IOVcc		I/O power supply
12	IOVcc		I/O power supply	36	GND		Ground
13	Xout	O	Output for oscillation	37	D12/P4	I/O	Data bus
14	Xin	I	Input for oscillation	38	D13/P5	I/O	
15	GND		Ground	39	D14/P6	I/O	
16	Core Vcc		Core power supply	40	D15/A0	I/O	
17	A1	I	Address bus	41	/HWR//BYTE	I	Highlight strobe/bus width select
18	A2	I		42	/INT0	O	Interrupt 0
19	A3	I		43	/RD	I	Read strobe
20	A4	I		44	/LWR	I	Low write strobe
21	A5	I		45	/CS	I	Chip select
22	A6	I		46	/RST	I	Reset signal
23	D0	I/O	Data bus	47	/Dreq0	O	DMA request 0
24	D1	I/O		48	/Dack0	I	DMA reception signal 0

● **PCM1730E-1/2K** (X2077A00) **DAC** (Digital to Analog Converter)

DM: IC029

PIN NO.	NAME	I/O	FUNCTION	PIN NO.	NAME	I/O	FUNCTION
1	/RST	I	Reset	15	MUTE	I	Analog output mute control
2	ZEROL	O	Zero flag for L-channel	16	IOUTR-	O	R-channel analog current output -
3	ZEROR	O	Zero flag for R-channel	17	IOUTR+	O	R-channel analog current output +
4	LRCK	I	Left and right clock	18	AGND1	-	Analog ground
5	DATA	I	Serial audio data input	19	VCOM1	-	Internal bias de-coupling pin
6	BCK	I	Bit clock input	20	VCOM2	-	Common voltage for I/V
7	SCKI	I	System clock input	21	IREF	-	Output current reference bias pin
8	DGND	-	Digital ground	22	VCOM3	-	Internal bias de-coupling pin
9	VDD	-	Digital supply, +3.3V	23	VCC1	-	Analog supply, +5 V
10	DEPMP0	I	De-emphasis control	24	VCC2	-	Analog supply, +5 V
11	DEMP1	I		25	IOUTL+	O	L-channel analog current output +
12	FMT0	I	Audio data format select	26	IOUTL-	O	L-channel analog current output -
13	FMT1	I		27	AGND2	I	Analog ground
14	FMT2	I		28	VCC3	I	Analog power supply, +5 V

■ IC BLOCK DIAGRAM

- **TC74VHC14FT** (XV890A00)
  Hex Inverter
  DM: IC006

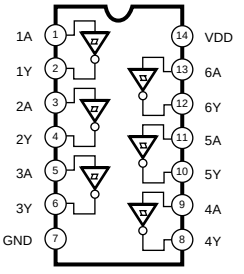

- **TC74VHC32FT** (XY945A00)
  74VHC32MTCX (X0299A00)
  Quad 2 Input OR
  DM: IC007

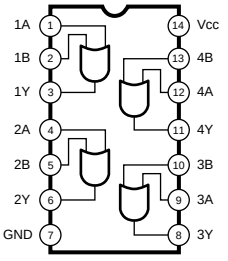

- **TC74VHCT245AFT** (XT744A00)
  74VHCT245AMTCX (X0295A00)
  Octal 3-State Bus Transceiver
  DM: IC009, 010

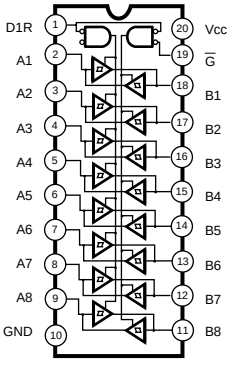

- **SN75C1168NSR** (XU073A00)
  Line Driver / Receiver
  DJK: IC002

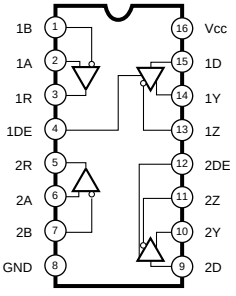

- **SC7SU04FEL** (XI348A00)
  TC7SU04F (XY447A00)
  Inverter Gate
  DJK: IC001

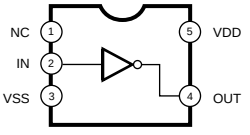

- **TC7WH32FU(TE12L)** (XY364A00)
  Dual 2 Input OR Gate
  DM: IC013

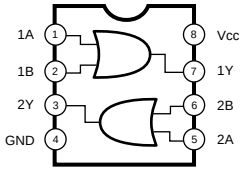

- **M5229FP** (XY487A00)
  7 Band Graphic Equalizer
  AJK: IC300, 400

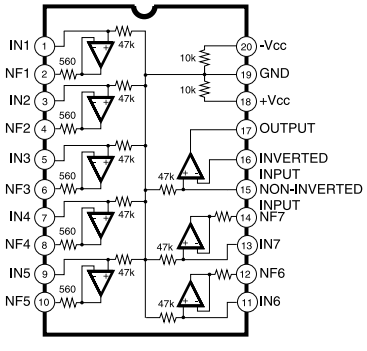

- **LA6517M-TE-R** (XT131A00)
  Dual Low Voltage Power Amplifier
  AJK: IC200

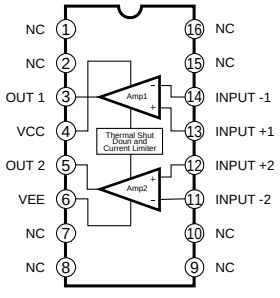

- **µPC4570G2** (XF291A00)
  Dual Operational Amplifier
  DM: IC033-35
  AJK: IC100
  PNL: IC073

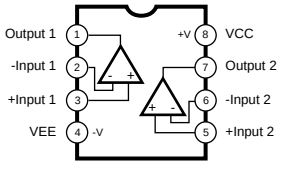

■ CIRCUIT BOARDS

AJK (X2246B0) 25
DJK (X2245C0) 28
DM (XZ592H0) 26/27
FU120L (XS882A0) 33
GHD EBUS L (XZ138D0) 35
GHD H (X2218A0) 37
GHD M (X2217A0) 36
HP (XQ390A0) 32
MA120 (XQ393E0) 29
MK SUB (XZ142B0) 34
MV2 (X2244B0) 32
NET1 (XT123B0) 29
PEDAL (DJK) (X2245C0) 28
PEDAL (SW) (X0193A0) 34
PL (XR898A0) 32
PNL (X2243D0) 30/31
PNR (X2244B0) 32/33
WML (X2248A0) 24
WMH (X2248A0) 24

Note : See parts list for details of circuit board conponent parts.

- WML Circuit Board
- WMH Circuit Board

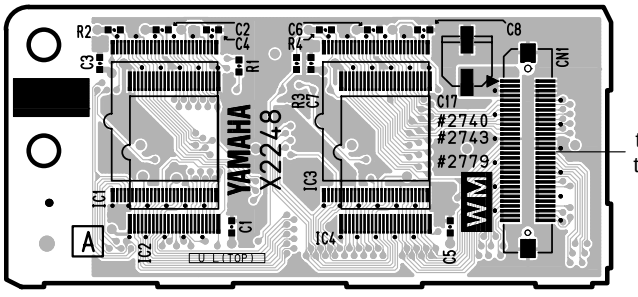

Component side

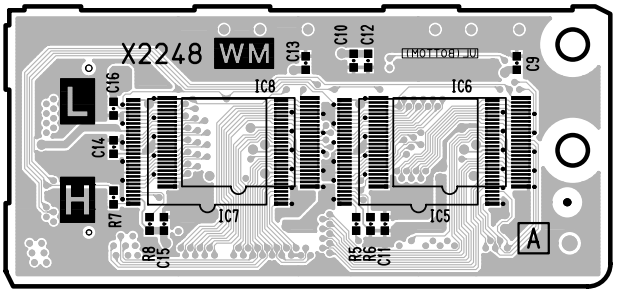

Pattern side

● AJK Circuit Board

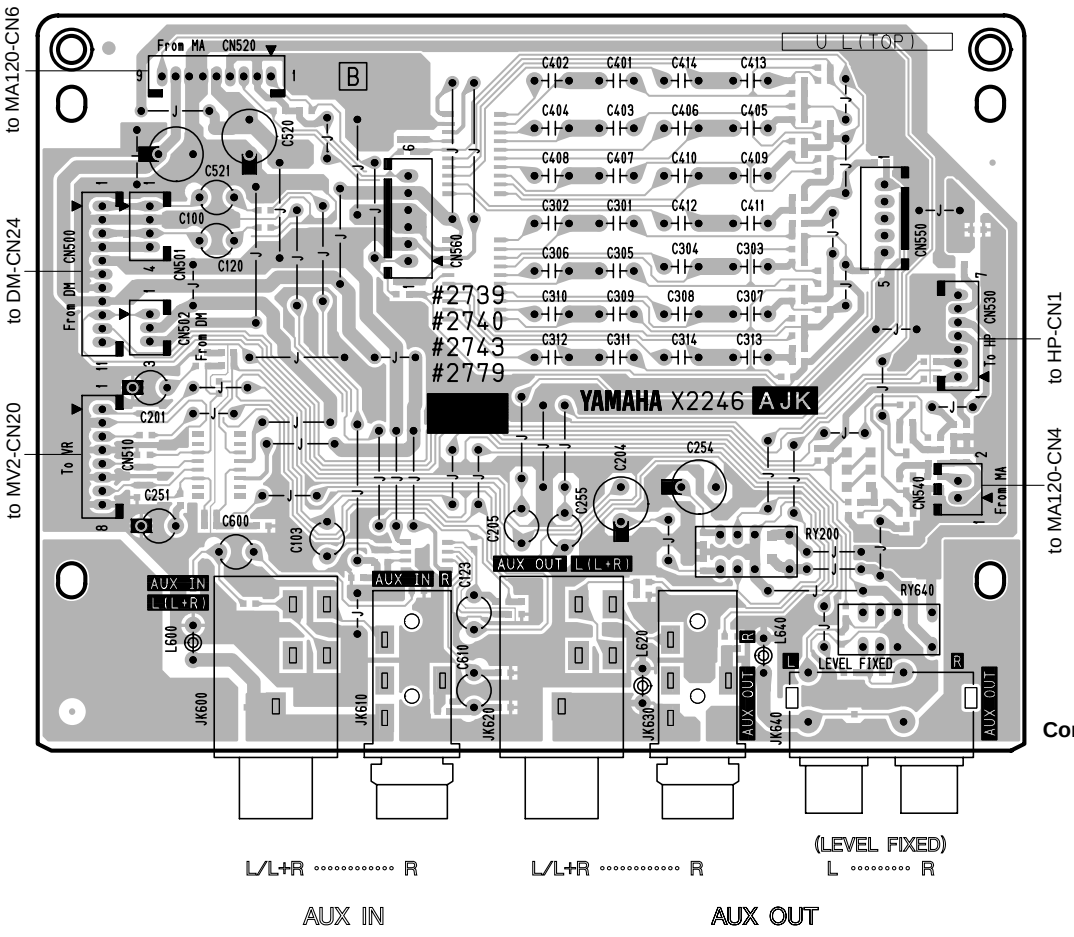

Component side

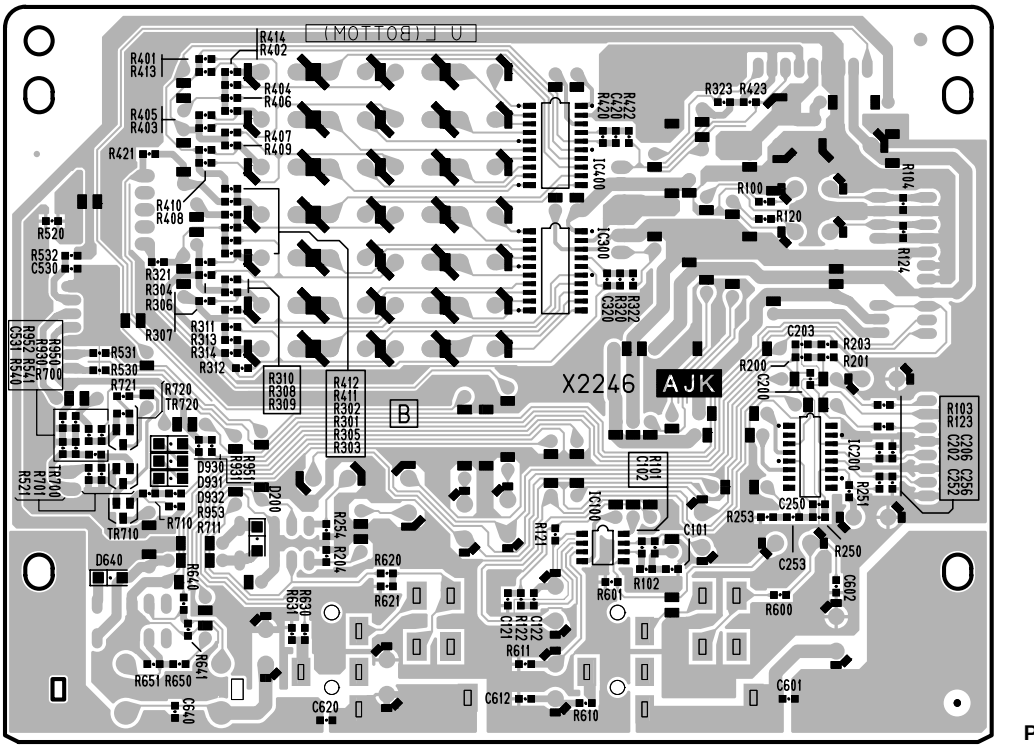

Pattern side

● DM Circuit Board (XZ592H0)

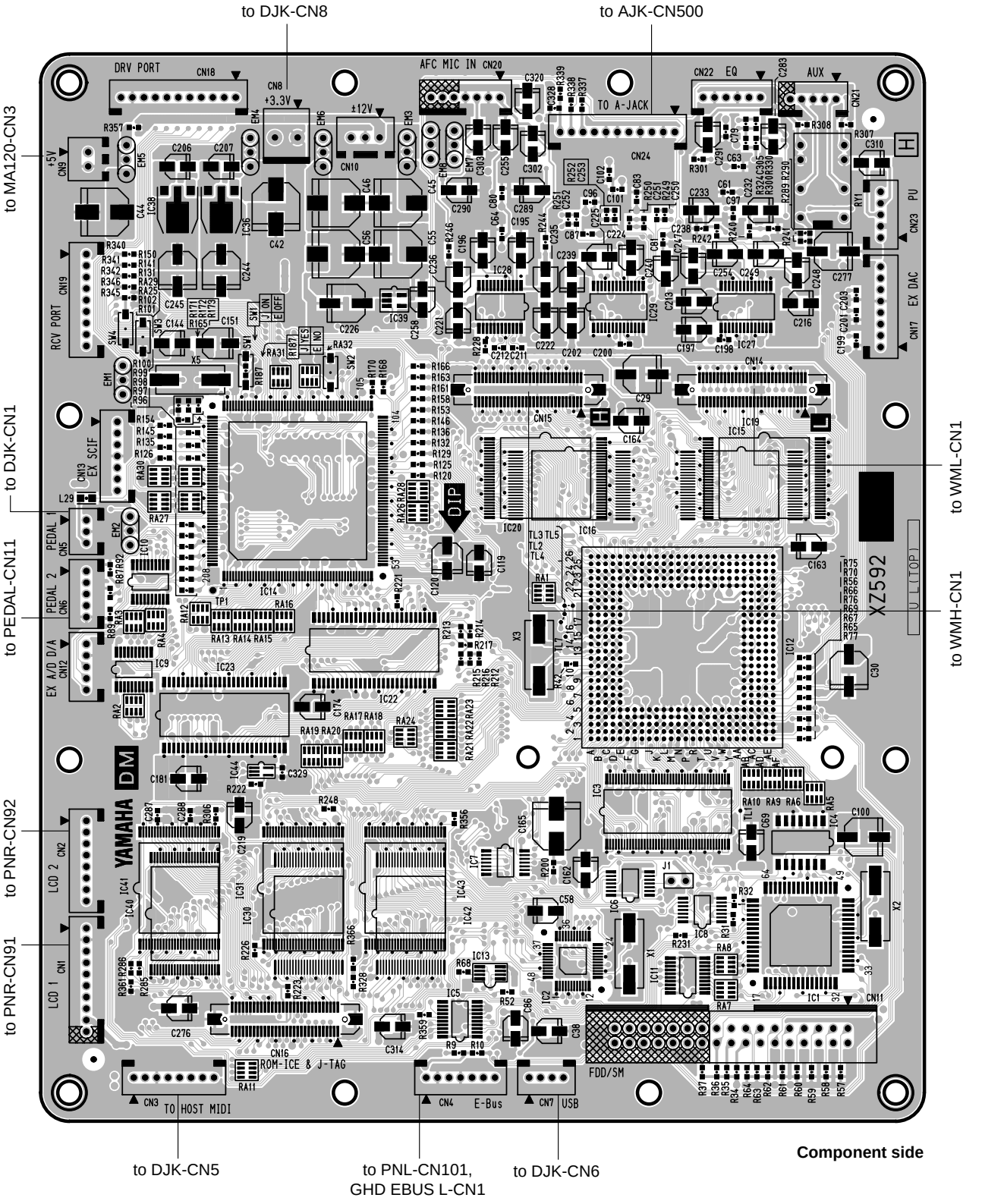

● DM Circuit Board (XZ592H0)

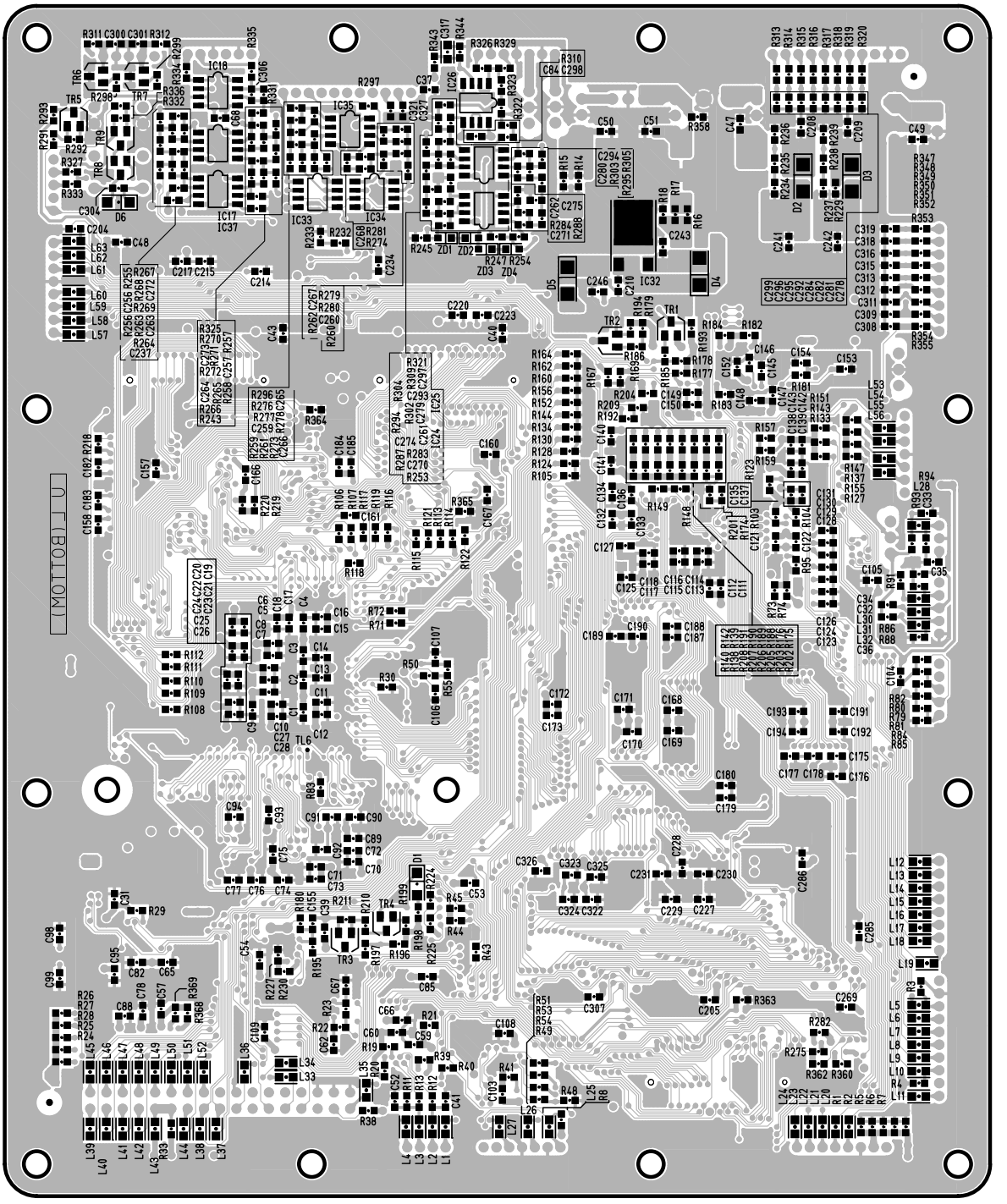

Pattern side

2NA-V755310 2

● DJK Circuit Board

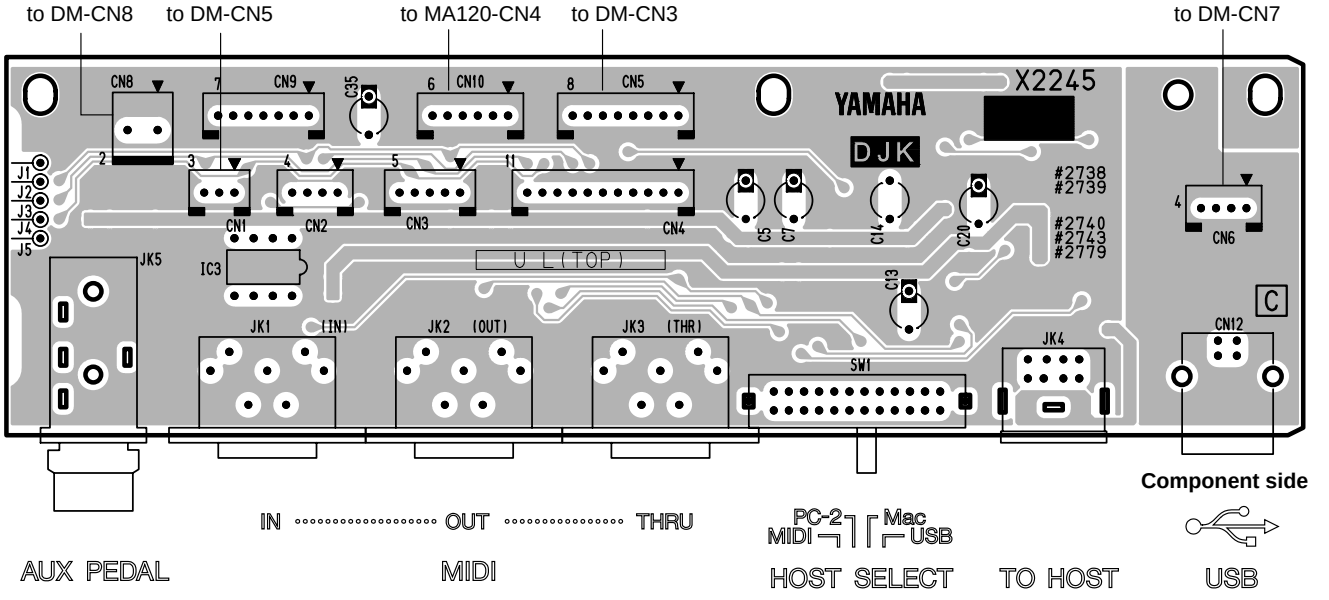

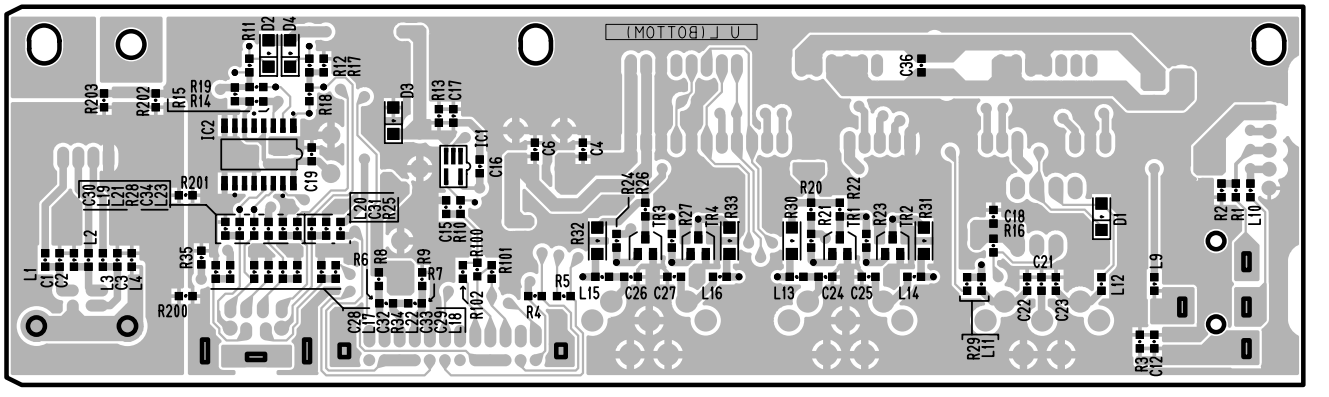

Pattern side

● PEDAL (DJK) Circuit Board

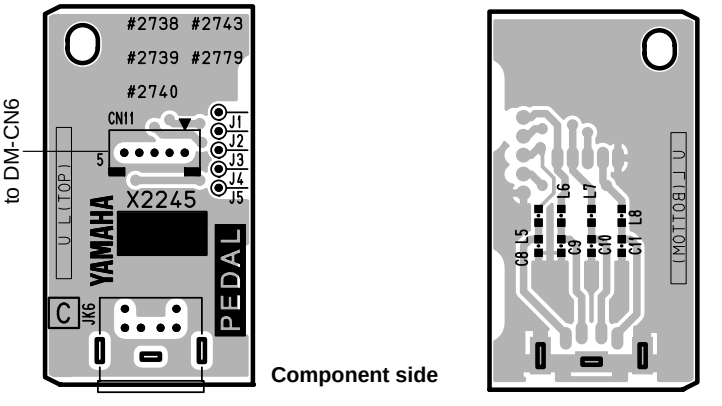

Component side

Pattern side

to PEDAL (SW)-CN1

DJK: 2NA-V849640 ⚠2

PEDAL (DJK): 2NA-V849640 ⚠2

● MA120 Circuit Board

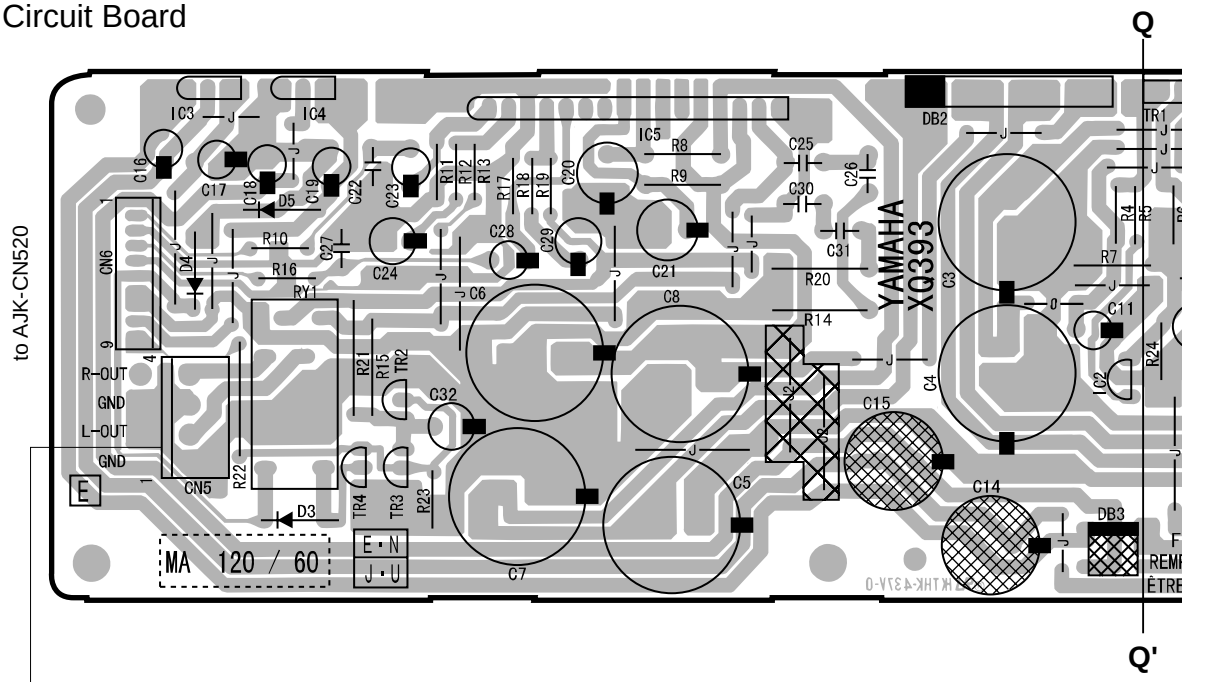

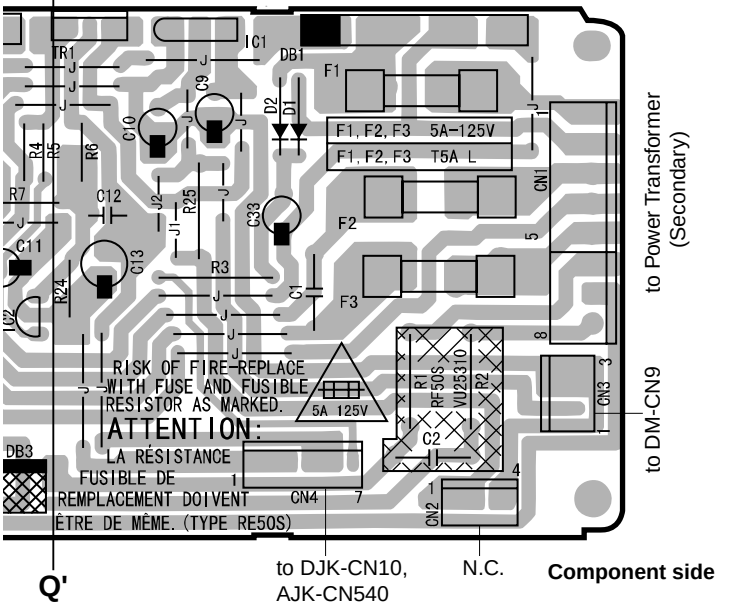

● NET1 Circuit Board

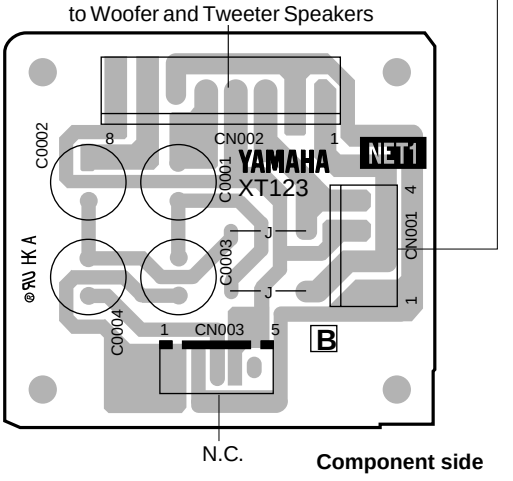

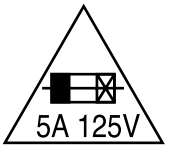

CAUTION: REPLACE WITH SAME TYPE 5A 125V FUSE.

ATTENTION: UTILISER UN FUSIBLE DE RECHANGE DE MÉME TYPE DE 5A 125V.

NOTE : The symbol (▬▮▬) shows Slow operating fuse.

MA120: 2NA-VT14340 ⚠3

NET1: 2NA-VY64290 ⚠1

● PNL Circuit Board

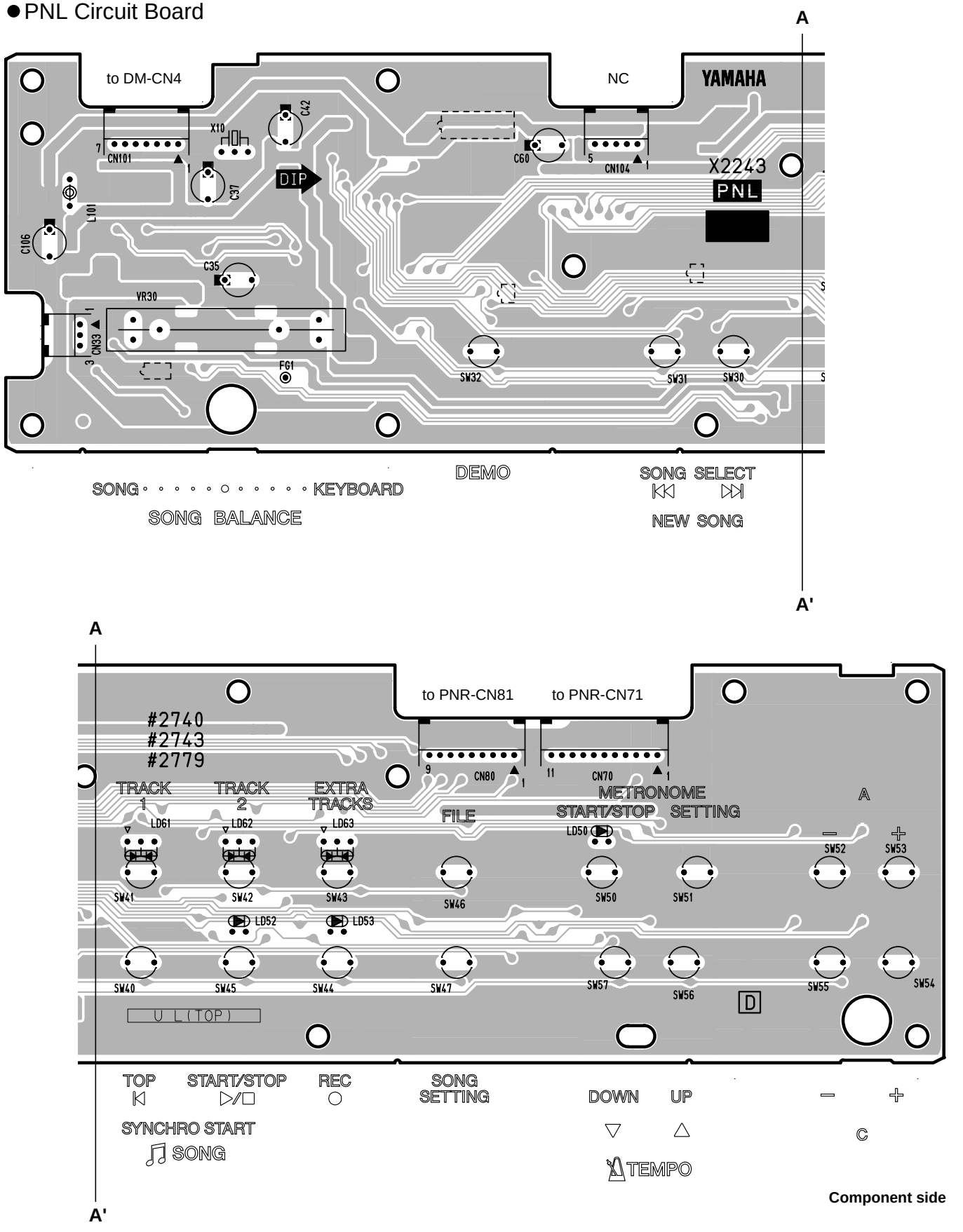

Component side

2NA-V845480 1

● PNL Circuit Board

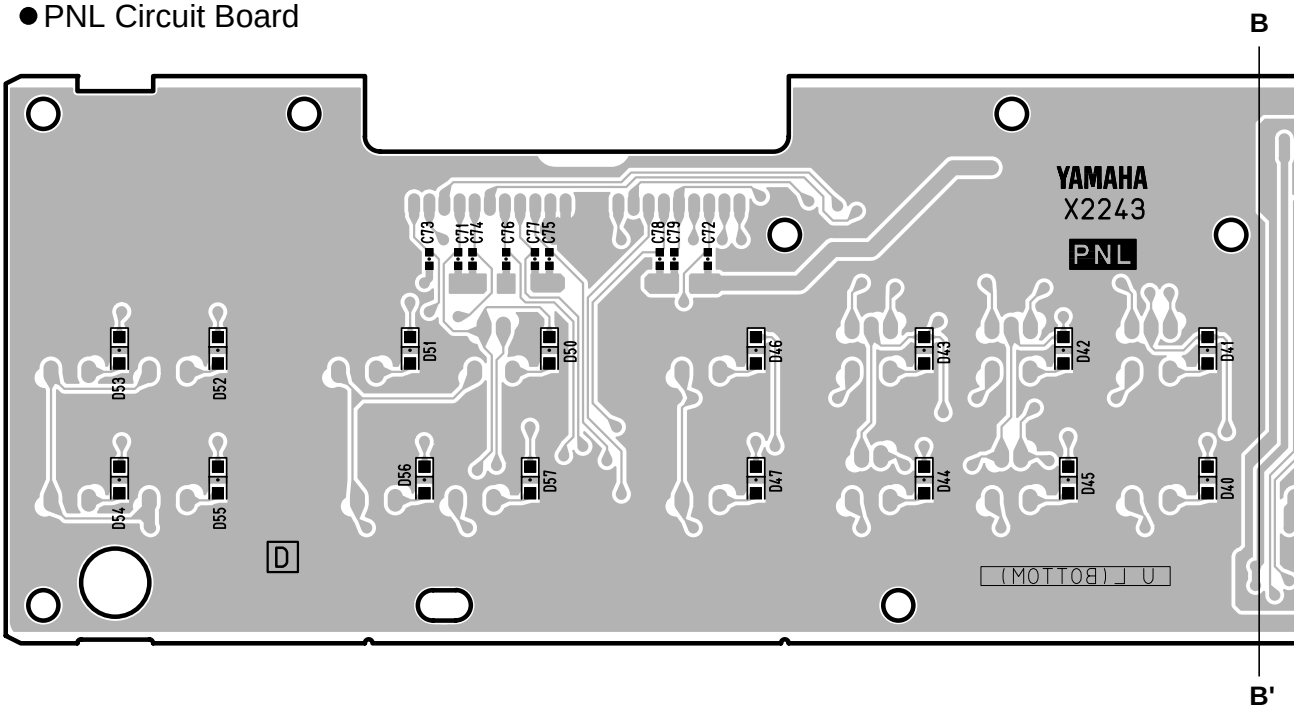

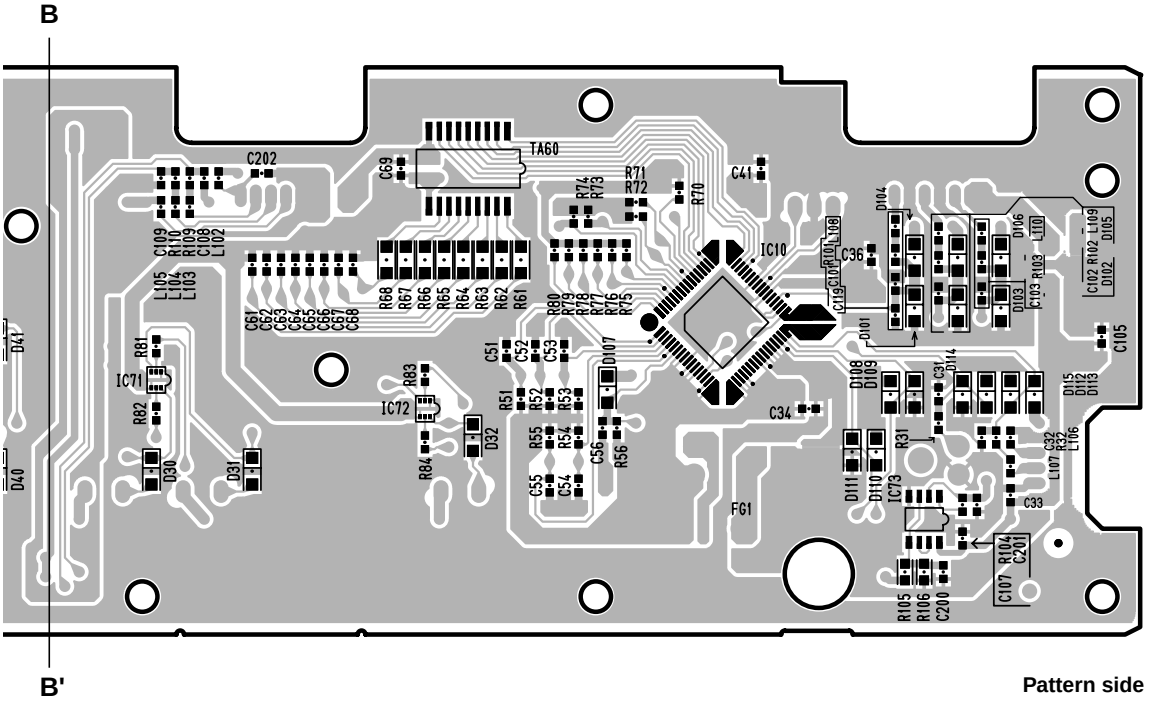

Pattern side

● PNR Circuit Board

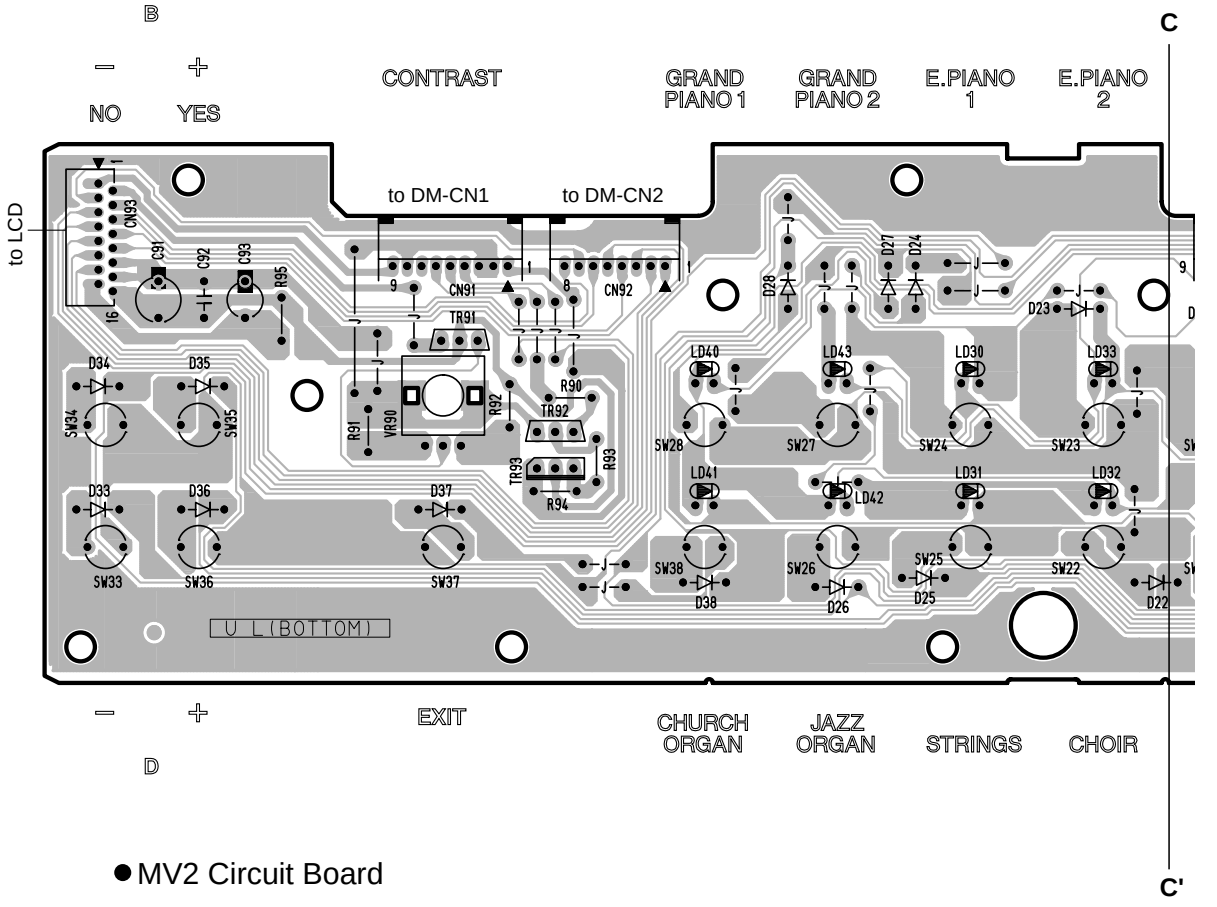

● MV2 Circuit Board

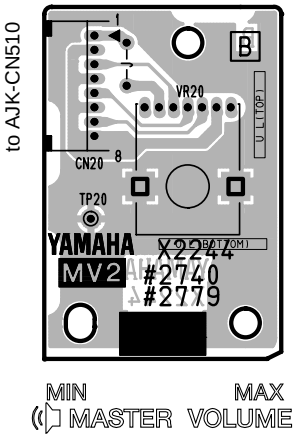

Component side

● HP Circuit Board

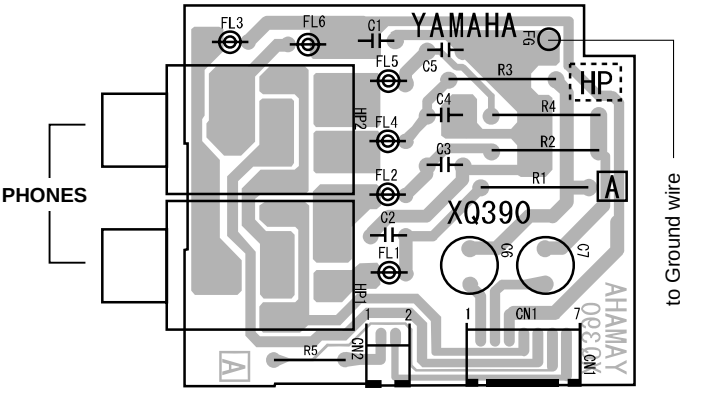

Component side to PL-CN1 to AJK-CN530

● PL Circuit Board

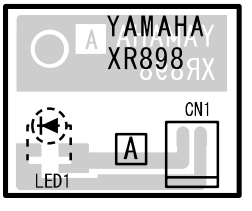

Component side

POWER indicator to HP-CN2

PNR: 2NA-V845520 ⚠1
MV2: 2NA-V845520 ⚠1
HP: 2NA-V004770 ⚠4
PL: 2NA-VN63740

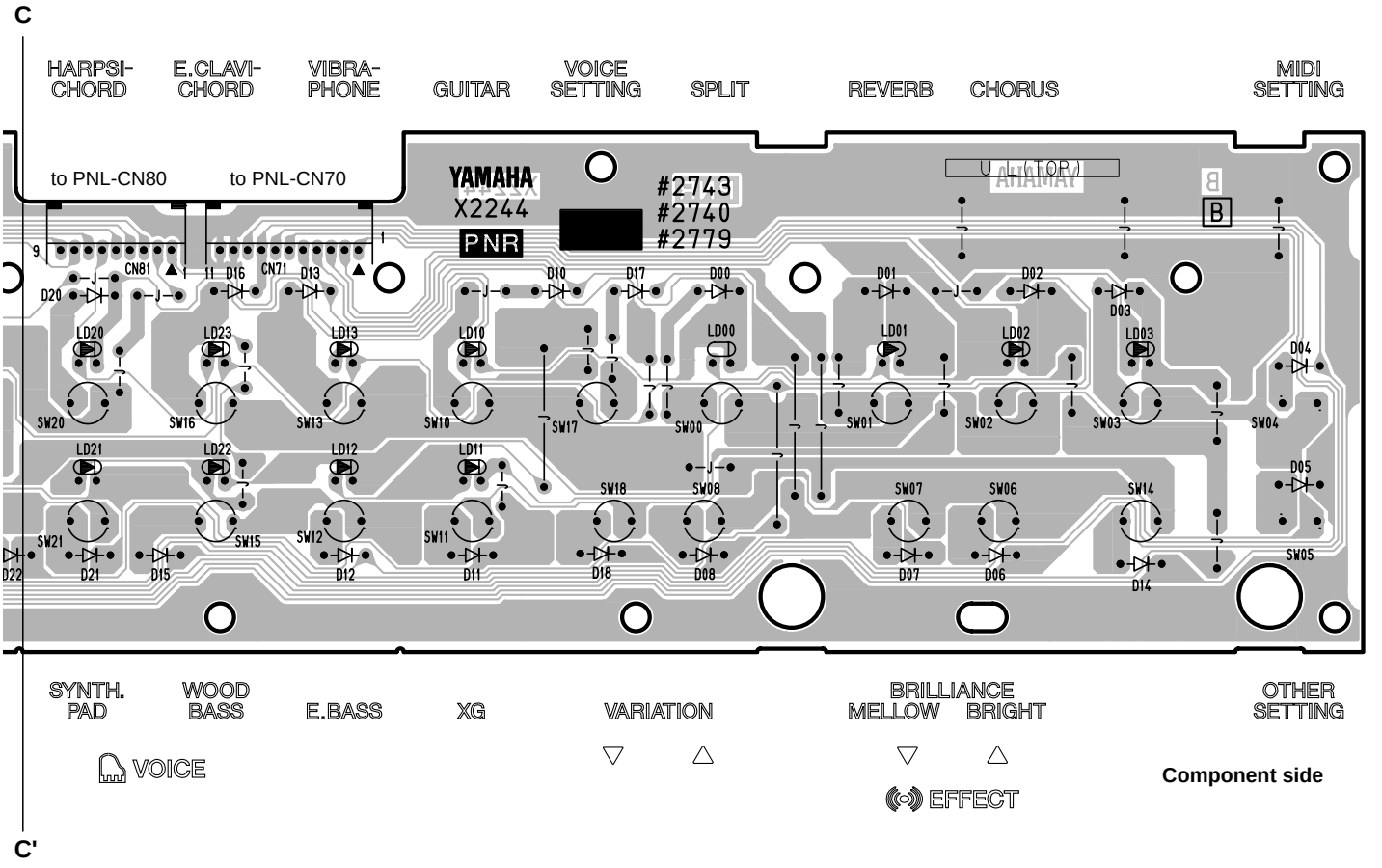

Component side

● FU120L Circuit Board

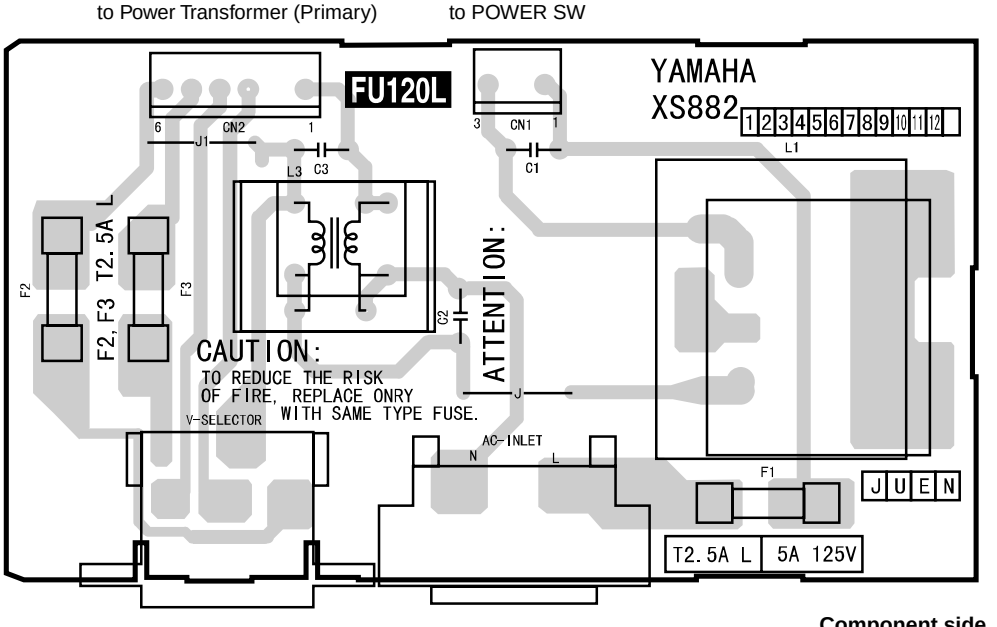

VOLTAGE SELECTOR AC INLET

Component side

PNR: 2NA-V845520 △1

FU120L: 2NA-VV65070 △2

● PEDAL (SW) Circuit Board

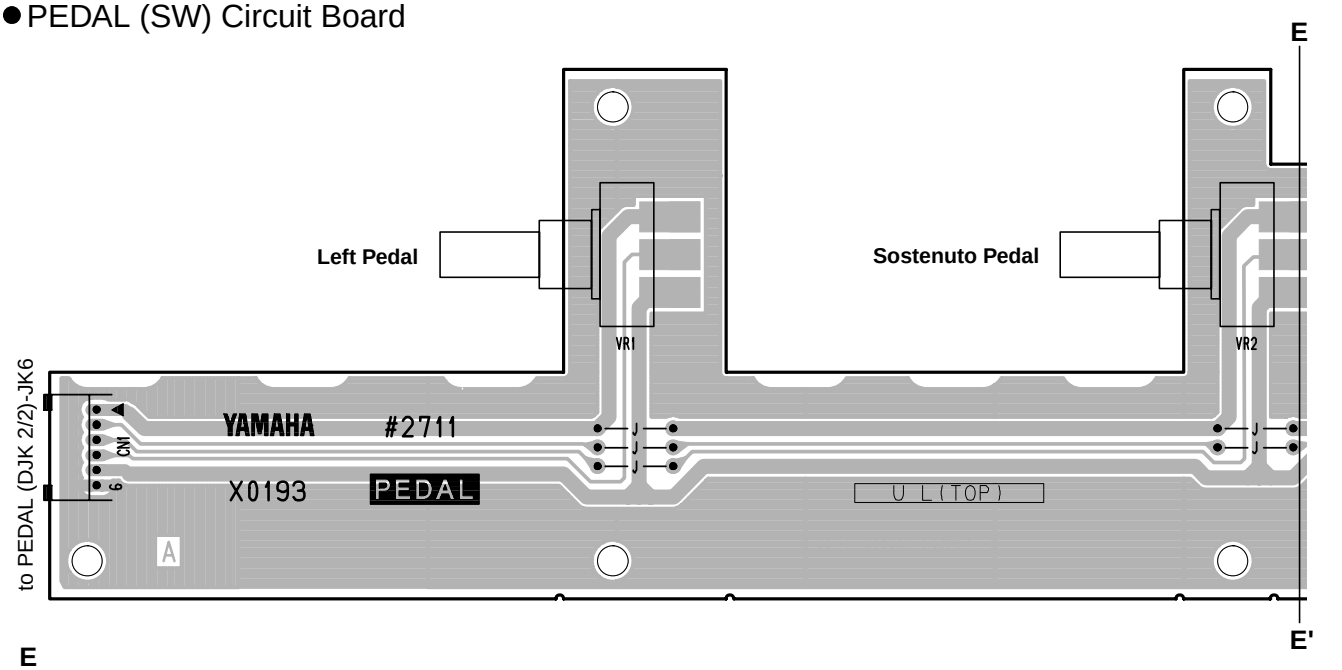

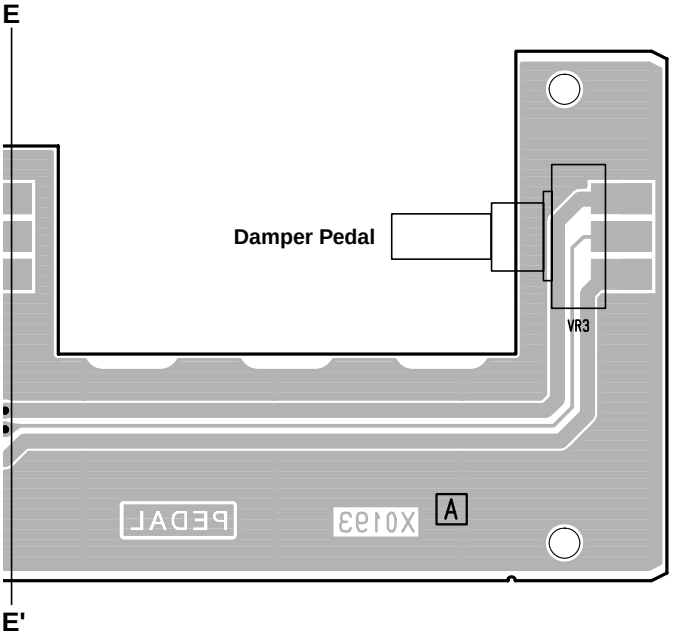

Component side

● MK SUB Circuit Board

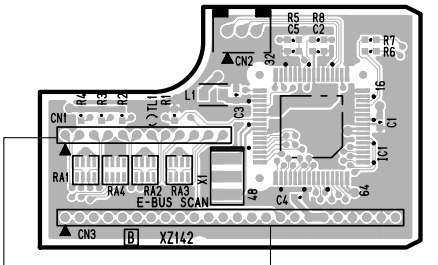

Component side

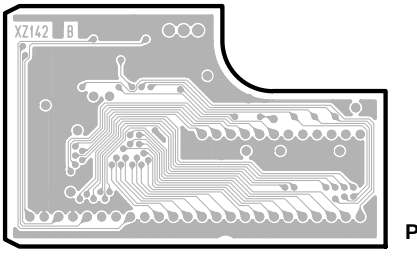

Pattern side

PEDAL (SW): 2NA-V767550
MK SUB:

● GHD EBUS L Circuit Board

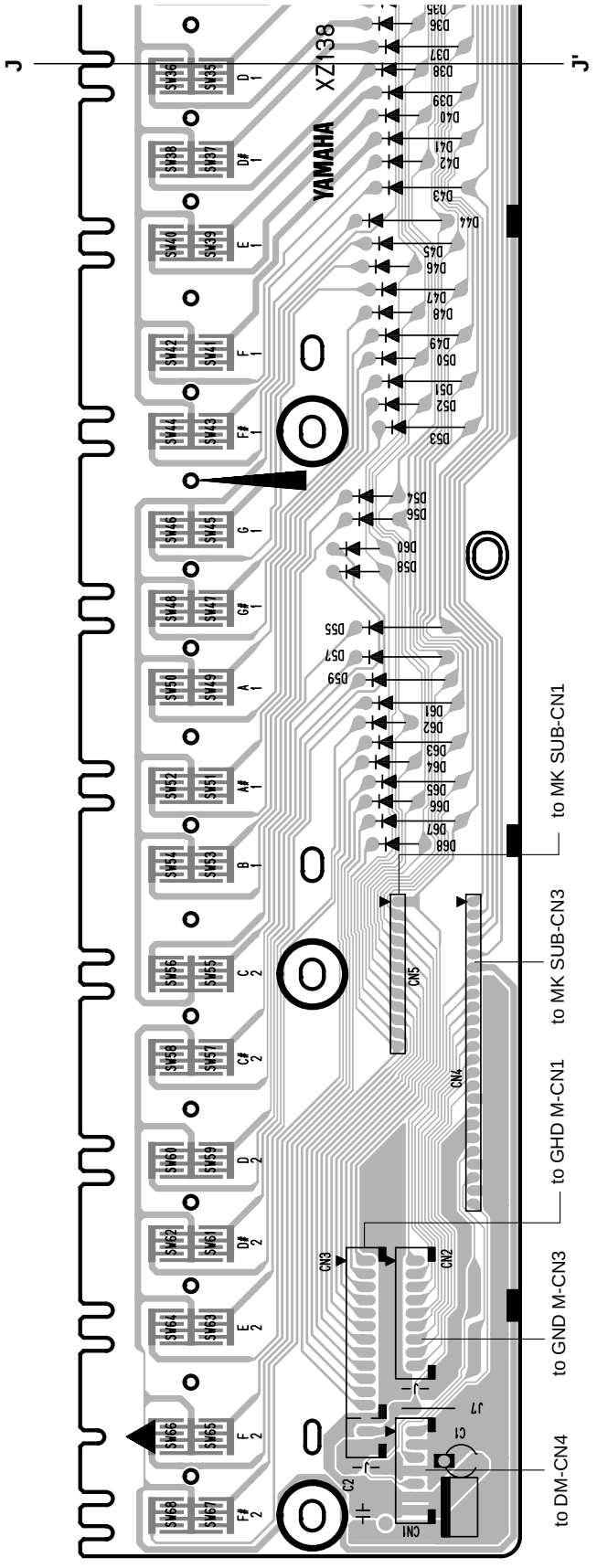

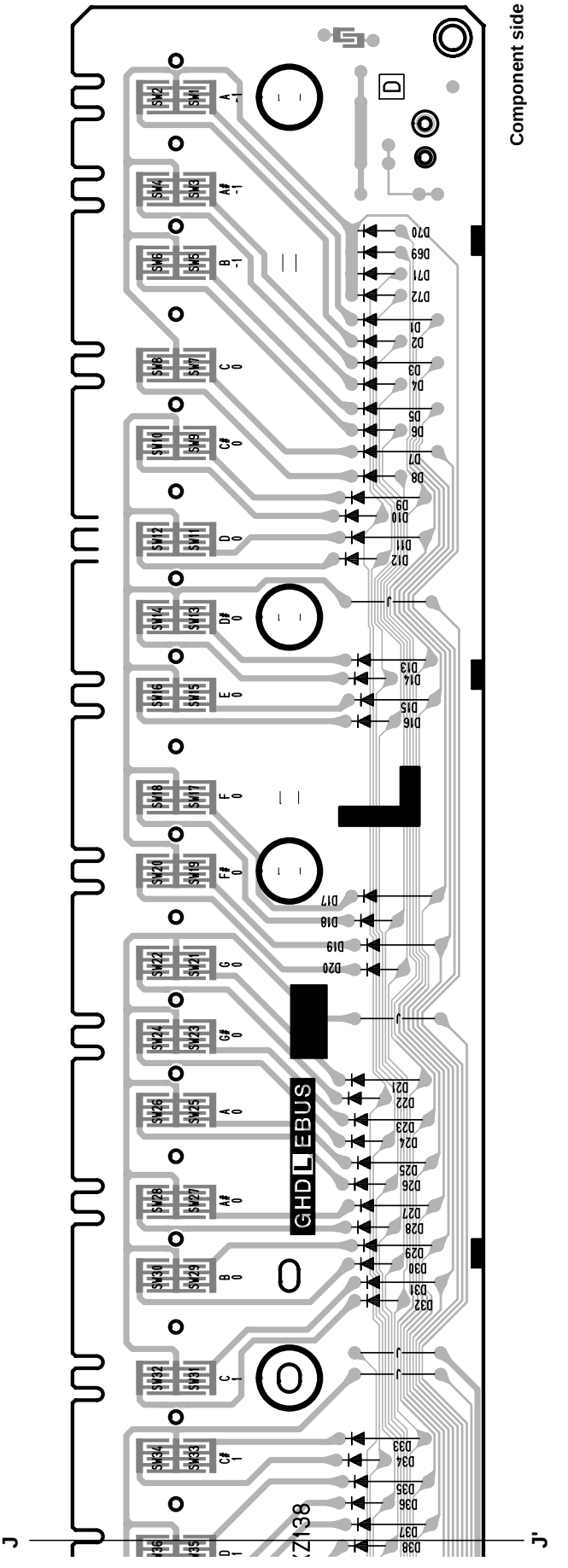

● GHD M Circuit Board

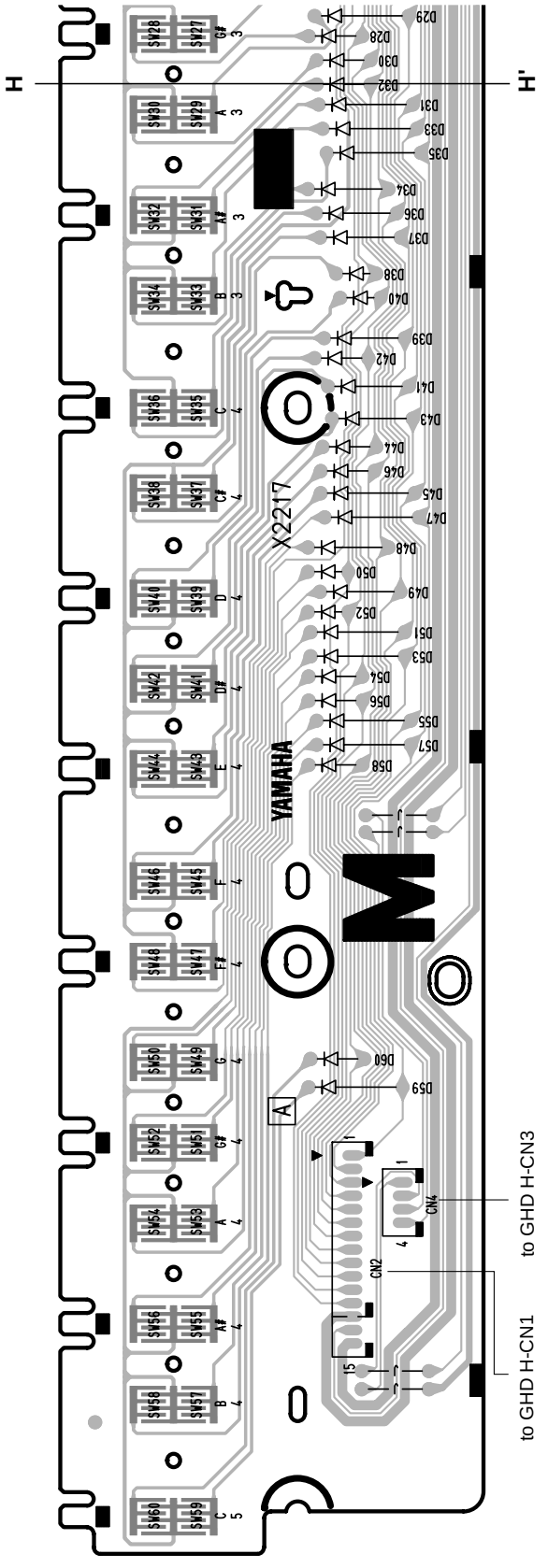

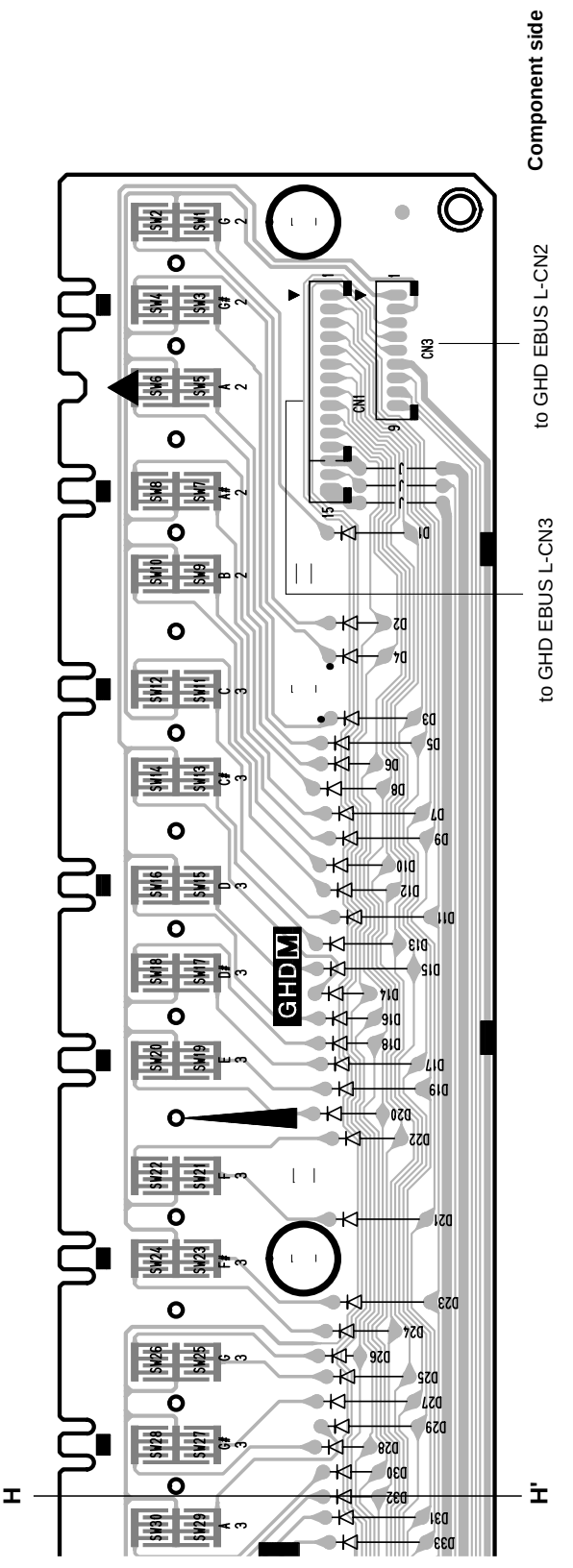

2NAK8-V852140

● GHD H Circuit Board

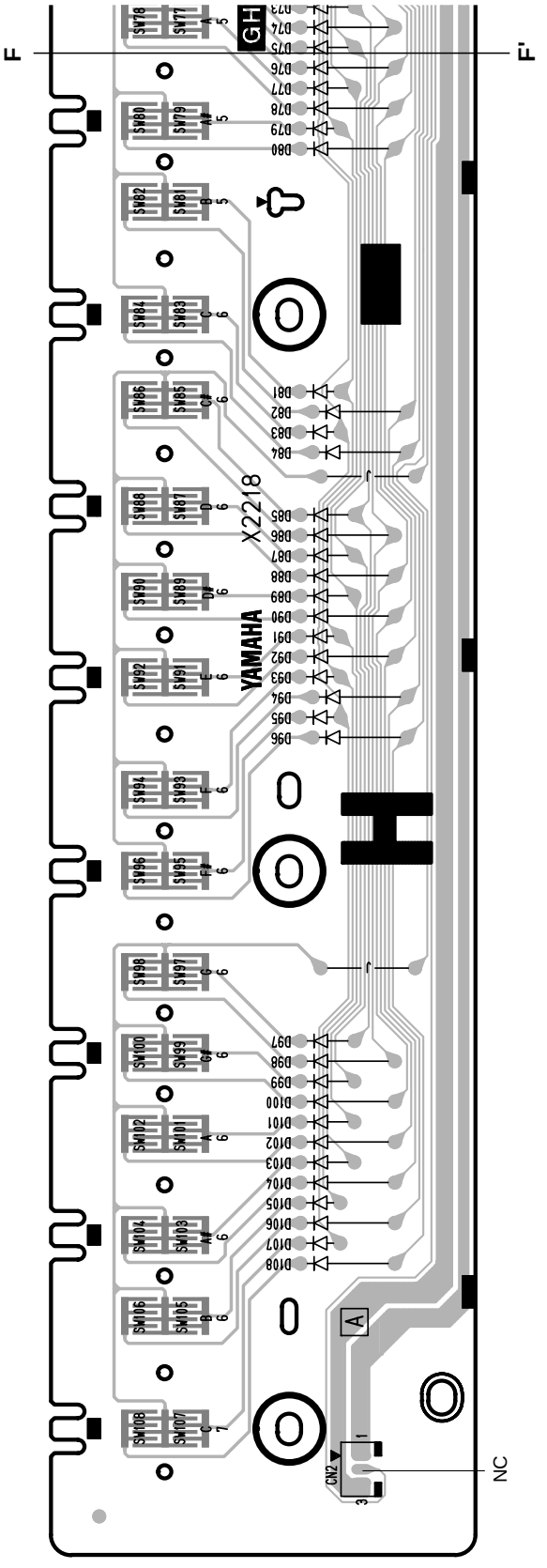

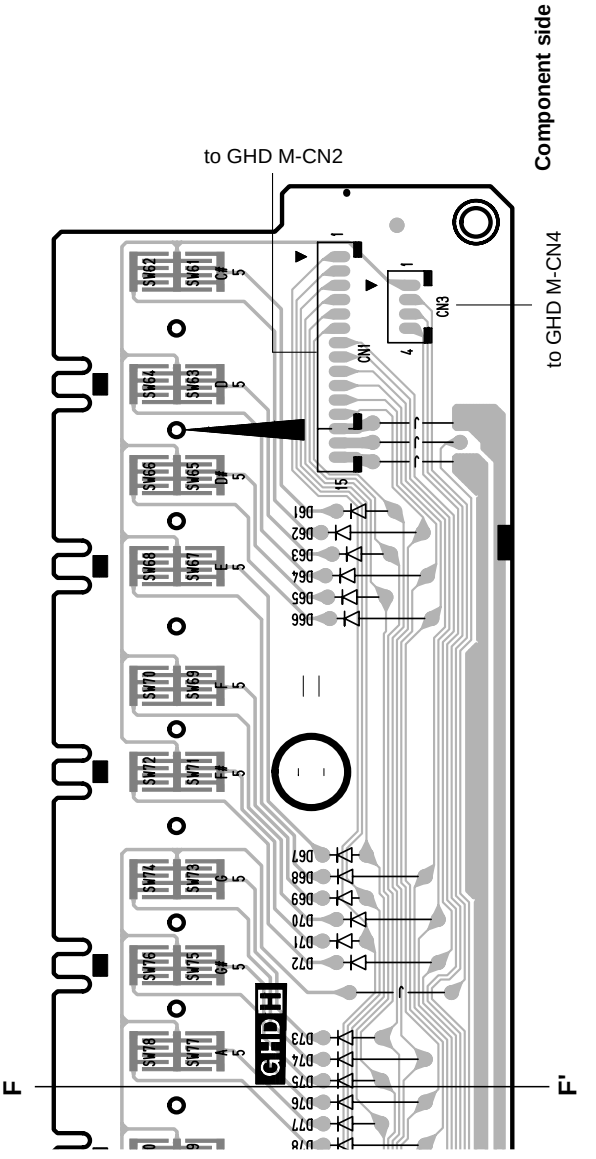

■ TEST PROGRAM

1. Preparation

1) Measuring instruments: Frequency counter, level meter (with JIS-C filter)
Note) [PHONES] jack: 33Ω load, [AUX OUT] jack: 10kΩ load
2) Jigs: Foot volume (FC-7), MIDI cable

2. How to enter the Test Program

While pressing the [C#2], [F2] and [G#2] keys, turn on the [POWER] switch.

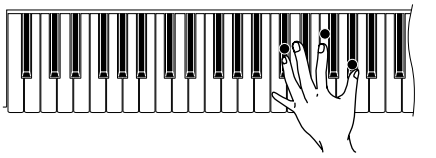

3. Proceeding through the Test Program

When the test program is activated, the sign “TEST CLP 150” appears on the LCD display.
Select the test program item by pressing the [UP] or [DOWN] button of [TEMPO].
Press the [START/STOP] button of [METRONOME] to execute testing.

When the test result is OK, press the [START/STOP] button of [METRONOME] to return to the screen of test items for selection. Select the next test item by pressing the [UP] or [DOWN] button of [TEMPO]. When the test result is OK, an asterisk (*) is added in front of its item name on display.

When the test result is NG, press the [DEMO] button to return to the screen of test items for selection and then turn off the [POWER] switch to end the test program.

4. Test program list

No.	LCD	Function and judgment criteria
1	001: Main Version	Displays the Main ROM version. The ROM (Program) version is displayed.
2	002: Wave Version	Displays the Wave ROM version. The Wave ROM version is displayed.
3	003: Main Rom Chk1	Checks ROMs that are connected to the CPU bus. Outputs the C4 sine wave when the check result is OK and “Main Rom Chk1 OK” is displayed on the LCD display.
4	004: Main Ram Chk1	Checks RAMs that are connected to the CPU bus. Outputs the C4 sine wave when the check result is OK and “Main Ram Chk1 OK” is displayed on the LCD display.
5	005: FlashRom Chk1	Checks Flash Memories that are connected to the CPU bus. Outputs the C4 sine wave when the check result is OK and “Flash Chk1 OK” is displayed on the LCD display.
6	006: WaveRom Chk1	Checks Wave ROMs. Outputs the C4 sine wave when the check result is OK and “WaveRom Chk1 OK” is displayed on the LCD display.
8	008: EffectRam Chk	Checks the effect RAM. Outputs the sine wave (C4) when the check result is OK and displays “effectRam Chk OK” is displayed on the LCD display.
9	009: TG Chk	Checks the Sound Source (Autoscale). Sequentially outputs the sine wave by changing the tone of the sound source from the low keys (from C2 to G4). Check by hearing that the produced sound is free from noise and abnormal sound.
10	010: Pitch Chk	Checks the pitch. Connect the frequency counter to the [PHONES] jack. Outputs the sine wave at 440.5 ± 0.2Hz (PAN = Center) when the test is executed. Connect the level meter (with a JIS-C filter) to the [PHONES] jack. Set the [MASTER VOLUME] at the MIN. position and check the output level. PHONES L, R: -90.0dBm or less

No.	LCD	Function and judgment criteria
11	011: Output R	Checks the R channel output. Connect the level meter (with a JIS-C filter) to each output terminal. Set the [MASTER VOLUME] at the MAX. position and check the output level of the R channel. (1kHz sine wave, PAN = R) PHONES L: -40.0dBm or less　PHONES R: +2.0dBm ± 2dB AUX OUT L/L+R: -50dBm or less　AUX OUT R: -1.5dBm ± 2dB AUX OUT (LEVEL FIXED)L: -50dBm or less　AUX OUT (LEVEL FIXED)R: -2.0dBm ± 2dB
12	012: Output L	Checks the L channel output. Connect the level meter (with a JIS-C filter) to each terminal. Set the [MASTER VOLUME] at the MAX. position and check the output level of the L channel. (1kHz sine wave, PAN = R) PHONES L: +2.0dBm ± 2dB　PHONES R: -40dBm or less AUX OUT L/L+R: -1.5dBm ± 2dB　AUX OUT R: -50dBm or less AUX OUT (LEVEL FIXED)L: -2.0dBm ± 2dB　AUX OUT (LEVEL FIXED)R: -50dBm or less
13	013: EQ Low	Checks the EQ-LOW frequency. Check that 65.4Hz (C1) sine wave is output. (PAN = Center)
14	014: EQ Mid	Checks the EQ-MID frequency. Check that 523Hz (C4) sine wave is output. (PAN = Center)
15	015: EQ High	Checks the EQ-HIGH frequency. Check that 4186Hz (C7) sine wave is output. (PAN = Center)
16	016: D/A Noise	This test item is included in the factory inspection.
17	017: SW, LED Chk	Checks the switches on the panel and LED. Press the switches as their names are indicated on the LCD. When each switch is pressed, its pre-assigned note is output. (See Table 1 on p. 41.) When the switch with LED is pressed, that LED will light up at the same time. Upon completion of checking all switches, “SW. LED Chk OK” is displayed on the LED display.
18	018: All LED On	Check that all LEDs light up.
19	019: Red LED On	Check that all red LEDs light up.
20	020: Green LED On	Check that all green LEDs light up.
21	021: All LCD On	Check that all LCD dots light up.
22	022: All LCD Off	Check that all LCD dots go off.
23	023: SoftPedal Chk	Checks the soft pedal. Check that the C3 note is output when the test is executed and the soft pedal is depressed and the C4 note is output when it is released. For the check result, check that “Soft Test OK” is displayed on the LCD display.
24	024: SostenutoPedalChk	Checks the sostenute pedal. Check that the C3 note is output when the test is executed and the sostenute pedal is depressed and the C4 note is output when it is released. For the check result, check that “Sostenute Test OK” is displayed on the LCD display.
25	025: DamperPedalChk	Checks the damper pedal. Check that the C3 note is output when the damper pedal is depressed and the C4 note is output when it is released. For the check result, check that “Damper Test OK” is displayed on the LCD display.
26	026: ExpPedalChk	Connect the foot volume (FC-7) to the [AUX PEDAL] jack. Check that the C3 note is output when the pedal is depressed fully to the back (DOWN) and the C4 note is output when it is depressed fully to the front (UP). For the check result, check that “Aux Pedal OK” is displayed on the LCD display.

No.	LCD	Function and judgment criteria
27	027: Song Balance Chk	Checks the song balance. When the [SONG BALANCE] control is set to the “SONG” position, the C3 note is output and “SONG BAL MIN” is displayed on the LCD display, when it is set to the “KEYBOARD” position, the G3 note is output and “SONG BAL MAX” is displayed and when it is set back to the “CENTER” position, the C4 note is output and the check result is displayed on the LCD display. Check that “SONG BAL OK” is displayed.
29	029: Midi Chk	After connecting the [MIDI in] jack and the [MIDI OUT] jack with a MIDI cable, execute the test. (Keep the [HOST SELECT] switch at the MIDI position.) Then the C4 tone is output and the check result is displayed on the LCD display. Check that “Midi Chk OK” is displayed.
30	030: To Host Chk	Short-circuit between pins 3 and 5, pins 6 and 8 of the [TO HOST] terminal and execute the test. Change the [HOST SELECT] switch position according to the LCD indication and check that the following tone is output at each postiion. (C3 at USB, C4 at PC and C5 at MAC). For the check result, check that “To Host Chk OK” is displayed on the LCD display.
31	031: USB Chk	Checks the USB jack. Connect the [USB] jack and the personal computer with a USB cable and set the [HOST SELECT] switch to the USB position. When the test is executed, “USB Chk In” is displayed on the LCD display. When the cable is disconnected, “USB Chk Out” is displayed on the LCD display. For the check result, check that the C4 tone is output and “USB Chk OK” is displayed. (Set to the Thru On position on the computer side.)
32	032: Keyboard Type Chk	Checks the keyboard type. When the test is executed, the C4 tone is output and check result is displayed on the LCD display. Check that “Keyboard Type Chk OK” is displayed.
37	037: Main Rom Chk2	Checks all the ROMs that are connected to the CPU bus. For the check result, check that “Main Rom Chk2 OK” is displayed on the LCD display.
38	038: Main Ram Chk2	Checks all the RAMs that are connected to the CPU bus. For the check result, check that “Main Ram Chk2 OK” is displayed on the LCD display.
39	039: Flash Rom Chk2	Checks all the flash memories that are connected to the CPU bus. For the check result, check that “Flash Chk2 OK” is displayed on the LCD display. It takes about 50 seconds.
40	040: WaveRom Chk2	Checks the WAVE ROMs. For the check result, check that “Wave Rom Chk2 OK” is displayed on the LCD display. It takes about 30 seconds.
41	041: EffectRam Chk2	Checks the Effect ROMs. For the check result, check that “Effect Ram Chk2 OK” is displayed on the LCD display. It takes about 10 seconds.
42	042: Factory Set	When this test is executed, the factory preset data will be set in the Flash ROMs when the power is turned on the next time. Check that “Factory Set OK” is displayed on the LCD display. It takes about 20 seconds.
43	043: Test Exit	When the test is executed, the test program will exit and the play mode will be set.

* 0 dBm = 0.775 V

Table 1

Order	Switch Name	Note	Order	Switch Name	Note
1	DEMO	G1	31	VIBRAPHONE	C#4
2	SONG SELECT ⏮	G#1	32	GUITAR	D4
3	SONG SELECT ⏭	A1	33	CHURCH ORGAN	D#4
4	SONG TRACK 1	A#1	34	JAZZ ORGAN	E4
5	SONG TRACK 2	B1	35	STRINGS	F4
6	SONG EXTRA TRACKS	C2	36	CHOIR	F#4
7	SONG TOP	C#2	37	SYNTH. PAD	G4
8	SONG START/STOP	D2	38	WOOD BASS	G#4
9	SONG REC	D#2	39	E. BASS	A4
10	FILE	E2	40	XG	A#4
11	SONG SETTING	F2	41	VOICE SETTING	B4
12	METRONOME START/STOP	F#2	42	SPLIT	C5
13	METRONOME SETTING	G2	43	REVERB	C#5
14	TEMPO DOWN	G#2	44	CHORUS	D5
15	TEMPO UP	A2	45	VARIATION DOWN	D#5
16	LCD A -	A#2	46	VARIATION UP	E5
17	LCD A +	B2	47	BRILLIANCE MELLOW	F5
18	LCD C -	C3	48	BRILLIANCE BRIGHT	F#5
19	LCD C +	C#3	49	MIDI SETTING	G5
20	LCD B -	D3	50	OTHER SETTING	G#5
21	LCD B +	D#3			
22	LCD D -	E3			
23	LCD D +	F3			
24	EXIT	F#3			
25	GRAND PIANO1	G3			
26	GRAND PIANO2	G#3			
27	E.PIANO1	A3			
28	E.PIANO2	A#3			
29	HARPSICHORD	B3			
30	E.CLAVICHORD	C4			

● Initialization

The system will be initialized and the factory preset state will be restored when the [POWER] switch is pressed while pressing the highest (rightmost) white key on the keyboard.

■ MIDI IMPLEMENTATION CHART

YAMAHA [Clavinova] MIDI Implementation Chart Date : 25 Dec 2001
Model: CLP-170/150 Version : 1.0

Function		Transmitted	Recognized	Remarks
Basic	Default	1–16	1–16	
Channel	Changed	1–16	1–16	
Mode	Default	3	3	
	Messages	x	x	
	Altered	**********	x	
Note		0–127	0–127	
Number:	True voice	**********	0–127	
Velocity	Note ON	o 9nH , v = 1–127	o 9nH , v = 1–127	
	Note OFF	x 9nH , v = 0	x	
After Touch	Key's	x	x	
	Ch's	x	o	
Pitch Bend		o	o0–24 semi	
Control	0, 32	o	o	Bank Select
Change	1	x	o	Modulation
	5	x	o	Portament Time
	7, 10, 11	o	o	
	6, 38	o	o	Data Entry
	64, 66, 67	o	o	
	65	x	o	Portament
	71 , 74	o	o	Sound Controller
	72 , 73	x	o	Sound Controller
	84	x	o	Portament Control
	91, 93	o	o	Effect Depth
	94	x	o	Effect Depth
	96–97	x	o	RPN Inc,Dec
	98–99	x	o	NRPN LSB,MSB
	100–101	o	o	RPN LSB,MSB
	120	x	o	All Sound Off
Prog		o 0–127	o 0–127	
Change:	True #	**********		
System Exclusive		o	o	
Common :	Song Pos.	x	x	
:	Song Sel.	x	x	
:	Tune	x	x	
System :	Clock	o	x	
Real Time :	Commands	o	o	
Aux :	Local ON/OF	x	x	
:	All Notes OFF	x	o	
Messages :	Active Sense	o	o	
:	Reset	x	x	
Notes:				

Mode 1 : OMNI ON , POLY Mode 2 : OMNI ON ,MONO o : Yes
Mode 3 : OMNI OFF, POLY Mode 4 : OMNI OFF,MONO x : No

MIDI Data Format / MIDI-Datenformat / Format des données MIDI / Formato de datos MIDI

Many MIDI messages listed in the MIDI Data Format are expressed in decimal numbers, binary numbers and hexadecimal numbers. Hexadecimal numbers may include the letter “H” as a suffix.
Also, “n” can freely be defined as any whole number. To enter data/values, refer to the table below.

decimal	hexadecimal	binary
0	00	0000 0000
1	01	0000 0001
2	02	0000 0010
3	03	0000 0011
4	04	0000 0100
5	05	0000 0101
6	06	0000 0110
7	07	0000 0111
8	08	0000 1000
9	09	0000 1001
10	0A	0000 1010
11	0B	0000 1011
12	0C	0000 1100
13	0D	0000 1101
14	0E	0000 1110
15	0F	0000 1111
16	10	0001 0000
17	11	0001 0001
18	12	0001 0010
19	13	0001 0011
20	14	0001 0100
21	15	0001 0101
22	16	0001 0110
23	17	0001 0111
24	18	0001 1000
25	19	0001 1001
26	1A	0001 1010
27	1B	0001 1011
28	1C	0001 1100
29	1D	0001 1101
30	1E	0001 1110
31	1F	0001 1111

decimal	hexadecimal	binary
32	20	0010 0000
33	21	0010 0001
34	22	0010 0010
35	23	0010 0011
36	24	0010 0100
37	25	0010 0101
38	26	0010 0110
39	27	0010 0111
40	28	0010 1000
41	29	0010 1001
42	2A	0010 1010
43	2B	0010 1011
44	2C	0010 1100
45	2D	0010 1101
46	2E	0010 1110
47	2F	0010 1111
48	30	0011 0000
49	31	0011 0001
50	32	0011 0010
51	33	0011 0011
52	34	0011 0100
53	35	0011 0101
54	36	0011 0110
55	37	0011 0111
56	38	0011 1000
57	39	0011 1001
58	3A	0011 1010
59	3B	0011 1011
60	3C	0011 1100
61	3D	0011 1101
62	3E	0011 1110
63	3F	0011 1111

decimal	hexadecimal	binary
64	40	0100 0000
65	41	0100 0001
66	42	0100 0010
67	43	0100 0011
68	44	0100 0100
69	45	0100 0101
70	46	0100 0110
71	47	0100 0111
72	48	0100 1000
73	49	0100 1001
74	4A	0100 1010
75	4B	0100 1011
76	4C	0100 1100
77	4D	0100 1101
78	4E	0100 1110
79	4F	0100 1111
80	50	0101 0000
81	51	0101 0001
82	52	0101 0010
83	53	0101 0011
84	54	0101 0100
85	55	0101 0101
86	56	0101 0110
87	57	0101 0111
88	58	0101 1000
89	59	0101 1001
90	5A	0101 1010
91	5B	0101 1011
92	5C	0101 1100
93	5D	0101 1101
94	5E	0101 1110
95	5F	0101 1111

decimal	hexadecimal	binary
96	60	0110 0000
97	61	0110 0001
98	62	0110 0010
99	63	0110 0011
100	64	0110 0100
101	65	0110 0101
102	66	0110 0110
103	67	0110 0111
104	68	0110 1000
105	69	0110 1001
106	6A	0110 1010
107	6B	0110 1011
108	6C	0110 1100
109	6D	0110 1101
110	6E	0110 1110
111	6F	0110 1111
112	70	0111 0000
113	71	0111 0001
114	72	0111 0010
115	73	0111 0011
116	74	0111 0100
117	75	0111 0101
118	76	0111 0110
119	77	0111 0111
120	78	0111 1000
121	79	0111 1001
122	7A	0111 1010
123	7B	0111 1011
124	7C	0111 1100
125	7D	0111 1101
126	7E	0111 1110
127	7F	0111 1111

- Except the table above, for example 144-159(decimal)/9nH/1001 0000-1001 1111(binary) denotes the Note On Message for each channel (1-16). 176-191/BnH/1011 0000-1011 1111 denotes the Control Change Message for each channel (1-16). 192-207/CnH/1100 0000-1100 1111 denotes the Program Change Message for each channel (1-16). 240/FOH/1111 0000 denotes the start of a System Exclusive Message. 247/F7H/1111 0111 denotes the end of a System Exclusive Message.
- aaH (hexidecimal)/0aaaaaaa (binary) denotes the data address. The address contains High, Mid, and Low.
- bbH/0bbbbbbb denotes the byte count.
- ccH/0ccccccc denotes the check sum.
- ddH/0ddddddd denotes the data/value.

MIDI CHANNEL MESSAGE (1)

○: available

MIDI Events	Status byte		1st Data byte			2nd Data byte			MIDI Reception (respond/ignore)			MIDI Transmission (generated data)			PLAY		REC
	Status		Data	(HEX)	Parameter	Data	(HEX)	Parameter	Song	Main Layer Left Left-Layer	Keyboard	Panel (main generation method)	Song	Midi	PLAY	REW	Recorded from panel
Key Off	8nH	(n:Channel Number)	kk		Key no. (0–127)	vv		Velocity(0–127)	○	○	○	×	○	×	○	×	×
Key On	9nH	(n:Channel Number)	kk		Key no. (0–127)	vv		Key On :vv=1–127 Key Off :vv=0	○	○	○	○ (Keyboard)	○	×	○	×	○
Control Change	BnH		0	(00H)	Bank Select MSB	0 64 126 127	(00H) (40H) (7EH) (7FH)	Normal SFX voice SFX kit Drum kit	○	○	×	○ (Voice)	○	×	○	○	○
			1	(01H)	Modulation	0–127	(00H...7FH)	Data	○	○	○ (All manually played parts)	×	○	×	○	○	×
			5	(05H)	Portamento Time	0–127	(00H...7FH)	Data	○	○	○ (All manually played parts)	×	○	×	○	○	×
			6	(06H)	Data Entry MSB	0–127	(00H...7FH)	Data	○	○	○ (All manually played parts)	○ (Voice Setting)	○	×	○	○	○
			7	(07H)	Main Volume	0–127	(00H...7FH)	Data	○	○	○ (All manually played parts)	○ (Voice Setting)	○	×	○	○	○
			10	(0AH)	Panpot	0–127	(00H...7FH)	L64	○	○	○ (All manually played parts)	○ (Voice Setting)	○	×	○	○	○
			11	(0BH)	Expression	0–127	(00H...7FH)	Data	○	○	○ (All manually played parts)	○ (Pedal)	○	×	○	○	○
			32	(20H)	Bank Select LSB	0–127	(00H...7FH)	Data	○	○	×	○ (Voice)	○	×	○	○	○
			38	(26H)	Data Entry LSB	0–127	(00H...7FH)	Data	○	○	○ (All manually played parts)	○ (Voice Setting)	○	×	○	×	○
			64	(40H)	Sustain(Damper)	0–127	(00H...7FH)	Data	○	○	○ (All manually played parts)	○ (Pedal)	○	×	○	○	○
			65	(41H)	Portamento	0–127	(00H...7FH)	0...63, 64...127 (OFF, ON)	○	○	○ (All manually played parts)	×	○	×	○	○	×
			66	(42H)	Sostenuto	0–127	(00H...7FH)	0...63, 64...127 (OFF, ON)	○	○	○ (All manually played parts)	○ (Pedal)	○	×	○	○	○
			67	(43H)	Soft Pedal	0–127	(00H...7FH)	0...63, 64...127 (OFF, ON)	○	○	○ (All manually played parts)	○ (Pedal)	○	×	○	○	○
			71	(47H)	Harmonic Content	0–127	(00H...7FH)	-64...0...+63	○	○	○ (All manually played parts)	○ (Voice Setting)	○	×	○	○	○
			72	(48H)	Release Time	0–127	(00H...7FH)	-64...0...+63	○	○	○ (All manually played parts)	×	○	×	○	○	×
			73	(49H)	Attack Time	0–127	(00H...7FH)	-64...0...+63	○	○	○ (All manually played parts)	×	○	×	○	○	×
			74	(4AH)	Brightness	0–127	(00H...7FH)	-64...0...+63	○	○	○ (All manually played parts)	○ (Voice Setting)	○	×	○	○	○
			84	(54H)	Portamento Control	0–127	(00H...7FH)	Key no. (0–127)	○	○	×	×	○	×	○	×	×
			91	(5BH)	Effect1 Depth (Reverb Send Level)	0–127	(00H...7FH)	Data	○	○	○ (All manually played parts)	○ (Voice Setting)	○	×	○	○	○
			93	(5DH)	Effect3 Depth (Chorus Send Level)	0–127	(00H...7FH)	Data	○	○	○ (All manually played parts)	○ (Voice Setting)	○	×	○	○	○
			94	(5EH)	Effect4 Depth (Variation Send Level)	0–127	(00H...7FH)	Data	○	○	○ (All manually played parts)	×	○	×	○	○	×
			96	(60H)	RPN Increment	–	–	*	○	○	×	×	○	×	○	×	×
			97	(61H)	RPN Decrement	–	–	*	○	○	×	×	○	×	○	×	×
			98	(62H)	NRPN LSB	0–127	(00H...7FH)	Data	○	○	×	×	○	×	○	○	×
			99	(63H)	NRPN MSB	0–127	(00H...7FH)	Data	○	○	×	×	○	×	○	○	×
			100	(64H)	RPN LSB	0–127	(00H...7FH)	Data	○	○	○ (All manually played parts)	○ (Voice Setting)	○	×	○	○	○
			101	(65H)	RPN MSB	0–127	(00H...7FH)	Data	○	○	○ (All manually played parts)	○ (Voice Setting)	○	×	○	○	○
Mode Message	BnH	(n:Channel Number)	120	(78H)	All Sound Off	0	(00H)	Data	○	○	○ (All manually played parts)	×	○	×	○	×	×
			121	(79H)	Reset All Controllers	0	(00H)	Data	○	×	×	×	○	×	○	×	×
			123	(7BH)	All Note Off	0	(00H)	Data	○	○	○ (All manually played parts)	×	○	×	○	×	×
			124	(7CH)	Omni Off	0	(00H)	Data	○	×	×	×	×	×	×	×	×
			125	(7DH)	Omni On	0	(00H)	Data	○	×	×	×	×	×	×	×	×
			126	(7EH)	Mono	0–16	(00H...10H)	Data	○	×	×	×	○	×	○	×	×
			127	(7FH)	Poly	0	(00H)	Data	○	×	×	×	○	×	○	×	×
Program Change	CnH	(n:Channel Number)	pp	(00H...7FH)	Voice number (0–127)	–	–	–	○	○	×	○ (Voice)	○	×	○	○	○
Channel After Touch	DnH	(n:Channel Number)	vv	(00H...7FH)	Data	–	–	–	○	○	○ (All manually played parts)	×	○	×	○	×	×
Polyphonic After Touch	AnH	(n:Channel Number)	kk	(00H...7FH)	Key no. (0–127)	vv	(00H...7FH)	Data	○	×	×	×	○	×	○	×	×
Pitch Bend Change	EnH	(n:Channel Number)	cc	(00H...7FH)	LSB	dd	(00H...7FH)	MSB	○	○	○ (All manually played parts)	○ (Pedal)	○	×	○	○	○
Realtime Message	F8H	MIDI Clock	–		–	–		–	×			○			—	—	×
	FAH	Start	–		–	–		–	○			○			—	—	×
	FBH	Continue	–		–	–		–	×			×			—	—	×
	FCH	Stop	–		–	–		–	○			○			—	—	×
	FEH	Active Sens	–		–	–		–	○			○			—	—	×
	FFH	System Reset	–		–	–		–	×			×			—	—	×

* The data byte is ignored.

MIDI CHANNEL MESSAGE (2)

Parameters controlled by NRPN (Non-Registered Parameter Numbers)

NRPN		Data Entry		Parameter	Data Range	MIDI Reception (respond/ignore)			MIDI Transmission (generated data)			PLAY		REC
MSB	LSB	MSB	LSB			Song	Main Layer Left Left-Layer	Keyboard	Panel (main generation method)	Song	Midi	PLAY	REW	Recorded from panel
01H	08H	mmH	--	Vibrato Rate	mm : 00H-40H-7FH (-64...0...+63)	○	○	×	×	○	×	○	○	×
01H	09H	mmH	--	Vibrato Depth	mm : 00H-40H-7FH (-64...0...+63)	○	○	×	×	○	×	○	○	×
01H	0AH	mmH	--	Vibrato Delay	mm : 00H-40H-7FH (-64...0...+63)	○	○	×	×	○	×	○	○	×
01H	20H	mmH	--	Low Pass Filter Cutoff Frequency	mm : 00H-40H-7FH (-64...0...+63)	○	×	×	×	○	×	○	○	×
01H	21H	mmH	--	Low Pass Filter Resonance	mm : 00H-40H-7FH (-64...0...+63)	○	×	×	×	○	×	○	○	×
01H	30H	mmH	--	EQ BASS	mm : 00H-40H-7FH (-64...0...+63)	○	×	×	×	○	×	○	○	×
01H	31H	mmH	--	EQ TREBLE	mm : 00H-40H-7FH (-64...0...+63)	○	×	×	×	○	×	○	○	×
01H	34H	mmH	--	EQ BASS Frequency	mm : 04H-28H (32...2.0k [Hz])	○	×	×	×	○	×	○	○	×
01H	35H	mmH	--	EQ TREBLE Frequency	mm : 1CH-3AH (500...16.0k [Hz])	○	×	×	×	○	×	○	○	×
01H	63H	mmH	--	EG Attack Time	mm : 00H-40H-7FH (-64...0...+63)	○	×	×	×	○	×	○	○	×
01H	64H	mmH	--	EG Decay Time	mm : 00H-40H-7FH (-64...0...+63)	○	○	×	×	○	×	○	○	×
01H	66H	mmH	--	EG Release	mm : 00H-40H-7FH (-64...0...+63)	○	×	×	×	○	×	○	○	×
14H	rrH	mmH	--	Drum Low Pass Filter Cutoff Frequency	rr : drum instrument note number mm : 00H-40H-7FH (-64...0...+63)	○	×	×	×	○	×	○	×	×
15H	rrH	mmH	--	Drum Low Pass Filter Resonance	rr : drum instrument note number mm : 00H-40H-7FH (-64...0...+63)	○	×	×	×	○	×	○	×	×
16H	rrH	mmH	--	Drum EG Attack Rate	rr : drum instrument note number mm : 00H-40H-7FH (-64...0...+63)	○	×	×	×	○	×	○	×	×
17H	rrH	mmH	--	Drum EG Decay Rate	rr : drum instrument note number mm : 00H-40H-7FH (-64...0...+63)	○	×	×	×	○	×	○	×	×
18H	rrH	mmH	--	Drum Pitch Coarse	rr : drum instrument note number mm : 00H-40H-7FH (-64...0...+63)	○	×	×	×	○	×	○	×	×
19H	rrH	mmH	--	Drum Pitch Fine	rr : drum instrument note number mm : 00H-40H-7FH (-64...0...+63)	○	×	×	×	○	×	○	×	×
1AH	rrH	mmH	--	Drum Level	rr : drum instrument note number mm : 00H-7FH (0...127)	○	×	×	×	○	×	○	×	×
1CH	rrH	mmH	--	Drum Pan	rr : drum instrument note number mm : 00H, 01H-40H-7FH (RND, L63...C...R63)	○	×	×	×	○	×	○	×	×
1DH	rrH	mmH	--	Drum Reverb Send Level	rr : drum instrument note number mm : 00H-7FH (0...127)	○	×	×	×	○	×	○	×	×
1EH	rrH	mmH	--	Drum Chorus Send Level	rr : drum instrument note number mm : 00H-7FH (0...127)	○	×	×	×	○	×	○	×	×
1FH	rrH	mmH	--	Drum Variation Send Level	rr : drum instrument note number mm : 00H-7FH (0...127) (Variation Connection = SYSTEM) mm : 00H, 01H-7FH (OFF, ON) (Variation Connection = INSERTION)	○	×	×	×	○	×	○	×	×

NRPN MSB: 14H-1FH (for drums) message is accepted as long as the channel is set with a drum voice.
Data Entry LSB: Ignored.

Parameters controlled by RPN (Registered Parameter Numbers)

NRPN		Data Entry		Parameter	Data Range	MIDI Reception (respond/ignore)			MIDI Transmission (generated data)			PLAY		REC
MSB	LSB	MSB	LSB			Song	Main Layer Left Left-Layer	Keyboard	Panel (main generation method)	Song	Midi	PLAY	REW	Recorded from panel
00H	00H	mmH	--	Pitch Bend Sensitivity	mm : 00H-18H (0...+24 [semitones])	○	○	○ (All manually played parts)	○ (Other Setting)	○	×	○	○	○
00H	01H	mmH	llH	Fine Tune	mm ll : 00H 00H -100 [cent] ... mm ll : 40H 00H 0 [cent] ... mm ll : 7FH 7FH 100 [cent]	○	○	○ (All manually played parts)	○ (Voice Setting)	○	×	○	○	○
00H	02H	mmH	--	Coarse Tune	mm : 28H-40H-58H (-24...0...+24 [semitones])	○	○	○ (All manually played parts)	×	○	×	○	○	×
7FH	7FH	--	--	Null	–	○	○	○ (All manually played parts)	×	○	×	○	×	×

MIDI PARAMETER CHANGE TABLE

* Not Received when Receive Parameter SysEx is set to off.
* Not transmitted when Transmit Parameter SysEx is set to on.

MIDI Parameter Change table (XG SYSTEM) ○: available

Address (H)			Size (H)	Data (H)	Parameter	Description	XG Default (H)	MIDI Reception (effective or not for each part)			MIDI Transmission (generated data)			PLAY		REC
								Song	Main Layer Left Left-Layer	Keyboard	Panel (main generation method)	Song	Midi	PLAY	REW	Recorded from panel
00	00	00 01 02 03	4	00-0F 00-0F 00-0F 00-0F	MASTER TUNE	-102.4...0...+102.3 [cent] 1st bit3-0 → bit15-12 2nd bit3-0 → bit11-8 3rd bit3-0 → bit7-4 4th bit3-0 → bit3-0	* Panel setting value	○			×	○	×	○	×	×
		04	1	00-7F	MASTER VOLUME	0...127	7F	○	×	×	×	○	×	○	○	×
		05	1	00-7F	MASTER ATTENUATOR	0...127	00	×	×	×	×	×	×	×	×	×
		06	1	28-58	TRANSPOSE	-24...0...+24 [semitones]	40	○	×	×	×	○	×	○	○	×
		7D	1	N	DRUM SETUP RESET	N:Drum setup number	–	○	×	×	×	○	×	○	×	×
		7E	1	00	XG SYSTEM ON	00=XG system ON	–	○	×	×	×	○	×	○	×	○
		7F	1	00	ALL PARAMETER RESET	00=ON	–	○	×	×	×	○	×	○	×	×

TOTAL SIZE 07

MIDI Parameter Change table (SYSTEM INFORMATION)

Address (H)			Size (H)	Data (H)	Parameter	Description	MIDI Reception (effective or not for each part)			MIDI Transmission (generated data)			PLAY		REC
							Song	Main Layer Left Left-Layer	Keyboard	Panel (main generation method)	Song	Midi	PLAY	REW	Recorded from panel
01	00	00 ... 0D	E	20-7F ... 20-7F	Model Name 1 ... Model Name 14	32...127(ASCII CHARACTER) ... 32...127(ASCII CHARACTER)	–	–	–	×	×	○	×	×	×
		0E	1		NOT USED										
		0F	1		NOT USED										

TOTAL SIZE 10

Transmitted in response to Dump Request. Not received.

MIDI Parameter Change table (EFFECT1)

Address (H)			Size (H)	Data (H)	Parameter	Description	XG Default (H)	MIDI Reception (effective or not for each part)			MIDI Transmission (generated data)			PLAY		REC
								Song	Main Layer Left Left-Layer	Keyboard	Panel (main generation method)	Song	Midi	PLAY	REW	Recorded from panel
02	01	00	2	00-7F 00-7F	REVERB TYPE MSB REVERB TYPE LSB	Refer to Effect Parameter List "	01(=HALL1) 00	○			○(Voice Setting)	○	×	○	○	○
		02	1	00-7F	REVERB PARAMETER 1	"	Depends on Reverb Type	○ (* Depends on Reverb Type)			×	○	×	○	○	×
		03	1	00-7F	REVERB PARAMETER 2	"	Depends on Reverb Type	○ (* Depends on Reverb Type)			×	○	×	○	○	×
		04	1	00-7F	REVERB PARAMETER 3	"	Depends on Reverb Type	○ (* Depends on Reverb Type)			×	○	×	○	○	×
		05	1	00-7F	REVERB PARAMETER 4	"	Depends on Reverb Type	○ (* Depends on Reverb Type)			×	○	×	○	○	×
		06	1	00-7F	REVERB PARAMETER 5	"	Depends on Reverb Type	○ (* Depends on Reverb Type)			×	○	×	○	○	×
		07	1	00-7F	REVERB PARAMETER 6	"	Depends on Reverb Type	○ (* Depends on Reverb Type)			×	○	×	○	○	×
		08	1	00-7F	REVERB PARAMETER 7	"	Depends on Reverb Type	○ (* Depends on Reverb Type)			×	○	×	○	○	×
		09	1	00-7F	REVERB PARAMETER 8	"	Depends on Reverb Type	○ (* Depends on Reverb Type)			×	○	×	○	○	×
		0A	1	00-7F	REVERB PARAMETER 9	"	Depends on Reverb Type	○ (* Depends on Reverb Type)			×	○	×	○	○	×
		0B	1	00-7F	REVERB PARAMETER 10	"	Depends on Reverb Type	○ (* Depends on Reverb Type)			×	○	×	○	○	×
		0C	1	00-7F	REVERB RETURN	-∞dB...0dB...+6dB(0...96...127)	40	○			×	○	×	○	○	×
		0D	1	01-7F	REVERB PAN	L63...C...R63	40	○			×	○	×	○	○	×

TOTAL SIZE 0E

02	01	10	1	00-7F	REVERB PARAMETER 11	Refer to Effect Parameter List	Depends on Reverb Type	○ (* Depends on Reverb Type)			×	○	×	○	○	×
		11	1	00-7F	REVERB PARAMETER 12	"	Depends on Reverb Type	○ (* Depends on Reverb Type)			×	○	×	○	○	×
		12	1	00-7F	REVERB PARAMETER 13	"	Depends on Reverb Type	○ (* Depends on Reverb Type)			×	○	×	○	○	×
		13	1	00-7F	REVERB PARAMETER 14	"	Depends on Reverb Type	○ (* Depends on Reverb Type)			×	○	×	○	○	×
		14	1	00-7F	REVERB PARAMETER 15	"	Depends on Reverb Type	○ (* Depends on Reverb Type)			×	○	×	○	○	×
		15	1	00-7F	REVERB PARAMETER 16	"	Depends on Reverb Type	○ (* Depends on Reverb Type)			×	○	×	○	○	×

TOTAL SIZE 06

Address (H)			Size (H)	Data (H)	Parameter	Description	XG Default (H)	MIDI Reception (effective or not for each part)			MIDI Transmission (generated data)			PLAY		REC
								Song	Main Layer Left Left-Layer	Keyboard	Panel (main generation method)	Song	Midi	PLAY	REW	Recorded from panel
02	01	20	2	00-7F 00-7F	CHORUS TYPE MSB CHORUS TYPE LSB	Refer to Effect Parameter List "	41(=CHORUS1) 00	○			○ (Voice Setting)	○	×	○	○	○
		22	1	00-7F	CHORUS PARAMETER 1	"	Depends on Chorus Type	○ (* Depends on Chorus Type)			×	○	×	○	○	×
		23	1	00-7F	CHORUS PARAMETER 2	"	Depends on Chorus Type	○ (* Depends on Chorus Type)			×	○	×	○	○	×
		24	1	00-7F	CHORUS PARAMETER 3	"	Depends on Chorus Type	○ (* Depends on Chorus Type)			×	○	×	○	○	×
		25	1	00-7F	CHORUS PARAMETER 4	"	Depends on Chorus Type	○ (* Depends on Chorus Type)			×	○	×	○	○	×
		26	1	00-7F	CHORUS PARAMETER 5	"	Depends on Chorus Type	○ (* Depends on Chorus Type)			×	○	×	○	○	×
		27	1	00-7F	CHORUS PARAMETER 6	"	Depends on Chorus Type	○ (* Depends on Chorus Type)			×	○	×	○	○	×
		28	1	00-7F	CHORUS PARAMETER 7	"	Depends on Chorus Type	○ (* Depends on Chorus Type)			×	○	×	○	○	×
		29	1	00-7F	CHORUS PARAMETER 8	"	Depends on Chorus Type	○ (* Depends on Chorus Type)			×	○	×	○	○	×
		2A	1	00-7F	CHORUS PARAMETER 9	"	Depends on Chorus Type	○ (* Depends on Chorus Type)			×	○	×	○	○	×
		2B	1	00-7F	CHORUS PARAMETER 10	"	Depends on Chorus Type	○ (* Depends on Chorus Type)			×	○	×	○	○	×
		2C	1	00-7F	CHORUS RETURN	-∞dB...0dB...+6dB(0...96...127)	40	○			×	○	×	○	○	×
		2D	1	01-7F	CHORUS PAN	L63...C...R63	40	○			×	○	×	○	○	×
		2E	1	00-7F	SEND CHORUS TO REVERB	-∞dB...0dB...+6dB(0...96...127)	00	○			×	○	×	○	○	×

TOTAL SIZE 0F

02	01	30	1	00-7F	CHORUS PARAMETER 11	Refer to Effect Parameter List	Depends on Chorus Type	○ (* Depends on Chorus Type)			×	○	×	○	○	×
		31	1	00-7F	CHORUS PARAMETER 12	"	Depends on Chorus Type	○ (* Depends on Chorus Type)			×	○	×	○	○	×
		32	1	00-7F	CHORUS PARAMETER 13	"	Depends on Chorus Type	○(* Depends on Chorus Type)			×	○	×	○	○	×
		33	1	00-7F	CHORUS PARAMETER 14	"	Depends on Chorus Type	○ (* Depends on Chorus Type)			×	○	×	○	○	×
		34	1	00-7F	CHORUS PARAMETER 15	"	Depends on Chorus Type	○ (* Depends on Chorus Type)			×	○	×	○	○	×
		35	1	00-7F	CHORUS PARAMETER 16	"	Depends on Chorus Type	○ (* Depends on Chorus Type)			×	○	×	○	○	×

TOTAL SIZE 06

Address (H)			Size (H)	Data (H)	Parameter	Description	XG Default (H)	MIDI Reception (effective or not for each part)			MIDI Transmission (generated data)			PLAY		REC
								Song	Main Layer Left Left-Layer	Keyboard	Panel (main generation method)	Song	Midi	PLAY	REW	Recorded from panel
02	01	40	2	00-7F	VARIATION TYPE MSB	Refer to Effect Parameter List	05(=DELAY L,C,R)		○		×	○	×	○	○	×
				00-7F	VARIATION TYPE LSB	"	00									
		42	2	00-7F	VARIATION PARAMETER 1 MSB	"	Depends on Variation Type		○ (* Depends on Variation Type)		×	○	×	○	○	×
				00-7F	VARIATION PARAMETER 1 LSB	"										
		44	2	00-7F	VARIATION PARAMETER 2 MSB	"	Depends on Variation Type		○ (* Depends on Variation Type)		×	○	×	○	○	×
				00-7F	VARIATION PARAMETER 2 LSB	"										
		46	2	00-7F	VARIATION PARAMETER 3 MSB	"	Depends on Variation Type		○ (* Depends on Variation Type)		×	○	×	○	○	×
				00-7F	VARIATION PARAMETER 3 LSB	"										
		48	2	00-7F	VARIATION PARAMETER 4 MSB	"	Depends on Variation Type		○ (* Depends on Variation Type)		×	○	×	○	○	×
				00-7F	VARIATION PARAMETER 4 LSB	"										
		4A	2	00-7F	VARIATION PARAMETER 5 MSB	"	Depends on Variation Type		○ (* Depends on Variation Type)		×	○	×	○	○	×
				00-7F	VARIATION PARAMETER 5 LSB	"										
		4C	2	00-7F	VARIATION PARAMETER 6 MSB	"	Depends on Variation Type		○ (* Depends on Variation Type)		×	○	×	○	○	×
				00-7F	VARIATION PARAMETER 6 LSB	"										
		4E	2	00-7F	VARIATION PARAMETER 7 MSB	"	Depends on Variation Type		○ (* Depends on Variation Type)		×	○	×	○	○	×
				00-7F	VARIATION PARAMETER 7 LSB	"										
		50	2	00-7F	VARIATION PARAMETER 8 MSB	"	Depends on Variation Type		○ (* Depends on Variation Type)		×	○	×	○	○	×
				00-7F	VARIATION PARAMETER 8 LSB	"										
		52	2	00-7F	VARIATION PARAMETER 9 MSB	"	Depends on Variation Type		○ (* Depends on Variation Type)		×	○	×	○	○	×
				00-7F	VARIATION PARAMETER 9 LSB	"										
		54	2	00-7F	VARIATION PARAMETER 10 MSB	"	Depends on Variation Type		○ (* Depends on Variation Type)		×	○	×	○	○	×
				00-7F	VARIATION PARAMETER 10 LSB	"										
		56	1	00-7F	VARIATION RETURN	-∞dB...0dB...+6dB(0...96...127)	40		○		×	○	×	○	○	×
		57	1	01-7F	VARIATION PAN	L63...C...R63	40		○		×	○	×	○	○	×
		58	1	00-7F	SEND VARIATION TO REVERB	-∞dB...0dB...+6dB(0...96...127)	00		○		×	○	×	○	○	×
		59	1	00-7F	SEND VARIATION TO CHORUS	-∞dB...0dB...+6dB(0...96...127)	00		○		×	○	×	○	○	×
		5A	1	00-01	VARIATION CONNECTION	INSERTION, SYSTEM	00		○		×	○	×	○	○	×
		5B	1	00-7F	VARIATION PART NUMBER	Reception: Part1...16(0...15) Transmission: Part1...16(0...15) AD(64) OFF(127)	7F		○		×	○	×	○	○	×
		5C	1	00-7F	MW VARIATION CONTROL DEPTH	-64...0...+63	40		○		×	○	×	○	○	×
		5D	1	00-7F	BEND VARIATION CONTROL DEPTH	-64...0...+63	40		○		×	○	×	○	○	×
		5E	1	00-7F	CAT VARIATION CONTROL DEPTH	-64...0...+63	40		○		×	○	×	○	○	×
		5F	1	00-7F	AC1 VARIATION CONTROL DEPTH	-64...0...+63	40		○		×	○	×	○	○	×
		60	1	00-7F	AC2 VARIATION CONTROL DEPTH	-64...0...+63	40		○		×	○	×	○	○	×

TOTAL SIZE 21

02	01	70	1	00-7F	VARIATION PARAMETER 11	Refer to Effect Parameter List	Depends on Variation Type		○ (* Depends on Variation Type)		×	○	×	○	○	×
		71	1	00-7F	VARIATION PARAMETER 12	"	Depends on Variation Type		○ (* Depends on Variation Type)		×	○	×	○	○	×
		72	1	00-7F	VARIATION PARAMETER 13	"	Depends on Variation Type		○ (* Depends on Variation Type)		×	○	×	○	○	×
		73	1	00-7F	VARIATION PARAMETER 14	"	Depends on Variation Type		○ (* Depends on Variation Type)		×	○	×	○	○	×
		74	1	00-7F	VARIATION PARAMETER 15	"	Depends on Variation Type		○ (* Depends on Variation Type)		×	○	×	○	○	×
		75	1	00-7F	VARIATION PARAMETER 16	"	Depends on Variation Type		○ (* Depends on Variation Type)		×	○	×	○	○	×

TOTAL SIZE 06

MIDI Parameter Change table (EFFECT2)

Address (H)			Size (H)	Data (H)	Parameter	Description	MIDI Reception (effective or not for each part)			MIDI Transmission (generated data)			PLAY		REC
							Song	Main Layer Left Left-Layer	Keyboard	Panel (main generation method)	Song	Midi	PLAY	REW	Recorded from panel
03	n	00	2	00-7F	INSERTION EFFECT TYPE MSB	Refer to Effect Parameter List		○		○ (Voice Setting)	○	×	○	○	○
				00-7F	INSERTION EFFECT TYPE LSB	"									
		02	1	00-7F	INSERTION EFFECT PARAMETER 1	"	○ (* Depends on Insertion Type)			○ (Voice Setting)	○	×	○	○	○
		03	1	00-7F	INSERTION EFFECT PARAMETER 2	"	○ (* Depends on Insertion Type)			×	○	×	○	○	×
		04	1	00-7F	INSERTION EFFECT PARAMETER 3	"	○ (* Depends on Insertion Type)			○ (Voice Setting)	○	×	○	○	○
		05	1	00-7F	INSERTION EFFECT PARAMETER 4	"	○ (* Depends on Insertion Type)			×	○	×	○	○	×
		06	1	00-7F	INSERTION EFFECT PARAMETER 5	"	○ (* Depends on Insertion Type)			×	○	×	○	○	×
		07	1	00-7F	INSERTION EFFECT PARAMETER 6	"	○ (* Depends on Insertion Type)			×	○	×	○	○	×
		08	1	00-7F	INSERTION EFFECT PARAMETER 7	"	○ (* Depends on Insertion Type)			×	○	×	○	○	×
		09	1	00-7F	INSERTION EFFECT PARAMETER 8	"	○ (* Depends on Insertion Type)			×	○	×	○	○	×
		0A	1	00-7F	INSERTION EFFECT PARAMETER 9	"	○ (* Depends on Insertion Type)			×	○	×	○	○	×
		0B	1	00-7F	INSERTION EFFECT PARAMETER 10	"	○ (* Depends on Insertion Type)			○ (Voice Setting)	○	×	○	○	○
		0C	1	00-7F	INSERTION EFFECT PART NUMBER	Reception: Part1...16(0...15) Transmission: Part1...16(0...15) AD(64) OFF(127)		○		○ (Voice)	○	×	○	○	○
		0D	1	00-7F	MW INSERTION CONTROL DEPTH	-64...0...+63		○		×	○	×	○	○	×
		0E	1	00-7F	BEND INSERTION CONTROL DEPTH	-64...0...+63		○		×	○	×	○	○	×
		0F	1	00-7F	CAT INSERTION CONTROL DEPTH	-64...0...+63		○		×	○	×	○	○	×
		10	1	00-7F	AC1 INSERTION CONTROL DEPTH	-64...0...+63		○		×	○	×	○	○	×
		11	1	00-7F	AC2 INSERTION CONTROL DEPTH	-64...0...+63		○		×	○	×	○	○	×
TOTAL SIZE			12												
		20	1	00-7F	INSERTION EFFECT PARAMETER 11	Refer to Effect Parameter List	○ (* Depends on Insertion Type)			×	○	×	○	○	×
		21	1	00-7F	INSERTION EFFECT PARAMETER 12	"	○ (* Depends on Insertion Type)			×	○	×	○	○	×
		22	1	00-7F	INSERTION EFFECT PARAMETER 13	"	○ (* Depends on Insertion Type)			×	○	×	○	○	×
		23	1	00-7F	INSERTION EFFECT PARAMETER 14	"	○ (* Depends on Insertion Type)			×	○	×	○	○	×
		24	1	00-7F	INSERTION EFFECT PARAMETER 15	"	○ (* Depends on Insertion Type)			×	○	×	○	○	×
		25	1	00-7F	INSERTION EFFECT PARAMETER 16	"	○ (* Depends on Insertion Type)			○ (Voice Setting)	○	×	○	○	○
TOTAL SIZE			6												
		30	2	00-7F	INSERTION EFFECT PARAMETER 1 MSB	Refer to Effect Parameter List	○ (* Depends on Insertion Type)			×	○	×	○	○	×
				00-7F	INSERTION EFFECT PARAMETER 1 LSB	"									
		32	2	00-7F	INSERTION EFFECT PARAMETER 2 MSB	"	○ (* Depends on Insertion Type)			×	○	×	○	○	×
				00-7F	INSERTION EFFECT PARAMETER 2 LSB	"									
		34	2	00-7F	INSERTION EFFECT PARAMETER 3 MSB	"	○ (* Depends on Insertion Type)			×	○	×	○	○	×
				00-7F	INSERTION EFFECT PARAMETER 3 LSB	"									
		36	2	00-7F	INSERTION EFFECT PARAMETER 4 MSB	"	○ (* Depends on Insertion Type)			×	○	×	○	○	×
				00-7F	INSERTION EFFECT PARAMETER 4 LSB	"									
		38	2	00-7F	INSERTION EFFECT PARAMETER 5 MSB	"	○ (* Depends on Insertion Type)			×	○	×	○	○	×
				00-7F	INSERTION EFFECT PARAMETER 5 LSB	"									
		3A	2	00-7F	INSERTION EFFECT PARAMETER 6 MSB	"	○ (* Depends on Insertion Type)			×	○	×	○	○	×
				00-7F	INSERTION EFFECT PARAMETER 6 LSB	"									
		3C	2	00-7F	INSERTION EFFECT PARAMETER 7 MSB	"	○ (* Depends on Insertion Type)			×	○	×	○	○	×
				00-7F	INSERTION EFFECT PARAMETER 7 LSB	"									
		3E	2	00-7F	INSERTION EFFECT PARAMETER 8 MSB	"	○ (* Depends on Insertion Type)			×	○	×	○	○	×
				00-7F	INSERTION EFFECT PARAMETER 8 LSB	"									
		40	2	00-7F	INSERTION EFFECT PARAMETER 9 MSB	"	○ (* Depends on Insertion Type)			×	○	×	○	○	×
				00-7F	INSERTION EFFECT PARAMETER 9 LSB	"									
		42	2	00-7F	INSERTION EFFECT PARAMETER 10 MSB	"	○(* Depends on Insertion Type)			○(Voice Setting)	○	×	○	○	○
				00-7F	INSERTION EFFECT PARAMETER 10 LSB	"									
TOTAL SIZE			14												

The EFFECT2 Parameter cannot be reset to its factory setting with XG SYSTEM ON.

The second byte of the address is considered as an Insertion effect number.
n : insertion effect number

For effect types that do not require MSB, the Parameters for Address 02-0B will be received and the Parameters for Address 30-42 will not be received.
For effect types that require MSB, the Parameters for Address 30-42 will be received and the Parameters for Address 02-0B will not be received.
When Bulk Dumps that include Effect Type data are transmitted, the Parameters for Address 02-0B will always be transmitted. But, effects that require MSB, when the bulk dump is received the Parameters for Address 02-0B will not be received.

MIDI Parameter Change table (MULTI PART)

Address (H)			Size (H)	Data (H)	Parameter	Description	XG Default (H)	MIDI Reception (effective or not for each part)			MIDI Transmission (generated data)			PLAY		REC
								Song	Main Layer Left Left-Layer	Keyboard	Panel (main generation method)	Song	Midi	PLAY	REW	Recorded from panel
08	nn	00	1	00-20	NOT USED			×	×	×	×	×	×	×	×	×
		01	1	00-7F	BANK SELECT MSB	0...127	part10=7F, other parts=00	○	○	×	×	○	×	○	○	×
		02	1	00-7F	BANK SELECT LSB	0...127	00	○	○	×	×	○	×	○	○	×
		03	1	00-7F	PROGRAM NUMBER	1...128	00	○	○	×	×	○	×	○	○	×
		04	1	00-0F,7F	Rcv CHANNEL	1...16,OFF	Part No.	○	×	×	×	○	×	○	×	×
		05	1	00-01	MONO/POLY MODE	MONO, POLY	01	○	×	×	×	○	×	○	×	×
		06	1	00-02	SAME NOTE NUMBER KEY ON ASSIGN	SINGLE, MULTI, INST(for Drum)	01	○	×	×	×	○	×	○	×	×
		07	1	00-03	PART MODE	NORMAL, DRUM, DRUMS1...2	part10=02, other parts=00	○	×	×	○ (Drum Voice)	○	×	○	×	○
		08	1	28-58	NOTE SHIFT	-24...0...+24 [semitones]	40	○	○	×	×	○	×	○	○	×
		09 0A	2	00-0F 00-0F	DETUNE	-12.8...0...+12.7 [Hz] 1st bit3-0 → bit7-4 2nd bit3-0 → bit3-0	08 00	○	○	×	×	○	×	○	×	×
		0B	1	00-7F	VOLUME	0...127	64	○	○	×	×	○	×	○	○	×
		0C	1	00-7F	VELOCITY SENSE DEPTH	0...127	40	○	○	×	○(Voice Setting)	○	×	○	○	○
		0D	1	00-7F	VELOCITY SENSE OFFSET	0...127	40	○	○	×	○(Voice Setting)	○	×	○	○	○
		0E	1	00-7F	PAN	RND,L63...C...R63	40	○	○	×	×	○	×	○	○	×
		0F	1	00-7F	NOTE LIMIT LOW	C-2...G8	00	○	○	×	×	○	×	○	×	×
		10	1	00-7F	NOTE LIMIT HIGH	C-2...G8	7F	○	○	×	×	○	×	○	×	×
		11	1	00-7F	DRY LEVEL	0...127	7F	○	○	×	×	○	×	○	○	×
		12	1	00-7F	CHORUS SEND	0...127	00	○	○	×	×	○	×	○	○	×
		13	1	00-7F	REVERB SEND	0...127	28	○	○	×	×	○	×	○	○	×
		14	1	00-7F	VARIATION SEND	0...127	00	○	○	×	×	○	×	○	○	×
		15	1	00-7F	VIBRATO RATE	-64...0...+63	40	○	○	×	×	○	×	○	○	×
		16	1	00-7F	VIBRATO DEPTH	-64...0...+63	40	○	○	×	×	○	×	○	○	×
		17	1	00-7F	VIBRATO DELAY	-64...0...+63	40	○	○	×	×	○	×	○	○	×
		18	1	00-7F	FILTER CUTOFF FREQUENCY	-64...0...+63	40	○	○	×	×	○	×	○	○	×
		19	1	00-7F	FILTER RESONANCE	-64...0...+63	40	○	○	×	×	○	×	○	○	×
		1A	1	00-7F	EG ATTACK TIME	-64...0...+63	40	○	○	×	×	○	×	○	○	×
		1B	1	00-7F	EG DECAY TIME	-64...0...+63	40	○	○	×	×	○	×	○	○	×
		1C	1	00-7F	EG RELEASE TIME	-64...0...+63	40	○	○	×	×	○	×	○	○	×
		1D	1	28-58	MW PITCH CONTROL	-24...0...+24 [semitones]	40	○	○	×	×	○	×	○	×	×
		1E	1	00-7F	MW LOW PASS FILTER CONTROL	-9600...0...+9450 [cent]	40	○	○	×	×	○	×	○	×	×
		1F	1	00-7F	MW AMPLITUDE CONTROL	-100...0...+100 [%]	40	○	○	×	×	○	×	○	×	×
		20	1	00-7F	MW LFO PMOD DEPTH	0...127	0A	○	○	×	×	○	×	○	×	×
		21	1	00-7F	MW LFO FMOD DEPTH	0...127	00	○	○	×	×	○	×	○	×	×
		22	1	00-7F	MW LFO AMOD DEPTH	0...127	00	○	○	×	×	○	×	○	×	×
		23	1	28-58	BEND PITCH CONTROL	-24...0...+24 [semitones]	42	○	○	×	×	○	×	○	×	×
		24	1	00-7F	BEND LOW PASS FILTER CONTROL	-9600...0...+9450 [cent]	40	○	○	×	×	○	×	○	×	×
		25	1	00-7F	BEND AMPLITUDE CONTROL	-100...0...+100 [%]	40	○	○	×	×	○	×	○	×	×
		26	1	00-7F	BEND LFO PMOD DEPTH	0...127	00	○	○	×	×	○	×	○	×	×
		27	1	00-7F	BEND LFO FMOD DEPTH	0...127	00	○	○	×	×	○	×	○	×	×
		28	1	00-7F	BEND LFO AMOD DEPTH	0...127	00	○	○	×	×	○	×	○	×	×
TOTAL SIZE			29													
		30	1	00-01	Rcv PITCH BEND	OFF, ON	01	○	×	×	×	○	×	○	×	×
		31	1	00-01	Rcv CH AFTER TOUCH(CAT)	OFF, ON	01	○	×	×	×	○	×	○	×	×
		32	1	00-01	Rcv PROGRAM CHANGE	OFF, ON	01	○	×	×	×	○	×	○	×	×
		33	1	00-01	Rcv CONTROL CHANGE	OFF, ON	01	○	×	×	×	○	×	○	×	×
		34	1	00-01	Rcv POLY AFTER TOUCH(PAT)	OFF, ON	01	○	×	×	×	○	×	○	×	×
		35	1	00-01	Rcv NOTE MESSAGE	OFF, ON	01	○	×	×	×	○	×	○	×	×
		36	1	00-01	Rcv RPN	OFF, ON	01	○	×	×	×	○	×	○	×	×
		37	1	00-01	Rcv NRPN	OFF, ON	XGmode=01, GMmode=00	○	×	×	×	○	×	○	×	×
		38	1	00-01	Rcv MODULATION	OFF, ON	01	○	×	×	×	○	×	○	×	×
		39	1	00-01	Rcv VOLUME	OFF, ON	01	○	×	×	×	○	×	○	×	×
		3A	1	00-01	Rcv PAN	OFF, ON	01	○	×	×	×	○	×	○	×	×
		3B	1	00-01	Rcv EXPRESSION	OFF, ON	01	○	×	×	×	○	×	○	×	×
		3C	1	00-01	Rcv HOLD1	OFF, ON	01	○	×	×	×	○	×	○	×	×
		3D	1	00-01	Rcv PORTAMENTO	OFF, ON	01	○	×	×	×	○	×	○	×	×
		3E	1	00-01	Rcv SOSTENUTO	OFF, ON	01	○	×	×	×	○	×	○	×	×
		3F	1	00-01	Rcv SOFT PEDAL	OFF, ON	01	○	×	×	×	○	×	○	×	×
		40	1	00-01	Rcv BANK SELECT	OFF, ON	01	○	×	×	×	○	×	○	×	×
		41	1	00-7F	SCALE TUNING C	-63...0...+63 [cent]	40	○	○	×	○ (Other Setting)	○	×	○	×	○
		42	1	00-7F	SCALE TUNING C#	-63...0...+63 [cent]	40	○	○	×	○ (Other Setting)	○	×	○	×	○
		43	1	00-7F	SCALE TUNING D	-63...0...+63 [cent]	40	○	○	×	○ (Other Setting)	○	×	○	×	○
		44	1	00-7F	SCALE TUNING D#	-63...0...+63 [cent]	40	○	○	×	○ (Other Setting)	○	×	○	×	○
		45	1	00-7F	SCALE TUNING E	-63...0...+63 [cent]	40	○	○	×	○ (Other Setting)	○	×	○	×	○
		46	1	00-7F	SCALE TUNING F	-63...0...+63 [cent]	40	○	○	×	○ (Other Setting)	○	×	○	×	○
		47	1	00-7F	SCALE TUNING F#	-63...0...+63 [cent]	40	○	○	×	○ (Other Setting)	○	×	○	×	○
		48	1	00-7F	SCALE TUNING G	-63...0...+63 [cent]	40	○	○	×	○ (Other Setting)	○	×	○	×	○
		49	1	00-7F	SCALE TUNING G#	-63...0...+63 [cent]	40	○	○	×	○ (Other Setting)	○	×	○	×	○
		4A	1	00-7F	SCALE TUNING A	-63...0...+63 [cent]	40	○	○	×	○ (Other Setting)	○	×	○	×	○
		4B	1	00-7F	SCALE TUNING A#	-63...0...+63 [cent]	40	○	○	×	○ (Other Setting)	○	×	○	×	○
		4C	1	00-7F	SCALE TUNING B	-63...0...+63 [cent]	40	○	○	×	○ (Other Setting)	○	×	○	×	○
		4D	1	28-58	CAT PITCH CONTROL	-24...0...+24 [semitones]	40	○	○	×	×	○	×	○	×	×
		4E	1	00-7F	CAT LOW PASS FILTER CONTROL	-9600...0...+9450 [cent]	40	○	○	×	×	○	×	○	×	×
		4F	1	00-7F	CAT AMPLITUDE CONTROL	-100...0...+100 [%]	40	○	○	×	×	○	×	○	×	×
		50	1	00-7F	CAT LFO PMOD DEPTH	0...127	00	○	○	×	×	○	×	○	×	×
		51	1	00-7F	CAT LFO FMOD DEPTH	0...127	00	○	○	×	×	○	×	○	×	×
		52	1	00-7F	CAT LFO AMOD DEPTH	0...127	00	○	○	×	×	○	×	○	×	×
		53	1	28-58	PAT PITCH CONTROL	-24...0...+24 [semitones]	40	○	×	×	×	○	×	○	×	×
		54	1	00-7F	PAT LOW PASS FILTER CONTROL	-9600...0...+9450 [cent]	40	○	×	×	×	○	×	○	×	×

Address (H)			Size (H)	Data (H)	Parameter	Description	XG Default (H)	MIDI Reception (effective or not for each part)			MIDI Transmission (generated data)			PLAY		REC
								Song	Main Layer Left Left-Layer	Keyboard	Panel (main generation method)	Song	Midi	PLAY	REW	Recorded from panel
		55	1	00-7F	PAT AMPLITUDE CONTROL	-100...0...+100 [%]	40	○	×	×	×	○	×	○	×	×
		56	1	00-7F	PAT LFO PMOD DEPTH	0...127	00	○	×	×	×	○	×	○	×	×
		57	1	00-7F	PAT LFO FMOD DEPTH	0...127	00	○	×	×	×	○	×	○	×	×
		58	1	00-7F	PAT LFO AMOD DEPTH	0...127	00	○	×	×	×	○	×	○	×	×
		59	1	00-5F	AC1 CONTROLLER NUMBER	0...95	10	○	×	×	×	○	×	○	×	×
		5A	1	28-58	AC1 PITCH CONTROL	-24...0...+24 [semitones]	40	○	×	×	×	○	×	○	×	×
		5B	1	00-7F	AC1 LOW PASS FILTER CONTROL	-9600...0...+9450 [cent]	40	○	×	×	×	○	×	○	×	×
		5C	1	00-7F	AC1 AMPLITUDE CONTROL	-100...0...+100 [%]	40	○	×	×	×	○	×	○	×	×
		5D	1	00-7F	AC1 LFO PMOD DEPTH	0...127	00	○	×	×	×	○	×	○	×	×
		5E	1	00-7F	AC1 LFO FMOD DEPTH	0...127	00	○	×	×	×	○	×	○	×	×
		5F	1	00-7F	AC1 LFO AMOD DEPTH	0...127	00	○	×	×	×	○	×	○	×	×
		60	1	00-5F	AC2 CONTROLLER NUMBER	0...95	11	○	×	×	×	○	×	○	×	×
		61	1	28-58	AC2 PITCH CONTROL	-24...0...+24 [semitones]	40	○	×	×	×	○	×	○	×	×
		62	1	00-7F	AC2 LOW PASS FILTER CONTROL	-9600...0...+9450 [cent]	40	○	×	×	×	○	×	○	×	×
		63	1	00-7F	AC2 AMPLITUDE CONTROL	-100...0...+100 [%]	40	○	×	×	×	○	×	○	×	×
		64	1	00-7F	AC2 LFO PMOD DEPTH	0...127	00	○	×	×	×	○	×	○	×	×
		65	1	00-7F	AC2 LFO FMOD DEPTH	0...127	00	○	×	×	×	○	×	○	×	×
		66	1	00-7F	AC2 LFO AMOD DEPTH	0...127	00	○	×	×	×	○	×	○	×	×
		67	1	00-01	PORTAMENTO SWITCH	OFF, ON	00	○	○	×	×	○	×	○	○	×
		68	1	00-7F	PORTAMENTO TIME	0...127	00	○	○	×	×	○	×	○	○	×
		69	1	00-7F	PITCH EG INITIAL LEVEL	-64...0...+63	40	○	×	×	×	○	×	○	×	×
		6A	1	00-7F	PITCH EG ATTACK TIME	-64...0...+63	40	○	×	×	×	○	×	○	×	×
		6B	1	00-7F	PITCH EG RELEASE LEVEL	-64...0...+63	40	○	×	×	×	○	×	○	×	×
		6C	1	00-7F	PITCH EG RELEASE TIME	-64...0...+63	40	○	×	×	×	○	×	○	×	×
		6D	1	01-7F	VELOCITY LIMIT LOW	1...127	01	○	×	×	×	○	×	○	×	×
		6E	1	01-7F	VELOCITY LIMIT HIGH	1...127	7F	○	×	×	×	○	×	○	×	×
TOTAL SIZE			3F													
		70	1		NOT USED		–	–	–	–	–	–	–	–	–	–
		71	1		NOT USED		–	–	–	–	–	–	–	–	–	–
		72	1	00-7F	EQ BASS GAIN	-12dB...+12dB	40	○	○	×	○ (Voice Setting)	○	×	○	○	○
		73	1	00-7F	EQ TREBLE GAIN	-12dB...+12dB	40	○	○	×	○ (Voice Setting)	○	×	○	○	○
TOTAL SIZE			04													
		74	1		NOT USED		–	–	–	–	–	–	–	–	–	–
		75	1		NOT USED		–	–	–	–	–	–	–	–	–	–
		76	1	04-28	EQ BASS FREQUENCY	32...2.0k [Hz]	0C	○	○	×	○ (Voice Setting)	○	×	○	○	○
		77	1	1C-3A	EQ TREBLE FREQUENCY	500...16.0k [Hz]	36	○	○	×	○ (Voice Setting)	○	×	○	○	○
		78	1		NOT USED		–	–	–	–	–	–	–	–	–	–
		79	1		NOT USED		–	–	–	–	–	–	–	–	–	–
		7A	1		NOT USED		–	–	–	–	–	–	–	–	–	–
		7B	1		NOT USED		–	–	–	–	–	–	–	–	–	–
		7C	1		NOT USED		–	–	–	–	–	–	–	–	–	–
		7D	1		NOT USED		–	–	–	–	–	–	–	–	–	–
		7E	1		NOT USED		–	–	–	–	–	–	–	–	–	–
		7F	1		NOT USED		–	–	–	–	–	–	–	–	–	–
TOTAL SIZE			0C													

nn = PART NUMBER

If there is a Drum Voice assigned to the part, the following parameters are ineffective.

- BANK SELECT LSB
- MONO/POLY MODE
- SCALE TUNING
- PORTAMENTO
- PITCH EG
- FILTER MODULATION DEPTH (FMOD DEPTH)
- AMPLITUDE MODULATION DEPTH (AMOD DEPTH)

MIDI Parameter Change table (DRUM SETUP)

Address (H)			Size (H)	Data (H)	Parameter	Description	XG Default (H)	MIDI Reception (effective or not for each part)			MIDI Transmission (generated data)			PLAY		REC
								Song	Main Layer Left Left-Layer	Keyboard	Panel (main generation method)	Song	Midi	PLAY	REW	Recorded from panel
3n	rr	00	1	00-7F	PITCH COARSE	-64...0...+63	40	○	×	×	×	○	×	○	×	×
		01	1	00-7F	PITCH FINE	-64...0...+63 [cent]	40	○	×	×	×	○	×	○	×	×
		02	1	00-7F	LEVEL	0...127	Depends on the note	○	×	×	×	○	×	○	×	×
		03	1	00-7F	ALTERNATE GROUP	OFF, 1...127	Depends on the note	○	×	×	×	○	×	○	×	×
		04	1	00-7F	PAN	RND, L63...C...R63	Depends on the note	○	×	×	×	○	×	○	×	×
		05	1	00-7F	REVERB SEND	0...127	Depends on the note	○	×	×	×	○	×	○	×	×
		06	1	00-7F	CHORUS SEND	0...127	Depends on the note	○	×	×	×	○	×	○	×	×
		07	1	00-7F	VARIATION SEND	0...127	7F	○	×	×	×	○	×	○	×	×
		08	1	00-01	KEY ASSIGN	SINGLE, MULTI	00	○	×	×	×	○	×	○	×	×
		09	1	00-01	Rcv NOTE OFF	OFF, ON	Depends on the note	○	×	×	×	○	×	○	×	×
		0A	1	00-01	Rcv NOTE ON	OFF, ON	01	○	×	×	×	○	×	○	×	×
		0B	1	00-7F	LOW PASS FILTER CUTOFF FREQUENCY	-64...0...+63	40	○	×	×	×	○	×	○	×	×
		0C	1	00-7F	LOW PASS FILTER RESONANCE	-64...0...+63	40	○	×	×	×	○	×	○	×	×
		0D	1	00-7F	EG ATTACK RATE	-64...0...+63	40	○	×	×	×	○	×	○	×	×
		0E	1	00-7F	EG DECAY1 RATE	-64...0...+63	40	○	×	×	×	○	×	○	×	×
		0F	1	00-7F	EG DECAY2 RATE	-64...0...+63	40	○	×	×	×	○	×	○	×	×
TOTAL SIZE			10													
		20	1	00-7F	EQ BASS GAIN	-12...+12 [dB]	40	○	×	×	×	○	×	○	×	×
		21	1	00-7F	EQ TREBLE GAIN	-12...+12 [dB]	40	○	×	×	×	○	×	○	×	×
		22	1		NOT USED		–	–	–	–	–	–	–	–	–	–
		23	1		NOT USED		–	–	–	–	–	–	–	–	–	–
		24	1	04-28	EQ BASS FREQUENCY	32...2.0k [Hz]	0C	○	×	×	×	○	×	○	×	×
		25	1	1C-3A	EQ TREBLE FREQUENCY	500...16.0k [Hz]	36	○	×	×	×	○	×	○	×	×
		26	1		NOT USED		–	–	–	–	–	–	–	–	–	–
		27	1		NOT USED		–	–	–	–	–	–	–	–	–	–
		28	1		NOT USED		–	–	–	–	–	–	–	–	–	–
		29	1		NOT USED		–	–	–	–	–	–	–	–	–	–
		2A	1		NOT USED		–	–	–	–	–	–	–	–	–	–
		2B	1		NOT USED		–	–	–	–	–	–	–	–	–	–
		2C	1		NOT USED		–	–	–	–	–	–	–	–	–	–
		2D	1		NOT USED		–	–	–	–	–	–	–	–	–	–
TOTAL SIZE			0E													

n: Drum Setup Number (0-1)
rr: note number (0D-5B)
In the following cases, the Clavinova will initialize all Drum Setups.
XG SYSTEM ON received
GM SYSTEM ON received
DRUM SETUP RESET received (only when in XG mode)

- When a part to which a Drum Setup is assigned receives a program change, the assigned Drum Setup will be initialized.
  If the same Drum Setup is assigned to two or more parts, changes in Drum Setup parameters (including program changes) will apply to all parts to which it is assigned.

System Exclusive Messages (1)

* Not Received when Receive Parameter SysEx is set to off.
* Not transmitted when Transmit Parameter SysEx is set to on.

System Exclusive Messages (Universal Realtime messages)

○: available

MIDI Event	Data Format			MIDI Reception (effective or not for each part)			MIDI Reception (affecting the panel)	MIDI Transmission (generated data)			PLAY		REC
				Song	Main Layer Left Left-Layer	Keyboard		Panel (main generation method)	Song	Midi	PLAY	REW	Recorded from panel
Master Volume	F0 7F XN 04 01 SS TT F7			○	×	×	×	×	× (Output as XG Master Volume)	×	○	○	×
	11110000	F0	= Exclusive status										
	01111111	7F	= Universal Real Time										
	0xxxnnnn	XN	= When N is received N=0-F,whichever is received. X=ignored										
	00000100	04	= Sub-ID #1=Device Control Message										
	00000001	01	= Sub-ID #2=Master Volume										
	0sssssss	SS	= Volume LSB										
	0ttttttt	TT	= Volume MSB										
	11110111	F7	= End of Exclusive										

System Exclusive Messages (Universal Non Realtime messages)

MIDI Event	Data Format			MIDI Reception (effective or not for each part)			MIDI Reception (affecting the panel)	MIDI Transmission (generated data)			PLAY		REC
				Song	Main Layer Left Left-Layer	Keyboard		Panel (main generation method)	Song	Midi	PLAY	REW	Recorded from panel
GM1 System On	F0 7E XN 09 01 F7			○	×	×	○ (Voice Setting Reverb Type Chorus Type)	×	○	×	○	×	○
	11110000	F0	= Exclusive status										
	01111110	7E	= Universal Non-Real Time										
	0xxxnnnn	XN	= When N is received N=0-F,whichever is received. X=ignored										
	00001001	09	= Sub-ID #1=General MIDI Message										
	00000001	01	= Sub-ID #2=General MIDI On										
	11110111	F7	= End of Exclusive										

System Exclusive Messages (2)

* Not received when the Receive Parameter SysEx is set to off.
* Not transmitted when the Transmit Parameter SysEx is set to on.

System Exclusive Messages (Preset voice)

MIDI Event	Data Format			MIDI Reception (effective or not for each part)			MIDI Reception (affecting the panel)	MIDI Transmission (generated data)		
				Song	Main Layer Left Left-Layer	Keyboard		Panel (main generation method)	Song	Midi
String Resonance Depth	F0 43 73 01 50 11 0n 02 dd F7			○	○	×	○ (Other Setting)	○ (Other Setting)	○	×
	11110000	F0	= Exclusive status							
	01000011	43	= YAMAHA ID							
	01110011	73	= Clavinova ID							
	00000001	01	= Model ID (Clavinova common ID)							
	01010000	50	= SubID							
	00010001	11	= SubID							
	0000nnnn	0n	= Channel (00–0F)							
	00000010	02	= SubID(String Resonance Depth)							
	0ddddddd	dd	= Depth(00–48)							
	11110111	F7	= End of Exclusive							
Sustain Sample Depth	F0 43 73 01 50 11 0n 03 dd F7			○	○	×	○ (Other Setting)	○ (Other Setting)	○	×
	11110000	F0	= Exclusive status							
	01000011	43	= YAMAHA ID							
	01110011	73	= Clavinova ID							
	00000001	01	= Model ID (Clavinova common ID)							
	01010000	50	= SubID							
	00010001	11	= SubID							
	0000nnnn	0n	= Channel (00–0F)							
	00000011	03	= SubID(Sustain Sample Depth)							
	0ddddddd	dd	= Depth(00–48)							
	11110111	F7	= End of Exclusive							
Key Off Sampling Depth	F0 43 73 01 50 11 0n 04 dd F7			○	○	×	○ (Other Setting)	○ (Other Setting)	○	×
	11110000	F0	= Exclusive status							
	01000011	43	= YAMAHA ID							
	01110011	73	= Clavinova ID							
	00000001	01	= Model ID (Clavinova common ID)							
	01010000	50	= SubID							
	00010001	11	= SubID							
	0000nnnn	0n	= Channel (00–0F)							
	00000100	04	= SubID(Key Off Sampling Depth)							
	0ddddddd	dd	= Depth(00–50)							
	11110111	F7	= End of Exclusive							
Soft Pedal Depth	F0 43 73 01 50 11 0n 05 dd F7			○	○	×	○ (Other Setting)	○ (Other Setting)	○	×
	11110000	F0	= Exclusive status							
	01000011	43	= YAMAHA ID							
	01110011	73	= Clavinova ID							
	00000001	01	= Model ID (Clavinova common ID)							
	01010000	50	= SubID							
	00010001	11	= SubID							
	0000nnnn	0n	= Channel (00–0F)							
	00000101	05	= SubID(Soft Pedal Depth)							
	0ddddddd	dd	= Depth(00–7F)							
	11110111	F7	= End of Exclusive							

* For each Depth value, the reset value is 40H = voice parameter.

System Exclusive Messages (Others)

MIDI Event	Data Format			MIDI Reception (effective or not for each part)			MIDI Reception (affecting the panel)	MIDI Transmission (generated data)		
				Song	Main Layer Left Left-Layer	Keyboard		Panel (main generation method)	Song	Midi
MIDI Master Tuning	F0 43 1n 27 30 00 00 mm ll cc F7				○		○ (Other Setting)	×	○	×
	11110000	F0	= Exclusive status							
	01000011	43	= YAMAHA ID							
	0001nnnn	1n	n= always 0(when transmit), n=0-F(when receive)							
	00100111	27	= Model ID of TG100							
	00110000	30	= Address High							
	00000000	00	= Address Mid							
	00000000	00	= Address Low							
	0000mmmm	0m	= Master Tune MSB							
	00001lll	0l	= Master Tune LSB							
	0ccccccc	cc	= don't care							
	11110111	F7	= End of Exclusive							

Clavinova®

CLP-150/CLP-150M/ CLP-150C

PARTS LIST

■ CONTENTS

OVERALL ASSEMBLY **2**
MAIN UNIT **4**
TOP BOARD ASSEMBLY **9**
PANEL ASSEMBLY **10**
MUSIC REST ASSEMBLY **13**
ARM ASSEMBLY **14**
FRONT RAIL ASSEMBLY **15**
END BLOCK ASSEMBLY **16**
KEY COVER ASSEMBLY **17**
JACK ASSEMBLY **18**
HEADPHONES JACK ASSEMBLY **19**
DM ASSEMBLY **19**
MA120 ASSEMBLY **20**
FU120LB ASSEMBLY **21**
SIDE BOARD UNIT **22**
PEDAL BOX ASSEMBLY **24**
PEDAL ASSEMBLY **25**
KEYBOARD ASSEMBLY **26**
BENCH(BC-102DR/BC-102MH/BC-102CH) **28**
BENCH(BC-100DR/BC-100MH/BC-100CH) **29**
ELECTRICAL PARTS ..... **30 – 45**

Notes : DESTINATION ABBREVIATIONS

A : Australian model	M : South African model
B : British model	O : Chinese model
C : Canadian model	Q : South-east Asia model
D : German model	T : Taiwan model
E : European model	U : U.S.A. model
F : French model	V : General export model (110V)
H : North European model	W: General export model (220)
I : Indonesian model	N,X : General export model
J : Japanese model	Y : Export model
K : Korean model	

■ WARNING

Components having special characteristics are marked ⚠ and must be replaced with parts having specification equal to those originally installed.

- The numbers “QTY” show quantities for each unit.
- The parts with “--” in “**PART NO.**” are not available as spare parts.
- This mark “ } ” in the REMARKS column means these parts are interchangeable.
- The second letter of the shaded ( ) part number is O, not zero.
- The second letter of the shaded ( ) part number is I, not one.

■ OVERALL ASSEMBLY

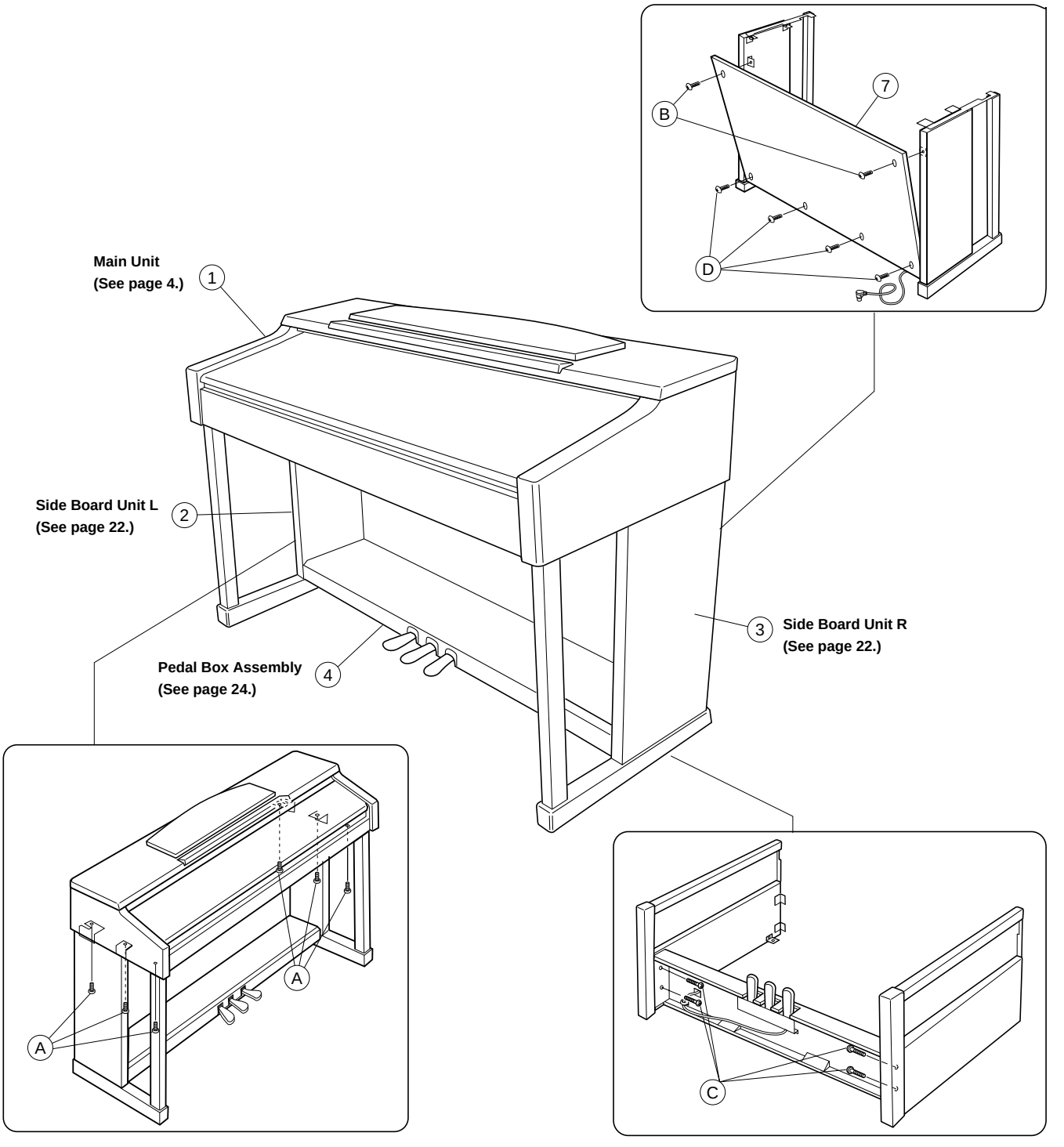

	REF NO.	PART NO.	DESCRIPTION			REMARKS	QTY	RANK
			OVERALL ASSEMBLY			CLP-150/150M/150C		
	1	--	Main Unit			CLP-150 U (V828100)		
	1	--	Main Unit			CLP-150M U (V854370)		
	1	--	Main Unit			CLP-150C U (V854410)		
	1	--	Main Unit			CLP-150 B,E (V828110)		
	1	--	Main Unit			CLP-150M B,E (V854380)		
	1	--	Main Unit			CLP-150C B,E (V854420)		
	1	--	Main Unit			CLP-150 N (V828120)		
	1	--	Main Unit			CLP-150M N (V854390)		
	1	--	Main Unit			CLP-150C N (V854430)		
	1	--	Main Unit			CLP-150 K (V984460)		
	1	--	Main Unit			CLP-150M K (V984470)		
	1	--	Main Unit			CLP-150C K (V984480)		
*	2	**V8433400**	Side Board Unit L	LEFT		CLP-150		22
*	2	**V8552000**	Side Board Unit L	LEFT		CLP-150M		
*	2	**V8552400**	Side Board Unit L	LEFT		CLP-150C		
*	3	**V8433500**	Side Board Unit R	RIGHT		CLP-150		22
*	3	**V8552100**	Side Board Unit R	RIGHT		CLP-150M		
*	3	**V8552500**	Side Board Unit R	RIGHT		CLP-150C		
	4	--	Pedal Box Assembly			CLP-150 (V843380)		
	4	--	Pedal Box Assembly			CLP-150M (V854910)		
	4	--	Pedal Box Assembly			CLP-150C (V854960)		
*	7	**V8432300**	Back Board Assembly			CLP-150		
*	7	**V8558900**	Back Board Assembly			CLP-150M		
*	7	**V8559200**	Back Board Assembly			CLP-150C		
			ACCESSORIES					
⚠		**VT015800**	AC Cord Set	U 2P 2.44m 7A		U		06
⚠		**VT016000**	AC Cord Set	B 2P 2.5m		B		08
⚠		**VT015900**	AC Cord Set	E 2P 2.5m		E,N		05
⚠		**V8911300**	AC Cord Set	K 2P 2.5m		K		
⚠		**VK726100**	Connector	CCT5902		N		05
		--	Bench	BC-102DR		CLP-150 U (V756390)		
		--	Bench	BC-102MH		CLP-150M U (V756400)		
		--	Bench	BC-102CH		CLP-150C U (V887870)		
		--	Bench	BC-100DR		CLP-150 N,K (V553140)		
		--	Bench	BC-100MH		CLP-150M N,K (V553150)		
		--	Bench	BC-100CH		CLP-150C N,K (V553160)		
*		**V8740600**	Headphone Hanger Set					07
*		**V8813600**	Screw Set			CLP-150/150M		04
*		**V9205200**	Screw Set			CLP-150C		
*		**X2568A00**	CD-ROM	12cm		U,B,E,N,K		03
*		**V8813600**	Screw Set			CLP-150/150M		04
*		**V9205200**	Screw Set			CLP-150C		
	A	**EG360020**	Bind Head Screw	6.0X16 MFZN2BL			6	01
	B	**VP367300**	Truss Head Screw	4.0X12 MFZN2BL		CLP-150/150M	2	01
	B	**V6135000**	Truss Head Screw	4.0X12 MFC2		CLP-150C	2	01
	C	**VQ448400**	Truss Head Screw	6.0X25 MFZN2BL			4	01
	D	**03747290**	Truss Head Tapping Screw-1	4.0X20 MFZN2BL		CLP-150/150M	4	01
	D	**VB164600**	Truss Head Tapping Screw-1	4.0X20 MFC2		CLP-150C	4	01
	E	**VR410300**	Cord Clamp Set					03
			JIGS					
		TX000670	Rod					

✻: New Parts

RANK: Japan only

■ MAIN UNIT

• Bottom view

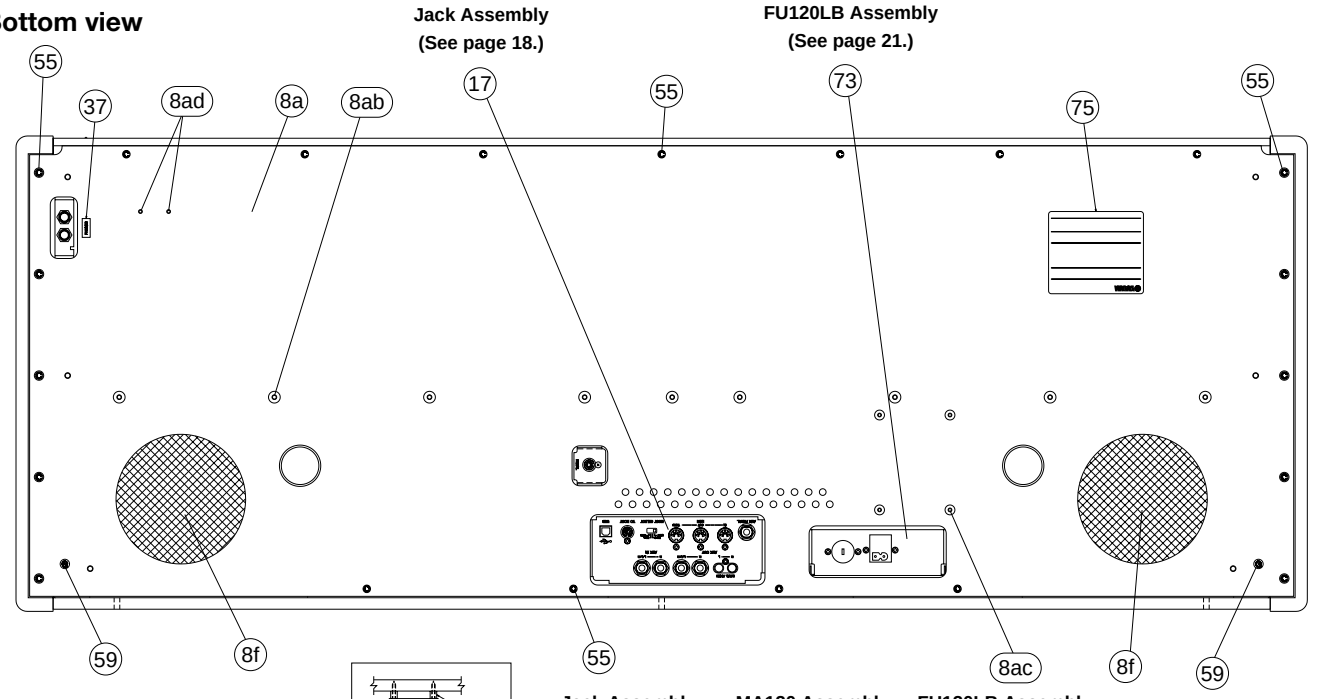

• Top view

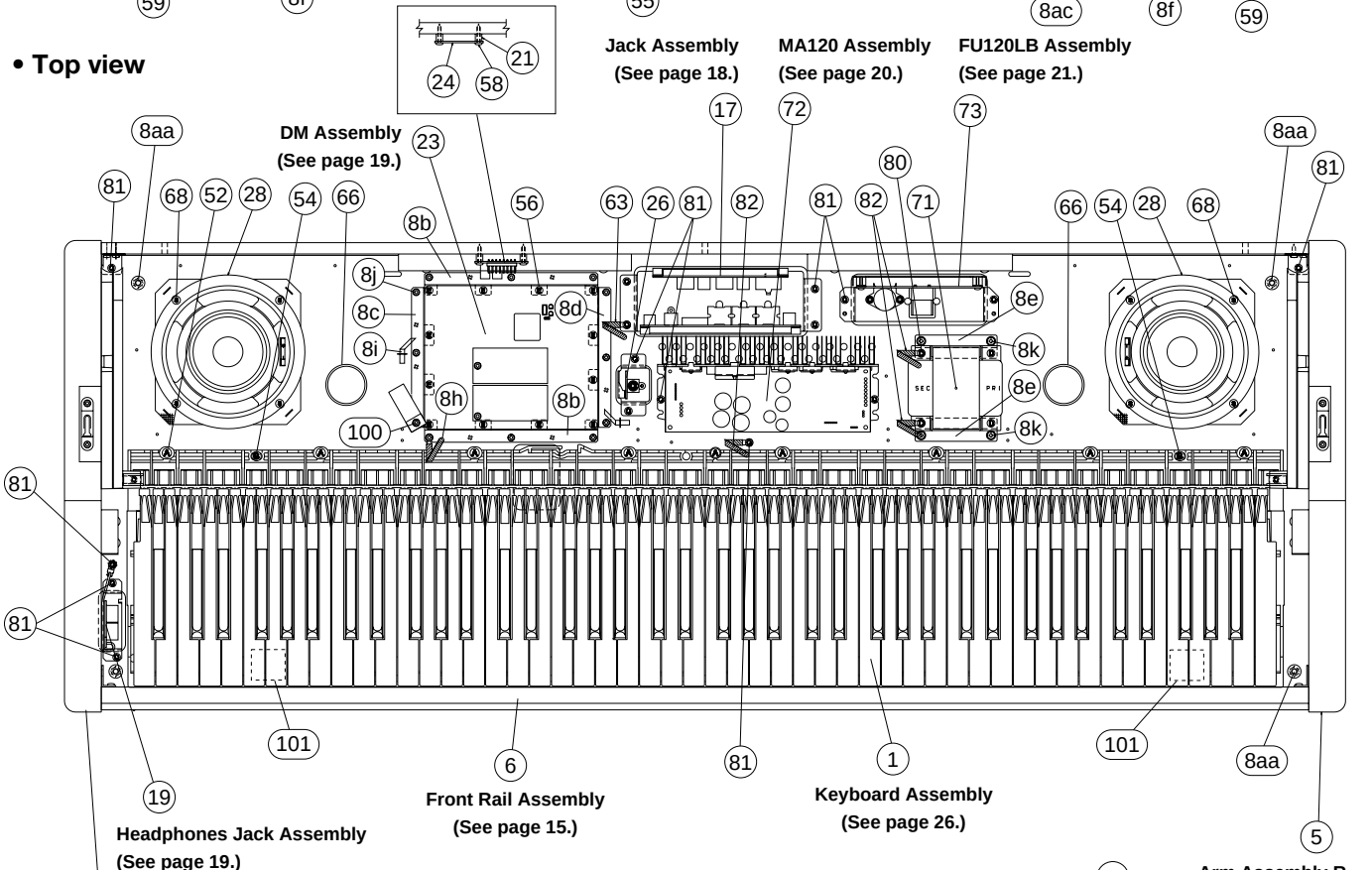

● See Z

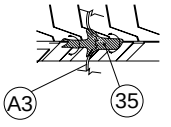

• Side view

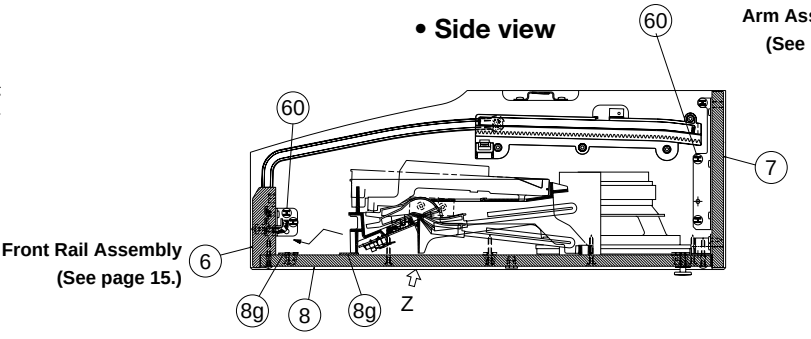

• Rear view

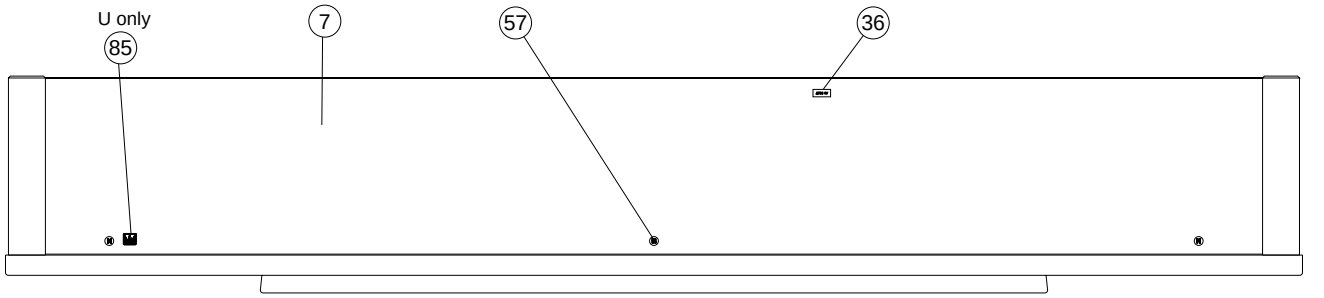

• Top view

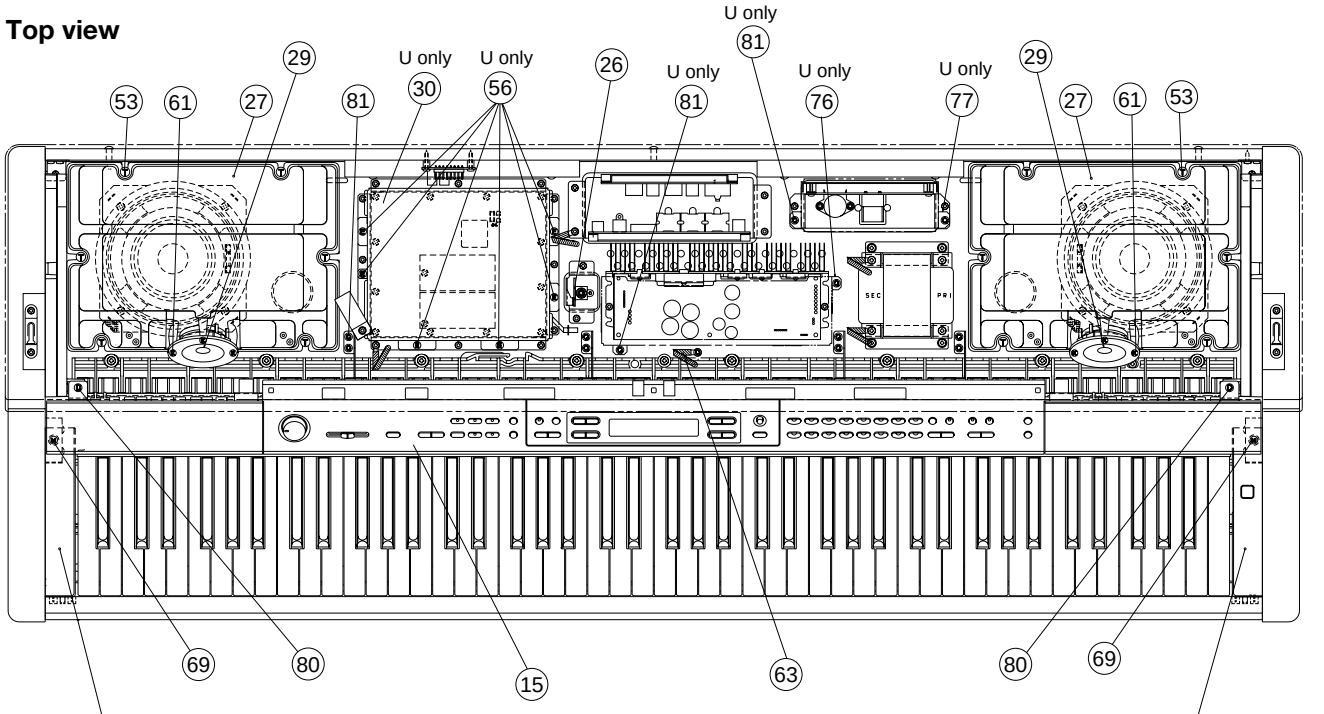

Panel Assembly
(See page 10.)

End Block Assembly L
(See page 16.)

End Block Assembly R
(See page 16.)

Music Rest Assembly
(See page 13.)

Top Board Assembly
(See page 9.)

Key Cover Assembly
(See page 17.)

● 26 **PK Connector**

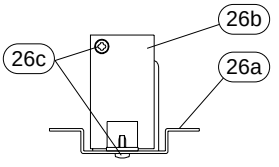

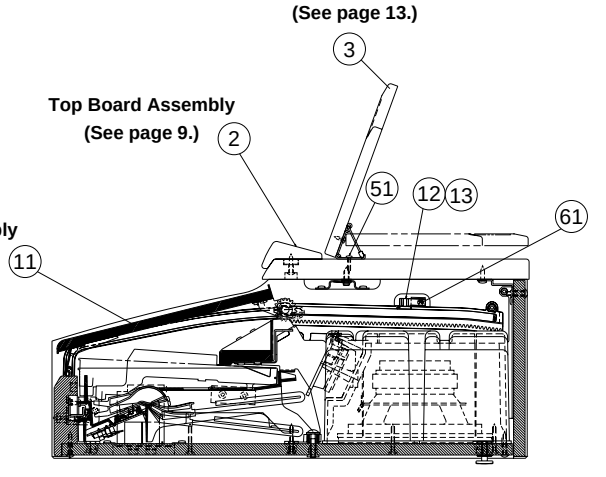

• Side view

	REF NO.	PART NO.	DESCRIPTION			REMARKS			QTY	RANK
			MAIN UNIT			CLP-150/150M/150C				
		--	Main Unit			CLP-150	U	(V828100)		
		--	Main Unit			CLP-150M	U	(V854370)		
		--	Main Unit			CLP-150C	U	(V854410)		
		--	Main Unit			CLP-150	B,E	(V828110)		
		--	Main Unit			CLP-150M	B,E	(V854380)		
		--	Main Unit			CLP-150C	B,E	(V854420)		
		--	Main Unit			CLP-150	N	(V828120)		
		--	Main Unit			CLP-150M	N	(V854390)		
		--	Main Unit			CLP-150C	N	(V854430)		
		--	Main Unit			CLP-150	K	(V984460)		
		--	Main Unit			CLP-150M	K	(V984470)		
		--	Main Unit			CLP-150C	K	(V984480)		
	17	--	Jack Assembly			U		(V964290)		
	17	--	Jack Assembly			B,E,N,K		(V862710)		
	30	--	DM Shield Cover Assembly			U		(V787810)		
	56	**EP600130**	Bind Head Tapping Screw-B	3.0X6 MFZN2Y		U			6	01
	70	--	Main Unit Sub Assembly			CLP-150		(V828150)		
	70	--	Main Unit Sub Assembly			CLP-150M		(V854490)		
	70	--	Main Unit Sub Assembly			CLP-150C		(V854500)		
⚠	71	**XQ426A00**	Power Transformer	29WP244 U		U				13
⚠	71	**XQ427B00**	Power Transformer	GA-120 E IEC65		B,E,K				14
⚠	71	**XQ428B00**	Power Transformer	GA-120 N		N				16
*	72	**V8583600**	MA120 Assembly			U				
*	72	**V8583700**	MA120 Assembly			B,E,N,K				
*	73	**V8780300**	FU120BL Assembly			U				
	73	**V7631600**	FU120LB Assembly			B,E,K				
	73	**V7631700**	FU120LB Assembly			N				
	75	--	Name Plate	YMMA		CLP-150	U	(V867370)		
	75	--	Name Plate	YMMA		CLP-150M	U	(V867420)		
	75	--	Name Plate	YMMA		CLP-150C	U	(V867470)		
	75	--	Name Plate	YMMA		CLP-150	B,E	(V867390)		
	75	--	Name Plate	YMMA		CLP-150M	B,E	(V867440)		
	75	--	Name Plate	YMMA		CLP-150C	B,E	(V867490)		
	75	--	Name Plate	YMMA		CLP-150	N	(V867400)		
	75	--	Name Plate	YMMA		CLP-150M	N	(V867450)		
	75	--	Name Plate	YMMA		CLP-150C	N	(V867500)		
	75	--	Name Plate	YMMA		CLP-150	K	(V958460)		
	75	--	Name Plate	YMMA		CLP-150M	K	(V958470)		
	75	--	Name Plate	YMMA		CLP-150C	K	(V958480)		
	76	**V2191000**	MA Cover Assembly			U				07
	77	**VV607200**	FU Cover Assembly			U				06
	80	**EP600240**	Bind Head Tapping Screw-B	4.0X10 MFZN2BL					6	01
	81	**EP030240**	Bind Head Tapping Screw-1	3.5X12 MFZN2Y		U			28	01
	81	**EP030240**	Bind Head Tapping Screw-1	3.5X12 MFZN2Y		B,E,N,K			24	01
	82	**CB817510**	Cord Binder	S-14B					3	03
	85	--	Graphic Mark			U		(V846210)		
		--	Main Unit Sub Assembly			CLP-150		(V828150)		
		--	Main Unit Sub Assembly			CLP-150M		(V854490)		
		--	Main Unit Sub Assembly			CLP-150C		(V854500)		
*	1	**V8278500**	Keyboard Assembly	GHD_EBUS A88 K6						
*	2	**V8339400**	Top Board Assembly			CLP-150				
*	2	**V8553200**	Top Board Assembly			CLP-150M				
*	2	**V8553700**	Top Board Assembly			CLP-150C				
*	3	**V8388000**	Music Rest Assembly			CLP-150				
*	3	**V8558200**	Music Rest Assembly			CLP-150M				
*	3	**V8558500**	Music Rest Assembly			CLP-150C				
*	4	**V8281900**	Arm Assembly L	LEFT		CLP-150				
*	4	**V8545100**	Arm Assembly L	LEFT		CLP-150M				
*	4	**V8546000**	Arm Assembly L	LEFT		CLP-150C				
*	5	**V8282000**	Arm Assembly R	RIGHT		CLP-150				
*	5	**V8545200**	Arm Assembly R	RIGHT		CLP-150M				
*	5	**V8546100**	Arm Assembly R	RIGHT		CLP-150C				
	6	--	Front Rail Assembly			CLP-150		(V821910)		
	6	--	Front Rail Assembly			CLP-150M		(V854950)		
	6	--	Front Rail Assembly			CLP-150C		(V854990)		
	6	--	Front Rail Assembly	DR Wrapping		CLP-150		(V900090)		
	6	--	Front Rail Assembly	DR Wrapping		CLP-150M		(V900100)		
	6	--	Front Rail Assembly	DR Wrapping		CLP-150C		(V900120)		

*: New Parts

RANK: Japan only

	REF NO.	PART NO.	DESCRIPTION			REMARKS		QTY	RANK
*	7	**V8432800**	Back Top Panel Assembly			CLP-150			
*	7	**V8547500**	Back Top Panel Assembly			CLP-150M			
*	7	**V8547700**	Back Top Panel Assembly			CLP-150C			
*	8	**V8431900**	Keybed Assembly			CLP-150/150M			
*	8	**V8894500**	Keybed Assembly			CLP-150C			
	8a	**--**	Keybed Assembly			CLP-150/150M	(V843200)		
	8a	**--**	Keybed Assembly			CLP-150C	(V889470)		
	8aa	**V6008700**	Nut	B 6.0X12.5 MFZN2BL				8	01
	8ab	**VA127400**	Nut	B 5.0X12 MFZN2BL				9	01
	8ac	**VA789400**	Nut	B 4.0X11.5 MFZN2BL				4	01
*	8ad	**V9001100**	Nut	TYPE I M4XL12.5				2	
	8b	**--**	Holder, DM				(V787780)	2	
	8c	**--**	Holder, DM L	LEFT			(V787790)		
	8d	**--**	Holder, DM R	RIGHT			(V787800)		
	8e	**V2431100**	Holder Assembly P.T.					2	07
	8ea	**--**	Holder, Power Transformer				(V243100)	2	
	8eb	**VA121600**	Bushing					4	01
	8ec	**VK431100**	FDD Spacer					4	01
	8ed	**VA121400**	Spacer					4	02
	8f	**VF823100**	Metal Net					2	03
	8g	**--**	Cushion Black	GH			(VZ75050)	2	
	8h	**CB817510**	Cord Binder	S-14B					03
	8i	**VU891300**	Cord Holder	L=80				2	03
	8j	**EP030240**	Bind Head Tapping Screw-1	3.5X12 MFZN2Y				11	01
	8k	**EG340410**	Bind Head Screw	4.0X20 MFZN2Y				4	01
	8l	**--**	Cushion	450X6XT2			(V005320)	2	
	9	**--**	End Block Assembly L	LEFT		CLP-150	(V925890)		
	9	**--**	End Block Assembly L	LEFT		CLP-150M	(V925920)		
	9	**--**	End Block Assembly L	LEFT		CLP-150C	(V925940)		
	10	**--**	End Block Assembly R	RIGHT		CLP-150	(V863320)		
	10	**--**	End Block Assembly R	RIGHT		CLP-150M	(V863380)		
	10	**--**	End Block Assembly R	RIGHT		CLP-150C	(V863390)		
*	11	**V8607500**	Key Cover Assembly			CLP-150			
*	11	**V8607600**	Key Cover Assembly			CLP-150M			
*	11	**V8607700**	Key Cover Assembly			CLP-150C			
	12	**VS312100**	Rack Cover L	LEFT					03
	13	**VS312200**	Rack Cover R	RIGHT					03
	15	**--**	Panel Assembly			CLP-150	(V829800)		
	15	**--**	Panel Assembly			CLP-150M	(V829810)		
	15	**--**	Panel Assembly			CLP-150C	(V829820)		
	19	**--**	Headphones Jack Assembly				(V878160)		
	21	**CB040950**	Spacer					4	03
	23	**--**	DM Assembly				(V878670)		
	24	**V2403300**	Circuit Board	NET1					05
	26	**--**	PK Connector				(V879350)		
	26a	**V7585400**	Angle, PK Connector						05
*	26b	**V8496600**	Circuit Board	PEDAL (DJK)					
	26c	**EP600190**	Bind Head Tapping Screw-B	3.0X8 MFZN2BL				2	01
	27	**V2630800**	Speaker Box Assembly					2	10
*	28	**X2566A00**	Speaker	16.0cm 8 ohm 60W		WOOFER		2	
	29	**XL455A00**	Speaker	5.0cm 16 ohm 60W		TWEETER		2	07
	35	**VP834600**	Adhesive Tape	12X50				2	02
	36	**--**	Label				(VT50100)		
	37	**--**	Label				(VS47810)		
	51	**EP030310**	Bind Head Tapping Screw-1	3.0X16 MFZN2BL				4	01
	52	**VV040700**	Pan Head Screw	PW5.0X25 MFZN2Y				9	01
	53	**EN630230**	Truss Head Tapping Screw-1	3.5X14 MFZN2Y				12	01
	54	**EP040230**	Bind Head Tapping Screw-1	4.0X14 MFZN2Y				2	01
	55	**VU952600**	Truss Head Tapping Screw-1	3.5X30 MFZN2BL				21	01
	56	**EP600130**	Bind Head Tapping Screw-B	3.0X6 MFZN2Y				12	01
	57	**VB934000**	Truss Head Screw	4.0X20 MFZN2BL		CLP-150/150M		3	01
	57	**V6141100**	Truss Head Screw	4.0X20 MFC2		CLP-150C		3	
	58	**EP030470**	Bind Head Tapping Screw-1	3.5X20 MFZN2Y				4	01
	59	**VN887900**	Guide Screw	6.0X14				2	03
	60	**EP030190**	Bind Head Tapping Screw-1	3.5X16 MFZN2Y				10	01
	61	**EP600250**	Bind Head Tapping Screw-B	3.0X8 MFZN2Y				8	01
	63	**CB817510**	Cord Binder	S-14B					03
	64	**CB069250**	Cord Holder	BK-1				3	01
	65	**VP834600**	Adhesive Tape	12X50				10	02
	66	**--**	Port Black	M40.0 L=100			(V602200)	2	

*: New Parts

RANK: Japan only

	REF NO.	PART NO.	DESCRIPTION			REMARKS	QTY	RANK
	68	**20338800**	Truss Head Tapping Screw-1	4.0X20 MFZN2Y			8	
	69	**VA076400**	Truss Head Tapping Screw-1	3.5X30 MFZN2Y			2	
	100	**EN630230**	Truss Head Tapping Screw-1	3.5X14 MFZN2Y				
	101	--	Electrical Adhesive Tape	40X20m		(V604530)		
	A1	--	Connector Assembly	3D VH 2P		(V876820)		
	A2	--	Connector Assembly	5D XH 3P		(V876830)		
	A4	--	Connector Assembly	KRD-KRD 5P-250		(VK10380)		
	A6	--	Connector Assembly	KRD-KRD 11P-250		(VK10460)		
	A7	--	Connector Assembly	3DB PH 7P		(V876850)		
	A8	--	Connector Assembly	NW VH 4P		(V876860)		
	A9	**VK106000**	Connector Assembly	KRD-KRD 9P-300				05
*	A10	**V9289300**	Connector Assembly	EBUS-LF KRD 7P-900				
	A11	--	Connector Assembly	HP		(V899560)		
	A13	--	Connector Assembly	SP VH 8P		(V876880)		
	A14	--	Connector Assembly	KRD-KRD 3P-300		(VK10530)		

*: New Parts

RANK: Japan only

■ TOP BOARD ASSEMBLY

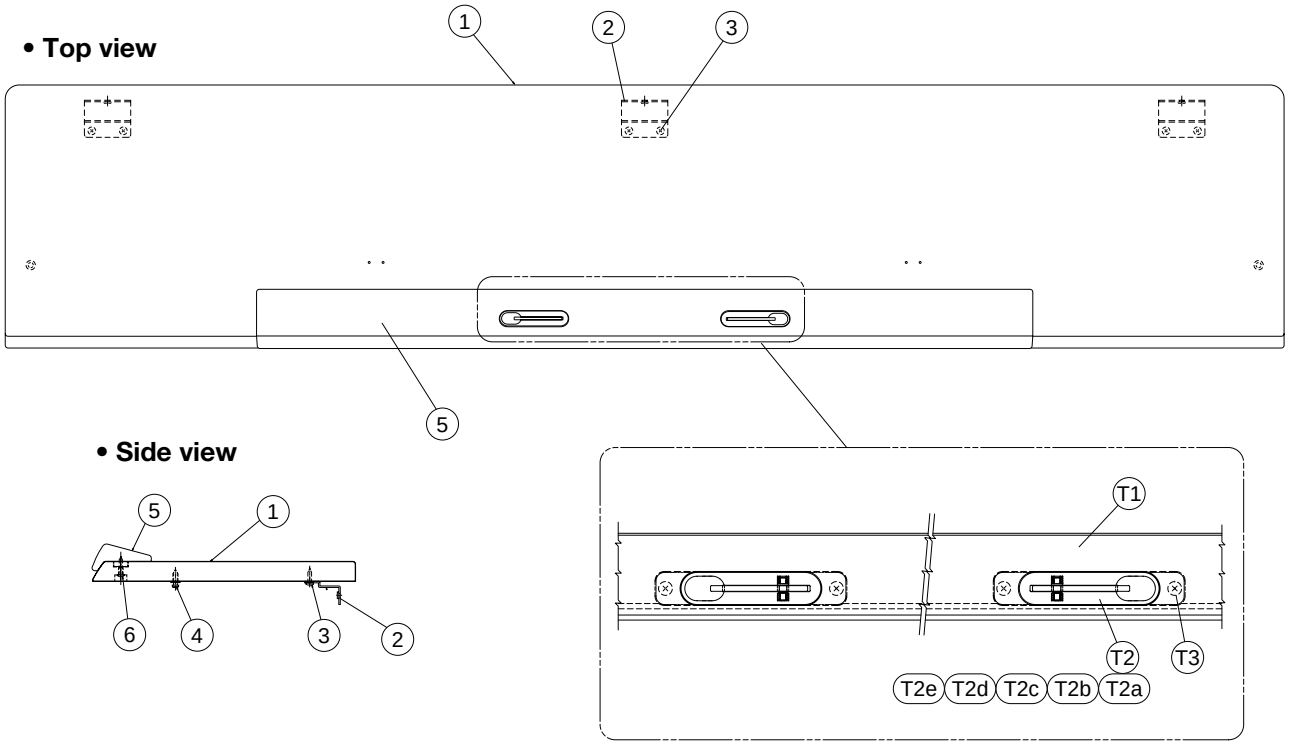

	REF NO.	PART NO.	DESCRIPTION			REMARKS		QTY	RANK
			TOP BOARD ASSEMBLY			CLP-150/150M/150C			
*		**V8339400**	Top Board Assembly			CLP-150			
*		**V8553200**	Top Board Assembly			CLP-150M			
*		**V8553700**	Top Board Assembly			CLP-150C			
	1	--	Top Board			CLP-150	(V828780)		
	1	--	Top Board			CLP-150M	(V855330)		
	1	--	Top Board			CLP-150C	(V855380)		
	2	**VQ485800**	Holder, Top Board					3	05
	3	**EP040170**	Bind Head Tapping Screw-1	4.0X16 MFZN2Y				6	01
	4	**VV444100**	Strap Screw					2	03
	5	--	Score Support Assembly			CLP-150	(V829300)		
	5	--	Score Support Assembly			CLP-150M	(V855430)		
	5	--	Score Support Assembly			CLP-150C	(V855460)		
	6	**EN630260**	Truss Head Tapping Screw-1	3.5X20 MFZN2Y				5	01
		--	Score Support Assembly			CLP-150	(V829300)		
		--	Score Support Assembly			CLP-150M	(V855430)		
		--	Score Support Assembly			CLP-150C	(V855460)		
	T1	--	Score Support			CLP-150	(V829330)		
	T1	--	Score Support			CLP-150M	(V855440)		
	T1	--	Score Support			CLP-150C	(V855470)		
	T2	**V7114400**	Music Stopper Assembly			CLP-150		2	
	T2	**V7567500**	Music Stopper Assembly			CLP-150M		2	
*	T2	**V8902200**	Music Stopper Assembly			CLP-150C		2	
	T2a	--	Case, Music Stopper	A			(V711320)	2	
	T2b	--	Case, Music Stopper	B		CLP-150/150M	(V711330)	2	
	T2b	--	Case, Music Stopper	B		CLP-150C	(V890200)		
	T2c	**V7113700**	Music Stopper Assembly	BRASS				2	05
	T2d	**V7113400**	Bushing					4	
	T2e	**EP600250**	Bind Head Tapping Screw-B	3.0X8 MFZN2Y				2	01
	T3	**EP030320**	Bind Head Tapping Screw-1	3.5X10 MFZN2BL				4	01

*: New Parts

RANK: Japan only

■ PANEL ASSEMBLY

• **Bottom view**

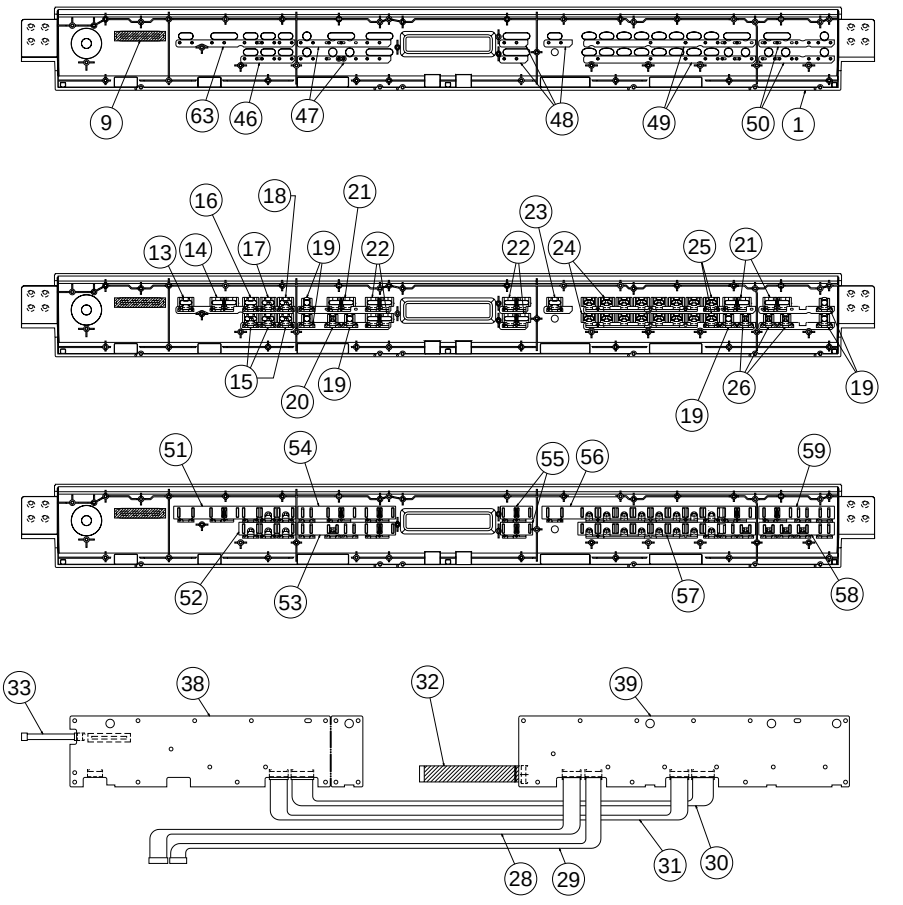

• **Bottom view**

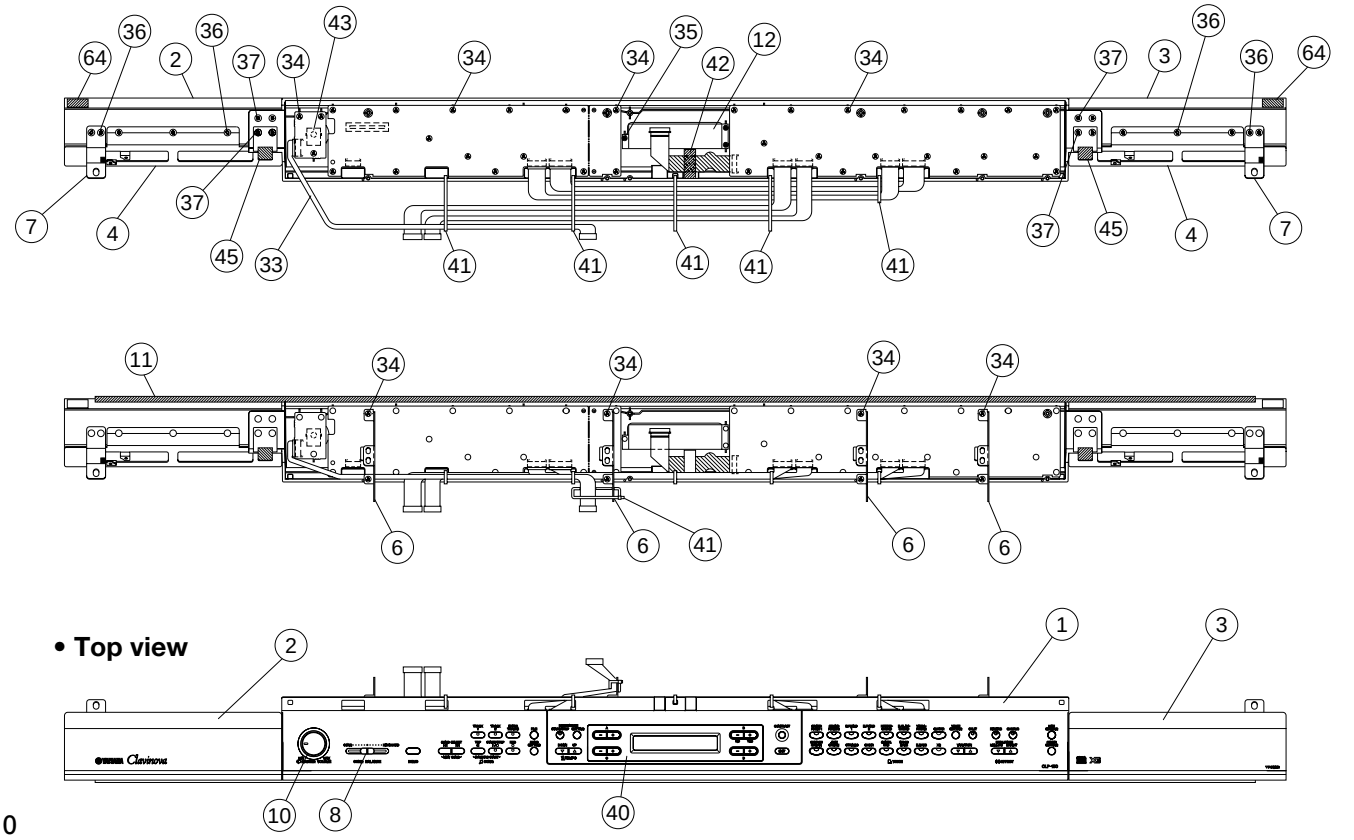

• **Top view**

	REF NO.	PART NO.	DESCRIPTION			REMARKS	QTY	RANK
			PANEL ASSEMBLY			CLP-150/150M/150C		
		--	Panel Assembly			CLP-150 (V829800)		
		--	Panel Assembly			CLP-150M (V829810)		
		--	Panel Assembly			CLP-150C (V829820)		
*	1	V8299000	Control Panel			CLP-150/150M		
*	1	V8299100	Control Panel			CLP-150C		
*	2	V8298300	Panel L	LEFT		CLP-150		
*	2	V8298400	Panel L	LEFT		CLP-150M		
*	2	V8298500	Panel L	LEFT		CLP-150C		
*	3	V8829300	Panel R	RIGHT		CLP-150		
*	3	V8829400	Panel R	RIGHT		CLP-150M		
*	3	V8829500	Panel R	RIGHT		CLP-150C		
*	4	V8832200	Grille Assembly	A		CLP-150/150M	2	
*	4	V8832400	Grille Assembly	A		CLP-150C	2	
	6	--	Control Panel Holder			(V829560)	4	
	7	--	Control Panel Holder A			(V907460)	2	
	8	V8085100	Slide Knob			SONG BALANCE		01
	9	--	Dust Proof Cloth	54X10X0.25		(V591130)		
	10	VU432400	Knob Black			MASTER VOLUME		01
	11	VU638700	Felt	MK				05
*	12	V8811300	LCD	SCLCMDYAMS0049				
*	13	V8670000	Button Brown	B		DEMO		
*	14	V8064400	Button Gray	A1 x2		SONG SELECT		
	15	V8065500	Button Dark Gray	B1 LENS		TRACK 1/2, EXTRA TRACKS	3	05
	16	V8065100	Button Dark Gray	B1		TOP		04
*	17	V8670300	Button Green	B LENS(GREEN)		SONG START/STOP		
*	18	V8670200	Button Dark Gray	B LENS(RED)		REC		
	19	V8066000	Button Dark Gray	D1		FILE, SETTING(SONG, METRONOME, MIDI, OTHER, VOICE)	6	04
*	20	V8671400	Button Green	D LENS(GREEN)		METRONOME START/STOP		
	21	V8064900	Button Gray	A1 x2		TEMPO, VARIATION, BRILLIANCE	3	05
*	22	V8671200	Button Gray	A1b x2		LCD A/B/C/D	4	
*	23	V8670700	Button Gray	B1a x1		EDIT		
	24	V8065800	Button Dark Gray	C1 x7		GRAND PIANO 1/2, E.PIANO 1/2, HARPSICHORD, E.CLAVICHORD, VIBRAPHONE, CHURCH ORGAN, JAZZ ORGAN, STRINGS, CHOIR, E.BASS, WOOD BASS, SYNTH.PAD	2	06
*	25	V8465000	Button Dark Gray	E x1		GUITAR, XG	2	
	26	V8066100	Button Dark Gray	D1		SPRIT, REVERB, CHORUS	3	05
	28	--	Connector Assembly	KRD-KRD 9P-700		(VK11840)		
	29	--	Connector Assembly	KRD-KRD 8P-700		(VK11830)		
	30	VK110000	Connector Assembly	KRD-KRD 11P-400				06
	31	--	Connector Assembly	KRD-KRD 9P-400		(VK10990)		
*	32	V9384800	FFC Cable	16P 110mm				
	33	--	Connector Assembly	VOL PH 8P		(V876870)		
	34	EP600250	Bind Head Tapping Screw-B	3.0X8 MFZN2Y			42	01
	35	VD791000	Bind Head Tapping Screw-B	2.6X10 MFZN2Y			3	01
	36	EP030230	Bind Head Tapping Screw-1	3.5X10 MFZN2Y			10	01
	37	EP030340	Bind Head Tapping Screw-1	3.5X12 MFZN2BL			8	01
*	38	V8455100	Circuit Board	PNL				
*	39	V8502800	Circuit Board	PNR				
*	40	V8345900	LCD Cover					
	41	CB069250	Cord Holder	BK-1			7	01
	42	VP834600	Adhesive Tape	12X50				02
*	43	V8562800	Circuit Board	MV2				
	45	--	Control Panel Holder			(V884220)	2	
	46	--	Nonwoven Fabric Cloth	11 57.4X7.5X0.5		(V889010)		
	47	--	Nonwoven Fabric Cloth	12 99X7.5X0.5		(V889020)	2	
	48	--	Nonwoven Fabric Cloth	13 30X7.5X0.5		(V889030)	3	
	49	--	Nonwoven Fabric Cloth	14 182X7.5X0.5		(V889040)	2	
	50	--	Nonwoven Fabric Cloth	15 80X7.5X0.5		(V889050)	2	
	51	--	Nonwoven Fabric Cloth	21 129.3X13.5X0.5		(V889060)		
	52	--	Nonwoven Fabric Cloth	22 60.3X13.5X0.5		(V889070)		
	53	--	Nonwoven Fabric Cloth	23 103.5X13.5X0.5		(V889080)		
	54	--	Nonwoven Fabric Cloth	24 103.5X13.5X0.5		(V889090)		
	55	--	Nonwoven Fabric Cloth	H		(V860690)	2	

*: New Parts

RANK: Japan only

REF NO.	PART NO.	DESCRIPTION			REMARKS	QTY	RANK
56	--	Nonwoven Fabric Cloth	25 226X13.5X0.5		(V889100)		
57	--	Nonwoven Fabric Cloth	26 188X13.5X0.5		(V889110)		
58	--	Nonwoven Fabric Cloth	27 80X13.5X0.5		(V889120)		
59	--	Nonwoven Fabric Cloth	28 80X13.5X0.5		(V889130)		
63	--	Nonwoven Fabric Cloth	16 126X7.5X0.5		(V889140)		
64	--	Nonwoven Fabric Cloth	22X10X0.35		(V257670)	2	

✻: New Parts

RANK: Japan only

■ MUSIC REST ASSEMBLY

• **Rear view**

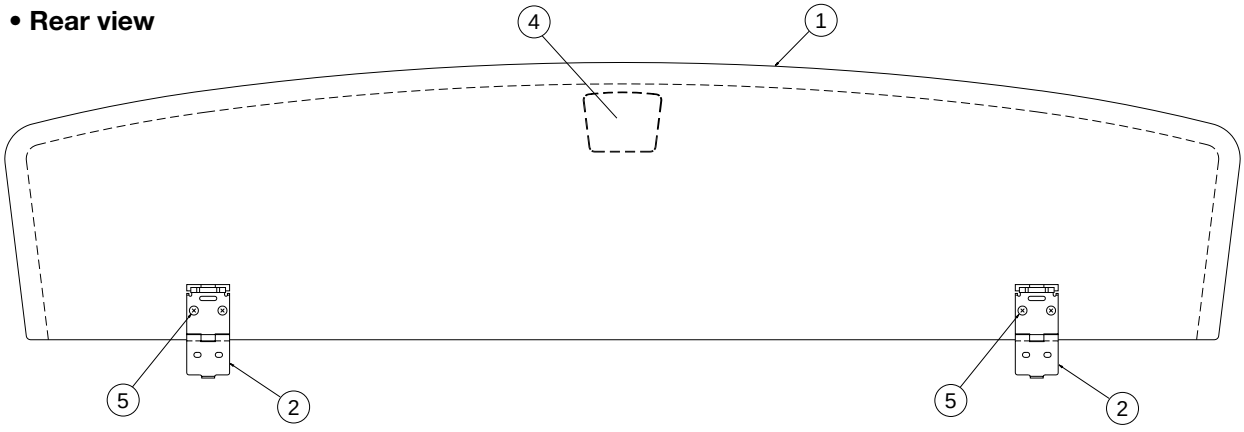

• **Side view**

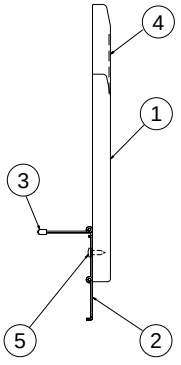

	REF NO.	PART NO.	DESCRIPTION			REMARKS		QTY	RANK
			MUSIC REST ASSEMBLY			CLP-150/150M/150C			
*		**V8388000**	Music Rest Assembly			CLP-150			
*		**V8558200**	Music Rest Assembly			CLP-150M			
*		**V8558500**	Music Rest Assembly			CLP-150C			
	1	**--**	Music Rest			CLP-150	(V842650)		
	1	**--**	Music Rest			CLP-150M	(V855680)		
	1	**--**	Music Rest			CLP-150C	(V855720)		
	2	**V8437600**	Hinge	1STEP 1.6mm YMMA				2	
	3	**VV965900**	Cap	T=1.6mm				2	03
	4	**V5782300**	Badge	CLAVINOVA BRASS					05
	5	**20404200**	Bind Head Tapping Screw-1	3.0X10 MFZN2BL				4	

✻: New Parts

RANK: Japan only

■ ARM ASSEMBLY

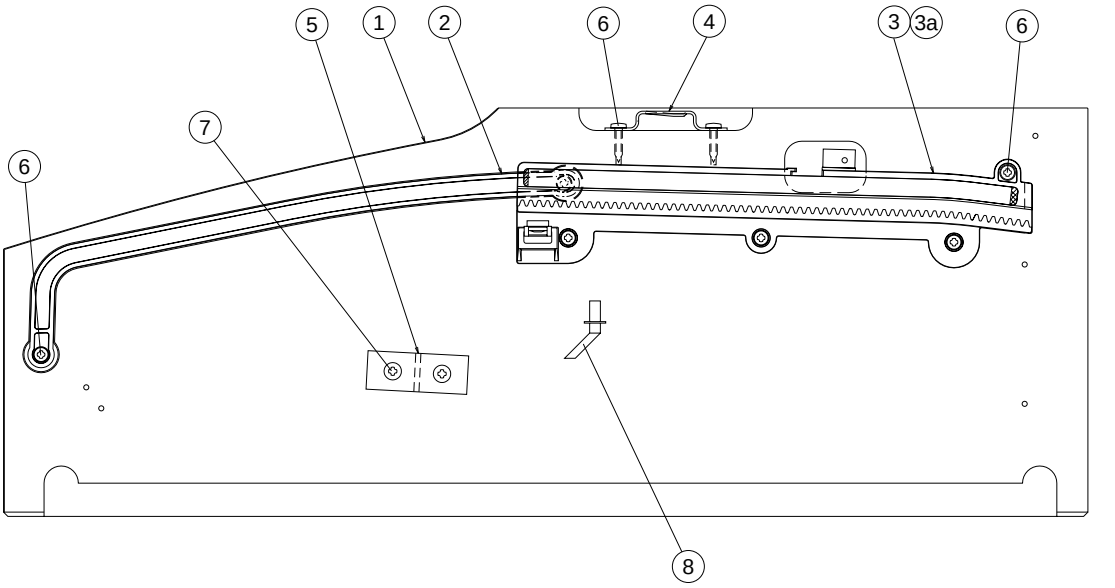

● Arm Assembly L

	REF NO.	PART NO.	DESCRIPTION			REMARKS		QTY	RANK
			ARM ASSEMBLY L	LEFT		CLP-150/150M/150C			
*		**V8281900**	Arm Assembly L	LEFT		CLP-150			
*		**V8545100**	Arm Assembly L	LEFT		CLP-150M			
*		**V8546000**	Arm Assembly L	LEFT		CLP-150C			
	1	**--**	Side Cover L	LEFT		CLP-150	(V828950)		
	1	**--**	Side Cover L	LEFT		CLP-150M	(V854530)		
	1	**--**	Side Cover L	LEFT		CLP-150C	(V854620)		
	2	**V4949100**	Guide Rail L	LEFT		CLP-150/150M			03
*	2	**V6023800**	Guide Rail L	LEFT		CLP-150C			
*	3	**V8553000**	Rack Assembly L	LEFT					
	3a	**VV435100**	Nut	M4 WUSN-4039					01
	4	**VV444200**	Holder, Top Board	1.20					03
	5	**--**	Crosspiece				(V861370)		
	6	**EP030260**	Bind Head Tapping Screw-1	3.5X16 MFZN2BL				9	01
	7	**VU952600**	Truss Head Tapping Screw-1	3.5X30 MFZN2BL				2	01
	8	**VU891300**	Cord Holder Black	L80					03

*: New Parts

RANK: Japan only

● Arm Assembly R

	REF NO.	PART NO.	DESCRIPTION			REMARKS		QTY	RANK
			ARM ASSEMBLY R	RIGHT		CLP-150/150M/150C			
*		**V8282000**	Arm Assembly R	RIGHT		CLP-150			
*		**V8545200**	Arm Assembly R	RIGHT		CLP-150M			
*		**V8546100**	Arm Assembly R	RIGHT		CLP-150C			
	1	**--**	Side Cover R	RIGHT		CLP-150	(V828990)		
	1	**--**	Side Cover R	RIGHT		CLP-150M	(V854540)		
	1	**--**	Side Cover R	RIGHT		CLP-150C	(V854630)		
	2	**V4949300**	Guide Rail R	RIGHT		CLP-150C/150M			03
*	2	**V6024000**	Guide Rail R	RIGHT		CLP-150C			
*	3	**V8553100**	Rack Assembly R	RIGHT					
	3a	**VV435100**	Nut	M4 WUSN-4039					01
	4	**VV444200**	Holder, Top Board	1.20					03
	5	**--**	Crosspiece				(V861370)		
	6	**EP030260**	Bind Head Tapping Screw-1	3.5X16 MFZN2BL				8	01
	7	**VU952600**	Truss Head Tapping Screw-1	3.5X30 MFZN2BL				2	01
	8	**VU891300**	Cord Holder Black	L80					03

*: New Parts

RANK: Japan only

■ FRONT RAIL ASSEMBLY

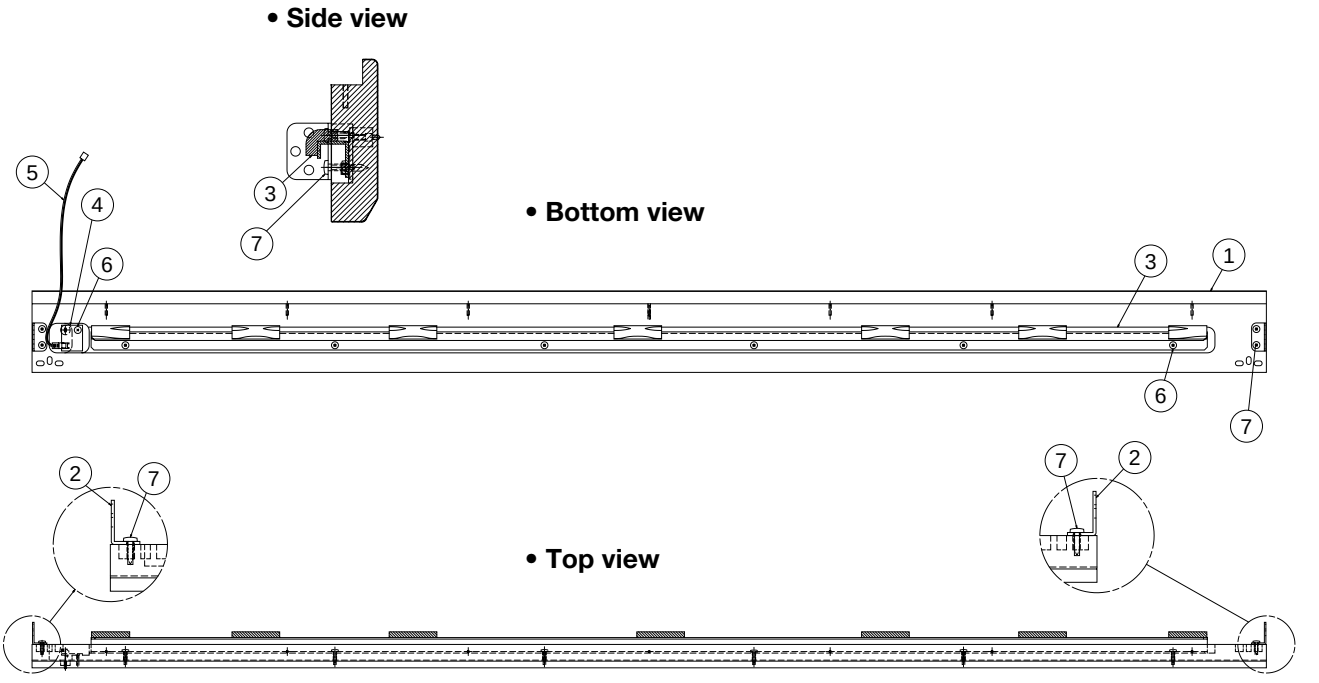

	REF NO.	PART NO.	DESCRIPTION			REMARKS		QTY	RANK
			FRONT RAIL ASSEMBLY			CLP-150/150M/150C			
		--	Front Rail Assembly			CLP-150	(V821910)		
		--	Front Rail Assembly			CLP-150M	(V854950)		
		--	Front Rail Assembly			CLP-150C	(V854990)		
		--	Front Rail Assembly	DR Wrapping		CLP-150	(V900090)		
		--	Front Rail Assembly	DR Wrapping		CLP-150M	(V900100)		
		--	Front Rail Assembly	DR Wrapping		CLP-150C	(V900120)		
*	1	**V8243700**	Front Rail			CLP-150			
*	1	**V8559900**	Front Rail			CLP-150M			
*	1	**V8560500**	Front Rail			CLP-150C			
	2	--	Holder, Rail	1.6 L			(V526350)	2	
	3	--	Holder Assembly, Keyboard				(V760310)		
	4	**VN637600**	Circuit Board	PL (YCJ)					03
	4	**VU659100**	Circuit Board	PL (YMMA)					03
	5	--	Connector Assembly	KRD-KRD 2P-150			(VK09960)		
	6	**EP030340**	Bind Head Tapping Screw-1	3.5X12 MFZN2BL				7	01
	7	**EP030260**	Bind Head Tapping Screw-1	3.5X16 MFZN2BL				4	01

*: New Parts

RANK: Japan only

■ END BLOCK ASSEMBLY

● End Block Assembly L

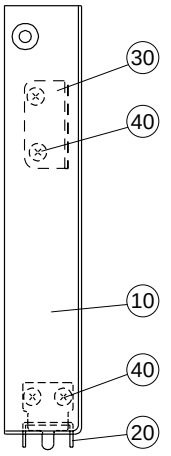

● End Block Assembly R

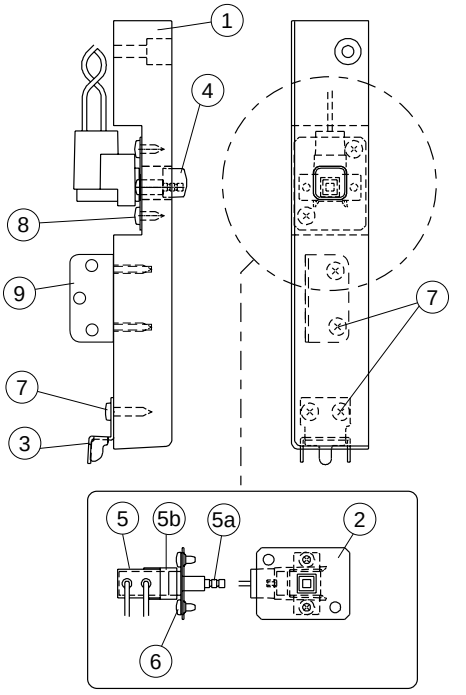

● End Block Assembly L

	REF NO.	PART NO.	DESCRIPTION			REMARKS		QTY	RANK
			END BLOCK ASSEMBLY L	LEFT		CLP-150/150M/150C			
		--	End Block Assembly L	LEFT		CLP-150	(V925890)		
		--	End Block Assembly L	LEFT		CLP-150M	(V925920)		
		--	End Block Assembly L	LEFT		CLP-150C	(V925940)		
*	10	V9351000	End Block L	LEFT		CLP-150			
*	10	V9351100	End Block L	LEFT		CLP-150M			
*	10	V8605500	End Block L	LEFT		CLP-150C			
	20	--	Angle H	1.2 L			(V533550)		
	30	--	Angle K	1.6 L			(V526350)		
	40	EP030190	Bind Head Tapping Screw-1	3.5X16 MFZN2Y				2	01

✻: New Parts

RANK: Japan only

● End Block Assembly R

	REF NO.	PART NO.	DESCRIPTION			REMARKS		QTY	RANK
			END BLOCK ASSEMBLY R	RIGHT		CLP-150/150M/150C			
		--	End Block Assembly R	RIGHT		CLP-150	(V863320)		
		--	End Block Assembly R	RIGHT		CLP-150M	(V863380)		
		--	End Block Assembly R	RIGHT		CLP-150C	(V863390)		
*	1	V9351500	End Block R	RIGHT		CLP-150			
*	1	V9351600	End Block R	RIGHT		CLP-150M			
*	1	V8607300	End Block R	RIGHT		CLP-150C			
	2	--	Holder, Power Switch	0.8			(V522000)		
	3	--	Angle H	1.2 L			(V533550)		
	4	VF663400	Knob Black			CLP-150/150M POWER			02
	4	V6250700	Knob Brown			CLP-150C POWER			01
*	5	V8768900	Power Switch Assembly	PSW					
⚠	5a	VC843500	Push Switch	SDDLB1216A J.U.C.S		POWER			03
	5b	V5800800	Switch Cover Ivory/Black						01
	6	EP600230	Bind Head Tapping Screw-B	3.0X6 MFZN2BL				2	01
	7	EP030190	Bind Head Tapping Screw-1	3.5X16 MFZN2Y				4	01
	8	EP030320	Bind Head Tapping Screw-1	3.5X10 MFZN2BL				2	01
	9	--	Angle K	1.6 L			(V526350)		

✻: New Parts

RANK: Japan only

■ KEY COVER ASSEMBLY

• **Bottom view**

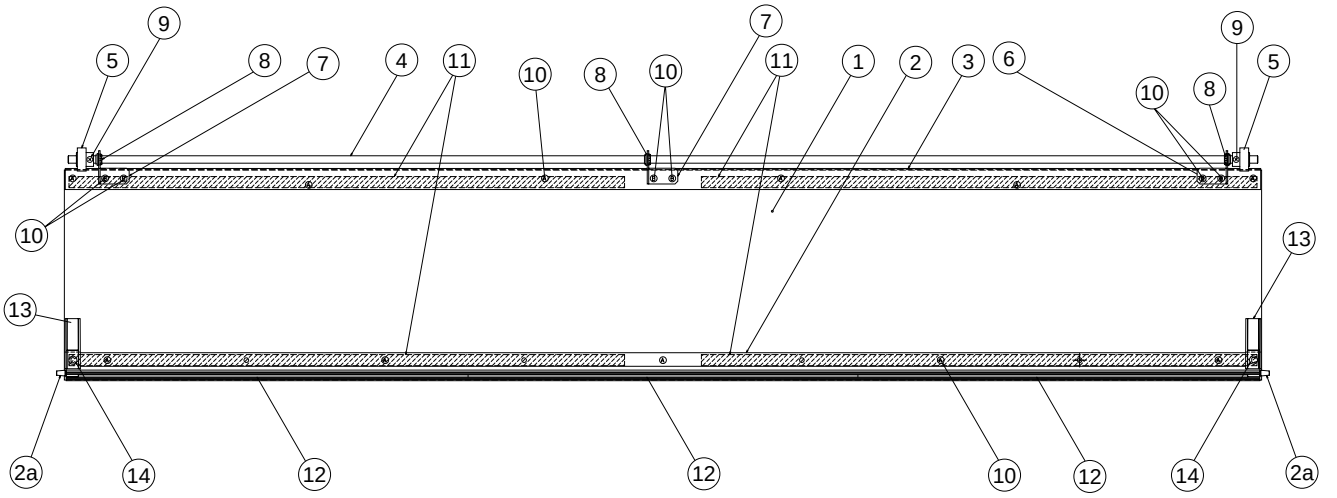

• **Side view**

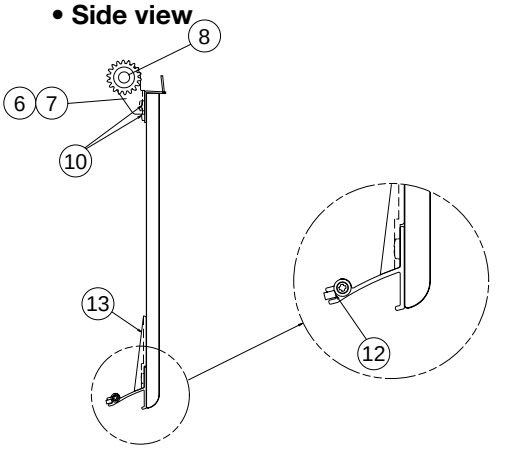

	REF NO.	PART NO.	DESCRIPTION			REMARKS	QTY	RANK
			KEY COVER ASSEMBLY			CLP-150/150M/150C		
*		**V8607500**	Key Cover Assembly			CLP-150		
*		**V8607600**	Key Cover Assembly			CLP-150M		
*		**V8607700**	Key Cover Assembly			CLP-150C		
	1	--	Key Cover			CLP-150 (V844670)		
	1	--	Key Cover			CLP-150M (V856100)		
	1	--	Key Cover			CLP-150C (V856130)		
	2	**V4961900**	Sash Assembly	FRONT				10
	2a	**V4964400**	Guide Pin				2	
	3	--	Sash	REAR		(V664750)		
	4	--	Rod			(V496240)		
	5	**VT190400**	Gear				2	03
	6	**VV285600**	Holder, Rod L	LEFT				03
	7	**VV285700**	Holder, Rod R	RIGHT			2	03
	8	**VS368500**	Bushing				3	03
	9	**EG330060**	Bind Head Screw	3.0X10 MFZN2Y			2	01
	10	**VN920900**	Bind Head Tapping Screw-1	3.5X8 MFZN2BL			17	01
	11	--	Adhesive Tape	#500 600X12		(VO02370)	4	
*	12	**V9465400**	Cushion	H-32 426X2.5XT4			3	
	13	**V5902900**	Block				2	02
	14	**EP030230**	Bind Head Tapping Screw-1	3.5X10 MFZN2Y			2	01

*: New Parts

RANK: Japan only

■ JACK ASSEMBLY

• Front view

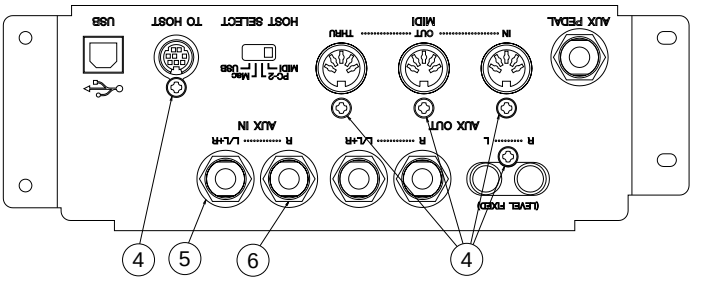

• Top view

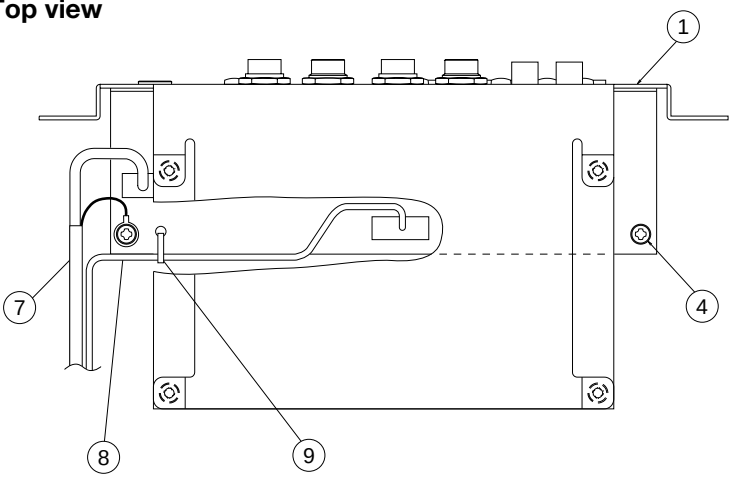

• Side view

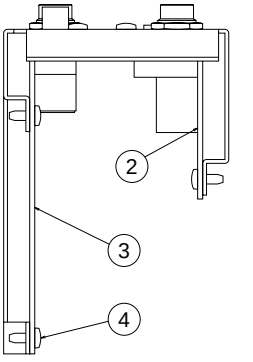

	REF NO.	PART NO.	DESCRIPTION			REMARKS		QTY	RANK
			JACK ASSEMBLY			CLP-150/150M/150C			
		--	Jack Assembly			U	(V964290)		
		--	Jack Assembly			B,E,N,K	(V862710)		
	1	--	Angle, Jack				(V862720)		
*	2	**V8496500**	Circuit Board	DJK					
*	3	**V8499900**	Circuit Board	AJK					
	4	**EP600190**	Bind Head Tapping Screw-B	3.0X8 MFZN2BL				11	01
	5	**VJ869400**	Washer Black					5	02
	6	**VB508600**	Hexagonal Nut	12.0 14X2 MFZN2BL				5	01
	7	--	USB Cable				(V933990)		
	8	--	Connector Assembly	DJK-LF PH-8P		U	(V961400)		
	8	--	Connector Assembly	DJK PH-8P		B,E,N,K	(V937590)		
	9	**CB069250**	Cord Holder	BK-1					01

*: New Parts

RANK: Japan only

■ HEADPHONES JACK ASSEMBLY

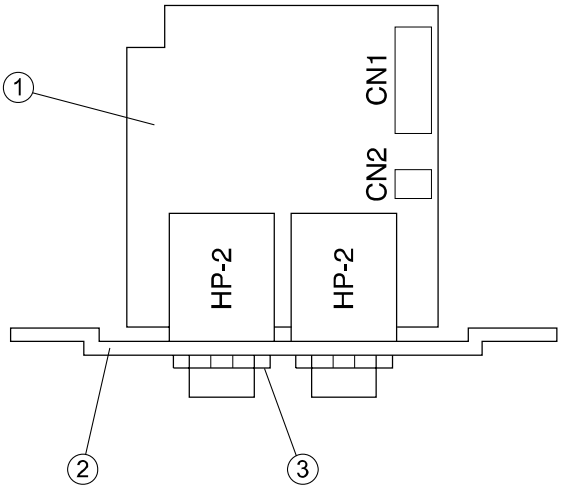

	REF NO.	PART NO.	DESCRIPTION			REMARKS	QTY	RANK
			HEADPHONES JACK ASSEMBLY			CLP-150/150M/150C		
		--	Headphones Jack Assembly			(V878160)		
*	1	**V8781900**	Circuit Board	HP				
	2	**VN631800**	Angle, Headphone					04
	3	**VB508600**	Hexagonal Nut	12.0 14X2 MFZN2BL			2	01

✻: New Parts

RANK: Japan only

■ DM ASSEMBLY

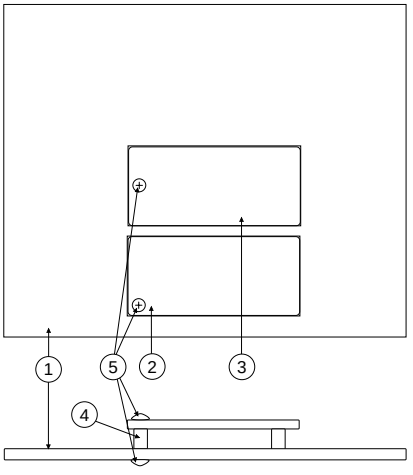

	REF NO.	PART NO.	DESCRIPTION			REMARKS	QTY	RANK
			DM ASSEMBLY			CLP-150/150M/150C		
		--	DM Assembly			(V878670)		
*	1	**V8540500**	Circuit Board	DM				
*	2	**V8544400**	Circuit Board	WML				
*	3	**V8544500**	Circuit Board	WMH				
*	4	**V8868000**	Spacer				2	
	5	**EG330040**	Bind Head Screw	3.0X6 MFZN2Y			4	01

✻: New Parts

RANK: Japan only

■ MA120 ASSEMBLY

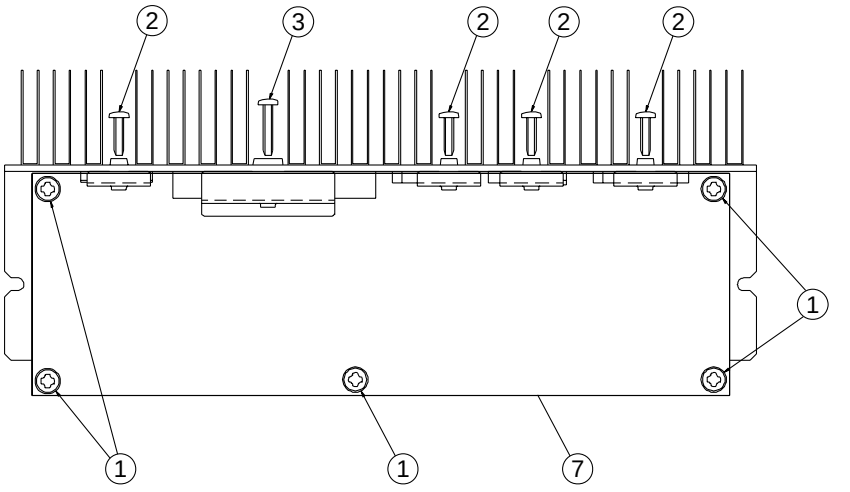

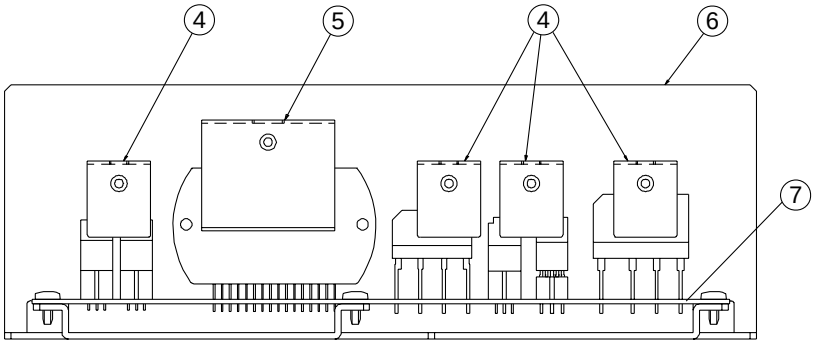

	REF NO.	PART NO.	DESCRIPTION			REMARKS	QTY	RANK
			MA120 ASSEMBLY			CLP-150/150M/150C		
*		**V8583600**	MA120 Assembly			U		
*		**V8583700**	MA120 Assembly			B,E,N,K		
	1	**EP640410**	Bind Head Tapping Screw-B	4.0X8 MFZN2Y			5	01
	2	**EP600220**	Bind Head Tapping Screw-B	3.0X10 MFZN2Y			4	01
	3	**EP600390**	Bind Head Tapping Screw-B	3.0X16 MFZN2Y				01
	4	**VT461100**	Transistor Holder	A			4	03
	5	**VT461200**	Transistor Holder	B				03
	6	**VT444300**	Heat Sink					11
	7	--	Circuit Board	MA120		U (V858380)(V859370)		
	7	--	Circuit Board	MA120		B,E,N,K (V859380)(V858390)		

✻: New Parts

RANK: Japan only

■ FU120LB ASSEMBLY

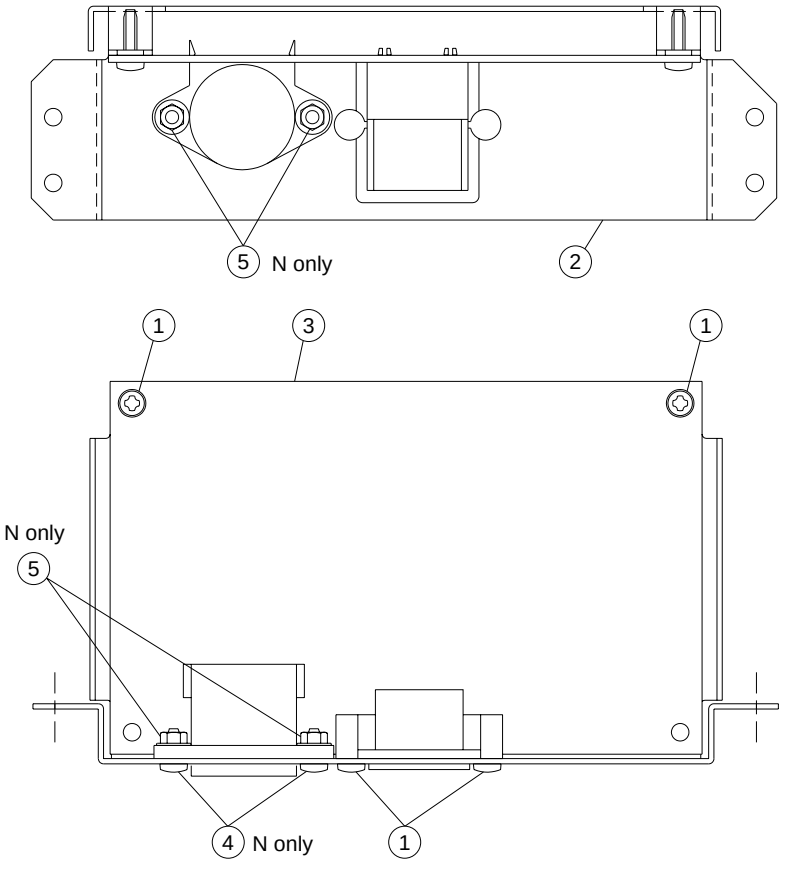

	REF NO.	PART NO.	DESCRIPTION			REMARKS	QTY	RANK
			FU120LB ASSEMBLY			CLP-150/150M/150C		
*		**V8780300**	FU120BL Assembly			U		
		V7631600	FU120LB Assembly			B,E,K		
		V7631700	FU120LB Assembly			N		
	1	**EP600190**	Bind Head Tapping Screw-B	3.0X8 MFZN2BL			4	01
	2	**V7585500**	Panel, AC Inlet			U,B,E,K		06
	2	**V7585600**	Panel, AC Inlet			N		06
	3	**VV650200**	Circuit Board	FU120L		U		07
*	3	**V7601300**	Circuit Board	FU120BL		B,E,K		
	3	**VV650500**	Circuit Board	FU120L		N		08
	4	**EG330380**	Bind Head Screw	3.0X10 MFZN2BL		N	2	01
	5	**VA211900**	Hexagonal Nut	3.0 MFZN2Y		N	2	01

*: New Parts

RANK: Japan only

■ SIDE BOARD UNIT

• Top view

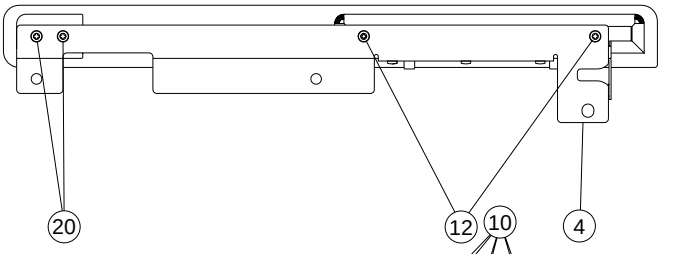

• Front view

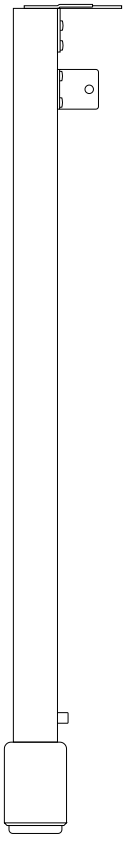

• Side view

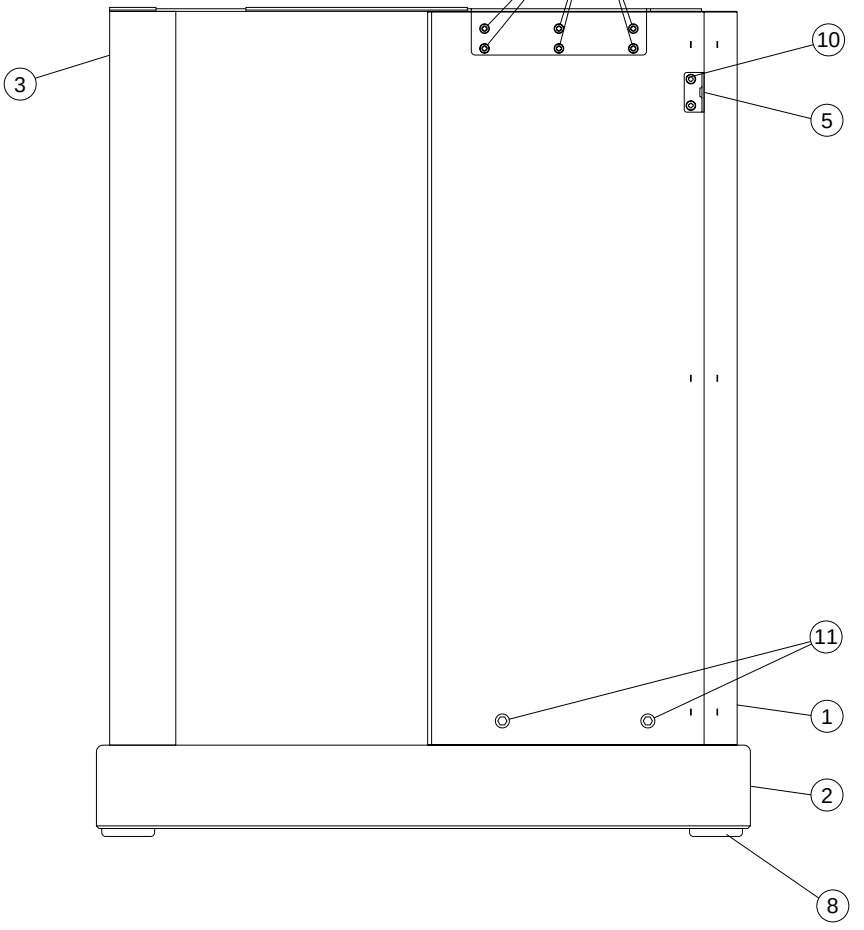

• Rear view

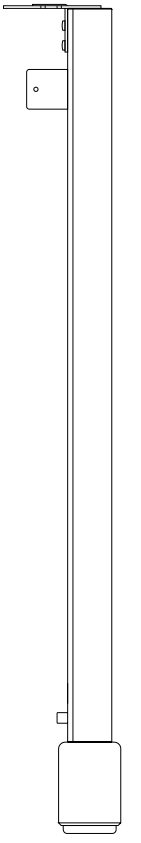

• Bottom view

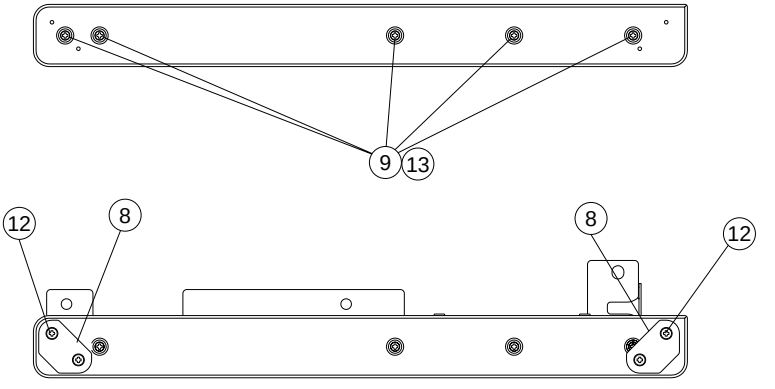

● Side Board Unit L

	REF NO.	PART NO.	DESCRIPTION			REMARKS		QTY	RANK
			SIDE BOARD UNIT L	LEFT		CLP-150/150M/150C			
*		**V8433400**	Side Board Unit L	LEFT		CLP-150			
*		**V8552000**	Side Board Unit L	LEFT		CLP-150M			
*		**V8552400**	Side Board Unit L	LEFT		CLP-150C			
	1	--	Side Board L	LEFT		CLP-150	(V843360)		
	1	--	Side Board L	LEFT		CLP-150M	(V855220)		
	1	--	Side Board L	LEFT		CLP-150C	(V855260)		
	2	--	Stand Base L	LEFT ROSE		CLP-150	(V828400)		
	2	--	Stand Base L	LEFT MAHOGANY		CLP-150M	(V855000)		
	2	--	Stand Base L	LEFT CHERRY		CLP-150C	(V855040)		
	3	--	Leg			CLP-150	(V834960)		
	3	--	Leg			CLP-150M	(V855550)		
	3	--	Leg			CLP-150C	(V855570)		
	4	--	Holder, Stand	LEFT			(V834670)		
	5	**VQ958300**	Holder, Back Board						05
	8	**CB006650**	Foot C Black					2	03
	9	**VV444000**	Pan Head Tapping Screw-1	4.0X65 MFZN2Y				5	01
	10	**EP030580**	Bind Head Tapping Screw-1	3.5X20 MFZN2BL				8	01
	11	**V5251600**	Nut	TYPE M M6XL33				2	01
	12	**EM040020**	Flat Head Tapping Screw-1	4.0X20 MFZN2BL				6	01
	13	**ET500040**	Flat Washer	4.0X10X0.8 MFZN2BL				5	01
	20	**EM040040**	Flat Head Tapping Screw-1	4.0X30 MFZN2BL				2	01

✻: New Parts RANK: Japan only

● Side Board Unit R

	REF NO.	PART NO.	DESCRIPTION			REMARKS		QTY	RANK
			SIDE BOARD UNIT R	RIGHT		CLP-150/150M/150C			
*		**V8433500**	Side Board Unit R	RIGHT		CLP-150			
*		**V8552100**	Side Board Unit R	RIGHT		CLP-150M			
*		**V8552500**	Side Board Unit R	RIGHT		CLP-150C			
	1	--	Side Board R	RIGHT		CLP-150	(V843370)		
	1	--	Side Board R	RIGHT		CLP-150M	(V855230)		
	1	--	Side Board R	RIGHT		CLP-150C	(V855270)		
	2	--	Stand Base R	RIGHT ROSE		CLP-150	(V828410)		
	2	--	Stand Base R	RIGHT MAHOGANY		CLP-150M	(V855010)		
	2	--	Stand Base R	RIGHT CHERRY		CLP-150C	(V855050)		
	3	--	Leg			CLP-150	(V834960)		
	3	--	Leg			CLP-150M	(V855550)		
	3	--	Leg			CLP-150C	(V855570)		
	4	--	Holder, Stand	RIGHT			(V834680)		
	5	**VQ958300**	Holder, Back Board						05
	8	**CB006650**	Foot C Black					2	03
	9	**VV444000**	Pan Head Tapping Screw-1	4.0X65 MFZN2Y				5	01
	10	**EP030580**	Bind Head Tapping Screw-1	3.5X20 MFZN2BL				8	01
	11	**V5251600**	Nut	TYPE M M6XL33				2	01
	12	**EM040020**	Flat Head Tapping Screw-1	4.0X20 MFZN2BL				6	01
	13	**ET500040**	Flat Washer	4.0X10X0.8 MFZN2BL				5	01
	20	**EM040040**	Flat Head Tapping Screw-1	4.0X30 MFZN2BL				2	01

✻: New Parts RANK: Japan only

■ PEDAL BOX ASSEMBLY

• **Front view**

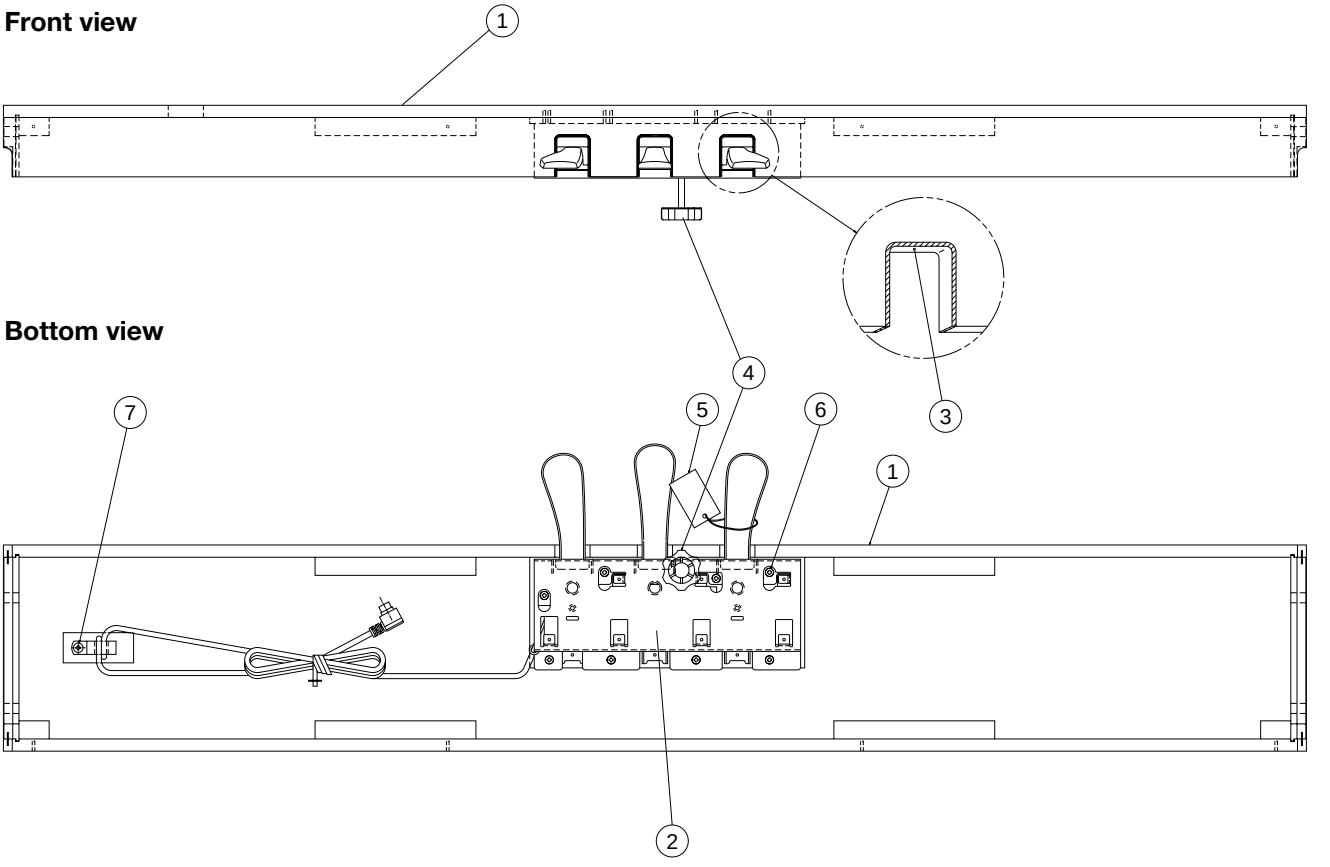

Pedal Assembly
(See page 25.)

	REF NO.	PART NO.	DESCRIPTION			REMARKS	QTY	RANK
			PEDAL BOX ASSEMBLY			CLP-150/150M/150C		
		--	Pedal Box Assembly			CLP-150 (V843380)		
		--	Pedal Box Assembly			CLP-150M (V854910)		
		--	Pedal Box Assembly			CLP-150C (V854960)		
*	1	**V8433900**	Pedal box			CLP-150		
*	1	**V8549200**	Pedal Box			CLP-150M		
*	1	**V8549700**	Pedal Box			CLP-150C		
*	2	**V8613100**	Pedal Assembly	O				
	3	**VU464300**	Felt Red	115X12X2			3	03
	4	**VU379700**	Adjuster					02
	5	**VD966100**	Caution Label	Clavinova				03
	6	**EP040230**	Bind Head Tapping Screw-1	4.0X14 MFZN2Y			8	01
	7	**EN630260**	Truss Head Tapping Screw-1	3.5X20 MFZN2Y				01

*: New Parts

RANK: Japan only

■ PEDAL ASSEMBLY

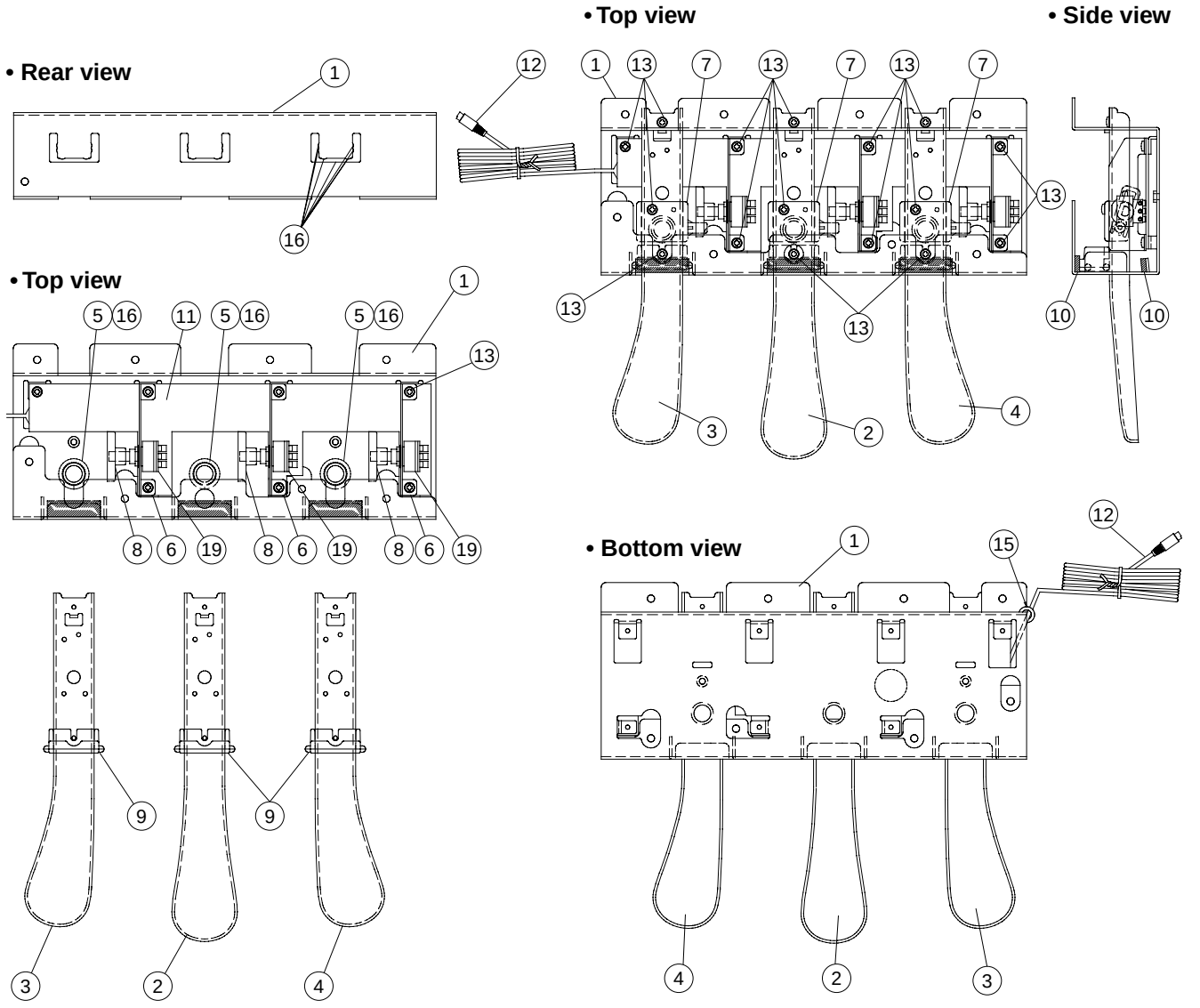

REF NO.	PART NO.	DESCRIPTION			REMARKS	QTY	RANK
*	**V8613100**	PEDAL ASSEMBLY	O		CLP-150/150M/150C		
1	**V7511700**	Pedal Frame					06
2	**VU362000**	Pedal Piece C	CENTER		Sostenuto pedal		08
3	**VU362100**	Pedal Piece L	LEFT		Left pedal		08
4	**VU362200**	Pedal Piece R	RIGHT		Damper pedal		08
5	**VP348100**	Pedal Spring				3	03
6	**V7598000**	Angle Bracket	3VR			3	
7	**VV475800**	Holder, VR	PEDAL			3	03
8	**VV476000**	Actuator, VR	PEDAL			3	03
9	**VU339800**	Shutter	PEDAL			3	03
10	**VU346500**	Felt Black	PA			6	03
11	**V7675600**	Circuit Board	PEDAL (SW)				07
12	**V0044700**	Connector Assembly	PK-LF				08
13	**EP600190**	Bind Head Tapping Screw-B	3.0X8 MFZN2BL			16	01
15	**CB069250**	Cord Holder	BK-1				01
16	**--**	Grease	G-31KA		(VE96850)		
19	**HS412520**	Rotary Variable Resistor	K161SOZO1		PEDAL VOLUME	3	05

*: New Parts

RANK: Japan only

■ KEYBOARD ASSEMBLY

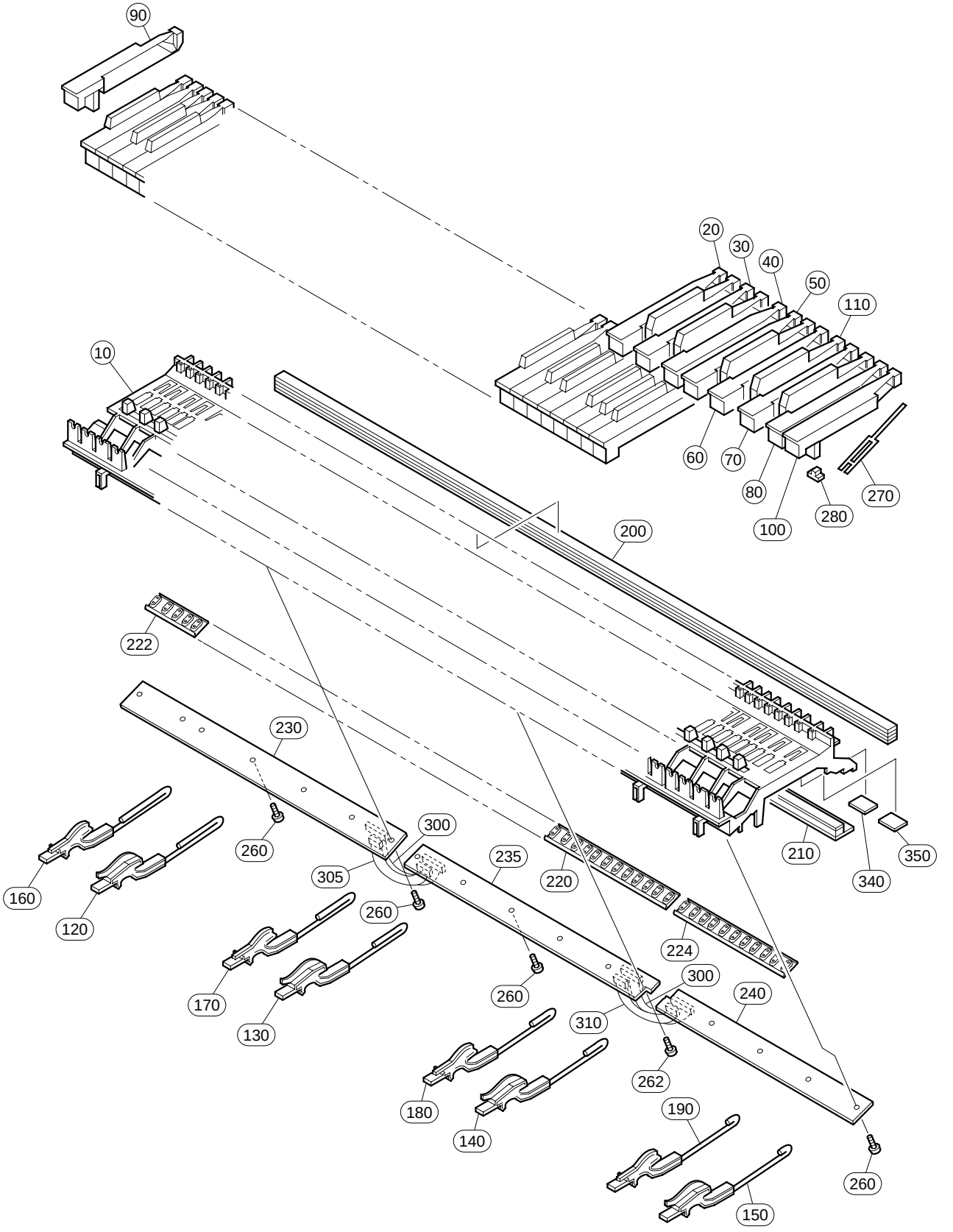

	REF NO.	PART NO.	DESCRIPTION			REMARKS	QTY	RANK
*	1	**V8278500**	KEYBOARD ASSEMBLY	GHD_EBUS A88 K6		CLP-150/150M/150C		
	10	--	MK Frame			(VU42210)		
	20	**VU101000**	White Key	C			7	05
	30	**VU101100**	White Key	D			7	05
	40	**VU101200**	White Key	E			7	05
	50	**VU101300**	White Key	F			7	05
	60	**VU101400**	White Key	G			7	05
	70	**VU101500**	White Key	A			7	05
	80	**VU101600**	White Key	B			8	05
	90	**VU101700**	White Key	A'				05
	100	**VU101800**	White Key	C'				05
	110	**VU102100**	Black Key				36	05
	120	**VY828500**	Hammer Assembly, White Key	W1 A1-F1			13	05
	130	**VY828600**	Hammer Assembly, White Key	W2 G3-E3			13	05
	140	**VY828700**	Hammer Assembly, White Key	W3 F3-D5			13	05
	150	**VY828800**	Hammer Assembly, White Key	W4 E5-C7			13	05
	160	**VY828900**	Hammer Assembly, Black Key	B1 A#1-F#1			9	05
	170	**VY829000**	Hammer Assembly, Black Key	B2 G#1-D#3			9	05
	180	**VY829100**	Hammer Assembly, Black Key	B3 F#3-C#5			9	05
	190	**VY829200**	Hammer Assembly, Black Key	B4 D#5-A#6			9	05
	200	**VU342100**	Stopper Felt	1229X12X14.8T U88				09
	210	**V7640100**	Stopper Felt	1239.5X28X10.1T				07
	220	**VY846700**	Rubber Contact	OCTAVE 12KEYS D-C#			6	08
	222	**VY846800**	Rubber Contact	OCTAVE 5KEYS A-C#		A-1~C0#		08
	224	**VY846900**	Rubber Contact	OCTAVE 11KEYS D-C		D6~C7		08
*	230	**V8514800**	Circuit Board	GHD_EBUS L				
*	235	**V8521400**	Circuit Board	GHD M				
*	240	**V8521500**	Circuit Board	GHD H				
	260	**VT413400**	Bind Head Tapping Screw-P	3.0X10 MFZN2			16	01
*	262	**V8833200**	PW Head Tapping Screw-P	3X10-10 MFC2BL				
	270	**VZ417900**	Spring	R WHITE/BLACK		}	88	03
	270	**V2798500**	Spring	R WHITE/BLACK		}	88	
	280	**VU237500**	Rubber			}	88	03
	280	**V2211300**	Rubber	2		}	88	03
	290	--	Grease	G-1006Y		(V627430)		
	300	--	Cable	12P L=106 P=2		(V852050)	2	
	305	--	Cable	9P L=106 P=2		(V776680)		
	310	--	Cable	4P L=106 P=2		(V852100)		
	340	**VV467900**	Stopper Support	A 35.5X20			7	03
	350	**VV468100**	Stopper Support	B 24X20			12	03
			JIGS					
		TX000670	Rod					

*: New Parts

RANK: Japan only

■ BENCH (BC-102DR/BC-102MH/BC-102CH)

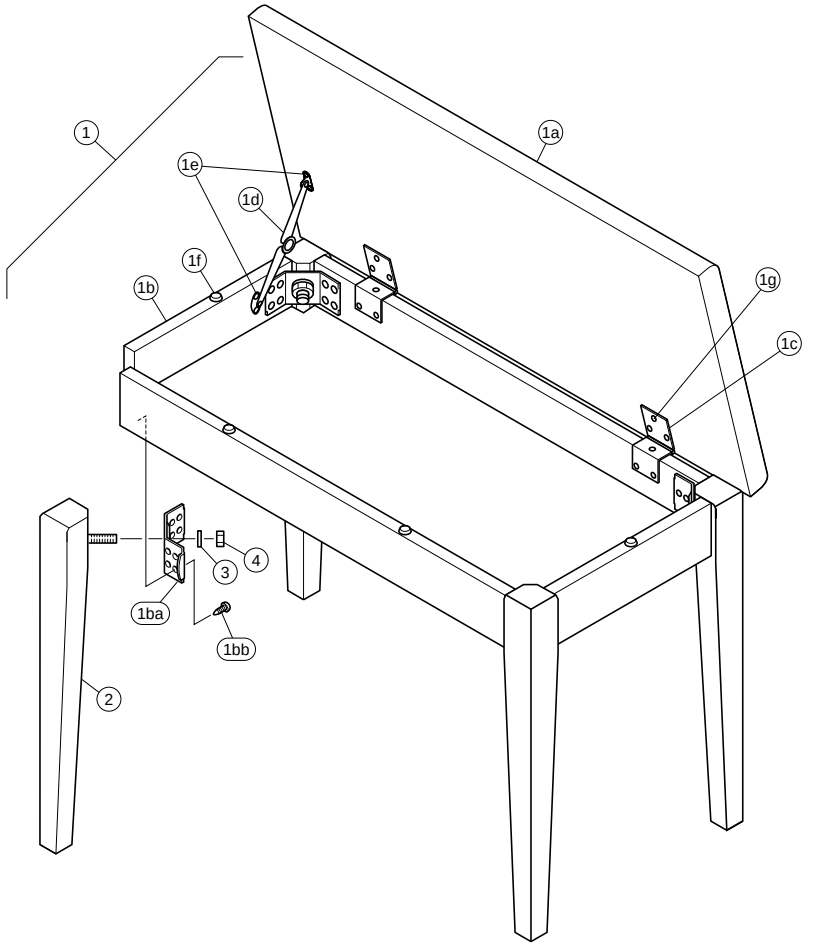

	REF NO.	PART NO.	DESCRIPTION			REMARKS			QTY	RANK
			BENCH	BC-102		CLP-150/150M/150C				
		--	Bench	BC-102DR		CLP-150	U	(V756390)		
		--	Bench	BC-102MH		CLP-150M	U	(V756400)		
		--	Bench	BC-102CH		CLP-150C	U	(V887870)		
	1	**V7695800**	Bench Board Assembly	ROSE		CLP-150				
	1	**V7695900**	Bench Board Assembly	MAHOGANY		CLP-150M				
*	1	**V8899900**	Bench Board Assembly	CHERRY		CLP-150C				
	1a	--	Bench Board Assembly			CLP-150		(V769170)		
	1a	--	Bench Board Assembly			CLP-150M		(V769180)		
	1a	--	Bench Board Assembly			CLP-150C		(V890010)		
	1b	--	Seat Support Assembly			CLP-150		(V769620)		
	1b	--	Seat Support Assembly			CLP-150M		(V769630)		
	1b	--	Seat Support Assembly			CLP-150C		(V890020)		
	1ba	**V7396200**	Holder, Leg						4	03
	1bb	**EP030260**	Bind Head Tapping Screw-1	3.5X16 MFZN2BL					32	01
	1c	**V7696900**	Hinge	2.0 1 MFZN2BL					2	05
	1d	**VB896300**	Stay	MFNZN2BL						04
	1e	**EP030250**	Bind Head Tapping Screw-1	3.5X14 MFZN2BL					4	01
	1f	--	Spacer Felt	15X15X3T BLACK				(V792090)	4	
	1g	**EM030340**	Flat Head Tapping Screw-1	3.5X14 MFZN2BL					12	01
	2	**V7692000**	Leg Assembly	ROSE		CLP-150			4	
	2	**V7692100**	Leg Assembly	MAHOGANY		CLP-150M			4	
*	2	**V8900000**	Leg Assembly	CHERRY		CLP-150C			4	
	3	**V7678600**	Spring Washer	10.0 MFZN2BL					4	
	4	**V7678700**	Hexagonal Nut	10.0X1.25 MFZN2					4	
			ACCESSORIES							
		--	Wrench					(V688680)		

*: New Parts

RANK: Japan only

■ BENCH (BC-100DR/BC100MH/BC-100CH)

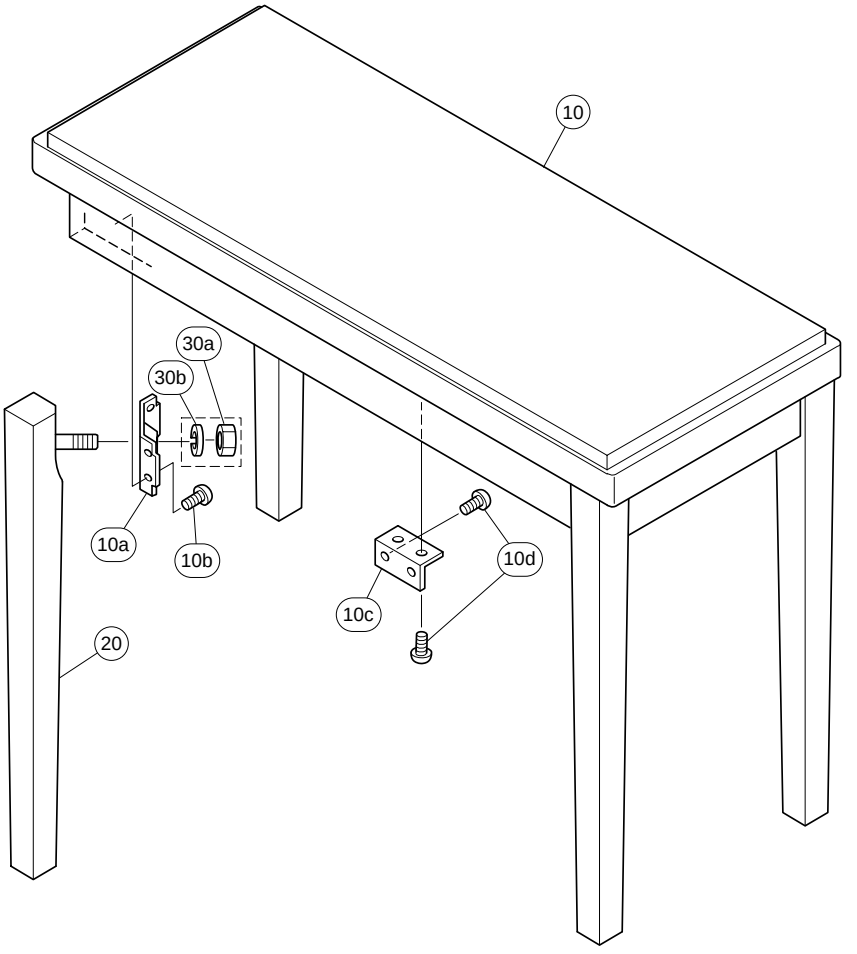

REF NO.	PART NO.	DESCRIPTION			REMARKS	QTY	RANK
		BENCH	BC-100		CLP-150/150M/150C		
	--	Bench	BC-100DR		CLP-150 N,K (V553140)		
	--	Bench	BC-100MH		CLP-150M N,K (V553150)		
	--	Bench	BC-100CH		CLP-150C N,K (V553160)		
10	**V5532900**	Bench Board Assembly	ROSE		CLP-150		16
10	**V5533000**	Bench Board Assembly	MAHOGANY		CLP-150M		15
10	**V5533100**	Bench Board Assembly	CHERRY		CLP-150C		16
10a	**AA016480**	Holder, Leg				4	02
10b	**EP030190**	Bind Head Tapping Screw-1	3.5X16 MFZN2Y			16	01
10c	**VC969300**	Holder, Bench Board				4	03
10d	**EP030170**	Bind Head Tapping Screw-1	3.5X14 MFZN2Y			16	01
20	**V8176300**	Leg Assembly	ROSE		CLP-150	4	
20	**V8176400**	Leg Assembly	MAHOGANY		CLP-150M	4	
* 20	**V8176500**	Leg Assembly	CHERRY		CLP-150C	4	
30	**VS530500**	Screw Set	BC-XX				03
30a	**03761250**	Hexagonal Nut	10.0X1.25 MFZN2			4	01
30b	**03765820**	Spring Washer	10.0 MFZN2Y			4	01
		ACCESSORIES					
	--	Wrench			(V688680)		

*: New Parts

RANK: Japan only

■ ELECTRICAL PARTS

	REF NO.	PART NO.	DESCRIPTION			REMARKS	QTY	RANK
			ELECTRICAL PARTS			CLP-150/150M/150C		
*		**V8499900**	Circuit Board	AJK		(X2246B0)		
*		**V8496500**	Circuit Board	DJK		(V849640)(X2245C0)		
*		**V8496600**	Circuit Board	PEDAL (DJK)		(V849640)(X2245C0)		
*		**V8540500**	Circuit Board	DM		(XZ592H0)		
		VV650200	Circuit Board	FU120L		U (XS882A0)		07
*		**V7601300**	Circuit Board	FU120BL		B,E,K (XS882A0)		
		VV650500	Circuit Board	FU120L		N (XS882A0)		08
*		**V8514800**	Circuit Board	GHD_EBUS L		(XZ138D0)		
		V6588200	Circuit Board	MK SUB		(XZ142B0)		10
*		**V8521500**	Circuit Board	GHD H		(X2218A0)		
*		**V8521400**	Circuit Board	GHD M		(X2217A0)		
*		**V8781900**	Circuit Board	HP		(XQ389A0,XQ390A0)		
		--	Circuit Board	MA120		U (V858380)(XQ393E0)		
		--	Circuit Board	MA120		B,E,N,K (V858390)(XQ393E0)		
		V7675600	Circuit Board	PEDAL (SW)		(X0193A0)		07
		VN637600	Circuit Board	PL (YCJ)		(XL151B0,XR898A0)		03
		VU659100	Circuit Board	PL (YMMA)		(XL151B0,XR898A0)		03
*		**V8455100**	Circuit Board	PNL		(X2243D0)		
*		**V8502800**	Circuit Board	PNR		(V850270)(X2244B0)		
*		**V8562800**	Circuit Board	MV2		(V850270)(X2244B0)		
		V2403300	Circuit Board	NET1		(XT123B0)		05
*		**V8544500**	Circuit Board	WMH		(X2248A0)		
*		**V8544400**	Circuit Board	WML		(X2248A0)		
*		**V8499900**	Circuit Board	AJK		(X2246B0)		
		--	Jumper Wire	0.55		(VA07890)		
	C0100	**UN866220**	Electrolytic Cap.-BP	2.20 50.0V				01
	C0101	**US063330**	Ceramic Capacitor-B (chip)	3300P 50V K				01
	C0102	**US062470**	Ceramic Capacitor-SL(chip)	470P 50V J				01
	C0103	**UN866470**	Electrolytic Cap.-BP	4.70 50.0V				01
	C0120	**UN866220**	Electrolytic Cap.-BP	2.20 50.0V				01
	C0121	**US063330**	Ceramic Capacitor-B (chip)	3300P 50V K				01
	C0122	**US062470**	Ceramic Capacitor-SL(chip)	470P 50V J				01
	C0123	**UN866470**	Electrolytic Cap.-BP	4.70 50.0V				01
	C0200	**US062150**	Ceramic Capacitor-SL(chip)	150P 50V J				01
	C0201	**UR866470**	Electrolytic Cap.	4.70 50.0V				01
	C0202	**US062100**	Ceramic Capacitor-SL(chip)	100P 50V J				01
	C0203	**US145100**	Ceramic Capacitor-F (chip)	0.1000 25V Z				01
	C0204	**UN838100**	Electrolytic Cap.-BP	100.00 16.0V				01
	C0205	**UN866470**	Electrolytic Cap.-BP	4.70 50.0V				01
	C0206	**US063100**	Ceramic Capacitor-B (chip)	1000P 50V K				01
	C0250	**US062150**	Ceramic Capacitor-SL(chip)	150P 50V J				01
	C0251	**UR866470**	Electrolytic Cap.	4.70 50.0V				01
	C0252	**US062100**	Ceramic Capacitor-SL(chip)	100P 50V J				01
	C0253	**US145100**	Ceramic Capacitor-F (chip)	0.1000 25V Z				01
	C0254	**UN838100**	Electrolytic Cap.-BP	100.00 16.0V				01
	C0255	**UN866470**	Electrolytic Cap.-BP	4.70 50.0V				01
	C0256	**US063100**	Ceramic Capacitor-B (chip)	1000P 50V K				01
	C0301	**UA354680**	Polyester Film Capacitor	0.0680 50V J				01
	C0302	**VR169300**	Polyester Multlay Cap.	0.56 50V J				01
	C0303	**UA354560**	Polyester Film Capacitor	0.0560 50V J				01
	C0304	**VR168500**	Polyester Multlay Cap.	0.15 50V J				01
	C0305	**UA354330**	Polyester Film Capacitor	0.0330 50V J				01
	C0306	**UA354390**	Polyester Film Capacitor	0.0390 50V J				01
	C0307	**UA354120**	Polyester Film Capacitor	0.0120 50V J				01
	C0308	**UA354820**	Polyester Film Capacitor	0.0820 50V J				01
	C0309	**UA353270**	Polyester Film Capacitor	2700P 50V J				01
	C0310	**UA354390**	Polyester Film Capacitor	0.0390 50V J				01
	C0311	**UA353390**	Polyester Film Capacitor	3900P 50V J				01
	C0312	**UA353220**	Polyester Film Capacitor	2200P 50V J				01
	C0313	**UA354120**	Polyester Film Capacitor	0.0120 50V J				01
	C0314	**UA353330**	Polyester Film Capacitor	3300P 50V J				01
	C0320	**US062470**	Ceramic Capacitor-SL(chip)	470P 50V J				01
	C0401	**UA354680**	Polyester Film Capacitor	0.0680 50V J				01
	C0402	**VR169300**	Polyester Multlay Cap.	0.56 50V J				01
	C0403	**UA354560**	Polyester Film Capacitor	0.0560 50V J				01
	C0404	**VR168500**	Polyester Multlay Cap.	0.15 50V J				01
	C0405	**UA354330**	Polyester Film Capacitor	0.0330 50V J				01
	C0406	**UA354390**	Polyester Film Capacitor	0.0390 50V J				01

*: New Parts

RANK: Japan only

REF NO.	PART NO.	DESCRIPTION			REMARKS	QTY	RANK
C0407	**UA354120**	Polyester Film Capacitor	0.0120 50V J				01
C0408	**UA354820**	Polyester Film Capacitor	0.0820 50V J				01
C0409	**UA353270**	Polyester Film Capacitor	2700P 50V J				01
C0410	**UA354390**	Polyester Film Capacitor	0.0390 50V J				01
C0411	**UA353390**	Polyester Film Capacitor	3900P 50V J				01
C0412	**UA353220**	Polyester Film Capacitor	2200P 50V J				01
C0413	**UA354120**	Polyester Film Capacitor	0.0120 50V J				01
C0414	**UA353330**	Polyester Film Capacitor	3300P 50V J				01
C0420	**US062470**	Ceramic Capacitor-SL(chip)	470P 50V J				01
C0520	**UR848220**	Electrolytic Cap.	220.00 25.0V				01
C0521	**UR848220**	Electrolytic Cap.	220.00 25.0V				01
C0530	**US064100**	Ceramic Capacitor-B (chip)	0.0100 50V K				01
C0531	**US064100**	Ceramic Capacitor-B (chip)	0.0100 50V K				01
C0600	**UN866470**	Electrolytic Cap.-BP	4.70 50.0V				01
C0601	**US063100**	Ceramic Capacitor-B (chip)	1000P 50V K				01
C0602	**US063680**	Ceramic Capacitor-B (chip)	6800P 50V K				01
C0610	**UN866470**	Electrolytic Cap.-BP	4.70 50.0V				01
C0612	**US063680**	Ceramic Capacitor-B (chip)	6800P 50V K				01
C0620	**US063100**	Ceramic Capacitor-B (chip)	1000P 50V K				01
C0640	**US063100**	Ceramic Capacitor-B (chip)	1000P 50V K				01
CN500	**VB390700**	Connector Base Post	PH 11P TE				01
CN510	**VB390400**	Connector Base Post	PH 8P TE				01
CN520	**VB390500**	Connector Base Post	PH 9P TE				03
CN530	**VB390300**	Connector Base Post	PH 7P TE				01
CN540	**LB918020**	Base Post Connector	XH 2P TE				01
D0200	**VB493900**	Diode	MA221		}		01
D0200	**VV925900**	Diode	RLS-73 TE-11		}		01
D0640	**VB493900**	Diode	MA221		}		01
D0640	**VV925900**	Diode	RLS-73 TE-11		}		01
IC100	**XF291A00**	IC	UPC4570G2		OP AMP		03
IC200	**XT131A00**	IC	LA6517M-TE-R		OP AMP		04
IC300	**XY487A00**	IC	M5229FP		EQUALIZER		03
IC400	**XY487A00**	IC	M5229FP		EQUALIZER		03
JK600	**VL080500**	Phone Jack	YKB21-5076		AUX IN (L/L+R)		02
JK610	**VS115400**	Phone Jack Black	LGR4609-7000		AUX IN (R)		01
JK620	**VL080500**	Phone Jack	YKB21-5076		AUX OUT (L/L+R)		02
JK630	**VS115400**	Phone Jack Black	LGR4609-7000		AUX OUT (R)		01
JK640	**VP599300**	Pin Jack	2P YKC21-3120		AUX OUT (LEVEL FIXED)		02
L0600	**GE300670**	Ferrite Bead	BL02RN2-R62T4				02
L0620	**GE300670**	Ferrite Bead	BL02RN2-R62T4				02
L0640	**GE300670**	Ferrite Bead	BL02RN2-R62T4				02
R0100	**RD357100**	Carbon Resistor (chip)	10K 63M J				01
R0101	**RD357100**	Carbon Resistor (chip)	10K 63M J				01
R0102	**RD356330**	Carbon Resistor (chip)	3.3K 63M J				01
R0103	**RD355100**	Carbon Resistor (chip)	100 63M J				01
R0104	**RD357330**	Carbon Resistor (chip)	33K 63M J				01
R0120	**RD357100**	Carbon Resistor (chip)	10K 63M J				01
R0121	**RD357100**	Carbon Resistor (chip)	10K 63M J				01
R0122	**RD356330**	Carbon Resistor (chip)	3.3K 63M J				01
R0123	**RD355100**	Carbon Resistor (chip)	100 63M J				01
R0124	**RD357330**	Carbon Resistor (chip)	33K 63M J				01
R0200	**RD357100**	Carbon Resistor (chip)	10K 63M J				01
R0201	**RD356470**	Carbon Resistor (chip)	4.7K 63M J				01
R0203	**RD354330**	Carbon Resistor (chip)	33 63M J				01
R0204	**RD356100**	Carbon Resistor (chip)	1.0K 63M J				01
R0250	**RD357100**	Carbon Resistor (chip)	10K 63M J				01
R0251	**RD356470**	Carbon Resistor (chip)	4.7K 63M J				01
R0253	**RD354330**	Carbon Resistor (chip)	33 63M J				01
R0254	**RD356100**	Carbon Resistor (chip)	1.0K 63M J		}		01
R0254	**RD356100**	Carbon Resistor (chip)	1.0K 63M J		}		01
R0301	**RD356150**	Carbon Resistor (chip)	1.5K 63M J				01
R0302	**RD357180**	Carbon Resistor (chip)	18K 63M J				01
R0303	**RD356220**	Carbon Resistor (chip)	2.2K 63M J				01
R0304	**RD357220**	Carbon Resistor (chip)	22K 63M J				01
R0305	**RD356180**	Carbon Resistor (chip)	1.8K 63M J				01
R0306	**RD357220**	Carbon Resistor (chip)	22K 63M J				01
R0307	**RD355820**	Carbon Resistor (chip)	820 63M J				01
R0308	**RD357180**	Carbon Resistor (chip)	18K 63M J				01
R0309	**RD355180**	Carbon Resistor (chip)	180 63M J				01
R0310	**RD357180**	Carbon Resistor (chip)	18K 63M J				01

✻: New Parts

RANK: Japan only

	REF NO.	PART NO.	DESCRIPTION			REMARKS	QTY	RANK
	R0311	**RD357180**	Carbon Resistor (chip)	18K 63M J				01
	R0312	**RD356150**	Carbon Resistor (chip)	1.5K 63M J				01
	R0313	**RD357150**	Carbon Resistor (chip)	15K 63M J				01
	R0314	**RD356470**	Carbon Resistor (chip)	4.7K 63M J				01
	R0320	**RD356330**	Carbon Resistor (chip)	3.3K 63M J				01
	R0321	**RD356470**	Carbon Resistor (chip)	4.7K 63M J				01
	R0322	**RD356560**	Carbon Resistor (chip)	5.6K 63M J				01
	R0323	**RD356270**	Carbon Resistor (chip)	2.7K 63M J				01
	R0401	**RD356150**	Carbon Resistor (chip)	1.5K 63M J				01
	R0402	**RD357180**	Carbon Resistor (chip)	18K 63M J				01
	R0403	**RD356220**	Carbon Resistor (chip)	2.2K 63M J				01
	R0404	**RD357220**	Carbon Resistor (chip)	22K 63M J				01
	R0405	**RD356180**	Carbon Resistor (chip)	1.8K 63M J				01
	R0406	**RD357220**	Carbon Resistor (chip)	22K 63M J				01
	R0407	**RD355820**	Carbon Resistor (chip)	820 63M J				01
	R0408	**RD357180**	Carbon Resistor (chip)	18K 63M J				01
	R0409	**RD355180**	Carbon Resistor (chip)	180 63M J				01
	R0410	**RD357180**	Carbon Resistor (chip)	18K 63M J				01
	R0411	**RD357180**	Carbon Resistor (chip)	18K 63M J				01
	R0412	**RD356150**	Carbon Resistor (chip)	1.5K 63M J				01
	R0413	**RD357150**	Carbon Resistor (chip)	15K 63M J				01
	R0414	**RD356470**	Carbon Resistor (chip)	4.7K 63M J				01
	R0420	**RD356330**	Carbon Resistor (chip)	3.3K 63M J				01
	R0421	**RD356470**	Carbon Resistor (chip)	4.7K 63M J				01
	R0422	**RD356560**	Carbon Resistor (chip)	5.6K 63M J				01
	R0423	**RD356270**	Carbon Resistor (chip)	2.7K 63M J				01
	R0521	**RD350000**	Carbon Resistor (chip)	0 63M J				01
	R0530	**RD350000**	Carbon Resistor (chip)	0 63M J				01
	R0531	**RD350000**	Carbon Resistor (chip)	0 63M J				01
	R0532	**RD356470**	Carbon Resistor (chip)	4.7K 63M J				01
	R0540	**RD357100**	Carbon Resistor (chip)	10K 63M J				01
	R0600	**RD356560**	Carbon Resistor (chip)	5.6K 63M J				01
	R0601	**RD356560**	Carbon Resistor (chip)	5.6K 63M J				01
	R0610	**RD356560**	Carbon Resistor (chip)	5.6K 63M J				01
	R0611	**RD356560**	Carbon Resistor (chip)	5.6K 63M J				01
	R0620	**RD356180**	Carbon Resistor (chip)	1.8K 63M J				01
	R0621	**RD356100**	Carbon Resistor (chip)	1.0K 63M J				01
	R0630	**RD356180**	Carbon Resistor (chip)	1.8K 63M J				01
	R0631	**RD356100**	Carbon Resistor (chip)	1.0K 63M J				01
	R0640	**RD355680**	Carbon Resistor (chip)	680 63M J				01
	R0650	**RD355680**	Carbon Resistor (chip)	680 63M J				01
	R0700	**RD356680**	Carbon Resistor (chip)	6.8K 63M J				01
	R0701	**RD357470**	Carbon Resistor (chip)	47K 63M J				01
	R0710	**RD356100**	Carbon Resistor (chip)	1.0K 63M J				01
	R0711	**RD357220**	Carbon Resistor (chip)	22K 63M J				01
	R0720	**RD357330**	Carbon Resistor (chip)	33K 63M J				01
	R0721	**RD357330**	Carbon Resistor (chip)	33K 63M J				01
	R0950	**RD350000**	Carbon Resistor (chip)	0 63M J				01
	-0953	**RD350000**	Carbon Resistor (chip)	0 63M J				01
*	RY200	**V8245600**	Relay	DC ATX203 12V				
*	RY640	**V8245600**	Relay	DC ATX203 12V				
	TR700	**VV556400**	Transistor	2SC2412K Q,R,S				01
	TR710	**VV556400**	Transistor	2SC2412K Q,R,S				01
	TR720	**VJ927200**	Transistor	2SA1162 O,Y				01
	TR720	**VQ395600**	Transistor	2SA1052 B,C				01
*		**V8496500**	Circuit Board	DJK		(V849640)(X2245C0)		
*		**V8496600**	Circuit Board	PEDAL (DJK)		(V849640)(X2245C0)		
	C0004	**US064100**	Ceramic Capacitor-B (chip)	0.0100 50V K				01
	C0005	**UR838100**	Electrolytic Cap.	100.00 16.0V				01
	C0006	**US064100**	Ceramic Capacitor-B (chip)	0.0100 50V K				01
	C0007	**UR838100**	Electrolytic Cap.	100.00 16.0V				01
	C0009	**US064100**	Ceramic Capacitor-B (chip)	0.0100 50V K				01
	C0012	**US064100**	Ceramic Capacitor-B (chip)	0.0100 50V K				01
	C0013	**UR837100**	Electrolytic Cap.	10.00 16.0V				01
	C0014	**UN817470**	Electrolytic Cap.-BP	47.00 6.3V				01
	C0016	**US064100**	Ceramic Capacitor-B (chip)	0.0100 50V K				01
	C0017	**US135100**	Ceramic Capacitor-F (chip)	0.1000 16V Z				01
	C0018	**US064100**	Ceramic Capacitor-B (chip)	0.0100 50V K				01
	C0019	**US064100**	Ceramic Capacitor-B (chip)	0.0100 50V K				01

*: New Parts

RANK: Japan only

REF NO.	PART NO.	DESCRIPTION			REMARKS	QTY	RANK
C0020	**UR837100**	Electrolytic Cap.	10.00 16.0V				01
C0021	**US064100**	Ceramic Capacitor-B (chip)	0.0100 50V K				01
C0035	**UR838100**	Electrolytic Cap.	100.00 16.0V				01
C0036	**US064100**	Ceramic Capacitor-B (chip)	0.0100 50V K				01
CN001	**VB389900**	Connector Base Post	PH 3P TE				01
CN005	**VB390400**	Connector Base Post	PH 8P TE				01
CN006	**VB390000**	Connector Base Post	PH 4P TE				01
CN008	**LB932020**	Base Post Connector	VH 2P TE				01
CN010	**VB390200**	Connector Base Post	PH 6P TE				01
CN011	**VB390100**	Connector Base Post	PH 5P TE				01
CN012	**V3671200**	USB Jack	USB 4P TE		USB		03
CN012	**V6802600**	USB Jack	USB 4P SE				02
D0001	**VB493900**	Diode	MA221				01
-0004	**VB493900**	Diode	MA221				01
D0001	**VV925900**	Diode	RLS-73 TE-11				01
-0004	**VV925900**	Diode	RLS-73 TE-11				01
IC001	**XI348A00**	IC	SC7SU04FEL		INVERTER		01
IC001	**XY447A00**	IC	TC7SU04F				01
IC002	**XU073A00**	IC	SN75C1168NSR		LINE DRIVER/RECEIVER		05
IC003	**VD473200**	Photo Coupler	6N137				05
JK001	**VT202500**	DIN Connector	5P YKF51-50		MIDI IN		01
JK002	**VT202500**	DIN Connector	5P YKF51-50		MIDI OUT		01
JK003	**VT202500**	DIN Connector	5P YKF51-50		MIDI THRU		01
JK004	**VV269500**	DIN Connector	DIN 8P MD-S813		TO HOST		03
JK005	**VS115400**	Phone Jack Black	LGR4609-7000		AUX PEDAL		01
JK006	**V4874800**	DIN Connector	DIN 6P MD-S613		to Pedal assembly		02
L0001	**RD350000**	Carbon Resistor (chip)	0 63M J				01
-0004	**RD350000**	Carbon Resistor (chip)	0 63M J				01
L0005	**VY657200**	Chip Inductance	600 BK1608HM601				01
L0006	**RD350000**	Carbon Resistor (chip)	0 63M J				01
L0007	**VY657200**	Chip Inductance	600 BK1608HM601				01
-0023	**VY657200**	Chip Inductance	600 BK1608HM601				01
R0001	**RD355220**	Carbon Resistor (chip)	220 63M J				01
R0002	**RD357100**	Carbon Resistor (chip)	10K 63M J				01
R0003	**RD356100**	Carbon Resistor (chip)	1.0K 63M J				01
R0006	**RD357100**	Carbon Resistor (chip)	10K 63M J				01
-0009	**RD357100**	Carbon Resistor (chip)	10K 63M J				01
R0010	**RD350000**	Carbon Resistor (chip)	0 63M J				01
R0011	**RD355100**	Carbon Resistor (chip)	100 63M J				01
R0012	**RD355100**	Carbon Resistor (chip)	100 63M J				01
R0013	**RD356100**	Carbon Resistor (chip)	1.0K 63M J				01
R0014	**RD357100**	Carbon Resistor (chip)	10K 63M J				01
R0015	**RD357100**	Carbon Resistor (chip)	10K 63M J				01
R0016	**RD356100**	Carbon Resistor (chip)	1.0K 63M J				01
R0017	**RD357100**	Carbon Resistor (chip)	10K 63M J				01
R0018	**RD355220**	Carbon Resistor (chip)	220 63M J				01
R0019	**RD355220**	Carbon Resistor (chip)	220 63M J				01
R0020	**RD357100**	Carbon Resistor (chip)	10K 63M J				01
R0021	**RD357220**	Carbon Resistor (chip)	22K 63M J				01
R0022	**RD357220**	Carbon Resistor (chip)	22K 63M J				01
R0023	**RD356150**	Carbon Resistor (chip)	1.5K 63M J				01
R0024	**RD357100**	Carbon Resistor (chip)	10K 63M J				01
R0025	**RD357100**	Carbon Resistor (chip)	10K 63M J				01
R0026	**RD357220**	Carbon Resistor (chip)	22K 63M J				01
R0027	**RD356150**	Carbon Resistor (chip)	1.5K 63M J				01
R0028	**RD357100**	Carbon Resistor (chip)	10K 63M J				01
R0029	**RD355220**	Carbon Resistor (chip)	220 63M J				01
R0030	**RD154470**	Carbon Resistor (chip)	47.0 1/4 J				01
-0033	**RD154470**	Carbon Resistor (chip)	47.0 1/4 J				01
R0034	**RD350000**	Carbon Resistor (chip)	0 63M J				01
R0035	**RD350000**	Carbon Resistor (chip)	0 63M J				01
R0100	**RD350000**	Carbon Resistor (chip)	0 63M J				01
R0200	**RD350000**	Carbon Resistor (chip)	0 63M J				01
-0203	**RD350000**	Carbon Resistor (chip)	0 63M J				01
SW001	**VQ665200**	Slide Switch	SSSF144-S06N-0		HOST SELECT		03
TR001	**VV556400**	Transistor	2SC2412K Q,R,S				01
-004	**VV556400**	Transistor	2SC2412K Q,R,S				01
*	**V8540500**	Circuit Board	DM		(XZ592H0)		
C0001	**US064100**	Ceramic Capacitor-B (chip)	0.0100 50V K				01

*: New Parts

RANK: Japan only

REF NO.	PART NO.	DESCRIPTION			REMARKS	QTY	RANK
C0002	**US062470**	Ceramic Capacitor-SL(chip)	470P 50V J				01
C0003	**US064100**	Ceramic Capacitor-B (chip)	0.0100 50V K				01
C0004	**US062470**	Ceramic Capacitor-SL(chip)	470P 50V J				01
C0005	**US064100**	Ceramic Capacitor-B (chip)	0.0100 50V K				01
C0006	**US062470**	Ceramic Capacitor-SL(chip)	470P 50V J				01
C0007	**US064100**	Ceramic Capacitor-B (chip)	0.0100 50V K				01
C0008	**US062470**	Ceramic Capacitor-SL(chip)	470P 50V J				01
C0009	**US064100**	Ceramic Capacitor-B (chip)	0.0100 50V K				01
C0010	**US062470**	Ceramic Capacitor-SL(chip)	470P 50V J				01
C0011	**US064100**	Ceramic Capacitor-B (chip)	0.0100 50V K				01
C0012	**US062470**	Ceramic Capacitor-SL(chip)	470P 50V J				01
C0013	**US064100**	Ceramic Capacitor-B (chip)	0.0100 50V K				01
C0014	**US062470**	Ceramic Capacitor-SL(chip)	470P 50V J				01
C0015	**US064100**	Ceramic Capacitor-B (chip)	0.0100 50V K				01
C0016	**US062470**	Ceramic Capacitor-SL(chip)	470P 50V J				01
C0017	**US064100**	Ceramic Capacitor-B (chip)	0.0100 50V K				01
C0018	**US062470**	Ceramic Capacitor-SL(chip)	470P 50V J				01
C0019	**US064100**	Ceramic Capacitor-B (chip)	0.0100 50V K				01
C0020	**US062470**	Ceramic Capacitor-SL(chip)	470P 50V J				01
C0021	**US064100**	Ceramic Capacitor-B (chip)	0.0100 50V K				01
C0022	**US062470**	Ceramic Capacitor-SL(chip)	470P 50V J				01
C0023	**US064100**	Ceramic Capacitor-B (chip)	0.0100 50V K				01
C0024	**US062470**	Ceramic Capacitor-SL(chip)	470P 50V J				01
C0025	**US064100**	Ceramic Capacitor-B (chip)	0.0100 50V K				01
C0026	**US062470**	Ceramic Capacitor-SL(chip)	470P 50V J				01
C0027	**US064100**	Ceramic Capacitor-B (chip)	0.0100 50V K				01
C0028	**US062470**	Ceramic Capacitor-SL(chip)	470P 50V J				01
C0029	**UF018100**	Electrolytic Cap. (chip)	100 6.3V				01
C0030	**UF018100**	Electrolytic Cap. (chip)	100 6.3V				01
C0032	**US062100**	Ceramic Capacitor-SL(chip)	100P 50V J				01
-0036	**US062100**	Ceramic Capacitor-SL(chip)	100P 50V J				01
C0037	**US135100**	Ceramic Capacitor-F (chip)	0.1000 16V Z				01
C0038	**UF037100**	Electrolytic Cap. (chip)	10 16V				01
C0039	**US135100**	Ceramic Capacitor-F (chip)	0.1000 16V Z				01
C0040	**US135100**	Ceramic Capacitor-F (chip)	0.1000 16V Z				01
C0042	**UF118220**	Electrolytic Cap. (chip)	220 6.3V UUR0J2				01
C0043	**US135100**	Ceramic Capacitor-F (chip)	0.1000 16V Z				01
C0044	**UF118220**	Electrolytic Cap. (chip)	220 6.3V UUR0J2				01
C0045	**UF138220**	Electrolytic Cap. (chip)	220 16V UUR1C2				01
C0046	**UF138220**	Electrolytic Cap. (chip)	220 16V UUR1C2				01
C0047	**US135100**	Ceramic Capacitor-F (chip)	0.1000 16V Z				01
-0051	**US135100**	Ceramic Capacitor-F (chip)	0.1000 16V Z				01
C0053	**US135100**	Ceramic Capacitor-F (chip)	0.1000 16V Z				01
C0055	**UF138220**	Electrolytic Cap. (chip)	220 16V UUR1C2				01
C0056	**UF138220**	Electrolytic Cap. (chip)	220 16V UUR1C2				01
C0058	**UF037100**	Electrolytic Cap. (chip)	10 16V				01
C0059	**US064100**	Ceramic Capacitor-B (chip)	0.0100 50V K				01
C0060	**US064100**	Ceramic Capacitor-B (chip)	0.0100 50V K				01
C0062	**US061270**	Ceramic Capacitor-CH(chip)	27P 50V J				01
C0066	**US064100**	Ceramic Capacitor-B (chip)	0.0100 50V K				01
C0067	**US061270**	Ceramic Capacitor-CH(chip)	27P 50V J				01
C0069	**UF037100**	Electrolytic Cap. (chip)	10 16V				01
C0070	**US064100**	Ceramic Capacitor-B (chip)	0.0100 50V K				01
C0071	**US062470**	Ceramic Capacitor-SL(chip)	470P 50V J				01
C0072	**US064100**	Ceramic Capacitor-B (chip)	0.0100 50V K				01
C0073	**US062470**	Ceramic Capacitor-SL(chip)	470P 50V J				01
C0074	**US064100**	Ceramic Capacitor-B (chip)	0.0100 50V K				01
C0075	**US062470**	Ceramic Capacitor-SL(chip)	470P 50V J				01
C0076	**US064100**	Ceramic Capacitor-B (chip)	0.0100 50V K				01
C0077	**US062470**	Ceramic Capacitor-SL(chip)	470P 50V J				01
C0081	**US135100**	Ceramic Capacitor-F (chip)	0.1000 16V Z				01
C0083	**US135100**	Ceramic Capacitor-F (chip)	0.1000 16V Z				01
C0085	**US064100**	Ceramic Capacitor-B (chip)	0.0100 50V K				01
C0086	**UF037100**	Electrolytic Cap. (chip)	10 16V				01
C0087	**US135100**	Ceramic Capacitor-F (chip)	0.1000 16V Z				01
C0089	**US064100**	Ceramic Capacitor-B (chip)	0.0100 50V K				01
C0090	**US062470**	Ceramic Capacitor-SL(chip)	470P 50V J				01
C0091	**US064100**	Ceramic Capacitor-B (chip)	0.0100 50V K				01
C0092	**US062470**	Ceramic Capacitor-SL(chip)	470P 50V J				01
C0093	**US064100**	Ceramic Capacitor-B (chip)	0.0100 50V K				01

✻: New Parts

RANK: Japan only

REF NO.	PART NO.	DESCRIPTION			REMARKS	QTY	RANK
C0094	**US062470**	Ceramic Capacitor-SL(chip)	470P 50V J				01
C0096	**US135100**	Ceramic Capacitor-F (chip)	0.1000 16V Z				01
C0101	**US135100**	Ceramic Capacitor-F (chip)	0.1000 16V Z				01
C0102	**US135100**	Ceramic Capacitor-F (chip)	0.1000 16V Z				01
C0104	**US135100**	Ceramic Capacitor-F (chip)	0.1000 16V Z				01
C0105	**US135100**	Ceramic Capacitor-F (chip)	0.1000 16V Z				01
C0106	**US061330**	Ceramic Capacitor-CH(chip)	33P 50V J				01
C0107	**US061330**	Ceramic Capacitor-CH(chip)	33P 50V J				01
C0108	**US135100**	Ceramic Capacitor-F (chip)	0.1000 16V Z				01
C0111	**US062470**	Ceramic Capacitor-SL(chip)	470P 50V J				01
C0112	**US064100**	Ceramic Capacitor-B (chip)	0.0100 50V K				01
C0113	**US062470**	Ceramic Capacitor-SL(chip)	470P 50V J				01
C0114	**US064100**	Ceramic Capacitor-B (chip)	0.0100 50V K				01
C0115	**US062470**	Ceramic Capacitor-SL(chip)	470P 50V J				01
C0116	**US064100**	Ceramic Capacitor-B (chip)	0.0100 50V K				01
C0117	**US062470**	Ceramic Capacitor-SL(chip)	470P 50V J				01
C0118	**US064100**	Ceramic Capacitor-B (chip)	0.0100 50V K				01
C0119	**UF037100**	Electrolytic Cap. (chip)	10 16V				01
C0120	**UF008100**	Electrolytic Cap. (chip)	100 4V				01
C0121	**US062470**	Ceramic Capacitor-SL(chip)	470P 50V J				01
C0122	**US064100**	Ceramic Capacitor-B (chip)	0.0100 50V K				01
C0123	**RD350000**	Carbon Resistor (chip)	0 63M J				01
C0124	**RD350000**	Carbon Resistor (chip)	0 63M J				01
C0125	**US062470**	Ceramic Capacitor-SL(chip)	470P 50V J				01
C0126	**RD350000**	Carbon Resistor (chip)	0 63M J				01
C0127	**US064100**	Ceramic Capacitor-B (chip)	0.0100 50V K				01
C0128	**US135100**	Ceramic Capacitor-F (chip)	0.1000 16V Z				01
-0131	**US135100**	Ceramic Capacitor-F (chip)	0.1000 16V Z				01
C0132	**US062470**	Ceramic Capacitor-SL(chip)	470P 50V J				01
C0133	**US064100**	Ceramic Capacitor-B (chip)	0.0100 50V K				01
C0134	**US062470**	Ceramic Capacitor-SL(chip)	470P 50V J				01
C0135	**US062470**	Ceramic Capacitor-SL(chip)	470P 50V J				01
C0136	**US064100**	Ceramic Capacitor-B (chip)	0.0100 50V K				01
C0137	**US064100**	Ceramic Capacitor-B (chip)	0.0100 50V K				01
C0138	**US062470**	Ceramic Capacitor-SL(chip)	470P 50V J				01
C0139	**US064100**	Ceramic Capacitor-B (chip)	0.0100 50V K				01
C0140	**US062470**	Ceramic Capacitor-SL(chip)	470P 50V J				01
C0141	**US064100**	Ceramic Capacitor-B (chip)	0.0100 50V K				01
C0142	**US064100**	Ceramic Capacitor-B (chip)	0.0100 50V K				01
C0143	**US062470**	Ceramic Capacitor-SL(chip)	470P 50V J				01
C0144	**UF037100**	Electrolytic Cap. (chip)	10 16V				01
C0145	**US062470**	Ceramic Capacitor-SL(chip)	470P 50V J				01
C0146	**US062470**	Ceramic Capacitor-SL(chip)	470P 50V J				01
C0147	**US064100**	Ceramic Capacitor-B (chip)	0.0100 50V K				01
C0148	**US062470**	Ceramic Capacitor-SL(chip)	470P 50V J				01
C0149	**US062470**	Ceramic Capacitor-SL(chip)	470P 50V J				01
C0150	**US064100**	Ceramic Capacitor-B (chip)	0.0100 50V K				01
C0151	**UF008100**	Electrolytic Cap. (chip)	100 4V				01
C0152	**US064100**	Ceramic Capacitor-B (chip)	0.0100 50V K				01
C0153	**US060300**	Ceramic Capacitor-CH(chip)	3P 50V C				01
C0154	**US061100**	Ceramic Capacitor-CH(chip)	10P 50V D				01
C0155	**US063100**	Ceramic Capacitor-B (chip)	1000P 50V K				01
C0162	**UF046470**	Electrolytic Cap. (chip)	4.7 25V				01
C0165	**UF118220**	Electrolytic Cap. (chip)	220 6.3V UUR0J2				01
C0168	**US064100**	Ceramic Capacitor-B (chip)	0.0100 50V K				01
C0169	**US062470**	Ceramic Capacitor-SL(chip)	470P 50V J				01
C0170	**US064100**	Ceramic Capacitor-B (chip)	0.0100 50V K				01
C0171	**US062470**	Ceramic Capacitor-SL(chip)	470P 50V J				01
C0172	**US062470**	Ceramic Capacitor-SL(chip)	470P 50V J				01
C0173	**US064100**	Ceramic Capacitor-B (chip)	0.0100 50V K				01
C0174	**UF037100**	Electrolytic Cap. (chip)	10 16V				01
C0175	**US064100**	Ceramic Capacitor-B (chip)	0.0100 50V K				01
C0176	**US062470**	Ceramic Capacitor-SL(chip)	470P 50V J				01
C0177	**US064100**	Ceramic Capacitor-B (chip)	0.0100 50V K				01
C0178	**US062470**	Ceramic Capacitor-SL(chip)	470P 50V J				01
C0179	**US062470**	Ceramic Capacitor-SL(chip)	470P 50V J				01
C0180	**US064100**	Ceramic Capacitor-B (chip)	0.0100 50V K				01
C0181	**UF037100**	Electrolytic Cap. (chip)	10 16V				01
C0187	**US064100**	Ceramic Capacitor-B (chip)	0.0100 50V K				01
C0188	**US062470**	Ceramic Capacitor-SL(chip)	470P 50V J				01

✻: New Parts

RANK: Japan only

	REF NO.	PART NO.	DESCRIPTION			REMARKS	QTY	RANK
	C0189	**US064100**	Ceramic Capacitor-B (chip)	0.0100 50V K				01
	C0190	**US062470**	Ceramic Capacitor-SL(chip)	470P 50V J				01
	C0191	**US064100**	Ceramic Capacitor-B (chip)	0.0100 50V K				01
	C0192	**US062470**	Ceramic Capacitor-SL(chip)	470P 50V J				01
	C0193	**US064100**	Ceramic Capacitor-B (chip)	0.0100 50V K				01
	C0194	**US062470**	Ceramic Capacitor-SL(chip)	470P 50V J				01
	C0200	**US135100**	Ceramic Capacitor-F (chip)	0.1000 16V Z				01
	C0202	**UF037100**	Electrolytic Cap. (chip)	10 16V				01
	C0205	**US064100**	Ceramic Capacitor-B (chip)	0.0100 50V K				01
	C0206	**UF037100**	Electrolytic Cap. (chip)	10 16V				01
	C0207	**UF037100**	Electrolytic Cap. (chip)	10 16V				01
	C0208	**US135100**	Ceramic Capacitor-F (chip)	0.1000 16V Z				01
	-0210	**US135100**	Ceramic Capacitor-F (chip)	0.1000 16V Z				01
	C0219	**UF037100**	Electrolytic Cap. (chip)	10 16V				01
	C0224	**UF037100**	Electrolytic Cap. (chip)	10 16V				01
	C0225	**UF037100**	Electrolytic Cap. (chip)	10 16V				01
	C0226	**UF018100**	Electrolytic Cap. (chip)	100 6.3V				01
	C0230	**US064100**	Ceramic Capacitor-B (chip)	0.0100 50V K				01
	C0231	**US064100**	Ceramic Capacitor-B (chip)	0.0100 50V K				01
	C0234	**US135100**	Ceramic Capacitor-F (chip)	0.1000 16V Z				01
	C0239	**UF037100**	Electrolytic Cap. (chip)	10 16V				01
	C0240	**UF037100**	Electrolytic Cap. (chip)	10 16V				01
	C0241	**US135100**	Ceramic Capacitor-F (chip)	0.1000 16V Z				01
	-0243	**US135100**	Ceramic Capacitor-F (chip)	0.1000 16V Z				01
	C0244	**UF018100**	Electrolytic Cap. (chip)	100 6.3V				01
	C0245	**UF008220**	Electrolytic Cap. (chip)	220 4V				01
	C0246	**US064100**	Ceramic Capacitor-B (chip)	0.0100 50V K				01
	C0250	**US063220**	Ceramic Capacitor-B (chip)	2200P 50V K				01
	-0253	**US063220**	Ceramic Capacitor-B (chip)	2200P 50V K				01
	C0258	**UF046470**	Electrolytic Cap. (chip)	4.7 25V				01
	C0259	**US063820**	Ceramic Capacitor-B (chip)	8200P 50V K				01
	C0260	**US063820**	Ceramic Capacitor-B (chip)	8200P 50V K				01
	C0265	**US063180**	Ceramic Capacitor-B (chip)	1800P 50V K				01
	-0268	**US063180**	Ceramic Capacitor-B (chip)	1800P 50V K				01
	C0276	**UF037100**	Electrolytic Cap. (chip)	10 16V				01
	C0285	**US064100**	Ceramic Capacitor-B (chip)	0.0100 50V K				01
	C0286	**US064100**	Ceramic Capacitor-B (chip)	0.0100 50V K				01
	C0321	**US064100**	Ceramic Capacitor-B (chip)	0.0100 50V K				01
	C0327	**US064100**	Ceramic Capacitor-B (chip)	0.0100 50V K				01
	C0328	**US064100**	Ceramic Capacitor-B (chip)	0.0100 50V K				01
	CN001	**VB390500**	Connector Base Post	PH 9P TE				03
	CN002	**VB390400**	Connector Base Post	PH 8P TE				01
	CN003	**VB390400**	Connector Base Post	PH 8P TE				01
	CN004	**VB390300**	Connector Base Post	PH 7P TE				01
	CN005	**VB389900**	Connector Base Post	PH 3P TE				01
	CN006	**VB390100**	Connector Base Post	PH 5P TE				01
	CN007	**VB390000**	Connector Base Post	PH 4P TE				01
	CN008	**LB932020**	Base Post Connector	VH 2P TE				01
	CN009	**LB918020**	Base Post Connector	XH 2P TE				01
*	CN014	**V8389000**	Connector	55091 60P TE				
*	CN015	**V8389000**	Connector	55091 60P TE				
	CN024	**VB390700**	Connector Base Post	PH 11P TE				01
	D0001	**VV925900**	Diode	RLS-73 TE-11				01
	D0002	**VS201100**	Diode	D1F60				01
	-0005	**VS201100**	Diode	D1F60				01
	EM001	**VD542700**	LC Filter	DSS306-93F223Z1				01
	EM002	**VD542700**	LC Filter	DSS306-93F223Z1				01
	EM004	**VD542700**	LC Filter	DSS306-93F223Z1				01
	EM005	**VD542700**	LC Filter	DSS306-93F223Z1				01
	EM007	**VD542700**	LC Filter	DSS306-93F223Z1				01
	EM008	**VD542700**	LC Filter	DSS306-93F223Z1				01
*	IC002	**X2156A00**	IC	M66291GP		USB CONTROLLER		
	IC003	**X0176A00**	IC	W986432DH-7		SDRAM 64M		15
	IC003	**X0493A00**	IC	K4S643232E-TC60000				
	IC006	**XV890A00**	IC	TC74VHC14FT		INVERTER		02
	IC007	**XY945A00**	IC	TC74VHC32FT		OR		01
	IC007	**X0299A00**	IC	74VHC32MTCX				01
	IC009	**XT744A00**	IC	TC74VHCT245AFT		TRANSCEIVER		07
	IC009	**X0295A00**	IC	74VHCT245AMTCX				03
	IC010	**XT744A00**	IC	TC74VHCT245AFT		TRANSCEIVER		07

✻: New Parts

RANK: Japan only

	REF NO.	PART NO.	DESCRIPTION			REMARKS	QTY	RANK
	IC010	**X0295A00**	IC	74VHCT245AMTCX				03
*	IC012	**X0060A00**	IC	T8F02TB-0102		SWP50		
	IC013	**XY364A00**	IC	TC7WH32FU(TE12L)		OR		01
*	IC014	**X2687A00**	IC	HD6417709SHF200		CPU		
	IC022	**XZ414B00**	IC	W986416DH-7		DRAM 64M		
	IC022	**X2760A00**	IC	K4S641632F-TC75				
	IC023	**XZ414B00**	IC	W986416DH-7		DRAM 64M		
	IC023	**X2760A00**	IC	K4S641632F-TC75				
*	IC029	**X2077A00**	IC	PCM1730E-1/2K		DAC		
	IC030	**X2539200**	IC			MASK ROM 64M MAIN		08
	IC032	**XV492A00**	IC	UPC2905T-E1		REGULATOR +5V		03
	IC032	**XW674A00**	IC	NJM7805DL1A(TE1)				02
	IC033	**XF291A00**	IC	UPC4570G2		OP AMP		03
	-035	**XF291A00**	IC	UPC4570G2		OP AMP		03
*	IC036	**X0609A00**	IC	LMS8117AMP-ADJ		REGULATOR		
*	IC038	**X0609A00**	IC	LMS8117AMP-ADJ		REGULATOR		
	IC039	**XZ642A00**	IC	TAR5S33		REGULATOR +3.3V		
*	IC040	**XZ216A00**	IC	MBM29LV160BE90TN-K		FLASH ROM 16M		
*	L0001	**V8901200**	Chip Solid Inductance	BLM21PG221SN1D				
	L0002	**RD250000**	Carbon Resistor (chip)	0.0 0.0 J				01
	L0003	**RD250000**	Carbon Resistor (chip)	0.0 0.0 J				01
*	L0004	**V8901200**	Chip Solid Inductance	BLM21PG221SN1D				
	L0005	**VR579900**	Chip Inductance	BK2125HS601-T				01
	-0009	**VR579900**	Chip Inductance	BK2125HS601-T				01
	L0012	**VR579900**	Chip Inductance	BK2125HS601-T				01
	-0032	**VR579900**	Chip Inductance	BK2125HS601-T				01
	R0003	**RD350000**	Carbon Resistor (chip)	0 63M J				01
	R0004	**RD350000**	Carbon Resistor (chip)	0 63M J				01
	R0005	**RD354330**	Carbon Resistor (chip)	33 63M J				01
	-0007	**RD354330**	Carbon Resistor (chip)	33 63M J				01
	R0008	**RD357100**	Carbon Resistor (chip)	10K 63M J				01
	R0009	**RD356100**	Carbon Resistor (chip)	1.0K 63M J				01
	R0010	**RD356100**	Carbon Resistor (chip)	1.0K 63M J				01
	R0011	**RD356150**	Carbon Resistor (chip)	1.5K 63M J				01
*	R0012	**RD354270**	Carbon Resistor (chip)	27 63M J				
*	-0017	**RD354270**	Carbon Resistor (chip)	27 63M J				
	R0019	**RD357100**	Carbon Resistor (chip)	10K 63M J				01
	-0021	**RD357100**	Carbon Resistor (chip)	10K 63M J				01
	R0022	**RD356120**	Carbon Resistor (chip)	1.2K 63M J				01
	R0023	**RD359100**	Carbon Resistor (chip)	1.0M 63M J				01
	R0030	**RD357100**	Carbon Resistor (chip)	10K 63M J				01
*	R0042	**V2747000**	Chip Inductance	BLM18PG600SN1				
	R0043	**RD354680**	Carbon Resistor (chip)	68 63M J				01
	R0044	**RD354680**	Carbon Resistor (chip)	68 63M J				01
	R0050	**RD359100**	Carbon Resistor (chip)	1.0M 63M J				01
	R0052	**RD354680**	Carbon Resistor (chip)	68 63M J				01
	R0055	**RD355560**	Carbon Resistor (chip)	560 63M J				01
	R0065	**RD357100**	Carbon Resistor (chip)	10K 63M J				01
	R0066	**RD354680**	Carbon Resistor (chip)	68 63M J				01
	R0067	**RD357100**	Carbon Resistor (chip)	10K 63M J				01
	R0069	**RD354680**	Carbon Resistor (chip)	68 63M J				01
	R0070	**RD357100**	Carbon Resistor (chip)	10K 63M J				01
	R0071	**RD354680**	Carbon Resistor (chip)	68 63M J				01
	R0072	**RD354680**	Carbon Resistor (chip)	68 63M J				01
	R0073	**RD357100**	Carbon Resistor (chip)	10K 63M J				01
	R0074	**RD357100**	Carbon Resistor (chip)	10K 63M J				01
	R0076	**RD354680**	Carbon Resistor (chip)	68 63M J				01
	R0083	**RD354680**	Carbon Resistor (chip)	68 63M J				01
	R0087	**RD358470**	Carbon Resistor (chip)	470K 63M J				01
	R0089	**RD358470**	Carbon Resistor (chip)	470K 63M J				01
	R0092	**RD358470**	Carbon Resistor (chip)	470K 63M J				01
	R0093	**RD358470**	Carbon Resistor (chip)	470K 63M J				01
	R0095	**RD358470**	Carbon Resistor (chip)	470K 63M J				01
	R0099	**RD356100**	Carbon Resistor (chip)	1.0K 63M J				01
	-0102	**RD356100**	Carbon Resistor (chip)	1.0K 63M J				01
	R0103	**RD357100**	Carbon Resistor (chip)	10K 63M J				01
	-0105	**RD357100**	Carbon Resistor (chip)	10K 63M J				01
	R0106	**RD350000**	Carbon Resistor (chip)	0 63M J				01
	-0119	**RD350000**	Carbon Resistor (chip)	0 63M J				01
	R0121	**RD354680**	Carbon Resistor (chip)	68 63M J				01

✻: New Parts

RANK: Japan only

REF NO.	PART NO.	DESCRIPTION			REMARKS	QTY	RANK
R0122	**RD354680**	Carbon Resistor (chip)	68 63M J				01
R0123	**RD357100**	Carbon Resistor (chip)	10K 63M J				01
R0128	**RD357100**	Carbon Resistor (chip)	10K 63M J				01
R0129	**RD354680**	Carbon Resistor (chip)	68 63M J				01
R0130	**RD357100**	Carbon Resistor (chip)	10K 63M J				01
R0131	**RD354680**	Carbon Resistor (chip)	68 63M J				01
R0132	**RD354680**	Carbon Resistor (chip)	68 63M J				01
R0133	**RD357100**	Carbon Resistor (chip)	10K 63M J				01
R0134	**RD357100**	Carbon Resistor (chip)	10K 63M J				01
R0136	**RD354680**	Carbon Resistor (chip)	68 63M J				01
R0138	**RD357100**	Carbon Resistor (chip)	10K 63M J				01
R0139	**RD354680**	Carbon Resistor (chip)	68 63M J				01
R0140	**RD357100**	Carbon Resistor (chip)	10K 63M J				01
R0141	**RD356100**	Carbon Resistor (chip)	1.0K 63M J				01
R0142	**RD354680**	Carbon Resistor (chip)	68 63M J				01
R0143	**RD357470**	Carbon Resistor (chip)	47K 63M J				01
R0144	**RD357100**	Carbon Resistor (chip)	10K 63M J				01
R0146	**RD354680**	Carbon Resistor (chip)	68 63M J				01
R0148	**RD357100**	Carbon Resistor (chip)	10K 63M J				01
R0149	**RD354680**	Carbon Resistor (chip)	68 63M J				01
R0150	**RD354680**	Carbon Resistor (chip)	68 63M J				01
R0151	**RD357100**	Carbon Resistor (chip)	10K 63M J				01
R0152	**RD357100**	Carbon Resistor (chip)	10K 63M J				01
R0153	**RD354680**	Carbon Resistor (chip)	68 63M J				01
R0156	**RD357100**	Carbon Resistor (chip)	10K 63M J				01
R0157	**RD354560**	Carbon Resistor (chip)	56 63M J				01
R0158	**RD354680**	Carbon Resistor (chip)	68 63M J				01
R0159	**RD357100**	Carbon Resistor (chip)	10K 63M J				01
R0160	**RD357100**	Carbon Resistor (chip)	10K 63M J				01
R0161	**RD354680**	Carbon Resistor (chip)	68 63M J				01
R0162	**RD357100**	Carbon Resistor (chip)	10K 63M J				01
R0163	**RD354680**	Carbon Resistor (chip)	68 63M J				01
R0164	**RD357100**	Carbon Resistor (chip)	10K 63M J				01
R0165	**RD354680**	Carbon Resistor (chip)	68 63M J				01
R0166	**RD354680**	Carbon Resistor (chip)	68 63M J				01
R0167	**RD357100**	Carbon Resistor (chip)	10K 63M J				01
R0168	**RD354680**	Carbon Resistor (chip)	68 63M J				01
R0169	**RD357100**	Carbon Resistor (chip)	10K 63M J				01
R0170	**RD354680**	Carbon Resistor (chip)	68 63M J				01
R0171	**RD357100**	Carbon Resistor (chip)	10K 63M J				01
R0173	**RD357100**	Carbon Resistor (chip)	10K 63M J				01
R0174	**RD355100**	Carbon Resistor (chip)	100 63M J				01
-0176	**RD355100**	Carbon Resistor (chip)	100 63M J				01
R0177	**RD355220**	Carbon Resistor (chip)	220 63M J				01
R0178	**RD357100**	Carbon Resistor (chip)	10K 63M J				01
R0179	**RD357100**	Carbon Resistor (chip)	10K 63M J				01
R0180	**RD358470**	Carbon Resistor (chip)	470K 63M J				01
R0181	**RD355330**	Carbon Resistor (chip)	330 63M J				01
R0182	**RD357100**	Carbon Resistor (chip)	10K 63M J				01
R0183	**RD358470**	Carbon Resistor (chip)	470K 63M J				01
R0184	**RD357100**	Carbon Resistor (chip)	10K 63M J				01
R0185	**RD356100**	Carbon Resistor (chip)	1.0K 63M J				01
R0186	**RD356100**	Carbon Resistor (chip)	1.0K 63M J				01
R0189	**RD354680**	Carbon Resistor (chip)	68 63M J				01
-0192	**RD354680**	Carbon Resistor (chip)	68 63M J				01
R0193	**RD356100**	Carbon Resistor (chip)	1.0K 63M J				01
R0194	**RD357100**	Carbon Resistor (chip)	10K 63M J				01
R0195	**RD357220**	Carbon Resistor (chip)	22K 63M J				01
R0196	**RD358120**	Carbon Resistor (chip)	120K 63M J				01
R0197	**RD355100**	Carbon Resistor (chip)	100 63M J				01
R0198	**RD355100**	Carbon Resistor (chip)	100 63M J				01
R0199	**RD356100**	Carbon Resistor (chip)	1.0K 63M J				01
R0200	**RD359100**	Carbon Resistor (chip)	1.0M 63M J				01
R0201	**RD357100**	Carbon Resistor (chip)	10K 63M J				01
-0204	**RD357100**	Carbon Resistor (chip)	10K 63M J				01
R0206	**RD357100**	Carbon Resistor (chip)	10K 63M J				01
-0211	**RD357100**	Carbon Resistor (chip)	10K 63M J				01
R0216	**RD350000**	Carbon Resistor (chip)	0 63M J				01
R0217	**RD350000**	Carbon Resistor (chip)	0 63M J				01
R0223	**RD357100**	Carbon Resistor (chip)	10K 63M J				01

✻: New Parts

RANK: Japan only

	REF NO.	PART NO.	DESCRIPTION			REMARKS		QTY	RANK
	R0224	**RD350000**	Carbon Resistor (chip)	0 63M J					01
	R0226	**RD350000**	Carbon Resistor (chip)	0 63M J					01
	R0230	**RD354680**	Carbon Resistor (chip)	68 63M J					01
	R0232	**RD356100**	Carbon Resistor (chip)	1.0K 63M J					01
	R0233	**RD357150**	Carbon Resistor (chip)	15K 63M J					01
	R0234	**RD356820**	Carbon Resistor (chip)	8.2K 63M J					01
	R0235	**RD355220**	Carbon Resistor (chip)	220 63M J					01
	R0236	**RD356120**	Carbon Resistor (chip)	1.2K 63M J					01
	R0237	**RD356470**	Carbon Resistor (chip)	4.7K 63M J					01
	R0238	**RD356100**	Carbon Resistor (chip)	1.0K 63M J					01
	R0239	**RD356270**	Carbon Resistor (chip)	2.7K 63M J					01
	R0249	**RD356180**	Carbon Resistor (chip)	1.8K 63M J					01
	-0252	**RD356180**	Carbon Resistor (chip)	1.8K 63M J					01
	R0259	**RD356220**	Carbon Resistor (chip)	2.2K 63M J					01
	-0262	**RD356220**	Carbon Resistor (chip)	2.2K 63M J					01
	R0273	**RD356220**	Carbon Resistor (chip)	2.2K 63M J					01
	R0274	**RD356220**	Carbon Resistor (chip)	2.2K 63M J					01
	R0276	**RD356220**	Carbon Resistor (chip)	2.2K 63M J					01
	R0277	**RD355390**	Carbon Resistor (chip)	390 63M J					01
	R0278	**RD355390**	Carbon Resistor (chip)	390 63M J					01
	R0279	**RD356220**	Carbon Resistor (chip)	2.2K 63M J					01
	R0280	**RD355390**	Carbon Resistor (chip)	390 63M J					01
	R0281	**RD355390**	Carbon Resistor (chip)	390 63M J					01
	R0285	**RD350000**	Carbon Resistor (chip)	0 63M J					01
	R0296	**RD356100**	Carbon Resistor (chip)	1.0K 63M J					01
	R0297	**RD356100**	Carbon Resistor (chip)	1.0K 63M J					01
	R0337	**RD355100**	Carbon Resistor (chip)	100 63M J					01
	-0339	**RD355100**	Carbon Resistor (chip)	100 63M J					01
	RA001	**RE047100**	Resistor Array	10KX4					01
	RA002	**RE044680**	Resistor Array	68X4					01
	-004	**RE044680**	Resistor Array	68X4					01
	RA005	**RE047100**	Resistor Array	10KX4					01
	RA006	**RE047100**	Resistor Array	10KX4					01
	RA009	**RE047100**	Resistor Array	10KX4					01
	RA010	**RE047100**	Resistor Array	10KX4					01
	RA012	**RE047100**	Resistor Array	10KX4					01
	RA013	**RE044680**	Resistor Array	68X4					01
	-026	**RE044680**	Resistor Array	68X4					01
	RA027	**RE047100**	Resistor Array	10KX4					01
	RA028	**RE044680**	Resistor Array	68X4					01
	RA029	**RE044680**	Resistor Array	68X4					01
	RA030	**RE047100**	Resistor Array	10KX4					01
	-032	**RE047100**	Resistor Array	10KX4					01
	SW001	**V3026900**	Jumper Wire	CHS-01 TA1					02
	TR001	**VV925400**	Transistor	2SC2SC2712 GR					01
	-003	**VV925400**	Transistor	2SC2SC2712 GR					01
	TR004	**VJ927200**	Transistor	2SA1162 O,Y					01
	X0001	**V4093500**	Quartz Crystal Unit	6MHz SMD-49					03
	X0003	**VP864800**	Quartz Crystal Unit	11.2896MHz SMD-49					04
	X0005	**VP864900**	Quartz Crystal Unit	16MHz SMD-49					04
		VV650200	Circuit Board	FU120L		U	(XS882A0)		07
		V7601300	Circuit Board	FU120BL		B,E,K	(XS882A0)		
		VV650500	Circuit Board	FU120L		N	(XS882A0)		08
		VT139600	Voltage Selector	M1684-E		N			04
⚠		**VT308100**	AC Inlet	2P CCT9302-0101M		B,E,N,K			02
⚠		**VT308200**	AC Inlet	CCT9302-0201		U			02
		LB201530	Fuse Holder	PC-FH1		U,B,E,K		2	01
		LB201530	Fuse Holder	PC-FH1		N		6	01
		--	Jumper Wire	0.55			(VD04170)		
⚠	C0001	**VY675000**	Capacitor	0.010 250V J.U.C.S					01
⚠	C0002	**VY675100**	Capacitor	4700P 250V J.U.C.S					01
⚠	C0003	**VY675100**	Capacitor	4700P 250V J.U.C.S					01
	CN001	**LB932030**	Base Post Connector	VH 3P TE					01
	CN002	**LB932060**	Base Post Connector	VH 6P TE					01
⚠	F0001	**KB003630**	Fuse	5.00A JU		U,N			01
⚠	F0001	**KB003080**	Fuse	2.50A S		B,E,K			01
⚠	F0002	**KB003080**	Fuse	2.50A S		N			01
⚠	F0003	**KB003080**	Fuse	2.50A S		N			01
	J0001	--	Jumper Wire	0.55		U,B,E,K	(VD04170)		

✻: New Parts

RANK: Japan only

	REF NO.	PART NO.	DESCRIPTION		REMARKS	QTY	RANK
	L0001	--	Jumper Wire	0.55	U,B,E,N,K (VD04170)		
	L0003	VF790900	Coil	SU10V-D20010 10uH			03
*		V8514800	Circuit Board	GHD_EBUS L	(XZ138D0)		
		V6588200	Circuit Board	MK SUB			10
		--	Nonwoven Fabric Cloth		(VU45960)		
		VB390300	Connector Base Post	PH 7P TE			01
		VK025300	Wire Trap	52147 9P TE			01
		VK025600	Wire Trap	52147 12P TE			01
		VB941200	Diode	1SS133,1SS176			01
	C	UI527470	Electrolytic Cap.	47.00 10.0V			01
	C2	VF611200	Monolithic Ceramic Cap.	0.100 50V Z			02
	J	--	Jumper Wire	0.55	(VA07890)		
	J7	--	Jumper Wire	0.55	(VA07890)		
		V6588200	Circuit Board	MK SUB	(XZ142B0)		10
	C0001	US135100	Ceramic Capacitor-F (chip)	0.1000 16V Z			01
	-0004	US135100	Ceramic Capacitor-F (chip)	0.1000 16V Z			01
	C0005	US063100	Ceramic Capacitor-CH(chip)	1000P 50V K			01
	CN001	V6954300	Connector	11 PFA105-122A01			03
	CN003	V6954400	Connector	11 PFA105-242A01			03
	IC001	X0031100	IC	UPD780031AYGK-N02	LKS		05
	L0001	VR243700	Chip Inductance	56U LEM2520 T 560J			01
	R0001	RD357100	Carbon Resistor (chip)	10K 63M J			01
	R0005	RD356100	Carbon Resistor (chip)	1.0K 63M J			01
	R0006	RD354470	Carbon Resistor (chip)	47 63M J			01
	-0008	RD354470	Carbon Resistor (chip)	47 63M J			01
	RA001	RE047100	Resistor Array	10KX4			01
	-004	RE047100	Resistor Array	10KX4			01
	X0001	V6150500	Ceramic Resonator	8.38MHZ EFOS8384E5			01
*		V8521500	Circuit Board	GHD H	(X2218A0)		
		--	Nonwoven Fabric Cloth		(V852160)		
		VK024800	Wire Trap	52147 4P TE			01
		VK025600	Wire Trap	52147 12P TE			01
		VB941200	Diode	1SS133,1SS176			01
	J	--	Jumper Wire	0.55	(VA07890)		
*		V8521400	Circuit Board	GHD M	(X2217A0)		
		--	Nonwoven Fabric Cloth		(V846990)		
		VK024800	Wire Trap	52147 4P TE			01
		VK025300	Wire Trap	52147 9P TE			01
		VK025600	Wire Trap	52147 12P TE			01
		VB941200	Diode	1SS133,1SS176			01
	J	--	Jumper Wire	0.55	(VA07890)		
*		V8781900	Circuit Board	HP	(XQ389A0,XQ390A0)		
	C0001	FG644100	Ceramic Capacitor-B	0.01 50V Z			01
	-0005	FG644100	Ceramic Capacitor-B	0.01 50V Z			01
	C0006	--	Jumper Wire	0.55	(VD04170)		
	C0007	--	Jumper Wire	0.55	(VD04170)		
	CN001	VB858600	Connector Base Post	PH 7P SE			01
	CN002	VB858100	Connector Base Post	PH 2P SE			01
	FL001	VB971100	Coil	FL5R200QN 20uH			01
	-006	VB971100	Coil	FL5R200QN 20uH			01
	FL001	VB835000	Coil	FL5R200QNT 20uH			01
	-006	VB835000	Coil	FL5R200QNT 20uH			01
	HP001	LB101870	Phone Jack	YKB21-5006	PHONES		03
	HP002	LB101870	Phone Jack	YKB21-5006	PHONES		03
	R0001	V9295000	Carbon Resistor	33.0 1/2 J			
	-0004	V9295000	Carbon Resistor	33.0 1/2 J			
	R0005	--	Jumper Wire	0.55	(VD04170)		
	WH001	VT890700	Earth Wire	L=150mm			01
		--	Circuit Board	MA120	U (V858380)(XQ393E0)		
		--	Circuit Board	MA120	B,E,N,K (V858390)(XQ393E0)		
		VT443500	Support, PCB	T=8			03
		VT740000	Support, PCB	3T-9 T=9		3	03
		VP206500	Fuse Holder	EYF-52BC		6	01
		VJ834500	Insulation Sheet	#1000			03

*: New Parts

RANK: Japan only

	REF NO.	PART NO.	DESCRIPTION			REMARKS	QTY	RANK
		--	Jumper Wire	0.55		(VD04170)		
	C0001	**VA302600**	Ceramic Capacitor-E	0.0100 500V P				01
	C0002	**VA302600**	Ceramic Capacitor-E	0.0100 500V P				01
⚠	C0003	**VU642700**	Electrolytic Cap.	4700 16.0V				03
⚠	C0003	**V0069900**	Electrolytic Cap.	4700 16.0V				
⚠	C0004	**VU642700**	Electrolytic Cap.	4700 16.0V				03
⚠	C0004	**V0069900**	Electrolytic Cap.	4700 16.0V				
⚠	C0005	**VL232200**	Electrolytic Cap.	3300 50.0V				04
⚠	-0008	**VL232200**	Electrolytic Cap.	3300 50.0V				04
⚠	C0005	**VY715200**	Electrolytic Cap.	3300 50.0V				04
⚠	-0008	**VY715200**	Electrolytic Cap.	3300 50.0V				04
	C0009	**VN701200**	Electrolytic Cap.	1.00 50.0V PR				01
	-0011	**VN701200**	Electrolytic Cap.	1.00 50.0V PR				01
	C0012	**FG613100**	Ceramic Capacitor-B	1000P 50V K				01
	C0013	**VJ762900**	Electrolytic Cap.	100.00 16.0V PR				01
	C0014	**VL232300**	Electrolytic Cap.	2200 25.0V				03
	C0014	**VY861100**	Electrolytic Cap.	2200 25.0V				03
	C0015	**VL232300**	Electrolytic Cap.	2200 25.0V				03
	C0015	**VY861100**	Electrolytic Cap.	2200 25.0V				03
	C0016	**VN701200**	Electrolytic Cap.	1.00 50.0V PR				01
	C0017	**VC694800**	Semiconductive Cera. Cap.	0.1000 25V Z				01
	C0018	**VN701200**	Electrolytic Cap.	1.00 50.0V PR				01
	C0019	**VN701200**	Electrolytic Cap.	1.00 50.0V PR				01
	C0020	**VY715600**	Electrolytic Cap.	100.00 50.0V				
	C0020	**VT888400**	Electrolytic Cap.	100 50.0V				01
	C0021	**VY715600**	Electrolytic Cap.	100.00 50.0V				
	C0021	**VT888400**	Electrolytic Cap.	100 50.0V				01
	C0022	**FG613100**	Ceramic Capacitor-B	1000P 50V K				01
	C0023	**VN701200**	Electrolytic Cap.	1.00 50.0V PR				01
	C0024	**VJ762900**	Electrolytic Cap.	100.00 16.0V PR				01
	C0025	**VC694800**	Semiconductive Cera. Cap.	0.1000 25V Z				01
	C0026	**VC694800**	Semiconductive Cera. Cap.	0.1000 25V Z				01
	C0027	**FG613100**	Ceramic Capacitor-B	1000P 50V K				01
	C0028	**VN701200**	Electrolytic Cap.	1.00 50.0V PR				01
	C0029	**VJ762900**	Electrolytic Cap.	100.00 16.0V PR				01
	C0030	**VC694800**	Semiconductive Cera. Cap.	0.1000 25V Z				01
	C0031	**VC694800**	Semiconductive Cera. Cap.	0.1000 25V Z				01
	C0032	**VJ762900**	Electrolytic Cap.	100.00 16.0V PR				01
	C0033	**VN701400**	Electrolytic Cap.	3.30 50.0V PR				01
	CN001	**LB932080**	Base Post Connector	VH 8P TE				01
	CN003	**LB918030**	Base Post Connector	XH 3P TE				01
	CN004	**VB390300**	Connector Base Post	PH 7P TE				01
	CN005	**LB932040**	Base Post Connector	VH 4P TE				01
	CN006	**VB390500**	Connector Base Post	PH 9P TE				03
	D0001	**VB481900**	Diode	11ES4				01
	-0005	**VB481900**	Diode	11ES4				01
	D0001	**V7803100**	Diode	1T4-T/A52				
	-0005	**V7803100**	Diode	1T4-T/A52				
	D0001	**V9362200**	Diode	1T4-T/A26				
	-0005	**V9362200**	Diode	1T4-T/A26				
⚠	DB001	**VK421800**	Diode Stack	D5SBA20 6.0A 200V				03
⚠	DB002	**VQ111500**	Diode Stack	D3SBA20-4103 4.0A				03
⚠	DB003	**VR253700**	Diode Stack	S1NB20 1.0A 200V				02
⚠	F0001	**KB003630**	Fuse	5.00A JU		U		01
⚠	-0003	**KB003630**	Fuse	5.00A JU		U		01
⚠	F0001	**KB003240**	Fuse	5.00A S		B,E,N,K		01
⚠	-0003	**KB003240**	Fuse	5.00A S		B,E,N,K		01
	IC001	**XQ437A00**	IC	SI-3051N		REGULATOR +5V		03
	IC002	**XQ667A00**	IC	M5237L		REGULATOR +5V		02
	IC003	**XJ602A00**	IC	NJM78M12FA		REGULATOR +12V 0.5A		02
	IC004	**XD343A00**	IC	NJM79M12FA		REGULATOR -12V		03
	IC005	**XQ374A00**	IC	STK401-090		POWER AMP.		09
	R0001	**VU253100**	Fuse Resistor	0.47 1/2 J				01
	R0002	**VU253100**	Fuse Resistor	0.47 1/2 J				01
	R0003	**HF756100**	Carbon Resistor	1.0K 1/4 J				01
	R0004	**HF755220**	Carbon Resistor	220.0 1/4 J				01
	R0005	**HF754560**	Carbon Resistor	56.0 1/4 J				01
	R0006	**HF756560**	Carbon Resistor	5.6K 1/4 J				01
	R0007	**HF756330**	Carbon Resistor	3.3K 1/4 J				01
	R0008	**HW095100**	Fuse Resistor	100.0 1/4 J				01

✻: New Parts

RANK: Japan only

REF NO.	PART NO.	DESCRIPTION			REMARKS	QTY	RANK
R0009	**HW095100**	Fuse Resistor	100.0 1/4 J				01
R0010	**HF755560**	Carbon Resistor	560.0 1/4 J				01
R0011	**HF757100**	Carbon Resistor	10.0K 1/4 J				01
R0012	**HF755390**	Carbon Resistor	390.0 1/4 J				01
R0013	**HF757100**	Carbon Resistor	10.0K 1/4 J				01
R0014	**VC742500**	Metal Oxide Film Resistor	10.0 1W J				01
R0015	**HF757100**	Carbon Resistor	10.0K 1/4 J				01
R0016	**HF755560**	Carbon Resistor	560.0 1/4 J				01
R0017	**HF757100**	Carbon Resistor	10.0K 1/4 J				01
R0018	**HF755390**	Carbon Resistor	390.0 1/4 J				01
R0019	**HF757100**	Carbon Resistor	10.0K 1/4 J				01
R0020	**VC742500**	Metal Oxide Film Resistor	10.0 1W J				01
R0021	**HF757100**	Carbon Resistor	10.0K 1/4 J				01
R0022	**HF756330**	Carbon Resistor	3.3K 1/4 J				01
R0023	**HF756330**	Carbon Resistor	3.3K 1/4 J				01
RY001	**VK881200**	Relay	DC G5Z-2A-YA 12V				04
TR001	**VJ828100**	Transistor	2SA1451A-O/Y O.Y				04
TR002	**IC1815M0**	Transistor	2SC1815 Y,GR				01
-004	**IC1815M0**	Transistor	2SC1815 Y,GR				01
	V7675600	Circuit Board	PEDAL (SW)		(X0193A0)		07
CN001	**VB858500**	Connector Base Post	PH 6P SE				01
J	**--**	Jumper Wire	0.55		(VD04170)		
	VN637600	Circuit Board	PL (YCJ)		(XL151B0,XR898A0)		03
	VU659100	Circuit Board	PL (YMMA)		(XL151B0,XR898A0)		03
	VB858100	Connector Base Post	PH 2P SE				01
	VD180000	LED Red	SLZ-190B-03		POWER indicator		01
*	**V8455100**	Circuit Board	PNL		(X2243D0)		
C0031	**US064100**	Ceramic Capacitor-B (chip)	0.0100 50V K				01
C0032	**RD350000**	Carbon Resistor (chip)	0 63M J				01
C0034	**US064100**	Ceramic Capacitor-B (chip)	0.0100 50V K				01
C0035	**UM378100**	Electrolytic Cap.	100.00 10.0V				01
C0036	**US064100**	Ceramic Capacitor-B (chip)	0.0100 50V K				01
C0037	**UM378100**	Electrolytic Cap.	100.00 10.0V				01
C0041	**US064100**	Ceramic Capacitor-B (chip)	0.0100 50V K				01
C0042	**UM378100**	Electrolytic Cap.	100.00 10.0V				01
C0051	**US062470**	Ceramic Capacitor-SL(chip)	470P 50V J				01
-0056	**US062470**	Ceramic Capacitor-SL(chip)	470P 50V J				01
C0060	**VV020100**	Electrolytic Cap.	220.00 10.0V				01
C0061	**US062470**	Ceramic Capacitor-SL(chip)	470P 50V J				01
-0068	**US062470**	Ceramic Capacitor-SL(chip)	470P 50V J				01
C0069	**US064100**	Ceramic Capacitor-B (chip)	0.0100 50V K				01
C0071	**RD358470**	Carbon Resistor (chip)	470K 63M J				01
-0074	**RD358470**	Carbon Resistor (chip)	470K 63M J				01
C0102	**US061680**	Ceramic Capacitor-SL(chip)	68P 50V J				01
C0103	**US061680**	Ceramic Capacitor-SL(chip)	68P 50V J				01
C0105	**US064100**	Ceramic Capacitor-B (chip)	0.0100 50V K				01
C0106	**VV020100**	Electrolytic Cap.	220.00 10.0V				01
C0107	**US064100**	Ceramic Capacitor-B (chip)	0.0100 50V K				01
C0108	**RD350000**	Carbon Resistor (chip)	0 63M J				01
C0109	**RD350000**	Carbon Resistor (chip)	0 63M J				01
C0119	**US063100**	Ceramic Capacitor-B (chip)	1000P 50V K				01
C0200	**US064100**	Ceramic Capacitor-B (chip)	0.0100 50V K				01
C0201	**US064100**	Ceramic Capacitor-B (chip)	0.0100 50V K				01
CN070	**VB389600**	Connector Base Post	PH 11P SE				01
CN080	**VB858800**	Connector Base Post	PH 9P SE				01
CN101	**VB858600**	Connector Base Post	PH 7P SE				01
D0030	**VB493900**	Diode	MA221				01
-0032	**VB493900**	Diode	MA221				01
D0040	**VB493900**	Diode	MA221				01
-0047	**VB493900**	Diode	MA221				01
D0050	**VB493900**	Diode	MA221				01
-0057	**VB493900**	Diode	MA221				01
D0101	**VB493900**	Diode	MA221				01
-0107	**VB493900**	Diode	MA221				01
D0114	**VB493900**	Diode	MA221				01
D0115	**VB493900**	Diode	MA221				01
IC010	**XZ916100**	IC	UPD780031AYGK-N01-9ET		LED DRIVER/SWITCH SCAN.		05

*: New Parts

RANK: Japan only

	REF NO.	PART NO.	DESCRIPTION			REMARKS	QTY	RANK
*	IC071	**V8074800**	FET	MCH6616-TL				
*	IC072	**V8074800**	FET	MCH6616-TL				
	IC073	**XF291A00**	IC	UPC4570G2		OP AMP		03
	LD050	**VU067800**	LED	SEL6210S-TP5		METRONOME START/STOP		01
	LD052	**VU067800**	LED	SEL6210S-TP5		SONG START/STOP		01
	LD053	**VU067800**	LED	SEL6210S-TP5		REC		01
	LD061	**V8066800**	LED	SML72423CTP15		TRACK 1		01
	LD062	**V8066800**	LED	SML72423CTP15		TRACK 2		01
	LD063	**V8066800**	LED	SML72423CTP15		EXTRA TRACKS		01
	L0101	**GE901870**	Coil	SN3-205B 10uH				03
	L0108	**VY657200**	Chip Inductance	600 BK1608HM601				01
	-0110	**VY657200**	Chip Inductance	600 BK1608HM601				01
	R0031	**RD356100**	Carbon Resistor (chip)	1.0K 63M J				01
	R0051	**RD357100**	Carbon Resistor (chip)	10K 63M J				01
	-0056	**RD357100**	Carbon Resistor (chip)	10K 63M J				01
	R0061	**RD155100**	Carbon Resistor (chip)	100.0 1/4 J				01
	-0066	**RD155100**	Carbon Resistor (chip)	100.0 1/4 J				01
	R0067	**RD154470**	Carbon Resistor (chip)	47.0 1/4 J				01
	R0068	**RD155100**	Carbon Resistor (chip)	100.0 1/4 J				01
	R0070	**RD357100**	Carbon Resistor (chip)	10K 63M J				01
	-0080	**RD357100**	Carbon Resistor (chip)	10K 63M J				01
	R0081	**RD354470**	Carbon Resistor (chip)	47 63M J				01
	-0084	**RD354470**	Carbon Resistor (chip)	47 63M J				01
	R0101	**RD356100**	Carbon Resistor (chip)	1.0K 63M J				01
	R0102	**RD354470**	Carbon Resistor (chip)	47 63M J				01
	R0103	**RD354470**	Carbon Resistor (chip)	47 63M J				01
	R0104	**RD355100**	Carbon Resistor (chip)	100 63M J				01
	R0105	**VI197400**	Metal Film Resistor (chip)	10.0K 1/10 D				01
	R0106	**VI197400**	Metal Film Resistor (chip)	10.0K 1/10 D				01
	SW030	**VV439800**	Tact Switch	SKQNAJ		SONG SELECT >>		01
	SW031	**VV439800**	Tact Switch	SKQNAJ		SONG SELECT <<		01
	SW032	**VV439800**	Tact Switch	SKQNAJ		DEMO		01
	SW040	**VV439800**	Tact Switch	SKQNAJ		TOP		01
	SW041	**VV439800**	Tact Switch	SKQNAJ		TRACK 1		01
	SW042	**VV439800**	Tact Switch	SKQNAJ		TRACK 2		01
	SW043	**VV439800**	Tact Switch	SKQNAJ		EXTRA TRACKS		01
	SW044	**VV439800**	Tact Switch	SKQNAJ		REC		01
	SW045	**VV439800**	Tact Switch	SKQNAJ		SONG START/STOP		01
	SW046	**VV439800**	Tact Switch	SKQNAJ		FILE		01
	SW047	**VV439800**	Tact Switch	SKQNAJ		SONG SETTING		01
	SW050	**VV439800**	Tact Switch	SKQNAJ		METRONOME START/STOP		01
	SW051	**VV439800**	Tact Switch	SKQNAJ		METRONOME SETTING		01
	SW052	**VV439800**	Tact Switch	SKQNAJ		LCD A -		01
	SW053	**VV439800**	Tact Switch	SKQNAJ		LCD A +		01
	SW054	**VV439800**	Tact Switch	SKQNAJ		LCD C +		01
	SW055	**VV439800**	Tact Switch	SKQNAJ		LCD C -		01
	SW056	**VV439800**	Tact Switch	SKQNAJ		TEMPO UP		01
	SW057	**VV439800**	Tact Switch	SKQNAJ		TEMPO DOWN		01
	TA060	**VT943400**	Transistor Array	TD62785F(TP1)				04
*	VR030	**V8576200**	Slide Variable Resistor	B10.0K RS30111D9		SONG BALANCE		
	X0010	**V6091100**	Ceramic Resonator	8.38M EFOMC8384T4				01
*		**V8502800**	Circuit Board	PNR		(V850270)(X2244B0)		
		--	Jumper Wire	0.55		(VD04170)		
	C0091	**UM378100**	Electrolytic Cap.	100.00 10.0V				01
	C0092	**VC694800**	Semiconductive Cera. Cap.	0.1000 25V Z				01
	CN071	**VB389600**	Connector Base Post	PH 11P SE				01
	CN081	**VB858800**	Connector Base Post	PH 9P SE				01
	CN091	**VB858800**	Connector Base Post	PH 9P SE				01
	CN092	**VB858700**	Connector Base Post	PH 8P SE				01
	CN093	**V5492000**	FFC Connector	52807 16P SE				01
	D0000	**VB941200**	Diode	1SS133,1SS176				01
	-0002	**VB941200**	Diode	1SS133,1SS176				01
	D0000	**VD631600**	Diode	1SS133,176,HSS104				01
	-0002	**VD631600**	Diode	1SS133,176,HSS104				01
	D0004	**VB941200**	Diode	1SS133,1SS176				01
	-0008	**VB941200**	Diode	1SS133,1SS176				01
	D0004	**VD631600**	Diode	1SS133,176,HSS104				01
	-0008	**VD631600**	Diode	1SS133,176,HSS104				01
	D0010	**VB941200**	Diode	1SS133,1SS176				01

✻: New Parts

RANK: Japan only

REF NO.	PART NO.	DESCRIPTION			REMARKS	QTY	RANK
-0013	**VB941200**	Diode	1SS133,1SS176				01
D0010	**VD631600**	Diode	1SS133,176,HSS104				01
-0013	**VD631600**	Diode	1SS133,176,HSS104				01
D0015	**VB941200**	Diode	1SS133,1SS176				01
-0018	**VB941200**	Diode	1SS133,1SS176				01
D0015	**VD631600**	Diode	1SS133,176,HSS104				01
-0018	**VD631600**	Diode	1SS133,176,HSS104				01
D0020	**VB941200**	Diode	1SS133,1SS176				01
-0028	**VB941200**	Diode	1SS133,1SS176				01
D0020	**VD631600**	Diode	1SS133,176,HSS104				01
-0028	**VD631600**	Diode	1SS133,176,HSS104				01
D0033	**VB941200**	Diode	1SS133,1SS176				01
-0038	**VB941200**	Diode	1SS133,1SS176				01
D0033	**VD631600**	Diode	1SS133,176,HSS104				01
-0038	**VD631600**	Diode	1SS133,176,HSS104				01
LD000	**VU067800**	LED	SEL6210S-TP5		SPLIT		01
LD001	**VU067800**	LED	SEL6210S-TP5		REVERB		01
LD002	**VU067800**	LED	SEL6210S-TP5		CHORUS		01
LD010	**VU067800**	LED	SEL6210S-TP5		GUITAR		01
LD011	**VU067800**	LED	SEL6210S-TP5		XG		01
LD012	**VU067800**	LED	SEL6210S-TP5		E.BASS		01
LD013	**VU067800**	LED	SEL6210S-TP5		VIBRAPHONE		01
LD020	**VU067800**	LED	SEL6210S-TP5		HARPSICHORD		01
LD021	**VU067800**	LED	SEL6210S-TP5		SYNTH.PAD		01
LD022	**VU067800**	LED	SEL6210S-TP5		WOOD BASS		01
LD023	**VU067800**	LED	SEL6210S-TP5		E.CLAVICHORD		01
LD030	**VU067800**	LED	SEL6210S-TP5		E.PIANO 1		01
LD031	**VU067800**	LED	SEL6210S-TP5		STRINGS		01
LD032	**VU067800**	LED	SEL6210S-TP5		CHOIR		01
LD033	**VU067800**	LED	SEL6210S-TP5		E.PIANO 2		01
LD040	**VU067800**	LED	SEL6210S-TP5		GRAND PIANO 1		01
LD041	**VU067800**	LED	SEL6210S-TP5		CHURCH ORGAN		01
LD042	**VU067800**	LED	SEL6210S-TP5		JAZZ ORGAN		01
LD043	**VU067800**	LED	SEL6210S-TP5		GRAND PIANO 2		01
R0090	**HF756100**	Carbon Resistor	1.0K 1/4 J				01
R0091	**HF756820**	Carbon Resistor	8.2K 1/4 J				01
R0092	**HF757270**	Carbon Resistor	27.0K 1/4 J				01
R0093	**HF756100**	Carbon Resistor	1.0K 1/4 J				01
R0094	**HF757270**	Carbon Resistor	27.0K 1/4 J				01
R0095	**HF756100**	Carbon Resistor	1.0K 1/4 J				01
SW000	**VV439800**	Tact Switch	SKQNAJ		SPLIT		01
SW001	**VV439800**	Tact Switch	SKQNAJ		REVERB		01
SW002	**VV439800**	Tact Switch	SKQNAJ		CHORUS		01
SW004	**VV439800**	Tact Switch	SKQNAJ		MIDI SETTING		01
SW005	**VV439800**	Tact Switch	SKQNAJ		OTHER SETTING		01
SW006	**VV439800**	Tact Switch	SKQNAJ		BRILLIANCE BRIGHT		01
SW007	**VV439800**	Tact Switch	SKQNAJ		BRILLIANCE MELLOW		01
SW008	**VV439800**	Tact Switch	SKQNAJ		VARIATION UP		01
SW010	**VV439800**	Tact Switch	SKQNAJ		GUITAR		01
SW011	**VV439800**	Tact Switch	SKQNAJ		XG		01
SW012	**VV439800**	Tact Switch	SKQNAJ		E.BASS		01
SW013	**VV439800**	Tact Switch	SKQNAJ		VIBRAPHONE		01
SW015	**VV439800**	Tact Switch	SKQNAJ		WOOD BASS		01
SW016	**VV439800**	Tact Switch	SKQNAJ		E.CLAVICHORD		01
SW017	**VV439800**	Tact Switch	SKQNAJ		VOICE SETTING		01
SW018	**VV439800**	Tact Switch	SKQNAJ		VARIATION DOWN		01
SW020	**VV439800**	Tact Switch	SKQNAJ		HARPSICHORD		01
SW021	**VV439800**	Tact Switch	SKQNAJ		SYNTH.PAD		01
SW022	**VV439800**	Tact Switch	SKQNAJ		CHOIR		01
SW023	**VV439800**	Tact Switch	SKQNAJ		E.PIANO 2		01
SW024	**VV439800**	Tact Switch	SKQNAJ		E.PIANO 1		01
SW025	**VV439800**	Tact Switch	SKQNAJ		STRINGS		01
SW026	**VV439800**	Tact Switch	SKQNAJ		JAZZ ORGAN		01
SW027	**VV439800**	Tact Switch	SKQNAJ		GRAND PIANO 2		01
SW028	**VV439800**	Tact Switch	SKQNAJ		GRAND PIANO 1		01
SW033	**VV439800**	Tact Switch	SKQNAJ		LCD D -		01
SW034	**VV439800**	Tact Switch	SKQNAJ		LCD B -		01
SW035	**VV439800**	Tact Switch	SKQNAJ		LCD B +		01
SW036	**VV439800**	Tact Switch	SKQNAJ		LCD D +		01
SW037	**VV439800**	Tact Switch	SKQNAJ		EDIT		01

✻: New Parts

RANK: Japan only

	REF NO.	PART NO.	DESCRIPTION			REMARKS	QTY	RANK
	SW038	**VV439800**	Tact Switch	SKQNAJ		CHURCH ORGAN		01
	TR091	**IC174020**	Transistor	2SC1740S R,S				01
	TR092	**IC174020**	Transistor	2SC1740S R,S				01
	TR093	**VP872600**	Transistor	2SA1708 S,T				01
	VR090	**VS368200**	Rotary Variable Resistor	B10K RK09K1130BN7A		CONTRAST		01
*		**V8562800**	Circuit Board	MV2		(V850270)(X2244B0)		
		--	Jumper Wire	0.55		(VD04170)		
	CN020	**VB858700**	Connector Base Post	PH 8P SE				01
*	VR020	**V8590000**	Rotary Variable Resistor	B 10.0K XV0141GN		MASTER VOLUME		
		V2403300	Circuit Board	NET1		(XT123B0)		05
		--	Jumper Wire	0.55		(VD04170)		
	C0001	**VS677200**	Electrolytic Cap.-BP	1.50UF 63.0V				01
	C0002	**VS677200**	Electrolytic Cap.-BP	1.50UF 63.0V				01
	CN001	**LB932040**	Base Post Connector	VH 4P TE				01
	CN002	**LB932080**	Base Post Connector	VH 8P TE				01
*		**V8544500**	Circuit Board	WMH		(X2248A0)		
*	CN001	**V8389100**	Connector	52901 60P TE				
	C0001	**US064100**	Ceramic Capacitor-B (chip)	0.0100 50V K				01
	C0003	**US135100**	Ceramic Capacitor-F (chip)	0.1000 16V Z				01
	C0005	**US064100**	Ceramic Capacitor-B (chip)	0.0100 50V K				01
	C0007	**US135100**	Ceramic Capacitor-F (chip)	0.1000 16V Z				01
	C0017	**UF018100**	Electrolytic Cap. (chip)	100 6.3V				01
*	IC002	**X2563100**	IC			ROM 128M WAVE-H1		
*	IC004	**X2543100**	IC			ROM 64M WAVE-H2		
*		**V8544400**	Circuit Board	WML		(X2248A0)		
*	CN001	**V8389100**	Connector	52901 60P TE				
	C0001	**US064100**	Ceramic Capacitor-B (chip)	0.0100 50V K				01
	C0003	**US135100**	Ceramic Capacitor-F (chip)	0.1000 16V Z				01
	C0005	**US064100**	Ceramic Capacitor-B (chip)	0.0100 50V K				01
	C0007	**US135100**	Ceramic Capacitor-F (chip)	0.1000 16V Z				01
	C0017	**UF018100**	Electrolytic Cap. (chip)	100 6.3V				01
*	IC002	**X2561100**	IC			ROM 128M WAVE-L1		
*	IC004	**X2541100**	IC			ROM 64M WAVE-L2		
⚠		**VT015800**	AC Cord Set	U 2P 2.44m 7A		U		06
⚠		**VT016000**	AC Cord Set	B 2P 2.5m		B		08
⚠		**VT015900**	AC Cord Set	E 2P 2.5m		E,N		05
⚠		**V8911300**	AC Cord Set	K 2P 2.5m		K		
		VK726100	Connector	CCT5902		N		05
⚠		**XQ426A00**	Power Transformer	29WP244 U		U		13
⚠		**XQ427B00**	Power Transformer	GA-120 E IEC65		B,E,K		14
⚠		**XQ428B00**	Power Transformer	GA-120 N		N		16
*		**V8811300**	LCD	SCLCMDYAMS0049				
*		**X2566A00**	Speaker	16.0cm 8 ohm 60W		WOOFER	2	
		XL455A00	Speaker	5.0cm 16 ohm 60W		TWEETER	2	07
⚠		**VC843500**	Push Switch	SDDLB1216A J.U.C.S		POWER		03
		HS412520	Rotary Variable Resistor	K161SOZO1		PEDAL VOLUME	3	05

✻: New Parts

RANK: Japan only

■ CLP-150/CLP-150M/CLP-150C OVERALL CIRCUIT BOARD 1/4 (DM)

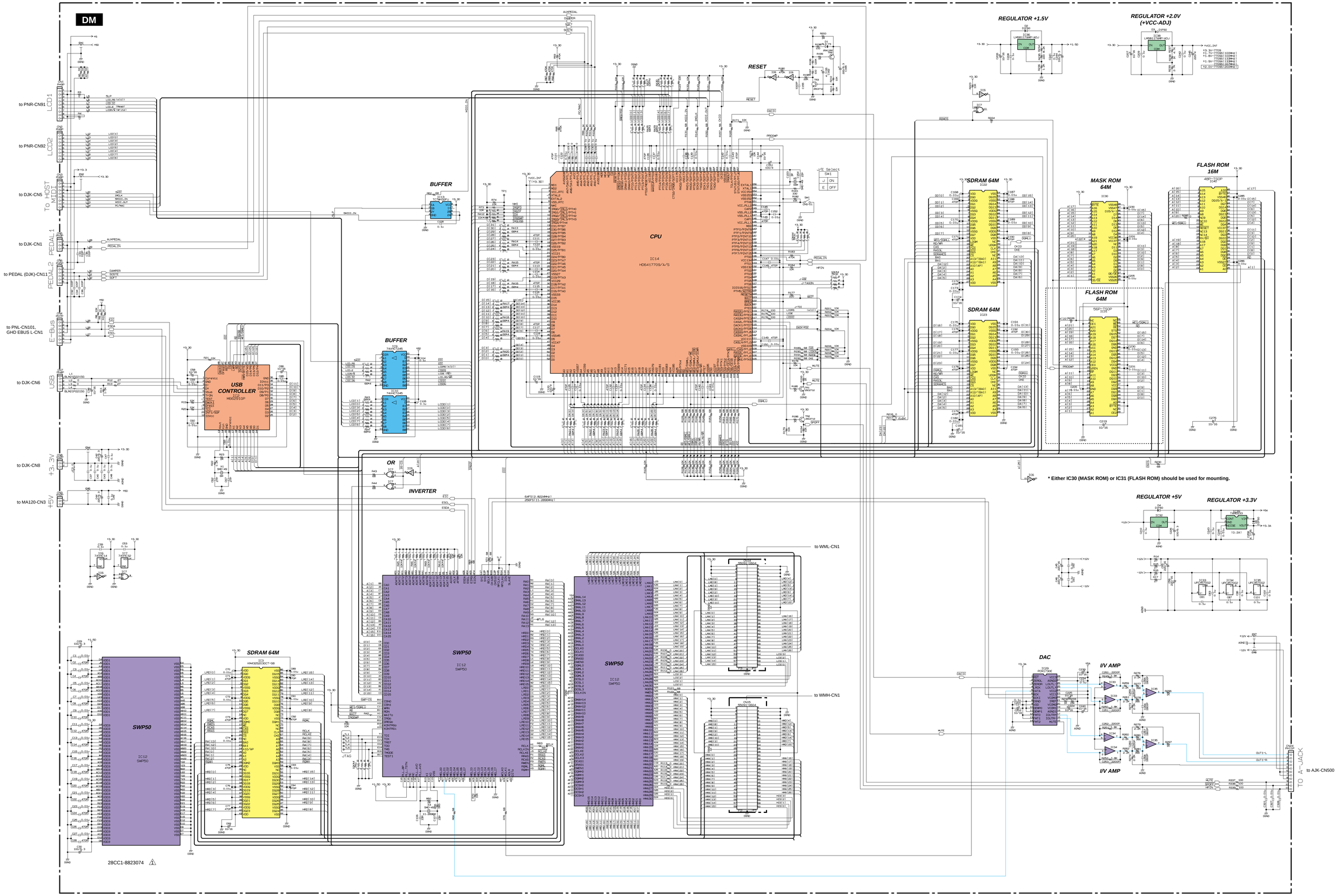

* Either IC30 (MASK ROM) or IC31 (FLASH ROM) should be used for mounting.

Note : See parts list for details of circuit board component parts.

■ CLP-150/CLP-150M/CLP-150C OVERALL CIRCUIT BOARD 2/4 (GHD EBUS L, MK SUB, GHD M, GHD H, WML, WMH)

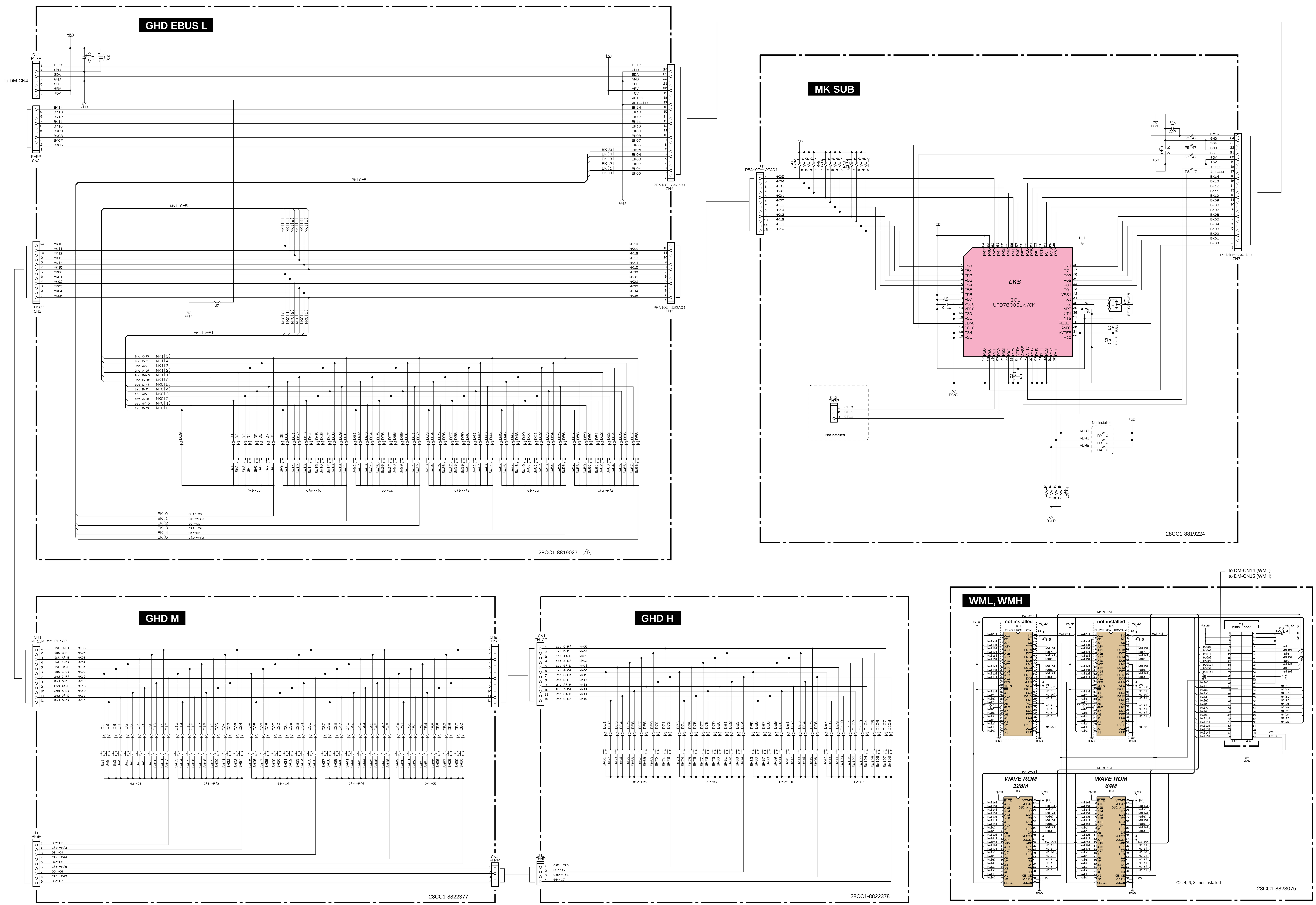

Note : See parts list for details of circuit board component parts.

CLP-150/CLP-150M/CLP-150C

■ CLP-150/CLP-150M/CLP-150C OVERALL CIRCUIT BOARD 3/4 (PNL, PNR, MV2, DJK, PEDAL(DJK), PEDAL(SW), AJK, HP, PL)

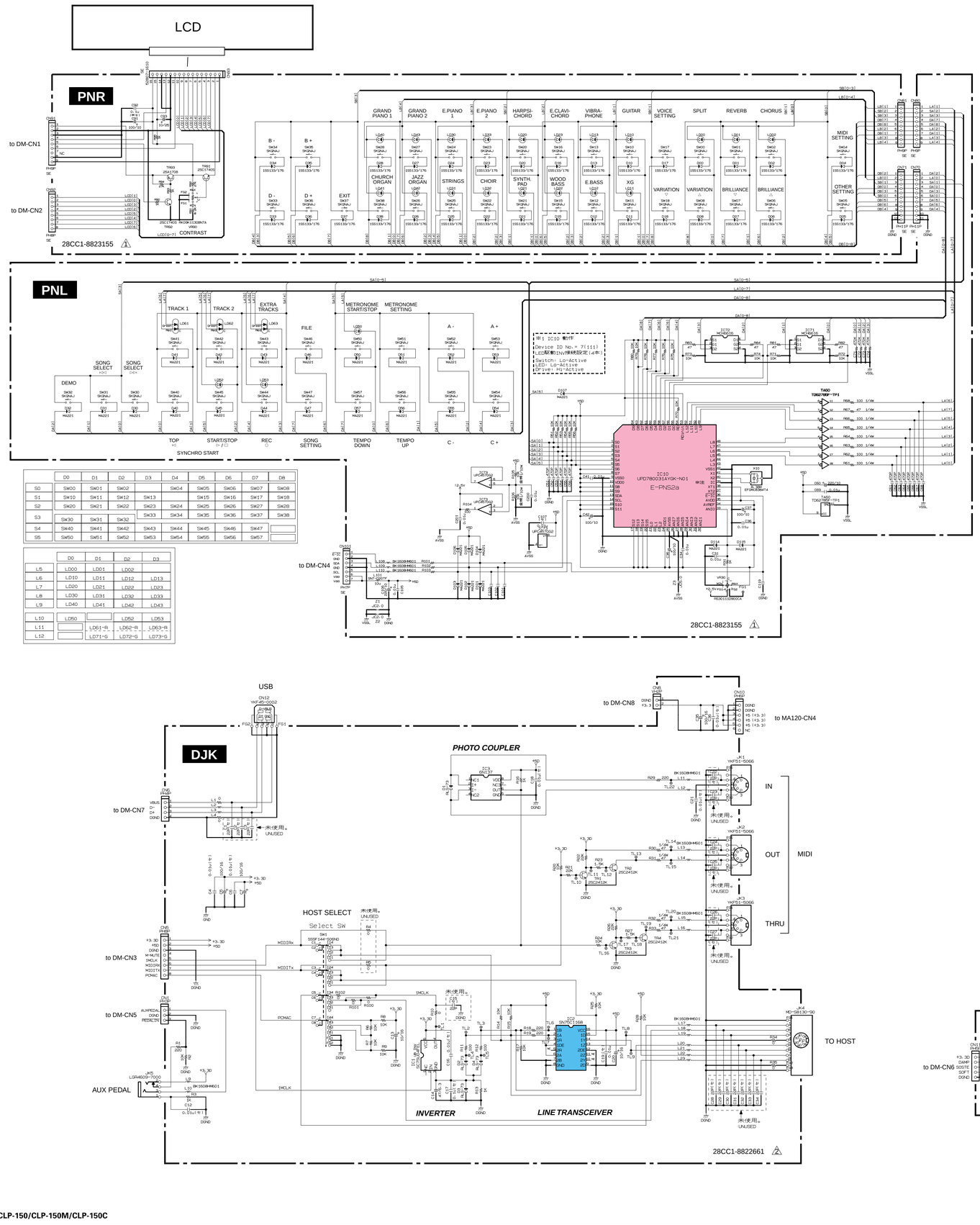

	D0	D1	D2	D3	D4	D5	D6	D7	D8
S0	SW00	SW01	SW02		SW04	SW05	SW06	SW07	SW08
S1	SW10	SW11	SW12	SW13		SW15	SW16	SW17	SW18
S2	SW20	SW21	SW22	SW23	SW24	SW25	SW26	SW27	SW28
S3	SW30	SW31	SW32	SW33	SW34	SW35	SW36	SW37	SW38
S4	SW40	SW41	SW42	SW43	SW44	SW45	SW46	SW47	
S5	SW50	SW51	SW52	SW53	SW54	SW55	SW56	SW57	

	D0	D1	D2	D3
L5	LD00	LD01	LD02	
L6	LD10	LD11	LD12	LD13
L7	LD20	LD21	LD22	LD23
L8	LD30	LD31	LD32	LD33
L9	LD40	LD41	LD42	LD43
L10	LD50		LD52	LD53
L11		LD61-R	LD62-R	LD63-R
L12		LD71-G	LD72-G	LD73-G

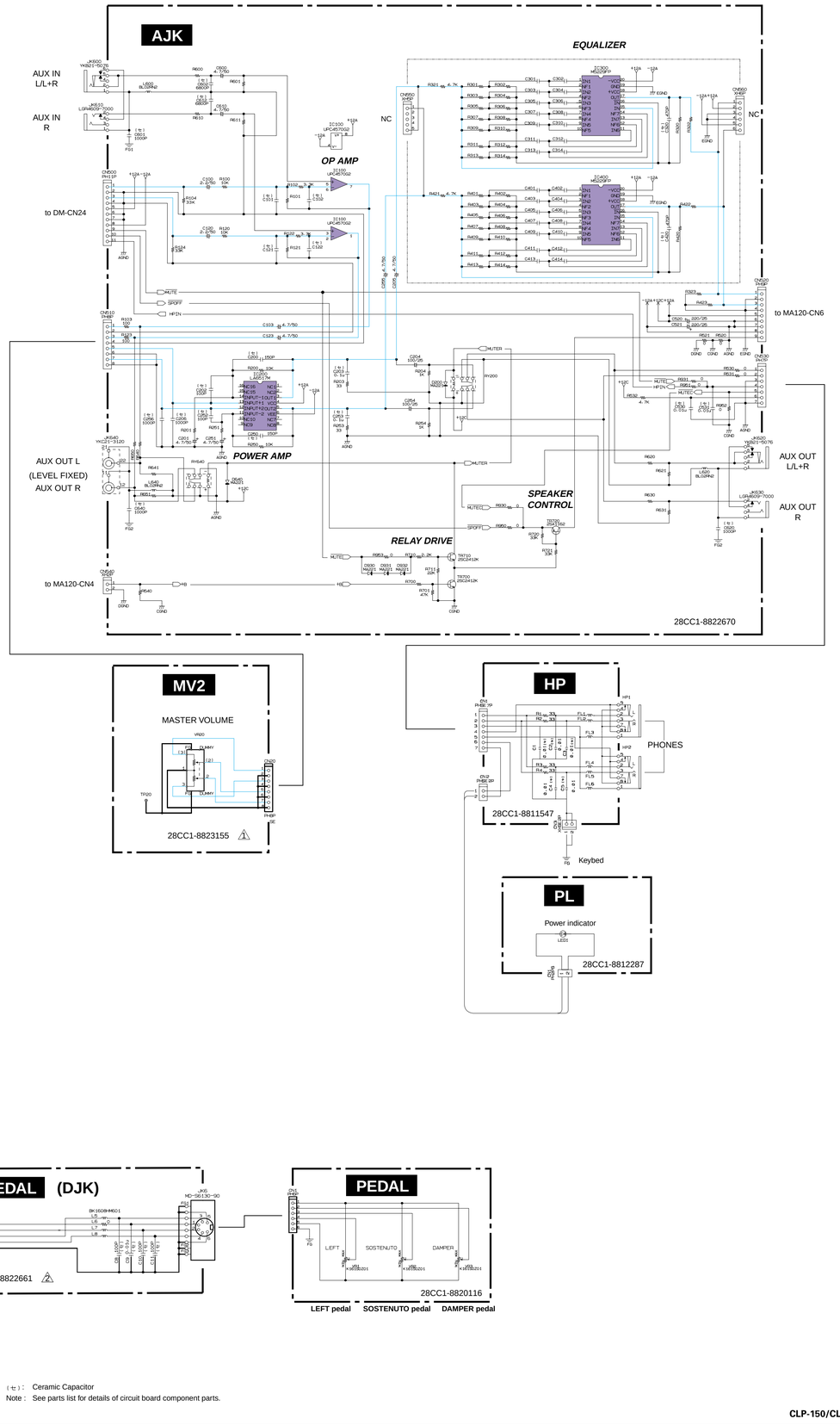

(セ): Ceramic Capacitor
Note : See parts list for details of circuit board component parts.

CLP-150/CLP-150M/CLP-150C

■ CLP-150/CLP-150M/CLP-150C OVERALL CIRCUIT BOARD 4/4 (FU120L, MA120, NET1)

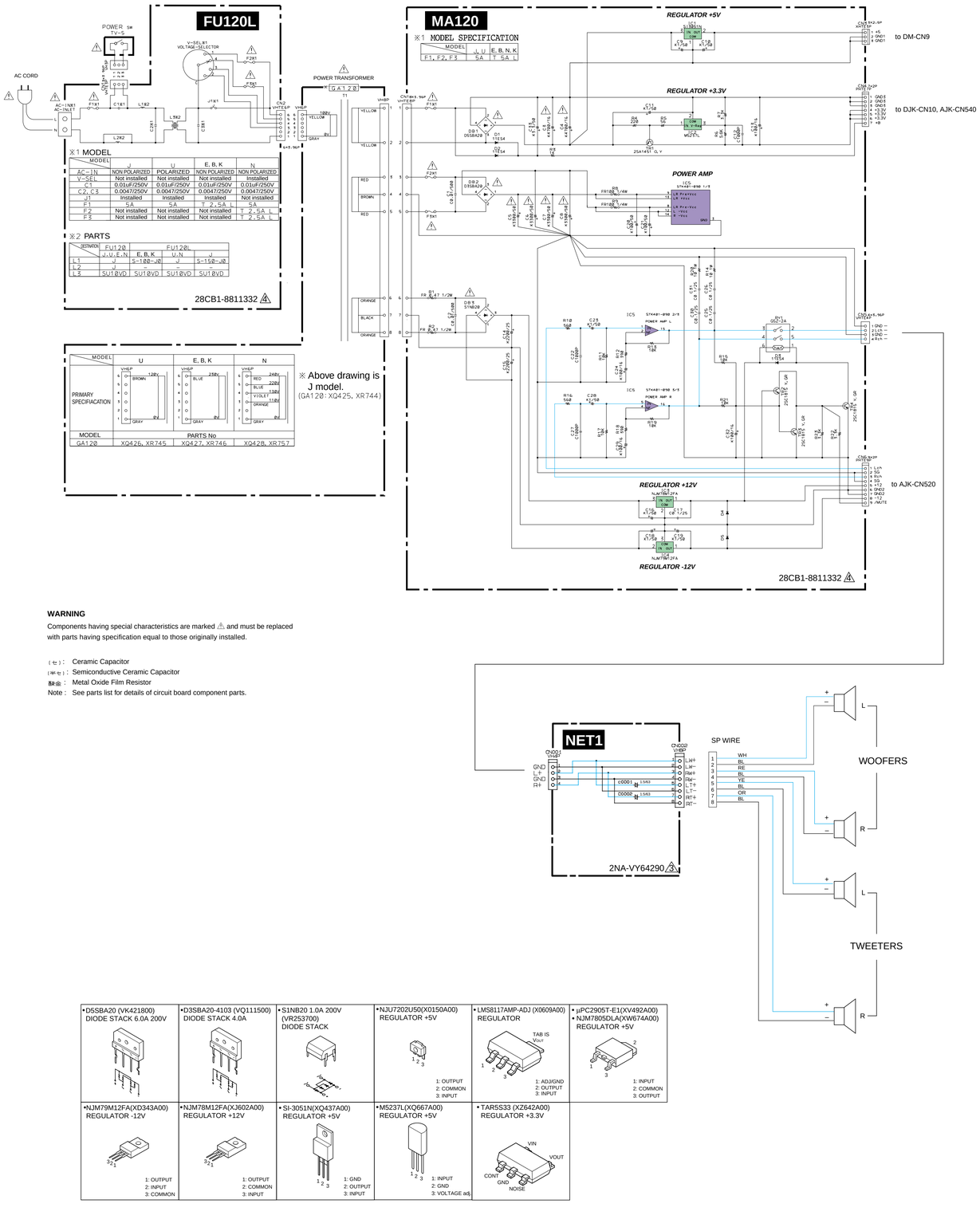

WARNING

Components having special characteristics are marked ⚠ and must be replaced with parts having specification equal to those originally installed.

(セ): Ceramic Capacitor
(半セ): Semiconductive Ceramic Capacitor
酸金: Metal Oxide Film Resistor
Note: See parts list for details of circuit board component parts.

•D5SBA20 (VK421800) DIODE STACK 6.0A 200V	•D3SBA20-4103 (VQ111500) DIODE STACK 4.0A	•S1NB20 1.0A 200V (VR253700) DIODE STACK	•NJU7202U50(X0150A00) REGULATOR +5V 1: OUTPUT 2: COMMON 3: INPUT
•LMS8117AMP-ADJ (X0609A00) REGULATOR TAB IS Vout 1: ADJ/GND 2: OUTPUT 3: INPUT	•µPC2905T-E1(XV492A00) •NJM7805DLA(XW674A00) REGULATOR +5V 1: INPUT 2: COMMON 3: OUTPUT		
•NJM79M12FA(XD343A00) REGULATOR -12V 1: OUTPUT 2: INPUT 3: COMMON	•NJM78M12FA(XJ602A00) REGULATOR +12V 1: OUTPUT 2: COMMON 3: INPUT	•SI-3051N(XQ437A00) REGULATOR +5V 1: GND 2: OUTPUT 3: INPUT	•M5237L(XQ667A00) REGULATOR +5V 1: INPUT 2: GND 3: VOLTAGE adj.
•TAR5S33 (XZ642A00) REGULATOR +3.3V VIN VOUT CONT GND NOISE			

■ CLP-150/CLP-150M/CLP-150C CIRCUIT BOARD LAYOUT

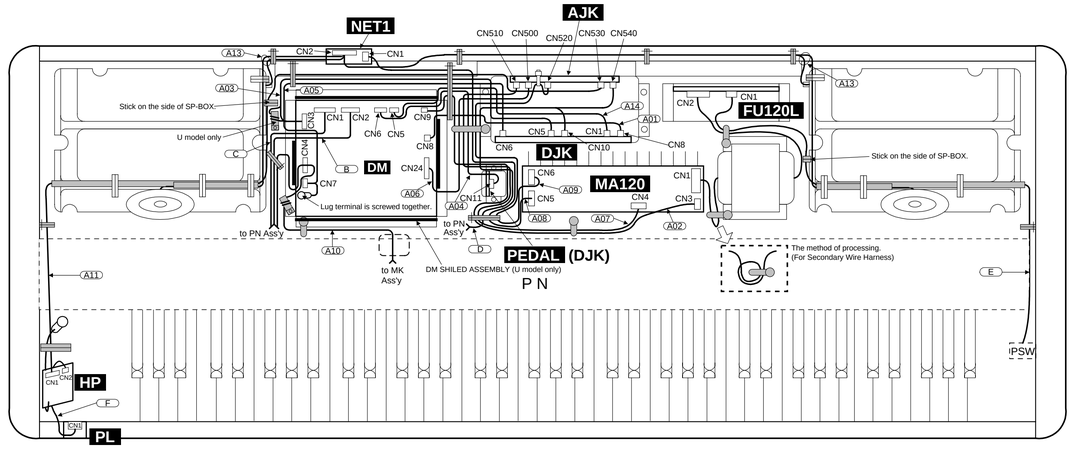

NOTE1) The meaning of symbols.

: Ferrite core
: Cord binder(vinyl tie)
: Lug tarminal
: Filament tape
: Filament tape
: Cable holder
: Connector direction
: Connector direction

NOTE2) The Wire Harness passing through Speaker Box top and (A13) does not touch a Key Cover

NOTE3) The following Wire Harness does not touch a Hammer.
(A02) (A07) (A10) (B) (C) (D)

NOTE4) Fix the following Wire Harness to PANEL STAY ASSEMBLY by Wire Harness tie.
(A02) (B) (C)

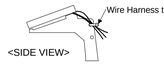

NOTE5) Fix (A10) (D) to CONTROL PANEL (PRINTED) by Wire Harness tie after inserting (A10) in PNL-CN101.



NOTE6) (A09) wire harness is fixed to the hole of circuit board AJK by wire harness tie.

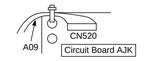

LOCATION	PART No.	PART NAME	PIN No.	DESTINATION
A01	(V876820)	3D NETWORK WIRE HARNESS	2	DM-CN8 ~ DJK-CN8
A02	(V876830)	5D POWER SUPLLY WIRE HARNESS	2	DM-CN9 ~ MA120-CN3
A03	(V937590) (V961400)	DJK WIRE HARNESS DJK-LF WIRE HARNESS (U model)	8	DM-CN3 ~ DJK-CN5
A04	(VK10380)	KRD-KRD WIRE HARNESS	5	DM-CN6 ~ PEDAL-CN11
A05	(V933990)	USB CABLE	4	DM-CN7 ~ DJK-CN6
A06	(VK10460)	KRD-KRD WIRE HARNESS	11	DM-CN24 ~ AJK-CN500
A07	(V876850)	3DB POWER SUPLLY WIRE HARNESS	7-2-6	MA120-CN4 ~ AJK-CN540 ~ DJK-CN10
A08	(V876860)	NW WIRE HARNESS	4	MA120-CN5 ~ NET1-CN1
A09	VK10600	KRD-KRD WIRE HARNESS	9	MA120-CN6 ~ AJK-CN520
A10	V9289300	EBUS-LF WIRE HARNESS	7	DM-CN4 ~ PNL-CN101 ~ GHD EBUS L-CN1
A11	(V899560)	HP WIRE HARNESS	7	AJK-CN530 ~ HP-CN1
A13	(V876880)	SP WIRE HARNESS	8	NET1-CN2 ~ WF-L, R TW-L, R
A14	(VK10530)	KRD-KRD WIRE HARNESS	3	DM-CN5 ~ DJK-CN1
B	(VK11830)	KRD-KRD WIRE HARNESS	8	DM-CN2 ~ PNR-CN92
C	(VK11840)	KRD-KRD WIRE HARNESS	9	DM-CN1 ~ PNR-CN91
D	(V876870)	VOL WIRE HARNESS	8	AJK-CN510 ~ MV2-CN20
E	V876890	PSW WIRE HARNESS	2	PSW ~ FU120L-CN1
F	VK09960	KRD-KRD WIRE HARNESS	2	HP-CN2 ~ PL-CN1

* The parts with "( )" in "Part No." are not available as service parts.

2NC-V828090 ⚠6

CLP-150/CLP-150M/CLP-150C

■ CLP-150/CLP-150M/CLP-150C BLOCK DIAGRAM

CLP-150/CLP-150M/CLP-150C