PROFESSIONAL WORKSTATION

9000Pro

SERVICE MANUAL



CONTENTS

SPECIFICATIONS 3
WIRING 5
CIRCUIT BOARD LAYOUT 6
PANEL LAYOUT 8
DISSASSEMBLY PROCEDURE 10
INSTALLING OPTIONAL HARDWARE 16
LSI PIN DESCRIPTION 24
IC BLOCK DIAGRAM 33
CIRCUIT BOARDS 36
INSPECTIONS & TEST PROGRAM 54
MIDI IMPLEMENTATION CHART 60
PARTS LIST
BLOCK DIAGRAM
OVERALL CIRCUIT DIAGRAM

This document is printed on chlorine free (ECF) paper with soy ink.

PK 001647

YAMAHA
HAMAMATSU, JAPAN
1.416K-9112 Printed in Japan '00.10

IMPORTANT NOTICE

This manual has been provided for the use of authorized Yamaha Retailers and their service personnel. It has been assumed that basic service procedures inherent to the industry, and more specifically Yamaha Products, are already known and understood by the users, and have therefore not been restated.

WARNING : Failure to follow appropriate service and safety procedures when servicing this product may result in personal injury, destruction of expensive components and failure of the product to perform as specified. For these reasons, we advise all Yamaha product owners that all service required should be performed by an authorized Yamaha Retailer or the appointed service representative.

IMPORTANT : This presentation or sale of this manual to any individual or firm does not constitute authorization certification, recognition of any applicable technical capabilities, or establish a principal-agent relationship of any form.

The data provided is belived to be accurate and applicable to the unit(s) indicated on the cover. The research engineering, and service departments of Yamaha are continually striving to improve Yamaha products. Modifications are, therefore, inevitable and changes in specification are subject to change without notice or obligation to retrofit. Should any discrepancy appear to exist, please contact the distributor's Service Division.

WARNING : Static discharges can destroy expensive components. Discharge any static electricity your body may have accumulated by grounding yourself to the ground bus in the unit (heavy gauge black wires connect to this bus.)

IMPORTANT : Turn the unit OFF during disassembly and parts replacement. Recheck all work before you apply power to the unit.

WARNING: CHEMICAL CONTENT NOTICE!

The solder used in the production of this product contains LEAD. In addition, other electrical/electronic and/or plastic (Where applicable) components may also contain traces of chemicals found by the California Health and Welfare Agency (and possibly other entities) to cause cancer and/or birth defects or other reproductive harm.

DO NOT PLACE SOLDER, ELECTRICAL/ELECTRONIC OR PLASTIC COMPONENTS IN YOUR MOUTH FOR ANY REASON WHAT SO EVER!

Avoid prolonged, unprotected contact between solder and your skin! When soldering, do not inhale solder fumes or expose eyes to solder/flux vapor!

If you come in contact with solder or components located inside the enclosure of this product, wash your hands before handling food.

IMPORTANT NOTICE FOR THE UNITED KINGDOM

Connecting the Plug and Cord

IMPORTANT. The wires in this main lead are coloured in accordance with the following code:
BLUE: NEUTRAL
BROWN: LIVE

As the colours of the wires in the main lead of this apparatus may not correspond with the coloured markings identifying the terminals in your plug, proceed as follows:

The BLUE wire must be connected to the terminal that is marked with the letter N (or coloured BLACK).

The BROWN wire must be connected to the terminal that is marked with the letter L (or coloured RED).

Be certain that neither core is connected to the earth terminal of the three pin plug.

WARNING

Components having special characteristics are marked ⚠ and must be replaced with parts having specification equal to those originally installed.

SPECIFICATIONS

Keyboard:		
	76 Keys (E0 ~ G6) Weighted	with Touch Response (Initial/After)
Polyphony:		
	126 Notes max	
Voices:		
Preset	848	342 Voices + 480 XG Voices + 24 Drum Kits + 2 SFX Kits
Custom	32	User programmable
Organ Flute	20	10 Preset + 10 User, 9 Footages; with Modeling Technology
Orchestration:		
Right	3 PART	RIGHT1, RIGHT2, RIGHT3
Left	1 PART	
Plug-In System:		
Slots	2	
Supported Boards	PLG100-DX, PLG100-VL, PLG150-AN, PLG150-PF, PLG150-DX, PLG150-VL, PLG100-XG	
Edit	Plug-in Custom Voice Creator	
Sampling:		
Quality	16bit 44.1KHz	
File Import	AIFF, WAV	
Edit	Resampling/Loop Point/Normalize/Volume/Tune	
RAM Capacity	1MByte	11.8sec
Expanded Capacity	9M/17M/33M/65MByte	106.9/202.1/392.3/772.7sec
Consecutive Record Time	380sec max	When 2 SIMM modules (16MB or 32MB) are installed..
Effects:		
Reverb	29 Preset + 3 User	
Chorus	25 Preset + 3 User	
DSP Effect	164 Preset	for Style and Song
DSP Effect	(164 Preset + 10 User) x 4 Blocks	for R1, R2, R3, LEFT
Number of Effects in DSP	Max. 3	
DSP Effect	84 Preset + 10 User	for Mic/Line In
DSP Variation	Slow/Fast	for R1, R2, R3, LEFT
POLY/MONO	Yes	
Vocal Harmony	59 Preset + 10 User	3 notes polyphony
Harmony/Echo	17 Preset	
Master EQ	2 Preset + 2 User	5 Band
Part EQ	29 Part	2 Band, 29 Part (R1, R2, R3, LEFT, ACMPx8, SONGx16, M.PAD)
Touch Response	5 Preset	
Tempo	32 ~ 280	
Transpose	-24 ~ 0 ~ 24	
Tuning	414.6 ~ 440 ~ 466.8Hz	
Octave	-1, 0, +1	only for Upper
Pitch Bend	Wheel	
Modulation	Wheel	
Left Hold	Yes	
Auto Accompaniment:		
Preset	125	
Flash	87	Up to 1.8MByte, 120 style max.
Disk	66 (included in the accessory disk)	DISK DIRECT function is available.
Custom Style	1	Pattern Assembly, Realtime/Step Rec, Event Edit, Full Parameter Edit
Format	Style File Format	
Control	INTRO x 3 FILL IN x 4 BREAK FILL x 1 MAIN x 4 ENDING x 3 FADE IN/OUT TAP TEMPO	
Fingering	Single Finger, Multi Finger, Fingered, Fingered Pro, On Bass, On Bass Pro, Full Keyboard	
One Touch Setting:		
	4/Style	Fully programmable
Music Database:		
	616	Fully programmable
Multi Pad:		
	4Pads x 60 Banks	58 Multi Pad Bank, 1 MIDI Control Bank, 1 Scale Tune Bank Realtime/Step Rec, Event Edit
Song:		
Playback	Disk Direct Playback	with Ultra Quick Start function
Track	16	
Recording	RAM Recording	Quick/Multitrack/Step/Chord Step Rec, Event Edit
RAM Capacity	300kbyte	Approximately 38,000 notes max.

Registration Memeory:		
	512	8 Switches x 64 Banks, Freeze function
Language:		
	5 languages	English, German, French, Spanish, Italian
Display:		
	Back Lit Graphic LCD	240 x 320 Dots, video out capability
Disk:		
Floppy Disk Drive	3.5" 2HD/2DD	
Built-in Hard Disk	Optional	
Demonstations:		
	18 songs	
Connectors:		
MIDI	MIDI A/B (IN/OUT)	MIDI A can switch to TO HOST.
	TO HOST	HOST SELECT SW (Mac/PC1/PC2/MIDI)
Foot Pedal	FOOT SWITCH1	
	FOOT SWITCH2	
	FOOT VOLUME	
SCSI	D-sub Half Pitch 50pins	
VIDEO OUT	Pin Type	NTSC/PAL Composite Signal
PC KEYBOARD	Mini DIN Type	PC/AT Standard
Console Lamp Socket	2	for gooseneck lamp
Analog	PHONES	
	LOOP SEND(L/L+R,R)	
	LINE OUT MAIN (L/L+R,R), SUB (1/2/3/4)	
	AUX IN/LOOP RETURN(L/L+R,R), TRIM VOL	
	MIC/LINE IN (XLR/PHONE Plug Compatible)	LEVEL (MIC1/MIC2/LINE), INPUT VOLUME, Indicator
Power Consumption:		
	47W (120V), 47W (220 ~ 240V)	
Weight:		
	20.5Kg (45lbs. 3oz)	
Dimensions:		
W x H x D	1269 x 407.5 x 140mm (49-15/16" x 16-1/16" x 5-1/2")	without Music Stand
Supplied Accessories:		
Music Stand	1	
AC Power Cord	1	
AC Plug Adaptor	1	in applicable areas only
Floppy Disk	4	Disk Styles, Factory Data Backup Disk, Plug-in Custom Voice Disk
Owner's Manual	1	
Optional Accessories:		
Foot Switch	FC5	
Foot Volume	FC7	
Headphones	HPE-150,160	
Mic	MZ106s	Dynamic Microphone IMP.250
Keyboard Stand	LG-100	
Hard Disk	2.5inch IDE	Height 12.5mm max, 8GByte max
SIMM	4M/8M/16M/32MByte	72pin SIMM, 16bit BUS, JEDEC
SCSI Device	SCSI-2	Hard Disk, CD-ROM*, ZIP, MO, Jaz (Iomega), 8GByte max per device
PC Keyboard	PC/AT Standard	
CRT Display	NTSC or PAL	
Gooseneck Lamp	4 Pin XLR Connector	DC 12V / 5 W max.

* Supports ISO9660 Level1 except Multi Session Disk Format.
Audio-CD Format is not supported.

WIRING

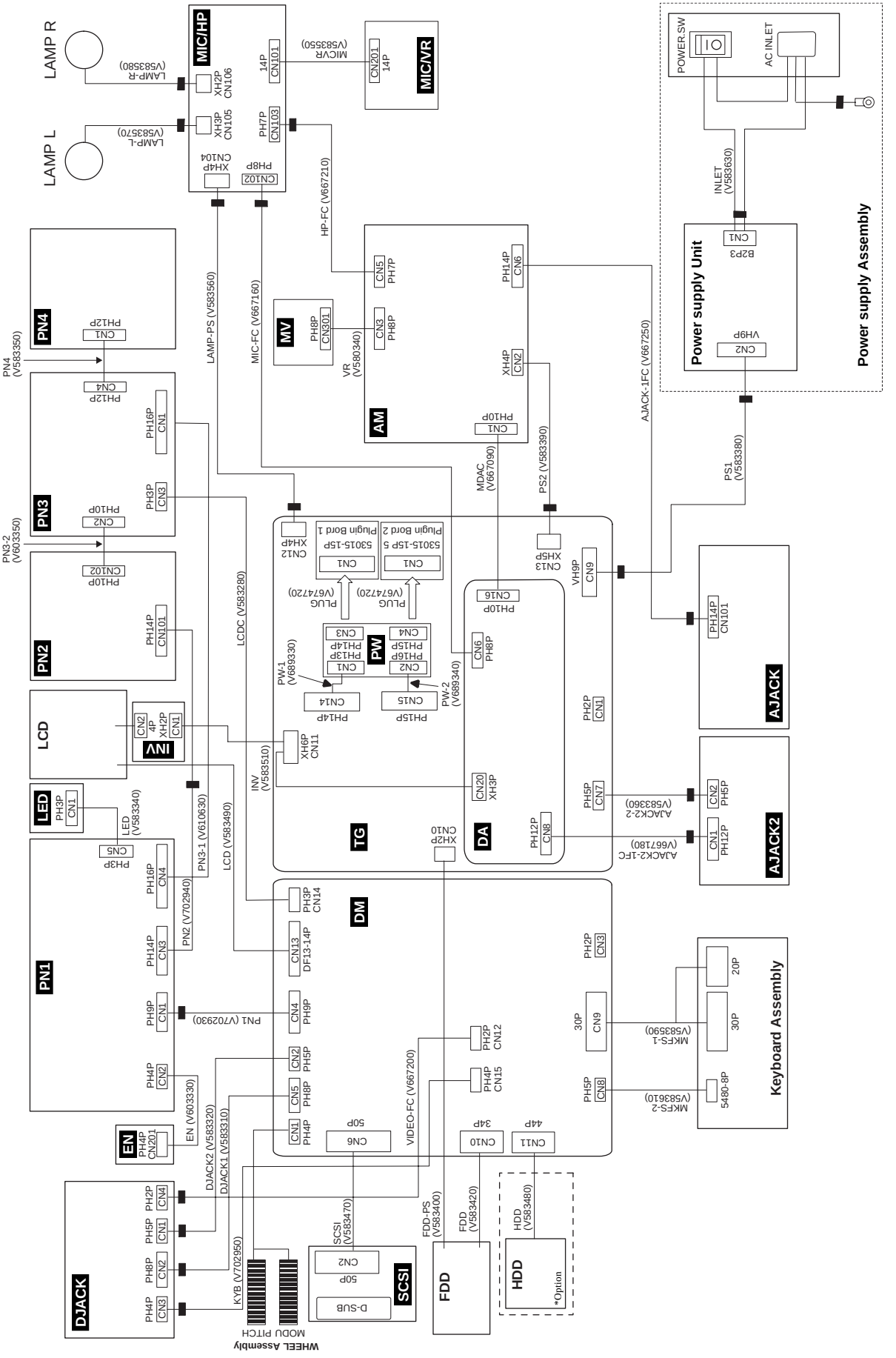
LAMP R
LAMP L
MIC/HP
MIC/VR
POWER.SW
AC INLET
Power supply Unit
Power supply Assembly
PN4
PN3
PN2
PN1
LCD
INV
LED
EN
DJACK
MV
AM
TG
DA
PW
DM
AJACK
AJACK2
Keyboard Assembly
SCSI
FDD
HDD
*Option
WHEEL Assembly
MODU PITCH
LAMP-R (V583580)
LAMP-L (V583570)
MICVR (V583550)
HP-FC (V667210)
LAMP-PS (V583560)
MIC-FC (V667160)
VR (V580340)
MDAC (V667090)
PS2 (V583390)
AJACK-1FC (V667250)
INLET (V583630)
PS1 (V583380)
PN4 (V583350)
PN3-2 (V603350)
LCDC (V583280)
INV (V583510)
LED (V583340)
PN3-1 (V610630)
LCD (V583490)
PN2 (V702940)
PN1 (V702930)
EN (V603330)
DJACK2 (V583320)
DJACK1 (V583310)
KYB (V702950)
SCSI (V583470)
FDD-PS (V583400)
FDD (V583420)
HDD (V583480)
VIDEO-FC (V667200)
PLUG (V674720)
PW-1 (V689330)
PW-2 (V689340)
AJACK2-2 (V583360)
AJACK2-1FC (V667180)
MKFS-1 (V583590)
MKFS-2 (V583610)
5480-8P
20P
30P
50P
34P
44P
D-SUB
5301S-15P
Plugin Bord 1
Plugin Bord 2

CIRCUIT BOARD LAYOUT

• Upper Case (Inside View 1)

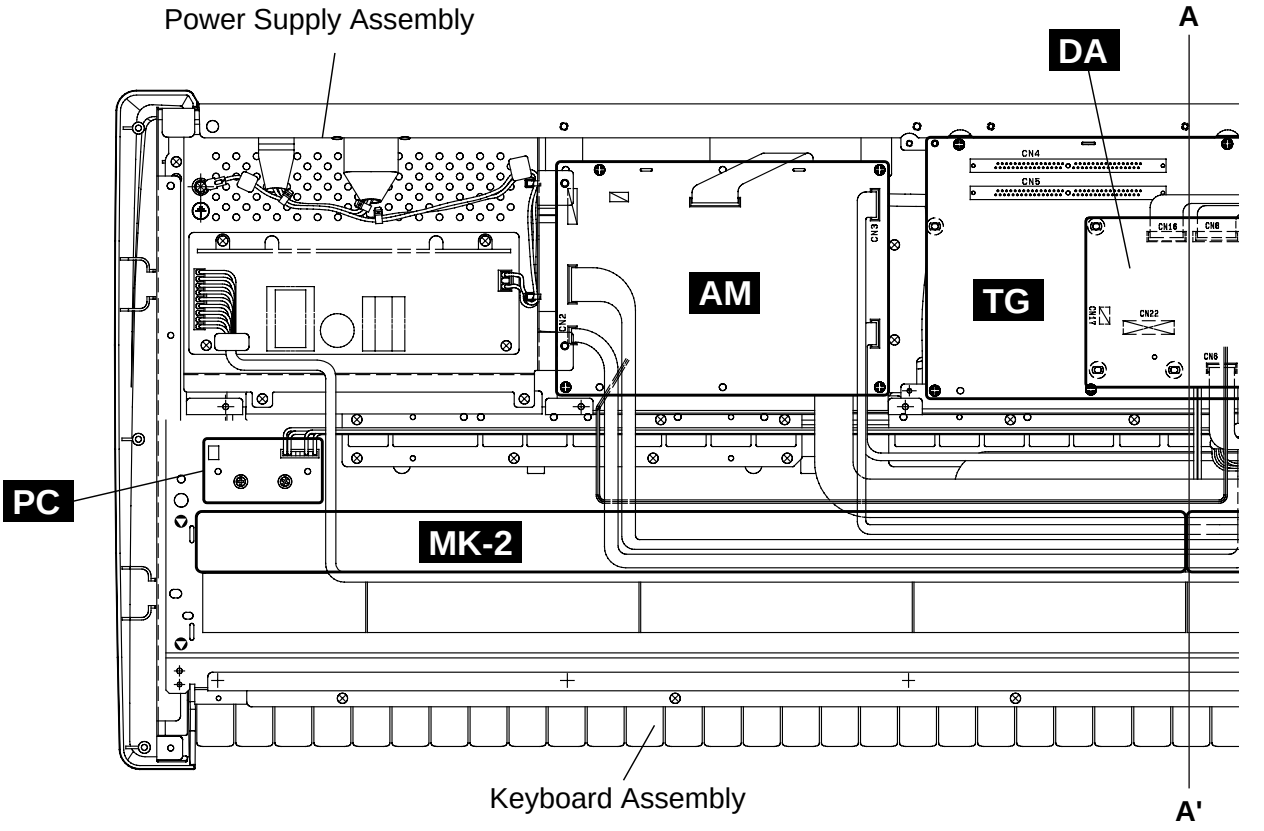

• Upper Case (Inside View 2)

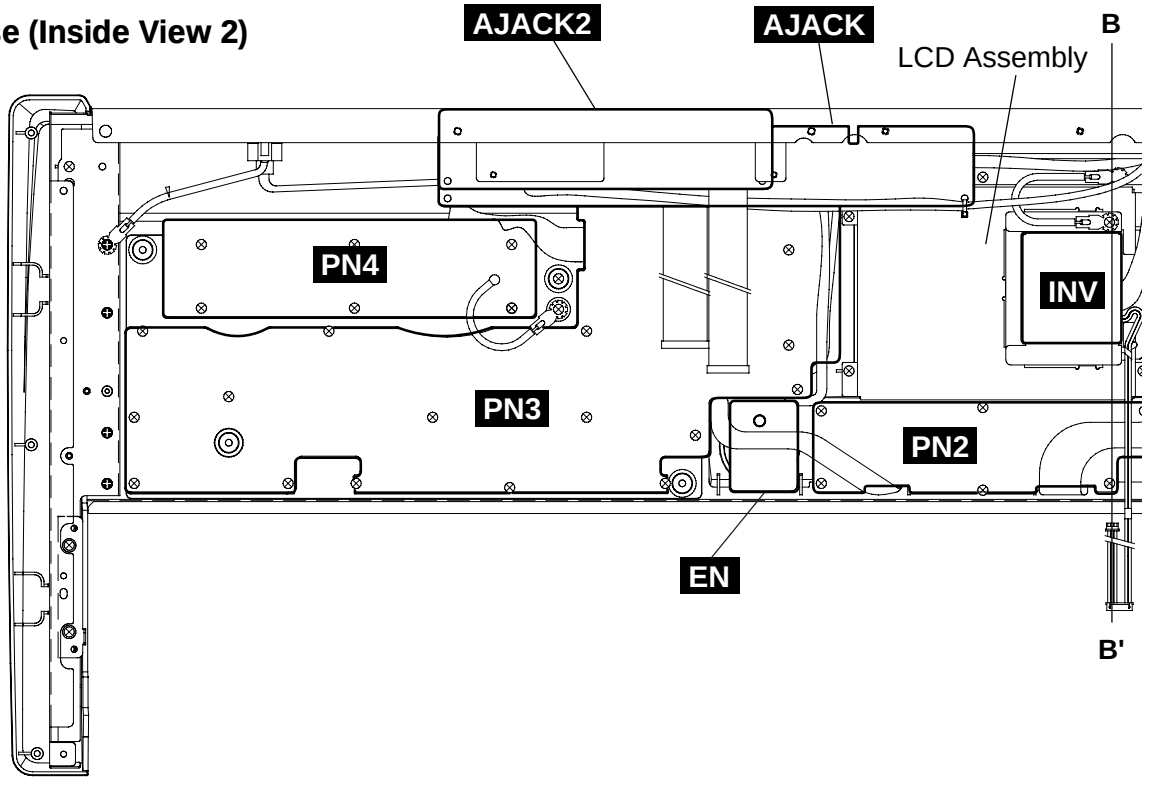

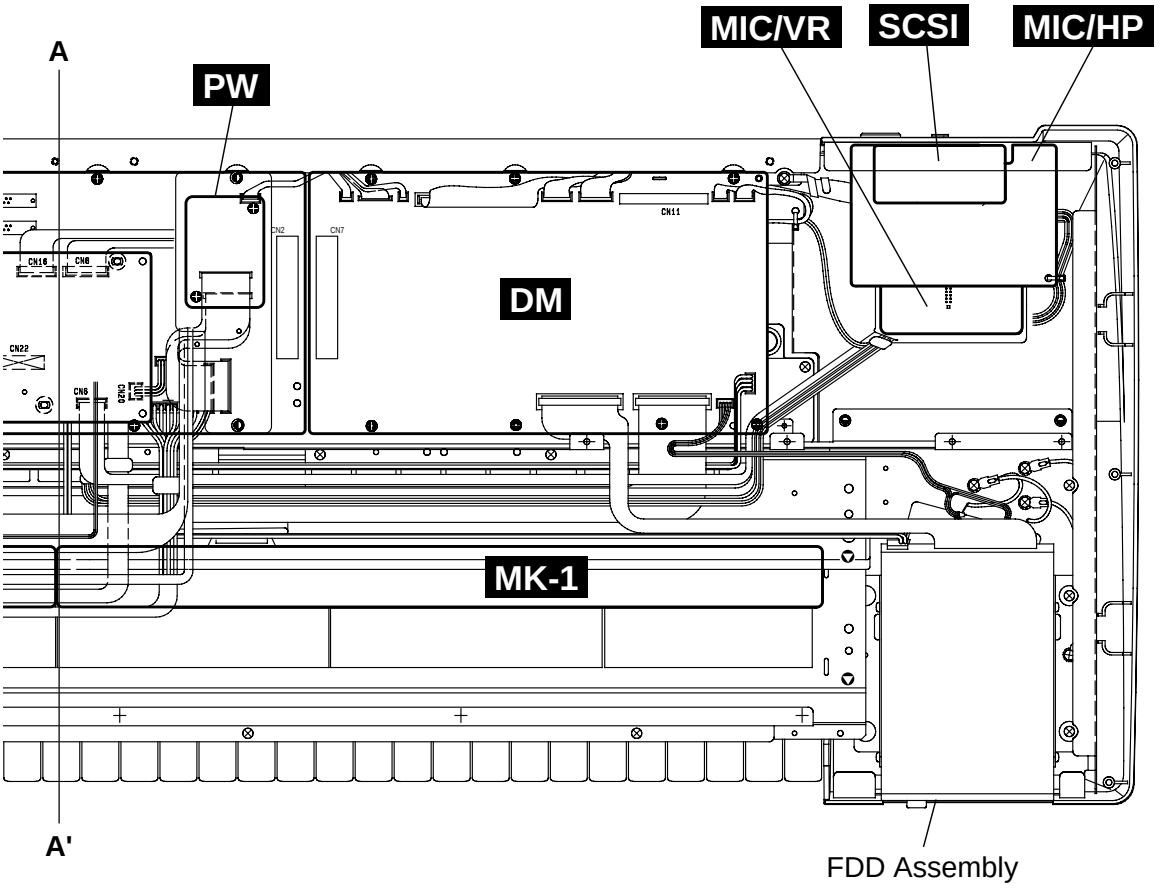
MIC/VR
SCSI
MIC/HP
A
PW
DM
MK-1
A'
FDD Assembly

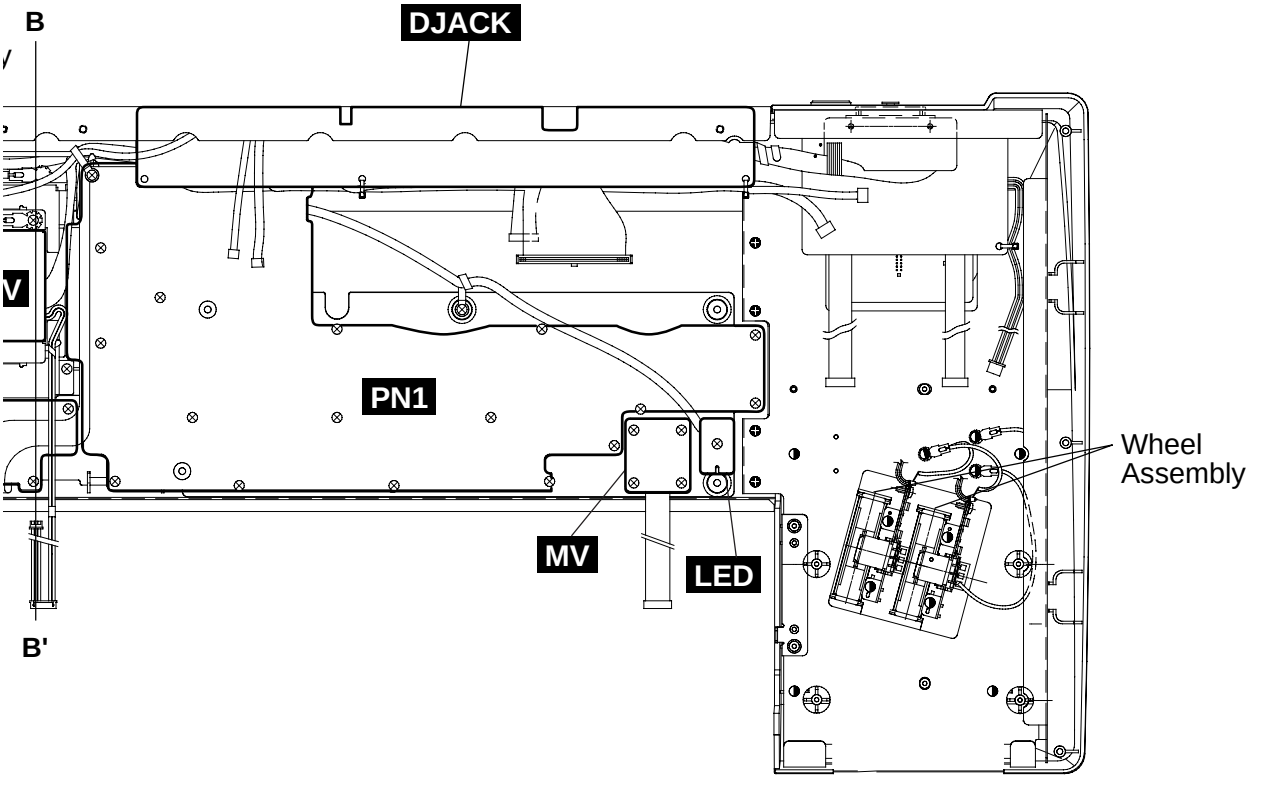
B
DJACK
PN1
Wheel
Assembly
MV
LED
B'

PANEL LAYOUT

• Rear Panel

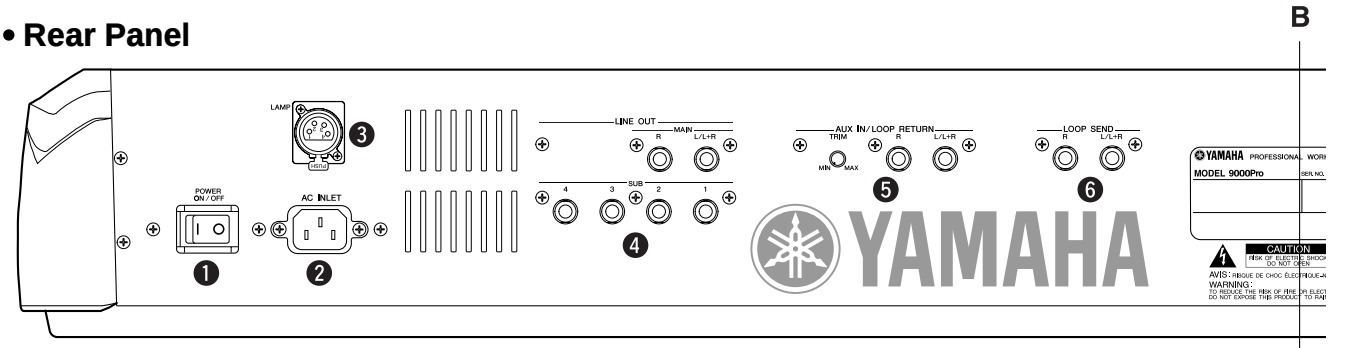

❶ **POWER ON/OFF switch**
❷ **AC INLET jack**
❸ **LAMP jack**
❹ **LINE OUT jacks**
MAIN (R, L/L+R)
SUB (1, 2, 3, 4)
❺ **AUX IN/LOOP RETURN jacks**
(TRIM, R, L/L+R)
❻ **LOOP SEND jacks**
(R, L/L+R)
❼ **PC KEYBOARD jack**
❽ **FOOT PEDAL jacks**
(SWITCH1,SWITCH2, VOLUME)

• Front Panel

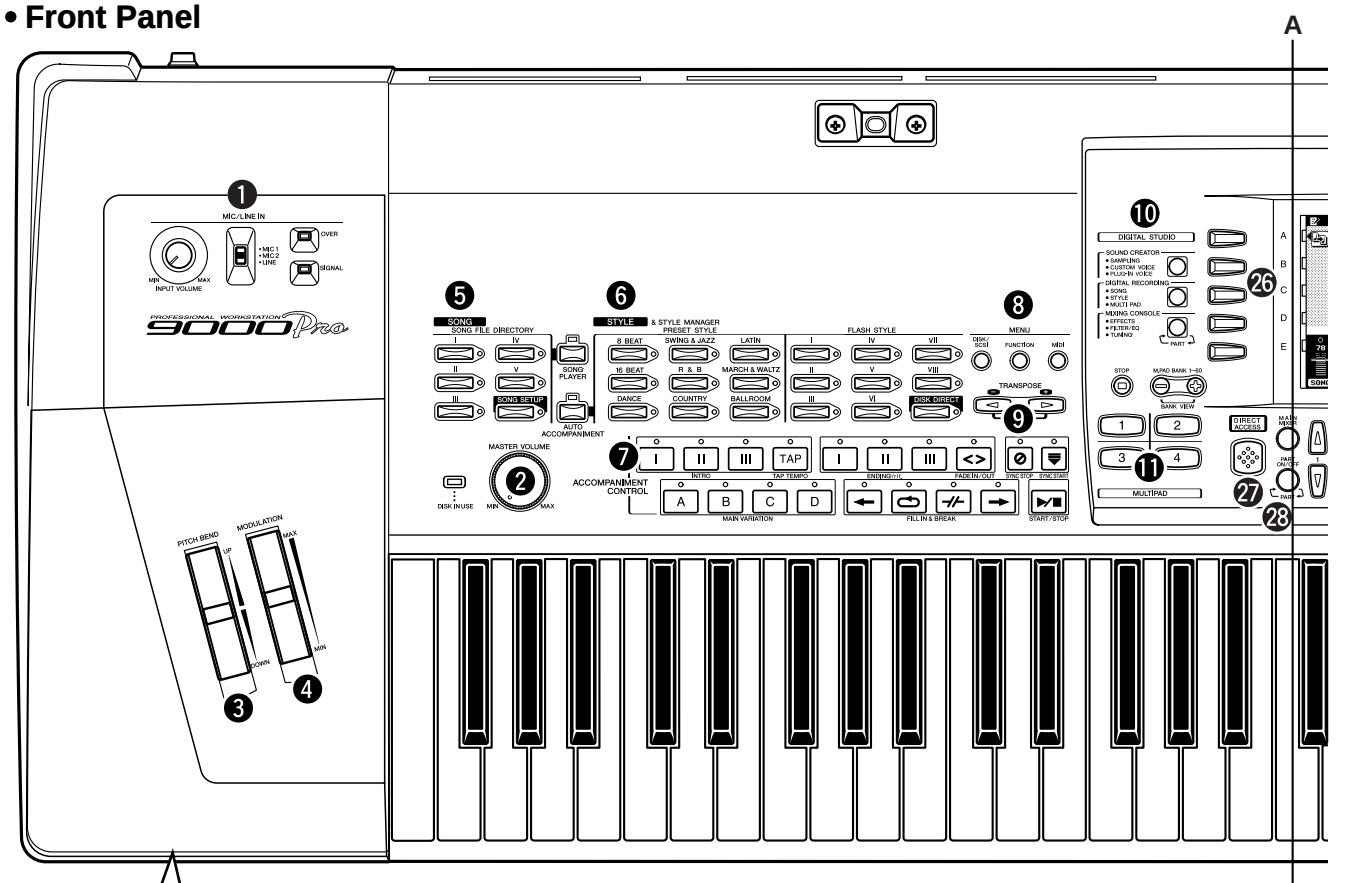

Floppy Disk Drive

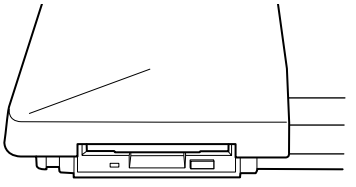

❶ **INPUT VOLUME control**
❷ **MASTER VOLUME control**
❸ **PITCH BEND wheel**
❹ **MODULATION wheel**
❺ **SONG buttons**
❻ **STYLE buttons**
❼ **ACCOMPANIMENT CONTROL buttons**
❽ **MENU buttons**
❾ **TRANSPOSE buttons**
❿ **DIGITAL STUDIO buttons**
⓫ **MULTI PAD buttons**
⓬ **Data dial**
⓭ **DEMO button**
⓮ **VOICE EFFECT buttons**
⓯ **MUSIC DATABASE button**

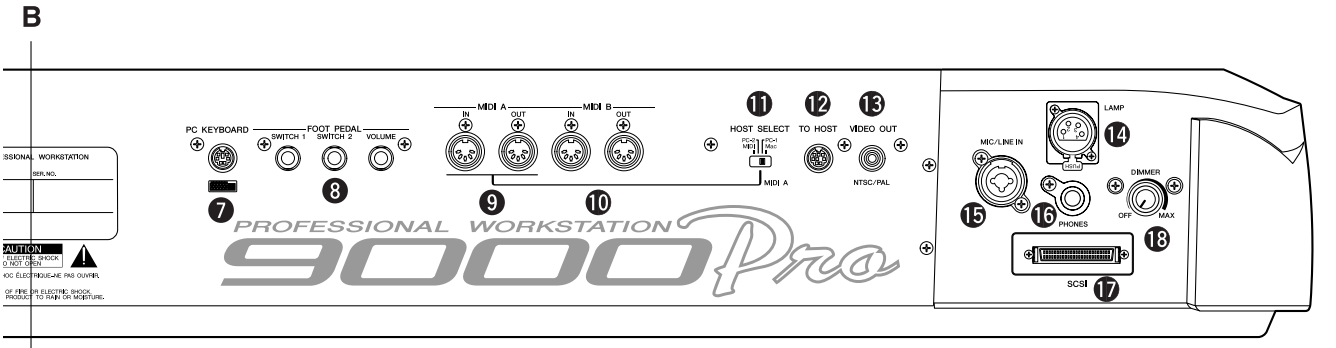

⑨ **MIDI A jacks (IN, OUT)**
⑩ **MIDI B jacks (IN, OUT)**
⑪ **HOST SELECT switch**
⑫ **TO HOST jack**
⑬ **VIDEO OUT jack**
⑭ **LAMP jack**
⑮ **MIC/LINE IN jack**
⑯ **PHONES jack**
⑰ **SCSI connector**
⑱ **DIMMER control**

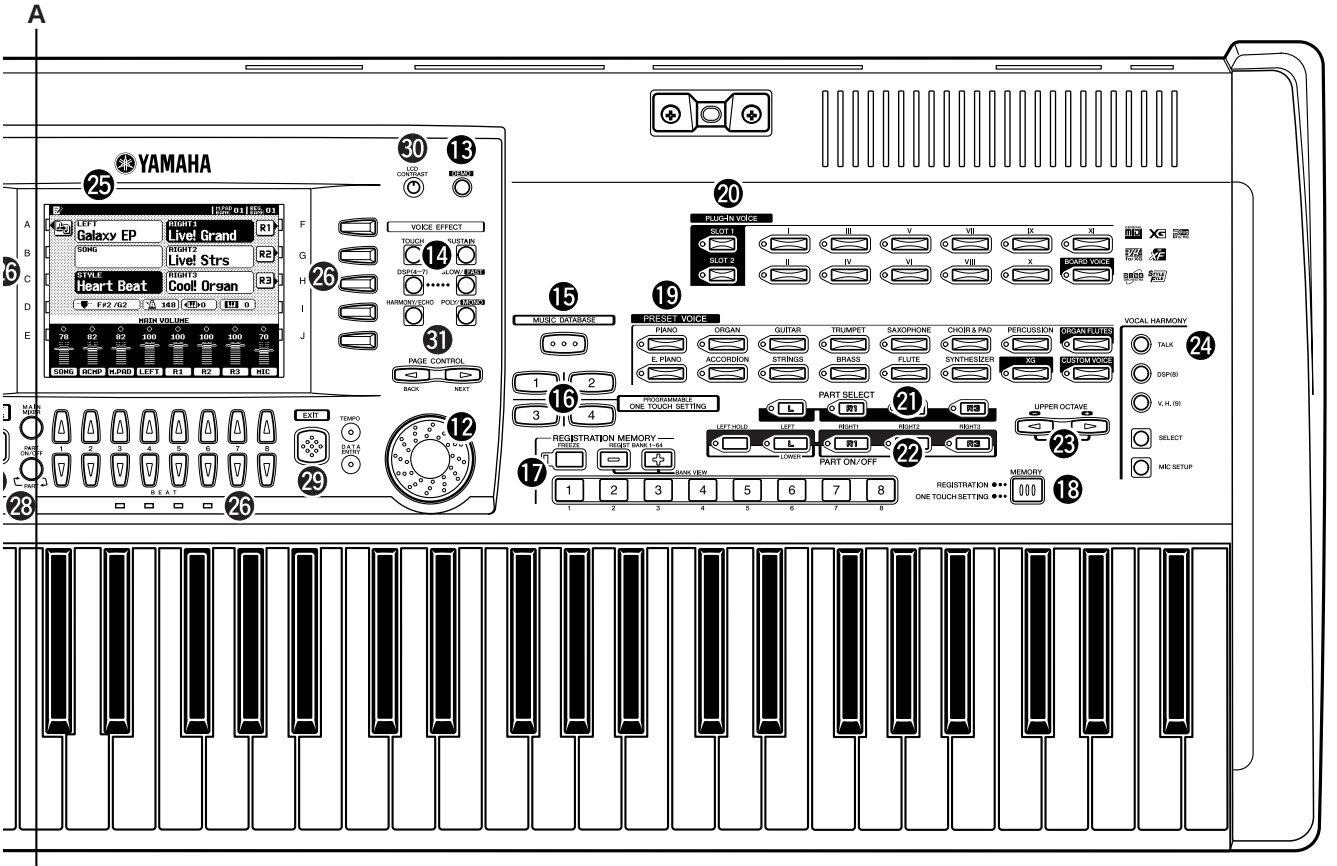

⑯ **ONE TOUCH SETTING buttons**
⑰ **REGISTRATION MEMORY buttons**
⑱ **MEMORY button**
⑲ **VOICE buttons**
⑳ **PLUG-IN VOICE buttons**
㉑ **PART SELECT buttons**
㉒ **PART ON/OFF buttons**
㉓ **UPPER OCTAVE buttons**
㉔ **VOCAL HARMONY buttons**
㉕ **LCD**
㉖ **LCD buttons (A~J, 1~8)**
㉗ **DIRECT ACCESS button**
㉘ **MAIN MIXER and PART ON/OFF buttons**
㉙ **EXIT button**
㉚ **LCD CONTRAST control**
㉛ **PAGE CONTROL buttons**

DISASSEMBLY PROCEDURE

1. Bottom Assembly (Time required: About 10 min.)

1-1 Remove the thirty-one (31) screws marked [300A] and the two (2) screws marked [340]. The bottom assembly can then be removed. (Fig.1)

*1 Before removing the bottom assembly, it confirms whether option goods (Plug-in boards, Hard disk unit) are being inserted. When option goods are being inserted, remove the bottom assembly after you disconnect the connectors which connect the 9000Pro with the option goods.

[Remove the eight (8) screws marked [80A], and then remove the plug-in board cover. (Fig.1) It is overturned, and the connectors are disconnected from the option goods.]

<Bottom view>

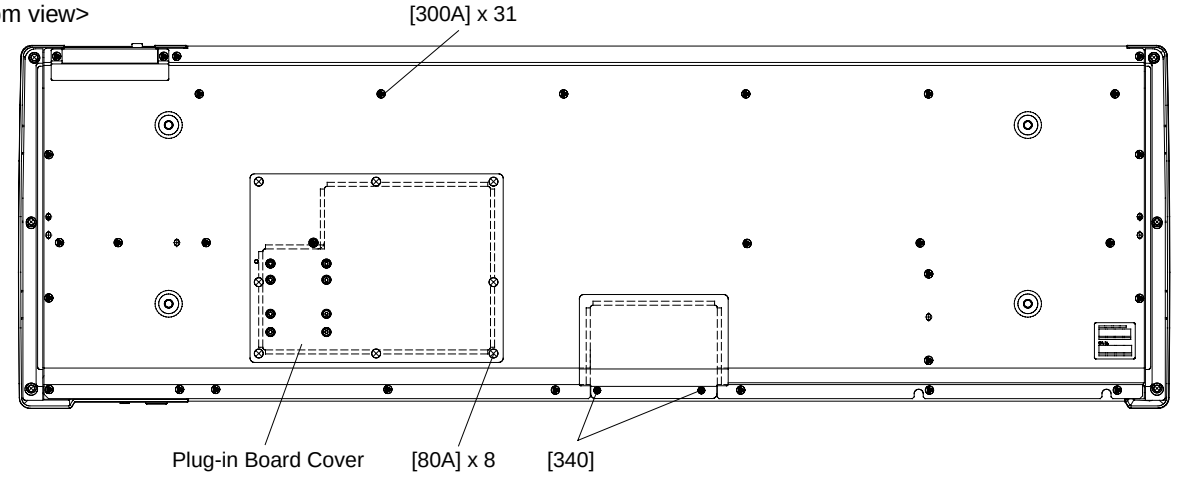

[80A]: Bonding Head Screw 3.0X6 MFZN2BL (VS863000)
[300A]: Bonding Tapping Screw-B 4.0X10 MFZN2BL (VJ254100)
[340]: Bonding Head Screw 3.0X6 MFZN2BL (VS863000)

(Fig. 1)

*2 Work with being careful not to damage the body in the part on the edge of the bottom assembly when you remove and install the bottom assembly. (Be especially careful not to scratch the body by two places of the bottom assembly which showed it by the figure 2.)

*3 Before installing the bottom assembly, it confirms whether it is being set so that three ferrite-cores (in figure 3) may not hit the center angle bracket.

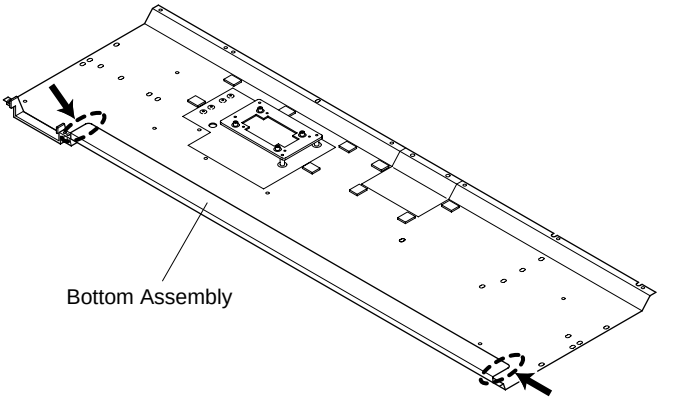

(Fig. 2)

2. Circuit Boards and Unit (Time required: About 5 minutes each)

After removing the lower case, remove the following screws. Each circuit board and unit can then be removed. (Fig. 3)

Circuit Board & Unit	Ref. No.	Screw	Prat No.	QTY
AM Circuit Board	[320A]	Bind Head Tapping Screw-B 3.0 X 6 MFZN2Y	EP600130	4
PW Circuit Board	[320B]	Bind Head Tapping Screw-B 3.0 X 6 MFZN2Y	EP600130	2
SCSI Circuit Board	[170]	Pan Head Screw 2.5 X 6 MFZN2BL	VS206600	2
Power Supply Assembly	[310A]	Bonding Tapping Screw-B 3.0 X 8 MFZN2BL	VN413300	5

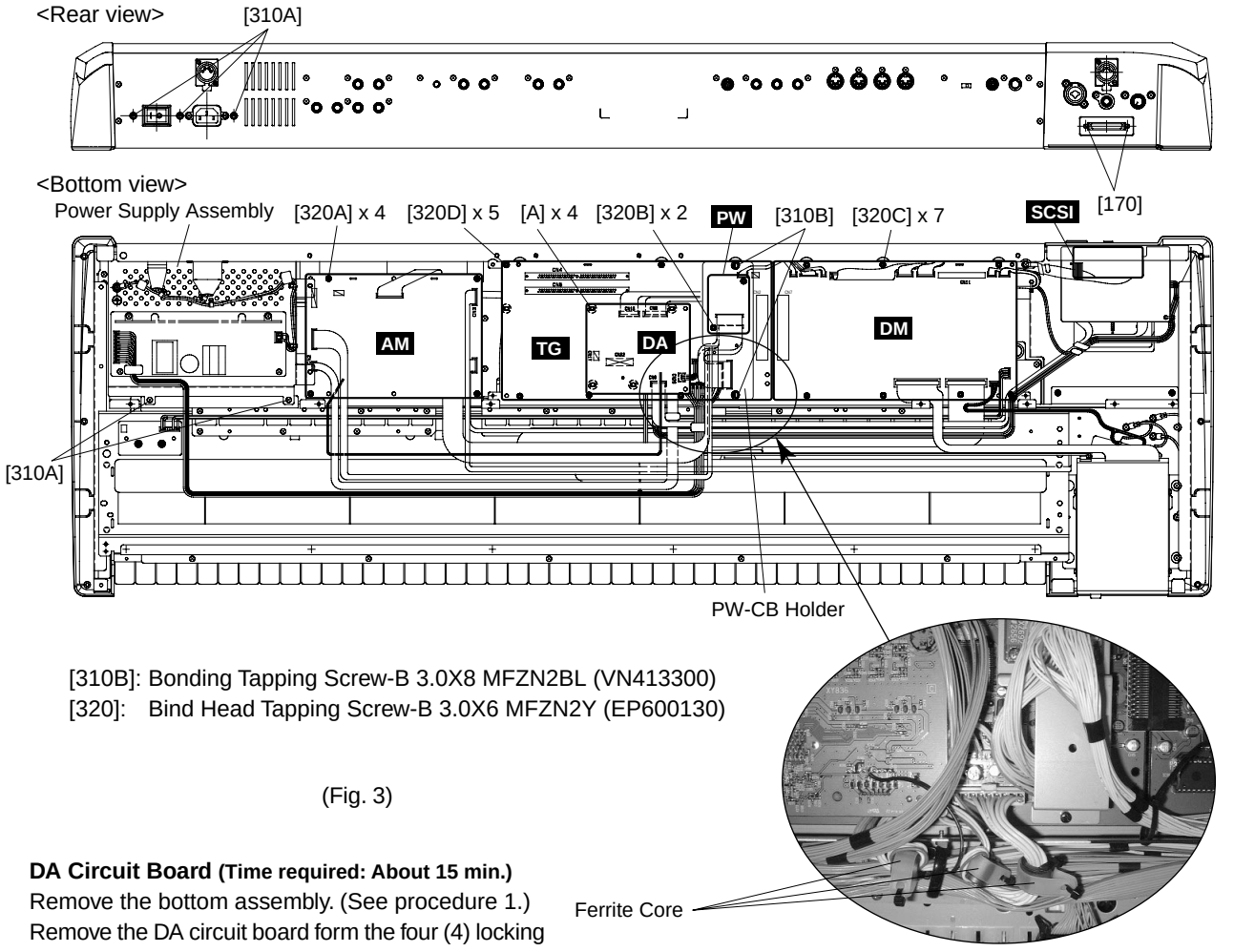

[310B]: Bonding Tapping Screw-B 3.0X8 MFZN2BL (VN413300)
[320]: Bind Head Tapping Screw-B 3.0X6 MFZN2Y (EP600130)

(Fig. 3)

3. DA Circuit Board (Time required: About 15 min.)

3-1 Remove the bottom assembly. (See procedure 1.)

3-2 Remove the DA circuit board form the four (4) locking card spacers marked [A]. (Fig. 3)

* When install the DA circuit board, check that the connector has been firmly placed into position in the area.

4. DM and TG Circuit Boards
(Time required: About 20 minutes)

4-1 Remove the bottom assembly. (See procedure 1.)

4-2 Remove the DA circuit board. (See procedure 3.)

4-3 Remove the two (2) screws marked [310B]. The PW-CB holder can then be removed with the PW circuit board. (Fig. 3)

4-4 Remove the seven (7) screws marked [320C] and the five (5) screws marked [320D]. The DM and TG circuit boards can then removed together. (Fig. 3)

4-5 Disconnect the connectors (DM-CN7, TG-CN2) to separate the DM and TG circuit boards.

5. MIC/HP and MIC/VR Circuit Boards
(Time required: About 15 minutes)

5-1 Remove the bottom assembly. (See procedure 1.)

5-2 Pull out the volume knob (DIMMER) from the rear side. (Fig. 4)

5-3 Remove the five (5) screws marked [150A]. The MIC/HP circuit board can then be removed. (Fig. 4)

5-4 Pull out the volume knob (INPUT VOLUME) from the control panel side.

5-5 Remove the four (4) screws marked [150B]. The MIC/VR circuit board can then be removed. (Fig. 4)

6. Power Supply Unit (Time required: About 15 min.)

6-1 Remove the bottom assembly. (See procedure 1.)

6-2 Remove the power supply assembly. (See procedure 2.)

6-3 Remove the two (2) screws marked [60] and the two (2) screws marked [85]. The power supply unit can then be removed. (Fig. 5)

7. INLET and LAMP-R Connector Assemblys
(Time required: About 15 minutes each)

7-1 Remove the bottom assembly. (See procedure 1.)

7-2 Remove the power supply assembly. (See procedure 2.)

7-3 **INLET Connector Assembly:**
Remove the screw marked [70A] and the two (2) screws marked [80B]. The INLET connector assembly can then be removed from the frame. (Fig. 5)

7-4 **LAMP-R Connector Assembly:**
Remove the screw marked [10e] and the two (2) screws marked [780]. The LAMP-R connector assembly can then be removed . (Fig. 6)

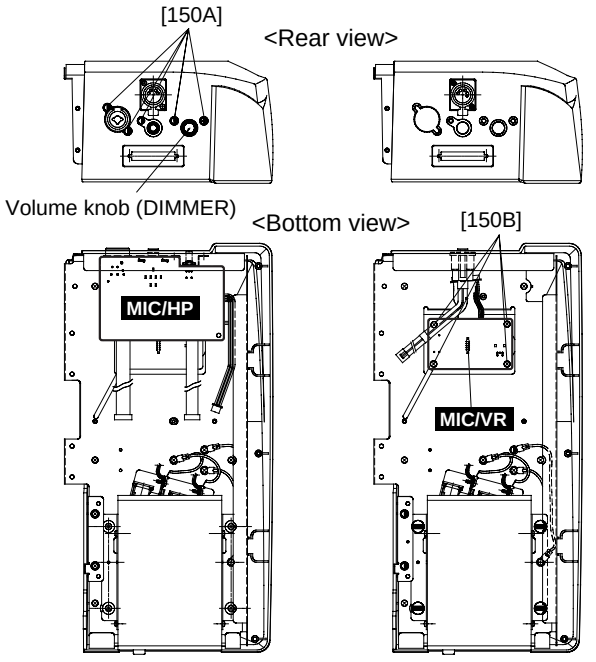

[150]: Bind Head Tapping Screw-B 3.0X8 MFZN2BL (EP600190)

(Fig. 4)

8. PN4 Circuit Board (Time required: About 20 min.)

8-1 Remove the bottom assembly. (See procedure 1.)

8-2 Remove the AM circuit board. (See procedure 2.)

8-3 Remove the power supply assembly. (See procedure 2.)

8-4 Remove the six (6) screws marked [750A]. The PN4 circuit board can then be removed. (Fig. 7)

9. DJACK and INV Circuit Boards and LCD

9-1 Remove the bottom assembly. (See procedure 1.)

9-2 Remove the DA circuit board. (See procedure 3.)

9-3 Remove the DM and TG circuit boards. (See procedure 4.)

9-4 **DJACK Circuit Board (Time required: About 25 min.) :**
Remove the ten (10) screws marked [750B]. The DJACK circuit board can then be removed. (Fig.7)

9-5 **INV Circuit Board (Time required: About 20 min.) :**
Remove the four (4) screws marked [70B]. The INV circuit board and the INV cover can then be removed. (Fig.7)

9-6 **LCD (Time required: About 25 min.) :**
Remove the screw marked [800] and the four (4) screws marked [750C]. The LCD assembly can then be removed. (Fig.7)
Remove the four (4) screws marked [70C]. The LCD can then be removed from the LCD holder. (Fig.8)

• Power Supply Assembly

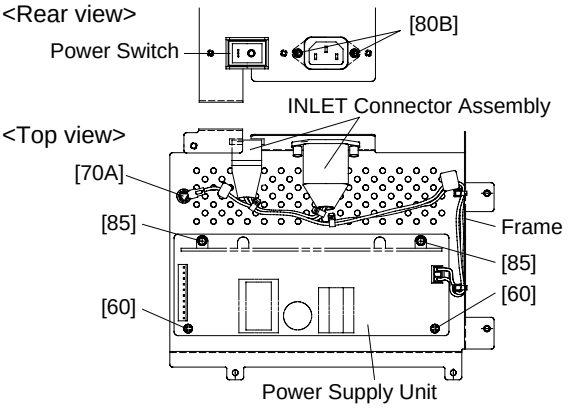

[60]: Bind Head Tapping Screw-B 3.0X6 MFZN2Y (EP600130)
[70A]: Bind Head Tapping Screw-B 4.0X8 MFZN2BL (EG340190)
[80B]: Bonding Tapping Screw-B 3.0X8 MFZN2BL (VN413300)
[85]: B ind Head Tapping Screw-B 3.0X8 MFZN2Y (EP600250)

(Fig. 5)

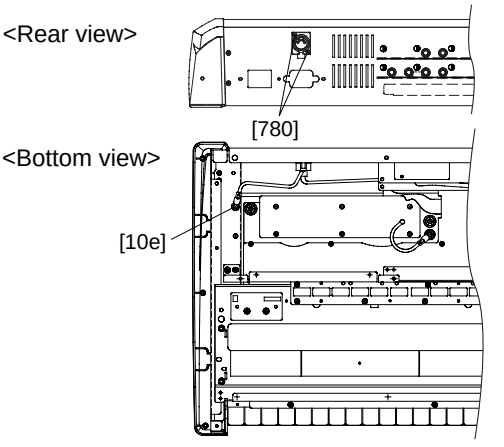

[10e]: Bind Head Tapping Screw-B 3.0 X 6 MFZN2Y (EP600130)
[780]: Pan Head Screw 2.5 X 6 MFZN2BL (VS206600)

(Fig. 6)

10. AJACK2 and AJACK Circuit Boards
(Time required: About 25 minutes each)

10-1 Remove the bottom assembly. (See procedure 1.)

10-2 Remove the AM circuit board. (See procedure 2.)

10-3 Remove the DA circuit board. (See procedure 3.)

10-4 Remove the DM and TG circuit boards. (See procedure 4.)

10-5 **AJACK2 Circuit Board:**
Remove the three (3) screws marked [750D]. The AJACK2 circuit board can then be removed. (Fig.7)

10-6 **AJACK Circuit Board:**
Remove the eight (8) screws marked [750E]. The AJACK circuit board can then be removed. (Fig.7)

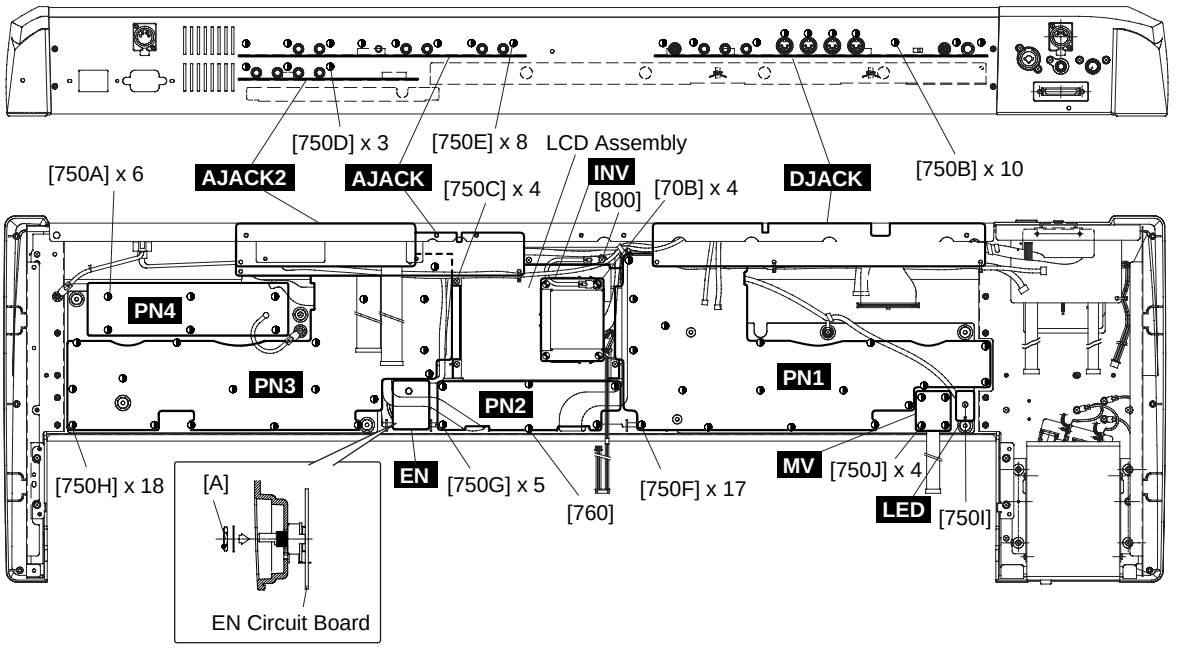

[70B]: Bind Head Tapping Screw-B 3.0 X 6 MFZN2BL (EP600230)
[750]: Bind Head Tapping Screw-B 3.0 X 8 MFZN2BL (EP600190)
[760]: Bind Head Tapping Screw-B 3.0 X 6 MFZN2Y (EP600130)
[800]: Bonding Tapping Screw-B 3.0 X 8 MFZN2BL (VN413300)

(Fig. 7)

• LDC Assembly

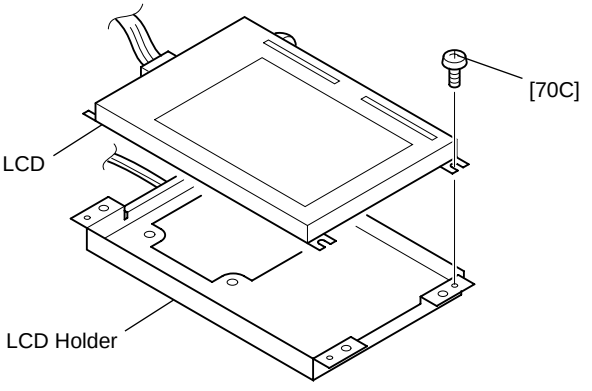

[70C]: Bind Head Tapping Screw-B 3.0 X 6 MFZN2BL (EP600230)

(Fig. 8)

11. Keyboard Assembly

(Time required: About 30 minutes)

11-1 Remove the bottom assembly. (See procedure 1.)

11-2 Remove the AM circuit board. (See procedure 2.)

11-3 Remove the power supply assembly. (See procedure 2.)

11-4 Remove the DA circuit board. (See procedure 3.)

11-5 Remove the DM and TG circuit boards. (See procedure 4.)

11-6 Remove the four (4) screws marked [300B] and the three (3) screws marked [310C]. The keyboard assembly can then be removed with the center angle bracket and the keyboard supports. (Fig. 9)

11-7 Remove the twelve (12) screws marked [320E]. The center angle bracket and the three (3) keyboard supports can then be removed from the keyboard assembly. (Fig. 9)

11-8 Remove the five (5) screws marked [320F]. The key slip can then be removed from the keyboard assembly. (Fig. 9)

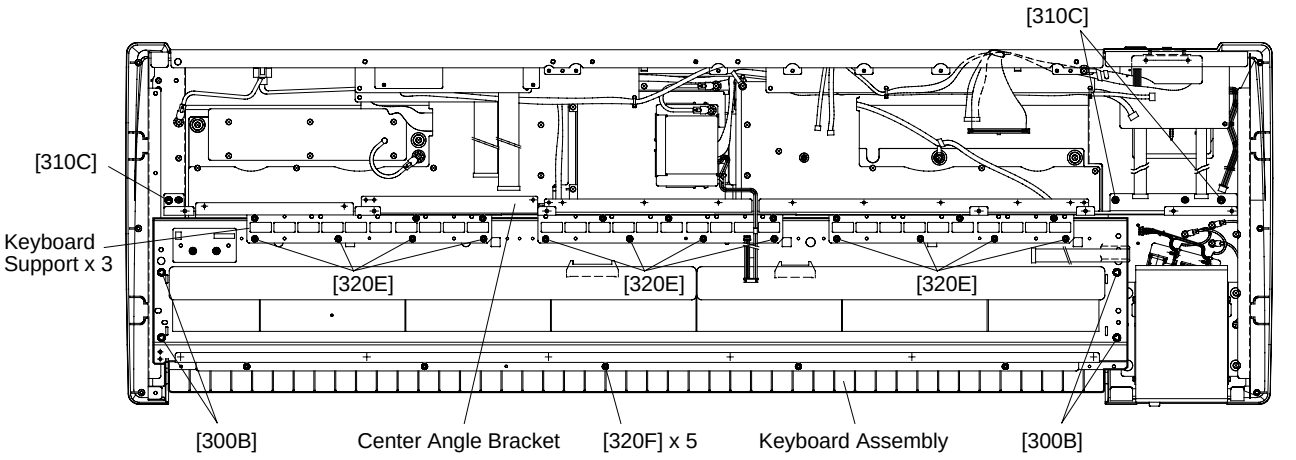

[300B]: Bonding Tapping Screw-B 4.0X10 MFZN2BL (VJ254100)
[310C]: Bind Head Tapping Screw-B 3.0X8 MFZN2BL (EP600190)
[320]: Bind Head Tapping Screw-B 3.0X6 MFZN2Y (EP600130)

(Fig. 9)

12. PN1, PN2, PN3, LED, MV and EN Circuit Boards

12-1 Remove the bottom assembly. (See procedure 1.)
12-2 Remove the AM circuit board. (See procedure 2.)
12-3 Remove the power supply assembly. (See procedure 2.)
12-4 Remove the DA circuit board. (See procedure 3.)
12-5 Remove the DM and TG circuit boards. (See procedure 4.)
12-6 Remove the keyboard assembly. (See procedure 2.)
12-7 **PN1 Circuit Board (Time required: About 35 min.) :**
Remove the seventeen (17) screws marked [750F]. The PN1 circuit board can then be removed. (Fig.7)
12-8 **PN2 Circuit Board (Time required: About 30 min.) :**
Remove the five (5) screws marked [750G] and the screw marked [760]. The PN2 circuit board can then be removed. (Fig.7)
12-9 **PN3 Circuit Board (Time required: About 35 min.) :**
Remove the AJACK circuit board. (See procedure 10-6.)
Remove the eighteen (18) screws marked [750H]. The PN3 circuit board can then be removed. (Fig.7)
12-10 **LED Circuit Board (Time required: About 30 min.) :**
Remove the screw marked [750I]. The LED circuit board can then be removed. (Fig.7)
12-11 **MV Circuit Board (Time required: About 30 min.) :**
Pull out the V-knob (MASTER VOLUME) from the control panel side.
Remove the four (4) screws marked [750J]. The MV circuit board can then be removed. (Fig.7)
12-12 **EN Circuit Board (Time required: About 30 min.) :**
Pull out the encoder knob and then remove the hexagonal nut from the control panel side. The EN circuit board can then be removed. (Fig.7)

13. FDD (Time required: About 30 min.)

13-1 Remove the bottom assembly. (See procedure 1.)
13-2 Remove the AM circuit board. (See procedure 2.)
13-3 Remove the power supply assembly. (See procedure 2.)
13-4 Remove the DA circuit board. (See procedure 3.)
13-5 Remove the DM and TG circuit boards. (See procedure 4.)
13-6 Remove the keyboard assembly. (See procedure 11.)
13-7 Remove the four (4) screws marked [160] and the screw marked [90]. The FDD assembly can then be removed. (Fig. 10)
13-8 Remove the four (4) screws marked [40]. The FDD holders (L,R) can then be removed from the FDD. (Fig. 11)

<Bottom view>

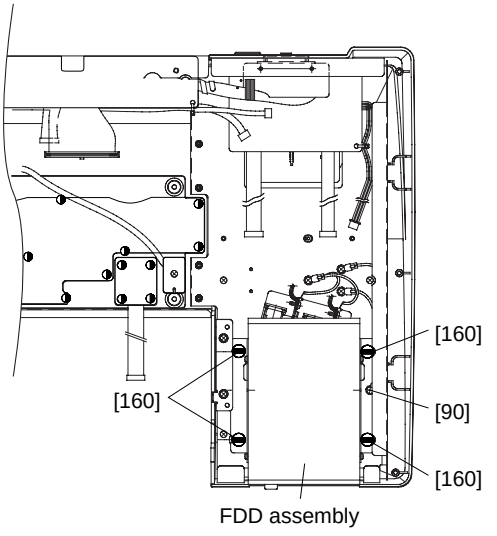

• FDD Assembly

<Right side view>

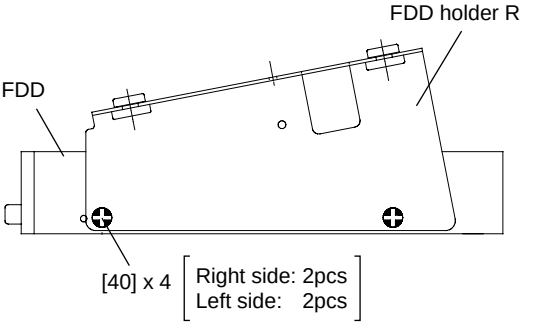

[40]: Bonding Head Screw 3.0X10 MFNI33 (VK712400)

(Fig. 11)

[90]: Bind Head Tapping Screw-B 3.0X8 MFZN2BL (EP600190)
[160]: Oval Head Screw 3.0X10 (V5115200)

(Fig. 10)

14. Wheel Assembly (Time required: About 30 min.)

14-1 Remove the bottom assembly. (See procedure 1.)
14-2 Remove the AM circuit board. (See procedure 2.)
14-3 Remove the power supply assembly. (See procedure 2.)
14-4 Remove the DA circuit board. (See procedure 3.)
14-5 Remove the DM and TG circuit boards. (See procedure 4.)
14-6 Remove the keyboard assembly (See procedure 11.)
14-7 Remove the FDD assembly. (See procedure 13.)
14-8 Remove the six (6) screws marked [150C]. The wheel assembly can then be removed. (Fig. 12)

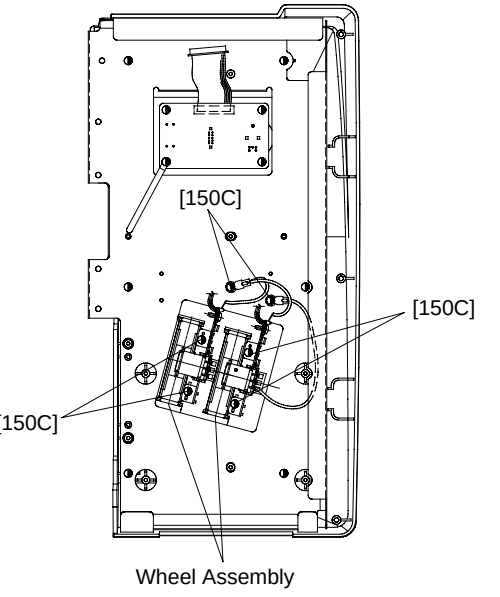

[150C]: Baind Head Tapping Screw-B 3.0X8 MFZN2BL (EP600190)

(Fig. 12)

INSTALLING OPTIONAL HARDWARE

The following optional units can be installed to the 9000Pro.

- **Plug-in Boards**

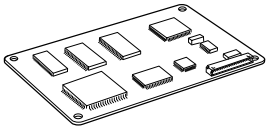

- **Hard disk unit**

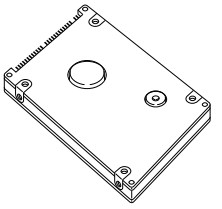

- **SIMM**

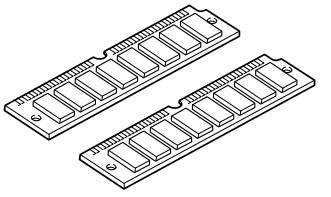

Before installing the optional hardware, make sure you have a Philips screwdriver.

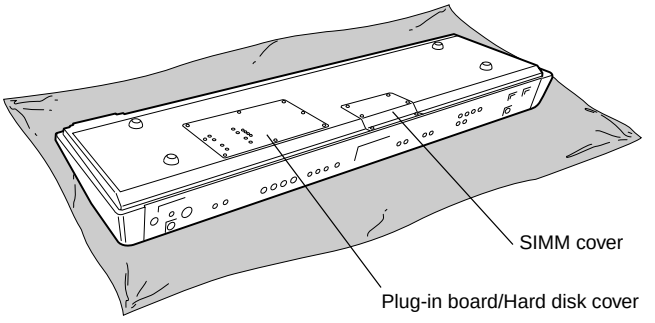

Installation Precautions

⚠ *WARNING*

- ***Before beginning installation, switch off the power to the 9000Pro and connected peripherals, and unplug them from the power outlet. Then remove all cables connecting the 9000Pro to other devices. (Leaving the power cord connected while working can result in electric shock. Leaving other cables connected can interfere with work.)***
- ***Be careful not to drop any screws inside the instrument during installation (this can be prevented by keeping the Plug-in Board, hard disk unit and cover away from the instrument while attaching). If this does happen, be sure to remove the screw(s) from inside the unit before turning the power on. Loose screws inside the instrument can cause improper operation or serious damage.***
- ***Install the Plug-in boards, the hard disk unit, and the SIMM modules carefully as described in the procedure below. Improper installation can cause shorts which may result in irreparable damage and pose a fire haz-ard.***
- ***Do not disassemble, modify, or apply excessive force to board areas and connectors on Plug-in boards/hard disk/SIMMs. Bending or tampering with boards and connectors may lead to electric shock, fire, or equipment failures.***

⚠ *CAUTION*

- ***Before handling the Plug-in boards/hard disk unit /SIMMs, you should briefly touch the metal surface to which the Plug-in board/hard disk or SIMM cover is attached (or other such metallic area — be careful of any sharp edges) with your bare hand so as to drain off any static charge from your body. Note that even a slight amount of electrostatic discharge may cause damage to these components.***
- ***It is recommended that you wear gloves to protect your hands from metallic projections on the Plug-in boards, Hard disk unit, SIMMs, and other components. Touching leads or connectors with bare hands may cause finger cuts, and may also result in poor electrical contact or electrostatic damage.***
- ***Handle the Plug-in boards/Hard disk unit/SIMM with care. Dropping or subjecting them to any kind of shock may cause damage or result in a malfunction.***
- ***Be careful of static electricity. There are times when static electricity affects the IC chips on the Plug-in board. Before you lift the optional Plug-in board, to reduce the possibility of static electricity, touch the metal parts other than the painted area or a ground wire on the devices that are grounded.***
- ***Do not touch the exposed metal parts in the circuit board. Touching these parts may result in a faulty contact.***
- ***When moving a cable, be careful not to let it catch on the circuit Plug-in board. Forcing the cable in anyway may cut the cable, cause damage, or result in a malfunction.***
- ***Be careful not to misplace any of the screws since all of them are used.***
- ***Do not use any screws other than what are installed on the instrument.***

[A] Optional Plug-in Board Installation

The following types of Plug-in boards can be used with the 9000 Pro.

- PLG150-AN
- PLG100-VL
- PLG100-DX
- PLG100-XG
- PLG150-PF
- PLG150-VL
- PLG150-DX

⚠ *CAUTION*

- ***When inserting Plug-in boards and connecting cables, make sure that you check that they are inserted and connected properly. Improperly inserted Plug-in boards and cables may cause faulty contacts and an electrical short circuit which may cause damage or result in a malfunction.***
- ***After mounting the Plug-in board, be sure to tighten the screws as directed so it is completely stable and does not move in any way.***

1 **Turn the 9000Pro power off, and disconnect the AC power cord. Also, if the keyboard is connected with other external device(s), disconnect the device(s).**

2 **Turn the 9000Pro face down on a blanket or some soft surface, giving you direct access to the bottom of the instrument.**

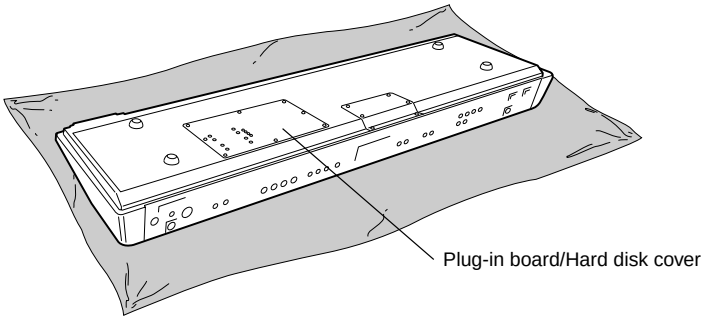

3 **Move to a position facing the front panel of the keyboard, and remove the eight screws from the Plug-in board/Hard disk cover with a Phillips screwdriver. Do not remove the other screws.**

NOTE

- *Keep the removed (8) screws in a safe place. They will be used when attaching the Plug-in board/Hard disk cover to the keyboard again.*

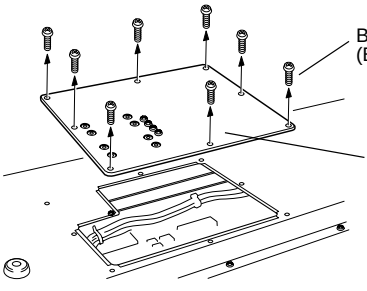

4 **Remove the Plug-in board/Hard disk cover.**

⚠ *WARNING*

- ***In order not to drop any screws inside the 9000Pro, keep the Plug-in Board and cover away from the 9000Pro in the following steps #5 - #7.***

5 Turn over the Plug-in board/Hard disk cover.

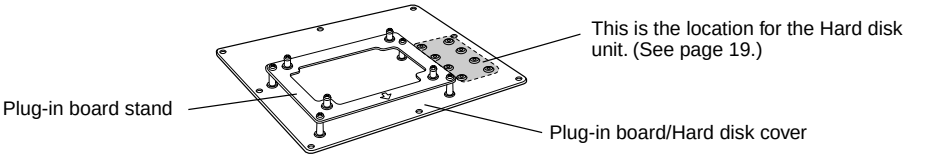

6 Attach the Plug-in Board to the Plug-in board stand. ..... First board

6-[1] Remove the four screws from the Plug-in stand with a Phillips screwdriver. Do not remove the other screws.

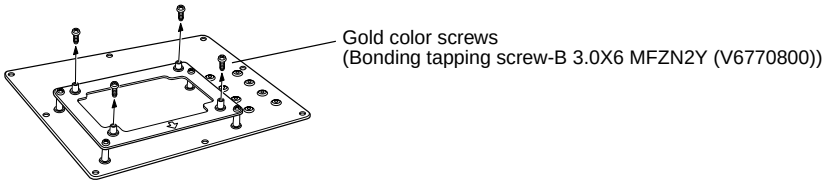

6-[2] Attach the Plug-in board to the Plug-in board stand using the four screws removed in the previous step (6-[1]).

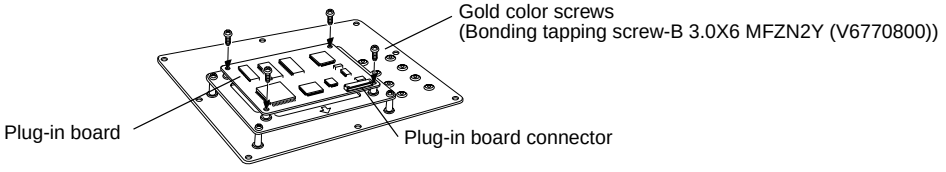

If you are installing a second board, go on to step #7 below. If you are installing only one board, go on to step #8.

7 As required, attach another Plug-in board to the Plug-in board stand. .... Second board

7-[1] Remove the four screws from the Plug-in stand and remove the Plug-in stand from the cover. Do not remove the other screws.

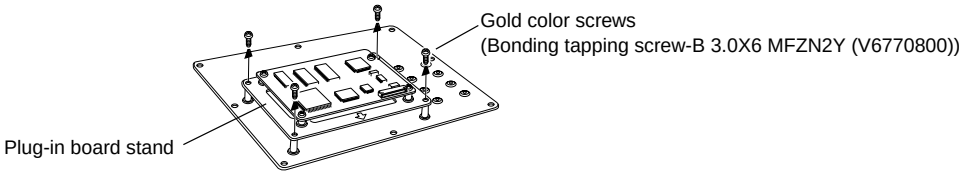

7-[2] Attach another Plug-in board by turning over the Plug-in board stand and using the same operations in steps 6-[1] and 6-[2].

When turning over the board, let it rest on a soft surface.

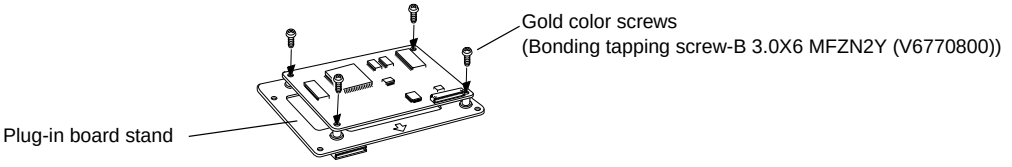

7-[3] Attach the Plug-in board stand to the Plug-in board/Hard disk cover with the four screws removed in step 7-[1].

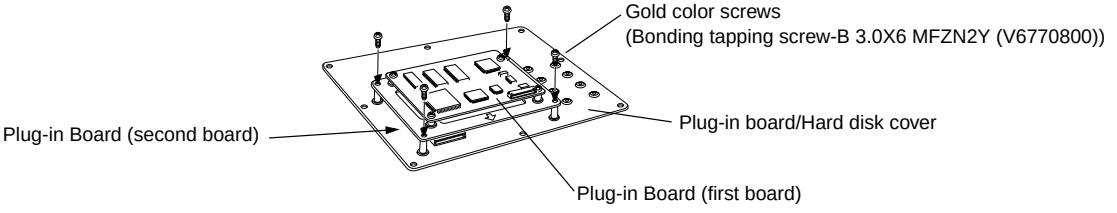

8 Unfasten the cable inside the 9000Pro as shown in the following illustration.

There are three cables available for installation. The two smaller cables are used for the Plug-in Boards; the larger cable is for the hard disk.

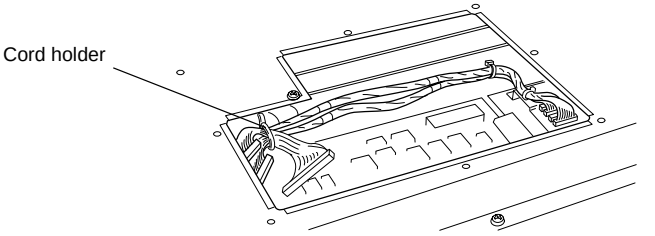

9 Carefully plug the cable connector into the Plug-in board connector until the two notches on the cable connector lock into the sockets on the board as shown in the illustration.

The two cables can be used interchangeably. The cable that is used determines the slot number used by the 9000Pro. The cable with the single orange cord corresponds to Slot 1. The cable with the yellow cord corresponds to Slot 2. Keep in mind that the slot number is determined by the cable, not the actual installation position of the board.

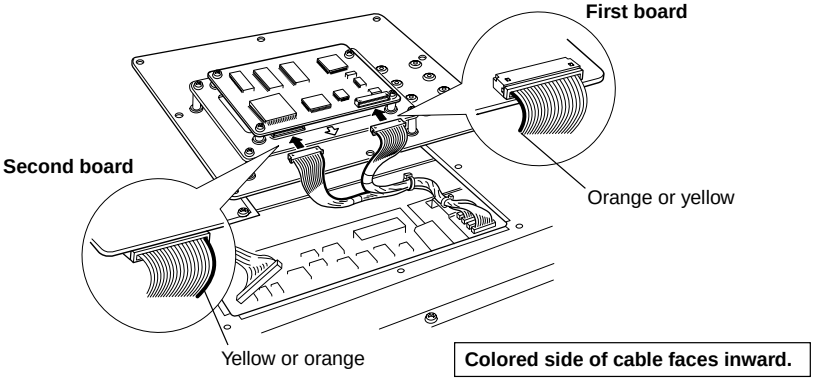

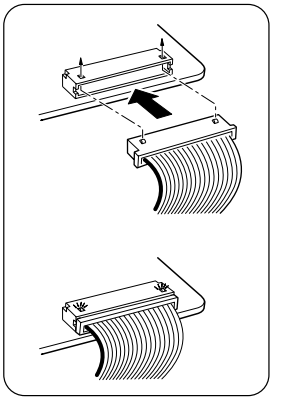

10 Attach the Plug-in board/Hard disk cover to the 9000Pro.

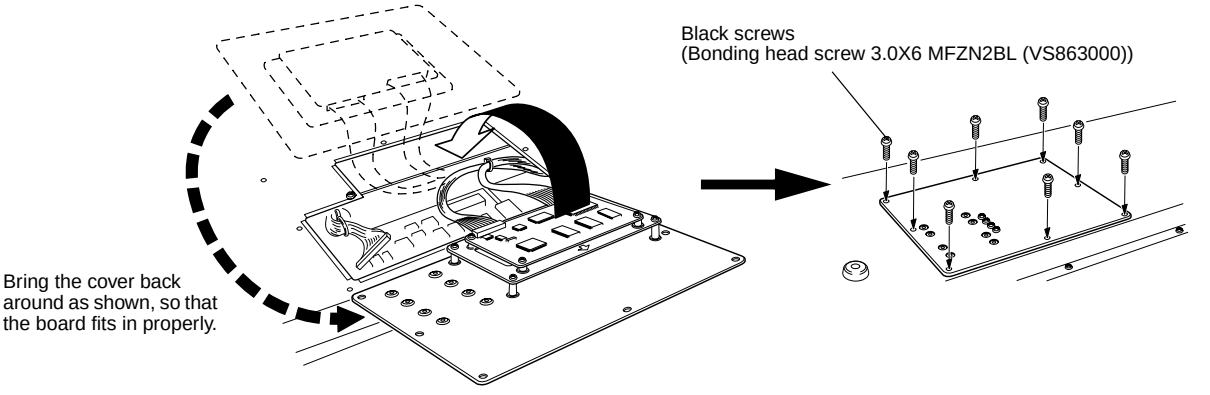

11 Check that the installed Plug-in board is functioning properly.

Turn on the power.

- A message appears indicating that the installed Plug-in Board is being initialized. The main display then appears, indicating that the board has been successfully installed.
- If an error message appears, the 9000Pro freezes after a while, indicating that the installation was not successful. If this happens, turn off the power and carefully go through the installation procedure again.
- If you cannot select a Plug-in Voice even though no error message appears, the board has probably not been connected. If this happens, turn off the power and make sure that the Plug-in Board is securely connected.

[B] Optional Hard Disk Installation

The hard disk used must be a 2.5-inch IDE-compatible; however, not all such drives may be installable.

⚠ *CAUTION*

- ***When inserting hard disk unit and connecting cables, make sure that you check that they are inserted and connected properly. Improperly inserted hard disk unit and cables may cause faulty contacts and an electrical short circuit which may cause damage or result in a malfunction.***
- ***After mounting the hard disk unit, be sure to tighten the screws as directed so it is completely stable and does not move in any way.***

NOTE

- *Hard disk drives of a maximum 8 GB capacity can be formatted; however, the maximum partition size is 2 GB. For example, an 8 GB hard disk drive would have to be formatted into four separate 2 GB partitions.*
- *Hard disk drives of a capacity greater than 8 GB can be installed; however, the 9000Pro is capable of formatting only up to a maximum 8 GB on the drive.*
- *Hard disk drives wider than 12.7 mm cannot be installed to the 9000Pro.*

1-4 Use the same operation as in "Optional Plug-in Board Installation" (page 16).

⚠ *WARNING*

- ***In order not to drop any screws inside the 9000Pro, keep the Plug-in Board and cover away from the 9000Pro in the following steps #5 - #8.***
  If the Plug-in Board has been installed, pull out the cable connector from the Plug-in Board connector.

5 Remove the four screws from the Plug-in board/Hard disk cover.

6 Turn over the Plug-in board/Hard disk cover.

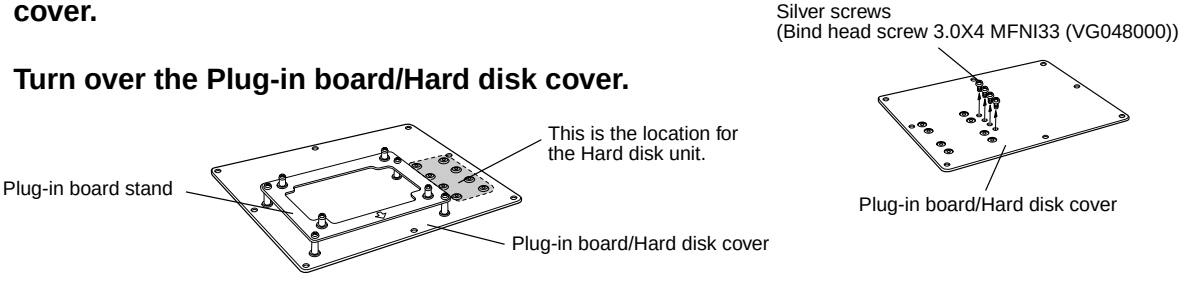

If a Plug-in Board (or boards) is installed, make sure to disconnect the Plug-in Board connector(s) before continuing.

7 Hold the hard disk unit in place with your hand as shown below. Make sure that the socket end of the unit faces toward you as shown.

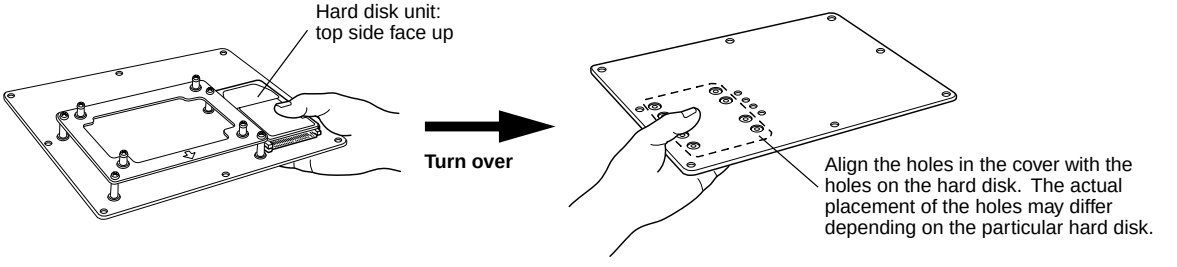

8 Attach the hard disk unit to the Plug-in board/Hard disk cover using the four screws removed in step 5.

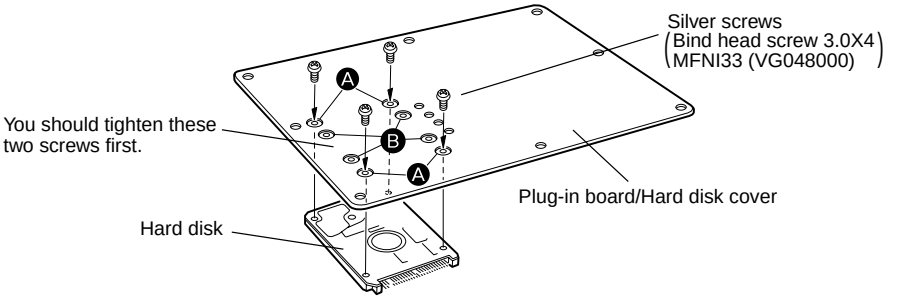

NOTE

- *Depending on the type of hard disk drive you plan to install, select holes (A) or holes (B) to attach the hard disk drive.*

** Holes (A) are used in this illustration.*

9 Turn the cover over again, and attach the cable connector as shown.

Undo the cable clip (to the large cable), and plug it into the hard disk socket.

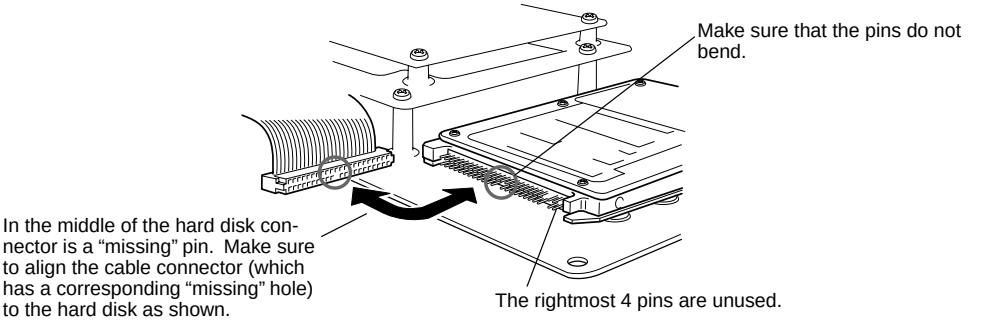

Re-attach the Plug-in Board cable(s) if necessary.

10 Attach the Plug-in board/Hard disk cover to the 9000Pro (page 18).

11 Check that the installed hard disk is functioning properly.

Turn on the power, go to the DISK display, and execute the Format Hard Disk function. If the format is completed with no trouble, the hard disk is OK.

[C] Optional SIMM Installation

The SIMMs used must meet the following minimum specifications, but this does not guarantee that they will work properly with the 9000Pro. Make sure to install the SIMMs in pairs only; also make sure that both modules of the pair are of the same type and memory capacity, and are from the same manufacturer.

- *16-bit bus compatibility or compliance with JEDEC standards (SIMMs which are only compatible with 32-bit buses can not be used)*
- *70 nanoseconds or faster access time (note: 60 nanosecond SIMMs are faster than 70 nanosecond SIMMs).*
- *No more than 18 memory chips on each SIMM module.*
- *SIMM modules must be no more than 25.4 mm in height and the thickness of the SIMM should not exceed 8mm on either side when measured from the center of the SIMM. See below.*
- *SIMMs with parity and EDO DRAM modules can also be used.*
- *Use only SIMMs of 4-, 8-, 16-, or 32-megabyte capacity.*

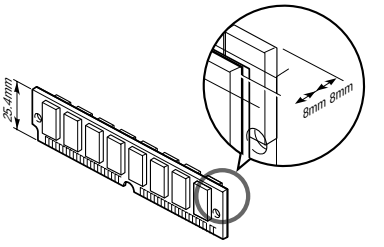

1-2 **Use the same operation as in "Optional Plug-in Board Installation" (page 16).**

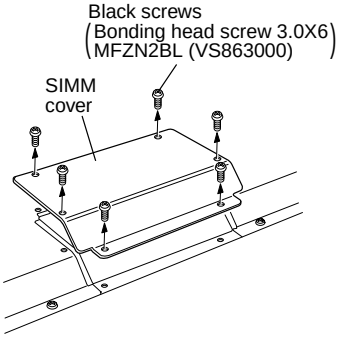

3 **Move to a position facing the rear panel of the keyboard, and remove the six screws from the SIMM cover with a Phillips screwdriver. Do not remove the other screws.**

4 **Remove the SIMM cover.**

5 **Insert the SIMMs in the SIMM slots as described below.**

First SIMM

5-[1] **Make sure the orientation is correct. Make sure that the cutout on the SIMM module is aligned with the protruding "key" on the connector slot.**

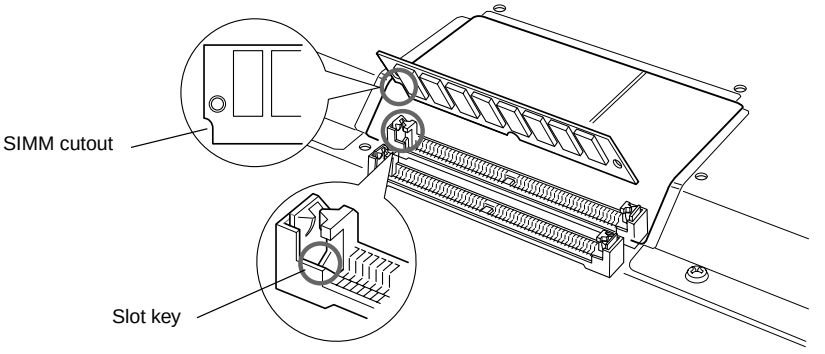

⚠ *CAUTION*

- ***Do not install the SIMM backwards.***

5-[2] **Install the first SIMM in the rear slot (the slot closest to the 9000Pro rear panel), inserting it at an angle as shown in the illustration.**
Make sure that the parts at locations A, B, and C are properly aligned.

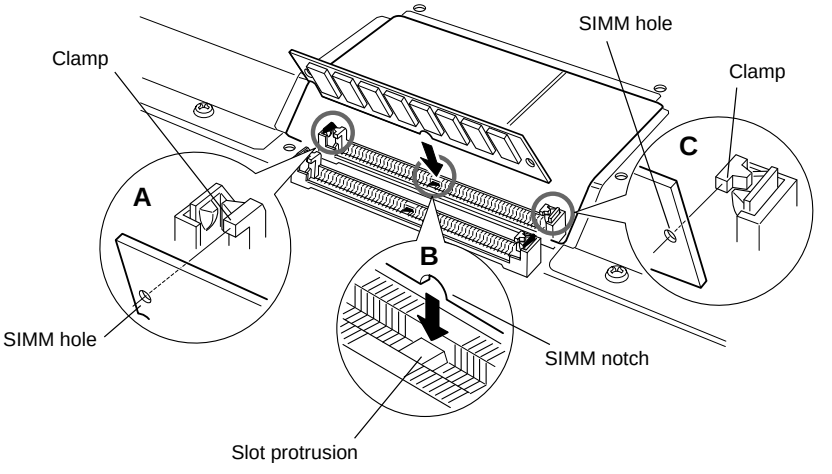

⚠ *CAUTION*

- ***Make sure that the entire length of the SIMM is evenly inserted.***

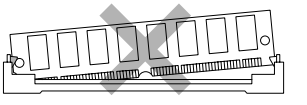

5-[3] Holding both edges of the SIMM module, raise it to the vertical position until it firmly locks in place with the left and right clamps.

⚠ CAUTION

- ***Make sure that the entire length of the SIMM is evenly inserted.***

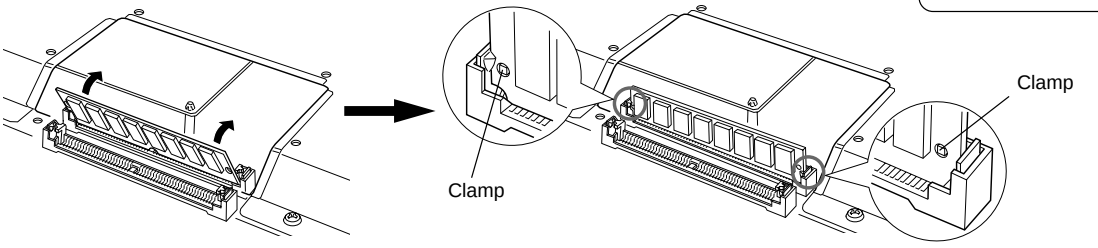

Second SIMM

5-[4] After confirming the orientation, insert the second SIMM into the front slot (the slot closest to the 9000Pro keyboard), and raise it to the vertical position in the same way as the first SIMM.

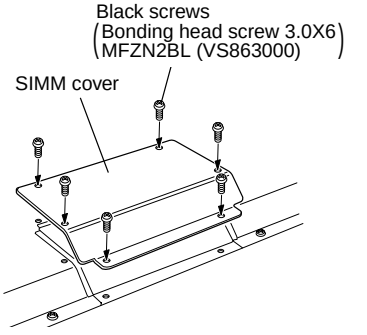

6 Replace the SIMM cover and attach it to the 9000Pro with the six screws.

7 Check that the installed SIMMs are functioning properly.

Set the 9000Pro right-side up, and connect the power cord to the rear-panel AC INLET jack and an AC outlet.

Turn on the power, go to the SAMPLING display, and check that the REMAIN TIME value matches the amount of installed memory, as follows:

- 4MB x 2 106.9s
- 8MB x 2 202.1s
- 16MB x 2 392.3s
- 32MB x 2 772.7s
- No SIMMS 11.8s

(These values apply when there is no data in the wave memory.)

NOTE

- *Although the wave memory of the 9000Pro can be expanded to 65 megabytes, the maximum size of a single sample recording is 32 mega bytes (380 sec.).*

■ Removing SIMMs

SIMM modules can be removed after opening the clamps at both ends of the connector slot.

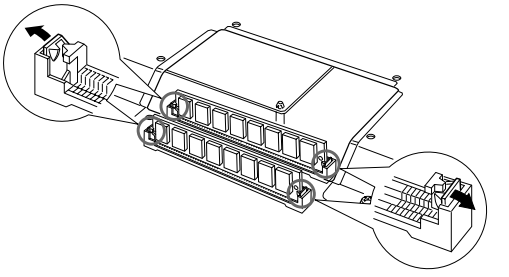

LSI PIN DESCRIPTION

HD63B01Y0RCE0F (XM234A00) CPU (PKS) 24
HD6437043AE00F (XW795A00) CPU 25
TC203C760HF-002 (XS725A00) SWP30B
(AWM Tone Generator coped with MEG) Standard Wave Processor 26
YSS236-F (XT013A00) VOP3 27
SPC7214F0B (XY625A00) SCSI Control 28
AK5351-VF-E2 (XV510A00) ADC (Analog to Digital Converter) 28
D65621GF-028-3B9 (XS370A00) SMI 29
MBCG46183-129 (XV833A00) Gate Array 29
HD63266F (XI939A00) FDC (Floppy Disk Controller) 30
JG760082A (XV481B00) Gate Array (Video Out) 30
SED1335F0B (XQ595A00) LCDC (LCD Controller) 31
PCM1716E (XU829A00) DAC (Digital to Analog Converter) 31
MSM82C51A-2GS-K (XV513A00) USART
(Universal Synchronous Asynchronous Receiver Transmitter) 31
SLA904FF1T (XW154A00) PIF32 (Pararel Interface) 32
PCM1702U/2K (XP551A00) DAC (Digital to Analog Converter) 32
MN101C027YB (XS711200) CPU 33

● **HD63B01Y0RCE0F** (XM234A00) **CPU** (PKS)

DM: IC037

PIN NO.	NAME	I/O	FUNCTION	PIN NO.	NAME	I/O	FUNCTION
1	/NMI	I	Non-maskable interrupt	33	M1/S8	I	Make contact of key receive/ Switch receive
2	E	O		34	M0/S7	I	
3	D#	O		35	Vss		Ground
4	D	O	Key scan drive	36	F	O	
5	C#	O		37	F#	O	
6	CL	O		38	G	O	
7	PULL 1			39	G#	O	
8	PULL 2			40	A	O	Key scan drive
9	LC.AE//FS	I	connected to ground	41	A#	O	
10	/REPEAT	I	Auto repeat (L:on, H:off)	42	B	O	
11	/KOF-REQ	I	Key off request	43	C	O	
12	SW1	I	Switch 1 (L: on, H: off)	44	LC//AE	I	connected to +5V
13	SW2	I	Switch 2 (L: on, H: off)	45	B6/S6	I	
14	/IS	I	Input strobe	46	B5/S5	I	
15	/OS	I	Output strobe	47	B4/S4	I	
16	SW3	I	Switch 3 (L: on, H: off)	48	B3/S3	I	Break contact of key receive/ Switch receive
17	SW4	I	Switch 4 (L: on, H: off)	49	B2/S2	I	
18	DOUT0	O		50	B1/S1	I	
19	DOUT1	O		51	B0/S0	I	
20	DOUT2	O		52	Se	O	
21	DOUT3	O		53	Sd	O	
22	DOUT4	O	Data output	54	Sc	O	Switch drive
23	DOUT5	O		55	Sb	O	
24	DOUT6	O		56	Sa	O	
25	DOUT7	O		57	E		Not used
26	Vcc		Power supply (+5V)	58	Vss		Ground
27	Sf	O	Switch drive	59	XTAL		Not used
28	M5/S13	I		60	EXTAL	I	8 MHz clock
29	M4/S12	I		61	MP0	I	Mode program 0
30	M3/S10	I	Make contact of key receive/ Switch receive	62	MP1	I	Mode program 1
31	M2/S9	I		63	/RES	I	Initial clear
32	M1/S8	I		64	/STBY	I	Stanby-mode signal

• **HD6437043AE00F** (XW795A00) **CPU**

DM: IC001, TG: IC001

PIN No.	NAME	I/O	FUNCTION	PIN No.	NAME	I/O	FUNCTION
1	/WRHH	O	HH write	73	D15	I/O	Data bus
2	DACK0	O	DAM transfer strobe	74	D14	I/O	
3	/WRHL	O	HL write	75	D13	I/O	
4	/CASHH	O	HH Column address strobe	76	D12	I/O	
5	PE15	I/O	Port E	77	VCC	I	Power supply
6	VSS	I	Ground	78	D11	I/O	Data bus
7	A0	O	Address bus	79	VSS	I	Ground
8	A1	O		80	D10	I/O	Data bus
9	A2	O		81	D9	I/O	
10	A3	O		82	D8	I/O	
11	A4	O		83	D7	I/O	
12	VCC	I	Power supply	84	D6	I/O	
13	A5	O	Address bus	85	VCC	I	Power supply
14	VSS	I	Ground	86	D5	I/O	Data bus
15	A6	O	Address bus	87	VSS	I	Ground
16	A7	O		88	D4	I/O	Data bus
17	A8	O		89	D3	I/O	
18	A9	O		90	D2	I/O	
19	A10	O		91	D1	I/O	
20	A11	O		92	D0	I/O	
21	A12	O		93	VSS	I	Ground
22	A13	O		94	XTAL	I	Crystal oscillator
23	A14	O		95	MD3	I	Mode select
24	A15	O		96	EXTAL	I	Crystal oscillator
25	A16	O		97	MD2	I	Mode select
26	VCC	I	Power supply	98	NMI	-	Non-maskable interrupt
27	A17	O	Address bus	99	VCC	I	Power supply
28	VSS	I	Ground	100	PA16	I/O	Port A
29	/CASHL	O	HL Column address strobe	101	PA17	I/O	Port A
30	PA19	I/O	Port A	102	MD1	I	Mode select
31	/RAS	O	Row address strobe	103	MD0	I	Mode select
32	/CASL	O	Column address strobe (low)	104	PLLVCC	I	PLL Power supply
33	PA18	I/O	Port A	105	PLLCAP	I	PLL capacitor
34	/CASH	O	Column address strobe (high)	106	PLLVSS	I	PLL Ground
35	VSS	I	Ground	107	PA15	I/O	Port A
36	RDWR	O	DRAM read/write	108	/RES	I	Reset
37	A18	O	Address bus	109	/DREQ0	I	DMA transfer request
38	A19	O		110	TIOC0B	I/O	MTU input capture/output comp
39	A20	O		111	PE2	I/O	Port E
40	VCC	I	Power supply	112	VCC	I	Power supply
41	A21	O	Address bus	113	PE3	I/O	Port E
42	VSS	I	Ground	114	PE4	I/O	
43	/RD	O	Read	115	PE5	I/O	
44	/WDTOVF	O	Watch dog timer overflow	116	PE6	I/O	
45	D31	I/O	Data bus	117	VSS	I	Ground
46	D30	I/O	Data bus	118	AN0	I	Analog input
47	/WRH	O	High write	119	AN1	I	
48	/WRL	O	Low write	120	AN2	I	
49	/CS1	O	Chip select	121	AN3	I	
50	/CS0	O	Chip select	122	PF4	I/O	Port F
51	/IRQ3	I	Interrupt request	123	PF5	I/O	Port F
52	/IRQ2	I	Interrupt request	124	AVSS	I	Analog qround
53	/CS3	O	Chip select	125	PF6	I/O	Port F
54	/CS2	O	Chip select	126	PF7	I/O	Port F
55	VSS	I	Ground	127	AVREF	I	Analog reference Voltage
56	D29	I/O	Data bus	128	AVCC	I	Analog power supply
57	D28	I/O		129	VSS	I	Ground
58	D27	I/O		130	RxDO	I	Receive data
59	D26	I/O		131	TxDO	O	Transmit data
60	D25	I/O		132	/IRQ1	I	Interrupt request
61	VSS	I	Ground	133	RxD1	I	Receive data
62	D24	I/O	Data bus	134	PA4	I/O	Port A
63	VCC	I	Power supply	135	VCC	I	Power supply
64	D23	I/O	Data bus	136	SCK1	I/O	Serial clock
65	D22	I/O		137	PE7	I/O	Port E
66	D21	I/O		138	PE8	I/O	
67	D20	I/O		139	PE9	I/O	
68	D19	I/O		140	PE10	I/O	
69	D18	I/O		141	VSS	I	Ground
70	D17	I/O		142	TIOC3D	I/O	MTU input capture/output comp
71	VSS	I	Ground	143	PE12	I/O	Port EPort E

● **TC203C760HF-002** (XS725A00) **SWP30B** (AWM Tone Generator coped with MEG) Standard Wave Processor

TG: IC005, 007

PIN NO.	NAME	I/O	FUNCTION	PIN NO.	NAME	I/O	FUNCTION
1	Vss		(Ground)	121	VSS		(Ground)
2	CA0	I	Address bus of internal register	122	HMD0	I/O	Wave memory data bus (Upper 16 bits)
3	CA1	I		123	HMD1	I/O	
4	CA2	I		124	HMD2	I/O	
5	CA3	I		125	HMD3	I/O	
6	CA4	I		126	HMD4	I/O	
7	CA5	I		127	HMD5	I/O	
8	CA6	I		128	HMD6	I/O	
9	CA7	I		129	HMD7	I/O	
10	CA8	I		130	HMD8	I/O	
11	CA9	I		131	HMD9	I/O	
12	CA10	I		132	HMD10	I/O	
13	CA11	I		133	HMD11	I/O	
14	VSS		(Ground)	134	HMD12	I/O	
15	CD0	I/O	Data bus of internal register	135	HMD13	I/O	
16	CD1	I/O		136	HMD14	I/O	
17	CD2	I/O		137	HMD15	I/O	
18	CD3	I/O		138	VSS		(Ground)
19	CD4	I/O		139	HMA0	O	Wave memory address bus
20	CD5	I/O		140	HMA1	O	
21	CD6	I/O		141	HMA2	O	
22	CD7	I/O		142	HMA3	O	
23	CD8	I/O		143	HMA4	O	
24	CD9	I/O		144	HMA5	O	
25	CD10	I/O		145	HMA6	O	
26	CD11	I/O		146	HMA7	O	
27	CD12	I/O		147	HMA8	O	
28	CD13	I/O		148	HMA9	O	
29	CD14	I/O		149	HMA10	O	
30	VDD		(Power supply)	150	VDD		(Power supply)
31	VSS		(Ground)	151	VSS		(Ground)
32	CD15	I/O		152	HMA11	O	
33	CSN	I	Chip select	153	HMA12	O	
34	WRN	I	Write strobe	154	HMA13	O	
35	RDN	I	Read strobe	155	HMA14	O	
36	VDD		(Power supply)	156	HMA15	O	
37	SYSH0	O	NSYS/LNSYS upper 16 bits output	157	HMA16	O	
38	SYSH1	O		158	HMA17	O	
39	SYSH2	O		159	HMA18	O	
40	SYSH3	O		160	HMA19	O	
41	SYSH4	O		161	HMA20	O	
42	SYSH5	O		162	HMA21	O	
43	SYSH6	O		163	HMA22	O	
44	SYSH7	O		164	HMA23	O	
45	KONO0	O	Key on data	165	HMA24	O	
46	KONO1	O		166	VSS		(Ground)
47	KONO2	O		167	MRASN	O	RAS when DRAM(s) is connected to wave memory
48	KONO3	O		168	MCASN	O	CAS when DRAM(s) is connected to wave memory
49	VSS		(Ground)	169	MOEN	O	Wave memory output enable
50	SYSL0	I/O	NSYS input/LNSYS output lower 8 bits	170	MWEN	O	Wave memory write enable
51	SYSL1	I/O		171	VSS		(Ground)
52	SYSL2	I/O		172	LMD0	I/O	Wave memory data bus (Lower 16 bits)
53	SYSL3	I/O		173	LMD1	I/O	
54	SYSL4	I/O		174	LMD2	I/O	
55	SYSL5	I/O		175	LMD3	I/O	
56	SYSL6	I/O		176	LMD4	I/O	
57	SYSL7	I/O		177	LMD5	I/O	
58	KONI0	I	Key on data input (Power supply) (Ground)	178	LMD6	I/O	
59	KONI1	I		179	LMD7	I/O	
60	VDD	I		180	VDD		(Power supply)
61	VSS			181	VSS		(Ground)
62	KONI2	I		182	LMD8	I/O	
63	KONI3	I		183	LMD9	I/O	
64	DAC0	O	DAC output	184	LMD10	I/O	
65	DAC1	O		185	LMD11	I/O	
66	WCLK	O	DAC0/DAC1 word clock	186	LMD12	I/O	
67	MELO0	O	MEL wave data output	187	LMD13	I/O	
68	MELO1	O		188	LMD14	I/O	
69	MELO2	O		189	LMD15	I/O	
70	MELO3	O		190	VSS		(Ground)
71	MELO4	O		191	LMA0	O	Wave memory address bus (Lower data memory)
72	MELO5	O		192	LMA1	O	
73	MELO6	O		193	LMA2	O	
74	MELO7	O		194	LMA3	O	
75	VDD		(Power supply)	195	LMA4	O	
76	ADLR	O	ADC word clock	196	LMA5	O	
77	MELI0	I	MEL wave data input	197	LMA6	O	
78	MELI1	I		198	LMA7	O	
79	MELI2	I		199	LMA8	O	
80	MELI3	I		200	LMA9	O	
81	MELI4	I		201	LMA10	O	
82	MELI5	I		202	LMA11	O	
83	MELI6	I		203	VSS		(Ground)
84	MELI7	I		204	LMA12	O	
85	VSS		(Ground)	205	LMA13	O	
86	RCASN	O	DRAM column address strobe (RAS signal)	206	LMA14	O	
87	RA8	O	DRAM address bus	207	LMA15	O	
88	RA7	O		208	LMA16	O	
89	RA6	O		209	LMA17	O	
90	VDD		(Power supply)	210	VDD		(Power supply)
91	VSS		(Ground)	211	VSS		(Ground)
92	RA5	O		212	LMA18	O	
93	RA4	O		213	LMA19	O	
94	RA3	O		214	LMA20	O	
95	RA2	O		215	LMA21	O	
96	RA1	O		216	LMA22	O	
97	RA0	O		217	LMA23	O	
98	RRASN	O	DRAM row address strobe (RAS signal)	218	LMA24	O	
99	RWEN	O	DARM write enable	219	VSS		(Ground)
100	VSS		(Ground)	220	SYO	O	Sync. signal for master clock
101	RD7	I/O	DRAM data bus	221	SYOD	O	Sync. signal for HCLK/QCLK
102	RD6	I/O		222	QCLK	O	1/12 master clock (64 Fs)
103	RD5	I/O		223	HCLK	O	1/6 master clock (128 Fs)
104	RD4	I/O		224	CK256	O	1/3 master clock (256 Fs)
105	RD3	I/O		225	SYSCLK	O	1/2 master clock (384 Fs)
106	RD2	I/O		226	VDD		(Power supply)
107	RD1	I/O		227	SYI	I	Sync. clock
108	RD0	I/O		228	MCLKI	I	Master clock input
109	VSS		(Ground)	229	MCLKO	O	Master clock output
110	RD17	I/O		230	VDD		(Power supply)
111	RD16	I/O		231	XIN	I	Crystal osc. input
112	RD15	I/O		232	XOUT	O	Crystal osc. output
113	RD14	I/O		233	VSS		(Ground)
114	RD13	I/O		234	ICN	I	Initial clear
115	RD12	I/O		235	CHIP2	I	2 chips mode enable
116	RD11	I/O		236	SLAVE	I	Master/Slave select when 2 chips mode
117	RD10	I/O		237	TESTON	I	Test pin
118	RD9	I/O		238	ACIN	I	
119	RD8	I/O		239	DCTEST	I	
120	VDD		(Power supply)	240	VDD		(Power supply)

● **YSS236-F** (XT013A00) **VOP3**

TG : IC002

PIN NO.	NAME	I/O	FUNCTION	PIN NO.	NAME	I/O	FUNCTION
1	VSS		Power supply	81	SO7	O	
2	WA17	O		82	SO6	O	Serial output
3	WA16	O		83	SO5	O	
4	WA15	O		84	VDD		Ground
5	WA14	O		85	VSS		Power supply
6	WA13	O	External memory address bus	86	SO4	O	
7	WA12	O		87	SO3	O	
8	WA11	O		88	SO2	O	Serial output
9	WA10	O		89	SO1	O	
10	VDD		Ground	90	SO0	O	
11	VSS		Power supply	91	WDCK	O	Data enable for DAC
12	WA09	O		92	SWPKON	O	SWP00 format key on output
13	WA08	O		93	IRQN	O	EG interrupt
14	WA07	O		94	VDD		Ground
15	WA06	O		95	VSS		Power supply
16	WA05	O	External memory address bus	96	XTAL_I	I	Quartz crystal terminal
17	WA04	O		97	XTAL_O	O	Quartz crystal terminal
18	WA03	O		98	MCLK	O	Oscillate clock output
19	WA02	O		99	VDD		Ground
20	VDD		Ground	100	VSS		Power supply
21	VSS		Power supply	101	MICN	I	Initial clear
22	WA01	O	External memory address bus	102	CLKIN	I	Master clock input
23	WA00	O		103	SYWIN	I	Sync.signal input
24	WEN	O	External memory control (WEN)	104	SYW	O	Sync.signal output
25	OEN	O	External memory control (OEN)	105	SYWD	O	Sync.signal output
26	RASN	O	External memory control (RASN)	106	VDD		Ground
27	CASN	O	External memory control (CASN)	107	VSS		Power supply
28	CEN	O	External memory control (CEN)	108	CLKO	O	For test (512 fs output)
29	VDD		Ground	109	WCLK	O	2 times sync.clock output (256 fs)
30	VSS		Power supply	110	HCLK	O	4 times sync.clock output (128 fs)
31	WD19	I/O		111	QCLK	O	8 times sync.clock output (64 fs)
32	WD18	I/O		112	TSTCI	I	PLL test input
33	WD17	I/O	External memory data bus	113	VDD		Ground
34	WD16	I/O		114	VSS		Power supply
35	WD15	I/O		115	(NC)		
36	WD14	I/O		116	VDD(PLL)		
37	VDD		Ground	117	CPO	O	PLL control output
38	VSS		Power supply	118	CPIN	I	PLL control input
39	WD13	I/O		119	REF	I	PLL control input
40	WD12	I/O		120	VSS(PLL)		
41	WD11	I/O		121	(NC)		
42	WD10	I/O	External memory data bus	122	VDD		Ground
43	WD09	I/O		123	VSS		Power supply
44	WD08	I/O		124	TSTCS	I	PLL test input
45	WD07	I/O		125	CA6	I	
46	VDD		Ground	126	CA5	I	CPU address bus
47	VSS		Power supply	127	CA4	I	
48	WD06	I/O		128	CA3	I	
49	WD05	I/O		129	CA2	I	
50	WD04	I/O		130	VDD		Ground
51	WD03	I/O	External memory data bus	131	VSS		Power supply
52	WD02	I/O		132	CA1	I	CPU address bus
53	WD01	I/O		133	CA0	I	Lo/Hi select in 8 bits write
54	WD00	I/O		134	CSN	I	Chip select
55	VDD		Ground	135	RDN	I	Register read
56	VSS		Power supply	136	WRN	I	Register write
57	TST2	O		137	BTYP		Data bus type select
58	TST1	O	Test output	138	VDD		Ground
59	TST0	O		139	VSS		Power supply
60	MS	I	Memory select	140	CD15	I/O	
61	LRCLK	O	LR clock for ADC	141	CD14	I/O	
62	SI7	I	Serial input	142	CD13	I/O	CPU data bus
63	SI6	I		143	CD12	I/O	
64	VDD		Ground	144	CD11	I/O	
65	VSS		Power supply	145	VDD		Ground
66	SI5	I		146	VSS		Power supply
67	SI4	I		147	CD10	I/O	
68	SI3	I	Serial input	148	CD09	I/O	
69	SI2	I		149	CD08	I/O	CPU data bus
70	SI1	I		150	CD07	I/O	
71	SI0	I		151	CD06	I/O	
72	DB1	I	Output bit type select for DAC	152	CD05	I/O	
73	DB0	I		153	VDD		Ground
74	VDD		Ground	154	VSS		Power supply
75	VSS		Power supply	155	CD04	I/O	
76	ODFM	I	Output mode select for DAC	156	CD03	I/O	
77	OFS3	I		157	CD02	I/O	CPU data bus
78	OFS2	I	Serial output format select	158	CD01	I/O	
79	OFS1	I		159	CD00	I/O	
80	OFS0	I		160	VDD		Ground

● **SPC7214F0B** (XY625A00) **SCSI Control**

DM: IC031

PIN NO.	NAME	I/O	FUNCTION	PIN NO.	NAME	I/O	FUNCTION
1	LV_{DD}		Power supply +3.3V	51	LV_{DD}		Power supply +3.3V
2	EXCLK	I	External clock input	52	PD11	I/O	Port DMA data bus
3	Vss		Ground	53	PD4	I/O	
4	OSCIN	I	Oscillator input	54	PD10	I/O	
5	OSCOUT	O	Oscillator output	55	PD5	I/O	
6	LV_{DD}		Power supply +3.3V	56	PD9	I/O	
7	CLKSEL0	I	Input clock select	57	PD6	I/O	
8	CLKSEL1	I	System clock select	58	PD8	I/O	
9	VC	O	Internal VCO control	59	PD7	I/O	
10	XPLLPD	I	PLL power down input	60	Vss		Ground
11	PLLCT0	I	PLL control	61	XSIO	I/O	SCSI I/O signal (Low active)
12	PLLCT1	I		62	HV_{DD}		Power supply +5V
13	TESTMON	O	Test monitor output	63	XSREQ	I/O	SCSI REQ signal (Low active)
14	TESTEN	I	Test input	64	Vss		Ground
15	DB0	I/O	Data bus	65	XSCD	I/O	SCSI C/D signal (Low active)
16	DB1	I/O		66	XSSEL	I/O	SCSI SEL signal (Low active)
17	DB2	I/O		67	Vss		Ground
18	DB3	I/O		68	XSMSG	I/O	SCSI MSG signal (Low active)
19	HV_{DD}		Power supply +5V	69	XSRST	I/O	SCSI RST signal (Low active)
20	DB4	I/O	Data bus	70	Vss		Ground
21	DB5	I/O		71	XSACK	I/O	SCSI ACK signal (Low active)
22	DB6	I/O		72	HV_{DD}		Power supply +5V
23	DB7	I/O		73	XSBSY	I/O	SCSI BSY signal (Low active)
24	AD0	I	Address bus	74	NC		Not used
25	Vss		Ground	75	Vss		Ground
26	LV_{DD}		Power supply +3.3V	76	HVDD		Power supply +5V
27	AD1	I	Address bus	77	XSATN	I/O	SCSI ATN signal (Low active)
28	AD2	I		78	Vss		Ground
29	AD3	I		79	XSDBP	I/O	SCSI data parity (Low active)
30	AD4	I		80	HV_{DD}		Power supply +5V
31	XWR	I	Data write (Low active)	81	XSDB7	I/O	SCSI data bus (Low active)
32	XRD	I	Data read (Low active)	82	Vss		Ground
33	XRESET	I	System reset (Low active)	83	NC		Not used
34	XINT	O	Interrupt request (Low active)	84	XSDB6	I/O	SCSI data bus (Low active)
35	XCS	I	Chip select (Low active)	85	HV_{DD}		Power supply +5V
36	Vss		Ground	86	XSDB5	I/O	SCSI data bus (Low active)
37	XPDACK	I/O	Port DMA acknowledge	87	Vss		Ground
38	XPRD	I/O	Port read (Low active)	88	XSDB4	I/O	SCSI data bus (Low active)
39	XPWR	I/O	Port wright (Low active)	89	HV_{DD}		Power supply +5V
40	PDREQ	I/O	Port DMA request (Low active)	90	XSDB3	I/O	SCSI data bus (Low active)
41	PD15	I/O	Port DMA data bus	91	Vss		Ground
42	PD0	I/O		92	XSDB2	I/O	SCSI data bus (Low active)
43	PD14	I/O		93	NC		Not used
44	PD1	I/O		94	HV_{DD}		Power supply +5V
45	HV_{DD}		Power supply +5v	95	XSDB1	I/O	SCSI data bus (Low active)
46	PD13	I/O	Port DMA data bus	96	Vss		Ground
47	PD2	I/O		97	XSDB0	I/O	SCSI data bus (Low active)
48	PD12	I/O		98	HV_{DD}		Power supply +5V
49	PD3	I/O		99	NC		Not used
50	Vss		Ground	100	Vss		Ground

● **AK5351-VF-E2** (XV510A00) **ADC** (Analog to Digital Converter)

DA: IC045

PIN NO.	NAME	I/O	FUNCTION	PIN NO.	NAME	I/O	FUNCTION
1	AINR+	I	Analog signal input (R channel +)	13	DGND	-	Digital ground
2	AINR-	I	Analog signal input (R channel -)	14	TST4	I/O	Test mode setting 4
3	VREF	O	Reference voltage	15	AMODE2		Interface clock select 2
4	VA	-	Analog power supply	16	/PD	I	Power-down mode
5	AGND	-	Analog ground	17	MCLK	I	Master clock input
6	AINL+	I	Analog signal input (L channel +)	18	SCLK	I/O	Serial data clock
7	AINL-	I	Analog signal input (L channel -)	19	LRCK	I	Input/Output channel clock
8	TST1	I/O	Test mode setting 1	20	FSYNC	I/O	Frame synch. clock
9	HPFE		HPF on/off	21	SDATA	O	Serial data output
10	TST2	I/O	Test mode setting 2	22	CMODE	I	Master clock select
11	TST3	I/O	Test mode setting 3	23	SMODE1	I	Interface clock select 1
12	VD	-	Digital power supply	24	VB	-	Digital power supply

• **D65621GF-028-3B9** (XS370A00) **SMI**

TG: IC019

PIN No.	NAME	I/O	FUNCTION	PIN No.	NAME	I/O	FUNCTION
1	LMA24	I	Low Memory Address	41	VDD	-	
2	LMA23	I	Low Memory Address	42	L1RAS2	O	RAS2 for LoMem SIMM 1
3	LMA22	I	Low Memory Address	43	L1RAS3	O	RAS3 for LoMem SIMM 1
4	LMA21	I	Low Memory Address	44	GND	-	
5	LMA20	I	Low Memory Address	45	HDRAS0	O	RAS for HiMem DRAM 0
6	LMA19	I	Low Memory Address	46	HDRAS1	O	RAS for HiMem DRAM 1
7	LMA18	I	Low Memory Address	47	GND	-	
8	HMA24	I	High Memory Address	48	VDD	-	
9	HMA23	I	High Memory Address	49	LDRAS0	O	RAS for LoMem DRAM 0
10	HMA22	I	High Memory Address	50	LDRAS1	O	RAS for LoMem DRAM 1
11	HMA21	I	High Memory Address	51	LMA1	I	Low Memory Address
12	GND	-	No.12	52	LMA0	I	Low Memory Address
13	HMA20	I	High Memory Address	53	GND	-	No.53
14	HMA19	I	High Memory Address	54	LMA1X	O	Low Memory Address Exchanged
15	HMA18	I	High Memory Address	55	LMA0X	O	Low Memory Address Exchanged
16	RASN	I	Row Address Strobe	56	GND	-	
17	H0RAS0	O	RAS0 for HiMem SIMM 0	57	VDD	-	
18	H0RAS1	O	RAS1 for HiMem SIMM 0	58	HMA1	I	High Memory Address
19	GND	-		59	HMA0	I	High Memory Address
20	H0RAS2	O	RAS2 for HiMem SIMM 0	60	HMA1X	O	High Memory Address Exchanged
21	H0RAS3	O	RAS3 for HiMem SIMM 0	61	HMA0X	O	High Memory Address Exchanged
22	GND	-		62	D0	I	Data Input
23	VDD	-		63	D1	I	Data Input
24	L0RAS0	O	RAS0 for LoMem SIMM 0	64	GND	-	
25	L0RAS1	O	RAS1 for LoMem SIMM 0	65	D2	I	Data Input
26	GND	-		66	D3	I	Data Input
27	L0RAS2	O	RAS2 for LoMem SIMM 0	67	D4	I	Data Input
28	L0RAS3	O	RAS3 for LoMem SIMM 0	68	D5	I	Data Input
29	GND	-		69	A2	I	Address
30	VDD	-		70	WRN	I	Write
31	H1RAS0	O	RAS0 for HiMem SIMM 1	71	GND	-	No.71
32	H1RAS1	O	RAS1 for HiMem SIMM 1	72	VDD	-	No.72
33	GND	-		73	CSN	I	Chip Select
34	VDD	-		74	A0	I	Address
35	H1RAS2	O	RAS2 for HiMem SIMM 1	75	A1	I	Address
36	H1RAS3	O	RAS3 for HiMem SIMM 1	76	MCLK	I	Clock (37MHz)
37	GND	-		77	SYI	I	Sync Clock (48kHz)
38	L1RAS0	O	RAS0 for LoMem SIMM 1	78	HBANK	O	HiMem Bank Select 01/23
39	L1RAS1	O	RAS1 for LoMem SIMM 1	79	LBANK	O	LoMem Bank Select 01/23
40	GND	-		80	REFRN	O	Refresh Timing

• **MBCG46183-129** (XV833A00) **Gate Array**

DM: IC019, 020

PIN NO.	NAME	I/O	FUNCTION	PIN NO.	NAME	I/O	FUNCTION
1	D5	I/O	Data Bus	25	TX31	O	Transmit Data 31
2	D6	I/O		26	RX32	I	Receive Data 32
3	D7	I/O		27	TX32	O	Transmit Data 32
4	/IRQ0	I/O	Interrupt Request Port 0	28	RX33	I	Receive Data 33
5	/IRQ1	I/O	Interrupt Request Port 1	29	TX33	I/O	Transmit Data 33
6	Vss		Ground	30	/IC	I	Initial Clear
7	/IRQ2	I/O	Interrupt Request Port 2	31	Vss		Ground
8	IRQ3	I/O	Interrupt Request Port 3	32	XI	I	Quartz Crystal Input
9	/RD	I	Read Signal Input	33	Vss		Ground
10	/WR	I	Write Signal Input	34	XO	I/O	Quartz Crystal Onput
11	/CE	I	Chip Enable Input	35	A0	I	Address Bus
12	/ASTB	I	Address Strobe (Not used: to ground)	36	A1	I	
13	TESTSIO	I	Input with Pull-down Resistor (50k)	37	A2	I	
14	RX0	I	Receive Data 0	38	A3	I	
15	TX0	O	Transmit Data 0	39	A4	I	
16	RX1	I	Receive Data 1	40	A5	I	
17	TX1	O	Transmit Data 1	41	CPUCLK	I	CPU Clock
18	Vss		Ground	42	Vss		Ground
19	Vdd		Power Supply	43	Vdd		Power Supply
20	RX2	I	Receive Data 2	44	D0	I/O	Data Bus
21	TX2/BO2	O	Transmit Data 2	45	D1	I/O	
22	RX30	I	Receive Data 30	46	D2	I/O	
23	TX30	O	Transmit Data 30	47	D3	I/O	
24	TX31	I	Receive Data 31	48	D4	I/O	

● **HD63266F** (XI939A00) **FDC** (Floppy Disk Controller)

DM: IC039

PIN NO.	NAME	I/O	FUNCTION	PIN NO.	NAME	I/O	FUNCTION
1	8"//5"	I	Data transmission speed	33	/TRKO	I	Track 00 signal
2	XTALSET	I	Clock select	34	/INDEX	I	Index signal
3	/RESET	I	Rest	35	/RDATA	I	Read data input from FDD
4	E//RD	I	Enable/Read	36	XTAL2		Clock
5	RW//WR	I	Read/write/Write	37	EXTAL2		
6	/CS	I	Chip select	38	NC		
7	/DACK	I	DMA acknowledge	39	XTAL1		Clock
8	RS0	I	Register select	40	EXTAL1		
9	RS1	I		41	VSS4		Ground
10	VSS1		Ground	42	VSS5		
11	VSS2			43	NC		
12	D0	I/O	Data bus	44	VCC2		Power supply
13	D1	I/O		45	VCC3		
14	D2	I/O		46	VCC4		
15	D3	I/O		47	/WGATE	O	Write control
16	D4	I/O		48	/WDATA	O	Write data to FDD
17	D5	I/O		49	VSS6		Ground
18	D6	I/O		50	/STEP	O	Step signal to control head of FDD
19	D7	I/O		51	/HDIR	O	Direction
20	/DREQ	O	DMA request	52	/HLOAD	O	Head load
21	/IRQ	O	Interrupt request	53	/HSEL	O	Head select
22	/DEND	I	Data end	54	VSS7		Ground
23	VSS3		Ground	55	/DS0	O	Drive select
24	1/2 EX1			56	/DS1	O	
25	VCC1		Power supply	57	/DS2	O	
26	NUM1	I		58	/DS3	O	
27	NUM3	I		59	VSS8		Ground
28	IFS	I	Host interface select	60	/MON0	O	Motor on
29	SFORM	I	Format data	61	/MON1	O	
30	/INP	I	Index pulse	62	/MON2	O	
31	/READY	I	Ready from FDD	63	/MON3	O	
32	/WPRT	I	Write control signal	64	VSS9		Ground

● **JG760082A** (XV481B00) **Gate Array** (Video Out)

DM: IC046

PIN NO.	NAME	I/O	FUNCTION	PIN NO.	NAME	I/O	FUNCTION
1	RESET	I	Reset (High/Low)	33	RD	O	Read strobe (High/Low)
2	TEST	I	Test mode setting (High/Low)	34	WR	O	Write strobe (High/Low)
3	MODE	I	Mode select (High/Low)	35	GND	-	Ground (Out buffer)
4	NTSC/PAL	I	NTSC/PAL signal input (High/Low)	36	A0	O	Address bus
5	YD	I	Frame	37	A1	O	
6	LP	I	Line latch pulse	38	A2	O	
7	5V	-	Power supply (5 v)	39	A3	O	
8	XSCL	I	4 Dot latch clock	40	A4	O	
9	GND	-	Ground (In buffer)	41	A5	O	
10	XD0	I	Dot data	42	A6	O	
11	XD1	I		43	A7	O	
12	XD2	I		44	A8	O	
13	XD3	I		45	A9	O	
14	GND	-	Ground	46	A10	O	
15	5V	-	Power supply (In buffer 5 V)	47	A11	O	
16	5V	-	Power supply (Out buffer 5 V)	48	A12	O	
17	LCD_CLK	O	LCD clock output (9 MHz)	49	5V	-	Ground (Out buffer 5 V)
18	GND	-	Ground (Out buffer)	50	A13	O	Address bus
19	XA0	I	OSC_NTSC signal input	51	A14	O	
20	XA1	O	OSC_NTSC signal output	52	A15	O	
21	XB0	I	OSC_PAL signal input	53	A16	O	
22	XB1	O	OSC_PAL signal output	54	SYNCOUT	O	Sync. signal output
23	GND	-	Ground (In buffer)	55	GND	-	Ground (Out buffer)
24	D0	I/O	Data bus	56	SC_NTSC	O	SC_NTSC signal output
25	D1	I/O		57	SC_PAL	O	SC_PAL signal output
26	D2	I/O		58	GND	-	Ground (Out buffer)
27	D3	I/O		59	BOUT1	O	Color data
28	D4	I/O		60	BOUT0	O	
29	D5	I/O		61	GOUT1	O	
30	D6	I/O		62	GOUT0	O	
31	D7	I/O		63	ROUT1	O	
32	GND	-	Ground	64	ROUT0	O	

● **SED1335F0B** (XQ595A00) **LCDC** (LCD Controller)

DM: IC044

PIN NO.	NAME	I/O	FUNCTION	PIN NO.	NAME	I/O	FUNCTION
1	VA5	O	VRAM address bus	31	XD2	O	Data bus output for 4 bit dot
2	VA4	O		32	XD1	O	
3	VA3	O		33	XD0	O	
4	VA2	O		34	XECL	O	S driver enable, chain clock
5	VA1	O		35	XSCL	O	Data bus shift clock
6	VA0	O		36	Vss	-	Ground
7	/VWR	O	VRAM read/write	37	LP	O	X driver latch pulse
8	/VCE	O	Memory control	38	WF	O	Frame signal for X/Y driver
9	/VRD	-	Not used	39	YDIS	O	Power down signal for displaying off mode
10	/RES	I	Initial clear	40	YD	O	Scan start signal
11	NC	-	Not used	41	YSCL	O	Scan shift clock
12	NC	-	Not used	42	VD7	I/O	VRAM data bus
13	/RD	I	Read strobe	43	VD6	I/O	
14	/WR	I	Write strobe	44	VD5	I/O	
15	SEL2	I	Bus select	45	VD4	I/O	
16	SEL1	I	Bus select	46	VD3	I/O	
17	OSC1	I	Clock	47	VD2	I/O	
18	OSC2	O	Clock	48	VD1	I/O	
19	/CS	I	Chip select	49	VD0	I/O	
20	A0	I	Data mode select	50	VA15	O	VRAM address bus
21	Vdd	-	Power supply	51	VA14	O	
22	D0	I/O	Data bus	52	VA13	O	
23	D1	I/O		53	VA12	O	
24	D2	I/O		54	VA11	O	
25	D3	I/O		55	VA10	O	
26	D4	I/O		56	VA9	O	
27	D5	I/O		57	VA8	O	
28	D6	I/O		58	VA7	O	
29	D7	I/O		59	VA6	O	
30	XD3	O	Data bus output for 4 bit dot	60	NC	-	Not used

● **PCM1716E** (XU829A00) **DAC** (Digital to Analog Converter)

DA : IC055, 056

PIN NO.	NAME	I/O	FUNCTION	PIN NO.	NAME	I/O	FUNCTION
1	LRCK	I		15	Vcc1	-	Analog power supply (+5 V)
2	DATA	I	Data input	16	VOUTL	O	Lch, analog voltage output
3	BCK	I	Bit clock	17	NC	-	
4	CLKO	O	Clock input	18	EXTL	O	Lch, analog output
5	XTI	I	Clock input	19	AGND2L	-	Analog ground
6	XTO	O	Clock out	20	Vcc2L	-	Analog power supply (+5 V)
7	DGND	-	Digital ground	21	/ZERO	O	Zero data flag
8	VDD	-	Digital power supply (+5 V)	22	/RST	I	Reset
9	Vcc2R	-	Analog power supply (+5 V)	23	/CS/IWO	I	Chip select
10	AGND2R	-	Analog ground	24	MODE	I	Mode control select (H: Software, L: Hardware)
11	EXTR	O	Rch, analog output	25	/MUTE	I	Mute control
12	NC	-		26	MD/DM0	I	Mode control data/De-emphasis select1
13	VOUTR	O	Rch, analog voltage output	27	MC/DM1	I	Mode control BCK/De-emphasis select2
14	AGND1	-	Analog ground	28	ML/IIS	I	Mode control Latch/input format select

● **MSM82C51A-2GS-K** (XV513A00)
USART (Universal Synchronous Asynchronous Receiver Transmitter)

DM : IC050

PIN NO.	NAME	I/O	FUNCTION	PIN NO.	NAME	I/O	FUNCTION
1	D2	I/O	Data Bus	17	TXRDY	O	character data
2	D3	I/O	Data Bus	18	SYNDET/BD	I/O	character data
3	RXD	I	Serial Data	19	/CTS	I	input terminal for modem interface
4	NC			20	NC		
5	GND		Ground	21	TXEMPTY	O	character data
6	D4	I/O	Data Bus	22	TXD	O	character data
7	D5	I/O	Data Bus	23	CLK	I	Clock
8	D6	I/O	Data Bus	24	RESET	I	Reset
9	D7	I/O	Data Bus	25	/DSR	I	input port for modem interface
10	/TXC	I	Clock	26	/RTS	O	output port for modem interface
11	/WR	I	Write signal	27	/DTR	O	output port for modem interface
12	/CS	I	Device select	28	/RXC	I	Clock
13	NC			29	NC		
14	C//D	I	Access select signal	30	VCC	I	Power supply
15	/RD	I	Read signal	31	D0	I/O	Data Bus
16	RXRDY	O	character data	32	D1	I/O	Data Bus

● **SLA904FF1T** (XW154A00) **PIF32** (Pararel Interface)

TG: IC017

PIN No.	NAME	I/O	FUNCTION	PIN No.	NAME	I/O	FUNCTION
1	/RDS1	I	Read (Slave CPU)	51	Vcc	-	Power Supply +5V
2	/WRS1	I	Write (Slave CPU)	52	MD30/SA20	I/O	Main CPU data / Slave CPU address
3	SA0	I	Slave CPU address	53	MD29/WRS2	I/O	Main CPU data / Write (Slave CPU)
4	/IRQS	O	Interrupt request (Slave CPU)	54	MD28/RDS2	I/O	Main CPU data / Read (Slave CPU)
5	Vcc	-	Power Supply +5V	55	MD27/CSS2	I/O	Main CPU data / Chip select (Slave CPU)
6	SD0	I/O	Slave CPU data	56	MD26	I/O	Main CPU data
7	SD1	I/O		57	Vcc	-	Power Supply +5V
8	SD2	I/O		58	MD25	I/O	Main CPU data
9	SD3	I/O		59	MD24	I/O	
10	SD4	I/O		60	MD23	I/O	
11	SD5	I/O		61	MD22	I/O	
12	SD6	I/O		62	GND	-	Ground
13	GND	-	Ground	63	MD21	I/O	Main CPU data
14	SD7	I/O	Slave CPU data	64	MD20	I/O	
15	SD8	I/O		65	MD19	I/O	
16	SD9	I/O		66	MD18	I/O	
17	SD10	I/O		67	MD17	I/O	
18	SD11	I/O		68	MD16	I/O	
19	SD12	I/O		69	GND	-	Ground
20	SD13	I/O		70	MD15	I/O	Main CPU data
21	GND	-	Ground	71	MD14	I/O	
22	SD14	I/O	Slave CPU data	72	MD13	I/O	
23	SD15	I/O		73	MD12	I/O	
24	SD16	I/O		74	MD11	I/O	
25	SD17	I/O		75	GND	-	Ground
26	Vcc	-	Power Supply +5V	76	MD10	I/O	Main CPU data
27	SD18	I/O	Slave CPU data	77	MD9	I/O	
28	SD19	I/O		78	MD8	I/O	
29	SD20	I/O		79	MD7	I/O	
30	SD21	I/O		80	MD6	I/O	
31	GND	-	Ground	81	MD5	I/O	
32	SD22	I/O	Slave CPU data	82	MD4	I/O	
33	SD23	I/O		83	TDO	-	Not used
34	SD24	I/O		84	GND	-	Ground
35	SD25	I/O		85	MD3	I/O	Main CPU data
36	SD26	I/O		86	MD2	I/O	
37	SD27	I/O		87	MD1	I/O	
38	Vcc	-	Power Supply +5V	88	Vcc	-	Power Supply +5V
39	SD28	I/O	Slave CPU data	89	MD0	I/O	Main CPU data
40	SD29	I/O		90	/IRQM	O	Interrupt request (Main CPU)
41	SD30	I/O		91	GND	-	Ground
42	SD31	I/O		92	MA1	I	Main CPU address
43	32/16	I	Open	93	MA0	I	
44	GND	-	Ground	94	/WRM	I	Write (Main CPU)
45	TDI	-	Not used	95	/RDM	I	Read (Main CPU)
46	/RESET	I	Reset	96	GND	-	Ground
47	TMS	-	Not used	97	/CSM	I	Chip select (Main CPU)
48	TCK	-		98	Vcc	-	Power Supply +5V
49	/IRQS2	O	Interrupt request (Slave CPU)	99	/CSS1	I	Chip select (Slave CPU)
50	MD31	I/O	Main CPU data	100	GND	-	Ground

● **PCM1702U/2K** (XP551A00) **DAC** (Digital to Analog Converter)

DA: IC051, 052

PIN NO.	NAME	I/O	FUNCTION	PIN NO.	NAME	I/O	FUNCTION
1	DATA	I	Data input	11	+VCC		Power supply (+5 V)
2	CLK	I	Clock	12	BPO		Bipolar de-couple
3	NC			13	NC		
4	+VDD		Power supply (+5 V)	14	IOUT	O	Output current
5	D.GND		Digital ground	15	A.GND		Analog ground
6	-VDD		Power supply (-5 V)	16	A.GND		Analog ground
7	L.E	I	Latch enable	17	SERV		Servo de-couple
8	NC			18	NC		
9	NC			19	REF		Reference de-couple
10	NC			20	-VCC		Power supply (-5 V)

● MN101C027YB (XS711200) CPU

PN1 : IC001

PIN NO.	NAME	I/O	FUNCTION	PIN NO.	NAME	I/O	FUNCTION
1	S1	I	Switch matrix data	33	S12	I	Switch matrix data
2	S2	I		34	S13	I	
3	S3	I		35	S14	I	
4	S4	I		36	TXD	O	MIDI transmit data
5	S5	I		37	S15	I	Switch matrix data
6	VREF+	-	Power supply (+5 V, analog)	38	S16	I	
7	VDD	-	Power supply (+5 V)	39	S17	I	
8	OSC2	O	Crystal oscillator (8 MHz)	40	S18	I	
9	OSC1	I	Crystal oscillator (8 MHz)	41	L16	O	LED drive data
10	VSS	-	Ground	42	L17	O	
11	XI	I	Not used	43	L18	O	
12	XO	O	Not used	44	L19	O	
13	MMOD	I	Memory mode select (Grounded)	45	L8	O	
14	RD0	O	Rotary encoder data	46	L9	O	
15	RXD	I	MIDI receive data	47	L10	O	
16	D0	O	LED and switch drive data	48	L11	O	
17	D1	O		49	L12	O	
18	D2	O		50	L13	O	
19	D3	O		51	L14	O	
20	D4	O		52	L15	O	
21	/RST	I	Reset	53	L7	O	LED and switch drive data
22	D5	O	LED and switch drive data	54	L6	O	
23	D6	O		55	L5	O	
24	D7	O		56	L4	O	
25	D8	O		57	L3	O	
26	D9	O		58	L2	O	
27	S6	I	Switch matrix data	59	L1	O	
28	S7	I		60	L0	O	
29	S8	I		61	VREF	-	Grounded
30	S9	I		62	AD0	I	Analog input
31	S10	I		63	AD1	I	Analog input
32	S11	I		64	S0	I	Switch matrix data

■ IC BLOCK DIAGRAM

● **MM74HCU04SJX (XY070A00)**
SN74HCU04NSR (XW842A00)
SN74HCU04N (IG142250)
TC74HCU04AFEL (XD598A00)
TC74VHC04F (XM332A00)
74VHC04SJX (XY871A00)
Hex Inverter
DM: IC003, 043, 051, 054, 059
DJACK: IC004 TG: IC003

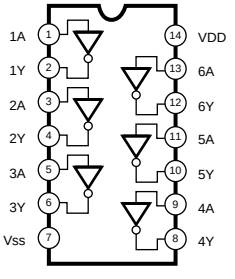

● **TC74VHC08F (XT014A00)**
74VHC08SJX (XY872A00)
Quad 2 Input AND
DM: IC004

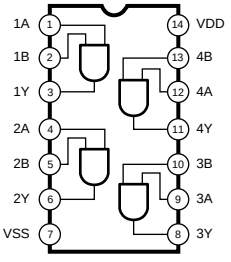

● **TC74VHC11F (EL) (XT812A00)**
Triple 3 Input AND
DM: IC016

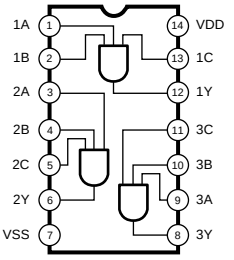

- **HD74HC14FPEL (XL094A00)**
  MM74HC14SJX (XW104A00)
  Hex Inverter
  TG: IC047

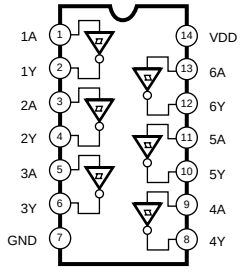

- **TC74VHC32F (EL) (XY537A00)**
  74VHC32SJX (XY306A00)
  Quad 2 Input OR
  DM: IC018, 022, 053, 058
  TG: IC024

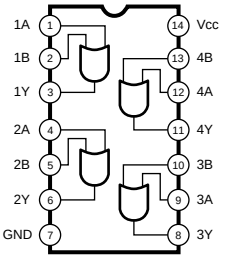

- **TC74VHC74F-EL (XW875A00)**
  74VHC74SJX (XY875A00)
  Dual D-Type Flip-Flop
  DM: IC021, 060

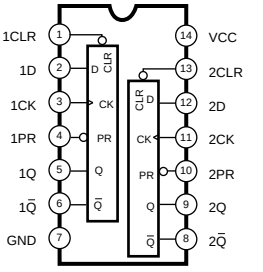

INPUTS				OUTPUTS	
PR	CLR	CLK	D	Q	Q
L	H	X	X	H	L
H	L	X	X	L	H
L	L	X	X	H	H
H	H	f	H	H	L
H	H	f	L	L	H
H	H	L	X	Q₀	Q₀

- **TC74VHC125F (XW313A00)**
  74VHC125SJX (XY959A00)
  Quad 3-State Bus Buffer
  DM: IC052

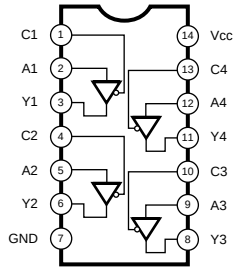

- **HD74LVC138FP (XS963A00)**
  TC74VHC138F (XT015A00)
  74VHC138SJX (XY873A00)
  3 to 8 Demultiplexer
  DM: IC023, 024
  TG: IC011, 040, 041

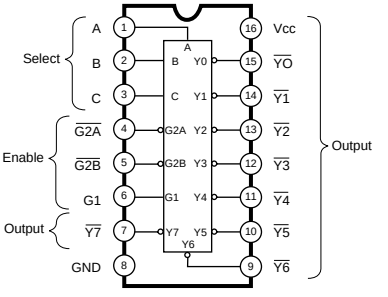

- **HD74LVC139FPEL (XS048A00)**
  TC74VHC139F (EL) (XW324A00)
  74VHC139SJX (XY960A00)
  Dual 2 to 4 Demultiplexer
  DM: IC025

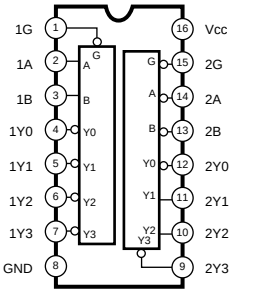

- **TC74VHC157F (EL) (XT475A00)**
  74VHC157SJX (XY870A00)
  Quad 2 to 1 Multiplexer
  DM: IC034, 035

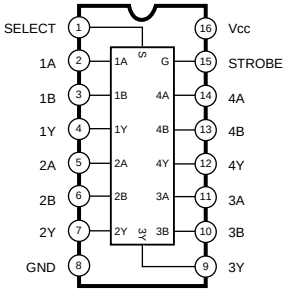

- **TC74VHC174F (EL) (XW314A00)**
  Hex D-Type Flip-Flop
  DM: IC049

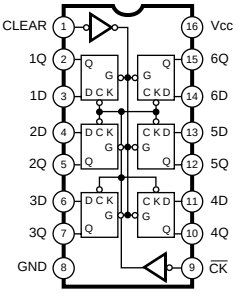

- **TC74VHC245F (XT487A00)**
  TC74HC245AF (XS720A00)
  MM74HC245ASJX (XW107A00)
  74VHC245SJX (XY874A00)
  Octal 3-State Bus Transceiver
  DM: IC009-015, 017, 036, 038, 040-042
  TG: IC020-023, IC025-033, 048, 049

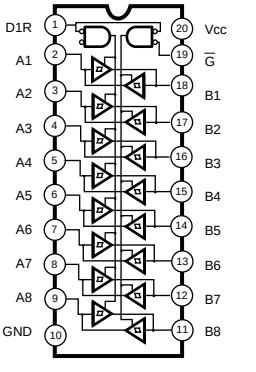

- **HD74LVC541AFPEL (XS049A00)**
  74VHC541SJX (XY961A00)
  Octal 3-State Buffer
  TG: IC018

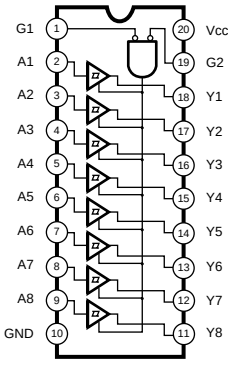

- **SN75C1168N (XU463A00)**
  Line Driver / Receiver
  DJACK: IC003

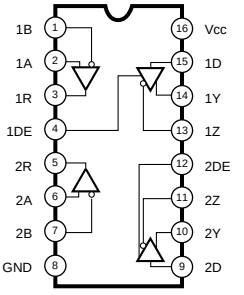

- **LB1443N** (XF483A00)
  LED Driver
  DA: IC046

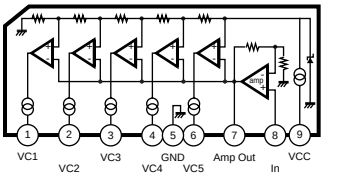

- **CXA1645M-T6** (XN431A00)
  RGB Encorder
  DM: IC048

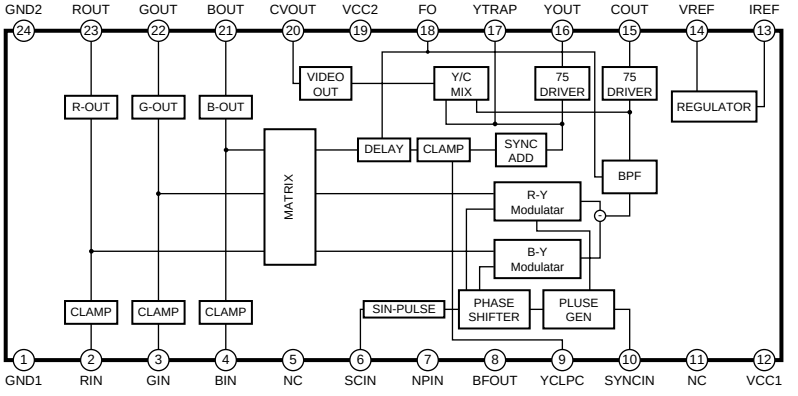

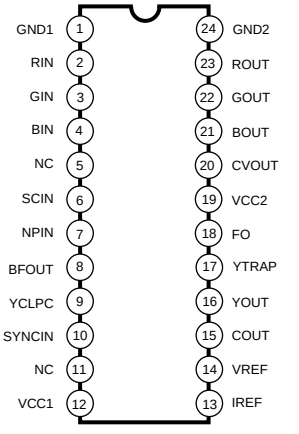

- **LA6517** (XM804A00)
  Dual Low Voltage Power Amplifier
  AM: IC003

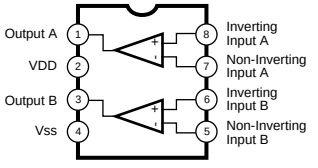

- **RC4558D-V** (IG001390)
  µPC4570C (XC520A00)
  µPC4570G2 (XF291A00)
  Dual Operational Amplifier
  DA: IC044, 053, 054, 057-060 DM: IC055
  MIC/HP: IC101, 102 PC: IC1

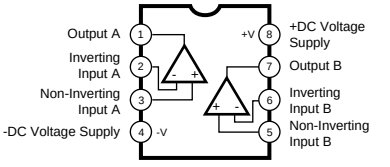

- **µPC4570HA** (XB247A00)
  Dual Operational Amplifier
  AM: IC001, 002, 004, 005

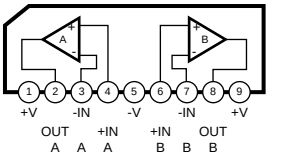

INSPECTIONS & TEST PROGRAM

1. Test Condition

1-1. Measuring Devices

- Level: Level meter (JIS-C meter, unless otherwise specified)
- Frequency: Frequency counter capable of measuring to at least three decimal places.

Note: Input impedance for the above-mentioned devices must be at least 1MΩ.

1-2. Control Side States

- MASTER VOLUME : MAX
- TRIM volume : MAX
- MIC INPUT VOLUME : MAX

1-3. Connector States

- Except where otherwise specified, the following jacks shall be left unconnected: LOOP SEND (L/L+R), LINE OUT SUB (1, 2, 3 and 4).
- To measure the Phones jack, insert a plug with a 33Ω load (both L and R channels). To measure LINE OUT MAIN (L/L+R, R), LINE OUT SUB (1, 2, 3 and 4) and LOOP SEND (L/L+R, R) jacks, insert a plug with a 10KΩ load. Measure at both ends of the plugged-in load.
- Connect a 30Ω/5W resistance between the 3rd and 4th terminals of the lamp connectors (both L and R).

2. INSPECTION

2-1. AUX IN Input Level

Apply a 1 kHz/-15 dBm sine wave to the AUX IN (L/L+R) and AUX IN (R) each. Confirm that the output meets the following specifications:

PHONES (L, R): +0.4 dBm +/-3 dB

When TRIM volume is at minimum, confirm that the output meets the following specifications:

PHONES (L, R): less than -75.0 dB

2-2. PLUG IN Board Output Level

Ver. 099

Optoin Board	PHONES (L/R)	LINE OUT (L/R)	LOOP SEND (L/R)
150DX	+10.0 +/- 3dB	+21.0 +/- 3dB	+14.0 +/- 3dB
150VL	+11.5 +/- 3dB	+22.5 +/- 3dB	+15.5 +/- 3dB
150AN	+11.5 +/- 3dB	+22.5 +/- 3dB	+15.5 +/- 3dB
150PF	+5.0 +/- 3dB	+16.0 +/- 3dB	+9.0 +/- 3dB
100XG	+11.0 +/- 3dB	+22.0 +/- 3dB	+15.5 +/- 3dB

above Ver. 1.0

Optoin Board	PHONES (L/R)	LINE OUT (L/R)	LOOP SEND (L/R)
150DX	+6.5dBm +/- 3dB	+15.5dBm +/- 3dB	+6.5dBm +/- 3dB
150VL	+7.0dBm +/- 3dB	+16.0dBm +/- 3dB	+7.0dBm +/- 3dB
150AN	+7.0dBm +/- 3dB	+16.0dBm +/- 3dB	+7.0dBm +/- 3dB
150PF	-1.0dBm +/- 3dB	+8.0dBm +/- 3dB	-0.5dBm +/- 3dB
100XG	+5.0dBm +/- 3dB	+14.0dBm +/- 3dB	+5.5dBm +/- 3dB

2-3. MASTER VOLUME

Confirm that the sound level changes as follows when the MSTER VOLUME is changed from MAX to MIN.

- Change = At least 65dB
- On auditory check, confirm that MIN cuts off the sound.

2-4. MIC/LINE Input Level & Level Indicate LED

When the following input level are used with test program number 055, confirm that output levels are as follows:

MIC/LINE	Input level	Output level	SIGNAL LED	OVER LED
LINE	-56.0 dBm	-15.3 dBm +/-3 dB	OFF	OFF
MIC 2	-56.0 dBm	-5.5 dBm +/-3 dB	ON	OFF
MIC 1	-50.0 dBm	+10.3 dBm +/-3 dB	ON	ON

2-5. Noise Level

When no sound is produced, confirm that each residual output noise is as follows:

PHONES (L, R)	: less than -75.0 dBm
LINE OUT MAIN (L/L+R, R)	: less than -80.0 dBm
LOOP SEND (L/L+R, R)	: less than -80.0 dBm
LINE OUT SUB (1, 2, 3, 4)	: less than -80.0 dBm

2-6. DIMMER

Operate the [DIMMER] knob, and confirm that the correct voltage is output at all knob positions. Confirm that L and R are each producing output. (Be sure to connect the correct load.)

<Knob>	<Voltage>
OFF	: 0 (V)
MIN	: 3.45 +/- 0.15 (V)
MAX	: 9.9 +/- 0.6 (V)

3. TEST PROGRAM

3-1. Getting Ready

Attach devices and cables to the unit's connectors as follows.

HDD:	2.5-inch hard disk
SIMMs:	16MB x 2
Plug-in 1:	A PLG100 or PLG150 VL, AN, PF, XG, or DX. (But not that the PLG-100 DX or PLG100 VL have bugs and cannot be used under test mode.)
Plug-in 2:	A PLG100 or PLG150 VL, AN, PF, XG, or DX. (But not that the PLG-100 DX or PLG100 VL have bugs and cannot be used under test mode.)
SCSI:	Zip drive or hard disk drive. Use an MS-DOS-formatted disk. SCSI ID = 5.
VIDEO OUT:	Color CRT monitor supporting NTSC and PAL.
PC keyboard:	PC/AT-compatible keyboard.
MIDI A:	Connect the IN and OUT connectors with a MIDI cable.
MIDI B:	Connect the IN and OUT connectors with a MIDI cable.
TO HOST:	Connect a plug linking send and receive.

3-2. How to enter the Test Program

<MANUAL MODE>

While pressing the [SONG Ⅰ], [SONG PLAYER] buttons, turn on the power switch.

3-3. Proceeding through the Test Program

To select the program number, use the [NEXT] and [BACK] buttons.

To start the test, press the [START/STOP] button.

3-4. About the Display

When testing is in progress, the display shows the test number and test name. For information about other display content, refer to the explanations for the individual tests.

On tests that return an OK/NG judgment: If the test returns an OK, an asterisk (*) appears to the left of the test name (after the test is finished).

3-5. Returning to the Test Select Screen

If at test returns an NG, you can return to the test select screen using any of the following methods.

Method 1	Press the [DEMO] button.
Method 2	C1 Key ON.

Note that if test result was other than NG, you can return to the test select screen by pressing the [START/STOP] button.

3-5. Test Program List

NO.	LCD display	Test Function and Judgement Criteria
1.	001: Version	Displays version for ROM (Main Program, Sub Program, Wave, Style, Parameter) Displays the flash memory protect state
2.	002:Rom Chk1	Checks ROMs (MAIN Program ROM, SUB Program ROM, Voice Parameter ROM, Style ROM) For NG, ROM name is displayed.
3.	003:Ram Chk1	Checks RAMs For NG, RAM name is displayed.
4.	004:Flash Chk1	Checks flash memories For NG, flash memory name is displayed.
5.	005:WaveRomChk1	Checks wave ROM
6.	006:WaveRamChk1	Checks wave RAM
7.	007:SIMM Chk1	Checks SIMM
9.	009:FDD Chk	Checks the floppy disk drive unit Insert the floppy disks one by one (2HD and 2DD). If the floppy disk is not inserted, the LCD will display "NO FD". If you insert the floppy disk whose write-protect switch is on, the LCD will display "PROTECT". If you insert the nonformatted floppy disk, the LCD will display "UNFORMAT".
10.	010:HDD Chk(IDE)	Checks the hard disk If the hard disk drive is not installed, the LCD will display "NO HDD".
11.	011:SCSI Chk	Checks SCSI drive Connect the zip drive or hard disk drive at SCSI ID = 5. If the zip drive or hard disk drive is not connected the LCD will display "NO SCSI". If you insert the zip disk whose write-protect switch is on, the LCD will display "PROTECT".
12.	012:Eff1Ram Chk	Checks the SWP30 #1 RAM Check the C3 note is produced and that there is no distortion.
13.	013:Eff2Ram Chk	Checks the VOP3 RAM Check the C3 note is produced and that there is no distortion.
14.	014:Eff3Ram Chk	Checks the SWP30 #2 RAM Check the C3 note is produced and that there is no distortion.
15.	015:TG1 Chk	Produces the sine wave sequence by changing the sound channels (1ch-64ch) in order from A0 toC6. Confirm that there is no noise. After autoscaling is finished, individual keys can be played. (If playing two or more keys simultaneously, the key pressed first has priority to make a sound.) When the voice switch is pressed, the tone of the voice will sound.
16.	016:TG2 Chk	Produces the sine wave sequence by changing the sound channels (1ch-64ch) in order from A0 toC6. Confirm that there is no noise. After autoscaling is finished, individual keys can be played. (If playing two or more keys simultaneously, the key pressed first has priority to make a sound.) When the voice switch is pressed, the tone of the voice will sound.
17.	017:TG3 Chk (Connection)	Produces the 1 kHz sine wave by changing the tone generators LSI. Confirm that sound is produce at every connection.
18.	018:Pitch Chk	Connect the frequency counter to the [PHONES] jack. Check the pitch and output level. Pitch: 440 Hz +/- 0.2 Hz Output level: +5.4 dBm +/-3 dB
19.	019:Output R	Check the output level. (1 kHz) **• Ver 0.99** PHONES(L): less than -40.0 dBm PHONES(R): +7.5 dBm +/-3 dB LINE OUT(L/L+R): less than -45.0 dBm LINE OUT(R): +19.0 dBm +/-3 dB LOOP SEND(L/L+R): less than -75.0 dBm LOOP SEND(R): +11.3 dBm +/-3 dB **• Above Ver 1.0** PHONES(L): less than -40.0 dBm PHONES(R): +7.5 dBm +/-3 dB LINE OUT(L/L+R): less than -45.0 dBm LINE OUT(R): +16.0 dBm +/-3 dB LOOP SEND(L/L+R): less than -75.0 dBm LOOP SEND(R): +7.5 dBm +/-3 dB

		• **Ver 0.99**		• **Above Ver 1.0**	
		SUB(1):	less than -75.0 dBm	SUB(1):	less than -75.0 dBm
		SUB(2):	less than -75.0 dBm	SUB(2):	less than -75.0 dBm
		SUB(3):	less than -75.0 dBm	SUB(3):	less than -75.0 dBm
		SUB(4):	less than -75.0 dBm	SUB(4):	less than -75.0 dBm
20.	020:Output L	Check the output level. (1 kHz)			
		• **Ver 0.99**		• **Above Ver 1.0**	
		PHONES(L):	+7.5 dBm +/-3 dB	PHONES(L):	+7.5 dBm +/-3 dB
		PHONES(R):	less than -40.0 dBm	PHONES(R):	less than -40.0 dBm
		LINE OUT(L/L+R):	+19.0 dBm +/-3 dB	LINE OUT(L/L+R):	+16.0 dBm +/-3 dB
		LINE OUT(R):	less than -45.0 dBm	LINE OUT(R):	less than -45.0 dBm
		LOOP SEND(L/L+R):	+11.3 dBm +/-3 dB	LOOP SEND(L/L+R):	+7.5 dBm +/-3 dB
		LOOP SEND(R):	less than -75.0 dBm	LOOP SEND(R):	less than -75.0 dBm
		SUB(1):	less than -75.0 dBm	SUB(1):	less than -75.0 dBm
		SUB(2):	less than -75.0 dBm	SUB(2):	less than -75.0 dBm
		SUB(3):	less than -75.0 dBm	SUB(3):	less than -75.0 dBm
		SUB(4):	less than -75.0 dBm	SUB(4):	less than -75.0 dBm
21.	021:Oputput Sub1	Check the Sub1 output level. (1 kHz)			
		PHONES(L):	less than -65.0 dBm	LOOP SEND(R):	less than -75.0 dBm
		PHONES(R):	less than -65.0 dBm	SUB(1):	+11.0 dBm +/-3 dB
		LINE OUT(L/L+R):	less than -70.0 dBm	SUB(2):	less than -75.0 dBm
		LINE OUT(R):	less than -70.0 dBm	SUB(3):	less than -75.0 dBm
		LOOP SEND(L/L+R):	less than -75.0 dBm	SUB(4):	less than -75.0 dBm
22.	022:Output Sub2	Check the Sub2 output level. (1 kHz)			
		PHONES(L):	less than -65.0 dBm	LOOP SEND(R):	less than -75.0 dBm
		PHONES(R):	less than -65.0 dBm	SUB(1):	less than -75.0 dBm
		LINE OUT(L/L+R):	less than -70.0 dBm	SUB(2):	+11.0 dBm +/-3 dB
		LINE OUT(R):	less than -70.0 dBm	SUB(3):	less than -75.0 dBm
		LOOP SEND(L/L+R):	less than -75.0 dBm	SUB(4):	less than -75.0 dBm
23.	023:Output Sub3	Check the Sub3 output level. (1 kHz)			
		PHONES(L):	less than -65.0 dBm	LOOP SEND(R):	less than -75.0 dBm
		PHONES(R):	less than -65.0 dBm	SUB(1):	less than -75.0 dBm
		LINE OUT(L/L+R):	less than -70.0 dBm	SUB(2):	less than -75.0 dBm
		LINE OUT(R):	less than -70.0 dBm	SUB(3):	+11.0 dBm +/-3 dB
		LOOP SEND(L/L+R):	less than -75.0 dBm	SUB(4):	less than -75.0 dBm
24.	024:Output Sub4	Check the Sub4 output level. (1 kHz)			
		PHONES(L):	less than -65.0 dBm	LOOP SEND(R):	less than -75.0 dBm
		PHONES(R):	less than -65.0 dBm	SUB(1):	less than -75.0 dBm
		LINE OUT(L/L+R):	less than -70.0 dBm	SUB(2):	less than -75.0 dBm
		LINE OUT(R):	less than -70.0 dBm	SUB(3):	less than -75.0 dBm
		LOOP SEND(L/L+R):	less than -75.0 dBm	SUB(4):	+11.0 dBm +/-3 dB
27.	027:Plug in 1	Check the Plug in 1 output level. (1 kHz)			
		PHONES(L, R), LINE OUT(L/L+R, R), LOOP SEND(L/L+R, R): Refer to “2-2. PLUG IN Board Output Level ”			
		SUB(1): less than -75.0 dBm		SUB(3): less than -75.0 dBm	
		SUB(2): less than -75.0 dBm		SUB(4): less than -75.0 dBm	
28.	028:Plug in 2	Check the Plug in 2 output level. (1 kHz)			
		PHONES(L, R), LINE OUT(L/L+R, R), LOOP SEND(L/L+R, R): Refer to “2-2. PLUG IN Board Output Level ”			
		SUB(1): less than -75.0 dBm		SUB(3): less than -75.0 dBm	
		SUB(2): less than -75.0 dBm		SUB(4): less than -75.0 dBm	
29.	029:EQ Low	Check the output level of EQ-Low frequency. (65.4 Hz (C1))			
		• **Ver 0.99**		• **Above Ver 1.0**	
		PHONES(L, R):	+6.8 dBm +/-3 dB	PHONES(L, R):	+5.0 dBm +/-3 dB
		LINE OUT(L/L+R, R):	+15.8 dBm +/-3 dB	LINE OUT(L/L+R, R):	+13.5 dBm +/-3 dB
		LOOP SEND(L/L+R, R):	+7.1 dBm +/-3 dB	LOOP SEND(L/L+R, R):	+5.0 dBm +/-3 dB
		SUB(1, 2, 3, 4):	+13.8 dBm +/-3 dB	SUB(1, 2, 3, 4):	+14.5 dBm +/-3 dB

30.	030:EQ Mid	Check the output level of EQ-Mid frequency. (523 Hz (C4)) • **Ver 0.99** PHONES(L, R): +8.1 dBm +/-3 dB LINE OUT(L/L+R, R): +16.6 dBm +/-3 dB LOOP SEND(L/L+R, R): +8.0 dBm +/-3 dB SUB(1, 2, 3, 4): +14.8 dBm +/-3 dB • **Above Ver 1.0** PHONES(L, R): +5.0 dBm +/-3 dB LINE OUT(L/L+R, R): +13.5 dBm +/-3 dB LOOP SEND(L/L+R, R): +5.0 dBm +/-3 dB SUB(1, 2, 3, 4): +14.5 dBm +/-3 dB
31.	031:EQ High	Check the output level of EQ-High frequency. (4186 Hz (C7)) • **Ver 0.99** PHONES(L, R): +7.2 dBm +/-3 dB LINE OUT(L/L+R, R): +15.6 dBm +/-3 dB LOOP SEND(L/L+R, R): +7.2 dBm +/-3 dB SUB(1, 2, 3, 4): +13.9 dBm +/-3 dB • **Above Ver 1.0** PHONES(L, R): +4.5 dBm +/-3 dB LINE OUT(L/L+R, R): +13.5 dBm +/-3 dB LOOP SEND(L/L+R, R): +5.0 dBm +/-3 dB SUB(1, 2, 3, 4): +14.5 dBm +/-3 dB
33.	033:MUTE	When the [NEXT] button is pressed, check that the 1 kHz sine wave tone will stop from excluding the speaker and [LOOP SEND(L/L+R)], and the [BACK] button is pressed, the sound will appear. If the plug is inserted into [LOOP SEND(L/L+R)], the tone from [LINE OUT] terminals will stop.
34.	034:D/A Noise	Checks D/A converter noise level. Press any key on the keyboard. The PIANO voice will sound at minimum volume and sustain on. At this time, confirm that there is no distortion.
35.	035:SW.LED Chk	Check the switches and the LEDs on the panel. Press the switch that is displayed on the LCD. When the switch is pressed, a pre-assigned note is output. (With some switches, the corresponding LED will light up.) Also check the dial by turning it; the LCD should display "OK". The LCD will display the numbers from 50 -100 when turning the dial clockwise from the center, and the LCD will display the numbers from 0 -50 when turning the dial counter-clockwise from the center.
36.	036:All LED On	Check that all panel LEDs are lit except [OVER] and [SIGNAL] LEDs.
37.	037:Red LED On	Check that all red panel LEDs are lit except [OVER] LED.
38.	038:Green LED On	Check that all green panel LEDs are lit except [SIGNAL] LED.
43.	043:All LCD On	Check that all LCD dots are on.
44.	044:All LCD Off	Check that all LCD dots are off.
46.	046:Pedal1 Chk	Connect the foot switch into the [FOOT PEDAL SWITCH 1] terminal. Check that the C3 note sound is produced when the pedal is depressed, and that the C4 note sound is produced when the pedal is released. The test results will appear on the LCD.
47.	047:Pedal2 Chk	Connect the foot switch into the [FOOT PEDAL SWITCH 2] terminal. Check that the C3 note sound is produced when the pedal is depressed, and that the C4 note sound is produced when the pedal is released. The test results will appear on the LCD.
48.	048:Indv.Out Chk	Check that the LCD displays "OK" and the C3 note sound is produced when insert and pull out the plugs on [SUB (1)], [SUB (2)], [SUB (3)] and [SUB (4)] terminals in that order.
49.	049:PBWheel Chk	Check that the C3 note sound is produced when the PITCH BEND wheel is at minimum and the C4 note sound is produced when it is at maximum.
50.	050:ModWheelChk	Check that the C3 note sound is produced when the MODULATION wheel is at minimum and the C4 note sound is produced when it is at maximum.
51.	051:ExpPedal Chk	Connect the foot pedal into the [FOOT PEDAL VOLUME] terminal. Check that the C3 note sound is produced when the foot pedal is at minimum and the C4 note sound is produced when it is at maximum. The test results and A/D (0~127) will appear on the LCD.
52.	052:AfterTouch Chk	Check that the C3 note sound is produced when any key on the keyboard is pressed, and check that the C4 note sound is produced when the key is released. The test results and A/D (0~127) will appear on the LCD.
53.	053:Midi Chk	After connecting the MIDI IN jack and MIDI OUT jack (both A and B) with a MIDI cable, execute the test. Set the HOST SELECT switch to MIDI. Check that the C3 and C4 note sounds are produced and the LCD displays "OK". (MIDI-A: C3, MIDI-B: C4) If there is no output after one second, it is judged NG.
54.	054:To Host Chk	Connect pin 3 to pin 5 and pin 6 to pin 8 of the TO HOST terminal, and execute the test. Check that the following note sounds when changing the HOST SELECT switch position according to the LCD indication; the LCD will display "OK". (PC1: note C3; PC2: note C4; MAC: note C5) If there is no output after one second, it is judged NG.

55.	055:MIC Chk	Enter the sound into the [MIC/LINE IN] terminal. Check that there is no abnormal noise. Check that the output sound is one octave above the harmonizer when the [NEXT] button is pressed, and then check that the output sound is as before when the [BACK] button is pressed.
57.	057:Rom Chk2	Checks ROMs that are connected to CPU
58.	058:Ram Chk2	Checks RAMs that are connected to CPU
59.	059:Flash Chk2	Checks flash memorys that are connected to CPU
60.	060:WaveROM Chk2	Checks Wave ROM
61.	061:WaveRam Chk2	Checks Wave RAM
62.	062:SIMM Ch2	Checks SIMM
65.	065:VideoOut NTSC RED	Using the NTSC signal to check that the red characters are displayed on the [VIDEO OUT] terminal.
66.	066:VideoOut NTSC GREEN	Using the NTSC signal to check that the green characters are displayed on the [VIDEO OUT] terminal.
67.	067:VideoOut NTSC BLUE	Using the NTSC signal to check that the blue characters are displayed on the [VIDEO OUT] terminal.
68.	068:VideoOut PAL RED	Using the PAL signal to check that the red characters are displayed on the [VIDEO OUT] terminal.
69.	069:VideoOut PAL GREEN	Using the PAL signal to check that the green characters are displayed on the [VIDEO OUT] terminal.
70.	070:VideoOut PAL BLUE	Using the PAL signal to check that the blue characters are displayed on the [VIDEO OUT] terminal.
71.	071:PC Keyboard Chk	Connect the PC keyboard into the [PC KEYBOARD] terminal. The test results will appear on the LCD.
72.	072:Data Ver. Chk	After reading in the system backup disk, check the version for each data in flash memory. (STYLE, CUSTOM VOICE, OTS, MDB, REGIST., PAD)
73.	073:Factory Set	All RAMs are initialized and reset to factory setting data when this test is executed.
74.	074:Plug-in Data Init	Plug-in Voice RAM are initialized when this test is executed. Be sure to carry out the operation of the initialization before you use the 9000Pro after installing the plug-in board.
75.	075:Test Exit	Exit from the test program when this test is executed.

Note: 0 dBm=0.775V

- **Power On Reset**

  All RAMs are initialized and reset to factory setting data when the power is turned on while pressing the [DEMO] button.

MIDI IMPLEMENTATION CHART

YAMAHA [Professional Workstation] Date:9-SEP-1999
Model 9000Pro MIDI Implementation Chart Version : 1.0

Function...	Transmitted	Recognized	Remarks
Basic Default	1 - 16 *1	1 - 16 *2	
Channel Changed	1 - 16 *1	1 - 16 *2	
Default	3	3	
Mode Messages	x	x	
Altered	**********	x	
Note	0 - 127	0 - 127	
Number : True voice	**********	0 - 127	
Velocity Note ON	o 9nH,v=1-127	o 9nH,v=1-127	
Note OFF	x 9nH,v=0	x	
After Key's	x	x	
Touch Ch's	o	o	
Pitch Bend	o	o 0-24 semi	
0,32	o	o *1	Bank Select
1,5,7,10,11	o	o *1	
6,38	o	o *1	Data Entry
64-67	o	o *1	
Control 71,74	o	o *1	Sound Controller
72,73	x *3	o *1	Sound Controller
Change 84	x *3	o *1	Portamento Cntrl
91,93,94	o	o *1	Effect Depth
96,97	x	o *1	Data Inc,Dec
98,99	o	o *1	NRPN LSB,MSB
100,101	o	o *1	RPN LSB,MSB
Prog	o 0 - 127	o 0 - 127	
Change : True #	**********		
System Exclusive	o	o	
: Song Pos.	x	x	
Common : Song Sel.	x	x	
: Tune	x	x	
System :Clock	o	o	
Real Time:Commands	o	o	
Aux :All Sound OFF	x	o(120,126,127)	
:Reset All Cntrls	x	o(121)	
:Local ON/OFF	x	x	
:All Notes OFF	x	o(123-125)	
Mes- :Active Sense	o	o	
sages:Reset	x	x	
Notes: *1,*2,*3 see next page.			

Mode 1 : OMNI ON , POLY Mode 2 : OMNI ON ,MONO o : Yes
Mode 3 : OMNI OFF, POLY Mode 4 : OMNI OFF,MONO x : No

**1 The tracks for each channel can be selected on the panel.*

**2 The tone generator normally functions as a 16-channel multi-timbre tone generator in response to MIDI input. MIDI messages therefore do not normally affect the panel voices or other panel settings.*
The MIDI messages listed below, however, do affect the panel voice, style, Multi Pad, and song settings.

- *MIDI MASTER TUNE, XG System parameter MASTER TUNE*
- *XG System parameter TRANSPOSE*
- *System exclusive messages which change the REVERB, CHORUS or DSP EFFECT settings.*
- *XG MULTI EQ parameters*

Also, the MIDI messages affect the panel settings when one of the following MIDI reception modes is selected.
These modes can be selected on the panel.

- *RIGHT1, RIGHT2, RIGHT3, LEFT, KEYBOARD, ACMP RHYTHM1, ACMP RHYTHM2, ACMP BASS, ACMP CHORD1, ACMP CHORD2, ACMP PAD, ACMP PHRASE1, ACMP PHRASE2*
- *CHORD*
- *ROOT*
- *OFF*

**3 These Control Change Messages are not transmitted by 9000Pro panel operation, but may be transmitted by the ACCOMPANIMENT or SONG playing.*

MIDI DATA FORMAT

Many MIDI messages listed in the MIDI Data Format are expressed in decimal numbers, binary numbers and hexadecimal numbers. Hexadecimal numbers may include the letter “H” as a suffix. Also, “n” can freely be defined as any whole number.
To enter data/values, refer to the table below.

Decimal	Hexadecimal	Binary
0	00	0000 0000
1	01	0000 0001
2	02	0000 0010
3	03	0000 0011
4	04	0000 0100
5	05	0000 0101
6	06	0000 0110
7	07	0000 0111
8	08	0000 1000
9	09	0000 1001
10	0A	0000 1010
11	0B	0000 1011
12	0C	0000 1100
13	0D	0000 1101
14	0E	0000 1110
15	0F	0000 1111
16	10	0001 0000
17	11	0001 0001
18	12	0001 0010
19	13	0001 0011
20	14	0001 0100
21	15	0001 0101
22	16	0001 0110
23	17	0001 0111
24	18	0001 1000
25	19	0001 1001
26	1A	0001 1010
27	1B	0001 1011
28	1C	0001 1100
29	1D	0001 1101
30	1E	0001 1110
31	1F	0001 1111

Decimal	Hexadecimal	Binary
32	20	0010 0000
33	21	0010 0001
34	22	0010 0010
35	23	0010 0011
36	24	0010 0100
37	25	0010 0101
38	26	0010 0110
39	27	0010 0111
40	28	0010 1000
41	29	0010 1001
42	2A	0010 1010
43	2B	0010 1011
44	2C	0010 1100
45	2D	0010 1101
46	2E	0010 1110
47	2F	0010 1111
48	30	0011 0000
49	31	0011 0001
50	32	0011 0010
51	33	0011 0011
52	34	0011 0100
53	35	0011 0101
54	36	0011 0110
55	37	0011 0111
56	38	0011 1000
57	39	0011 1001
58	3A	0011 1010
59	3B	0011 1011
60	3C	0011 1100
61	3D	0011 1101
62	3E	0011 1110
63	3F	0011 1111

Decimal	Hexadecimal	Binary
64	40	0100 0000
65	41	0100 0001
66	42	0100 0010
67	43	0100 0011
68	44	0100 0100
69	45	0100 0101
70	46	0100 0110
71	47	0100 0111
72	48	0100 1000
73	49	0100 1001
74	4A	0100 1010
75	4B	0100 1011
76	4C	0100 1100
77	4D	0100 1101
78	4E	0100 1110
79	4F	0100 1111
80	50	0101 0000
81	51	0101 0001
82	52	0101 0010
83	53	0101 0011
84	54	0101 0100
85	55	0101 0101
86	56	0101 0110
87	57	0101 0111
88	58	0101 1000
89	59	0101 1001
90	5A	0101 1010
91	5B	0101 1011
92	5C	0101 1100
93	5D	0101 1101
94	5E	0101 1110
95	5F	0101 1111

Decimal	Hexadecimal	Binary
96	60	0110 0000
97	61	0110 0001
98	62	0110 0010
99	63	0110 0011
100	64	0110 0100
101	65	0110 0101
102	66	0110 0110
103	67	0110 0111
104	68	0110 1000
105	69	0110 1001
106	6A	0110 1010
107	6B	0110 1011
108	6C	0110 1100
109	6D	0110 1101
110	6E	0110 1110
111	6F	0110 1111
112	70	0111 0000
113	71	0111 0001
114	72	0111 0010
115	73	0111 0011
116	74	0111 0100
117	75	0111 0101
118	76	0111 0110
119	77	0111 0111
120	78	0111 1000
121	79	0111 1001
122	7A	0111 1010
123	7B	0111 1011
124	7C	0111 1100
125	7D	0111 1101
126	7E	0111 1110
127	7F	0111 1111

- Except the table above, for example 144-159(decimal)/9nH/1001 0000-1001 1111(binary) denotes the Note On Message for each channel (1-16). 176-191/BnH/1011 0000-1011 1111 denotes the Control Change Message for each channel (1-16). 192-207/CnH/1100 0000-1100 1111 denotes the Program Change Message for each channel (1-16). 240/FOH/1111 0000 denotes the start of a System Exclusive Message. 247/F7H/1111 0111 denotes the end of a System Exclusive Message.
- aaH (hexidecimal)/0aaaaaaa (binary) denotes the data address. The address contains High, Mid, and Low.
- bbH/0bbbbbbb denotes the byte count.
- ccH/0ccccccc denotes the check sum.
- ddH/0ddddddd denotes the data/value.

Channel/Mode/Realtime Messages

o : available

MIDI Events	Status byte		1st Data byte			2nd Data byte			Recognized						
	Status		Data	(HEX)	Parameter	Data	(HEX)	Parameter	XG/ GM	Key- board	R1	R2	R3	Left	Acmp
Key Off	8nH	(n:channel no.)	kk		Key no. (0~127)	vv		Velocity(0~127)	o	o	o	o	o	o	o
Key On	9nH		kk		Key no. (0~127)	vv		Key On :vv=1~127 Key Off :vv=0	o	o	o	o	o	o	o
Control Change	BnH		0	(00H)	Bank Select MSB	0 64 126 127	(00H) (40H) (7EH) (7FH)	Normal SFX voice SFX kit Drum	o	o	o	o	o	o	o
			32	(20H)	Bank Select LSB	0~ 112~	(0...) (70H...)	XG voice Panel voice							
			1	(01H)	Modulation	0~127	(...7FH)		o	o	o	o	o	o	o
			5	(05H)	Portament Time	0~127	(...7FH)		o	o	o	o	o	o	x
			6	(06H)	Data Entry MSB	0~127	(...7FH)		o	o	o	o	o	o	o
			38	(26H)	Data Entry LSB	0~127	(...7FH)								
			7	(07H)	Main Volume	0~127	(...7FH)		o	o	o	o	o	o	o
			10	(0AH)	Panpot	0~127	(...7FH)		o	o	o	o	o	o	o
			11	(0BH)	Expression	0~127	(...7FH)		o	o	o	o	o	o	o
			64	(40H)	Sustain(Damper)	0~127	(...7FH)		o	o	o	o	o	o	x
			65	(41H)	Portament	0~127	(...7FH)		o	o	o	o	o	o	x
			66	(42H)	Sostenuto	0~127	(...7FH)		o	o	o	o	o	o	x
			67	(43H)	Soft Pedal	0~127	(...7FH)		o	o	o	o	o	o	x
			71	(47H)	Harmonic Content	0~127	(...7FH)		o	o	o	o	o	o	o
		The NRPN also contains these parame- ters.	72	(48H)	Release Time	0~127	(...7FH)		o	o	o	o	o	o	o
			73	(49H)	Attack Time	0~127	(...7FH)		o	o	o	o	o	o	o
			74	(4AH)	Brightness	0~127	(...7FH)		o	o	o	o	o	o	o
			84	(54H)	Portamento Control	0~127	(...7FH)		o	o	o	o	o	o	o
			91	(5BH)	Effect1 Depth (Reverb Send Level)	0~127	(...7FH)		o	o	o	o	o	o	o
			93	(5DH)	Effect3 Depth (Chorus Send Level)	0~127	(...7FH)		o	o	o	o	o	o	o
			94	(5EH)	Effect4 Depth (Variation Send Level)	0~127	(...7FH)		o	o	o	o	o	o	o
			96	(60H)	Increment	0~127	(...7FH)		o	x	o	o	o	o	o
			97	(61H)	Decrement	0~127	(...7FH)								
			98	(62H)	NRPN LSB	0~127	(...7FH)		o	x	o	o	o	o	o
			99	(63H)	NRPN MSB	0~127	(...7FH)								
			100	(64H)	RPN LSB	0~127	(...7FH)		o	o	o	o	o	o	o
			101	(65H)	RPN MSB	0~127	(...7FH)								
Mode Message	BnH		120	(78H)	All sound off	0			o	o	o	o	o	o	o
			121	(79H)	Reset all controller	0			o	x	x	x	x	x	x
			122	(7AH)	Local control	dd		dd=00H: Off 7FH: On	x	x	x	x	x	x	x
			123	(7BH)	All note off	0			o	o	o	o	o	o	o
			124	(7CH)	OMNI OFF	0			o	o	o	o	o	o	o
			125	(7DH)	OMNI ON	0			o	o	o	o	o	o	o
			126	(7EH)	MONO	0~16	(...10H)		o	x	x	x	x	x	x
			127	(7FH)	POLY	0			o	x	x	x	x	x	x
Program Change	CnH		pp		Voice number(0~127)	-		-	o	o	o	o	o	o	o
Channel After Touch	DnH		vv			-			o	o	o	o	o	o	x
Polyphonic After Tch	AnH		kk			vv			x	x	x	x	x	x	x
Pich Bend Change	EnH		cc		LS Byte	dd		MS Byte	o	o	o	o	o	o	o
RealTime Message	F8H	MIDI Clock	-			-			o	o	o	o	o	o	o
	FAH	Start	-			-			o	o	o	o	o	o	o
	FBH	Continue	-			-			x	x	x	x	x	x	x
	FCH	Stop	-			-			o	o	o	o	o	o	o
	FEH	Active Sens	-			-			o	o	o	o	o	o	o
	FFH	System Reset	-			-			x	x	x	x	x	x	x

<Table 1-1-1> NRPN

o : available

NRPN		DATA ENTRY		Parameter	Recognized						
MSB	LSB	MSB	LSB		XG/GM	Keyboard	R1	R2	R3	Left	Acmp
01H	08H	mmH	--	Vibrato Rate	o	x	o	o	o	o	o
01H	09H	mmH	--	Vibrato Depth	o	x	o	o	o	o	o
01H	0AH	mmH	--	Vibrato Delay	o	x	x	x	x	x	o
01H	20H	mmH	--	Filter Cutoff Frequency	o	x	x	x	x	x	o
01H	21H	mmH	--	Filter Resonance	o	x	x	x	x	x	o
01H	24H	mmH	--	HPF Cutoff Frequency	x	x	x	x	x	x	x
01H	30H	mmH	--	EQ BASS	o	x	x	x	x	x	o
01H	31H	mmH	--	EQ TREBLE	o	x	x	x	x	x	o
01H	34H	mmH	--	EQ BASS Frequency	o	x	x	x	x	x	o
01H	35H	mmH	--	EQ TREBLE Frequency	o	x	x	x	x	x	o
01H	63H	mmH	--	EG Attack Time	o	x	x	x	x	x	o
01H	64H	mmH	--	EG Decay Time	o	x	x	x	x	x	o
01H	66H	mmH	--	EG Release	o	x	x	x	x	x	o
14H	rrH	mmH	--	Drum Filter Cutoff Frequency	o	x	x	x	x	x	o
15H	rrH	mmH	--	Drum Filter Resonance	o	x	x	x	x	x	o
16H	rrH	mmH	--	Drum EG Attack Rate	o	x	x	x	x	x	o
17H	rrH	mmH	--	Drum EG Decay Rate	o	x	x	x	x	x	o
18H	rrH	mmH	--	Drum Pitch Coarse	o	x	x	x	x	x	o
19H	rrH	mmH	--	Drum Pitch Fine	o	x	x	x	x	x	o
1AH	rrH	mmH	--	Drum Level	o	x	x	x	x	x	o
1CH	rrH	mmH	--	Drum Pan	o	x	x	x	x	x	o
1DH	rrH	mmH	--	Drum Reverb Send Level	o	x	x	x	x	x	o
1EH	rrH	mmH	--	Drum Chorus Send Level	o	x	x	x	x	x	o
1FH	rrH	mmH	--	Drum Variation Send Level	o	x	x	x	x	x	o

NRPN MSB : 14H-1FH(for drums) message is accepted as long as the channel is set with a drum voice.
Data Entry LSB : Ignored.

<Table 1-1-2> NRPN (VocalHarmony)

NRPN		DATA ENTRY		Parameter	Recognized						
MSB	LSB	MSB	LSB		XG/GM	Keyboard	R1	R2	R3	Left	Acmp
00H	00H	mmH	--	Harmony Mute	o	x	x	x	x	x	x
00H	01H	mmH	--	Harmony Mode	o	x	x	x	x	x	x
00H	02H	mmH	--	Vocoder Mode Parameter	o	x	x	x	x	x	x
00H	03H	mmH	--	Chromatic Mode Parameter	o	x	x	x	x	x	x
00H	04H	mmH	--	Detune Mode Parameter	o	x	x	x	x	x	x
00H	05H	mmH	--	Chordal Mode Parameter	o	x	x	x	x	x	x
01H	1AH	mmH	--	Detune Modulation	o	x	x	x	x	x	x
02H	00H	mmH	--	Harmony Gender Type	o	x	x	x	x	x	x
02H	01H	mmH	--	Auto Upper Gender Threshold	o	x	x	x	x	x	x
02H	02H	mmH	--	Auto Lower Gender Threshold	o	x	x	x	x	x	x
02H	03H	mmH	--	Upper Gender Amound	o	x	x	x	x	x	x
02H	04H	mmH	--	Lower Gender Amound	o	x	x	x	x	x	x
02H	10H	mmH	--	Harmony1 Volume	o	x	x	x	x	x	x
02H	11H	mmH	--	Harmony2 Volume	o	x	x	x	x	x	x
02H	12H	mmH	--	Harmony3 Volume	o	x	x	x	x	x	x
02H	20H	mmH	--	Harmony1 Pan	o	x	x	x	x	x	x
02H	21H	mmH	--	Harmony2 Pan	o	x	x	x	x	x	x
02H	22H	mmH	--	Harmony3 Pan	o	x	x	x	x	x	x
02H	30H	mmH	--	Harmony1 Detune	o	x	x	x	x	x	x
02H	31H	mmH	--	Harmony2 Detune	o	x	x	x	x	x	x
02H	32H	mmH	--	Harmony3 Detune	o	x	x	x	x	x	x
03H	00H	mmH	--	Lead Gender Type	o	x	x	x	x	x	x
03H	01H	mmH	--	Lead Gender Amount	o	x	x	x	x	x	x

<Table 1-2> RPN

RPN		DATA ENTRY		Parameter	Recognized						
MSB	LSB	MSB	LSB		XG/GM	Keyboard	R1	R2	R3	Left	Acmp
00H	00H	mmH	--	Pitch Bend Sensitivity	o	o	o	o	o	o	o
00H	01H	mmH	llH	Fine Tune	o	o	o	o	o	o	o
00H	02H	mmH	--	Coarse Tune	o	o	o	o	o	o	o
7FH	7FH	--	--	Null	o	o	o	o	o	o	o

System Exclusive Messages

System Exclusive Messages

<table>
<tr><th>Accompaniment Control</th><th>Data Format</th><th>Recognized</th></tr>
<tr><td>Section Control</td><td>F0H 43H 7EH 00H ss dd F7H
11110000 F0 = Exclusive status
01000011 43 = YAMAHA ID
01111110 7E = Style
00000000 00 =
0sssssss ss = Switch No.
00H-01H: INTRO II
02H-03H: INTRO III
04H-07H: INTRO I
08H: MAIN A
09H: MAIN B
0AH: MAIN C
0BH-0FH: MAIN D
10H: FILL IN A
11H: FILL IN B
12H: FILL IN C
13H-17H: FILL IN D
18H: BREAK FILL A
19H: BREAK FILL B
1AH BREAK FILL C
1BH-1FH: BREAK FILL D
20H-21H: ENDING II
22H-23H: ENDING III
24H-27H: ENDING I
0ddddddd dd = Swith On/Off
00H Off
7FH On
11111110 F7 = End of Exclusive</td><td>o</td></tr>
<tr><td>Tempo Control</td><td>F0H 43H 7EH 01H t4 t3 t2 t1 F7H
11110000 F0 = Exclusive status
01000011 43 = YAMAHA ID
01111110 7E = Style
00000001 01 =
0ttttttt t4 = tempo4
0ttttttt t3 = tempo3
0ttttttt t2 = tempo2
0ttttttt t1 = tempo1
11111110 F7 = End of Exclusive</td><td>o</td></tr>
<tr><td>Chord Control</td><td>F0H 43H 7EH tt dd … F7H
Type1 (tt=02)
11110000 F0 = Exclusive status
01000011 43 = YAMAHA ID
01111110 7E = Style
00000010 02 = type 1(tt)
0ddddddd dd = chord root(cr)
0ddddddd dd = chord type(ct)
0ddddddd dd = bass note(bn)
0ddddddd dd = bass type(bt)

cr : Chord Root 0fffnnnn
fff: b or #, nnnn: note(root)
0000nnnn 0n bbb
0001nnnn 1n bb
0010nnnn 2n b
0011nnnn 3n natural
0100nnnn 4n #
0101nnnn 5n ##
0110nnnn 6n ###
0fff0000 x0 reserved
0fff0001 x1 C
0fff0010 x2 D
0fff0011 x3 E
0fff0100 x4 F
0fff0101 x5 G
0fff0110 x6 A
0fff0111 x7 B

ct : Chord Type 0 - 34,127
00000000 00 0 Maj
00000001 01 1 Maj6
00000010 02 2 Maj7
00000011 03 3 Maj7(#11)
00000100 04 4 Maj(9)
00000101 05 5 Maj7(9)
00000110 06 6 Maj6(9)
00000111 07 7 aug
00001000 08 8 min
00001001 09 9 min6
00001010 0A 10 min7
00001011 0B 11 min7b5
00001100 0C 12 min(9)
00001101 0D 13 min7(9)
00001110 0E 14 min7(11)
00001111 0F 15 minMaj7
00010000 10 16 minMaj7(9)
00010001 11 17 dim
00010010 12 18 dim7
00010011 13 19 7th
00010100 14 20 7sus4
00010101 15 21 7b5
00010110 16 22 7(9)
00010111 17 23 7(#11)
00011000 18 24 7(13)
00011001 19 25 7(b9)
00011010 1A 26 7(b13)
00011011 1B 27 7(#9)
00011100 1C 28 Maj7aug
00011101 1D 29 7aug
00011110 1E 30 1+8
00011111 1F 31 1+5
00100000 20 32 sus4
00100001 21 33 1+2+5
00100010 22 34 cc</td><td>o</td></tr>
<tr><td></td><td>bn : On Bass Chord Same as Chord root,
127:No bass chord

bt : Bass Chord Same as Chord type
127:No bass chord

11111110 F7 = End of Exclusive</td><td></td></tr>
</table>

	Type2 (tt=03) (Receive only) 11110000 F0 = Exclusive status 01000011 43 = YAMAHA ID 01111110 7E = 00000011 03 = type 2(tt) 0ddddddd dd = note1 0ddddddd dd = note2 0ddddddd dd = note3 : : : 0ddddddd dd = ...note10 11111110 F7 = End of Exclusive	o

System Exclusive Messages (Universal System Exclusive)

MIDI Event	Data Format	Recognized
MIDI Master Volume	F0H 7FH 7FH 04H 01H ll mm F7H 11110000 F0 = Exclusive status 01111111 7F = Universal Real Time 01111111 7F = ID of target device 00000100 04 = Sub-ID #1=Device Control Message 00000001 01 = Sub-ID #2=Master Volume 0lllllll ll = Volume LSB 0mmmmmmm mm = Volume MSB 11110111 F7 = End of Exclusive or F0H 7FH XN 04H 01H ll mm F7H 11110000 F0 = Exclusive status 01111111 7F = Universal Real Time 0xxxnnnn XN = When N is received N=0-F,whichever is received. X=ignored 00000100 04 = Sub-ID #1=Device Control Message 00000001 01 = Sub-ID #2=Master Volume 0lllllll ll = Volume LSB 0mmmmmmm mm = Volume MSB 11110111 F7 = End of Exclusive	o
GM System On	F0H 7EH 7FH 09H 01H F7H 11110000 F0 = Exclusive status 01111110 7E = Universal Non-Real Time 01111111 7F = ID of target device 00001001 09 = Sub-ID #1=General MIDI Message 00000001 01 = Sub-ID #2=General MIDI On 11110111 F7 = End of Exclusive or F0H 7EH XN 09H 01H F7H 11110000 F0 = Exclusive status 01111110 7E = Universal Non-Real Time 0xxxnnnn XN = When N is received N=0-F,whichever is received. X=ignored 00001001 09 = Sub-ID #1=General MIDI Message 00000001 01 = Sub-ID #2=General MIDI On 11110111 F7 = End of Exclusive	o

System Exclusive Messages (XG standard)

MIDI Event	Data Format	Recognized
XG Parameter Change	F0H 43H 1nH 4CH hh mm ll dd ... F7H 11110000 F0 = Exclusive status 01000011 43 = YAMAHA ID 0001nnnn 1n = Device Number n=always 0(when transmit), n=0-F(when recieve) 01001100 4C = Model ID 0hhhhhhh hh = Address High 0mmmmmmm mm = Address Mid 0lllllll ll = Address Low 0ddddddd dd = Data : : 11110111 F7 = End of Exclusive	o
Bulk Dump	F0H 43H 0nH 4CH aa bb hh mm ll dd ... dd cc F7H 11110000 F0 = Exclusive status 01000011 43 = YAMAHA ID 0000nnnn 0n = Device Number n=always 0(when transmit), n=0-F(when recieve) 01001100 4C = Model ID 0aaaaaaa aa = Byte Count MSB 0bbbbbbb bb = Byte Count LSB 0hhhhhhh hh = Address High 0mmmmmmm mm = Address Mid 0lllllll ll = Address Low 0ddddddd dd = Data : : 0ddddddd dd = Data 0ccccccc cc = Checksum 11110111 F7 = End of Exclusive	o

Parameter Request	F0H 43H 3nH 4CH hh mm ll F7H 11110000 F0 = Exclusive status 01000011 43 = YAMAHA ID 0011nnnn 3n = Device Number n=always 0(when transmit), n=0-F(when recieve) 01001100 4C = Model ID 0hhhhhhh hh = Address High 0mmmmmmm mm = Address Mid 0lllllll ll = Address Low 11110111 F7 = End of Exclusive	o
Dump Request	F0H 43H 2nH 4CH hh mm ll F7H 11110000 F0 = Exclusive status 01000011 43 = YAMAHA ID 0010nnnn 2n = Device Number n=always 0(when transmit), n=0-F(when recieve) 01001100 4C = Model ID 0hhhhhhh hh = Address High 0mmmmmmm mm = Address Mid 0lllllll ll = Address Low 11110111 F7 = End of Exclusive	o

System Exclusive Messages (Clavinova compliance)

MIDI Event	Data Format	Recognized
Internal Clock	F0H 43H 73H 01H 02H F7H 00000010 02 = Internal Clock Substatus	o
External Clock	F0H 43H 73H 01H 03H F7H 00000011 03 = External Clock Substatus	o
Organ Flutes data Bulk Dump	F0H 43H 73H 01H 06H 0BH 00H 00H 01H 06H 0nH [BULK DATA] sum F7H 01H Model ID (Clavinova common ID) 06H Bulk ID 0BH Bulk No. (Organ Flutes data Bulk Dump) 00H,00H,01H,06H Data Length :16bytes 1st 0nH n: channel No. [BULK DATA] Organ Flutes data 2nd Footage [1'] 00 - 07H data: 0: -° , 1: -12, 2: -9, 3: -6, 4: -4.5, 3rd [1 1/3'] 00 - 07H 5: -3, 6: -1.5: 7: 0[dB] 4th [1 3/5'] 00 - 09H 5th [2'] 00 - 07H 6th [2 2/3'] 00 - 07H 7th [4'] 00 - 07H 8th [5 1/3'] 00 - 07H 9th [8'] 00 - 07H 10th [16'] 00 - 07H 11th [Attack 2'] 00 - 07H 12th [Attack 2 2/3'] 00 - 07H 13th [Attack 4'] 00 - 07H 14th Settings [Attack Length] 00 - 07H 15th [Response] 00 - 07H 16th [Attack Mode] 00 - 01H 00H: Each, 01H: First 17th [Wave Variation] 00 - 01H 00H: Sine, 01H: Tone Wheel 18th [Volume] 00 - 07H 19th [aux 4] 00H 20th [aux 5] 00H 21th [aux 6] 00H 22th [aux 7] 00H sum Check Sum = 0-sum(BULK DATA)	o
DOC Multi Timbre OFF DOC Multi Timbre ON	F0H 43H 73H 01H 13H F7H F0H 43H 73H 01H 14H F7H 00010011 13 = DOC Multi Timbre OFF Substatus 00010100 14 = DOC Multi Timbre ON Substatus When the DOC Multi Timbre ON is accepted, the MIDI receive mode is set as listed below : Channel No Part 1~10 Manual Part (Melody Part) 15 Rhythm 16 Control (Including the System Exclusive messages,)	o
MIDI FA Cancel	F0H 43H 73H 01H 61H F7H 01100001 61 = MIDI FA Cancel Substatus	x
MIDI FA Cancel Off	F0H 43H 73H 01H 62H F7H 01100010 62 = MIDI FA Cancel Off Substatus	x

System Exclusive Messages Special Operators

MIDI Event	Data Format	Recognized
Volume & Expression & Pan Realtime control off (Voice Reserve)	F0H 43H 73H 01H 11H 0nH 45H dd F7H 0000nnnn 0n = Channel No.(00H~0FH) 01000101 45 = Volume & Expression Control No. 0ddddddd dd = Value (Available only for the specified channel) 00H : Realtime On 7FH : Realtime Off	o

System Exclusive Messages Special Operators (Vocal Harmony Additional Parameters)

MIDI Event	Data Format	Recognized
Vocal Harmony Pitch to Note ON/OFF	F0H 43H 73H 01H 11H 00H 50H 00H ss F7H 00000000 00 = Channel No.(always 00) 01010000 50 = Vocal Harmony Additional Parameter Control No. 00000000 00 = Pitch to Note Parameter No. 0sssssss ss = Pitch To Note Switch 00H: Off 01H: On	o
Vocal Harmony Pitch to Note Part	F0H 43H 73H 01H 11H 00H 50H 01H ss F7H 00000000 00 = Channel No.(always 00) 01010000 50 = Vocal Harmony Additional Parameter Control No. 00000001 01 = Pitch to Note Part Parameter No. 0sssssss ss = Pitch To Note Part No. 00H: RIGHT1 01H: RIGHT2 02H: LEFT 03H: LEAD 04H: UPPER	o
Vocal Harmony Vocoder Part (Harmony Part(Panel))	F0H 43H 73H 01H 11H 00H 50H 10H ss F7H 00000000 00 = Channel No.(always 00) 01010000 50 = Vocal Harmony Additional Parameter Control No. 00010000 10 = Vocoder Part Parameter No. 0sssssss ss = Harmony Part No. 00H: Off 01H: Upper 02H: Lower	o
Vocal Harmony Additional Reverb Depth	F0H 43H 73H 01H 11H 00H 50H 11H ss F7H 00000000 00 = Channel No.(always 00) 01010000 50 = Vocal Harmony Additional Parameter Control No. 00010001 11 = Voval Harmony Additional Reverb Depth Parameter No. 0sssssss ss = Value(0...7FH)	x
Vocal Harmony Additional Chorus Depth	F0H 43H 73H 01H 11H 00H 50H 12H ss F7H 00000000 00 = Channel No.(always 00) 01010000 50 = Vocal Harmony Additional Parameter Control No. 00010010 12 = Voval Harmony Additional Chorus Depth Parameter No. 0sssssss ss = Value(0...7FH)	x
Vocal Harmony Panel Variation LED On/Off	F0H 43H 73H 01H 11H 00H 50H 13H ss F7H 00000000 00 = Channel No.(always 00) 01010000 50 = Vocal Harmony Additional Parameter Control No. 00010011 13 = Voval Harmony Panel Variation LED On/Off Parameter No. 0sssssss ss = Switch On/Off 00H: Variation LED Off 7FH: Variotion LED On	x

System Exclusive Messages (the other)

MIDI Event	Data Format	Recognized
MIDI Master Tuning	F0H 43H 1nH 27H 30H 00H 00H mm ll cc F7H 11110000 F0 = Exclusive status 01000011 43 = YAMAHA 0001nnnn 1n n= always 0(when transmit), n=0-F(when receive) 00100111 27 00110000 30 = sub ID 00000000 00 00000000 00 0mmmmmmm mm = Master Tune MSB 0lllllll ll = Master Tune LSB 0ccccccc cc ignored 11110111 F7 = End of Exclusive	o
MWCAT parameter flag	F0H 43H 73H 01H 11H 0nH 54H dd F7H 0000nnnn 0n = Sequencer Track No. 01010100 54 = MWCAT parameter flag 0ddddddd dd = Value (ignored)	o

MIDI Parameter Change Table

<Table 3-1> MIDI PARAMETER CHANGE TABLE (SYSTEM)

Address (H)	Size (H)	Data (H)	Parameter	Recognized	Description	Default value(H)
0 0 0 1 2 3	4	0000 - 07FF	MASTER TUNE	o	-102.4 - +102.3[cent] 1st bit3-0→bit15-12 2nd bit3-0→bit11-8 3rd bit3-0→bit7-4 4th bit3-0→bit3-0	00 04 00 00
4	1	00 - 7F	MASTER VOLUME	o	0 - 127	7F
5	1		(MASTER ATTENUATOR)	x	—	
6	1	28 - 58	TRANSPOSE	o	-24 - +24[semitones]	40
7D		n	DRUM SETUP RESET	o	n=Drum setup number	
7E		0	XG SYSTEM ON	o	00=XG sytem ON	
7F		0	ALL PARAMETER RESET	o	00=ON	

TOTAL SIZE 7

<Table 3-2> MIDI PARAMETER CHANGE TABLE (System information)

Address (H)	Size (H)	Data (H)	Parameter	Recognized	Description	Default
1 0 0 : 0D	E	20 - 7F 20 - 7F	Model Name	x	32-127(ASCII)	
0E	1	0				0
0F	1	0				0

TOTAL SIZE 10

Transmitted by Dump Request. Not Received.

<Table 3-3> MIDI PARAMETER CHANGE TABLE (EFFECT 1)

Address (H)	Size (H)	Data (H)	Parameter	Recognized	Description	Default
2 1 0	2	00-7F	REVERB TYPE MSB	o	Refer to the MIDI EFFECT MAP	01(=HALL1)
		00-7F	REVERB TYPE LSB		00 : basic type	00
2	1	00-7F	REVERB PARAMETER 1	o	Refer to the MIDI EFFECT PARAMETER LIST	depends on reverb type
3	1	00-7F	REVERB PARAMETER 2	o	Refer to the MIDI EFFECT PARAMETER LIST	depends on reverb type
4	1	00-7F	REVERB PARAMETER 3	o	Refer to the MIDI EFFECT PARAMETER LIST	depends on reverb type
5	1	00-7F	REVERB PARAMETER 4	o	Refer to the MIDI EFFECT PARAMETER LIST	depends on reverb type
6	1	00-7F	REVERB PARAMETER 5	o	Refer to the MIDI EFFECT PARAMETER LIST	depends on reverb type
7	1	00-7F	REVERB PARAMETER 6	o	Refer to the MIDI EFFECT PARAMETER LIST	depends on reverb type
8	1	00-7F	REVERB PARAMETER 7	o	Refer to the MIDI EFFECT PARAMETER LIST	depends on reverb type
9	1	00-7F	REVERB PARAMETER 8	o	Refer to the MIDI EFFECT PARAMETER LIST	depends on reverb type
0A	1	00-7F	REVERB PARAMETER 9	o	Refer to the MIDI EFFECT PARAMETER LIST	depends on reverb type
0B	1	00-7F	REVERB PARAMETER 10	o	Refer to the MIDI EFFECT PARAMETER LIST	depends on reverb type
0C	1	00-7F	REVERB RETURN	o	-∞dB...0dB...+6dB(0...64...127)	40
0D	1	01-7F	REVERB PAN	o	L63...C...R63(1...64...127)	40

TOTAL SIZE 0E

2	1	10	1	00-7F	REVERB PARAMETER 11	o	Refer to the MIDI EFFECT PARAMETER LIST	depends on reverb type
		11	1	00-7F	REVERB PARAMETER 12	o	Refer to the MIDI EFFECT PARAMETER LIST	depends on reverb type
		12	1	00-7F	REVERB PARAMETER 13	o	Refer to the MIDI EFFECT PARAMETER LIST	depends on reverb type
		13	1	00-7F	REVERB PARAMETER 14	o	Refer to the MIDI EFFECT PARAMETER LIST	depends on reverb type
		14	1	00-7F	REVERB PARAMETER 15	o	Refer to the MIDI EFFECT PARAMETER LIST	depends on reverb type
		15	1	00-7F	REVERB PARAMETER 16	o	Refer to the MIDI EFFECT PARAMETER LIST	depends on reverb type

TOTAL SIZE 6

2	1	20	2	00-7F	CHORUS TYPE MSB	o	Refer to the MIDI EFFECT MAP	41(=CHORUS1)
				00-7F	CHORUS TYPE LSB		00 : basic type	00
		22	1	00-7F	CHORUS PARAMETER 1	o	Refer to the MIDI EFFECT PARAMETER LIST	depends on chorus Type
		23	1	00-7F	CHORUS PARAMETER 2	o	Refer to the MIDI EFFECT PARAMETER LIST	depends on chorus Type
		24	1	00-7F	CHORUS PARAMETER 3	o	Refer to the MIDI EFFECT PARAMETER LIST	depends on chorus Type
		25	1	00-7F	CHORUS PARAMETER 4	o	Refer to the MIDI EFFECT PARAMETER LIST	depends on chorus Type
		26	1	00-7F	CHORUS PARAMETER 5	o	Refer to the MIDI EFFECT PARAMETER LIST	depends on chorus Type
		27	1	00-7F	CHORUS PARAMETER 6	o	Refer to the MIDI EFFECT PARAMETER LIST	depends on chorus Type
		28	1	00-7F	CHORUS PARAMETER 7	o	Refer to the MIDI EFFECT PARAMETER LIST	depends on chorus Type
		29	1	00-7F	CHORUS PARAMETER 8	o	Refer to the MIDI EFFECT PARAMETER LIST	depends on chorus Type
		2A	1	00-7F	CHORUS PARAMETER 9	o	Refer to the MIDI EFFECT PARAMETER LIST	depends on chorus Type
		2B	1	00-7F	CHORUS PARAMETER 10	o	Refer to the MIDI EFFECT PARAMETER LIST	depends on chorus Type
		2C	1	00-7F	CHORUS RETURN	o	-∞dB...0dB...+6dB(0...64...127)	40
		2D	1	01-7F	CHORUS PAN	o	L63...C...R63(1...64...127)	40
		2E	1	00-7F	SEND CHORUS TO REVERB	o	-∞dB...0dB...+6dB(0...64...127)	00

TOTAL SIZE 0F

2	1	30	1	00-7F	CHORUS PARAMETER 11	o	Refer to the MIDI EFFECT PARAMETER LIST	depends on chorus Type
		31	1	00-7F	CHORUS PARAMETER 12	o	Refer to the MIDI EFFECT PARAMETER LIST	depends on chorus Type
		32	1	00-7F	CHORUS PARAMETER 13	o	Refer to the MIDI EFFECT PARAMETER LIST	depends on chorus Type
		33	1	00-7F	CHORUS PARAMETER 14	o	Refer to the MIDI EFFECT PARAMETER LIST	depends on chorus Type
		34	1	00-7F	CHORUS PARAMETER 15	o	Refer to the MIDI EFFECT PARAMETER LIST	depends on chorus Type
		35	1	00-7F	CHORUS PARAMETER 16	o	Refer to the MIDI EFFECT PARAMETER LIST	depends on chorus Type

TOTAL SIZE 6

2	1	40	2	00-7F	VARIATION TYPE MSB	o	Refer to the MIDI EFFECT MAP	05(=DELAY L,C,R)
				00-7F	VARIATION TYPE LSB		00 : basic type	00
		42	2	00-7F	VARIATION PARAMETER 1 MSB	o	Refer to the MIDI EFFECT PARAMETER LIST	depends on variation type
				00-7F	VARIATION PARAMETER 1 LSB		Refer to the MIDI EFFECT PARAMETER LIST	depends on variation type
		44	2	00-7F	VARIATION PARAMETER 2 MSB	o	Refer to the MIDI EFFECT PARAMETER LIST	depends on variation type
				00-7F	VARIATION PARAMETER 2 LSB		Refer to the MIDI EFFECT PARAMETER LIST	depends on variation type
		46	2	00-7F	VARIATION PARAMETER 3 MSB	o	Refer to the MIDI EFFECT PARAMETER LIST	depends on variation type
				00-7F	VARIATION PARAMETER 3 LSB		Refer to the MIDI EFFECT PARAMETER LIST	depends on variation type
		48	2	00-7F	VARIATION PARAMETER 4 MSB	o	Refer to the MIDI EFFECT PARAMETER LIST	depends on variation type
				00-7F	VARIATION PARAMETER 4 LSB		Refer to the MIDI EFFECT PARAMETER LIST	depends on variation type
		4A	2	00-7F	VARIATION PARAMETER 5 MSB	o	Refer to the MIDI EFFECT PARAMETER LIST	depends on variation type
				00-7F	VARIATION PARAMETER 5 LSB		Refer to the MIDI EFFECT PARAMETER LIST	depends on variation type
		4C	2	00-7F	VARIATION PARAMETER 6 MSB	o	Refer to the MIDI EFFECT PARAMETER LIST	depends on variation type
				00-7F	VARIATION PARAMETER 6 LSB		Refer to the MIDI EFFECT PARAMETER LIST	depends on variation type
		4E	2	00-7F	VARIATION PARAMETER 7 MSB	o	Refer to the MIDI EFFECT PARAMETER LIST	depends on variation type
				00-7F	VARIATION PARAMETER 7 LSB		Refer to the MIDI EFFECT PARAMETER LIST	depends on variation type
		50	2	00-7F	VARIATION PARAMETER 8 MSB	o	Refer to the MIDI EFFECT PARAMETER LIST	depends on variation type
				00-7F	VARIATION PARAMETER 8 LSB		Refer to the MIDI EFFECT PARAMETER LIST	depends on variation type
		52	2	00-7F	VARIATION PARAMETER 9 MSB	o	Refer to the MIDI EFFECT PARAMETER LIST	depends on variation type
				00-7F	VARIATION PARAMETER 9 LSB		Refer to the MIDI EFFECT PARAMETER LIST	depends on variation type
		54	2	00-7F	VARIATION PARAMETER 10 MSB	o	Refer to the MIDI EFFECT PARAMETER LIST	depends on variation type
				00-7F	VARIATION PARAMETER 10 LSB		Refer to the MIDI EFFECT PARAMETER LIST	depends on variation type
		56	1	00-7F	VARIATION RETURN	o	-∞dB...0dB...+6dB(0...64...127)	40
		57	1	01-7F	VARIATION PAN	o	L63...C...R63(1...64...127)	40
		58	1	00-7F	SEND VARIATION TO REVERB	o	-∞dB...0dB...+6dB(0...64...127)	00
		59	1	00-7F	SEND VARIATION TO CHORUS	o	-∞dB...0dB...+6dB(0...64...127)	00
		5A	1	00-01	VARIATION CONNECTION	o	0:INSERTION,1:SYSTEM	00
		5B	1	00-7F	VARIATION PART	o	Part1...16(0...15) AD1(64) OFF(16...63, 65...127)	7F
		5C	1		MW VARIATION CONTROL DEPTH	o	-64 - +63	40
		5D	1		BEND VARIATION CONTROL DEPTH	o	-64 - +63	40
		5E	1		CAT VARIATION CONTROL DEPTH	o	-64 - +63	40
		5F	1		AC1 VARIATION CONTROL DEPTH	x	-64 - +63	40
		60	1		AC2 VARIATION CONTROL DEPTH	x	-64 - +63	40
TOTAL SIZE			21					

2	1	70	1	00-7F	VARIATION PARAMETER 11	o	Refer to the MIDI EFFECT PARAMETER LIST	depends on variation type
		71	1	00-7F	VARIATION PARAMETER 12	o	Refer to the MIDI EFFECT PARAMETER LIST	depends on variation type
		72	1	00-7F	VARIATION PARAMETER 13	o	Refer to the MIDI EFFECT PARAMETER LIST	depends on variation type
		73	1	00-7F	VARIATION PARAMETER 14	o	Refer to the MIDI EFFECT PARAMETER LIST	depends on variation type
		74	1	00-7F	VARIATION PARAMETER 15	o	Refer to the MIDI EFFECT PARAMETER LIST	depends on variation type
		75	1	00-7F	VARIATION PARAMETER 16	o	Refer to the MIDI EFFECT PARAMETER LIST	depends on variation type
TOTAL SIZE			6					

<Table 3-4> MIDI PARAMETER CHANGE TABLE (MASTER EQ)

Address (H)			Size (H)	Data (H)	Parameter	Recognized	Description	Default value(H)
2	40	0	1	00 - 04	EQ type	o	0:FLAT 1:JAZZ 2:POPS 3:ROCK 4:CLASSIC	0
		1	1	34 -4C	EQ gain1	o	-12 - +12[dB]	40
		2	1	04-28	EQ frequency1	o	32-2000[Hz]	0C
		3	1	01-78	EQ Q1	o	0.1-12.0	7
		4	1	00-01	EQ shape1	o	00:shelving, 01:peaking	0
		5	1	34 -4C	EQ gain2	o	-12 - +12[dB]	40
		6	1	0E-36	EQ frequency2	o	100-10.0[kHz]	1C
		7	1	01-78	EQ Q2	o	0.1-12.0	7
		8	1		not used	x		
		9	1	34 -4C	EQ gain3	o	-12 - +12[dB]	40
		0A	1	0E-36	EQ frequency3	o	100-10.0[kHz]	22
		0B	1	01-78	EQ Q3	o	0.1-12.0	7
		0C	1		not used	x		
		0D	1	34 -4C	EQ gain4	o	-12 - +12[dB]	40
		0E	1	0E-36	EQ frequency4	o	100-10.0[kHz]	2E
		0F	1	01-78	EQ Q4	o	0.1-12.0	7
		10	1		not used	x		
		11	1	34 -4C	EQ gain5	o	-12 - +12[dB]	40
		12	1	1C-3A	EQ frequency5	o	0.5-16.0[kHz]	34
		13	1	01-78	EQ Q5	o	0.1-12.0	7
		14	1	00-01	EQ shape5	o	00:shelving, 01:peaking	0
TOTAL SIZE			15					

<Table 3-5> MIDI PARAMETER CHANGE TABLE (EFFECT 2)

Address (H)			Size (H)	Data (H)	Parameter	Recognized	Description	Default
3	0n	0	2	00-7F	INSERTION EFFECT n TYPE MSB	o	Refer to the MIDI EFFECT MAP	49(=DISTORTION)
				00-7F	INSERTION EFFECT n TYPE LSB		00 : basic type	00
		2	1	00-7F	INSERTION EFFECT n PARAMETER1	o	Refer to the MIDI EFFECT PARAMETER LIST	depends on insertion 1 type
		3	1	00-7F	INSERTION EFFECT n PARAMETER2	o	Refer to the MIDI EFFECT PARAMETER LIST	depends on insertion 1 type
		4	1	00-7F	INSERTION EFFECT n PARAMETER3	o	Refer to the MIDI EFFECT PARAMETER LIST	depends on insertion 1 type
		5	1	00-7F	INSERTION EFFECT n PARAMETER4	o	Refer to the MIDI EFFECT PARAMETER LIST	depends on insertion 1 type

6	1	00-7F	INSERTION EFFECT n PARAMETER5	o	Refer to the MIDI EFFECT PARAMETER LIST	depends on insertion 1 type
7	1	00-7F	INSERTION EFFECT n PARAMETER6	o	Refer to the MIDI EFFECT PARAMETER LIST	depends on insertion 1 type
8	1	00-7F	INSERTION EFFECT n PARAMETER7	o	Refer to the MIDI EFFECT PARAMETER LIST	depends on insertion 1 type
9	1	00-7F	INSERTION EFFECT n PARAMETER8	o	Refer to the MIDI EFFECT PARAMETER LIST	depends on insertion 1 type
0A	1	00-7F	INSERTION EFFECT n PARAMETER9	o	Refer to the MIDI EFFECT PARAMETER LIST	depends on insertion 1 type
0B	1	00-7F	INSERTION EFFECT n PARAMETER10	o	Refer to the MIDI EFFECT PARAMETER LIST	depends on insertion 1 type
0C	1	00-7F	INSERTION EFFECT n PART	o	Part1...16(0...15) AD1(64) OFF(16...63, 65...127)	7F
0D	1	00-7F	MW INSERTION CONTROL DEPTH	o	-64 - 63	40
0E	1	00-7F	BEND INSERTION CONTROL DEPTH	o	-64 - 63	40
0F	1	00-7F	CAT INSERTION CONTROL DEPTH	o	-64 - 63	40
10	1	00-7F	AC1 INSERTION CONTROL DEPTH	x	-64 - 63	40
11	1	00-7F	AC2 INSERTION CONTROL DEPTH	x	-64 - 63	40

TOTAL SIZE 12

20	1	00-7F	INSERTION EFFECT n PARAMETER11	o	Refer to the MIDI EFFECT PARAMETER LIST	depends on insertion 1 type
21	1	00-7F	INSERTION EFFECT n PARAMETER12	o	Refer to the MIDI EFFECT PARAMETER LIST	depends on insertion 1 type
22	1	00-7F	INSERTION EFFECT n PARAMETER13	o	Refer to the MIDI EFFECT PARAMETER LIST	depends on insertion 1 type
23	1	00-7F	INSERTION EFFECT n PARAMETER14	o	Refer to the MIDI EFFECT PARAMETER LIST	depends on insertion 1 type
24	1	00-7F	INSERTION EFFECT n PARAMETER15	o	Refer to the MIDI EFFECT PARAMETER LIST	depends on insertion 1 type
25	1	00-7F	INSERTION EFFECT n PARAMETER16	o	Refer to the MIDI EFFECT PARAMETER LIST	depends on insertion 1 type

TOTAL SIZE 6

30	2	00 - 7F	INSERTION EFFECT n PARAMETER1 MSB	o	Refer to the XG EFFECT PARAMETER LIST	depends on insertion 1 type
		00 - 7F	INSERTION EFFECT n PARAMETER1 LSB	o	Refer to the XG EFFECT PARAMETER LIST	depends on insertion 1 type
32	2	00 - 7F	INSERTION EFFECT n PARAMETER2 MSB	o	Refer to the XG EFFECT PARAMETER LIST	depends on insertion 1 type
		00 - 7F	INSERTION EFFECT n PARAMETER2 LSB	o	Refer to the XG EFFECT PARAMETER LIST	depends on insertion 1 type
34	2	00 - 7F	INSERTION EFFECT n PARAMETER3 MSB	o	Refer to the XG EFFECT PARAMETER LIST	depends on insertion 1 type
		00 - 7F	INSERTION EFFECT n PARAMETER3 LSB	o	Refer to the XG EFFECT PARAMETER LIST	depends on insertion 1 type
36	2	00 - 7F	INSERTION EFFECT n PARAMETER4 MSB	o	Refer to the XG EFFECT PARAMETER LIST	depends on insertion 1 type
		00 - 7F	INSERTION EFFECT n PARAMETER4 LSB	o	Refer to the XG EFFECT PARAMETER LIST	depends on insertion 1 type
38	2	00 - 7F	INSERTION EFFECT n PARAMETER5 MSB	o	Refer to the XG EFFECT PARAMETER LIST	depends on insertion 1 type
		00 - 7F	INSERTION EFFECT n PARAMETER5 LSB	o	Refer to the XG EFFECT PARAMETER LIST	depends on insertion 1 type
3A	2	00 - 7F	INSERTION EFFECT n PARAMETER6 MSB	o	Refer to the XG EFFECT PARAMETER LIST	depends on insertion 1 type
		00 - 7F	INSERTION EFFECT n PARAMETER6 LSB	o	Refer to the XG EFFECT PARAMETER LIST	depends on insertion 1 type
3C	2	00 - 7F	INSERTION EFFECT n PARAMETER7 MSB	o	Refer to the XG EFFECT PARAMETER LIST	depends on insertion 1 type
		00 - 7F	INSERTION EFFECT n PARAMETER7 LSB	o	Refer to the XG EFFECT PARAMETER LIST	depends on insertion 1 type
3E	2	00 - 7F	INSERTION EFFECT n PARAMETER8 MSB	o	Refer to the XG EFFECT PARAMETER LIST	depends on insertion 1 type
		00 - 7F	INSERTION EFFECT n PARAMETER8 LSB	o	Refer to the XG EFFECT PARAMETER LIST	depends on insertion 1 type
40	2	00 - 7F	INSERTION EFFECT n PARAMETER9 MSB	o	Refer to the XG EFFECT PARAMETER LIST	depends on insertion 1 type
		00 - 7F	INSERTION EFFECT n PARAMETER9 LSB	o	Refer to the XG EFFECT PARAMETER LIST	depends on insertion 1 type
42	2	00 - 7F	INSERTION EFFECT n PARAMETER10 MSB	o	Refer to the XG EFFECT PARAMETER LIST	depends on insertion 1 type
		00 - 7F	INSERTION EFFECT n PARAMETER10 LSB	o	Refer to the XG EFFECT PARAMETER LIST	depends on insertion 1 type

TOTAL SIZE 14

0n: insertion effect number

Note : For effect types that do not require MSB, the Parameters for Address 02-0B will be received and the Parameters for Address 30-42 will not be received.
For effect types that require MSB, the Parameters for Address 30-42 will be received and the Parameters for Address 02-0B will not be received.
When Bulk Dumps that include Effect Type data are transmitted, the Parameters for Address 02 - 0B will always be transmitted. But, effects that require MSB, when the bulk dump is received the Parameters for Address 02 - 0B will not be received.
The following four effect types require MSB:
DelayLCR, DelayLR, Echo, CrossDelay, Dist+Delay, Comp+Dist+Delay, Wah+Dist+Delay, VDistortion
*Data Range is different according to the Effect type value.

<Table 3-6> MIDI PARAMETER CHANGE TABLE (SPECIAL EFFECT)

Address (H)	Size (H)	Data (H)	Parameter	Recognized	Description	Default
04 00 00	2	00 - 7F	INSERTION EFFECT TYPE MSB	o	Refer to the XG EFFECT MAP	49(=DISTORTION)
		00 - 7F	INSERTION EFFECT TYPE LSB	o	00 : basic type	00
02	1	00 - 7F	INSERTION EFFECT PARAMETER1	o	Refer to the XG EFFECT PARAMETER LIST	depends on insertion 1 type
03	1	00 - 7F	INSERTION EFFECT PARAMETER2	o	Refer to the XG EFFECT PARAMETER LIST	depends on insertion 1 type
04	1	00 - 7F	INSERTION EFFECT PARAMETER3	o	Refer to the XG EFFECT PARAMETER LIST	depends on insertion 1 type
05	1	00 - 7F	INSERTION EFFECT PARAMETER4	o	Refer to the XG EFFECT PARAMETER LIST	depends on insertion 1 type
06	1	00 - 7F	INSERTION EFFECT PARAMETER5	o	Refer to the XG EFFECT PARAMETER LIST	depends on insertion 1 type
07	1	00 - 7F	INSERTION EFFECT PARAMETER6	o	Refer to the XG EFFECT PARAMETER LIST	depends on insertion 1 type
08	1	00 - 7F	INSERTION EFFECT PARAMETER7	o	Refer to the XG EFFECT PARAMETER LIST	depends on insertion 1 type
09	1	00 - 7F	INSERTION EFFECT PARAMETER8	o	Refer to the XG EFFECT PARAMETER LIST	depends on insertion 1 type
0A	1	00 - 7F	INSERTION EFFECT PARAMETER9	o	Refer to the XG EFFECT PARAMETER LIST	depends on insertion 1 type
0B	1	00 - 7F	INSERTION EFFECT PARAMETER10	o	Refer to the XG EFFECT PARAMETER LIST	depends on insertion 1 type
0C	1	00 - 7F	INSERTION EFFECT PART	x	Part1...16(0...15) AD1(64) OFF(16...63, 65...127)	7F
0D	1	00 - 7F	MW INSERTION CONTROL DEPTH	o	—	40
0E	1	00 - 7F	BEND INSERTION CONTROL DEPTH	o	—	40
0F	1	00 - 7F	CAT INSERTION CONTROL DEPTH	o	—	40
10	1	00 - 7F	AC1 INSERTION CONTROL DEPTH	x	—	40
11	1	00 - 7F	AC2 INSERTION CONTROL DEPTH	x	—	40
TOTAL SIZE	12					

04 00 14	1	00 - 7F	UNIQUE INSERTION EFFECT EXTERNAL CONTROL CH1(HARMONY CHANNEL*)	o	1...16(0...15), off(127)	7F
15	1	00 - 7F	UNIQUE INSERTION EFFECT EXTERNAL CONTROL CH2 (MELODY CHANNEL*)	o	1...16(0...15), off(127)	7F
TOTAL SIZE	2					

04 00 20	1	00 - 7F	INSERTION EFFECT PARAMETER11	o	Refer to the XG EFFECT PARAMETER LIST	depends on insertion 1 type
21	1	00 - 7F	INSERTION EFFECT PARAMETER12	o	Refer to the XG EFFECT PARAMETER LIST	depends on insertion 1 type
22	1	00 - 7F	INSERTION EFFECT PARAMETER13	o	Refer to the XG EFFECT PARAMETER LIST	depends on insertion 1 type
23	1	00 - 7F	INSERTION EFFECT PARAMETER14	o	Refer to the XG EFFECT PARAMETER LIST	depends on insertion 1 type
24	1	00 - 7F	INSERTION EFFECT PARAMETER15	o	Refer to the XG EFFECT PARAMETER LIST	depends on insertion 1 type
25	1	00 - 7F	INSERTION EFFECT PARAMETER16	o	Refer to the XG EFFECT PARAMETER LIST	depends on insertion 1 type
TOTAL SIZE	6					

*HARMONY CHANNEL and MELODY CHANNEL
About these settings, the last message is effective.
When the Melody channel is 3 and a message that set the Harmony Channel to 3 is received, the Melody channel is set to OFF and the Harmony channel is set to 3.

<Table 3-7> MIDI PARAMETER CHANGE TABLE (DISPLAY DATA)

Address	Size (H)	Data (H)	Parameter	Recognized	Description	Default
6 0 0 : 1F	20		(DISPLAY LETTER)	x	—	
TOTAL SIZE	20					

7 vh 0 : 2F	30		(DISPLAY BITMAP Data0) : (Data47)	x	—	
TOTAL SIZE	30					

<Table 3-8> MIDI PARAMETER CHANGE TABLE (MULTI PART)

Address (H)	Size (H)	Data (H)	Parameter	Recognized							Description	Default value(H)
				XG/GM	Keyboard	R1	R2	R3	Left	Acmp		
8 nn 0	1	00 - 20	ELEMENT RESERVE	o	x	x	x	x	x	x	0 - 32	part10=0, other =2
nn 1	1	00 - 7F	BANK SELECT MSB	o	x	o	o	o	o	o	0 - 127	part10=7F, other=0
nn 2	1	00 - 7F	BANK SELECT LSB								0 - 127	0
nn 3	1	00 - 7F	PROGRAM NUMBER	o	x	o	o	o	o	o	1 - 128	0
nn 4	1	00 - 0F, 7F	Rcv CHANNEL	o	x	x	x	x	x	x	1 - 16,OFF	Part No.
nn 5	1	00 - 01	MONO/POLY MODE	o	x	o	o	o	o	x	0:MONO 1:POLY	1

nn 6	1	00 - 02	SAME NOTE NUMBER KEY ON ASSIGN	o	x	o	o	o	o	o	0:SINGLE 1:MULTI 2:INST (for DRUM)	1
nn 7	1	00 - 05	PART MODE	o	x	x	x	x	x	x	0:NORMAL 1:DRUM(ROM) 2 - 3:DRUMS1~ (RAM) 4-5:DRUM(ROM)	00 (Except Part10) 02 (Part10) 04,05 = [L3-80]
nn 8	1	28 - 58	NOTE SHIFT	o	x	o	o	o	o	o	-24 - +24[semitones]	40
nn 9 nn 0A	2	00 - FF	DETUNE	o	x	o	o	o	o	o	-12.8 - +12.7[Hz] 1st bit3-0? bit7-4 2nd bit3-0? bit3-0	08 00 (80)
nn 0B	1	00 - 7F	VOLUME	o	x	o	o	o	o	o	0 - 127	64
nn 0C	1	00 - 7F	VELOCITY SENSE DEPTH	o	x	o	o	o	o	o	0 - 127	40
nn 0D	1	00 - 7F	VELOCITY SENSE OFFSET	o	x	o	o	o	o	o	0 - 127	40
nn 0E	1	00 - 7F	PAN	o	x	o	o	o	o	o	0:random L63...C...R63(1...64...127)	40
nn 0F	1	00 - 7F	NOTE LIMIT LOW	o	x	o	o	o	o	o	C-2 - G8	0
nn 10	1	00 - 7F	NOTE LIMIT HIGH	o	x	o	o	o	o	o	C-2 - G8	7F
nn 11	1	00 - 7F	DRY LEVEL	o	x	o	o	o	o	o	0 - 127	7F
nn 12	1	00 - 7F	CHORUS SEND	o	x	o	o	o	o	o	0 - 127	0
nn 13	1	00 - 7F	REVERB SEND	o	x	o	o	o	o	o	0 - 127	28
nn 14	1	00 - 7F	VARIATION SEND	o	x	o	o	o	o	o	0 - 127	0
nn 15	1	00 - 7F	VIBRATO RATE	o	x	o	o	o	o	o	-64 - +63	40
nn 16	1	00 - 7F	VIBRATO DEPTH	o	x	o	o	o	o	o	-64 - +63	40
nn 17	1	00 - 7F	VIBRATO DELAY	o	x	o	o	o	o	o	-64 - +63	40
nn 18	1	00 - 7F	FILTER CUTOFF FREQUENCY	o	x	o	o	o	o	o	-64 - +63	40
nn 19	1	00 - 7F	FILTER RESONANCE	o	x	o	o	o	o	o	-64 - +63	40
nn 1A	1	00 - 7F	EG ATTACK TIME	o	x	o	o	o	o	o	-64 - +63	40
nn 1B	1	00 - 7F	EG DECAY TIME	o	x	o	o	o	o	o	-64 - +63	40
nn 1C	1	00 - 7F	EG RELEASE TIME	o	x	o	o	o	o	o	-64 - +63	40
nn 1D	1	28 - 58	MW PITCH CONTROL	o	x	o	o	o	o	o	-24 - +24[semitones]	40
nn 1E	1	00 - 7F	MW FILTER CONTROL	o	x	o	o	o	o	o	-9600 - +9450[cent]	40
nn 1F	1	00 - 7F	MW AMPLITUDE CONTROL	o	x	o	o	o	o	o	-100 - +100[%]	40
nn 20	1	00 - 7F	MW LFO PMOD DEPTH	o	x	o	o	o	o	o	0 - 127	0A
nn 21	1	00 - 7F	MW LFO FMOD DEPTH	o	x	o	o	o	o	o	0 - 127	0
nn 22	1	00 - 7F	MW LFO AMOD DEPTH	o	x	o	o	o	o	o	0 - 127	0
nn 23	1	28 - 58	BEND PITCH CONTROL	o	x	o	o	o	o	o	-24 - +24[semitones]	42
nn 24	1	00 - 7F	BEND FILTER CONTROL	o	x	o	o	o	o	o	-9600 - +9450[cent]	40
nn 25	1	00 - 7F	BEND AMPLITUDE CONTROL	o	x	o	o	o	o	o	-100 - +100[%]	40
nn 26	1	00 - 7F	BEND LFO PMOD DEPTH	o	x	o	o	o	o	o	0 - 127	0
nn 27	1	00 - 7F	BEND LFO FMOD DEPTH	o	x	o	o	o	o	o	0 - 127	0
nn 28	1	00 - 7F	BEND LFO AMOD DEPTH	o	x	o	o	o	o	o	0 - 127	0

TOTAL SIZE 29

Address (H)	**Size** (H)	**Data** (H)	**Parameter**	**Recognized**							**Description**	**Default** value(H)
				XG/GM	Keyboard	R1	R2	R3	Left	Acmp		
nn 30	1		(Rcv PITCH BEND)	x	x	x	x	x	x	x	—	
nn 31	1		(Rcv CH AFTER TOUCH(CAT))	x	x	x	x	x	x	x	—	
nn 32	1		(Rcv PROGRAM CHANGE)	x	x	x	x	x	x	x	—	
nn 33	1		(Rcv CONTROL CHANGE)	x	x	x	x	x	x	x	—	
nn 34	1		(Rcv POLY AFTER TOUCH(PAT))	x	x	x	x	x	x	x	—	
nn 35	1		Rcv NOTE MESSAGE	o	x	x	x	x	x	x	OFF, ON	1
nn 36	1		(Rcv RPN)	x	x	x	x	x	x	x	—	
nn 37	1		(Rcv NRPN)	x	x	x	x	x	x	x	—	
nn 38	1		(Rcv MODULATION)	x	x	x	x	x	x	x	—	
nn 39	1		(Rcv VOLUME)	x	x	x	x	x	x	x	—	
nn 3A	1		(Rcv PAN)	x	x	x	x	x	x	x	—	
nn 3B	1		(Rcv EXPRESSION)	x	x	x	x	x	x	x	—	
nn 3C	1		(Rcv HOLD1)	x	x	x	x	x	x	x	—	
nn 3D	1		(Rcv PORTAMENTO)	x	x	x	x	x	x	x	—	
nn 3E	1		(Rcv SOSTENUTO)	x	x	x	x	x	x	x	—	
nn 3F	1		(Rcv SOFT PEDAL)	x	x	x	x	x	x	x	—	
nn 40	1		(Rcv BANK SELECT)	x	x	x	x	x	x	x	—	
nn 41	1	00 - 7F	SCALE TUNING C	o	x	o	o	o	o	o	-64 - +63[cent]	40
nn 42	1	00 - 7F	SCALE TUNING C#	o	x	o	o	o	o	o	-64 - +63[cent]	40
nn 43	1	00 - 7F	SCALE TUNING D	o	x	o	o	o	o	o	-64 - +63[cent]	40
nn 44	1	00 - 7F	SCALE TUNING D#	o	x	o	o	o	o	o	-64 - +63[cent]	40
nn 45	1	00 - 7F	SCALE TUNING E	o	x	o	o	o	o	o	-64 - +63[cent]	40
nn 46	1	00 - 7F	SCALE TUNING F	o	x	o	o	o	o	o	-64 - +63[cent]	40
nn 47	1	00 - 7F	SCALE TUNING F#	o	x	o	o	o	o	o	-64 - +63[cent]	40
nn 48	1	00 - 7F	SCALE TUNING G	o	x	o	o	o	o	o	-64 - +63[cent]	40
nn 49	1	00 - 7F	SCALE TUNING G#	o	x	o	o	o	o	o	-64 - +63[cent]	40
nn 4A	1	00 - 7F	SCALE TUNING A	o	x	o	o	o	o	o	-64 - +63[cent]	40
nn 4B	1	00 - 7F	SCALE TUNING A#	o	x	o	o	o	o	o	-64 - +63[cent]	40
nn 4C	1	00 - 7F	SCALE TUNING B	o	x	o	o	o	o	o	-64 - +63[cent]	40

nn	4D	1		CAT PITCH CONTROL	o	x	o	o	o	o	x	-24 - +24[semitones]	40
nn	4E	1		CAT FILTER CONTROL	o	x	o	o	o	o	x	-9600 - +9450[cent]	40
nn	4F	1		CAT AMPLITUDE CONTROL	o	x	o	o	o	o	x	-100 - +100[%]	40
nn	50	1		CAT LFO PMOD DEPTH	o	x	o	o	o	o	x	0 - 127	0
nn	51	1		CAT LFO FMOD DEPTH	o	x	o	o	o	o	x	0 - 127	0
nn	52	1		CAT LFO AMOD DEPTH	o	x	o	o	o	o	x	0 - 127	0
nn	53	1		PAT PITCH CONTROL	x	x	x	x	x	x	x	—	40
nn	54	1		PAT FILTER CONTROL	x	x	x	x	x	x	x	—	40
nn	55	1		PAT AMPLITUDE CONTROL	x	x	x	x	x	x	x	—	40
nn	56	1		PAT LFO PMOD DEPTH	x	x	x	x	x	x	x	—	0
nn	57	1		PAT LFO FMOD DEPTH	x	x	x	x	x	x	x	—	0
nn	58	1		PAT LFO AMOD DEPTH	x	x	x	x	x	x	x	—	0
nn	59	1		AC1 CONTROLLER NUMBER	x	x	x	x	x	x	x	—	10
nn	5A	1		AC1 PITCH CONTROL	x	x	x	x	x	x	x	—	40
nn	5B	1		AC1 FILTER CONTROL	x	x	x	x	x	x	x	—	40
nn	5C	1		AC1 AMPLITUDE CONTROL	x	x	x	x	x	x	x	—	40
nn	5D	1		AC1 LFO PMOD DEPTH	x	x	x	x	x	x	x	—	0
nn	5E	1		AC1 LFO FMOD DEPTH	x	x	x	x	x	x	x	—	0
nn	5F	1		AC1 LFO AMOD DEPTH	x	x	x	x	x	x	x	—	0
nn	60	1		AC2 CONTROLLER NUMBER	x	x	x	x	x	x	x	—	11
nn	61	1		AC2 PITCH CONTROL	x	x	x	x	x	x	x	—	40
nn	62	1		AC2 FILTER CONTROL	x	x	x	x	x	x	x	—	40
nn	63	1		AC2 AMPLITUDE CONTROL	x	x	x	x	x	x	x	—	40
nn	64	1		AC2 LFO PMOD DEPTH	x	x	x	x	x	x	x	—	0
nn	65	1		AC2 LFO FMOD DEPTH	x	x	x	x	x	x	x	—	0
nn	66	1		AC2 LFO AMOD DEPTH	x	x	x	x	x	x	x	—	0
nn	67	1		PORTAMENTO SWITCH	o	x	o	o	o	o	x	OFF/ON	0
nn	68	1		PORTAMENTO TIME	o	x	o	o	o	o	x	0 - 127	0
nn	69	1		PITCH EG INITIAL LEVEL	x	x	x	x	x	x	x	—	40
nn	6A	1		PITCH EG ATTACK TIME	x	x	x	x	x	x	x	—	40
nn	6B	1		PITCH EG RELEASE LEVEL	x	x	x	x	x	x	x	—	40
nn	6C	1		PITCH EG RELEASE TIME	x	x	x	x	x	x	x	—	40
nn	6D	1		VELOCITY LIMIT LOW	x	x	x	x	x	x	x	—	1
nn	6E	1		VELOCITY LIMIT HIGH	x	x	x	x	x	x	x	—	7F
TOTAL SIZE		3F											

<Table 3-8-2>

Address (H)			Size (H)	Data (H)	Parameter	Recognized							Description	Default value(H)
						XG/GM	Keyboard	R1	R2	R3	Left	Acmp		
08	nn	70	1		NOT USED	x	x	x	x	x	x	x	—	3E
	nn	71	1		NOT USED	x	x	x	x	x	x	x	—	40
	nn	72	1	00 - 7F	EQ BASS	o	x	o	o	o	o	o	-64 - +63(-12 - +12[dB])	40
	nn	73	1	00 - 7F	EQ TREBLE	o	x	o	o	o	o	o	-64 - +63(-12 - +12[dB])	40
TOTAL SIZE			04											

<Table 3-8-3> XG ADDITIONAL PARAMETER CHANGE TABLE (MULTI PART)

Address (H)			Size (H)	Data (H)	Parameter	Recognized							Description	Default value(H)
						XG/GM	Keyboard	R1	R2	R3	Left	Acmp		
08	nn	74	1		NOT USED	x	x	x	x	x	x	x	—	40
		75	1		NOT USED	x	x	x	x	x	x	x	—	40
		76	1	04 - 28	EQ BASS frequency	o	x	o	o	o	o	o	32-2.0k[Hz]	0C
		77	1	1C - 3A	EQ TREBLE frequency	o	x	o	o	o	o	o	500-16.0k[Hz]	36
		78	1		NOT USED	x	x	x	x	x	x	x	—	22
		79	1		NOT USED	x	x	x	x	x	x	x	—	2E
		7A	1		NOT USED	x	x	x	x	x	x	x	—	7
		7B	1		NOT USED	x	x	x	x	x	x	x	—	7
		7C	1		NOT USED	x	x	x	x	x	x	x	—	7
		7D	1		NOT USED	x	x	x	x	x	x	x	—	7
		7E	1		NOT USED	x	x	x	x	x	x	x	—	0
		7F	1		NOT USED	x	x	x	x	x	x	x	—	0
TOTAL SIZE			0C											

0A	nn	10	1	00,08, 28-2D	OUTPUT SELECT	x	x	x	x	x	x	x	0:stereo out,8:indiv1+2 40:indiv1,41:indiv2,	0
TOTAL SIZE			1											

nn: PartNumber

If there is a Drum Voice assigned to the Part, the following parameters are ineffective.

- BANK SELECT LSB
- PORTAMENTO
- SOFT PEDAL
- MONO/POLY
- SCALE TUNING
- POLY AFTER TOUCH
- PITCH EG

<Table 3-9> MIDI PARAMETER CHANGE TABLE (A/D PART)

Address (H)	Size (H)	Data (H)	Parameter	Recognized	Description	Default value(H)
10 nn 0	1	00 - 01	INPUT GAIN	x	0:MIC,1:LINE	0
1	1	00 - 7F	BANK SELECT MSB	x	0 - 127	0
2	1	00 - 7F	BANK SELECT LSB	x	0 - 127	0
3	1	00 - 7F	PROGRAM NUMBER	x	1 - 128	0
4	1	00 - 1F, 7F	Rcv CHANNEL	o	A1 - A16,B1 - B16,OFF	7F
5	1		NOT USED			
6	1		NOT USED			
7	1		NOT USED			
8	1		NOT USED			
9	1		NOT USED			
0A	1		NOT USED			
0B	1	00 - 7F	VOLUME	o	0 - 127	0
0C	1		NOT USED			
0D	1		NOT USED			
0E	1	01 - 7F	PAN	o	L63...C...R63(1...64...127)	40
0F	1		NOT USED			
10	1		NOT USED			
11	1	00 - 7F	DRY LEVEL	o	0 - 127	7F
12	1	00 - 7F	CHORUS SEND	o	0 - 127	0
13	1	00 - 7F	REVERB SEND	o	0 - 127	0
14	1	00 - 7F	VARIATION SEND	o	0 - 127	0
TOTAL SIZE	15					

Address (H)	Size (H)	Data (H)	Parameter	Recognized	Description	Default value(H)
10 nn 30	1		NOT USED			
31	1		NOT USED			
32	1	00 - 01	Rcv PROGRAM CHANGE	x	—	1
33	1	00 - 01	Rcv CONTROL CHANGE	x	—	1
34	1		NOT USED			
35	1		NOT USED			
36	1		NOT USED			
37	1		NOT USED			
38	1		NOT USED			
39	1	00 - 01	Rcv VOLUME	x	—	1
3A	1	00 - 01	Rcv PAN	x	—	1
3B	1	00 - 01	Rcv EXPRESSION	x	—	1
3C	1		NOT USED			
3D	1		NOT USED			
3E	1		NOT USED			
3F	1		NOT USED			
40	1	00 - 01	Rcv BANK SELECT	x	—	1
41	1		NOT USED			
42	1		NOT USED			
43	1		NOT USED			
44	1		NOT USED			
45	1		NOT USED			
46	1		NOT USED			
47	1		NOT USED			
48	1		NOT USED			
49	1		NOT USED			
4A	1		NOT USED			
4B	1		NOT USED			
4C	1		NOT USED			
4D	1		NOT USED			
4E	1		NOT USED			
4F	1		NOT USED			
50	1		NOT USED			
51	1		NOT USED			
52	1		NOT USED			
53	1		NOT USED			
54	1		NOT USED			
55	1		NOT USED			
56	1		NOT USED			
57	1		NOT USED			
58	1		NOT USED			
59	1	00 - 5F	AC1 CONTROLLER NUMBER	x	—	10
5A	1		NOT USED			
5B	1		NOT USED			
5C	1		NOT USED			
5D	1		NOT USED			
5E	1		NOT USED			
5F	1		NOT USED			
60	1	00 - 5F	AC2 CONTROLLER NUMBER	x	—	11
TOTAL SIZE	31					

Functions of the MIDI B Port when Connected to the MFC10

The MIDI B port can also be used for operation with the MFC10 MIDI Foot Controller.

<Table 1> MIDI B IN

MIDI Events	Status byte		1st Data byte			2nd Data byte			MFC10 channel number		Remarks
	Status		Data	(HEX)	Parameter	Data	(HEX)	Parameter	When n matches the MFC10's channel number.	When n does not match the MFC10's channel number.	
Key Off	8nH	(n:channel no.)	kk		Key no. (0~127)	vv		Velocity(0~127)	Handled as a message for control by the MFC10.	Handled as a normal Channel/Mode/Realtime message.	
Key On	9nH		kk		Key no. (0~127)	vv		Key On :vv=1~127 Key Off :vv=0	Handled as a message for control by the MFC10.	Handled as a normal Channel/Mode/Realtime message.	
Control Change	BnH		0	(00H)	Bank Select MSB	0 126 127	(00H) (7EH) (7FH)	Normal SFX kit Drum	Handled as a message for control by the MFC10.	Handled as a normal Channel/Mode/Realtime message.	
			1	(01H)	Modulation	0~127	(...7FH)		Handled as a message for control by the MFC10.	Handled as a normal Channel/Mode/Realtime message.	
			2	(02H)	No Assign	0~127	(...7FH)		Handled as a message for control by the MFC10.	Handled as a normal Channel/Mode/Realtime message.	
			3	(03H)	No Assign	0~127	(...7FH)		Handled as a message for control by the MFC10.	Handled as a normal Channel/Mode/Realtime message.	
			4	(04H)	Foot Control	0~127	(...7FH)		Handled as a message for control by the MFC10.	Handled as a normal Channel/Mode/Realtime message.	
			7	(07H)	Main Volume	0~127	(...7FH)		Handled as a message for control by the MFC10.	Handled as a normal Channel/Mode/Realtime message.	
			Other		-	-			-	Handled as a normal Channel/Mode/Realtime message.	
RealTime Message	F8H	MIDI Clock	-			-			Handled as a normal Channel/Mode/Realtime message.	Handled as a normal Channel/Mode/Realtime message.	
	FEH	Active Sens	-			-			Handled as a normal Channel/Mode/Realtime message.	Handled as a normal Channel/Mode/Realtime message.	
Other	Other		-		-	-			-	Handled as a normal Channel/Mode/Realtime message.	

<Table 2> MIDI B OUT

MIDI Events	Status byte		1st Data byte			2nd Data byte			Transmit	Remarks
	Status		Data	(HEX)	Parameter	Data	(HEX)	Parameter		
RealTime Message	FEH	Active Sens	-			-			o	Transmits every 200msec.
SYSTEM EXCLUSIVE MESSAGE	MFC10 Bulk Dump								o	Transmits after checking the connection with the MFC10 and changing the MFC10's channel number.
Other			-		-	-			x	

PROFESSIONAL WORKSTATION

9000Pro

PARTS LIST

CONTENTS

OVERALL ASSEMBLY 2
CONTROL PANEL ASSEMBLY 4
BOTTOM ASSEMBLY 7
SIDE COVER ASSEMBLY L 8
KEYBOARD ASSEMBLY 10
POWER SUPPLY ASSEMBLY 12
ELECTRICAL PARTS 13

Notes : DESTINATION ABBREVIATIONS

A : Australian model	M : South African model
B : British model	O : Chinese model
C : Canadian model	Q : South-east Asia model
D : German model	T : Taiwan model
E : European model	U : U.S.A. model
F : French model	V : General export model (110V)
H : North European model	W: General export model (220)
I : Indonesian model	N,X : General export model
J : Japanese model	Y : Export model

WARNING

Components having special characteristics are marked ⚠ and must be replaced with parts having specification equal to those originally installed.

- The numbers “QTY” show quantities for each unit.
- The parts with “--” in “**PART NO.**” are not available as spare parts.
- This mark “ } ” in the REMARKS column means these parts are interchangeable.
- The second letter of the shaded ( ) part number is O, not zero.
- The second letter of the shaded ( ) part number is I, not one.

OVERALL ASSEMBLY

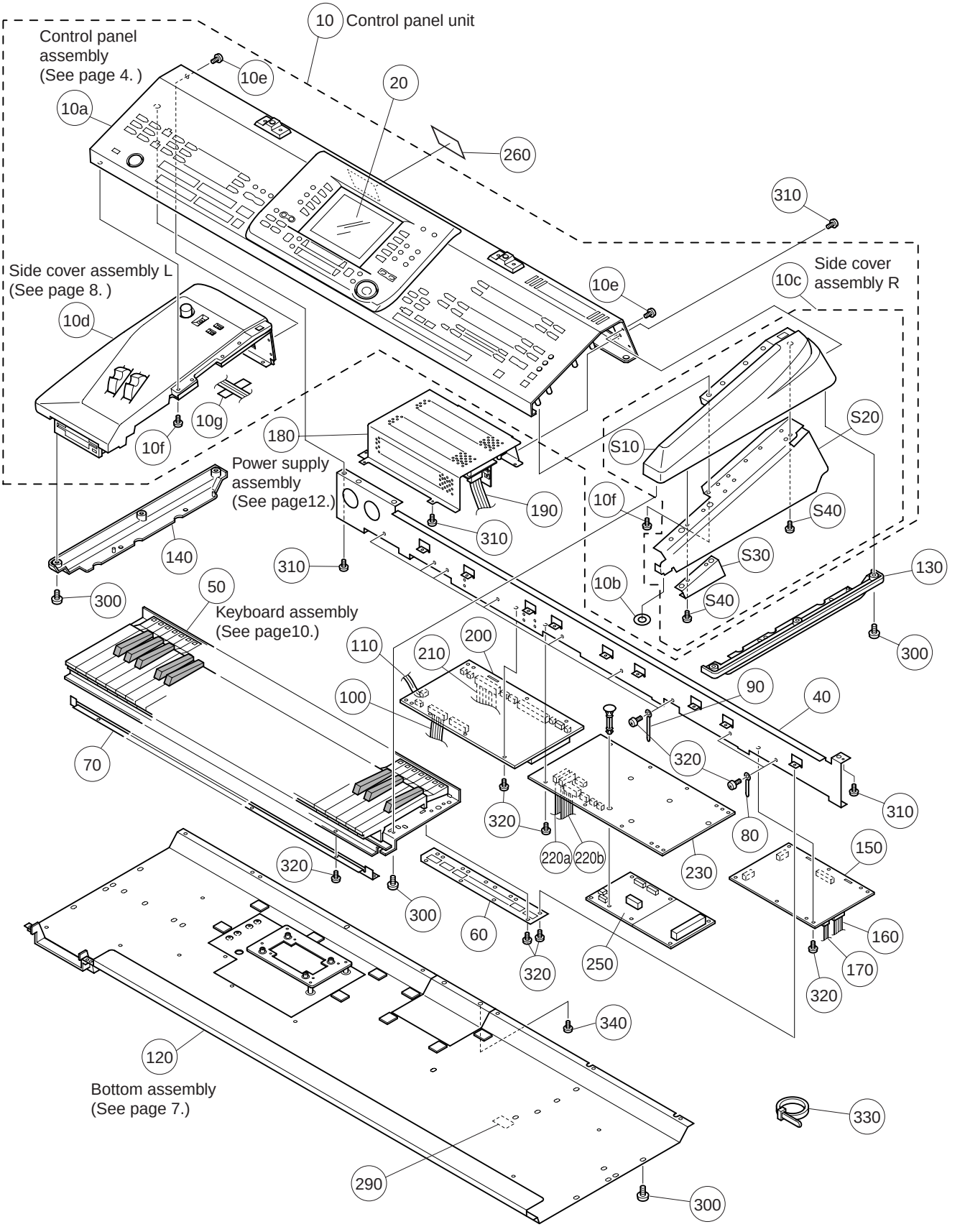

	REF NO.	PART NO.	DESCRIPTION		部品名	REMARKS		QTY	RANK
			OVERALL ASSEMBLY		総組立	9000Pro			
		--	Overall Assembly		総組立	E,B	(V617960)		
		--	Overall Assembly		総組立	U	(V619900)		
	10	--	Control Panel Unit		コンパネユニット		(V618560)		
	10a	--	Control Panel Assembly		コンパネAss'y		(V617860)		
	10b	--	Spacer		スペーサ		(V724270)		
	10c	--	Side Cover Assembly	RIGHT	腕木R Ass'y		(V616680)		
	10d	--	Side Cover Assembly	LEFT	腕木L Ass'y		(V616740)		
	10e	**VN413300**	Bonding Tapping Screw-B	3.0X8 MFZN2BL	ボンディングBタイト			4	01
	10f	**EP600130**	Bind Head Tapping Screw-B	3.0X6 MFZN2Y	+バインドBタイト			8	01
	10g	**VF298800**	Adhesive Tape	19X70	粘着テープ				03
	20	**V4271900**	LCD Protector		LCD保護板				10
*	40	**V6141400**	Center Angle Bracket		センターアングル			10	
	50	**VK325400**	Keyboard Assembly	E76 SW	FS鍵盤Ass'y				52
	60	**VY875900**	Keyboard Support	0.8 FS	鍵盤サポート(FS)			3	04
	70	**VY879100**	Key Slip	FS76	口金(FS)				06
	80	**CB040540**	Cord Binder	S-72B L=50	束線止め			2	01
	90	**CB817510**	Cord Binder	S-14B	束線止め			7	03
*	100	**V5836100**	Connector Assembly	MKFS2 8P-PH-5P	MKFS束線2				
*	110	**V5835900**	Connector Assembly	MKFS1 30P	MKFS束線1				
*	120	**V6168200**	Bottom Assembly		ボトムAss'y				
	130	**VH809800**	Side Board	RIGHT	側板(右)				04
	140	**VH809900**	Side Board	LEFT	側板(左)				04
*	150	**V5829800**	Circuit Board	AM	AMシート				
	160	--	Connector Assembly	MDAC L=680	MDAC束線		(V667090)		
	170	--	Connector Assembly	PS2 XH-4P-5P	電源束線2		(V583390)		
	180	--	Power Supply Assembly		電源Ass'y		(V616810)		
	190	--	Connector Assembly	PS1 VH-9P	電源束線1		(V583380)		
*	200	**V5790500**	Circuit Board	DM	DMシート				
*	210	**V5834800**	Connector Assembly	HDD	HDD束線				09
	220	--	Connector Assembly	PLUG	PLUG束線		(V674720)		
*	220a	**V6745800**	Connector Assembly	PLUG 1 PH-14P	PLUG束線1				
*	220b	**V6745900**	Connector Assembly	PLUG 2 PH-15P	PLUG束線2				
*	230	**V5790600**	Circuit Board	TG	TGシート				
*	250	**V6694300**	Circuit Board	DA	DAシート				
	260	--	Name Plate	E	銘板	E,B	(V677020)		
	260	--	Name Plate	U	銘板	U	(V620480)		
	290	--	Graphic Mark		グラフイツクマーク	U	(V229420)		
	300	**VJ254100**	Bonding Tapping Screw-B	4.0X10 MFZN2BL	ボンディングBタイト			41	01
	310	**VN413300**	Bonding Tapping Screw-B	3.0X8 MFZN2BL	ボンディングBタイト			12	01
	320	**EP600130**	Bind Head Tapping Screw-B	3.0X6 MFZN2Y	+バインドBタイト			57	01
	330	**CB069250**	Cord Holder	BK-1	インシュロックタイ			4	01
	340	**VS863000**	Bonding Head Screw	3.0X6 MFZN2BL	+ボンディング小ネジ			2	01
*	400	**V6884400**	Circuit Board	PW	PWシート				
	410	--	PW-C.B. Holder		PWシート取付け金具		(V688540)		
	420	--	Connector Assembly	PW1	PW束線1		(V689330)		
	430	--	Connector Assembly	PW2	PW束線2		(V689340)		
		--	Side Cover Assembly	RIGHT	腕木R Ass'y		(V616680)		
*	S10	**V5793200**	Side Cover	RIGHT	腕木R塗装品				07
*	S20	**V6149900**	Angle	RIGHT	腕木補強金具R				06
*	S30	**V6157700**	Angle, FSMK	RIGHT	FSMK金具R				02
	S40	**EP600190**	Bind Head Tapping Screw-B	3.0X8 MFZN2BL	+バインドBタイト			4	01
			ACCESSORIES		付属品				
		V4272400	Music Rest Assembly		譜面板Ass'y				10
⚠ *		**V6190700**	AC Cord	VDE	電源コード	E			08
⚠ *		**V6190600**	AC Cord	CSA	電源コード	U			07
⚠		**VP204400**	AC Cord	BS 3	電源コード	B			10
*		**XZ170A00**	Floppy Disk	3.5 1.44M	書込済みFD				04
*		**XZ171A00**	Floppy Disk	3.5 1.44M	書込済みFD				04
*		**XZ172A00**	Floppy Disk	3.5 1.44M	書込済みFD				04
*		**XZ173A00**	Floppy Disk	3.5 1.44M	書込済みFD				04

*: New Parts

RANK: Japan only

CONTROL PANEL ASSEMBLY

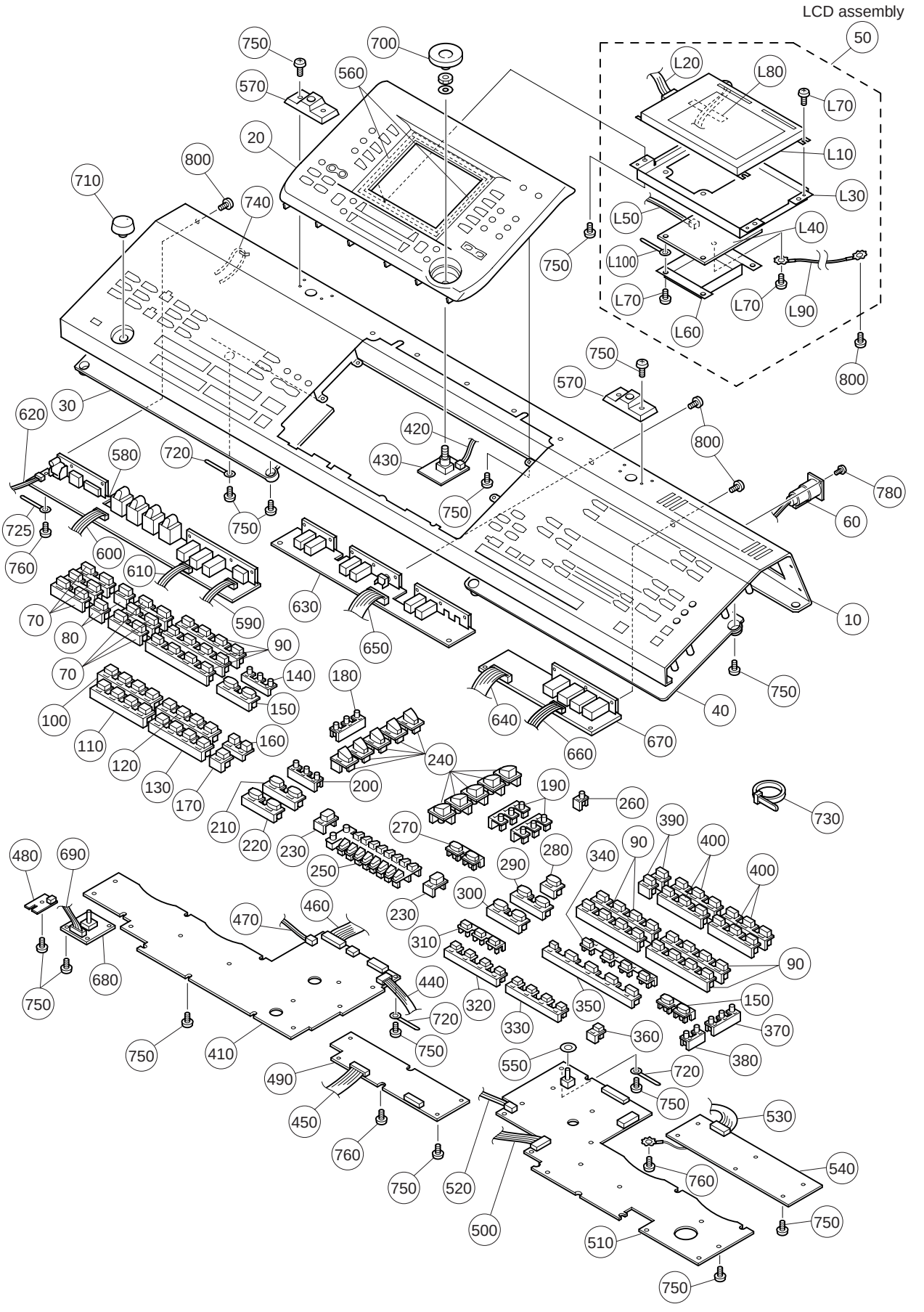

	REF NO.	PART NO.	DESCRIPTION		部品名	REMARKS	QTY	RANK
		--	CONTROL PANEL ASSEMBLY		コンパネＡｓｓ’ｙ	9000Pro (V617860)		
*	10	**V6177100**	Control Panel Sub-Assembly		コンパネサブＡｓｓ’ｙ			19
*	20	**V6177800**	Center Panel		センターパネル印刷品			08
*	30	**V6178100**	Button Guide	LEFT	ボタンガイドＬ加工品			07
*	40	**V6178300**	Button Guide	RIGHT	ボタンガイドＲ加工品			08
	50	--	LCD Assembly		ＬＣＤ Ａｓｓ’ｙ	(V616670)		
	60	--	Connector Assembly	LAMP R XH-2P	ＬＡＭＰ束線Ｒ	(V583580)		
	70	**V3878700**	Key Top	A	キートップ Ａ	SONG FILE DIRECTORY,	6	02
						PRESET STYLE(8BEAT-COUNTR		
	80	**V3878800**	Key Top	B	キートップ Ｂ	SONG PLAYER, AUTO ACCOMP.	2	01
	90	**V3878900**	Key Top	C	キートップ Ｃ	PRESET STYLE(LATIN-BALL),	7	02
						FLASH STYLE		
	100	**V3879000**	Key Top	D1	キートップ Ｄ１	ACCOMPANIMENT CONTROL		02
						(INTRO 1-3, TAP TEMPO)		
	110	**V3879100**	Key Top	D2	キートップ Ｄ２	ACCOMPANIMENT CONTROL		02
						(MAIN VARIATION A-D)		
	120	**V3879200**	Key Top	D3	キートップ Ｄ３	ACCOMPANIMENT CONTROL		02
						(ENDING 1-3, FADE IN/OUT)		
	130	**V3879300**	Key Top	D4	キートップ Ｄ４	ACCOMPANIMENT CONTROL		02
						(FILL IN & BREAK)		
	140	**V3879400**	Key Top	E	キートップ Ｅ	MENU		02
	150	**V3879500**	Key Top	F	キートップ Ｆ	TRANSPOSE, UPPER OCTAVE	2	02
	160	**V3879600**	Key Top	G	キートップ Ｇ	ACCOMPANIMENT CONTROL		02
						(SYNC STOP, SYNC START)		
	170	**V3879700**	Key Top	H	キートップ Ｈ	ACCOMP.CONTROL(START/STOP		01
	180	**V3879800**	Key Top	I1	キートップ Ｉ１	DIGITAL STUDIO		02
	190	**V3879900**	Key Top	I2	キートップ Ｉ２	VOICE EFFECT	2	02
	200	**V3880000**	Key Top	J	キートップ Ｊ	MULTIPAD(STOP, M.PAD BANK		02
	210	**V3880100**	Key Top	K1	キートップ Ｋ１	MULTI PAD(1,2)		02
	220	**V3880200**	Key Top	K2	キートップ Ｋ２	MULTI PAD(3,4)		02
	230	**V3880300**	Key Top	L	キートップ Ｌ	DIRECT ACCESS, EXIT	2	05
	240	**V3880400**	Key Top	M	キートップ Ｍ	LCD select A-J	10	05
	250	**V3880500**	Key Top	N	キートップ Ｎ	LCD select 1-8 Up/Down		11
	260	**V3880600**	Key Top	O	キートップ Ｏ	DEMO		01
	270	**V3880700**	Key Top	P	キートップ Ｐ	PAGE CONTROL		02
	280	**V3880800**	Key Top	Q	キートップ Ｑ	MUSIC DATABASE		01
	290	**V3880900**	Key Top	R1	キートップ Ｒ１	MUSIC DATABASE(1,2)		02
	300	**V3881000**	Key Top	R2	キートップ Ｒ２	MUSIC DATABASE(3,4)		02
	310	**V3881100**	Key Top	S	キートップ Ｓ	REGISTRATION MEMORY		02
						(FREEZE, REGIST BANK)		
	320	**V3881200**	Key Top	T1	キートップ Ｔ１	REGISTRATION MEMORY(1-4)		02
	330	**V3881300**	Key Top	T2	キートップ Ｔ２	REGISTRATION MEMORY(5-8)		02
	340	**V3881400**	Key Top	U	キートップ Ｕ	PART SELECT(LEFT,RIGHT1-3		02
	350	**V3881500**	Key Top	V	キートップ Ｖ	PART ON/OFF		02
						(LEFT HOLD,LEFT,RIGHT1-3)		
	360	**V3881600**	Key Top	W	キートップ Ｗ	MEMORY		01
	370	**V3881700**	Key Top	X	キートップ Ｘ	VOCAL HARMONY(TALK,DSP,VH		02
	380	**V3881800**	Key Top	Y	キートップ Ｙ	VOCAL HARMONY		01
						(SELECT,MIC SETUP)		
*	390	**V6084200**	Key Top	Z	キートップ Ｚ	Plug-In VOICE(SLOT 1,2)	2	02
*	400	**V6179000**	Key Top	3Keys	キートップ３ＫＥＹ	Plug-In VOICE(1-11,BOARD)	4	03
*	410	**V6074000**	Circuit Board	PN1	ＰＮ１シート			
	420	--	Connector Assembly	EN KR-4P	ＥＮ束線	(V603330)		
*	430	**V6074200**	Circuit Board	EN	ＥＮシート			
	440	--	Connector Assembly	PN1 KR-9P	ＰＮ１束線	(V702930)		
	450	--	Connector Assembly	PN2 KR-14P	ＰＮ２束線	(V702940)		
	460	--	Connector Assembly	PN3 1 KR-16P	ＰＮ３束線１	(V610630)		
	470	--	Connector Assembly	LED KR-3P	ＬＥＤ束線	(V583340)		
*	480	**V5895900**	Circuit Board	LED	ＬＥＤシート			
*	490	**V6074100**	Circuit Board	PN2	ＰＮ２シート			
	500	--	Connector Assembly	PN3 2 KR-10P	ＰＮ３束線２	(V603350)		
*	510	**V5813900**	Circuit Board	PN	ＰＮ３シート			
	520	--	Connector Assembly	LCDC KR-3P	ＬＣＤＣ束線	(V583280)		
	530	--	Connector Assembly	PN4 KR-12P	ＰＮ４束線	(V583350)		
*	540	**V5882200**	Circuit Board	PN4	ＰＮ４シート			
	550	**V2320400**	Volume Crosse		ボリュームクロス			03
	560	**VS386300**	Cushion		防塵スポンジ		2	03
*	570	**V6802000**	Bushing		譜面板ブッシュ塗装品		2	
*	580	**V5880200**	Circuit Board	DJACK	ＤＪＡＣＫシート			
	590	--	Connector Assembly	KYB KR-4P	ＫＹＢ束線	(V702950)		

*: New Parts

RANK: Japan only

	REF NO.	PART NO.	DESCRIPTION		部品名	REMARKS	QTY	RANK
	600	--	Connector Assembly	DJACK1 KR-8P	ＤＪＡＣＫ束線１	(V583310)		
	610	--	Connector Assembly	DJACK2 KR-5P	ＤＪＡＣＫ束線２	(V583320)		
	620	--	Connector Assembly	VIDEO FC	ＶＩＤＥＯ束線ＦＣ	(V667200)		
*	630	**V5880300**	Circuit Board	AJACK	ＡＪＡＣＫシート			
	640	--	Connector Assembly	AJACK2 1FC L=650	ＡＪＡＣＫ２束線１ＦＣ	(V667180)		
	650	--	Connector Assembly	AJACK 1FC	ＡＪＡＣＫ束線１ＦＣ	(V667250)		
	660	--	Connector Assembly	AJACK2 2 KR-5P	ＡＪＡＣＫ２束線２	(V583360)		
*	670	**V5882300**	Circuit Board	AJACK2	ＡＪＡＣＫ２シート			
*	680	**V5814000**	Circuit Board	MV	ＭＶシート			
	690	--	Connector Assembly	VR	ＶＲ束線	(V580340)		
	700	**V4561900**	Encoder Knob		エンコーダツマミ	Data dial		05
	710	**VQ218900**	Knob	V	Ｖ－ツマミ	MASTER VOLUME		03
	720	**CB040540**	Cord Binder	S-72B L=50	束線止め		3	01
	725	**CB817510**	Cord Binder	S-14B	束線止め			03
	730	**CB069250**	Cord Holder	BK-1	インシュロックタイ		4	01
	740	**CB070450**	Cord Binder	L=100	束線止め		2	01
	750	**EP600190**	Bind Head Tapping Screw-B	3.0X8 MFZN2BL	＋バインドＢタイト		75	01
	760	**EP600130**	Bind Head Tapping Screw-B	3.0X6 MFZN2Y	＋バインドＢタイト		3	01
	780	**VS206600**	Pan Head Screw	2.5X6 MFZN2BL	＋ナベ小ネジ		2	
	800	**VN413300**	Bonding Tapping Screw-B	3.0X8 MFZN2BL	ボンディングＢタイト		22	01
		--	LCD Assembly		ＬＣＤ Ａｓｓ’ｙ	(V616670)		
	L10	**V3331300**	LCD	EDMMPU3BCF	液晶ディスプレイ			23
	L20	--	Connector Assembly	LCD DF13-14P	ＬＣＤ束線	(V583490)		
*	L30	**V3874200**	LCD Holder		ＬＣＤ固定金具			03
	L40	**VY638900**	Circuit Board	INV	ＩＮＶシート			13
	L50	--	Connector Assembly	INV XH 3P-2P-6P	ＩＮＶ束線	(V583510)		
	L60	**VZ664400**	INV Cover		ＩＮＶカバー			05
	L70	**EP600230**	Bind Head Tapping Screw-B	3.0X6 MFZN2BL	＋バインドＢタイト		8	01
	L80	**VA126100**	Adhesive Tape	12X50	粘着テープ			03
	L90	--	GND Wire 3		アース線３	(V650010)		
	L100	**CB040540**	Cord Binder	S-72B L=50	束線止め			01

*: New Parts

RANK: Japan only

BOTTOM ASSEMBLY

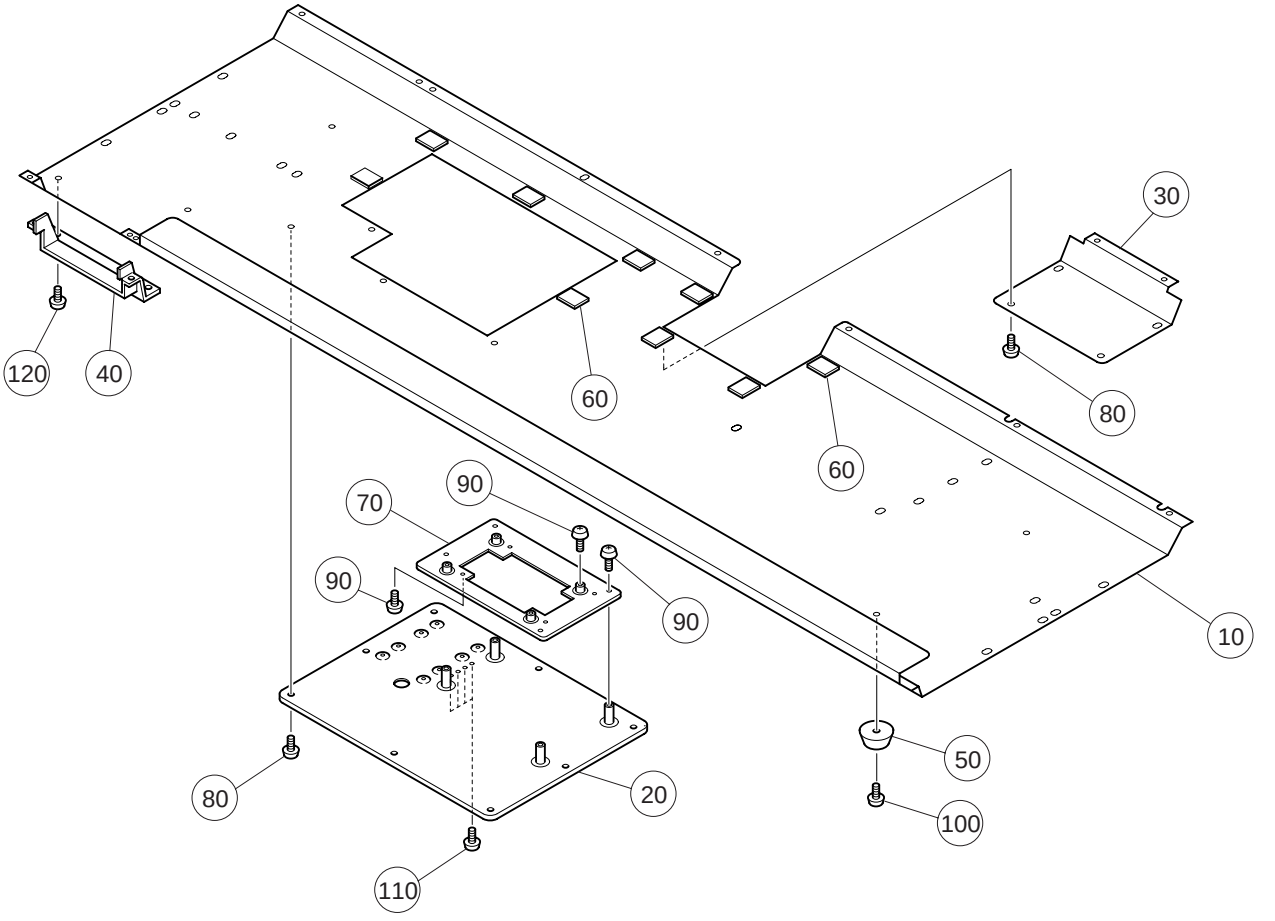

	REF NO.	PART NO.	DESCRIPTION		部品名	REMARKS	QTY	RANK
*		**V6168200**	BOTTOM ASSEMBLY		ボトムAss'y	9000Pro		
	10	**--**	Bottom Board		底板	(V615830)		
*	20	**V6158500**	Cover		オプション蓋			
	30	**VY876200**	Cover	SIMM	SIMM蓋			06
	40	**VY869000**	Escutcheon, FDD		FDDエスカッション			04
	50	**CB801270**	Foot Black		ゴム脚		4	01
	60	**--**	Cushion Tape		クッションテープ	(VP61600)	9	
*	70	**V6159100**	Angle, PL		PLボード取付け板			
	80	**VS863000**	Bonding Head Screw	3.0X6 MFZN2BL	+ボンディング小ネジ		12	01
*	90	**V6770800**	Bonding Tapping Screw-B	3.0X6 MFZN2Y	ボンディングBタイト		12	
	100	**EP600240**	Bind Head Tapping Screw-B	4.0X10 MFZN2BL	+バインドBタイト		4	01
	110	**VG048000**	Bind Head Screw	3.0X4 MFNI33	+バインド小ネジ		4	01
	120	**EP600190**	Bind Head Tapping Screw-B	3.0X8 MFZN2BL	+バインドBタイト		2	01

*: New Parts

RANK: Japan only

SIDE COVER ASSEMBLY L

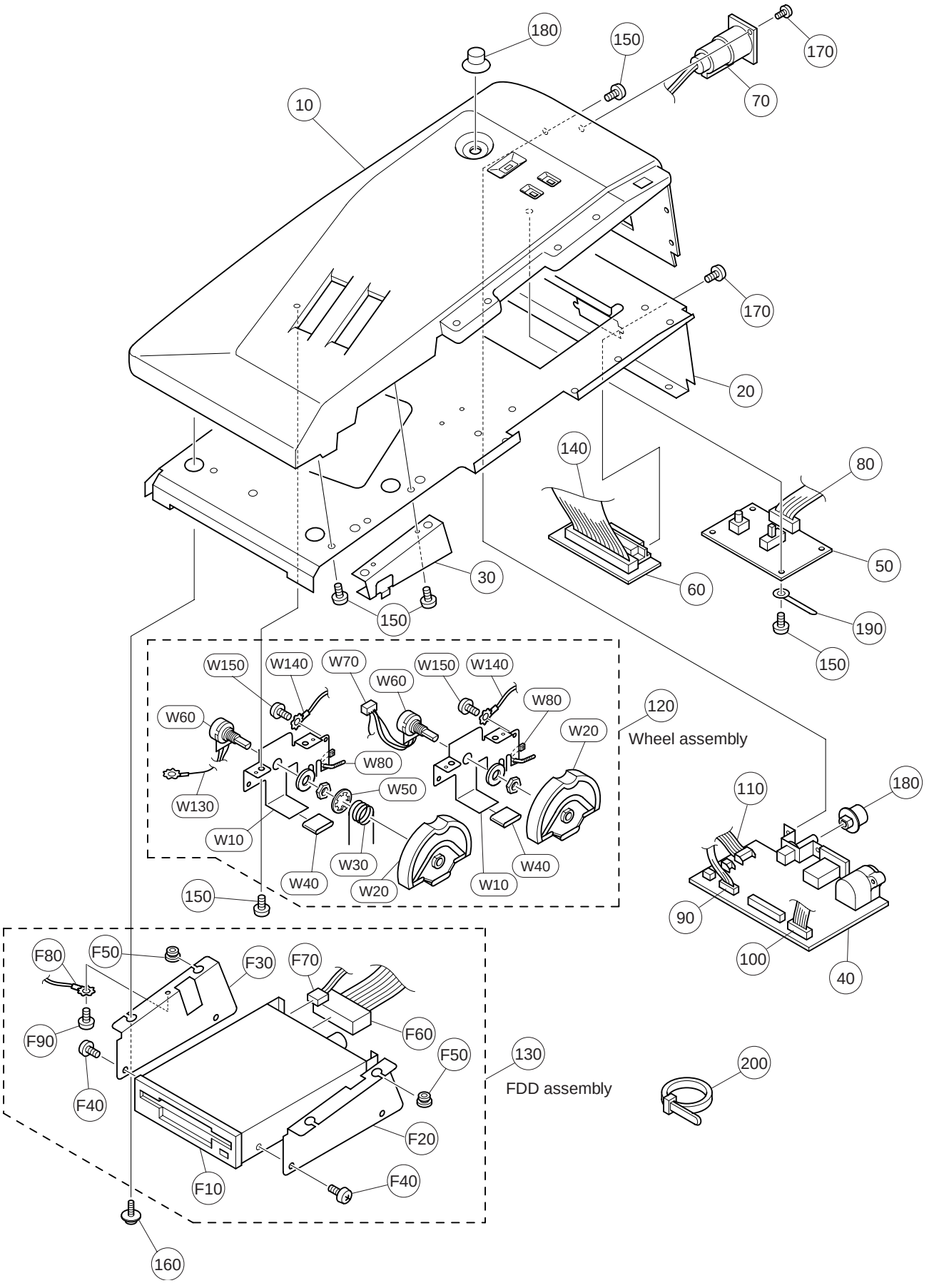

	REF NO.	PART NO.	DESCRIPTION		部品名	REMARKS	QTY	RANK
		--	SIDE COVER ASSEMBLY	LEFT	腕木Ｌ　Ａｓｓ’ｙ	9000Pro (V616740)		
*	10	**V5793100**	Side Cover	LEFT	腕木Ｌ塗装印刷品			09
*	20	**V6149800**	Angle	LEFT	腕木補強金具Ｌ			08
*	30	**V6157600**	Angle	FSMK LEFT	ＦＳＭＫ金具　Ｌ			02
*	40	**V5895700**	Circuit Board	MIC/HP	ＭＩＣ／ＨＰシート			
*	50	**V5895800**	Circuit Board	MIC/VR	ＭＩＣ／ＶＲシート			
	60	**V4271500**	Circuit Board	SCSI	ＳＣＳＩシート			08
	70	--	Connector Assembly	LAMP L XH-3P	ＬＡＭＰ束線Ｌ	(V583570)		
	80	--	Connector Assembly	MICVR KR-14P	ＭＩＣＶＲ束線	(V583550)		
	90	--	Connector Assembly	HP FC L=950	ＨＰ束線ＦＣ	(V667210)		
	100	--	Connector Assembly	MIC FC L=720	ＭＩＣ束線ＦＣ	(V667160)		
	110	--	Connector Assembly	LAMP PS	ＬＡＭＰ電源束線	(V583560)		
	120	--	Wheel Assembly		ホイールＡｓｓ’ｙ	(V617700)		
	130	--	FDD Assembly		ＦＤＤ　Ａｓｓ’ｙ	(V616790)		
*	140	**V5834700**	Connector Assembly	SCSI	ＳＣＳＩ束線			06
	150	**EP600190**	Bind Head Tapping Screw-B	3.0X8 MFZN2BL	＋バインドＢタイト		24	01
	160	**V5115200**	Oval Head Screw	3.0X10	ナベセムスタップタイト		4	01
	170	**VS206600**	Pan Head Screw	2.5X6 MFZN2BL	＋ナベ小ネジ		4	
	180	**V2300100**	Knob	VOLUME	ＶＲノブ	INPUT VOLUME, DIMMER	2	04
	190	**CB817510**	Cord Binder	S-14B	束線止め			03
	200	**CB069250**	Cord Holder	BK-1	インシュロックタイ			01
		--	FDD Assembly		ＦＤＤ　Ａｓｓ’ｙ	(V616790)		
	F10	**V5667800**	Floppy Disk Drive Black	1M/2M 359M3	３．５″ＦＤＤ　ミツミ		15	
	F20	--	Holder, FDD	RIGHT	ＦＤＤ固定金具　Ｒ	(V615700)		
	F30	--	Holder, FDD	LEFT	ＦＤＤ固定金具　Ｌ	(V615680)		
	F40	**VK712400**	Bonding Head Screw	3.0X6 MFNI33	ボンデイングコネジ		4	01
	F50	**VA121600**	Bushing		ゴムブッシュ		4	01
*	F60	**V5834200**	Connector Assembly	FDD	ＦＤＤ束線			05
*	F70	**V5834000**	Connector Assembly	FDD PS	ＦＤＤ電源束線			
	F80	--	GND Wire 2		アース線２	(V626860)		
	F90	**EP600190**	Bind Head Tapping Screw-B	3.0X8 MFZN2BL	＋バインドＢタイト			01
		--	Wheel Assembly		ホイールＡｓｓ’ｙ	(V617700)		
	W10	--	Frame		フレーム	(V453380)	2	
	W20	**V4579900**	Wheel	EX	ホイールＥＸ	PITCH BEND, MODULATION	2	04
	W30	**VC792800**	Spring		リターンＳＰ			01
	W40	**CB819020**	Wheel Tube		ホイールチューブ		2	04
	W50	**EW600110**	Stop Ring	12.0 CS	ＣＳ形止め輪			01
	W60	**VT695100**	Rotary Variable Resistor	10.0K RK163111	ロータリーＶＲ	PITCH BEND, MODULATION	2	03
	W70	--	Connector	WL KR 4P	ＷＬ束線	(V583540)		
	W80	**CB069250**	Cord Holder	BK-1	インシュロックタイ		2	01
	W130	--	GND Wire 7		アース線７	(V522980)		
	W140	--	GND Wire 1		アース線１	(V626850)		
	W150	**EP600190**	Bind Head Tapping Screw-B	3.0X8 MFZN2BL	＋バインドＢタイト		2	01

*: New Parts

RANK: Japan only

KEYBOARD ASSEMBLY

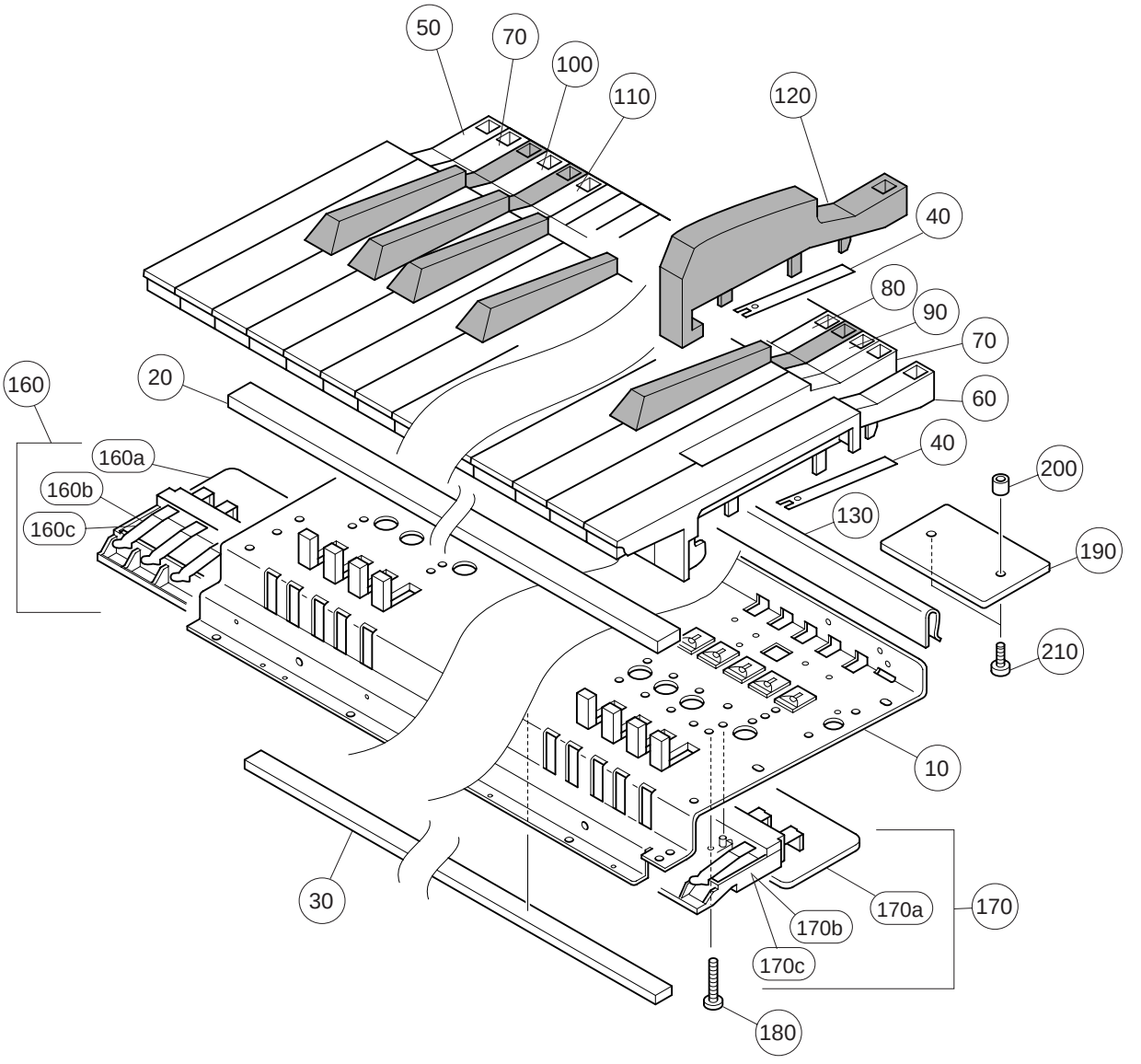

REF NO.	PART NO.	DESCRIPTION		部品名	REMARKS	QTY	RANK
	VK325400	KEYBOARD ASSEMBLY	FS E76 SW	ＦＳ鍵盤Ａｓｓ’ｙ	9000Pro		52
10	**--**	MK Frame	FS	ＭＫフレーム	(VK32570)		
20	**VK735000**	PC Sensor	MK-FS76TO	ＰＣセンサー			11
30	**--**	Felt White	1027X6X2.8	フェルトシロ	(VQ17610)		
40	**AA055430**	Key Spring		鍵バネ		76	02
50	**NB826010**	White Key Assembly	E'	白鍵キーＡｓｓ’ｙ Ｅ’			04
60	**NB826020**	White Key Assembly	G'	白鍵キーＡｓｓ’ｙ Ｇ’			04
70	**NB107540**	White Key Assembly	C.F	キーＡｓｓ’ｙ Ｃ．Ｆ		13	04
80	**NB107550**	White Key Assembly	D FS	キーＡｓｓ’ｙ Ｄ		6	04
90	**NB107560**	White Key Assembly	B.E FS	キーＡｓｓ’ｙ Ｂ．Ｅ		12	04
100	**NB107570**	White Key Assembly	G FS	キーＡｓｓ’ｙ Ｇ		6	04
110	**NB107580**	White Key Assembly	A FS	キーＡｓｓ’ｙ Ａ		6	04
120	**NB107600**	Black Key Assembly	FS	キーＡｓｓ’ｙ黒鍵		31	04
130	**VK325600**	Stopper	FS E76	ストッパー			04
160	**NB825940**	Switch Unit	E76 FS	ＭＫスイッチユニット			17
160a	**NA810850**	Circuit Board	MK-1	ＭＫ－１シ－ト			07
160b	**NB107130**	Switch Assembly	9I FS	スイッチＡｓｓ’ｙ			10
160c	**NB107120**	Switch Assembly	12Q FS	スイッチＡｓｓ’ｙ		2	10
170	**NB825950**	Switch Unit	E76 FS	ＭＫスイッチユニット			19
170a	**NA810860**	Circuit Board	MK-2	ＮＫ－２シ－ト			08
170b	**NB107120**	Switch Assembly	12Q FS	スイッチＡｓｓ’ｙ		3	10
170c	**NB107150**	Switch Assembly	7G FS	スイッチＡｓｓ’ｙ			08
180	**VF347000**	Bind Head Tapping Screw-S	3.0X16 MFZN2Y	＋バインドＳタイト		20	01
190	**VK263600**	Circuit Board	PC	ＰＣシート			08
200	**VA032600**	Spacer		スペーサ		2	01
210	**VH553800**	Bind Head Tapping Screw-S	3.0X12 MFZN2Y	＋バインドＳタイト		2	01

✻: New Parts

RANK: Japan only

POWER SUPPLY ASSEMBLY

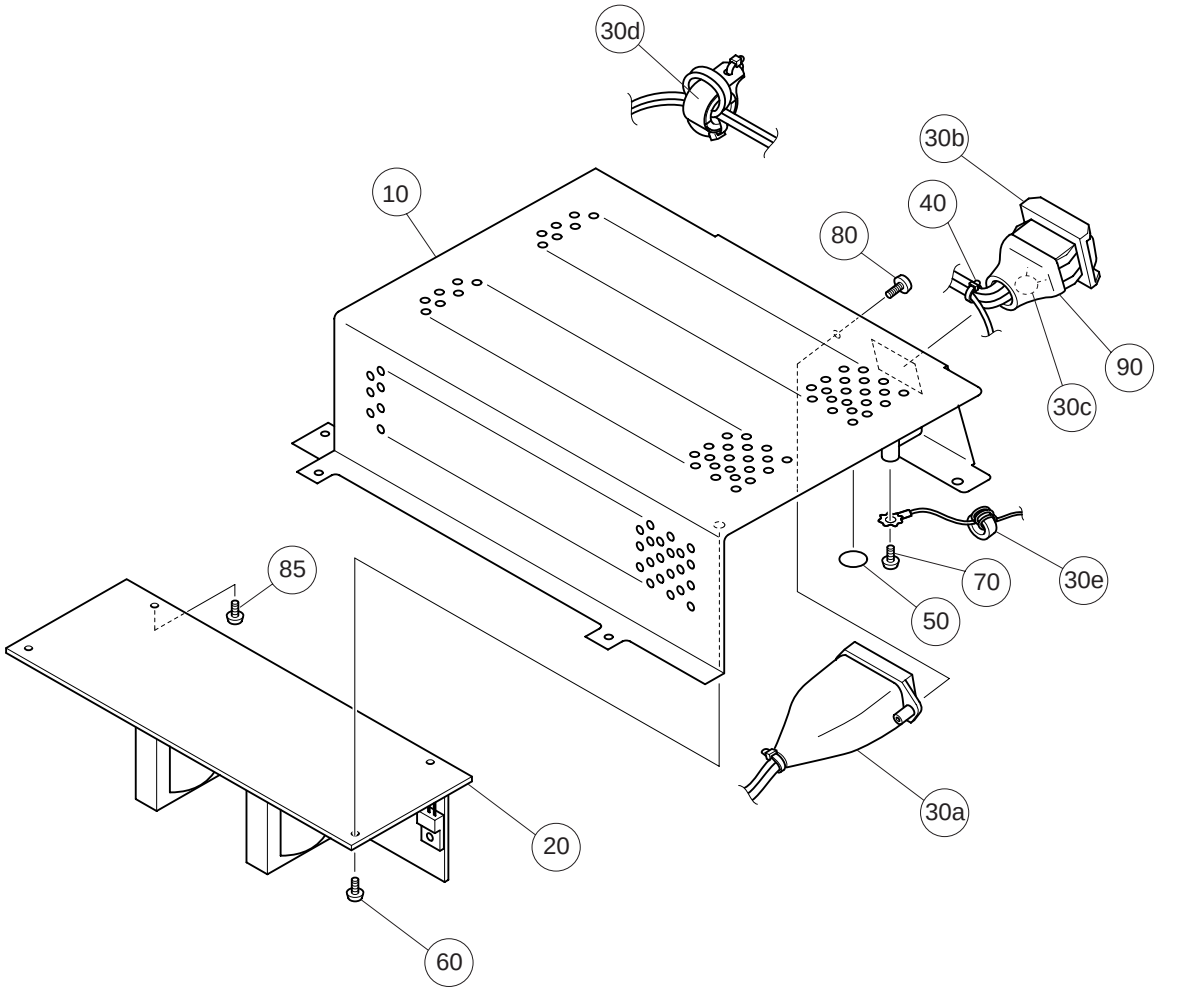

	REF NO.	PART NO.	DESCRIPTION		部品名	REMARKS	QTY	RANK
		--	POWER SUPPLY ASSEMBLY		電源Ａｓｓ’ｙ	9000Pro (V616810)		
	10	--	Frame		電源フレーム	(V611320)		
⚠ *	20	**V5557500**	Power Supply Unit	CE,U,CS	電源ユニット			
⚠	30	--	Connector Assembly	INLET	ＩＮＬＥＴ束線	(V583630)		
	30a	**VL785200**	AC-IN Connector	AC-P01CR02	ＡＣインレット	AC INLET		03
*	30b	**V6033400**	Power Switch	JW-M21RKK U.C.V.	シーソーＳＷ	POWER ON/OFF		06
	30c	**V3311600**	Capacitor-KH	0.010 250V J.U.C.S	規格認定コンＫＨ			01
*	30d	**VP799500**	Ferrite Core	KBM16HA-00	フェライトコア			04
*	30e	**VT973300**	Ferrite Core	KBM12HA-00	フェライトコア			04
	40	**CB069250**	Cord Holder	BK-1	インシュロックタイ		3	01
	50	**CA060690**	Earth Mark		アースマーク			01
	60	**EP600130**	Bind Head Tapping Screw-B	3.0X6 MFZN2Y	＋バインドＢタイト		2	01
	70	**EG340190**	Bind Head Tapping Screw-B	4.0X8 MFZN2BL	＋バインドＢタイト			01
	80	**VN413300**	Bonding Tapping Screw-B	3.0X8 MFZN2BL	ボンディングＢタイト		2	01
	85	**EP600250**	Bind Head Tapping Screw-B	3.0X8 MFZN2Y	＋バインドＢタイト		2	01
	90	--	Adhesive Tape	630F 30	粘着テープ	(V673800)		

*: New Parts

RANK: Japan only

■ ELECTRICAL PARTS

	REF NO.	PART NO.	DESCRIPTION		部品名	REMARKS	QTY	RANK
			ELECTRICAL PARTS		電気部品	9000Pro		
*		**V5880300**	Circuit Board	AJACK	ＡＪＡＣＫシート	(XV936B0)		
*		**V5880200**	Circuit Board	DJACK	ＤＪＡＣＫシート	(XV936B0)		
*		**V5882300**	Circuit Board	AJACK2	ＡＪＡＣＫ２シート	(XY645B0)		
*		**V5829800**	Circuit Board	AM	ＡＭシート	(XY703C0)		
*		**V6694300**	Circuit Board	DA	ＤＡシート	(XY836C0)		
*		**V5790500**	Circuit Board	DM	ＤＭシート	(XY733C0)		
		VY638900	Circuit Board	INV	ＩＮＶシート	(XT122A0)		13
*		**V5895700**	Circuit Board	MIC/HP	ＭＩＣ／ＨＰシート	(XY704C0)		
*		**V5895800**	Circuit Board	MIC/VR	ＭＩＣ／ＶＲシート	(XY704C0)		
*		**V5895900**	Circuit Board	LED	ＬＥＤシート	(XY704C0)		
		NA810850	Circuit Board	MK-1	ＭＫ－１シート	(LC90213)		07
		NA810860	Circuit Board	MK-2	ＭＫ－２シート	(LC90223)		08
		VK263600	Circuit Board	PC	ＰＣシート	(XI930B0)		08
*		**V6074000**	Circuit Board	PN1	ＰＮ１シート	(XW443B0)		
*		**V6074100**	Circuit Board	PN2	ＰＮ２シート	(XW443B0)		
*		**V6074200**	Circuit Board	EN	ＥＮシート	(XW443B0)		
*		**V5813900**	Circuit Board	PN3	ＰＮ３シート	(XW438B0)		
*		**V5814000**	Circuit Board	MV	ＭＶシート	(XW438B0)		
*		**V5882200**	Circuit Board	PN4	ＰＮ４シート	(XY586B0)		
*		**V6884400**	Circuit Board	PW	ＰＷシート	(XZ692B0)		
		V4271500	Circuit Board	SCSI	ＳＣＳＩシート	(XW083C0)		08
*		**V5790600**	Circuit Board	TG	ＴＧシート	(XY734C0)		
*		**V5880300**	Circuit Board	AJACK	ＡＪＡＣＫシート	(XV936B0)		
*		**V5880200**	Circuit Board	DJACK	ＤＪＡＣＫシート	(XV936B0)		
		EP600140	Bind Head Tapping Screw-B	3.0X10 MFZN2BL	＋バインドＢタイト			01
		--	Jumper Wire	0.55	ジャンパー線	(VD04170)		
	C0001	**VC694800**	Semiconductive Cera. Cap.	0.1000 25V Z	半導体セラコン			01
	C0002	**UR866100**	Electrolytic Cap.	1.00 50.0V	ケミコン			01
	C0003	**VC694800**	Semiconductive Cera. Cap.	0.1000 25V Z	半導体セラコン			01
	C0004	**VC694800**	Semiconductive Cera. Cap.	0.1000 25V Z	半導体セラコン			01
	C0005	**FG612220**	Ceramic Capacitor-B	220P 50V K	セラコン（Ｂ）			01
	C0006	**FG612220**	Ceramic Capacitor-B	220P 50V K	セラコン（Ｂ）			01
	C0007	**FG644100**	Ceramic Capacitor-F	0.0100 50V Z	セラコン（Ｆ）			01
	C0008	**FG644100**	Ceramic Capacitor-F	0.0100 50V Z	セラコン（Ｆ）			01
	C0009	**FG612220**	Ceramic Capacitor-B	220P 50V K	セラコン（Ｂ）			01
	C0010	**FG612220**	Ceramic Capacitor-B	220P 50V K	セラコン（Ｂ）			01
	C0011	**FG644100**	Ceramic Capacitor-F	0.0100 50V Z	セラコン（Ｆ）			01
	C0012	**FG644100**	Ceramic Capacitor-F	0.0100 50V Z	セラコン（Ｆ）			01
	C0013	**UR837100**	Electrolytic Cap.	10.00 16.0V	ケミコン			01
	C0014	**FG644100**	Ceramic Capacitor-F	0.0100 50V Z	セラコン（Ｆ）			01
	C0015	**FG644100**	Ceramic Capacitor-F	0.0100 50V Z	セラコン（Ｆ）			01
	C0016	**UN817470**	Electrolytic Cap.-BP	47.00 6.3V	ＢＰケミコン			01
	C0017	**FG644100**	Ceramic Capacitor-F	0.0100 50V Z	セラコン（Ｆ）			01
	C0018	**FG613100**	Ceramic Capacitor-B	1000P 50V K	セラコン（Ｂ）			01
	C0019	**FG644100**	Ceramic Capacitor-F	0.0100 50V Z	セラコン（Ｆ）			01
	C0020	**VC694800**	Semiconductive Cera. Cap.	0.1000 25V Z	半導体セラコン			01
	C0101	**FG613100**	Ceramic Capacitor-B	1000P 50V K	セラコン（Ｂ）			01
	C0102	**FG613100**	Ceramic Capacitor-B	1000P 50V K	セラコン（Ｂ）			01
	C0103	**UN866470**	Electrolytic Cap.-BP	4.70 50.0V	ＢＰケミコン			01
	C0104	**UN866470**	Electrolytic Cap.-BP	4.70 50.0V	ＢＰケミコン			01
	C0105	**FG613100**	Ceramic Capacitor-B	1000P 50V K	セラコン（Ｂ）			01
	C0106	**FG613100**	Ceramic Capacitor-B	1000P 50V K	セラコン（Ｂ）			01
	C0109	**FG644100**	Ceramic Capacitor-F	0.0100 50V Z	セラコン（Ｆ）			01
	CN001	**VB390100**	Connector Base Post	PH- 5P TE	コネクタベースポスト			01
	CN002	**VB390400**	Connector Base Post	PH- 8P TE	コネクタベースポスト			01
	CN003	**VB390000**	Connector Base Post	PH- 4P TE	コネクタベースポスト			01
	CN004	**VB389800**	Connector Base Post	PH- 2P TE	コネクタベースポスト			01
	CN101	**VE352600**	Connector Base Post	PH-14P TE	コネクタベースポスト			01
	D0001	**VB941200**	Diode	1SS133,1SS176	ダイオード			01
	-0006	**VB941200**	Diode	1SS133,1SS176	ダイオード			01
	IC001	**VD473200**	Photo Coupler	6N137	フォトカプラ			05
	IC002	**VD473200**	Photo Coupler	6N137	フォトカプラ			05
	IC003	**XU463A00**	IC	SN75C1168N	Ｉ　Ｃ	LINE DRIVER/RECEIVER		05
	IC004	**IG142250**	IC	SN74HCU04N	Ｉ　Ｃ	INVERTER		01
	JK001	**VS056300**	Phone Jack	HLJ7001-01	ホーンコネクタ	FOOT PEDAL(VOLUME)		01
	JK002	**VB312600**	Phone Jack	YKB21-5012 Black	ホーンコネクタ（黒）	FOOT PEDAL(SWITCH 2)		02
	JK003	**VB312600**	Phone Jack	YKB21-5012 Black	ホーンコネクタ（黒）	FOOT PEDAL(SWITCH 1)		02
	JK004	**VJ249300**	DIN Connector	5P3 YKF51-50	ＤＩＮコネクタ２連	MIDI B(IN,OUT)		03

*: New Parts

RANK: Japan only

REF NO.	PART NO.	DESCRIPTION		部品名	REMARKS	QTY	RANK
JK005	**VJ249300**	DIN Connector	5P3 YKF51-50	ＤＩＮコネクタ２連	MIDI A(IN,OUT)		03
JK006	**VM761000**	DIN Connector	DIN 8P MD-S810	複合コネクタ	TO HOST		03
JK007	**VZ743800**	DIN Connector	DIN 6P MD-S610	複合コネクタ	PC KEYBOARD		02
JK008	**VI311100**	Pin Jack	1P YKC21-3017	ピンジャック　１Ｐ	VIDEO OUT		01
JK101	**LB101870**	Phone Jack	YKB21-5006	ホーンコネクタ	LOOP SEND(L/L+R)		03
JK102	**VB312600**	Phone Jack	YKB21-5012 Black	ホーンコネクタ（黒）	LOOP SEND(R)		02
JK103	**VB312600**	Phone Jack	YKB21-5012 Black	ホーンコネクタ（黒）	AUX IN/LOOP RETURN(L/L+R)		02
JK104	**VB312600**	Phone Jack	YKB21-5012 Black	ホーンコネクタ（黒）	AUX IN/LOOP RETURN(R)		02
JK105	**VC687500**	Phone Jack	YKB21-5014 Black	ホーンコネクタ（黒）	LINE OUT MAIN(L/L+R)		01
JK106	**VB312600**	Phone Jack	YKB21-5012 Black	ホーンコネクタ（黒）	LINE OUT MAIN(R)		02
L0001	**VB835000**	Coil	FL5R200QNT 20uH	コイル　２０Ｕ			01
-0020	**VB835000**	Coil	FL5R200QNT 20uH	コイル　２０Ｕ			01
L0021	**GE300670**	Ferrite Bead	BL02RN2-R62T4	フェライトビーズ			02
L0022	**GE300670**	Ferrite Bead	BL02RN2-R62T4	フェライトビーズ			02
L0101	**VB835000**	Coil	FL5R200QNT 20uH	コイル　２０Ｕ			01
L0102	**VB835000**	Coil	FL5R200QNT 20uH	コイル　２０Ｕ			01
L0103	**GE300670**	Ferrite Bead	BL02RN2-R62T4	フェライトビーズ			02
L0104	**VB835000**	Coil	FL5R200QNT 20uH	コイル　２０Ｕ			01
L0105	**VB835000**	Coil	FL5R200QNT 20uH	コイル　２０Ｕ			01
L0106	**VF456600**	Coil	SBT-0180W 80uH	コイル　８０Ｕ			03
L0107	**VF456600**	Coil	SBT-0180W 80uH	コイル　８０Ｕ			03
L0108	**VB835000**	Coil	FL5R200QNT 20uH	コイル　２０Ｕ			01
L0109	**GE300670**	Ferrite Bead	BL02RN2-R62T4	フェライトビーズ			02
L0110	**VB835000**	Coil	FL5R200QNT 20uH	コイル　２０Ｕ			01
MFA	**--**	JACK Holder	A	ジャック金具　Ａ	(V387430)		
MFB	**--**	JACK Holder	B	ジャック金具　Ｂ	(V387440)		
MFC	**--**	JACK Holder	C	ジャック金具　Ｃ	(V387450)		
MFD	**--**	JACK Holder	D	ジャック金具　Ｄ	(V387460)		
MFE	**--**	JACK Holder	E	ジャック金具　Ｅ	(V387470)		
R0001	**HF757100**	Carbon Resistor	10.0K 1/4 J	カーボン抵抗			01
R0002	**HF756100**	Carbon Resistor	1.0K 1/4 J	カーボン抵抗			01
-0004	**HF756100**	Carbon Resistor	1.0K 1/4 J	カーボン抵抗			01
R0005	**HF757220**	Carbon Resistor	22.0K 1/4 J	カーボン抵抗			01
R0006	**HF758470**	Carbon Resistor	470.0K 1/4 J	カーボン抵抗			01
R0007	**HF756100**	Carbon Resistor	1.0K 1/4 J	カーボン抵抗			01
R0008	**HF756100**	Carbon Resistor	1.0K 1/4 J	カーボン抵抗			01
R0009	**HF757220**	Carbon Resistor	22.0K 1/4 J	カーボン抵抗			01
R0010	**HF758470**	Carbon Resistor	470.0K 1/4 J	カーボン抵抗			01
R0011	**HF755220**	Carbon Resistor	220.0 1/4 J	カーボン抵抗			01
-0013	**HF755220**	Carbon Resistor	220.0 1/4 J	カーボン抵抗			01
R0014	**HF756100**	Carbon Resistor	1.0K 1/4 J	カーボン抵抗			01
R0015	**HF755220**	Carbon Resistor	220.0 1/4 J	カーボン抵抗			01
-0017	**HF755220**	Carbon Resistor	220.0 1/4 J	カーボン抵抗			01
R0018	**HF756100**	Carbon Resistor	1.0K 1/4 J	カーボン抵抗			01
R0019	**HF757100**	Carbon Resistor	10.0K 1/4 J	カーボン抵抗			01
-0023	**HF757100**	Carbon Resistor	10.0K 1/4 J	カーボン抵抗			01
R0024	**HF755220**	Carbon Resistor	220.0 1/4 J	カーボン抵抗			01
R0025	**HF757100**	Carbon Resistor	10.0K 1/4 J	カーボン抵抗			01
R0026	**HF755220**	Carbon Resistor	220.0 1/4 J	カーボン抵抗			01
R0027	**HF757100**	Carbon Resistor	10.0K 1/4 J	カーボン抵抗			01
R0028	**HF755100**	Carbon Resistor	100.0 1/4 J	カーボン抵抗			01
R0029	**HF755100**	Carbon Resistor	100.0 1/4 J	カーボン抵抗			01
R0030	**HF756100**	Carbon Resistor	1.0K 1/4 J	カーボン抵抗			01
R0031	**HF757100**	Carbon Resistor	10.0K 1/4 J	カーボン抵抗			01
R0032	**HF757100**	Carbon Resistor	10.0K 1/4 J	カーボン抵抗			01
R0033	**HF756100**	Carbon Resistor	1.0K 1/4 J	カーボン抵抗			01
R0102	**HF757100**	Carbon Resistor	10.0K 1/4 J	カーボン抵抗			01
-0105	**HF757100**	Carbon Resistor	10.0K 1/4 J	カーボン抵抗			01
SW001	**VQ665200**	Slide Switch	SSSF144-S06N-0	スライドＳＷ	HOST SELECT		03
VR101	**VV049200**	Rotary Variable Resistor	B 10K RK09K12A0	２連ロータリーＶＲ	AUX IN/LOOP RETURN(TRIM)		03
WB001	**GE300670**	Ferrite Bead	BL02RN2-R62T4	フェライトビーズ			02
-007	**GE300670**	Ferrite Bead	BL02RN2-R62T4	フェライトビーズ			02
*	**V5882300**	Circuit Board	AJACK2	ＡＪＡＣＫ２シート	(XY645B0)		
	--	Jumper Wire	0.55	ジャンパー線	(VD04170)		
C0014	**UR848100**	Electrolytic Cap.	100.00 25.0V	ケミコン			01
C0015	**FG613100**	Ceramic Capacitor-B	1000P 50V K	セラコン（Ｂ）			01
-0018	**FG613100**	Ceramic Capacitor-B	1000P 50V K	セラコン（Ｂ）			01
C0019	**FG644100**	Ceramic Capacitor-F	0.0100 50V Z	セラコン（Ｆ）			01
CN001	**VB390800**	Connector Base Post	PH-12P TE	コネクタベースポスト			01

*: New Parts　　RANK: Japan only

REF NO.	PART NO.	DESCRIPTION		部品名	REMARKS	QTY	RANK
CN002	**VB390100**	Connector Base Post	PH- 5P TE	コネクタベースポスト			01
D0001	**VB941200**	Diode	1SS133,1SS176	ダイオード			01
D0002	**VB941200**	Diode	1SS133,1SS176	ダイオード			01
JK001	**LB101870**	Phone Jack	YKB21-5006	ホーンコネクタ	SUB(1)		03
JK002	**LB101870**	Phone Jack	YKB21-5006	ホーンコネクタ	SUB(2)		03
JK003	**LB101870**	Phone Jack	YKB21-5006	ホーンコネクタ	SUB(3)		03
JK004	**LB101870**	Phone Jack	YKB21-5006	ホーンコネクタ	SUB(4)		03
L0001	**GE300670**	Ferrite Bead	BL02RN2-R62T4	フェライトビーズ			02
-0007	**GE300670**	Ferrite Bead	BL02RN2-R62T4	フェライトビーズ			02
L0008	**VB835000**	Coil	FL5R200QNT 20uH	コイル 20U			01
-0011	**VB835000**	Coil	FL5R200QNT 20uH	コイル 20U			01
MFC	**--**	JACK Holder	C	ジャック金具C	(V387450)		
R0009	**HF757100**	Carbon Resistor	10.0K 1/4 J	カーボン抵抗			01
-0012	**HF757100**	Carbon Resistor	10.0K 1/4 J	カーボン抵抗			01
R0013	**HF756470**	Carbon Resistor	4.7K 1/4 J	カーボン抵抗			01
R0014	**HF757100**	Carbon Resistor	10.0K 1/4 J	カーボン抵抗			01
R0015	**HF755560**	Carbon Resistor	560.0 1/4 J	カーボン抵抗			01
-0018	**HF755560**	Carbon Resistor	560.0 1/4 J	カーボン抵抗			01
R0019	**--**	Jumper Wire	0.55	ジャンパー線	(VD04170)		
R0020	**--**	Jumper Wire	0.55	ジャンパー線	(VD04170)		
R0021	**HF757100**	Carbon Resistor	10.0K 1/4 J	カーボン抵抗			01
-0024	**HF757100**	Carbon Resistor	10.0K 1/4 J	カーボン抵抗			01
RY001	**VZ057500**	Relay	DC MR82-12USR 12V	リレー 12V			04
RY002	**VZ057500**	Relay	DC MR82-12USR 12V	リレー 12V			04
TR001	**IC174020**	Transistor	2SC1740S R,S	トランジスタ			01
*	**V5829800**	Circuit Board	AM	AMシート	(XY703C0)		
	--	Jumper Wire	0.55	ジャンパー線	(VD04170)		
C0002	**UR848100**	Electrolytic Cap.	100.00 25.0V	ケミコン			01
C0003	**VC694800**	Semiconductive Cera. Cap.	0.1000 25V Z	半導体セラコン			01
C0004	**VC694800**	Semiconductive Cera. Cap.	0.1000 25V Z	半導体セラコン			01
C0005	**FG651470**	Ceramic Capacitor-SL	47P 50V J	セラコン(SL)			01
C0006	**FG651470**	Ceramic Capacitor-SL	47P 50V J	セラコン(SL)			01
C0007	**UR847470**	Electrolytic Cap.	47.00 25.0V	ケミコン			01
C0008	**UN866470**	Electrolytic Cap.-BP	4.70 50.0V	BPケミコン			01
C0009	**FG651270**	Ceramic Capacitor-SL	27P 50V J	セラコン(SL)			01
C0010	**UN847470**	Electrolytic Cap.-BP	47.00 25.0V	BPケミコン			01
C0011	**UN866470**	Electrolytic Cap.-BP	4.70 50.0V	BPケミコン			01
C0012	**FG651270**	Ceramic Capacitor-SL	27P 50V J	セラコン(SL)			01
C0013	**UN847470**	Electrolytic Cap.-BP	47.00 25.0V	BPケミコン			01
C0014	**VC694800**	Semiconductive Cera. Cap.	0.1000 25V Z	半導体セラコン			01
C0015	**VC694800**	Semiconductive Cera. Cap.	0.1000 25V Z	半導体セラコン			01
C0016	**FG613220**	Ceramic Capacitor-B	2200P 50V K	セラコン(B)			01
C0017	**FG613220**	Ceramic Capacitor-B	2200P 50V K	セラコン(B)			01
C0018	**UN866470**	Electrolytic Cap.-BP	4.70 50.0V	BPケミコン			01
C0019	**FG651680**	Ceramic Capacitor-SL	68P 50V J	セラコン(SL)			01
C0020	**UA355100**	Mylar Capacitor	0.1000 50V J	マイラーコン			01
C0021	**UN848100**	Electrolytic Cap.-BP	100.00 25.0V	BPケミコン			01
C0022	**VC694800**	Semiconductive Cera. Cap.	0.1000 25V Z	半導体セラコン			01
C0023	**VC694800**	Semiconductive Cera. Cap.	0.1000 25V Z	半導体セラコン			01
C0024	**UN866470**	Electrolytic Cap.-BP	4.70 50.0V	BPケミコン			01
C0025	**FG651680**	Ceramic Capacitor-SL	68P 50V J	セラコン(SL)			01
C0026	**UA355100**	Mylar Capacitor	0.1000 50V J	マイラーコン			01
C0027	**UN848100**	Electrolytic Cap.-BP	100.00 25.0V	BPケミコン			01
C0028	**UN866470**	Electrolytic Cap.-BP	4.70 50.0V	BPケミコン			01
C0029	**FG651330**	Ceramic Capacitor-SL	33P 50V J	セラコン(SL)			01
C0030	**UN866470**	Electrolytic Cap.-BP	4.70 50.0V	BPケミコン			01
C0031	**UN866470**	Electrolytic Cap.-BP	4.70 50.0V	BPケミコン			01
C0032	**FG651330**	Ceramic Capacitor-SL	33P 50V J	セラコン(SL)			01
C0033	**UN866470**	Electrolytic Cap.-BP	4.70 50.0V	BPケミコン			01
C0034	**VC694800**	Semiconductive Cera. Cap.	0.1000 25V Z	半導体セラコン			01
C0035	**VC694800**	Semiconductive Cera. Cap.	0.1000 25V Z	半導体セラコン			01
C0036	**UN866470**	Electrolytic Cap.-BP	4.70 50.0V	BPケミコン			01
C0037	**FG651330**	Ceramic Capacitor-SL	33P 50V J	セラコン(SL)			01
C0038	**UN847100**	Electrolytic Cap.-BP	10.00 25.0V	BPケミコン			01
C0039	**UN866470**	Electrolytic Cap.-BP	4.70 50.0V	BPケミコン			01
C0040	**FG651330**	Ceramic Capacitor-SL	33P 50V J	セラコン(SL)			01
C0041	**UN847100**	Electrolytic Cap.-BP	10.00 25.0V	BPケミコン			01
C0042	**VC694800**	Semiconductive Cera. Cap.	0.1000 25V Z	半導体セラコン			01
C0043	**VC694800**	Semiconductive Cera. Cap.	0.1000 25V Z	半導体セラコン			01

※: New Parts

RANK: Japan only

REF NO.	PART NO.	DESCRIPTION		部品名	REMARKS	QTY	RANK
CN001	**VB390600**	Connector Base Post	PH-10P TE	コネクタベースポスト			01
CN002	**LB918040**	Base Post Connector	XH- 4P TE	ベースツキポスト			01
CN003	**VB390400**	Connector Base Post	PH- 8P TE	コネクタベースポスト			01
CN005	**VB390300**	Connector Base Post	PH- 7P TE	コネクタベースポスト			01
CN006	**VE352600**	Connector Base Post	PH-14P TE	コネクタベースポスト			01
D0001	**VB941200**	Diode	1SS133,1SS176	ダイオード			01
-0005	**VB941200**	Diode	1SS133,1SS176	ダイオード			01
FT001	**IE101250**	FET	2SK105 E,F	FET			01
FT002	**IE101250**	FET	2SK105 E,F	FET			01
IC001	**XB247A00**	IC	UPC4570HA	IC	OP AMP		02
IC002	**XB247A00**	IC	UPC4570HA	IC	OP AMP		02
IC003	**XM804A00**	IC	LA6517	IC	OP AMP		04
IC004	**XB247A00**	IC	UPC4570HA	IC	OP AMP		02
IC005	**XB247A00**	IC	UPC4570HA	IC	OP AMP		02
J1	**--**	Jumper Wire	0.55	ジャンパー線	(VD04170)		
J2	**--**	Jumper Wire	0.55	ジャンパー線	(VD04170)		
R0001	**HF757220**	Carbon Resistor	22.0K 1/4 J	カーボン抵抗			01
R0002	**HF757470**	Carbon Resistor	47.0K 1/4 J	カーボン抵抗			01
R0003	**HF757220**	Carbon Resistor	22.0K 1/4 J	カーボン抵抗			01
R0004	**HF757470**	Carbon Resistor	47.0K 1/4 J	カーボン抵抗			01
R0005	**HF758560**	Carbon Resistor	560.0K 1/4 J	カーボン抵抗			01
R0006	**HF757100**	Carbon Resistor	10.0K 1/4 J	カーボン抵抗			01
R0007	**HF758100**	Carbon Resistor	100.0K 1/4 J	カーボン抵抗			01
R0008	**HF758100**	Carbon Resistor	100.0K 1/4 J	カーボン抵抗			01
R0009	**HF758560**	Carbon Resistor	560.0K 1/4 J	カーボン抵抗			01
R0010	**HF757100**	Carbon Resistor	10.0K 1/4 J	カーボン抵抗			01
R0011	**HF756470**	Carbon Resistor	4.7K 1/4 J	カーボン抵抗			01
R0012	**HF756470**	Carbon Resistor	4.7K 1/4 J	カーボン抵抗			01
R0013	**HF757330**	Carbon Resistor	33.0K 1/4 J	カーボン抵抗			01
R0014	**HF757820**	Carbon Resistor	82.0K 1/4 J	カーボン抵抗			01
R0015	**HF757100**	Carbon Resistor	10.0K 1/4 J	カーボン抵抗			01
R0016	**HF757820**	Carbon Resistor	82.0K 1/4 J	カーボン抵抗			01
R0017	**HF757820**	Carbon Resistor	82.0K 1/4 J	カーボン抵抗			01
R0018	**HF757100**	Carbon Resistor	10.0K 1/4 J	カーボン抵抗			01
R0019	**HF757820**	Carbon Resistor	82.0K 1/4 J	カーボン抵抗			01
R0020	**HF757100**	Carbon Resistor	10.0K 1/4 J	カーボン抵抗			01
R0021	**HF757330**	Carbon Resistor	33.0K 1/4 J	カーボン抵抗			01
R0022	**HF754330**	Carbon Resistor	33.0 1/4 J	カーボン抵抗			01
R0023	**HF757100**	Carbon Resistor	10.0K 1/4 J	カーボン抵抗			01
R0024	**HF757100**	Carbon Resistor	10.0K 1/4 J	カーボン抵抗			01
R0025	**HF757330**	Carbon Resistor	33.0K 1/4 J	カーボン抵抗			01
R0026	**HF754330**	Carbon Resistor	33.0 1/4 J	カーボン抵抗			01
R0027	**HF757100**	Carbon Resistor	10.0K 1/4 J	カーボン抵抗			01
R0028	**HF756100**	Carbon Resistor	1.0K 1/4 J	カーボン抵抗			01
R0029	**HF756100**	Carbon Resistor	1.0K 1/4 J	カーボン抵抗			01
R0030	**--**	Jumper Wire	0.55	ジャンパー線	(VD04170)		
R0031	**HF757270**	Carbon Resistor	27.0K 1/4 J	カーボン抵抗			01
R0032	**HF757330**	Carbon Resistor	33.0K 1/4 J	カーボン抵抗			01
R0033	**HF757100**	Carbon Resistor	10.0K 1/4 J	カーボン抵抗			01
R0034	**HF756470**	Carbon Resistor	4.7K 1/4 J	カーボン抵抗			01
R0035	**HF757100**	Carbon Resistor	10.0K 1/4 J	カーボン抵抗			01
R0036	**--**	Jumper Wire	0.55	ジャンパー線	(VD04170)		
R0037	**HF755680**	Carbon Resistor	680.0 1/4 J	カーボン抵抗			01
R0038	**HF757270**	Carbon Resistor	27.0K 1/4 J	カーボン抵抗			01
R0039	**HF757330**	Carbon Resistor	33.0K 1/4 J	カーボン抵抗			01
R0040	**HF757100**	Carbon Resistor	10.0K 1/4 J	カーボン抵抗			01
R0041	**HF755680**	Carbon Resistor	680.0 1/4 J	カーボン抵抗			01
R0042	**HF755680**	Carbon Resistor	680.0 1/4 J	カーボン抵抗			01
R0043	**HF757100**	Carbon Resistor	10.0K 1/4 J	カーボン抵抗			01
R0044	**HF757330**	Carbon Resistor	33.0K 1/4 J	カーボン抵抗			01
R0045	**HF757100**	Carbon Resistor	10.0K 1/4 J	カーボン抵抗			01
R0046	**HF756470**	Carbon Resistor	4.7K 1/4 J	カーボン抵抗			01
R0047	**HF757100**	Carbon Resistor	10.0K 1/4 J	カーボン抵抗			01
R0048	**--**	Jumper Wire	0.55	ジャンパー線	(VD04170)		
R0049	**HF755680**	Carbon Resistor	680.0 1/4 J	カーボン抵抗			01
R0050	**HF757100**	Carbon Resistor	10.0K 1/4 J	カーボン抵抗			01
R0051	**HF757330**	Carbon Resistor	33.0K 1/4 J	カーボン抵抗			01
R0052	**HF757100**	Carbon Resistor	10.0K 1/4 J	カーボン抵抗			01
RY001	**VZ057500**	Relay	DC MR82-12USR	リレー 12V			04
-003	**VZ057500**	Relay	DC MR82-12USR	リレー 12V			04

✻: New Parts

RANK: Japan only

REF NO.	PART NO.	DESCRIPTION		部品名	REMARKS	QTY	RANK
TR001	**IC174020**	Transistor	2SC1740S R,S	トランジスタ			01
-003	**IC174020**	Transistor	2SC1740S R,S	トランジスタ			01
*	**V6694300**	Circuit Board	DA	Ｄ Ａ シ ー ト	(XY836C0)		
	--	GND Wire 5		アース線５	(V696740)		
C0189	**US135100**	Ceramic Capacitor-F (chip)	0.1000 16V Z	チップセラ（Ｆ）			01
-0191	**US135100**	Ceramic Capacitor-F (chip)	0.1000 16V Z	チップセラ（Ｆ）			01
C0192	**US062100**	Ceramic Capacitor-SL(chip)	100P 50V J	チップセラ（ＳＬ）			01
C0193	**UF266470**	Electrolytic Cap.-BP (chip	4.7 50V	チップＢＰコン			02
C0194	**US062270**	Ceramic Capacitor-SL(chip)	270P 50V J	チップセラ（ＳＬ）			01
C0195	**US135100**	Ceramic Capacitor-F (chip)	0.1000 16V Z	チップセラ（Ｆ）			01
C0196	**US135100**	Ceramic Capacitor-F (chip)	0.1000 16V Z	チップセラ（Ｆ）			01
C0197	**UF037100**	Electrolytic Cap. (chip)	10 16V	チップケミコン			01
C0198	**US135100**	Ceramic Capacitor-F (chip)	0.1000 16V Z	チップセラ（Ｆ）			01
C0199	**US062270**	Ceramic Capacitor-SL(chip)	270P 50V J	チップセラ（ＳＬ）			01
C0200	**US062100**	Ceramic Capacitor-SL(chip)	100P 50V J	チップセラ（ＳＬ）			01
C0201	**US135100**	Ceramic Capacitor-F (chip)	0.1000 16V Z	チップセラ（Ｆ）			01
C0202	**UF037100**	Electrolytic Cap. (chip)	10 16V	チップケミコン			01
C0203	**US135100**	Ceramic Capacitor-F (chip)	0.1000 16V Z	チップセラ（Ｆ）			01
C0204	**UF037100**	Electrolytic Cap. (chip)	10 16V	チップケミコン			01
C0205	**UF037100**	Electrolytic Cap. (chip)	10 16V	チップケミコン			01
C0206	**US135100**	Ceramic Capacitor-F (chip)	0.1000 16V Z	チップセラ（Ｆ）			01
C0207	**US135100**	Ceramic Capacitor-F (chip)	0.1000 16V Z	チップセラ（Ｆ）			01
C0208	**US064100**	Ceramic Capacitor-B (chip)	0.0100 50V K	チップセラ（Ｂ）			01
-0211	**US064100**	Ceramic Capacitor-B (chip)	0.0100 50V K	チップセラ（Ｂ）			01
C0212	**UF037100**	Electrolytic Cap. (chip)	10 16V	チップケミコン			01
C0213	**UF046470**	Electrolytic Cap. (chip)	4.7 25V	チップケミコン			01
C0242	**US135100**	Ceramic Capacitor-F (chip)	0.1000 16V Z	チップセラ（Ｆ）			01
C0243	**UF038100**	Electrolytic Cap. (chip)	100 16V	チップケミコン			01
C0244	**US135100**	Ceramic Capacitor-F (chip)	0.1000 16V Z	チップセラ（Ｆ）			01
C0245	**US135100**	Ceramic Capacitor-F (chip)	0.1000 16V Z	チップセラ（Ｆ）			01
C0246	**UF038100**	Electrolytic Cap. (chip)	100 16V	チップケミコン			01
C0247	**US135100**	Ceramic Capacitor-F (chip)	0.1000 16V Z	チップセラ（Ｆ）			01
C0248	**UF046470**	Electrolytic Cap. (chip)	4.7 25V	チップケミコン			01
C0249	**UF046470**	Electrolytic Cap. (chip)	4.7 25V	チップケミコン			01
C0250	**US135100**	Ceramic Capacitor-F (chip)	0.1000 16V Z	チップセラ（Ｆ）			01
C0251	**UF046470**	Electrolytic Cap. (chip)	4.7 25V	チップケミコン			01
C0252	**UF037220**	Electrolytic Cap. (chip)	22 16V	チップケミコン			01
C0253	**UF038100**	Electrolytic Cap. (chip)	100 16V	チップケミコン			01
C0254	**UF038100**	Electrolytic Cap. (chip)	100 16V	チップケミコン			01
C0255	**UF046470**	Electrolytic Cap. (chip)	4.7 25V	チップケミコン			01
-0257	**UF046470**	Electrolytic Cap. (chip)	4.7 25V	チップケミコン			01
C0258	**US135100**	Ceramic Capacitor-F (chip)	0.1000 16V Z	チップセラ（Ｆ）			01
C0259	**UF046470**	Electrolytic Cap. (chip)	4.7 25V	チップケミコン			01
C0260	**UF037220**	Electrolytic Cap. (chip)	22 16V	チップケミコン			01
C0261	**UF038100**	Electrolytic Cap. (chip)	100 16V	チップケミコン			01
C0262	**UF038100**	Electrolytic Cap. (chip)	100 16V	チップケミコン			01
C0263	**UF046470**	Electrolytic Cap. (chip)	4.7 25V	チップケミコン			01
C0264	**US062680**	Ceramic Capacitor-SL(chip)	680P 50V J	チップセラ（ＳＬ）			01
C0265	**US063220**	Ceramic Capacitor-B (chip)	2200P 50V K	チップセラ（Ｂ）			01
C0266	**US063120**	Ceramic Capacitor-B (chip)	1200P 50V K	チップセラ（Ｂ）			01
C0267	**US062330**	Ceramic Capacitor-SL(chip)	330P 50V J	チップセラ（ＳＬ）			01
C0268	**UF266470**	Electrolytic Cap.-BP (chip	4.7 50V	チップＢＰコン			02
C0269	**US063220**	Ceramic Capacitor-B (chip)	2200P 50V K	チップセラ（Ｂ）			01
C0270	**US063120**	Ceramic Capacitor-B (chip)	1200P 50V K	チップセラ（Ｂ）			01
C0271	**US062330**	Ceramic Capacitor-SL(chip)	330P 50V J	チップセラ（ＳＬ）			01
C0272	**UF266470**	Electrolytic Cap.-BP (chip	4.7 50V	チップＢＰコン			02
C0273	**UF046470**	Electrolytic Cap. (chip)	4.7 25V	チップケミコン			01
C0274	**US135100**	Ceramic Capacitor-F (chip)	0.1000 16V Z	チップセラ（Ｆ）			01
-0278	**US135100**	Ceramic Capacitor-F (chip)	0.1000 16V Z	チップセラ（Ｆ）			01
C0279	**UF038100**	Electrolytic Cap. (chip)	100 16V	チップケミコン			01
C0280	**US135100**	Ceramic Capacitor-F (chip)	0.1000 16V Z	チップセラ（Ｆ）			01
C0281	**UF037100**	Electrolytic Cap. (chip)	10 16V	チップケミコン			01
C0282	**US135100**	Ceramic Capacitor-F (chip)	0.1000 16V Z	チップセラ（Ｆ）			01
C0283	**UF038100**	Electrolytic Cap. (chip)	100 16V	チップケミコン			01
C0284	**US135100**	Ceramic Capacitor-F (chip)	0.1000 16V Z	チップセラ（Ｆ）			01
C0285	**UF038100**	Electrolytic Cap. (chip)	100 16V	チップケミコン			01
C0286	**UF037100**	Electrolytic Cap. (chip)	10 16V	チップケミコン			01
C0287	**UF037100**	Electrolytic Cap. (chip)	10 16V	チップケミコン			01
C0288	**UF037100**	Electrolytic Cap. (chip)	10 16V	チップケミコン			01

※: New Parts

RANK: Japan only

REF NO.	PART NO.	DESCRIPTION		部品名	REMARKS	QTY	RANK
C0289	**US062120**	Ceramic Capacitor-SL(chip)	120P 50V J	チップセラ（SL）			01
C0290	**US063220**	Ceramic Capacitor-B (chip)	2200P 50V K	チップセラ（B）			01
C0291	**US063120**	Ceramic Capacitor-B (chip)	1200P 50V K	チップセラ（B）			01
C0292	**US062330**	Ceramic Capacitor-SL(chip)	330P 50V J	チップセラ（SL）			01
C0293	**UF266470**	Electrolytic Cap.-BP (chip	4.7 50V	チップBPコン			02
C0294	**US063220**	Ceramic Capacitor-B (chip)	2200P 50V K	チップセラ（B）			01
C0295	**US063120**	Ceramic Capacitor-B (chip)	1200P 50V K	チップセラ（B）			01
C0296	**US062330**	Ceramic Capacitor-SL(chip)	330P 50V J	チップセラ（SL）			01
C0297	**UF266470**	Electrolytic Cap.-BP (chip	4.7 50V	チップBPコン			02
C0298	**US135100**	Ceramic Capacitor-F (chip)	0.1000 16V Z	チップセラ（F）			01
-0301	**US135100**	Ceramic Capacitor-F (chip)	0.1000 16V Z	チップセラ（F）			01
C0302	**UF046470**	Electrolytic Cap. (chip)	4.7 25V	チップケミコン			01
C0303	**US135100**	Ceramic Capacitor-F (chip)	0.1000 16V Z	チップセラ（F）			01
C0304	**UF038100**	Electrolytic Cap. (chip)	100 16V	チップケミコン			01
C0305	**US135100**	Ceramic Capacitor-F (chip)	0.1000 16V Z	チップセラ（F）			01
C0306	**UF037100**	Electrolytic Cap. (chip)	10 16V	チップケミコン			01
C0307	**US135100**	Ceramic Capacitor-F (chip)	0.1000 16V Z	チップセラ（F）			01
C0308	**UF038100**	Electrolytic Cap. (chip)	100 16V	チップケミコン			01
C0309	**UF037100**	Electrolytic Cap. (chip)	10 16V	チップケミコン			01
C0310	**US135100**	Ceramic Capacitor-F (chip)	0.1000 16V Z	チップセラ（F）			01
C0311	**UF038100**	Electrolytic Cap. (chip)	100 16V	チップケミコン			01
C0312	**UF037100**	Electrolytic Cap. (chip)	10 16V	チップケミコン			01
C0313	**US062120**	Ceramic Capacitor-SL(chip)	120P 50V J	チップセラ（SL）			01
C0314	**US063220**	Ceramic Capacitor-B (chip)	2200P 50V K	チップセラ（B）			01
C0315	**US063120**	Ceramic Capacitor-B (chip)	1200P 50V K	チップセラ（B）			01
C0316	**US062330**	Ceramic Capacitor-SL(chip)	330P 50V J	チップセラ（SL）			01
C0317	**UF266470**	Electrolytic Cap.-BP (chip	4.7 50V	チップBPコン			02
C0318	**UF037100**	Electrolytic Cap. (chip)	10 16V	チップケミコン			01
C0319	**US062120**	Ceramic Capacitor-SL(chip)	120P 50V J	チップセラ（SL）			01
C0320	**US063220**	Ceramic Capacitor-B (chip)	2200P 50V K	チップセラ（B）			01
C0321	**US063120**	Ceramic Capacitor-B (chip)	1200P 50V K	チップセラ（B）			01
C0322	**US062330**	Ceramic Capacitor-SL(chip)	330P 50V J	チップセラ（SL）			01
C0323	**UF266470**	Electrolytic Cap.-BP (chip	4.7 50V	チップBPコン			02
C0324	**US064100**	Ceramic Capacitor-B (chip)	0.0100 50V K	チップセラ（B）			01
C0325	**US064100**	Ceramic Capacitor-B (chip)	0.0100 50V K	チップセラ（B）			01
C0326	**UF038100**	Electrolytic Cap. (chip)	100 16V	チップケミコン			01
C0327	**US064100**	Ceramic Capacitor-B (chip)	0.0100 50V K	チップセラ（B）			01
C0328	**UF038100**	Electrolytic Cap. (chip)	100 16V	チップケミコン			01
C0329	**US064100**	Ceramic Capacitor-B (chip)	0.0100 50V K	チップセラ（B）			01
C0330	**US135100**	Ceramic Capacitor-F (chip)	0.1000 16V Z	チップセラ（F）			01
C0331	**US064100**	Ceramic Capacitor-B (chip)	0.0100 50V K	チップセラ（B）			01
C0332	**US135100**	Ceramic Capacitor-F (chip)	0.1000 16V Z	チップセラ（F）			01
C0333	**US064100**	Ceramic Capacitor-B (chip)	0.0100 50V K	チップセラ（B）			01
C0334	**US135100**	Ceramic Capacitor-F (chip)	0.1000 16V Z	チップセラ（F）			01
C0335	**US064100**	Ceramic Capacitor-B (chip)	0.0100 50V K	チップセラ（B）			01
C0336	**US135100**	Ceramic Capacitor-F (chip)	0.1000 16V Z	チップセラ（F）			01
C0337	**US064100**	Ceramic Capacitor-B (chip)	0.0100 50V K	チップセラ（B）			01
C0339	**US062680**	Ceramic Capacitor-SL(chip)	680P 50V J	チップセラ（SL）			01
C0340	**US062120**	Ceramic Capacitor-SL(chip)	120P 50V J	チップセラ（SL）			01
C0342	**US135100**	Ceramic Capacitor-F (chip)	0.1000 16V Z	チップセラ（F）			01
-0345	**US135100**	Ceramic Capacitor-F (chip)	0.1000 16V Z	チップセラ（F）			01
C0348	**US064100**	Ceramic Capacitor-B (chip)	0.0100 50V K	チップセラ（B）			01
C0349	**US064100**	Ceramic Capacitor-B (chip)	0.0100 50V K	チップセラ（B）			01
C0350	**UF038100**	Electrolytic Cap. (chip)	100 16V	チップケミコン			01
C0351	**UF038100**	Electrolytic Cap. (chip)	100 16V	チップケミコン			01
CN006	**VB390400**	Connector Base Post	PH- 8P TE	コネクタベースポスト			01
CN008	**VB390800**	Connector Base Post	PH-12P TE	コネクタベースポスト			01
CN016	**VB390600**	Connector Base Post	PH-10P TE	コネクタベースポスト			01
CN020	**LB919030**	Base Post Connector	XH- 3P TE	ベースツキポスト			01
CN022	**--**	Connector	TX24 30P TE	基板用コネクタ	(V582240)		
D0001	**VB493900**	Diode	MA221	ダイオード			01
-0004	**VB493900**	Diode	MA221	ダイオード			01
IC044	**XF291A00**	IC	UPC4570G2	IC	OP AMP		03
IC045	**XV510A00**	IC	AK5351-VF-E2	IC	ADC		08
IC046	**XF483A00**	IC	LB1443N	IC	LED DRIVER		02
IC049	**XN086A00**	IC	NJM79L05UA	IC	REGULATOR -5V		02
IC050	**XS891A00**	IC	UPC29M05T-E1	IC	REGULATOR +5V		03
IC050	**XV492A00**	IC	UPC2905T-E1	IC			03
IC051	**XP551A00**	IC	PCM1702U/2K	IC	DAC		08
IC052	**XP551A00**	IC	PCM1702U/2K	IC	DAC		08

✻: New Parts

RANK: Japan only

	REF NO.	PART NO.	DESCRIPTION		部品名	REMARKS	QTY	RANK
	IC053	**XF291A00**	IC	UPC4570G2	IC	OP AMP		03
	IC054	**XF291A00**	IC	UPC4570G2	IC	OP AMP		03
	IC055	**XU829A00**	IC	PCM1716E	IC	DAC		06
	IC056	**XU829A00**	IC	PCM1716E	IC	DAC		06
	IC057	**XF291A00**	IC	UPC4570G2	IC	OP AMP		03
	IC058	**XF291A00**	IC	UPC4570G2	IC	OP AMP		03
	IC059	**XF291A00**	IC	UPC4570G2	IC	OP AMP		03
	IC060	**XF291A00**	IC	UPC4570G2	IC	OP AMP		03
*	L0001	**V5848100**	Chip Inductance	56U ELJFC560JF	巻線チップインダクタ			01
*	L0013	**V5848100**	Chip Inductance	56U ELJFC560JF	巻線チップインダクタ			01
*	-0027	**V5848100**	Chip Inductance	56U ELJFC560JF	巻線チップインダクタ			01
	L0028	**VT872900**	Chip Inductance	0.22U LEM2520TR22K	チップインダクタ			01
	L0030	**VT872900**	Chip Inductance	0.22U LEM2520TR22K	チップインダクタ			01
	L0034	**VT872900**	Chip Inductance	0.22U LEM2520TR22K	チップインダクタ			01
	L0035	**VT872900**	Chip Inductance	0.22U LEM2520TR22K	チップインダクタ			01
*	L0036	**V5848100**	Chip Inductance	56U ELJFC560JF	巻線チップインダクタ			01
*	-0039	**V5848100**	Chip Inductance	56U ELJFC560JF	巻線チップインダクタ			01
	L0043	**VT872900**	Chip Inductance	0.22U LEM2520TR22K	チップインダクタ			01
	L0044	**VT872900**	Chip Inductance	0.22U LEM2520TR22K	チップインダクタ			01
*	L0046	**V5848100**	Chip Inductance	56U ELJFC560JF	巻線チップインダクタ			01
*	-0049	**V5848100**	Chip Inductance	56U ELJFC560JF	巻線チップインダクタ			01
	R0269	**RD357100**	Carbon Resistor (chip)	10K 63M J	チップ抵抗			01
	R0270	**RD357100**	Carbon Resistor (chip)	10K 63M J	チップ抵抗			01
	R0271	**RD356470**	Carbon Resistor (chip)	4.7K 63M J	チップ抵抗			01
	R0272	**RD356470**	Carbon Resistor (chip)	4.7K 63M J	チップ抵抗			01
	R0273	**RD357100**	Carbon Resistor (chip)	10K 63M J	チップ抵抗			01
	R0274	**RD357100**	Carbon Resistor (chip)	10K 63M J	チップ抵抗			01
	R0275	**RD355330**	Carbon Resistor (chip)	330 63M J	チップ抵抗			01
	R0276	**RD355330**	Carbon Resistor (chip)	330 63M J	チップ抵抗			01
	R0277	**RD354680**	Carbon Resistor (chip)	68 63M J	チップ抵抗			01
	R0278	**RD355100**	Carbon Resistor (chip)	100 63M J	チップ抵抗			01
	R0279	**RD355470**	Carbon Resistor (chip)	470 63M J	チップ抵抗			01
	-0281	**RD355470**	Carbon Resistor (chip)	470 63M J	チップ抵抗			01
	R0282	**RD355470**	Carbon Resistor (chip)	470 63M J	チップ抵抗			01
	R0283	**RD357100**	Carbon Resistor (chip)	10K 63M J	チップ抵抗			01
	R0284	**RD357100**	Carbon Resistor (chip)	10K 63M J	チップ抵抗			01
	R0285	**RD356560**	Carbon Resistor (chip)	5.6K 63M J	チップ抵抗			01
	R0320	**RD356270**	Carbon Resistor (chip)	2.7K 63M J	チップ抵抗			01
	R0321	**RD356270**	Carbon Resistor (chip)	2.7K 63M J	チップ抵抗			01
	R0322	**RD356220**	Carbon Resistor (chip)	2.2K 63M J	チップ抵抗			01
	R0323	**RD357100**	Carbon Resistor (chip)	10K 63M J	チップ抵抗			01
	R0324	**RD357100**	Carbon Resistor (chip)	10K 63M J	チップ抵抗			01
	R0325	**RD355100**	Carbon Resistor (chip)	100 63M J	チップ抵抗			01
	R0326	**RD356220**	Carbon Resistor (chip)	2.2K 63M J	チップ抵抗			01
	R0327	**RD357100**	Carbon Resistor (chip)	10K 63M J	チップ抵抗			01
	R0328	**RD357100**	Carbon Resistor (chip)	10K 63M J	チップ抵抗			01
	R0329	**RD355100**	Carbon Resistor (chip)	100 63M J	チップ抵抗			01
	R0330	**RD356270**	Carbon Resistor (chip)	2.7K 63M J	チップ抵抗			01
	R0331	**RD357150**	Carbon Resistor (chip)	15K 63M J	チップ抵抗			01
	R0332	**RD356220**	Carbon Resistor (chip)	2.2K 63M J	チップ抵抗			01
	R0333	**RD357100**	Carbon Resistor (chip)	10K 63M J	チップ抵抗			01
	R0334	**RD357100**	Carbon Resistor (chip)	10K 63M J	チップ抵抗			01
	R0335	**RD355100**	Carbon Resistor (chip)	100 63M J	チップ抵抗			01
	R0336	**RD356270**	Carbon Resistor (chip)	2.7K 63M J	チップ抵抗			01
	R0337	**RD357150**	Carbon Resistor (chip)	15K 63M J	チップ抵抗			01
	R0338	**RD356220**	Carbon Resistor (chip)	2.2K 63M J	チップ抵抗			01
	R0339	**RD357100**	Carbon Resistor (chip)	10K 63M J	チップ抵抗			01
	R0340	**RD357100**	Carbon Resistor (chip)	10K 63M J	チップ抵抗			01
	R0341	**RD355100**	Carbon Resistor (chip)	100 63M J	チップ抵抗			01
	R0342	**RD356270**	Carbon Resistor (chip)	2.7K 63M J	チップ抵抗			01
	R0343	**RD357150**	Carbon Resistor (chip)	15K 63M J	チップ抵抗			01
	R0344	**RD356220**	Carbon Resistor (chip)	2.2K 63M J	チップ抵抗			01
	R0345	**RD357100**	Carbon Resistor (chip)	10K 63M J	チップ抵抗			01
	R0346	**RD357100**	Carbon Resistor (chip)	10K 63M J	チップ抵抗			01
	R0347	**RD355100**	Carbon Resistor (chip)	100 63M J	チップ抵抗			01
	R0348	**RD356270**	Carbon Resistor (chip)	2.7K 63M J	チップ抵抗			01
	R0349	**RD357150**	Carbon Resistor (chip)	15K 63M J	チップ抵抗			01
	R0350	**RD356220**	Carbon Resistor (chip)	2.2K 63M J	チップ抵抗			01
	R0351	**RD357100**	Carbon Resistor (chip)	10K 63M J	チップ抵抗			01
	R0352	**RD357100**	Carbon Resistor (chip)	10K 63M J	チップ抵抗			01

※: New Parts

RANK: Japan only

	REF NO.	PART NO.	DESCRIPTION		部品名	REMARKS	QTY	RANK
	R0353	**RD355100**	Carbon Resistor (chip)	100 63M J	チップ抵抗			01
	R0354	**RD358470**	Carbon Resistor (chip)	470K 63M J	チップ抵抗			01
	R0355	**RD358470**	Carbon Resistor (chip)	470K 63M J	チップ抵抗			01
	R0370	**RD358470**	Carbon Resistor (chip)	470K 63M J	チップ抵抗			01
	-0382	**RD358470**	Carbon Resistor (chip)	470K 63M J	チップ抵抗			01
*		**V5790500**	Circuit Board	DM	DMシート	(XY733C0)		
		VK863100	IC Socket	DICF-42CS-E	ICソケット			03
	C0001	**UF018100**	Electrolytic Cap. (chip)	100 6.3V	チップケミコン			01
	C0002	**US064100**	Ceramic Capacitor-B (chip)	0.0100 50V K	チップセラ（B）			01
	C0003	**US135100**	Ceramic Capacitor-F (chip)	0.1000 16V Z	チップセラ（F）			01
	C0004	**US062100**	Ceramic Capacitor-SL(chip)	100P 50V J	チップセラ（SL）			01
	C0005	**US064100**	Ceramic Capacitor-B (chip)	0.0100 50V K	チップセラ（B）			01
	-0010	**US064100**	Ceramic Capacitor-B (chip)	0.0100 50V K	チップセラ（B）			01
	C0011	**US061270**	Ceramic Capacitor-CH(chip)	27P 50V J	チップセラ（CH）			01
	C0012	**US061270**	Ceramic Capacitor-CH(chip)	27P 50V J	チップセラ（CH）			01
	C0013	**US062470**	Ceramic Capacitor-SL(chip)	470P 50V J	チップセラ（SL）			01
	C0014	**US135100**	Ceramic Capacitor-F (chip)	0.1000 16V Z	チップセラ（F）			01
	C0015	**US064100**	Ceramic Capacitor-B (chip)	0.0100 50V K	チップセラ（B）			01
	-0018	**US064100**	Ceramic Capacitor-B (chip)	0.0100 50V K	チップセラ（B）			01
	C0019	**US135100**	Ceramic Capacitor-F (chip)	0.1000 16V Z	チップセラ（F）			01
	-0023	**US135100**	Ceramic Capacitor-F (chip)	0.1000 16V Z	チップセラ（F）			01
	C0024	**US064100**	Ceramic Capacitor-B (chip)	0.0100 50V K	チップセラ（B）			01
	-0029	**US064100**	Ceramic Capacitor-B (chip)	0.0100 50V K	チップセラ（B）			01
	C0030	**US062100**	Ceramic Capacitor-SL(chip)	100P 50V J	チップセラ（SL）			01
	C0031	**US064100**	Ceramic Capacitor-B (chip)	0.0100 50V K	チップセラ（B）			01
	-0051	**US064100**	Ceramic Capacitor-B (chip)	0.0100 50V K	チップセラ（B）			01
	C0052	**UF018100**	Electrolytic Cap. (chip)	100 6.3V	チップケミコン			01
	C0053	**US064100**	Ceramic Capacitor-B (chip)	0.0100 50V K	チップセラ（B）			01
	-0056	**US064100**	Ceramic Capacitor-B (chip)	0.0100 50V K	チップセラ（B）			01
	C0057	**US061220**	Ceramic Capacitor-CH(chip)	22P 50V J	チップセラ（CH）			01
	C0058	**US061220**	Ceramic Capacitor-CH(chip)	22P 50V J	チップセラ（CH）			01
	C0059	**US062100**	Ceramic Capacitor-SL(chip)	100P 50V J	チップセラ（SL）			01
	C0060	**US062100**	Ceramic Capacitor-SL(chip)	100P 50V J	チップセラ（SL）			01
	C0061	**US064100**	Ceramic Capacitor-B (chip)	0.0100 50V K	チップセラ（B）			01
	C0062	**US062100**	Ceramic Capacitor-SL(chip)	100P 50V J	チップセラ（SL）			01
	C0063	**US064100**	Ceramic Capacitor-B (chip)	0.0100 50V K	チップセラ（B）			01
	C0064	**US135100**	Ceramic Capacitor-F (chip)	0.1000 16V Z	チップセラ（F）			01
	C0065	**US062100**	Ceramic Capacitor-SL(chip)	100P 50V J	チップセラ（SL）			01
	-0069	**US062100**	Ceramic Capacitor-SL(chip)	100P 50V J	チップセラ（SL）			01
	C0070	**UF018100**	Electrolytic Cap. (chip)	100 6.3V	チップケミコン			01
	C0071	**US064100**	Ceramic Capacitor-B (chip)	0.0100 50V K	チップセラ（B）			01
	-0093	**US064100**	Ceramic Capacitor-B (chip)	0.0100 50V K	チップセラ（B）			01
	C0094	**UF018100**	Electrolytic Cap. (chip)	100 6.3V	チップケミコン			01
	C0095	**US064100**	Ceramic Capacitor-B (chip)	0.0100 50V K	チップセラ（B）			01
	-0099	**US064100**	Ceramic Capacitor-B (chip)	0.0100 50V K	チップセラ（B）			01
	C0100	**US060500**	Ceramic Capacitor-CH(chip)	5P 50V C	チップセラ（CH）			01
	C0101	**US060500**	Ceramic Capacitor-CH(chip)	5P 50V C	チップセラ（CH）			01
	C0102	**US062100**	Ceramic Capacitor-SL(chip)	100P 50V J	チップセラ（SL）			01
	C0103	**US064100**	Ceramic Capacitor-B (chip)	0.0100 50V K	チップセラ（B）			01
	C0104	**UF018100**	Electrolytic Cap. (chip)	100 6.3V	チップケミコン			01
	C0105	**US064100**	Ceramic Capacitor-B (chip)	0.0100 50V K	チップセラ（B）			01
	C0106	**US064100**	Ceramic Capacitor-B (chip)	0.0100 50V K	チップセラ（B）			01
	C0107	**UF018100**	Electrolytic Cap. (chip)	100 6.3V	チップケミコン			01
	C0108	**US064100**	Ceramic Capacitor-B (chip)	0.0100 50V K	チップセラ（B）			01
	C0109	**UF018100**	Electrolytic Cap. (chip)	100 6.3V	チップケミコン			01
	C0110	**US064100**	Ceramic Capacitor-B (chip)	0.0100 50V K	チップセラ（B）			01
	-0113	**US064100**	Ceramic Capacitor-B (chip)	0.0100 50V K	チップセラ（B）			01
	C0114	**UF018100**	Electrolytic Cap. (chip)	100 6.3V	チップケミコン			01
	C0115	**US064100**	Ceramic Capacitor-B (chip)	0.0100 50V K	チップセラ（B）			01
	-0123	**US064100**	Ceramic Capacitor-B (chip)	0.0100 50V K	チップセラ（B）			01
	C0124	**UF066100**	Electrolytic Cap. (chip)	1 50V	チップケミコン			01
	C0125	**US064100**	Ceramic Capacitor-B (chip)	0.0100 50V K	チップセラ（B）			01
	-0130	**US064100**	Ceramic Capacitor-B (chip)	0.0100 50V K	チップセラ（B）			01
	C0131	**UF018100**	Electrolytic Cap. (chip)	100 6.3V	チップケミコン			01
	C0132	**US060500**	Ceramic Capacitor-CH(chip)	5P 50V C	チップセラ（CH）			01
	C0133	**US060500**	Ceramic Capacitor-CH(chip)	5P 50V C	チップセラ（CH）			01
	C0134	**US064100**	Ceramic Capacitor-B (chip)	0.0100 50V K	チップセラ（B）			01
	-0137	**US064100**	Ceramic Capacitor-B (chip)	0.0100 50V K	チップセラ（B）			01
	C0138	**UF118220**	Electrolytic Cap. (chip)	220 6.3V UUR0J2	チップケミコン			01

*: New Parts

RANK: Japan only

REF NO.	PART NO.	DESCRIPTION		部品名	REMARKS	QTY	RANK
C0139	**US062470**	Ceramic Capacitor-SL(chip)	470P 50V J	チップセラ（ＳＬ）			01
C0140	**US064100**	Ceramic Capacitor-B (chip)	0.0100 50V K	チップセラ（Ｂ）			01
C0141	**US061100**	Ceramic Capacitor-CH(chip)	10P 50V D	チップセラ（ＣＨ）			01
C0142	**US061100**	Ceramic Capacitor-CH(chip)	10P 50V D	チップセラ（ＣＨ）			01
C0143	**US064100**	Ceramic Capacitor-B (chip)	0.0100 50V K	チップセラ（Ｂ）			01
-0147	**US064100**	Ceramic Capacitor-B (chip)	0.0100 50V K	チップセラ（Ｂ）			01
C0148	**UF018100**	Electrolytic Cap. (chip)	100 6.3V	チップケミコン			01
C0149	**US064100**	Ceramic Capacitor-B (chip)	0.0100 50V K	チップセラ（Ｂ）			01
-0151	**US064100**	Ceramic Capacitor-B (chip)	0.0100 50V K	チップセラ（Ｂ）			01
C0152	**UF018100**	Electrolytic Cap. (chip)	100 6.3V	チップケミコン			01
C0153	**US061150**	Ceramic Capacitor-CH(chip)	15P 50V J	チップセラ（ＣＨ）			01
C0154	**US061150**	Ceramic Capacitor-CH(chip)	15P 50V J	チップセラ（ＣＨ）			01
C0155	**US061180**	Ceramic Capacitor-CH(chip)	18P 50V J	チップセラ（ＣＨ）			01
C0156	**US061180**	Ceramic Capacitor-CH(chip)	18P 50V J	チップセラ（ＣＨ）			01
C0157	**US064100**	Ceramic Capacitor-B (chip)	0.0100 50V K	チップセラ（Ｂ）			01
C0158	**US064100**	Ceramic Capacitor-B (chip)	0.0100 50V K	チップセラ（Ｂ）			01
C0159	**US061270**	Ceramic Capacitor-CH(chip)	27P 50V J	チップセラ（ＣＨ）			01
C0160	**US061470**	Ceramic Capacitor-CH(chip)	47P 50V J	チップセラ（ＣＨ）			01
-0162	**US061470**	Ceramic Capacitor-CH(chip)	47P 50V J	チップセラ（ＣＨ）			01
C0163	**US135100**	Ceramic Capacitor-F (chip)	0.1000 16V Z	チップセラ（Ｆ）			01
-0166	**US135100**	Ceramic Capacitor-F (chip)	0.1000 16V Z	チップセラ（Ｆ）			01
C0167	**UF118220**	Electrolytic Cap. (chip)	220 6.3V UUR0J2	チップケミコン			01
C0168	**US135100**	Ceramic Capacitor-F (chip)	0.1000 16V Z	チップセラ（Ｆ）			01
C0169	**UF118220**	Electrolytic Cap. (chip)	220 6.3V UUR0J2	チップケミコン			01
C0170	**US135100**	Ceramic Capacitor-F (chip)	0.1000 16V Z	チップセラ（Ｆ）			01
C0171	**US060500**	Ceramic Capacitor-CH(chip)	5P 50V C	チップセラ（ＣＨ）			01
C0172	**US061470**	Ceramic Capacitor-CH(chip)	47P 50V J	チップセラ（ＣＨ）			01
C0173	**US135100**	Ceramic Capacitor-F (chip)	0.1000 16V Z	チップセラ（Ｆ）			01
C0174	**UF118220**	Electrolytic Cap. (chip)	220 6.3V UUR0J2	チップケミコン			01
C0175	**US135100**	Ceramic Capacitor-F (chip)	0.1000 16V Z	チップセラ（Ｆ）			01
C0176	**UF037220**	Electrolytic Cap. (chip)	22 16V	チップケミコン			01
C0177	**US061680**	Ceramic Capacitor-SL(chip)	68P 50V J	チップセラ（ＳＬ）			01
C0178	**UF118470**	Electrolytic Cap. (chip)	470 6.3V UUR0J4	チップケミコン			01
C0179	**US135100**	Ceramic Capacitor-F (chip)	0.1000 16V Z	チップセラ（Ｆ）			01
-0184	**US135100**	Ceramic Capacitor-F (chip)	0.1000 16V Z	チップセラ（Ｆ）			01
C0185	**US064100**	Ceramic Capacitor-B (chip)	0.0100 50V K	チップセラ（Ｂ）			01
C0186	**US064100**	Ceramic Capacitor-B (chip)	0.0100 50V K	チップセラ（Ｂ）			01
C0187	**US062470**	Ceramic Capacitor-SL(chip)	470P 50V J	チップセラ（ＳＬ）			01
C0188	**UF066330**	Electrolytic Cap. (chip)	3.3 50V	チップケミコン			01
C0189	**US064100**	Ceramic Capacitor-B (chip)	0.0100 50V K	チップセラ（Ｂ）			01
-0192	**US064100**	Ceramic Capacitor-B (chip)	0.0100 50V K	チップセラ（Ｂ）			01
C0193	**US061270**	Ceramic Capacitor-CH(chip)	27P 50V J	チップセラ（ＣＨ）			01
C0194	**US061270**	Ceramic Capacitor-CH(chip)	27P 50V J	チップセラ（ＣＨ）			01
C0195	**US064100**	Ceramic Capacitor-B (chip)	0.0100 50V K	チップセラ（Ｂ）			01
C0196	**US064100**	Ceramic Capacitor-B (chip)	0.0100 50V K	チップセラ（Ｂ）			01
C0197	**UF028100**	Electrolytic Cap. (chip)	100 10V	チップケミコン			01
C0198	**US064100**	Ceramic Capacitor-B (chip)	0.0100 50V K	チップセラ（Ｂ）			01
-0201	**US064100**	Ceramic Capacitor-B (chip)	0.0100 50V K	チップセラ（Ｂ）			01
C0202	**US061470**	Ceramic Capacitor-CH(chip)	47P 50V J	チップセラ（ＣＨ）			01
-0213	**US061470**	Ceramic Capacitor-CH(chip)	47P 50V J	チップセラ（ＣＨ）			01
C0214	**UF038100**	Electrolytic Cap. (chip)	100 16V	チップケミコン			01
C0215	**UF038100**	Electrolytic Cap. (chip)	100 16V	チップケミコン			01
C0216	**US064100**	Ceramic Capacitor-B (chip)	0.0100 50V K	チップセラ（Ｂ）			01
C0217	**US063100**	Ceramic Capacitor-B (chip)	1000P 50V K	チップセラ（Ｂ）			01
C0218	**US064100**	Ceramic Capacitor-B (chip)	0.0100 50V K	チップセラ（Ｂ）			01
-0224	**US064100**	Ceramic Capacitor-B (chip)	0.0100 50V K	チップセラ（Ｂ）			01
C0225	**US062100**	Ceramic Capacitor-SL(chip)	100P 50V J	チップセラ（ＳＬ）			01
CN001	**VB390000**	Connector Base Post	PH- 4P TE	コネクタベースポスト			01
CN002	**VB390100**	Connector Base Post	PH- 5P TE	コネクタベースポスト			01
CN003	**VB389800**	Connector Base Post	PH- 2P TE	コネクタベースポスト			01
CN004	**VB390500**	Connector Base Post	PH- 9P TE	コネクタベースポスト			03
CN005	**VB390400**	Connector Base Post	PH- 8P TE	コネクタベースポスト			01
CN006	**VL536600**	Connector Header	HIF3FC-50PA2.54DSA	コネクタヘッダー			03
CN007	**--**	Connector	TX25 100P SE	基板用コネクタ	(V570390)		
CN008	**VB390100**	Connector Base Post	PH- 5P TE	コネクタベースポスト			01
CN009	**VK270200**	Straight Header	HIF3FC30PA-2.54DSA	ストレートヘッダー			04
CN010	**VH343800**	Connector Header	HIF3FC-34PA2.54DSA	コネクタヘッダー			03
CN011	**VT321500**	Pin Header	A3E 44P TE	ピンヘッダー			04
CN012	**VB389800**	Connector Base Post	PH- 2P TE	コネクタベースポスト			01
CN013	**VV878100**	Connector Base Post	DF13-14P-1.25DSA	コネクタベースポスト			04

※: New Parts

RANK: Japan only

	REF NO.	PART NO.	DESCRIPTION		部品名	REMARKS	QTY	RANK
	CN014	**VB389900**	Connector Base Post	PH- 3P TE	コネクタベースポスト			01
	CN015	**VB390000**	Connector Base Post	PH- 4P TE	コネクタベースポスト			01
	D0001	**VB493900**	Diode	MA221	ダイオード			01
	D0002	**VE243700**	Diode	RB100A T-32	ダイオード			01
	D0003	**VB493900**	Diode	MA221	ダイオード			01
	-0009	**VB493900**	Diode	MA221	ダイオード			01
	EM001	**FZ006970**	LC Filter	LS MT Y223NB	LCフィルターEMI			02
	EM002	**FZ006970**	LC Filter	LS MT Y223NB	LCフィルターEMI			02
	IC001	**XW795A00**	IC	HD6437043AE00F	IC	CPU (MAIN)		11
	IC002	**XP226A00**	IC	IC-PST591DMT	IC	SYSTEM RESET		03
	IC003	**XM332A00**	IC	TC74VHC04F	IC	INVERTER		01
	IC003	**XY871A00**	IC	74VHC04SJX	IC			
	IC004	**XT014A00**	IC	TC74VHC08F	IC	AND		01
	IC004	**XY872A00**	IC	74VHC08SJX	IC			
*	IC005	**XY807B00**	IC	TE28F160S5-70	IC	FLASH ROM 16M LOW		13
*	IC006	**XY808B00**	IC	TE28F160S5-70	IC	FLASH ROM 16M HIGH		13
	IC007	**XV932A00**	IC	MSM5118160D-60J	IC	DRAM 16M		12
	IC007	**XY072A00**	IC	VG2618160CJ-6-EL10	IC			12
*	IC007	**XY931A00**	IC	IS41C16105-50K	IC			08
	IC008	**XV932A00**	IC	MSM5118160D-60J	IC	DRAM 16M		12
	IC008	**XY072A00**	IC	VG2618160CJ-6-EL10	IC			12
*	IC008	**XY931A00**	IC	IS41C16105-50K	IC			08
	IC009	**XT487A00**	IC	TC74VHC245F	IC	TRANSCEIVER		03
	-0015	**XT487A00**	IC	TC74VHC245F	IC			03
	IC009	**XY874A00**	IC	74VHC245SJX	IC			
	-0015	**XY874A00**	IC	74VHC245SJX	IC			
	IC016	**XT812A00**	IC	TC74VHC11F(EL)	IC	AND		01
	IC017	**XT487A00**	IC	TC74VHC245F	IC	TRANSCEIVER		03
	IC017	**XY874A00**	IC	74VHC245SJX	IC			
	IC018	**XY306A00**	IC	74VHC32SJX	IC	OR		01
	IC018	**XY537A00**	IC	TC74VHC32F(EL)	IC			01
	IC019	**XV833A00**	IC	MBCG46183-129	IC	SIO4 GATE ARRAY		06
	IC020	**XV833A00**	IC	MBCG46183-129	IC	SIO4 GATE ARRAY		06
	IC021	**XW875A00**	IC	TC74VHC74F-EL	IC	D-FF		01
	IC021	**XY875A00**	IC	74VHC74SJX	IC			
	IC022	**XY306A00**	IC	74VHC32SJX	IC	OR		01
	IC022	**XY537A00**	IC	TC74VHC32F(EL)	IC			01
	IC023	**XS963A00**	IC	HD74LVC138FP	IC	DECODER		02
	IC023	**XT015A00**	IC	TC74VHC138F	IC			02
	IC023	**XY873A00**	IC	74VHC138SJX	IC			01
	IC024	**XS963A00**	IC	HD74LVC138FP	IC	DECODER		02
	IC024	**XT015A00**	IC	TC74VHC138F	IC			02
	IC024	**XY873A00**	IC	74VHC138SJX	IC			01
	IC025	**XS048A00**	IC	HD74LVC139FPEL	IC	DECODER		03
*	IC025	**XW324A00**	IC	TC74VHC139F(EL)	IC			01
*	IC025	**XY960A00**	IC	74VHC139SJX	IC			
	IC026	**XW250A00**	IC	28F160S5	IC	FLASH ROM 16M		21
*	IC027	**XZ410A00**	IC	28F80085	IC	FLASH ROM 8M DATA2 LOW		10
*	IC028	**XZ411A00**	IC	28F80085	IC	FLASH ROM 8M DATA2 HIGH		10
*	IC029	**XY809B00**	IC	28F160S5	IC	FLASH ROM 16M STYLE1		13
*	IC030	**XY812100**	IC		IC	MASK ROM 16M STYLE2		07
	IC031	**XY625A00**	IC	SPC7214F0B	IC	SCSI CONTROL		08
	IC032	**XS516A00**	IC	UPC2933T-E1	IC	REGULATOR +3.3V		03
	IC033	**XN028A00**	IC	MC34268DTRK	IC	REGULATOR SCSI		04
	IC034	**XT475A00**	IC	TC74VHC157F(EL)	IC	DATA SELECTOR		02
	IC034	**XY870A00**	IC	74VHC157SJX	IC			
	IC035	**XT475A00**	IC	TC74VHC157F(EL)	IC	DATA SELECTOR		02
	IC035	**XY870A00**	IC	74VHC157SJX	IC			
	IC036	**XS720A00**	IC	TC74HC245AF	IC	TRANSCEIVER		03
	IC036	**XW107A00**	IC	MM74HC245ASJX	IC			03
	IC037	**XM234A00**	IC	HD63B01Y0RCE0F	IC	PKS		08
	IC038	**XT487A00**	IC	TC74VHC245F	IC	TRANSCEIVER		03
	IC038	**XY874A00**	IC	74VHC245SJX	IC			
	IC039	**XI939A00**	IC	HD63266F	IC	FDC		09
	IC040	**XT487A00**	IC	TC74VHC245F	IC	TRANSCEIVER		03
	IC040	**XY874A00**	IC	74VHC245SJX	IC			
	IC041	**XT487A00**	IC	TC74VHC245F	IC	TRANSCEIVER		03
	IC041	**XY874A00**	IC	74VHC245SJX	IC			
	IC042	**XS720A00**	IC	TC74HC245AF	IC	TRANSCEIVER		03
	IC042	**XW107A00**	IC	MM74HC245ASJX	IC			03

*: New Parts

RANK: Japan only

	REF NO.	PART NO.	DESCRIPTION		部品名	REMARKS	QTY	RANK
	IC043	**XM332A00**	IC	TC74VHC04F	IC	INVERTER		01
	IC043	**XY871A00**	IC	74VHC04SJX	IC			
	IC044	**XQ595A00**	IC	SED1335F0B	IC	LCDC		08
	IC045	**XV411A00**	IC	W24258S-70LE-EL10	IC	SRAM 256K		07
	IC045	**XW433A00**	IC	CY62256LL-70SNCT	IC			05
	IC046	**XV481B00**	IC	JG760082A	IC	GATE ARRAY VIDEO OUT		07
	IC047	**XV378B00**	IC	LP621024DM-70LLQ	IC	SRAM 1M		07
*	IC047	**XV625A00**	IC	CY62128LL-70SCT	IC			07
	IC048	**XN431A00**	IC	CXA1645M-T6	IC	RGB ENCORDER		06
	IC049	**XW314A00**	IC	TC74VHC174F(EL)	IC	D-FF		02
	IC050	**XV513A00**	IC	MSM82C51A-2GS-KR1	IC	USART		06
	IC051	**XD598A00**	IC	TC74HCU04AFEL	IC	INVERTER		01
	IC051	**XW842A00**	IC	SN74HCU04NSR	IC			01
	IC051	**XY070A00**	IC	MM74HCU04SJX	IC			01
	IC052	**XW313A00**	IC	TC74VHC125F	IC	BUFFER		02
*	IC052	**XY959A00**	IC	74VHC125SJX	IC			
	IC053	**XY306A00**	IC	74VHC32SJX	IC	OR		01
	IC053	**XY537A00**	IC	TC74VHC32F(EL)	IC			01
	IC054	**XD598A00**	IC	TC74HCU04AFEL	IC	INVERTER		01
	IC054	**XW842A00**	IC	SN74HCU04NSR	IC			01
	IC054	**XY070A00**	IC	MM74HCU04SJX	IC			01
	IC055	**XF291A00**	IC	UPC4570G2	IC	OP AMP		03
	IC056	**XV932A00**	IC	MSM5118160D-60J	IC	DRAM 16M		12
	IC056	**XY072A00**	IC	VG2618160CJ-6-EL10	IC			12
*	IC056	**XY931A00**	IC	IS41C16105-50K	IC			08
	IC057	**XV932A00**	IC	MSM5118160D-60J	IC	DRAM 16M		12
	IC057	**XY072A00**	IC	VG2618160CJ-6-EL10	IC			12
*	IC057	**XY931A00**	IC	IS41C16105-50K	IC			08
	IC058	**XY306A00**	IC	74VHC32SJX	IC	OR		01
	IC058	**XY537A00**	IC	TC74VHC32F(EL)	IC			01
	IC059	**XM332A00**	IC	TC74VHC04F	IC	INVERTER		01
	IC059	**XY871A00**	IC	74VHC04SJX	IC			
	IC060	**XW875A00**	IC	TC74VHC74F-EL	IC	D-FF		01
	IC060	**XY875A00**	IC	74VHC74SJX	IC			
*	L0001	**V5848100**	Chip Inductance	56U ELJFC560JF	巻線チップインダクタ			01
*	-0014	**V5848100**	Chip Inductance	56U ELJFC560JF	巻線チップインダクタ			01
	L0015	**VT872900**	Chip Inductance	0.22U LEM2520TR22K	チップインダクタ			01
*	L0016	**V5848100**	Chip Inductance	56U ELJFC560JF	巻線チップインダクタ			01
	L0017	**VT872900**	Chip Inductance	0.22U LEM2520TR22K	チップインダクタ			01
*	L0018	**V5848100**	Chip Inductance	56U ELJFC560JF	巻線チップインダクタ			01
*	-0065	**V5848100**	Chip Inductance	56U ELJFC560JF	巻線チップインダクタ			01
	L0066	**VT872900**	Chip Inductance	0.22U LEM2520TR22K	チップインダクタ			01
*	L0067	**V5848100**	Chip Inductance	56U ELJFC560JF	巻線チップインダクタ			01
*	L0068	**V5848100**	Chip Inductance	56U ELJFC560JF	巻線チップインダクタ			01
	L0069	**VT872900**	Chip Inductance	0.22U LEM2520TR22K	チップインダクタ			01
	R0001	**RD357100**	Carbon Resistor (chip)	10K 63M J	チップ抵抗			01
	R0002	**RD357100**	Carbon Resistor (chip)	10K 63M J	チップ抵抗			01
	R0003	**RD358100**	Carbon Resistor (chip)	100K 63M J	チップ抵抗			01
	-0010	**RD358100**	Carbon Resistor (chip)	100K 63M J	チップ抵抗			01
	R0011	**RD357100**	Carbon Resistor (chip)	10K 63M J	チップ抵抗			01
	-0014	**RD357100**	Carbon Resistor (chip)	10K 63M J	チップ抵抗			01
	R0015	**RD358100**	Carbon Resistor (chip)	100K 63M J	チップ抵抗			01
	-0018	**RD358100**	Carbon Resistor (chip)	100K 63M J	チップ抵抗			01
	R0019	**RD357100**	Carbon Resistor (chip)	10K 63M J	チップ抵抗			01
	R0020	**RD357100**	Carbon Resistor (chip)	10K 63M J	チップ抵抗			01
	R0021	**RD355680**	Carbon Resistor (chip)	680 63M J	チップ抵抗			01
	R0022	**RD356330**	Carbon Resistor (chip)	3.3K 63M J	チップ抵抗			01
	R0023	**RD355220**	Carbon Resistor (chip)	220 63M J	チップ抵抗			01
	R0024	**RD357100**	Carbon Resistor (chip)	10K 63M J	チップ抵抗			01
	-0029	**RD357100**	Carbon Resistor (chip)	10K 63M J	チップ抵抗			01
	R0030	**RD359100**	Carbon Resistor (chip)	1.0M 63M J	チップ抵抗			01
	R0031	**RD359100**	Carbon Resistor (chip)	1.0M 63M J	チップ抵抗			01
	R0032	**RD358470**	Carbon Resistor (chip)	470K 63M J	チップ抵抗			01
	R0033	**RD358100**	Carbon Resistor (chip)	100K 63M J	チップ抵抗			01
	R0035	**RD358100**	Carbon Resistor (chip)	100K 63M J	チップ抵抗			01
	R0036	**RD355220**	Carbon Resistor (chip)	220 63M J	チップ抵抗			01
	-0039	**RD355220**	Carbon Resistor (chip)	220 63M J	チップ抵抗			01
	R0040	**RD358470**	Carbon Resistor (chip)	470K 63M J	チップ抵抗			01
	-0044	**RD358470**	Carbon Resistor (chip)	470K 63M J	チップ抵抗			01
	R0045	**RD358100**	Carbon Resistor (chip)	100K 63M J	チップ抵抗			01
	R0046	**RD358100**	Carbon Resistor (chip)	100K 63M J	チップ抵抗			01
	R0047	**RD357100**	Carbon Resistor (chip)	10K 63M J	チップ抵抗			01
	R0048	**RD355100**	Carbon Resistor (chip)	100 63M J	チップ抵抗			01

*: New Parts

RANK: Japan only

REF NO.	PART NO.	DESCRIPTION		部品名	REMARKS	QTY	RANK
-0051	**RD355100**	Carbon Resistor (chip)	100 63M J	チップ抵抗			01
R0052	**RD357100**	Carbon Resistor (chip)	10K 63M J	チップ抵抗			01
-0055	**RD357100**	Carbon Resistor (chip)	10K 63M J	チップ抵抗			01
R0056	**RD354100**	Carbon Resistor (chip)	10 63M J	チップ抵抗			01
-0108	**RD354100**	Carbon Resistor (chip)	10 63M J	チップ抵抗			01
R0109	**RD357100**	Carbon Resistor (chip)	10K 63M J	チップ抵抗			01
-0145	**RD357100**	Carbon Resistor (chip)	10K 63M J	チップ抵抗			01
R0146	**RD354470**	Carbon Resistor (chip)	47 63M J	チップ抵抗			01
-0153	**RD354470**	Carbon Resistor (chip)	47 63M J	チップ抵抗			01
R0154	**RD357100**	Carbon Resistor (chip)	10K 63M J	チップ抵抗			01
-0161	**RD357100**	Carbon Resistor (chip)	10K 63M J	チップ抵抗			01
R0162	**RD354470**	Carbon Resistor (chip)	47 63M J	チップ抵抗			01
-0172	**RD354470**	Carbon Resistor (chip)	47 63M J	チップ抵抗			01
R0173	**RD359100**	Carbon Resistor (chip)	1.0M 63M J	チップ抵抗			01
R0174	**RD356120**	Carbon Resistor (chip)	1.2K 63M J	チップ抵抗			01
R0175	**RD250000**	Carbon Resistor (chip)	0.0 0.0 J	チップ抵抗			01
-0178	**RD250000**	Carbon Resistor (chip)	0.0 0.0 J	チップ抵抗			01
R0179	**RD355100**	Carbon Resistor (chip)	100 63M J	チップ抵抗			01
-0182	**RD355100**	Carbon Resistor (chip)	100 63M J	チップ抵抗			01
R0183	**RD357100**	Carbon Resistor (chip)	10K 63M J	チップ抵抗			01
-0187	**RD357100**	Carbon Resistor (chip)	10K 63M J	チップ抵抗			01
R0188	**RD354100**	Carbon Resistor (chip)	10 63M J	チップ抵抗			01
-0195	**RD354100**	Carbon Resistor (chip)	10 63M J	チップ抵抗			01
R0196	**RD355100**	Carbon Resistor (chip)	100 63M J	チップ抵抗			01
R0197	**RD355100**	Carbon Resistor (chip)	100 63M J	チップ抵抗			01
R0198	**RD354100**	Carbon Resistor (chip)	10 63M J	チップ抵抗			01
R0199	**RD354100**	Carbon Resistor (chip)	10 63M J	チップ抵抗			01
R0200	**RD355100**	Carbon Resistor (chip)	100 63M J	チップ抵抗			01
R0201	**RD354100**	Carbon Resistor (chip)	10 63M J	チップ抵抗			01
-0204	**RD354100**	Carbon Resistor (chip)	10 63M J	チップ抵抗			01
R0205	**RD355100**	Carbon Resistor (chip)	100 63M J	チップ抵抗			01
R0206	**RD354100**	Carbon Resistor (chip)	10 63M J	チップ抵抗			01
-0210	**RD354100**	Carbon Resistor (chip)	10 63M J	チップ抵抗			01
R0211	**RD358100**	Carbon Resistor (chip)	100K 63M J	チップ抵抗			01
R0212	**RD354100**	Carbon Resistor (chip)	10 63M J	チップ抵抗			01
R0213	**RD354100**	Carbon Resistor (chip)	10 63M J	チップ抵抗			01
R0214	**RD355100**	Carbon Resistor (chip)	100 63M J	チップ抵抗			01
R0215	**RD358100**	Carbon Resistor (chip)	100K 63M J	チップ抵抗			01
R0216	**RD359100**	Carbon Resistor (chip)	1.0M 63M J	チップ抵抗			01
R0217	**RD356680**	Carbon Resistor (chip)	6.8K 63M J	チップ抵抗			01
R0218	**RD350000**	Carbon Resistor (chip)	0 63M J	チップ抵抗			01
R0219	**RD350000**	Carbon Resistor (chip)	0 63M J	チップ抵抗			01
R0222	**RD354100**	Carbon Resistor (chip)	10 63M J	チップ抵抗			01
R0223	**RD357100**	Carbon Resistor (chip)	10K 63M J	チップ抵抗			01
R0224	**RD354100**	Carbon Resistor (chip)	10 63M J	チップ抵抗			01
R0225	**V4266800**	Carbon Resistor (chip)	110.0 63M F	チップ抵抗			01
-0242	**V4266800**	Carbon Resistor (chip)	110.0 63M F	チップ抵抗			01
R0243	**RD250000**	Carbon Resistor (chip)	0.0 0.0 J	チップ抵抗			01
-0254	**RD250000**	Carbon Resistor (chip)	0.0 0.0 J	チップ抵抗			01
R0255	**RD354100**	Carbon Resistor (chip)	10 63M J	チップ抵抗			01
-0260	**RD354100**	Carbon Resistor (chip)	10 63M J	チップ抵抗			01
R0261	**RD358470**	Carbon Resistor (chip)	470K 63M J	チップ抵抗			01
R0262	**RD358470**	Carbon Resistor (chip)	470K 63M J	チップ抵抗			01
R0263	**RD354100**	Carbon Resistor (chip)	10 63M J	チップ抵抗			01
R0267	**RD354100**	Carbon Resistor (chip)	10 63M J	チップ抵抗			01
R0268	**RD358470**	Carbon Resistor (chip)	470K 63M J	チップ抵抗			01
R0269	**RD358470**	Carbon Resistor (chip)	470K 63M J	チップ抵抗			01
R0270	**RD356470**	Carbon Resistor (chip)	4.7K 63M J	チップ抵抗			01
R0271	**RD155100**	Carbon Resistor (chip)	100.0 1/4 J	チップ抵抗			01
R0272	**RD155820**	Carbon Resistor (chip)	820.0 1/4 J	チップ抵抗			01
R0273	**RD357100**	Carbon Resistor (chip)	10K 63M J	チップ抵抗			01
R0274	**RD357100**	Carbon Resistor (chip)	10K 63M J	チップ抵抗			01
R0275	**RD354100**	Carbon Resistor (chip)	10 63M J	チップ抵抗			01
R0276	**RD357220**	Carbon Resistor (chip)	22K 63M J	チップ抵抗			01
-0289	**RD357220**	Carbon Resistor (chip)	22K 63M J	チップ抵抗			01
R0290	**RD357150**	Carbon Resistor (chip)	15K 63M J	チップ抵抗			01
-0297	**RD357150**	Carbon Resistor (chip)	15K 63M J	チップ抵抗			01
R0298	**RD354100**	Carbon Resistor (chip)	10 63M J	チップ抵抗			01
-0306	**RD354100**	Carbon Resistor (chip)	10 63M J	チップ抵抗			01
R0307	**RD356100**	Carbon Resistor (chip)	1.0K 63M J	チップ抵抗			01
-0311	**RD356100**	Carbon Resistor (chip)	1.0K 63M J	チップ抵抗			01
R0312	**RD354100**	Carbon Resistor (chip)	10 63M J	チップ抵抗			01
R0313	**RD354100**	Carbon Resistor (chip)	10 63M J	チップ抵抗			01

✻: New Parts

RANK: Japan only

REF NO.	PART NO.	DESCRIPTION		部品名	REMARKS	QTY	RANK
R0314	**RD357100**	Carbon Resistor (chip)	10K 63M J	チップ抵抗			01
R0315	**RD354100**	Carbon Resistor (chip)	10 63M J	チップ抵抗			01
R0316	**RD358470**	Carbon Resistor (chip)	470K 63M J	チップ抵抗			01
R0317	**RD356330**	Carbon Resistor (chip)	3.3K 63M J	チップ抵抗			01
-0337	**RD356330**	Carbon Resistor (chip)	3.3K 63M J	チップ抵抗			01
R0338	**RD355100**	Carbon Resistor (chip)	100 63M J	チップ抵抗			01
-0353	**RD355100**	Carbon Resistor (chip)	100 63M J	チップ抵抗			01
R0354	**RD354100**	Carbon Resistor (chip)	10 63M J	チップ抵抗			01
-0358	**RD354100**	Carbon Resistor (chip)	10 63M J	チップ抵抗			01
R0359	**RD356560**	Carbon Resistor (chip)	5.6K 63M J	チップ抵抗			01
R0360	**RD356560**	Carbon Resistor (chip)	5.6K 63M J	チップ抵抗			01
R0361	**RD354100**	Carbon Resistor (chip)	10 63M J	チップ抵抗			01
-0363	**RD354100**	Carbon Resistor (chip)	10 63M J	チップ抵抗			01
R0364	**RD359100**	Carbon Resistor (chip)	1.0M 63M J	チップ抵抗			01
R0365	**RD359100**	Carbon Resistor (chip)	1.0M 63M J	チップ抵抗			01
R0366	**RD356100**	Carbon Resistor (chip)	1.0K 63M J	チップ抵抗			01
R0367	**RD356220**	Carbon Resistor (chip)	2.2K 63M J	チップ抵抗			01
R0368	**RD354100**	Carbon Resistor (chip)	10 63M J	チップ抵抗			01
R0369	**RD354100**	Carbon Resistor (chip)	10 63M J	チップ抵抗			01
R0370	**RD355100**	Carbon Resistor (chip)	100 63M J	チップ抵抗			01
R0371	**RD357100**	Carbon Resistor (chip)	10K 63M J	チップ抵抗			01
R0372	**RD356220**	Carbon Resistor (chip)	2.2K 63M J	チップ抵抗			01
-0378	**RD356220**	Carbon Resistor (chip)	2.2K 63M J	チップ抵抗			01
R0379	**RD356120**	Carbon Resistor (chip)	1.2K 63M J	チップ抵抗			01
R0380	**RD355820**	Carbon Resistor (chip)	820 63M J	チップ抵抗			01
R0381	**RD355220**	Carbon Resistor (chip)	220 63M J	チップ抵抗			01
-0383	**RD355220**	Carbon Resistor (chip)	220 63M J	チップ抵抗			01
R0384	**RD356100**	Carbon Resistor (chip)	1.0K 63M J	チップ抵抗			01
R0385	**RD357470**	Carbon Resistor (chip)	47K 63M J	チップ抵抗			01
R0386	**RD354750**	Carbon Resistor (chip)	75 63M J	チップ抵抗			01
R0387	**RD357220**	Carbon Resistor (chip)	22K 63M J	チップ抵抗			01
R0388	**RD357560**	Carbon Resistor (chip)	56K 63M J	チップ抵抗			01
R0389	**RD357100**	Carbon Resistor (chip)	10K 63M J	チップ抵抗			01
R0390	**RD357100**	Carbon Resistor (chip)	10K 63M J	チップ抵抗			01
R0391	**RD355100**	Carbon Resistor (chip)	100 63M J	チップ抵抗			01
-0399	**RD355100**	Carbon Resistor (chip)	100 63M J	チップ抵抗			01
R0400	**RD357220**	Carbon Resistor (chip)	22K 63M J	チップ抵抗			01
R0401	**RD357220**	Carbon Resistor (chip)	22K 63M J	チップ抵抗			01
R0402	**RD357100**	Carbon Resistor (chip)	10K 63M J	チップ抵抗			01
R0403	**RD356560**	Carbon Resistor (chip)	5.6K 63M J	チップ抵抗			01
R0404	**RD357220**	Carbon Resistor (chip)	22K 63M J	チップ抵抗			01
R0405	**RD155470**	Carbon Resistor (chip)	470.0 1/4 J	チップ抵抗			
R0406	**RD155470**	Carbon Resistor (chip)	470.0 1/4 J	チップ抵抗			
R0407	**RD357220**	Carbon Resistor (chip)	22K 63M J	チップ抵抗			01
R0408	**RD357220**	Carbon Resistor (chip)	22K 63M J	チップ抵抗			01
R0409	**RD354100**	Carbon Resistor (chip)	10 63M J	チップ抵抗			01
-0413	**RD354100**	Carbon Resistor (chip)	10 63M J	チップ抵抗			01
R0414	**RD359100**	Carbon Resistor (chip)	1.0M 63M J	チップ抵抗			01
R0415	**RD355100**	Carbon Resistor (chip)	100 63M J	チップ抵抗			01
R0416	**RD354100**	Carbon Resistor (chip)	10 63M J	チップ抵抗			01
R0418	**RD350000**	Carbon Resistor (chip)	0 63M J	チップ抵抗			01
R0419	**RD354100**	Carbon Resistor (chip)	10 63M J	チップ抵抗			01
R0420	**RD354100**	Carbon Resistor (chip)	10 63M J	チップ抵抗			01
R0421	**RD357100**	Carbon Resistor (chip)	10K 63M J	チップ抵抗			01
R0422	**RD357100**	Carbon Resistor (chip)	10K 63M J	チップ抵抗			01
R0423	**RD354100**	Carbon Resistor (chip)	10 63M J	チップ抵抗			01
-0425	**RD354100**	Carbon Resistor (chip)	10 63M J	チップ抵抗			01
R0426	**RD357120**	Carbon Resistor (chip)	12K 63M J	チップ抵抗			01
R0427	**RD358470**	Carbon Resistor (chip)	470K 63M J	チップ抵抗			01
R0428	**RD354100**	Carbon Resistor (chip)	10 63M J	チップ抵抗			01
-0431	**RD354100**	Carbon Resistor (chip)	10 63M J	チップ抵抗			01
R0432	**RD250000**	Carbon Resistor (chip)	0.0 0.0 J	チップ抵抗			01
-0437	**RD250000**	Carbon Resistor (chip)	0.0 0.0 J	チップ抵抗			01
R0438	**RD357150**	Carbon Resistor (chip)	15K 63M J	チップ抵抗			01
-0443	**RD357150**	Carbon Resistor (chip)	15K 63M J	チップ抵抗			01
R0444	**RD357100**	Carbon Resistor (chip)	10K 63M J	チップ抵抗			01
-0448	**RD357100**	Carbon Resistor (chip)	10K 63M J	チップ抵抗			01
R0449	**RD354470**	Carbon Resistor (chip)	47 63M J	チップ抵抗			01
R0450	**RD354470**	Carbon Resistor (chip)	47 63M J	チップ抵抗			01
R0451	**RD354100**	Carbon Resistor (chip)	10 63M J	チップ抵抗			01

※: New Parts

RANK: Japan only

	REF NO.	PART NO.	DESCRIPTION		部品名	REMARKS	QTY	RANK
	R0452	**RD354470**	Carbon Resistor (chip)	47 63M J	チップ抵抗			01
	R0453	**RD357220**	Carbon Resistor (chip)	22K 63M J	チップ抵抗			01
	-0458	**RD357220**	Carbon Resistor (chip)	22K 63M J	チップ抵抗			01
	R0459	**RD350000**	Carbon Resistor (chip)	0 63M J	チップ抵抗			01
	-0472	**RD350000**	Carbon Resistor (chip)	0 63M J	チップ抵抗			01
	R0473	**RD354100**	Carbon Resistor (chip)	10 63M J	チップ抵抗			01
	-0476	**RD354100**	Carbon Resistor (chip)	10 63M J	チップ抵抗			01
	R0477	**RD350000**	Carbon Resistor (chip)	0 63M J	チップ抵抗			01
	-0481	**RD350000**	Carbon Resistor (chip)	0 63M J	チップ抵抗			01
	R0482	**RD354100**	Carbon Resistor (chip)	10 63M J	チップ抵抗			01
	R0483	**RD350000**	Carbon Resistor (chip)	0 63M J	チップ抵抗			01
	-0488	**RD350000**	Carbon Resistor (chip)	0 63M J	チップ抵抗			01
	R0489	**RD358100**	Carbon Resistor (chip)	100K 63M J	チップ抵抗			01
	-0491	**RD358100**	Carbon Resistor (chip)	100K 63M J	チップ抵抗			01
	R0492	**RD354100**	Carbon Resistor (chip)	10 63M J	チップ抵抗			01
	R0493	**RD350000**	Carbon Resistor (chip)	0 63M J	チップ抵抗			01
	-0508	**RD350000**	Carbon Resistor (chip)	0 63M J	チップ抵抗			01
	R0509	**RD357470**	Carbon Resistor (chip)	47K 63M J	チップ抵抗			01
	-0540	**RD357470**	Carbon Resistor (chip)	47K 63M J	チップ抵抗			01
	R0541	**RD358100**	Carbon Resistor (chip)	100K 63M J	チップ抵抗			01
	-0543	**RD358100**	Carbon Resistor (chip)	100K 63M J	チップ抵抗			01
	R0544	**RD250000**	Carbon Resistor (chip)	0.0 0.0 J	チップ抵抗			01
	R0545	**RD356100**	Carbon Resistor (chip)	1.0K 63M J	チップ抵抗			01
	TH001	**VV111600**	Poly Switch	SMD100-2018-2 SMD	ポリスイッチ			03
	TR001	**VV556400**	Transistor	2SC2412K Q,R,S	トランジスタ			01
	TR002	**VV556400**	Transistor	2SC2412K Q,R,S	トランジスタ			01
	TR003	**VJ927100**	Transistor	2SC2712 Y	トランジスタ			01
	TR004	**VI242900**	Transistor	2SA1020-Y(TPE6) Y	トランジスタ			01
	TR005	**VJ927200**	Transistor	2SA1162 O,Y	トランジスタ			01
	X0001	**VV762900**	Quartz Crystal Unit	7MHz SMD-49	水晶振動子			03
	X0002	**VR870700**	Quartz Crystal Unit	10MHz SMD-49	水晶振動子			04
	X0003	**VZ683900**	Quartz Crystal Unit	6.144MHz SMD-49	水晶振動子			05
	X0004	**V4458700**	Quartz Crystal Unit	22.5MHz SMD-49	水晶振動子			03
	X0005	**VY681200**	Ceramic Resonator	8MHz CSTCC8.00MG	セラミック発振子			01
	X0006	**V2370300**	Ceramic Resonator	16.00MHz CSACV16.0	セラミック振動子			01
*	X0007	**V6074800**	Quartz Crystal Unit	14.31818MHz SMD-49	水晶振動子			03
*	X0008	**V6074900**	Quartz Crystal Unit	17.734475MHzSMD-49	水晶振動子			03
		VY638900	Circuit Board	INV	INVシート	(XT122A0)		13
	C0001	**VP318400**	Electrolytic Cap. (chip)	0.068 250 ECQE26	コンデンサ			01
	C0002	**VS147400**	Ceramic Capacitor-SL	18P 3KV J	セラコンSL			01
	CN001	**LB919020**	Base Post Connector	XH- 2P SE	ベーストツキポスト			01
	CN002	**VT389600**	Base Post Connector	53259 4P SE	ベースポスト			01
	L0001	**VS587900**	Coil	LH L 08TB221K 220u	コイル220UH			01
	L0002	**VS602500**	Inverter Transformer	CLF16A	インバータトランス			07
	R0001	**HF756560**	Carbon Resistor	5.6K 1/4 J	カーボン抵抗			01
	R0002	**HF756560**	Carbon Resistor	5.6K 1/4 J	カーボン抵抗			01
	TR001	**VS185700**	Transistor	2SC3669-O/Y(TPF2)	トランジスタ			01
	TR001	**VS185600**	Transistor	2SD1863 TV2 82-390	トランジスタ			01
	TR002	**VS185700**	Transistor	2SC3669-O/Y(TPF2)	トランジスタ			01
	TR002	**VS185600**	Transistor	2SD1863 TV2 82-390	トランジスタ			01
*		**V5895700**	Circuit Board	MIC/HP	MIC／HPシート	(XY704C0)		
*		**V5895800**	Circuit Board	MIC/VR	MIC／VRシート	(XY704C0)		
*		**V5895900**	Circuit Board	LED	LEDシート	(XY704C0)		
		03753500	Bind Head Screw	3.0X8 MFZN2Y	+バインド小ネジ			01
		--	Jumper Wire	0.55	ジャンパー線	(VD04170)		
	C0101	**VE327200**	Monolithic Mylar Capacitor	1.0 50V J	積層マイラーコン			02
	C0101	**VU838100**	Monolithic Mylar Capacitor	1.0000 50V J	積層マイラーコン			
	C0102	**VE327200**	Monolithic Mylar Capacitor	1.0 50V J	積層マイラーコン			02
	C0102	**VU838100**	Monolithic Mylar Capacitor	1.0000 50V J	積層マイラーコン			
	C0103	**FG612560**	Ceramic Capacitor-B	560P 50V K	セラコン（B）			01
	C0104	**FG612560**	Ceramic Capacitor-B	560P 50V K	セラコン（B）			01
	C0105	**UN866100**	Electrolytic Cap.-BP	1.00 50.0V	BPケミコン			01
	C0106	**VC694800**	Semiconductive Cera. Cap.	0.1000 25V Z	半導体セラコン			01
	C0107	**VC694800**	Semiconductive Cera. Cap.	0.1000 25V Z	半導体セラコン			01
	C0108	**FG612100**	Ceramic Cap.-B	100P 50V K	セラコンB			01
	C0109	**FG612220**	Ceramic Capacitor-B	220P 50V K	セラコン（B）			01
	C0110	**UN866100**	Electrolytic Cap.-BP	1.00 50.0V	BPケミコン			01
	C0111	**FG612100**	Ceramic Cap.-B	100P 50V K	セラコンB			01

*: New Parts

RANK: Japan only

	REF NO.	PART NO.	DESCRIPTION		部品名	REMARKS	QTY	RANK
	C0112	**FG613820**	Ceramic Capacitor-B	8200P 50V K	セラコン（B）			01
	C0113	**UN866100**	Electrolytic Cap.-BP	1.00 50.0V	BPケミコン			01
	C0114	**FG612100**	Ceramic Cap.-B	100P 50V K	セラコン B			01
	C0115	**FG613270**	Ceramic Capacitor-B	2700P 50V K	セラコン（B）			01
	C0116	**UN866100**	Electrolytic Cap.-BP	1.00 50.0V	BPケミコン			01
	C0117	**VC694800**	Semiconductive Cera. Cap.	0.1000 25V Z	半導体セラコン			01
	C0118	**VC694800**	Semiconductive Cera. Cap.	0.1000 25V Z	半導体セラコン			01
	C0119	**UR848100**	Electrolytic Cap.	100.00 25.0V	ケミコン			01
	C0120	**UR848100**	Electrolytic Cap.	100.00 25.0V	ケミコン			01
	C0121	**FG644100**	Ceramic Capacitor-F	0.0100 50V Z	セラコン（F）			01
	C0122	**FG644100**	Ceramic Capacitor-F	0.0100 50V Z	セラコン（F）			01
	C0123	**UR865470**	Electrolytic Cap.	0.47 50.0V	ケミコン			01
	C0124	**UR847470**	Electrolytic Cap.	47.00 25.0V	ケミコン			01
	C0125	**VC694800**	Semiconductive Cera. Cap.	0.1000 25V Z	半導体セラコン			01
	C0126	**VC694800**	Semiconductive Cera. Cap.	0.1000 25V Z	半導体セラコン			01
	CN001	**VB858200**	Connector Base Post	PH- 3P SE	コネクタベースポスト			01
	CN101	**VE352600**	Connector Base Post	PH-14P TE	コネクタベースポスト			01
	CN102	**VB390400**	Connector Base Post	PH- 8P TE	コネクタベースポスト			01
	CN103	**VB390300**	Connector Base Post	PH- 7P TE	コネクタベースポスト			01
	CN104	**LB919040**	Base Post Connector	XH- 4P SE	ベースツキポスト			01
	CN105	**LB919030**	Base Post Connector	XH- 3P SE	ベースツキポスト			01
	CN106	**LB919020**	Base Post Connector	XH- 2P SE	ベースツキポスト			01
	CN201	**VE352600**	Connector Base Post	PH-14P TE	コネクタベースポスト			01
	D0101	**VB481900**	Diode	11ES4	ダイオード			01
	HS101	**--**	Heat Sink	OSH-2430-SPL	放熱器	(V667660)		
	IC101	**XC520A00**	IC	UPC4570C	IC	OP AMP		01
	IC102	**XC520A00**	IC	UPC4570C	IC	OP AMP		01
*	IC103	**XZ265A00**	IC	PQ15RW11	IC	REGULATOR +15V 1.0A		03
	JK101	**V2910100**	XLM Connector		キャノンコネクタ	MIC/LINE IN		06
	JK102	**LB101870**	Phone Jack	YKB21-5006	ホーンコネクタ	PHONES		03
	L0101	**VF456600**	Coil	SBT-0180W 80uH	コイル 80U			03
	L0102	**VF456600**	Coil	SBT-0180W 80uH	コイル 80U			03
	LD001	**VT361700**	LED Green	SLZ-274B-03-T1	LED	DISK IN USE		01
	LD201	**VT659100**	LED Red	SLZ-174B-03-T1	LED	MIC/LINE IN(OVER)		01
	LD202	**VT361700**	LED Green	SLZ-274B-03-T1	LED	MIC/LINE IN(SIGNAL)		01
	MFM	**--**	Holder, Volume		ボリューム取付け金具	(V615630)		
	R0101	**HF757100**	Carbon Resistor	10.0K 1/4 J	カーボン抵抗			01
	-0104	**HF757100**	Carbon Resistor	10.0K 1/4 J	カーボン抵抗			01
	R0105	**HF755100**	Carbon Resistor	100.0 1/4 J	カーボン抵抗			01
	R0106	**HF755220**	Carbon Resistor	220.0 1/4 J	カーボン抵抗			01
	R0107	**HF755220**	Carbon Resistor	220.0 1/4 J	カーボン抵抗			01
	R0108	**HF756100**	Carbon Resistor	1.0K 1/4 J	カーボン抵抗			01
	R0109	**HF757270**	Carbon Resistor	27.0K 1/4 J	カーボン抵抗			01
	R0110	**HF758100**	Carbon Resistor	100.0K 1/4 J	カーボン抵抗			01
	R0111	**HF756100**	Carbon Resistor	1.0K 1/4 J	カーボン抵抗			01
	R0112	**HF756330**	Carbon Resistor	3.3K 1/4 J	カーボン抵抗			01
	R0113	**HF758100**	Carbon Resistor	100.0K 1/4 J	カーボン抵抗			01
	R0114	**HF758100**	Carbon Resistor	100.0K 1/4 J	カーボン抵抗			01
	R0115	**HF756100**	Carbon Resistor	1.0K 1/4 J	カーボン抵抗			01
	R0116	**HF757100**	Carbon Resistor	10.0K 1/4 J	カーボン抵抗			01
	R0117	**HF758100**	Carbon Resistor	100.0K 1/4 J	カーボン抵抗			01
	R0118	**VH696500**	Carbon Resistor	68.0 1/2 J	カーボン抵抗			
	R0119	**VH696500**	Carbon Resistor	68.0 1/2 J	カーボン抵抗			
	R0120	**VH005700**	Metal Film Resistor	2.4K 1/4 F	金属被膜抵抗			01
	R0121	**VH005800**	Metal Film Resistor	2.7K 1/4 F	金属被膜抵抗			01
	R0122	**HF758100**	Carbon Resistor	100.0K 1/4 J	カーボン抵抗			01
	R0123	**HF758100**	Carbon Resistor	100.0K 1/4 J	カーボン抵抗			01
	R0201	**HF758100**	Carbon Resistor	100.0K 1/4 J	カーボン抵抗			01
	SW201	**V4400100**	Slide Switch	SSSF025000	スライドSW	MIC/LINE IN		02
*	VR101	**V5685900**	Variable Resistor	B 5K RKO971111Z1G	SW付VR	DIMMER		04
	VR201	**VF636100**	Rotary Variable Resistor	A 10.0K RK09K12C	二連ロータリーVR	INPUT VOLUME		03
	WB101	**GE300670**	Ferrite Bead	BL02RN2-R62T4	フェライトビーズ			02
	-108	**GE300670**	Ferrite Bead	BL02RN2-R62T4	フェライトビーズ			02
	WB110	**VB835000**	Coil	FL5R200QNT 20uH	コイル 20U			01
	WB111	**VB835000**	Coil	FL5R200QNT 20uH	コイル 20U			01
	WB113	**VB835000**	Coil	FL5R200QNT 20uH	コイル 20U			01
		NA810850	Circuit Board	MK-1	MK-1シート	(LC90213)		07
	10	**IF003460**	Diode	1SS133	ダイオード			01
	20	**LB606130**	Header, Flat Cable	HIF3 20P SE	ヘッダー			05

※: New Parts

RANK: Japan only

	REF NO.	PART NO.	DESCRIPTION		部品名	REMARKS	QTY	RANK
		NA810860	Circuit Board	MK-2	**MK－2シート**	(LC90223)		08
	10	**IF003460**	Diode	1SS133	**ダイオード**			01
	20	**LB920300**	Connector	30P SE	**コネクタ**			06
		VK263600	Circuit Board	PC	**PCシート**	(XI930B0)		08
	CN2	**LB016030**	Connector	FFC 3P TE	**コネクタ**			01
	CN1	**VA030800**	Base Post Connector	5483 8P TE	**ベースポスト**			01
	D1	**VA240700**	Diode	1SS176	**ダイオード**			01
	D2	**VA240700**	Diode	1SS176	**ダイオード**			01
	IC1	**IG001390**	IC	RC4558D-V	**IC**	OP AMP		03
	VR1	**V4818800**	Trimmer Potentiometer	B 50.0K 3P VZ0	**半固定VR**	Touch Sensitivity (min.)		01
	VR2	**V4818900**	Trimmer Potentiometer	B 100.0K 3P VZ0	**半固定VR**	Touch Sensitivity (max.)		01
	ZD1	**VQ553200**	Zener Diode	MTZJ5.1A 5.1V	**ツェナーダイオード**			01
		UA555100	Mylar Capacitor	0.1000 50V J	**マイラーコン**			02
		HK055150	Carbon Resistor	150.0 1/4 J	**カーボン抵抗**			01
		HK055330	Carbon Resistor	330.0 1/4 J	**カーボン抵抗**			01
		HK056100	Carbon Resistor	1.0K 1/4 J	**カーボン抵抗**			01
		HK056120	Carbon Resistor	1.2K 1/4 J	**カーボン抵抗**			01
		HK056270	Carbon Resistor	2.7K 1/4 J	**カーボン抵抗**			01
		HK056560	Carbon Resistor	5.6K 1/4 J	**カーボン抵抗**			01
		HK057470	Carbon Resistor	47.0K 1/4 J	**カーボン抵抗**			01
*		**V6074000**	Circuit Board	PN1	**PN1シート**	(XW443B0)		
*		**V6074100**	Circuit Board	PN2	**PN2シート**	(XW443B0)		
*		**V6074200**	Circuit Board	EN	**ENシート**	(XW443B0)		
		--	GND Wire		**アース線**	(V562500)		
	C001	**VC694800**	Semiconductive Cera. Cap.	0.1000 25V Z	**半導体セラコン**			01
	C002	**FG644100**	Ceramic Capacitor-F	0.0100 50V Z	**セラコン（F）**			01
	C003	**UM378100**	Electrolytic Cap.	100.00 10.0V	**ケミコン**			01
	C004	**FG613100**	Ceramic Capacitor-B	1000P 50V K	**セラコン（B）**			01
	C005	**FG651220**	Ceramic Capacitor-SL	22P 50V J	**セラコン（SL）**			01
	C006	**FG644100**	Ceramic Capacitor-F	0.0100 50V Z	**セラコン（F）**			01
	C007	**UR628100**	Electrolytic Cap.	100.00 10.0V	**ケミコン**			01
	C008	**FG644100**	Ceramic Capacitor-F	0.0100 50V Z	**セラコン（F）**			01
	C009	**UM378100**	Electrolytic Cap.	100.00 10.0V	**ケミコン**			01
	C010	**UM378100**	Electrolytic Cap.	100.00 10.0V	**ケミコン**			01
	CN001	**VB858800**	Connector Base Post	PH- 9P SE	**コネクタベースポスト**			01
	CN002	**VB858300**	Connector Base Post	PH- 4P SE	**コネクタベースポスト**			01
	CN003	**VH904200**	Connector Base Post	PH-14P SE	**コネクタベースポスト**			01
	CN004	**VK015600**	Connector Base Post	PH-16P SE	**コネクタベースポスト**			01
	CN005	**VB858200**	Connector Base Post	PH- 3P SE	**コネクタベースポスト**			01
	CN101	**VH904200**	Connector Base Post	PH-14P SE	**コネクタベースポスト**			01
	CN102	**VB858900**	Connector Base Post	PH-10P SE	**コネクタベースポスト**			01
	CN201	**VB858300**	Connector Base Post	PH- 4P SE	**コネクタベースポスト**			01
	D001	**VB941200**	Diode	1SS133,1SS176	**ダイオード**			01
	-065	**VB941200**	Diode	1SS133,1SS176	**ダイオード**			01
	D101	**VB941200**	Diode	1SS133,1SS176	**ダイオード**			01
	-120	**VB941200**	Diode	1SS133,1SS176	**ダイオード**			01
	D201	**VB941200**	Diode	1SS133,1SS176	**ダイオード**			01
	D202	**VB941200**	Diode	1SS133,1SS176	**ダイオード**			01
	EC201	**VU481300**	Encoder	REB161 PVB 15F	**16形エンコーダ**	Data dial		03
	IC001	**XS711200**	IC	MN101C027YB	**IC**	CPU		06
	IC002	**V4341100**	Transistor Array	TD62083CP	**トランジスタアレイ**			04
	IC004	**VH885000**	Transistor Array	TD62785P SOURCE	**トランジスタアレイ**			04
	LE001	**VG778600**	LED Green	SLZ290B-03-T2	**LED**	SONG FILE DIRECTORY(1)		01
	LE002	**VG778600**	LED Green	SLZ290B-03-T2	**LED**	SONG FILE DIRECTORY(2)		01
	LE003	**VG778600**	LED Green	SLZ290B-03-T2	**LED**	SONG FILE DIRECTORY(3)		01
	LE004	**VG778600**	LED Green	SLZ290B-03-T2	**LED**	SONG FILE DIRECTORY(4)		01
	LE005	**VG778600**	LED Green	SLZ290B-03-T2	**LED**	SONG FILE DIRECTORY(5)		01
	LE006	**VG778600**	LED Green	SLZ290B-03-T2	**LED**	SONG FILE DI.(SONG SETUP)		01
	LE007	**VT659100**	LED Red	SLZ-174B-03-T1	**LED**	SONG PLAYER		01
	LE008	**VT659100**	LED Red	SLZ-174B-03-T1	**LED**	AUTO ACCOMPANIMENT		01
	LE009	**VG778600**	LED Green	SLZ290B-03-T2	**LED**	PRESET STYLE(8 BEAT)		01
	LE010	**VG778600**	LED Green	SLZ290B-03-T2	**LED**	PRESET STYLE(16 BEAT)		01
	LE011	**VG778600**	LED Green	SLZ290B-03-T2	**LED**	PRESET STYLE(DANCE)		01
	LE012	**VG778600**	LED Green	SLZ290B-03-T2	**LED**	PRESET STYLE(SWING&JAZZ)		01
	LE013	**VG778600**	LED Green	SLZ290B-03-T2	**LED**	PRESET STYLE(R&B)		01
	LE014	**VG778600**	LED Green	SLZ290B-03-T2	**LED**	PRESET STYLE(COUNTRY)		01
	LE015	**VG778600**	LED Green	SLZ290B-03-T2	**LED**	PRESET STYLE(LATIN)		01

*: New Parts

RANK: Japan only

REF NO.	PART NO.	DESCRIPTION		部品名	REMARKS	QTY	RANK
LE016	**VG778600**	LED Green	SLZ290B-03-T2	**LED**	PRESET STYLE(MARCH&WALTZ)		01
LE017	**VG778600**	LED Green	SLZ290B-03-T2	**LED**	PRESET STYLE(BALLROOM)		01
LE018	**VG778600**	LED Green	SLZ290B-03-T2	**LED**	FLASH STYLE(1)		01
LE019	**VG778600**	LED Green	SLZ290B-03-T2	**LED**	FLASH STYLE(2)		01
LE020	**VG778600**	LED Green	SLZ290B-03-T2	**LED**	FLASH STYLE(3)		01
LE021	**VG778600**	LED Green	SLZ290B-03-T2	**LED**	FLASH STYLE(4)		01
LE022	**VG778600**	LED Green	SLZ290B-03-T2	**LED**	FLASH STYLE(5)		01
LE023	**VG778600**	LED Green	SLZ290B-03-T2	**LED**	FLASH STYLE(6)		01
LE024	**VG778600**	LED Green	SLZ290B-03-T2	**LED**	FLASH STYLE(7)		01
LE025	**VG778600**	LED Green	SLZ290B-03-T2	**LED**	FLASH STYLE(8)		01
LE026	**VG778600**	LED Green	SLZ290B-03-T2	**LED**	FLASH STYLE(DISK DIRECT)		01
LE027	**VD180000**	LED Red	SLZ-190B-03	**LED**	ACCOMP.CONTROL(INTRO 1)		01
LE028	**VD180000**	LED Red	SLZ-190B-03	**LED**	ACCOMP.CONTROL(INTRO 2)		01
LE029	**VD180000**	LED Red	SLZ-190B-03	**LED**	ACCOMP.CONTROL(INTRO 3)		01
LE030	**VD180000**	LED Red	SLZ-190B-03	**LED**	ACCOMP.CONTROL(TAP TEMPO)		01
LE031	**VD180000**	LED Red	SLZ-190B-03	**LED**	ACCOMP.CTRL.(VARIATION A)		01
LE032	**VD180000**	LED Red	SLZ-190B-03	**LED**	ACCOMP.CTRL.(VARIATION B)		01
LE033	**VD180000**	LED Red	SLZ-190B-03	**LED**	ACCOMP.CTRL.(VARIATION C)		01
LE034	**VD180000**	LED Red	SLZ-190B-03	**LED**	ACCOMP.CTRL.(VARIATION D)		01
LE035	**VD180000**	LED Red	SLZ-190B-03	**LED**	ACCOMP.CONTROL(ENDING 1)		01
LE036	**VD180000**	LED Red	SLZ-190B-03	**LED**	ACCOMP.CONTROL(ENDING 2)		01
LE037	**VD180000**	LED Red	SLZ-190B-03	**LED**	ACCOMP.CONTROL(ENDING 3)		01
LE038	**VD180000**	LED Red	SLZ-190B-03	**LED**	ACCOMP.CONTROL(FADE I/O)		01
LE039	**VD180000**	LED Red	SLZ-190B-03	**LED**	ACCOMP.CONTROL(FILL IN <)		01
LE040	**VD180000**	LED Red	SLZ-190B-03	**LED**	ACCOMP.CONTROL(FILL IN)		01
LE041	**VD180000**	LED Red	SLZ-190B-03	**LED**	ACCOMP.CONTROL(BREAK)		01
LE042	**VD180000**	LED Red	SLZ-190B-03	**LED**	ACCOMP.CONTROL(FILL IN >)		01
LE043	**VD180000**	LED Red	SLZ-190B-03	**LED**	ACCOMP.CONTROL(SYNC.STOP)		01
LE044	**VD180000**	LED Red	SLZ-190B-03	**LED**	ACCOMP.CONTROL(SYNC.START		01
LE101	**VT659100**	LED Red	SLZ-174B-03-T1	**LED**	BEAT		01
LE102	**VT361700**	LED Green	SLZ-274B-03-T1	**LED**	BEAT		01
LE103	**VT361700**	LED Green	SLZ-274B-03-T1	**LED**	BEAT		01
LE104	**VT361700**	LED Green	SLZ-274B-03-T1	**LED**	BEAT		01
LE105	**VT425300**	LED Green	SLZ-290B-17-T1	**LED**	TEMPO		01
LE106	**VT425100**	LED Red	SLZ-190B-17-T1	**LED**	DATA ENTRY		01
R001	**HF454270**	Carbon Resistor	27.0 1/4 J	**カーボン抵抗**			01
-008	**HF454270**	Carbon Resistor	27.0 1/4 J	**カーボン抵抗**			01
R001	**HF754270**	Carbon Resistor	27.0 1/4 J	**カーボン抵抗**			01
-008	**HF754270**	Carbon Resistor	27.0 1/4 J	**カーボン抵抗**			01
R009	**HF457220**	Carbon Resistor	22.0K 1/4 J	**カーボン抵抗**			01
R009	**HF757220**	Carbon Resistor	22.0K 1/4 J	**カーボン抵抗**			01
R010	**HF454270**	Carbon Resistor	27.0 1/4 J	**カーボン抵抗**			01
R010	**HF754270**	Carbon Resistor	27.0 1/4 J	**カーボン抵抗**			01
R011	**HF457220**	Carbon Resistor	22.0K 1/4 J	**カーボン抵抗**			01
R011	**HF757220**	Carbon Resistor	22.0K 1/4 J	**カーボン抵抗**			01
R012	**HF454270**	Carbon Resistor	27.0 1/4 J	**カーボン抵抗**			01
R012	**HF754270**	Carbon Resistor	27.0 1/4 J	**カーボン抵抗**			01
R013	**HF457220**	Carbon Resistor	22.0K 1/4 J	**カーボン抵抗**			01
R013	**HF757220**	Carbon Resistor	22.0K 1/4 J	**カーボン抵抗**			01
R014	**HF454270**	Carbon Resistor	27.0 1/4 J	**カーボン抵抗**			01
R014	**HF754270**	Carbon Resistor	27.0 1/4 J	**カーボン抵抗**			01
R015	**HF457220**	Carbon Resistor	22.0K 1/4 J	**カーボン抵抗**			01
R015	**HF757220**	Carbon Resistor	22.0K 1/4 J	**カーボン抵抗**			01
R016	**HF454270**	Carbon Resistor	27.0 1/4 J	**カーボン抵抗**			01
R016	**HF754270**	Carbon Resistor	27.0 1/4 J	**カーボン抵抗**			01
R017	**HF457100**	Carbon Resistor	10.0K 1/4 J	**カーボン抵抗**			01
-028	**HF457100**	Carbon Resistor	10.0K 1/4 J	**カーボン抵抗**			01
R017	**HF757100**	Carbon Resistor	10.0K 1/4 J	**カーボン抵抗**			01
-028	**HF757100**	Carbon Resistor	10.0K 1/4 J	**カーボン抵抗**			01
R029	**HF757100**	Carbon Resistor	10.0K 1/4 J	**カーボン抵抗**			01
R029	**HF457100**	Carbon Resistor	10.0K 1/4 J	**カーボン抵抗**			01
R030	**HF457100**	Carbon Resistor	10.0K 1/4 J	**カーボン抵抗**			01
-035	**HF457100**	Carbon Resistor	10.0K 1/4 J	**カーボン抵抗**			01
R030	**HF757100**	Carbon Resistor	10.0K 1/4 J	**カーボン抵抗**			01
-035	**HF757100**	Carbon Resistor	10.0K 1/4 J	**カーボン抵抗**			01
R036	**HF455100**	Carbon Resistor	100.0 1/4 J	**カーボン抵抗**			01
R036	**HF755100**	Carbon Resistor	100.0 1/4 J	**カーボン抵抗**			01
R037	**HF456270**	Carbon Resistor	2.7K 1/4 J	**カーボン抵抗**			01
R037	**HF756270**	Carbon Resistor	2.7K 1/4 J	**カーボン抵抗**			01
SW001	**VV439800**	Tact Switch	SKQNAJ	**タクトSW**	SONG FILE DIRECTORY(1)		01

※: New Parts

RANK: Japan only

REF NO.	PART NO.	DESCRIPTION		部 品 名	REMARKS	QTY	RANK
SW002	**VV439800**	Tact Switch	SKQNAJ	タクトSW	SONG FILE DIRECTORY(2)		01
SW003	**VV439800**	Tact Switch	SKQNAJ	タクトSW	SONG FILE DIRECTORY(3)		01
SW004	**VV439800**	Tact Switch	SKQNAJ	タクトSW	SONG FILE DIRECTORY(4)		01
SW005	**VV439800**	Tact Switch	SKQNAJ	タクトSW	SONG FILE DIRECTORY(5)		01
SW006	**VV439800**	Tact Switch	SKQNAJ	タクトSW	SONG FILE DI.(SONG SETUP)		01
SW007	**VV439800**	Tact Switch	SKQNAJ	タクトSW	SONG PLAYER		01
SW008	**VV439800**	Tact Switch	SKQNAJ	タクトSW	AUTO ACCOMPANIMENT		01
SW009	**VV439800**	Tact Switch	SKQNAJ	タクトSW	PRESET STYLE(8 BEAT)		01
SW010	**VV439800**	Tact Switch	SKQNAJ	タクトSW	PRESET STYLE(16 BEAT)		01
SW011	**VV439800**	Tact Switch	SKQNAJ	タクトSW	PRESET STYLE(DANCE)		01
SW012	**VV439800**	Tact Switch	SKQNAJ	タクトSW	PRESET STYLE(SWING&JAZZ)		01
SW013	**VV439800**	Tact Switch	SKQNAJ	タクトSW	PRESET STYLE(R&B)		01
SW014	**VV439800**	Tact Switch	SKQNAJ	タクトSW	PRESET STYLE(COUNTRY)		01
SW015	**VV439800**	Tact Switch	SKQNAJ	タクトSW	PRESET STYLE(LATIN)		01
SW016	**VV439800**	Tact Switch	SKQNAJ	タクトSW	PRESET STYLE(MARCH&WALTZ)		01
SW017	**VV439800**	Tact Switch	SKQNAJ	タクトSW	PRESET STYLE(BALLROOM)		01
SW018	**VV439800**	Tact Switch	SKQNAJ	タクトSW	FLASH STYLE(1)		01
SW019	**VV439800**	Tact Switch	SKQNAJ	タクトSW	FLASH STYLE(2)		01
SW020	**VV439800**	Tact Switch	SKQNAJ	タクトSW	FLASH STYLE(3)		01
SW021	**VV439800**	Tact Switch	SKQNAJ	タクトSW	FLASH STYLE(4)		01
SW022	**VV439800**	Tact Switch	SKQNAJ	タクトSW	FLASH STYLE(5)		01
SW023	**VV439800**	Tact Switch	SKQNAJ	タクトSW	FLASH STYLE(6)		01
SW024	**VV439800**	Tact Switch	SKQNAJ	タクトSW	FLASH STYLE(7)		01
SW025	**VV439800**	Tact Switch	SKQNAJ	タクトSW	FLASH STYLE(8)		01
SW026	**VV439800**	Tact Switch	SKQNAJ	タクトSW	FLASH STYLE(DISK DIRECT)		01
SW027	**VV439800**	Tact Switch	SKQNAJ	タクトSW	MENU(DISK/SCSI)		01
SW028	**VV439800**	Tact Switch	SKQNAJ	タクトSW	MENU(FUNCTION)		01
SW029	**VV439800**	Tact Switch	SKQNAJ	タクトSW	MENU(MIDI)		01
SW030	**VV439800**	Tact Switch	SKQNAJ	タクトSW	TRANSPOSE(-)		01
SW031	**VV439800**	Tact Switch	SKQNAJ	タクトSW	TRANSPOSE(+)		01
SW032	**VV439800**	Tact Switch	SKQNAJ	タクトSW	ACCOMP.CONTROL(INTRO 1)		01
SW033	**VV439800**	Tact Switch	SKQNAJ	タクトSW	ACCOMP.CONTROL(INTRO 2)		01
SW034	**VV439800**	Tact Switch	SKQNAJ	タクトSW	ACCOMP.CONTROL(INTRO 3)		01
SW035	**VV439800**	Tact Switch	SKQNAJ	タクトSW	ACCOMP.CONTROL(TAP TEMPO)		01
SW036	**VV439800**	Tact Switch	SKQNAJ	タクトSW	ACCOMP.CTRL.(VARIATION A)		01
SW037	**VV439800**	Tact Switch	SKQNAJ	タクトSW	ACCOMP.CTRL.(VARIATION B)		01
SW038	**VV439800**	Tact Switch	SKQNAJ	タクトSW	ACCOMP.CTRL.(VARIATION C)		01
SW039	**VV439800**	Tact Switch	SKQNAJ	タクトSW	ACCOMP.CTRL.(VARIATION D)		01
SW040	**VV439800**	Tact Switch	SKQNAJ	タクトSW	ACCOMP.CONTROL(ENDING 1)		01
SW041	**VV439800**	Tact Switch	SKQNAJ	タクトSW	ACCOMP.CONTROL(ENDING 2)		01
SW042	**VV439800**	Tact Switch	SKQNAJ	タクトSW	ACCOMP.CONTROL(ENDING 3)		01
SW043	**VV439800**	Tact Switch	SKQNAJ	タクトSW	ACCOMP.CONTROL(FADE I/O)		01
SW044	**VV439800**	Tact Switch	SKQNAJ	タクトSW	ACCOMP.CONTROL(FILL IN <)		01
SW045	**VV439800**	Tact Switch	SKQNAJ	タクトSW	ACCOMP.CONTROL(FILL IN)		01
SW046	**VV439800**	Tact Switch	SKQNAJ	タクトSW	ACCOMP.CONTROL(BREAK)		01
SW047	**VV439800**	Tact Switch	SKQNAJ	タクトSW	ACCOMP.CONTROL(FILL IN >)		01
SW048	**VV439800**	Tact Switch	SKQNAJ	タクトSW	ACCOMP.CONTROL(SYNC.STOP)		01
SW049	**VV439800**	Tact Switch	SKQNAJ	タクトSW	ACCOMP.CONTROL(SYNC.START		01
SW050	**VV439800**	Tact Switch	SKQNAJ	タクトSW	ACCOMP.CONTROL(START/STOP		01
SW051	**VV439800**	Tact Switch	SKQNAJ	タクトSW	MULTIPAD(STOP)		01
SW052	**VV439800**	Tact Switch	SKQNAJ	タクトSW	MULTIPAD(M.PAD BANK -)		01
SW053	**VV439800**	Tact Switch	SKQNAJ	タクトSW	MULTIPAD(M.PAD BANK +)		01
SW054	**VV439800**	Tact Switch	SKQNAJ	タクトSW	MULTIPAD(1)		01
SW055	**VV439800**	Tact Switch	SKQNAJ	タクトSW	MULTIPAD(2)		01
SW056	**VV439800**	Tact Switch	SKQNAJ	タクトSW	MULTIPAD(3)		01
SW057	**VV439800**	Tact Switch	SKQNAJ	タクトSW	MULTIPAD(4)		01
SW058	**VV439800**	Tact Switch	SKQNAJ	タクトSW	D.STUDIO(SOUND CREATOR)		01
SW059	**VV439800**	Tact Switch	SKQNAJ	タクトSW	D.STUDIO(DIGITAL RECORDIN		01
SW060	**VV439800**	Tact Switch	SKQNAJ	タクトSW	D.STUDIO(MIXING CONSOLE)		01
SW061	**VV439800**	Tact Switch	SKQNAJ	タクトSW	LCD select(A)		01
SW062	**VV439800**	Tact Switch	SKQNAJ	タクトSW	LCD select(B)		01
SW063	**VV439800**	Tact Switch	SKQNAJ	タクトSW	LCD select(C)		01
SW064	**VV439800**	Tact Switch	SKQNAJ	タクトSW	LCD select(D)		01
SW065	**VV439800**	Tact Switch	SKQNAJ	タクトSW	LCD select(E)		01
SW101	**VV439800**	Tact Switch	SKQNAJ	タクトSW	MAIN MIXER		01
SW102	**VV439800**	Tact Switch	SKQNAJ	タクトSW	PART ON/OFF		01
SW103	**VV439800**	Tact Switch	SKQNAJ	タクトSW	LCD select 1(Up)		01
SW104	**VV439800**	Tact Switch	SKQNAJ	タクトSW	LCD select 1(Down)		01
SW105	**VV439800**	Tact Switch	SKQNAJ	タクトSW	LCD select 2(Up)		01
SW106	**VV439800**	Tact Switch	SKQNAJ	タクトSW	LCD select 2(Down)		01

✻: New Parts

RANK: Japan only

	REF NO.	PART NO.	DESCRIPTION		部品名	REMARKS	QTY	RANK
	SW107	**VV439800**	Tact Switch	SKQNAJ	タクトSW	LCD select 3(Up)		01
	SW108	**VV439800**	Tact Switch	SKQNAJ	タクトSW	LCD select 3(Down)		01
	SW109	**VV439800**	Tact Switch	SKQNAJ	タクトSW	LCD select 4(Up)		01
	SW110	**VV439800**	Tact Switch	SKQNAJ	タクトSW	LCD select 4(Down)		01
	SW111	**VV439800**	Tact Switch	SKQNAJ	タクトSW	LCD select 5(Up)		01
	SW112	**VV439800**	Tact Switch	SKQNAJ	タクトSW	LCD select 5(Down)		01
	SW113	**VV439800**	Tact Switch	SKQNAJ	タクトSW	LCD select 6(Up)		01
	SW114	**VV439800**	Tact Switch	SKQNAJ	タクトSW	LCD select 6(Down)		01
	SW115	**VV439800**	Tact Switch	SKQNAJ	タクトSW	LCD select 7(Up)		01
	SW116	**VV439800**	Tact Switch	SKQNAJ	タクトSW	LCD select 7(Down)		01
	SW117	**VV439800**	Tact Switch	SKQNAJ	タクトSW	LCD select 8(Up)		01
	SW118	**VV439800**	Tact Switch	SKQNAJ	タクトSW	LCD select 8(Down)		01
	SW119	**VV439800**	Tact Switch	SKQNAJ	タクトSW	DIRECT ACCESS		01
	SW120	**VV439800**	Tact Switch	SKQNAJ	タクトSW	EXIT		01
	TR001	**VK165500**	Digital Transistor	DTC123JS TP	デジタルトランジスタ			01
	-004	**VK165500**	Digital Transistor	DTC123JS TP	デジタルトランジスタ			01
	TR005	**VT455400**	Digital Transistor	DTB123YS TP	デジタルトランジスタ			01
	X001	**V4094000**	Ceramic Resonator	8.00M EFOMC8004T4	セラミック発振子			01
	X001	**V4100400**	Ceramic Resonator	8.00M EFOMC8004A4	セラミック発振子			02
*		**V5813900**	Circuit Board	PN3	PN3シート	(XW438B0)		
*		**V5814000**	Circuit Board	MV	MVシート	(XW438B0)		
	CN001	**VK015600**	Connector Base Post	PH-16P SE	コネクタベースポスト			01
	CN002	**VB858900**	Connector Base Post	PH-10P SE	コネクタベースポスト			01
	CN003	**VB858200**	Connector Base Post	PH- 3P SE	コネクタベースポスト			01
	CN004	**VC166500**	Connector Base Post	PH-12P SE	コネクタベースポスト			01
	CN301	**VB390400**	Connector Base Post	PH- 8P TE	コネクタベースポスト			01
	D001	**VB941200**	Diode	1SS133,1SS176	ダイオード			01
	-063	**VB941200**	Diode	1SS133,1SS176	ダイオード			01
	LE001	**VZ460300**	Photo Diode	SELU6814CTP5	発光ダイオード	VOICE EFFECT(TOUCH)		02
	LE002	**VZ460300**	Photo Diode	SELU6814CTP5	発光ダイオード	VOICE EFFECT(DSP 4-7)		02
	LE003	**VZ460300**	Photo Diode	SELU6814CTP5	発光ダイオード	VOICE EFFECT(HARMONY/ECHO		02
	LE004	**VZ460300**	Photo Diode	SELU6814CTP5	発光ダイオード	VOICE EFFECT(SUSTAIN)		02
	LE005	**VZ460300**	Photo Diode	SELU6814CTP5	発光ダイオード	VOICE EFFECT(SLOW/FAST)		02
	LE006	**VZ460300**	Photo Diode	SELU6814CTP5	発光ダイオード	VOICE EFFECT(POLY/MONO)		02
	LE007	**VG778600**	LED Green	SLZ290B-03-T2	LED	PART SELECT(LEFT)		01
	LE008	**VG778600**	LED Green	SLZ290B-03-T2	LED	PART SELECT(RIGHT1)		01
	LE009	**VG778600**	LED Green	SLZ290B-03-T2	LED	PART SELECT(RIGHT2)		01
	LE010	**VG778600**	LED Green	SLZ290B-03-T2	LED	PART SELECT(RIGHT3)		01
	LE011	**VD180000**	LED Red	SLZ-190B-03	LED	PART ON/OFF(LEFT HOLD)		01
	LE012	**VD180000**	LED Red	SLZ-190B-03	LED	PART ON/OFF(LEFT)		01
	LE013	**VD180000**	LED Red	SLZ-190B-03	LED	PART ON/OFF(RIGHT1)		01
	LE014	**VD180000**	LED Red	SLZ-190B-03	LED	PART ON/OFF(RIGHT2)		01
	LE015	**VD180000**	LED Red	SLZ-190B-03	LED	PART ON/OFF(RIGHT3)		01
	LE016	**VG778600**	LED Green	SLZ290B-03-T2	LED	PRESET VOICE(PIANO)		01
	LE017	**VG778600**	LED Green	SLZ290B-03-T2	LED	PRESET VOICE(E.PIANO)		01
	LE018	**VG778600**	LED Green	SLZ290B-03-T2	LED	PRESET VOICE(ORGAN)		01
	LE019	**VG778600**	LED Green	SLZ290B-03-T2	LED	PRESET VOICE(ACCORDION)		01
	LE020	**VG778600**	LED Green	SLZ290B-03-T2	LED	PRESET VOICE(GUITAR)		01
	LE021	**VG778600**	LED Green	SLZ290B-03-T2	LED	PRESET VOICE(STRINGS)		01
	LE022	**VG778600**	LED Green	SLZ290B-03-T2	LED	PRESET VOICE(TRUMPET)		01
	LE023	**VG778600**	LED Green	SLZ290B-03-T2	LED	PRESET VOICE(BRASS)		01
	LE024	**VG778600**	LED Green	SLZ290B-03-T2	LED	PRESET VOICE(SAXOPHONE)		01
	LE025	**VG778600**	LED Green	SLZ290B-03-T2	LED	PRESET VOICE(FLUTE)		01
	LE026	**VG778600**	LED Green	SLZ290B-03-T2	LED	PRESET VOICE(CHOIR&PAD)		01
	LE027	**VG778600**	LED Green	SLZ290B-03-T2	LED	PRESET VOICE(SYNTHESIZER)		01
	LE028	**VG778600**	LED Green	SLZ290B-03-T2	LED	PRESET VOICE(PERCUSSION)		01
	LE029	**VG778600**	LED Green	SLZ290B-03-T2	LED	PRESET VOICE(XG)		01
	LE030	**VG778600**	LED Green	SLZ290B-03-T2	LED	PRESET VOICE(ORGAN FLUTES		01
	LE031	**VG778600**	LED Green	SLZ290B-03-T2	LED	PRESET VOICE(CUSTOM VOICE		01
	LE032	**VZ460300**	Photo Diode	SELU6814CTP5	発光ダイオード	VOCAL HARMONY(TALK)		02
	LE033	**VZ460300**	Photo Diode	SELU6814CTP5	発光ダイオード	VOCAL HARMONY(DSP(8))		02
	LE034	**VZ460300**	Photo Diode	SELU6814CTP5	発光ダイオード	VOCAL HARMONY(V.H.(9))		02
	LE036	**VT659100**	LED Red	SLZ-174B-03-T1	LED	REGIST.MEMORY(FREEZE)		01
	R001	**HF456120**	Carbon Resistor	1.2K 1/4 J	カーボン抵抗			01
	R001	**HF756120**	Carbon Resistor	1.2K 1/4 J	カーボン抵抗			01
	R002	**HF456120**	Carbon Resistor	1.2K 1/4 J	カーボン抵抗			01
	R002	**HF756120**	Carbon Resistor	1.2K 1/4 J	カーボン抵抗			01
	R003	**HF456560**	Carbon Resistor	5.6K 1/4 J	カーボン抵抗			01
	R003	**HF756560**	Carbon Resistor	5.6K 1/4 J	カーボン抵抗			01

*: New Parts

RANK: Japan only

	REF NO.	PART NO.	DESCRIPTION		部品名	REMARKS	QTY	RANK
	R004	**HF456330**	Carbon Resistor	3.3K 1/4 J	カーボン抵抗			01
	R004	**HF756330**	Carbon Resistor	3.3K 1/4 J	カーボン抵抗			01
	R005	**HF455150**	Carbon Resistor	150.0 1/4 J	カーボン抵抗			01
	R005	**HF755150**	Carbon Resistor	150.0 1/4 J	カーボン抵抗			01
	SW001	**VV439800**	Tact Switch	SKQNAJ	タクトSW	LCD select(F)		01
	SW002	**VV439800**	Tact Switch	SKQNAJ	タクトSW	LCD select(G)		01
	SW003	**VV439800**	Tact Switch	SKQNAJ	タクトSW	LCD select(H)		01
	SW004	**VV439800**	Tact Switch	SKQNAJ	タクトSW	LCD select(I)		01
	SW005	**VV439800**	Tact Switch	SKQNAJ	タクトSW	LCD select(J)		01
*	*SW006	**VV600200**	Tact Switch	SKQNAHD010	タクトSW	VOICE EFFECT(TOUCH)		01
*	*SW007	**VV600200**	Tact Switch	SKQNAHD010	タクトSW	VOICE EFFECT(DSP 4-7)		01
*	*SW008	**VV600200**	Tact Switch	SKQNAHD010	タクトSW	VOICE EFFECT(HARMONY/ECHO		01
*	*SW009	**VV600200**	Tact Switch	SKQNAHD010	タクトSW	VOICE EFFECT(SUSTAIN)		01
*	*SW010	**VV600200**	Tact Switch	SKQNAHD010	タクトSW	VOICE EFFECT(SLOW/FAST)		01
*	*SW011	**VV600200**	Tact Switch	SKQNAHD010	タクトSW	VOICE EFFECT(POLY/MONO)		01
	SW012	**VV439800**	Tact Switch	SKQNAJ	タクトSW	DEMO		01
	SW013	**VV439800**	Tact Switch	SKQNAJ	タクトSW	PART SELECT(LEFT)		01
	SW014	**VV439800**	Tact Switch	SKQNAJ	タクトSW	PART SELECT(RIGHT1)		01
	SW015	**VV439800**	Tact Switch	SKQNAJ	タクトSW	PART SELECT(RIGHT2)		01
	SW016	**VV439800**	Tact Switch	SKQNAJ	タクトSW	PART SELECT(RIGHT3)		01
	SW017	**VV439800**	Tact Switch	SKQNAJ	タクトSW	PAGE CONTROL(BACK)		01
	SW018	**VV439800**	Tact Switch	SKQNAJ	タクトSW	PAGE CONTROL(NEXT)		01
	SW019	**VV439800**	Tact Switch	SKQNAJ	タクトSW	MUSIC DATABASE		01
	SW020	**VV439800**	Tact Switch	SKQNAJ	タクトSW	MUSIC DATABASE(1)		01
	SW021	**VV439800**	Tact Switch	SKQNAJ	タクトSW	MUSIC DATABASE(2)		01
	SW022	**VV439800**	Tact Switch	SKQNAJ	タクトSW	MUSIC DATABASE(3)		01
	SW023	**VV439800**	Tact Switch	SKQNAJ	タクトSW	MUSIC DATABASE(4)		01
	SW024	**VV439800**	Tact Switch	SKQNAJ	タクトSW	PART ON/OFF(LEFT HOLD)		01
	SW025	**VV439800**	Tact Switch	SKQNAJ	タクトSW	PART ON/OFF(LEFT)		01
	SW026	**VV439800**	Tact Switch	SKQNAJ	タクトSW	PART ON/OFF(RIGHT1)		01
	SW027	**VV439800**	Tact Switch	SKQNAJ	タクトSW	PART ON/OFF(RIGHT2)		01
	SW028	**VV439800**	Tact Switch	SKQNAJ	タクトSW	PART ON/OFF(RIGHT3)		01
	SW029	**VV439800**	Tact Switch	SKQNAJ	タクトSW	UPPER OCTAVE(-)		01
	SW030	**VV439800**	Tact Switch	SKQNAJ	タクトSW	UPPER OCTAVE(+)		01
	SW031	**VV439800**	Tact Switch	SKQNAJ	タクトSW	PRESET VOICE(PIANO)		01
	SW032	**VV439800**	Tact Switch	SKQNAJ	タクトSW	PRESET VOICE(E.PIANO)		01
	SW033	**VV439800**	Tact Switch	SKQNAJ	タクトSW	PRESET VOICE(ORGAN)		01
	SW034	**VV439800**	Tact Switch	SKQNAJ	タクトSW	PRESET VOICE(ACCORDION)		01
	SW035	**VV439800**	Tact Switch	SKQNAJ	タクトSW	PRESET VOICE(GUITAR)		01
	SW036	**VV439800**	Tact Switch	SKQNAJ	タクトSW	PRESET VOICE(STRINGS)		01
	SW037	**VV439800**	Tact Switch	SKQNAJ	タクトSW	PRESET VOICE(TRUMPET)		01
	SW038	**VV439800**	Tact Switch	SKQNAJ	タクトSW	PRESET VOICE(BRASS)		01
	SW039	**VV439800**	Tact Switch	SKQNAJ	タクトSW	PRESET VOICE(SAXOPHONE)		01
	SW040	**VV439800**	Tact Switch	SKQNAJ	タクトSW	PRESET VOICE(FLUTE)		01
	SW041	**VV439800**	Tact Switch	SKQNAJ	タクトSW	PRESET VOICE(CHOIR&PAD)		01
	SW042	**VV439800**	Tact Switch	SKQNAJ	タクトSW	PRESET VOICE(SYNTHESIZER)		01
	SW043	**VV439800**	Tact Switch	SKQNAJ	タクトSW	PRESET VOICE(PERCUSSION)		01
	SW044	**VV439800**	Tact Switch	SKQNAJ	タクトSW	PRESET VOICE(XG)		01
	SW045	**VV439800**	Tact Switch	SKQNAJ	タクトSW	PRESET VOICE(ORGAN FLUTES		01
	SW046	**VV439800**	Tact Switch	SKQNAJ	タクトSW	PRESET VOICE(CUSTOM VOICE		01
*	SW047	**VV600200**	Tact Switch	SKQNAHD010	タクトSW	VOCAL HARMONY(TALK)		01
*	SW048	**VV600200**	Tact Switch	SKQNAHD010	タクトSW	VOCAL HARMONY(DSP(8))		01
*	SW049	**VV600200**	Tact Switch	SKQNAHD010	タクトSW	VOCAL HARMONY(V.H.(9))		01
	SW050	**VV439800**	Tact Switch	SKQNAJ	タクトSW	VOCAL HARMONY(SELECT)		01
	SW051	**VV439800**	Tact Switch	SKQNAJ	タクトSW	VOCAL HARMONY(MIC SETUP)		01
	SW052	**VV439800**	Tact Switch	SKQNAJ	タクトSW	REGIST.MEMORY(FREEZE)		01
	SW053	**VV439800**	Tact Switch	SKQNAJ	タクトSW	REGIST.MEMORY(R.BANK -)		01
	SW054	**VV439800**	Tact Switch	SKQNAJ	タクトSW	REGIST.MEMORY(R.BANK +)		01
	SW055	**VV439800**	Tact Switch	SKQNAJ	タクトSW	REGISTRATION MEMORY(1)		01
	SW056	**VV439800**	Tact Switch	SKQNAJ	タクトSW	REGISTRATION MEMORY(2)		01
	SW057	**VV439800**	Tact Switch	SKQNAJ	タクトSW	REGISTRATION MEMORY(3)		01
	SW058	**VV439800**	Tact Switch	SKQNAJ	タクトSW	REGISTRATION MEMORY(4)		01
	SW059	**VV439800**	Tact Switch	SKQNAJ	タクトSW	REGISTRATION MEMORY(5)		01
	SW060	**VV439800**	Tact Switch	SKQNAJ	タクトSW	REGISTRATION MEMORY(6)		01
	SW061	**VV439800**	Tact Switch	SKQNAJ	タクトSW	REGISTRATION MEMORY(7)		01
	SW062	**VV439800**	Tact Switch	SKQNAJ	タクトSW	REGISTRATION MEMORY(8)		01
	SW063	**VV439800**	Tact Switch	SKQNAJ	タクトSW	MEMORY		01
	TH001	**VS696900**	Thermistor	ERTD2ZGJ202T 2K	サーミスタ			01
	TR001	**IC174070**	Transistor	2SC1740S R,S	トランジスタ			01
	VR001	**V3820700**	Rotary Variable Resistor	B 10K RK09K1130A5R	ロータリーVR 1連	LCD CONTRAST		01

*: New Parts

RANK: Japan only

	REF NO.	PART NO.	DESCRIPTION		部品名	REMARKS	QTY	RANK
	VR301	**VR531900**	Rotary Variable Resistor	A 10.0K RK14K12C0	二連ロータリーVR	MASTER VOLUME		03
	ZD001	**VP584900**	Zener Diode	MTZJ4.3B 4.3V	ツェナーダイオード			01
*		**V5882200**	Circuit Board	PN4	PN4シート	(XY586B0)		
		--	Jumper Wire	0.55	ジャンパー線	(VD04170)		
		--	GND Wire	4	アース線4	(V674760)		
	CN001	**VC166500**	Connector Base Post	PH-12P SE	コネクタベースポスト			01
	D0001	**VB941200**	Diode	1SS133,1SS176	ダイオード			01
	-0014	**VB941200**	Diode	1SS133,1SS176	ダイオード			01
	LD001	**VG778600**	LED Green	SLZ290B-03-T2	LED	Plug-In VOICE(1)		01
	LD002	**VG778600**	LED Green	SLZ290B-03-T2	LED	Plug-In VOICE(3)		01
	LD003	**VG778600**	LED Green	SLZ290B-03-T2	LED	Plug-In VOICE(5)		01
	LD004	**VG778600**	LED Green	SLZ290B-03-T2	LED	Plug-In VOICE(7)		01
	LD005	**VG778600**	LED Green	SLZ290B-03-T2	LED	Plug-In VOICE(9)		01
	LD006	**VG778600**	LED Green	SLZ290B-03-T2	LED	Plug-In VOICE(11)		01
	LD007	**VG778600**	LED Green	SLZ290B-03-T2	LED	Plug-In VOICE(2)		01
	LD008	**VG778600**	LED Green	SLZ290B-03-T2	LED	Plug-In VOICE(4)		01
	LD009	**VG778600**	LED Green	SLZ290B-03-T2	LED	Plug-In VOICE(6)		01
	LD010	**VG778600**	LED Green	SLZ290B-03-T2	LED	Plug-In VOICE(8)		01
	LD011	**VG778600**	LED Green	SLZ290B-03-T2	LED	Plug-In VOICE(10)		01
	LD012	**VG778600**	LED Green	SLZ290B-03-T2	LED	Plug-In VOICE(BOARD VOICE		01
	LD013	**VD180000**	LED Red	SLZ-190B-03	LED	Plug-In VOICE(SLOT 1)		01
	LD014	**VD180000**	LED Red	SLZ-190B-03	LED	Plug-In VOICE(SLOT 2)		01
	SW001	**VV439800**	Tact Switch	SKQNAJ	タクトSW	Plug-In VOICE(1)		01
	SW002	**VV439800**	Tact Switch	SKQNAJ	タクトSW	Plug-In VOICE(3)		01
	SW003	**VV439800**	Tact Switch	SKQNAJ	タクトSW	Plug-In VOICE(5)		01
	SW004	**VV439800**	Tact Switch	SKQNAJ	タクトSW	Plug-In VOICE(7)		01
	SW005	**VV439800**	Tact Switch	SKQNAJ	タクトSW	Plug-In VOICE(9)		01
	SW006	**VV439800**	Tact Switch	SKQNAJ	タクトSW	Plug-In VOICE(11)		01
	SW007	**VV439800**	Tact Switch	SKQNAJ	タクトSW	Plug-In VOICE(2)		01
	SW008	**VV439800**	Tact Switch	SKQNAJ	タクトSW	Plug-In VOICE(4)		01
	SW009	**VV439800**	Tact Switch	SKQNAJ	タクトSW	Plug-In VOICE(6)		01
	SW010	**VV439800**	Tact Switch	SKQNAJ	タクトSW	Plug-In VOICE(8)		01
	SW011	**VV439800**	Tact Switch	SKQNAJ	タクトSW	Plug-In VOICE(10)		01
	SW012	**VV439800**	Tact Switch	SKQNAJ	タクトSW	Plug-In VOICE(BOARD VOICE		01
	SW013	**VV439800**	Tact Switch	SKQNAJ	タクトSW	Plug-In VOICE(SLOT 1)		01
	SW014	**VV439800**	Tact Switch	SKQNAJ	タクトSW	Plug-In VOICE(SLOT 2)		01
*		**V6884400**	Circuit Board	PW	PWシート	(XZ692B0)		
	C0001	**UR828470**	Electrolytic Cap.	470.00 10.0V	ケミコン			01
	C0002	**US064100**	Ceramic Capacitor-B (Chip)	0.0100 50V K	チップセラ（B）			01
	-0005	**US064100**	Ceramic Capacitor-B (Chip)	0.0100 50V K	チップセラ（B）			01
	C0006	**UR828470**	Electrolytic Cap.	470.00 10.0V	ケミコン			01
	C0007	**UR828470**	Electrolytic Cap.	470.00 10.0V	ケミコン			01
	CN001	**VF283100**	Connector Base Post	PH-13P TE	コネクタベースポスト			01
	CN002	**VF283400**	Connector Base Post	PH-16P TE	コネクタベースポスト			01
	CN003	**VE352600**	Connector Base Post	PH-14P TE	コネクタベースポスト			01
	CN004	**VF283300**	Connector Base Post	PH-15P TE	コネクタベースポスト			01
*	IC001	**XZ648A00**	IC	PT5044	IC	DC/DC CONVERTER		
	IC002	**XS891A00**	IC	UPC29M05T-E1	IC	REGULATOR +5V		03
	IC003	**XS891A00**	IC	UPC29M05T-E1	IC	REGULATOR +5V		03
		V4271500	Circuit Board	SCSI	SCSIシート	(XW083C0)		08
	CN001	**VV331100**	Connector	230R(SCSI) 50P SE	コネクタFCN−235D	SCSI		05
	CN002	**VL536600**	Connector Header	HIF3FC-50PA2.54DSA	コネクタヘッダー			03
	L001	**RD250000**	Carbon Resistor (chip)	0.0 0.0 J	チップ抵抗			01
	-018	**RD250000**	Carbon Resistor (chip)	0.0 0.0 J	チップ抵抗			01
*		**V5790600**	Circuit Board	TG	TGシート	(XY734C0)		
		--	Locking Card Spacer	KGLS-24RT	ロッキングカードスペーサ	(VV22460)	4	
		VK863100	IC Socket	DICF-42CS-E	ICソケット			03
	C0001	**UF018100**	Electrolytic Cap. (chip)	100 6.3V	チップケミコン			01
	C0002	**US064100**	Ceramic Capacitor-B (chip)	0.0100 50V K	チップセラ（B）			01
	-0009	**US064100**	Ceramic Capacitor-B (chip)	0.0100 50V K	チップセラ（B）			01
	C0010	**US062470**	Ceramic Capacitor-SL(chip)	470P 50V J	チップセラ（SL）			01
	C0011	**US135100**	Ceramic Capacitor-F (chip)	0.1000 16V Z	チップセラ（F）			01
	C0012	**US061270**	Ceramic Capacitor-CH(chip)	27P 50V J	チップセラ（CH）			01
	C0013	**US061270**	Ceramic Capacitor-CH(chip)	27P 50V J	チップセラ（CH）			01
	C0014	**US064100**	Ceramic Capacitor-B (chip)	0.0100 50V K	チップセラ（B）			01
	-0016	**US064100**	Ceramic Capacitor-B (chip)	0.0100 50V K	チップセラ（B）			01

※: New Parts

RANK: Japan only

REF NO.	PART NO.	DESCRIPTION		部品名	REMARKS	QTY	RANK
C0017	**UF018100**	Electrolytic Cap. (chip)	100 6.3V	チップケミコン			01
C0018	**US064100**	Ceramic Capacitor-B (chip)	0.0100 50V K	チップセラ（B）			01
-0030	**US064100**	Ceramic Capacitor-B (chip)	0.0100 50V K	チップセラ（B）			01
C0031	**US135100**	Ceramic Capacitor-F (chip)	0.1000 16V Z	チップセラ（F）			01
C0032	**UF027220**	Electrolytic Cap. (chip)	22 10V	チップケミコン			01
C0033	**US064100**	Ceramic Capacitor-B (chip)	0.0100 50V K	チップセラ（B）			01
-0037	**US064100**	Ceramic Capacitor-B (chip)	0.0100 50V K	チップセラ（B）			01
C0038	**UF018100**	Electrolytic Cap. (chip)	100 6.3V	チップケミコン			01
C0039	**US064100**	Ceramic Capacitor-B (chip)	0.0100 50V K	チップセラ（B）			01
C0040	**US064100**	Ceramic Capacitor-B (chip)	0.0100 50V K	チップセラ（B）			01
C0041	**UF018100**	Electrolytic Cap. (chip)	100 6.3V	チップケミコン			01
C0042	**US064100**	Ceramic Capacitor-B (chip)	0.0100 50V K	チップセラ（B）			01
-0056	**US064100**	Ceramic Capacitor-B (chip)	0.0100 50V K	チップセラ（B）			01
C0057	**UF018100**	Electrolytic Cap. (chip)	100 6.3V	チップケミコン			01
C0058	**US064100**	Ceramic Capacitor-B (chip)	0.0100 50V K	チップセラ（B）			01
-0062	**US064100**	Ceramic Capacitor-B (chip)	0.0100 50V K	チップセラ（B）			01
C0063	**UF018100**	Electrolytic Cap. (chip)	100 6.3V	チップケミコン			01
C0064	**US064100**	Ceramic Capacitor-B (chip)	0.0100 50V K	チップセラ（B）			01
-0075	**US064100**	Ceramic Capacitor-B (chip)	0.0100 50V K	チップセラ（B）			01
C0076	**US061270**	Ceramic Capacitor-CH(chip)	27P 50V J	チップセラ（CH）			01
-0078	**US061270**	Ceramic Capacitor-CH(chip)	27P 50V J	チップセラ（CH）			01
C0079	**UF037100**	Electrolytic Cap. (chip)	10 16V	チップケミコン			01
C0080	**US064100**	Ceramic Capacitor-B (chip)	0.0100 50V K	チップセラ（B）			01
C0081	**US061270**	Ceramic Capacitor-CH(chip)	27P 50V J	チップセラ（CH）			01
C0082	**US064100**	Ceramic Capacitor-B (chip)	0.0100 50V K	チップセラ（B）			01
C0083	**US064100**	Ceramic Capacitor-B (chip)	0.0100 50V K	チップセラ（B）			01
C0084	**UF018100**	Electrolytic Cap. (chip)	100 6.3V	チップケミコン			01
C0085	**US064100**	Ceramic Capacitor-B (chip)	0.0100 50V K	チップセラ（B）			01
C0086	**UF018100**	Electrolytic Cap. (chip)	100 6.3V	チップケミコン			01
C0087	**US064100**	Ceramic Capacitor-B (chip)	0.0100 50V K	チップセラ（B）			01
-0098	**US064100**	Ceramic Capacitor-B (chip)	0.0100 50V K	チップセラ（B）			01
C0099	**UF018100**	Electrolytic Cap. (chip)	100 6.3V	チップケミコン			01
C0100	**US064100**	Ceramic Capacitor-B (chip)	0.0100 50V K	チップセラ（B）			01
-0104	**US064100**	Ceramic Capacitor-B (chip)	0.0100 50V K	チップセラ（B）			01
C0105	**UF018100**	Electrolytic Cap. (chip)	100 6.3V	チップケミコン			01
C0106	**US064100**	Ceramic Capacitor-B (chip)	0.0100 50V K	チップセラ（B）			01
-0117	**US064100**	Ceramic Capacitor-B (chip)	0.0100 50V K	チップセラ（B）			01
C0118	**UF038100**	Electrolytic Cap. (chip)	100 16V	チップケミコン			01
C0119	**UF066330**	Electrolytic Cap. (chip)	3.3 50V	チップケミコン			01
C0120	**UF038100**	Electrolytic Cap. (chip)	100 16V	チップケミコン			01
C0121	**US064100**	Ceramic Capacitor-B (chip)	0.0100 50V K	チップセラ（B）			01
C0122	**UF018100**	Electrolytic Cap. (chip)	100 6.3V	チップケミコン			01
C0123	**US064100**	Ceramic Capacitor-B (chip)	0.0100 50V K	チップセラ（B）			01
-0128	**US064100**	Ceramic Capacitor-B (chip)	0.0100 50V K	チップセラ（B）			01
C0129	**US061270**	Ceramic Capacitor-CH(chip)	27P 50V J	チップセラ（CH）			01
C0130	**US061270**	Ceramic Capacitor-CH(chip)	27P 50V J	チップセラ（CH）			01
C0131	**US064100**	Ceramic Capacitor-B (chip)	0.0100 50V K	チップセラ（B）			01
C0132	**US064100**	Ceramic Capacitor-B (chip)	0.0100 50V K	チップセラ（B）			01
C0133	**US061270**	Ceramic Capacitor-CH(chip)	27P 50V J	チップセラ（CH）			01
-0144	**US061270**	Ceramic Capacitor-CH(chip)	27P 50V J	チップセラ（CH）			01
C0145	**US064100**	Ceramic Capacitor-B (chip)	0.0100 50V K	チップセラ（B）			01
-0175	**US064100**	Ceramic Capacitor-B (chip)	0.0100 50V K	チップセラ（B）			01
C0179	**UF018100**	Electrolytic Cap. (chip)	100 6.3V	チップケミコン			01
C0180	**US064100**	Ceramic Capacitor-B (chip)	0.0100 50V K	チップセラ（B）			01
-0183	**US064100**	Ceramic Capacitor-B (chip)	0.0100 50V K	チップセラ（B）			01
C0184	**UF018100**	Electrolytic Cap. (chip)	100 6.3V	チップケミコン			01
C0185	**US064100**	Ceramic Capacitor-B (chip)	0.0100 50V K	チップセラ（B）			01
-0188	**US064100**	Ceramic Capacitor-B (chip)	0.0100 50V K	チップセラ（B）			01
C0214	**US064100**	Ceramic Capacitor-B (chip)	0.0100 50V K	チップセラ（B）			01
C0215	**UF128470**	Electrolytic Cap. (chip)	470 10V UUR1A4	チップケミコン			02
C0216	**UF038100**	Electrolytic Cap. (chip)	100 16V	チップケミコン			01
C0217	**US064100**	Ceramic Capacitor-B (chip)	0.0100 50V K	チップセラ（B）			01
C0218	**US064100**	Ceramic Capacitor-B (chip)	0.0100 50V K	チップセラ（B）			01
C0219	**UF038100**	Electrolytic Cap. (chip)	100 16V	チップケミコン			01
C0220	**US064100**	Ceramic Capacitor-B (chip)	0.0100 50V K	チップセラ（B）			01
C0221	**UF038100**	Electrolytic Cap. (chip)	100 16V	チップケミコン			01
C0222	**US064100**	Ceramic Capacitor-B (chip)	0.0100 50V K	チップセラ（B）			01
C0223	**UF138470**	Electrolytic Cap. (chip)	470 16V UUR1C4	チップケミコン			02
C0224	**US064100**	Ceramic Capacitor-B (chip)	0.0100 50V K	チップセラ（B）			01
C0225	**UF038100**	Electrolytic Cap. (chip)	100 16V	チップケミコン			01

✻: New Parts

RANK: Japan only

	REF NO.	PART NO.	DESCRIPTION		部品名	REMARKS	QTY	RANK
	C0226	**US064100**	Ceramic Capacitor-B (chip)	0.0100 50V K	チップセラ（B）			01
	C0227	**US064100**	Ceramic Capacitor-B (chip)	0.0100 50V K	チップセラ（B）			01
	C0228	**UF138470**	Electrolytic Cap. (chip)	470 16V UUR1C4	チップケミコン			02
	C0229	**UF038100**	Electrolytic Cap. (chip)	100 16V	チップケミコン			01
	C0230	**US064100**	Ceramic Capacitor-B (chip)	0.0100 50V K	チップセラ（B）			01
	-0233	**US064100**	Ceramic Capacitor-B (chip)	0.0100 50V K	チップセラ（B）			01
	C0236	**US064100**	Ceramic Capacitor-B (chip)	0.0100 50V K	チップセラ（B）			01
	C0239	**US064100**	Ceramic Capacitor-B (chip)	0.0100 50V K	チップセラ（B）			01
	C0240	**US061270**	Ceramic Capacitor-CH(chip)	27P 50V J	チップセラ（CH）			01
	C0241	**US061270**	Ceramic Capacitor-CH(chip)	27P 50V J	チップセラ（CH）			01
	C0346	**US061270**	Ceramic Capacitor-CH(chip)	27P 50V J	チップセラ（CH）			01
	C0347	**US064100**	Ceramic Capacitor-B (chip)	0.0100 50V K	チップセラ（B）			01
	C0348	**US064100**	Ceramic Capacitor-B (chip)	0.0100 50V K	チップセラ（B）			01
	C0349	**VL763100**	Electrolytic Cap.	6800 6.3	ケミコン			03
	C0350	**VL763100**	Electrolytic Cap.	6800 6.3	ケミコン			03
	C0351	**US135100**	Ceramic Capacitor-F (chip)	0.1000 16V Z	チップセラ（F）			01
	C0352	**US135100**	Ceramic Capacitor-F (chip)	0.1000 16V Z	チップセラ（F）			01
	CN001	**VB389800**	Connector Base Post	PH- 2P TE	コネクタベースポスト			01
	CN002	**--**	Connector	TX24 100P SE	基板用コネクタ	(V570380)		
	CN004	**VV345900**	SIMM Socket	SX3LB-72S-1.27DSA	SIMMソケット			04
	CN005	**VV345900**	SIMM Socket	SX3LB-72S-1.27DSA	SIMMソケット			04
	CN007	**VB390100**	Connector Base Post	PH- 5P TE	コネクタベースポスト			01
	CN009	**LB932090**	Base Post Connector	VH- 9P TE	ベースポスト			01
	CN010	**LB918020**	Base Post Connector	XH- 2P TE	ベースツキポスト			01
	CN011	**LB918060**	Base Post Connector	XH- 6P TE	ベースツキポスト			01
	CN012	**LB918040**	Base Post Connector	XH- 4P TE	ベースツキポスト			01
	CN013	**LB918050**	Base Post Connector	XH- 5P TE	ベースツキポスト			01
	CN014	**VE352600**	Connector Base Post	PH-14P TE	コネクタベースポスト			01
	CN015	**VF283300**	Connector Base Post	PH-15P TE	コネクタベースポスト			01
	CN021	**--**	Connector	TX25 30P TE	基板用コネクタ	(V582250)		
	EM001	**FZ006970**	LC Filter	LS MT Y223NB	LCフィルターEMI			02
	IC001	**XW795A00**	IC	HD6437043AE00F	IC	CPU (SUB)		11
	IC002	**XT013A00**	IC	YSS236-F	IC	VOP3		13
	IC003	**XM332A00**	IC	TC74VHC04F	IC	INVERTER		01
	IC003	**XY871A00**	IC	74VHC04SJX	IC			
	IC004	**XU462A00**	IC	MSM514260C-60TS-K	IC	DRAM 4M		08
*	IC004	**XW732A00**	IC	SDM4260CLTM-6S	IC			07
	IC005	**XS725A00**	IC	TC203C760HF-002	IC	SWP30B		19
	IC006	**XU462A00**	IC	MSM514260C-60TS-K	IC	DRAM 4M		08
*	IC006	**XW732A00**	IC	SDM4260CLTM-6S	IC			07
	IC007	**XS725A00**	IC	TC203C760HF-002	IC	SWP30B		19
	IC008	**XU462A00**	IC	MSM514260C-60TS-K	IC	DRAM 4M		08
*	IC008	**XW732A00**	IC	SDM4260CLTM-6S	IC			07
	IC009	**XS516A00**	IC	UPC2933T-E1	IC	REGULATOR +3.3V		03
	IC010	**XS516A00**	IC	UPC2933T-E1	IC	REGULATOR +3.3V		03
	IC011	**XS963A00**	IC	HD74LVC138FP	IC	DECODER		02
	IC011	**XT015A00**	IC	TC74VHC138F	IC			02
	IC011	**XY873A00**	IC	74VHC138SJX	IC			01
*	IC012	**XY810B00**	IC	E28F400B5-B60	IC	FLASH ROM 4M SUB PRG LOW		08
*	IC013	**XY811B00**	IC	E28F400B5-B60	IC	FLASH ROM 4M SUB PRG HIGH		08
*	IC014	**XY813100**	IC		IC	MASK ROM 16M RARAMETER		07
	IC015	**XU462A00**	IC	MSM514260C-60TS-K	IC	DRAM 4M		08
*	IC015	**XW732A00**	IC	SDM4260CLTM-6S	IC			07
	IC016	**XU462A00**	IC	MSM514260C-60TS-K	IC	DRAM 4M		08
*	IC016	**XW732A00**	IC	SDM4260CLTM-6S	IC			07
	IC017	**XW154A00**	IC	SLA904FF1T	IC	PARAREL INTERFACE		05
	IC018	**XS049A00**	IC	HD74LVC541AFPEL	IC	BUFFER		03
*	IC018	**XY961A00**	IC	74VHC541SJX	IC			
	IC019	**XS370A00**	IC	D65621GF-028-3B9	IC	SMI		06
	IC020	**XT487A00**	IC	TC74VHC245F	IC	TRANSCEIVER		03
	-023	**XT487A00**	IC	TC74VHC245F	IC			03
	IC020	**XY874A00**	IC	74VHC245SJX	IC			
	-023	**XY874A00**	IC	74VHC245SJX	IC			
	IC024	**XY306A00**	IC	74VHC32SJX	IC	OR		01
	IC024	**XY537A00**	IC	TC74VHC32F(EL)	IC			01
	IC025	**XT487A00**	IC	TC74VHC245F	IC	TRANSCEIVER		03
	-033	**XT487A00**	IC	TC74VHC245F	IC			03
	IC025	**XY874A00**	IC	74VHC245SJX	IC			
	-033	**XY874A00**	IC	74VHC245SJX	IC			
	IC034	**XW763200**	IC	MX23C6410MC-10	IC	MASK ROM 64M WAVE1 LOW		11

*: New Parts

RANK: Japan only

	REF NO.	PART NO.	DESCRIPTION		部品名	REMARKS	QTY	RANK
	IC035	**XW764200**	IC	MX23C6410MC-10	IC	MASK ROM 64M WAVE1 HIGH		11
	IC036	**XW765100**	IC	MX23C6410MC-10	IC	MASK ROM 64M WAVE2 LOW		11
	IC037	**XW766100**	IC	MX23C6410MC-10	IC	MASK ROM 64M WAVE2 HIGH		11
*	IC038	**XY814100**	IC	MX23C6410MC-10	IC	MASK ROM 64M WAVE3 LOW		10
*	IC039	**XY815100**	IC	MX23C6410MC-10	IC	MASK ROM 64M WAVE3 HIGH		10
	IC040	**XS963A00**	IC	HD74LVC138FP	IC	DECODER		02
	IC040	**XT015A00**	IC	TC74VHC138F	IC			02
	IC040	**XY873A00**	IC	74VHC138SJX	IC			01
	IC041	**XS963A00**	IC	HD74LVC138FP	IC	DECODER		02
	IC041	**XT015A00**	IC	TC74VHC138F	IC			02
	IC041	**XY873A00**	IC	74VHC138SJX	IC			01
	IC042	**XU462A00**	IC	MSM514260C-60TS-K	IC	DRAM 4M		08
*	IC042	**XW732A00**	IC	SDM4260CLTM-6S	IC			07
	IC043	**XU462A00**	IC	MSM514260C-60TS-K	IC	DRAM 4M		08
*	IC043	**XW732A00**	IC	SDM4260CLTM-6S	IC			07
	IC047	**XL094A00**	IC	HD74HC14FPEL	IC	INVERTER		02
	IC047	**XW104A00**	IC	MM74HC14SJX	IC			01
	IC048	**XS720A00**	IC	TC74HC245AF	IC	TRANSCEIVER		03
	IC048	**XW107A00**	IC	MM74HC245ASJX	IC			03
	IC049	**XT487A00**	IC	TC74VHC245F	IC	TRANSCEIVER		03
	IC049	**XY874A00**	IC	74VHC245SJX	IC			
	L0002	**VT872900**	Chip Inductance	0.22U LEM2520TR22K	チップインダクタ			01
	-0008	**VT872900**	Chip Inductance	0.22U LEM2520TR22K	チップインダクタ			01
*	L0009	**V5848100**	Chip Inductance	56U ELJFC560JF	巻線チップインダクタ			01
*	-0012	**V5848100**	Chip Inductance	56U ELJFC560JF	巻線チップインダクタ			01
	L0032	**VT872900**	Chip Inductance	0.22U LEM2520TR22K	チップインダクタ			01
	L0033	**VT872900**	Chip Inductance	0.22U LEM2520TR22K	チップインダクタ			01
	L0034	**GE300670**	Ferrite Bead	BL02RN2-R62T4	フェライトビーズ			02
	L0035	**GE300670**	Ferrite Bead	BL02RN2-R62T4	フェライトビーズ			02
	R0001	**RD350000**	Carbon Resistor (chip)	0 63M J	チップ抵抗			01
	R0002	**RD357100**	Carbon Resistor (chip)	10K 63M J	チップ抵抗			01
	R0003	**RD354100**	Carbon Resistor (chip)	10 63M J	チップ抵抗			01
	R0004	**RD350000**	Carbon Resistor (chip)	0 63M J	チップ抵抗			01
	R0006	**RD354100**	Carbon Resistor (chip)	10 63M J	チップ抵抗			01
	-0023	**RD354100**	Carbon Resistor (chip)	10 63M J	チップ抵抗			01
	R0024	**RD350000**	Carbon Resistor (chip)	0 63M J	チップ抵抗			01
	R0025	**RD354100**	Carbon Resistor (chip)	10 63M J	チップ抵抗			01
	R0026	**RD354100**	Carbon Resistor (chip)	10 63M J	チップ抵抗			01
	R0027	**RD350000**	Carbon Resistor (chip)	0 63M J	チップ抵抗			01
	R0028	**RD354100**	Carbon Resistor (chip)	10 63M J	チップ抵抗			01
	R0029	**RD354100**	Carbon Resistor (chip)	10 63M J	チップ抵抗			01
	R0030	**RD358100**	Carbon Resistor (chip)	100K 63M J	チップ抵抗			01
	-0034	**RD358100**	Carbon Resistor (chip)	100K 63M J	チップ抵抗			01
	R0035	**RD354100**	Carbon Resistor (chip)	10 63M J	チップ抵抗			01
	-0038	**RD354100**	Carbon Resistor (chip)	10 63M J	チップ抵抗			01
	R0039	**RD356270**	Carbon Resistor (chip)	2.7K 63M J	チップ抵抗			01
	R0040	**RD356270**	Carbon Resistor (chip)	2.7K 63M J	チップ抵抗			01
	R0041	**RD358100**	Carbon Resistor (chip)	100K 63M J	チップ抵抗			01
	R0042	**RD358100**	Carbon Resistor (chip)	100K 63M J	チップ抵抗			01
	R0043	**RD350000**	Carbon Resistor (chip)	0 63M J	チップ抵抗			01
	-0056	**RD350000**	Carbon Resistor (chip)	0 63M J	チップ抵抗			01
	R0057	**RD357100**	Carbon Resistor (chip)	10K 63M J	チップ抵抗			01
	R0058	**RD350000**	Carbon Resistor (chip)	0 63M J	チップ抵抗			01
	R0059	**RD356330**	Carbon Resistor (chip)	3.3K 63M J	チップ抵抗			01
	R0060	**RD355220**	Carbon Resistor (chip)	220 63M J	チップ抵抗			01
	R0061	**RD350000**	Carbon Resistor (chip)	0 63M J	チップ抵抗			01
	-0063	**RD350000**	Carbon Resistor (chip)	0 63M J	チップ抵抗			01
	R0064	**RD354100**	Carbon Resistor (chip)	10 63M J	チップ抵抗			01
	R0065	**RD358100**	Carbon Resistor (chip)	100K 63M J	チップ抵抗			01
	R0066	**RD354100**	Carbon Resistor (chip)	10 63M J	チップ抵抗			01
	-0069	**RD354100**	Carbon Resistor (chip)	10 63M J	チップ抵抗			01
	R0070	**RD358100**	Carbon Resistor (chip)	100K 63M J	チップ抵抗			01
	R0071	**RD358100**	Carbon Resistor (chip)	100K 63M J	チップ抵抗			01
	R0072	**RD354100**	Carbon Resistor (chip)	10 63M J	チップ抵抗			01
	R0073	**RD354100**	Carbon Resistor (chip)	10 63M J	チップ抵抗			01
	R0074	**RD358100**	Carbon Resistor (chip)	100K 63M J	チップ抵抗			01
	R0075	**RD358100**	Carbon Resistor (chip)	100K 63M J	チップ抵抗			01
	R0076	**RD357100**	Carbon Resistor (chip)	10K 63M J	チップ抵抗			01
	R0077	**RD357100**	Carbon Resistor (chip)	10K 63M J	チップ抵抗			01
	R0078	**RD356680**	Carbon Resistor (chip)	6.8K 63M J	チップ抵抗			01

*: New Parts

RANK: Japan only

REF NO.	PART NO.	DESCRIPTION		部品名	REMARKS	QTY	RANK
R0079	**RD356100**	Carbon Resistor (chip)	1.0K 63M J	チップ抵抗			01
R0080	**RD355100**	Carbon Resistor (chip)	100 63M J	チップ抵抗			01
R0081	**RD355100**	Carbon Resistor (chip)	100 63M J	チップ抵抗			01
R0082	**RD354100**	Carbon Resistor (chip)	10 63M J	チップ抵抗			01
-0097	**RD354100**	Carbon Resistor (chip)	10 63M J	チップ抵抗			01
R0098	**RD355100**	Carbon Resistor (chip)	100 63M J	チップ抵抗			01
-0105	**RD355100**	Carbon Resistor (chip)	100 63M J	チップ抵抗			01
R0106	**RD354680**	Carbon Resistor (chip)	68 63M J	チップ抵抗			01
-0114	**RD354680**	Carbon Resistor (chip)	68 63M J	チップ抵抗			01
R0115	**RD354100**	Carbon Resistor (chip)	10 63M J	チップ抵抗			01
R0116	**RD354100**	Carbon Resistor (chip)	10 63M J	チップ抵抗			01
R0117	**RD354470**	Carbon Resistor (chip)	47 63M J	チップ抵抗			01
R0118	**RD355100**	Carbon Resistor (chip)	100 63M J	チップ抵抗			01
R0119	**RD354100**	Carbon Resistor (chip)	10 63M J	チップ抵抗			01
R0120	**RD354100**	Carbon Resistor (chip)	10 63M J	チップ抵抗			01
R0121	**RD354470**	Carbon Resistor (chip)	47 63M J	チップ抵抗			01
R0122	**RD355100**	Carbon Resistor (chip)	100 63M J	チップ抵抗			01
R0123	**RD354100**	Carbon Resistor (chip)	10 63M J	チップ抵抗			01
-0125	**RD354100**	Carbon Resistor (chip)	10 63M J	チップ抵抗			01
R0126	**RD355100**	Carbon Resistor (chip)	100 63M J	チップ抵抗			01
-0129	**RD355100**	Carbon Resistor (chip)	100 63M J	チップ抵抗			01
R0130	**RD357100**	Carbon Resistor (chip)	10K 63M J	チップ抵抗			01
R0131	**RD354100**	Carbon Resistor (chip)	10 63M J	チップ抵抗			01
R0132	**RD356470**	Carbon Resistor (chip)	4.7K 63M J	チップ抵抗			01
R0133	**RD356470**	Carbon Resistor (chip)	4.7K 63M J	チップ抵抗			01
R0134	**RD354100**	Carbon Resistor (chip)	10 63M J	チップ抵抗			01
R0135	**RD358470**	Carbon Resistor (chip)	470K 63M J	チップ抵抗			01
-0139	**RD358470**	Carbon Resistor (chip)	470K 63M J	チップ抵抗			01
R0140	**RD356470**	Carbon Resistor (chip)	4.7K 63M J	チップ抵抗			01
R0141	**RD358470**	Carbon Resistor (chip)	470K 63M J	チップ抵抗			01
R0142	**RD354680**	Carbon Resistor (chip)	68 63M J	チップ抵抗			01
R0143	**RD354680**	Carbon Resistor (chip)	68 63M J	チップ抵抗			01
R0144	**RD354330**	Carbon Resistor (chip)	33 63M J	チップ抵抗			01
-0159	**RD354330**	Carbon Resistor (chip)	33 63M J	チップ抵抗			01
R0160	**RD354680**	Carbon Resistor (chip)	68 63M J	チップ抵抗			01
-0171	**RD354680**	Carbon Resistor (chip)	68 63M J	チップ抵抗			01
R0172	**RD354330**	Carbon Resistor (chip)	33 63M J	チップ抵抗			01
-0185	**RD354330**	Carbon Resistor (chip)	33 63M J	チップ抵抗			01
R0186	**RD354100**	Carbon Resistor (chip)	10 63M J	チップ抵抗			01
R0187	**RD354680**	Carbon Resistor (chip)	68 63M J	チップ抵抗			01
R0188	**RD355680**	Carbon Resistor (chip)	680 63M J	チップ抵抗			01
R0191	**RD357100**	Carbon Resistor (chip)	10K 63M J	チップ抵抗			01
-0222	**RD357100**	Carbon Resistor (chip)	10K 63M J	チップ抵抗			01
R0223	**RD354100**	Carbon Resistor (chip)	10 63M J	チップ抵抗			01
R0224	**RD355100**	Carbon Resistor (chip)	100 63M J	チップ抵抗			01
-0255	**RD355100**	Carbon Resistor (chip)	100 63M J	チップ抵抗			01
R0256	**RD354100**	Carbon Resistor (chip)	10 63M J	チップ抵抗			01
R0257	**RD354100**	Carbon Resistor (chip)	10 63M J	チップ抵抗			01
R0258	**RD354470**	Carbon Resistor (chip)	47 63M J	チップ抵抗			01
R0259	**RD354470**	Carbon Resistor (chip)	47 63M J	チップ抵抗			01
R0260	**RD355100**	Carbon Resistor (chip)	100 63M J	チップ抵抗			01
-0266	**RD355100**	Carbon Resistor (chip)	100 63M J	チップ抵抗			01
R0267	**RD357100**	Carbon Resistor (chip)	10K 63M J	チップ抵抗			01
R0268	**RD357100**	Carbon Resistor (chip)	10K 63M J	チップ抵抗			01
R0286	**RD357100**	Carbon Resistor (chip)	10K 63M J	チップ抵抗			01
-0289	**RD357100**	Carbon Resistor (chip)	10K 63M J	チップ抵抗			01
R0290	**RD355180**	Carbon Resistor (chip)	180 63M J	チップ抵抗			01
-0293	**RD355180**	Carbon Resistor (chip)	180 63M J	チップ抵抗			01
R0294	**RD357220**	Carbon Resistor (chip)	22K 63M J	チップ抵抗			01
-0297	**RD357220**	Carbon Resistor (chip)	22K 63M J	チップ抵抗			01
R0298	**RD355180**	Carbon Resistor (chip)	180 63M J	チップ抵抗			01
R0299	**RD357220**	Carbon Resistor (chip)	22K 63M J	チップ抵抗			01
-0302	**RD357220**	Carbon Resistor (chip)	22K 63M J	チップ抵抗			01
R0303	**RD355180**	Carbon Resistor (chip)	180 63M J	チップ抵抗			01
-0307	**RD355180**	Carbon Resistor (chip)	180 63M J	チップ抵抗			01
R0308	**RD354100**	Carbon Resistor (chip)	10 63M J	チップ抵抗			01
-0311	**RD354100**	Carbon Resistor (chip)	10 63M J	チップ抵抗			01
R0312	**RD355100**	Carbon Resistor (chip)	100 63M J	チップ抵抗			01
R0313	**RD355180**	Carbon Resistor (chip)	180 63M J	チップ抵抗			01
R0314	**RD355100**	Carbon Resistor (chip)	100 63M J	チップ抵抗			01

※: New Parts

RANK: Japan only

	REF NO.	PART NO.	DESCRIPTION		部品名	REMARKS	QTY	RANK
	R0315	**RD355100**	Carbon Resistor (chip)	100 63M J	チップ抵抗			01
	R0316	**RD355180**	Carbon Resistor (chip)	180 63M J	チップ抵抗			01
	R0317	**RD355100**	Carbon Resistor (chip)	100 63M J	チップ抵抗			01
	R0318	**RD354100**	Carbon Resistor (chip)	10 63M J	チップ抵抗			01
	R0319	**RD354100**	Carbon Resistor (chip)	10 63M J	チップ抵抗			01
	R0356	**RD250000**	Carbon Resistor (chip)	0.0 0.0 J	チップ抵抗			01
	R0357	**RD250000**	Carbon Resistor (chip)	0.0 0.0 J	チップ抵抗			01
	R0358	**RD357100**	Carbon Resistor (chip)	10K 63M J	チップ抵抗			01
	-0362	**RD357100**	Carbon Resistor (chip)	10K 63M J	チップ抵抗			01
	R0365	**RD354680**	Carbon Resistor (chip)	68 63M J	チップ抵抗			01
	R0367	**RD354680**	Carbon Resistor (chip)	68 63M J	チップ抵抗			01
	R0368	**RD354680**	Carbon Resistor (chip)	68 63M J	チップ抵抗			01
	R0369	**RD358470**	Carbon Resistor (chip)	470K 63M J	チップ抵抗			01
	X0001	**VV335600**	Quartz Crystal Unit	33.8688MHz DSO751S	水晶発振器			06
	X0002	**VV762900**	Quartz Crystal Unit	7MHz SMD-49	水晶振動子			03
*		**V5557500**	Power Supply Unit	CE,U,CS	電源ユニット			
		V3331300	LCD	EDMMPU3BCF	液晶ディスプレイ			23
		V5667800	Floppy Disk Drive Black	1M/2M 359M3	３．５″ＦＤＤ ミツミ			15
		VL785200	AC-IN Connector	AC-P01CR02	ＡＣインレット	AC INLET		03
⚠ *		**V6033400**	Power Switch	JW-M21RKK U.C.V.	シーソーＳＷ	POWER ON/OFF		06
⚠		**V3311600**	Capacitor-KH	0.010 250V J.U.C.S	規格認定コン ＫＨ			01
⚠ *		**V6190700**	AC Cord	VDE	電源コード	E		08
⚠ *		**V6190600**	AC Cord	CSA	電源コード	U		07
⚠		**VP204400**	AC Cord	BS 3	電源コード	B		10

*: New Parts

RANK: Japan only

CIRCUIT BOARDS

AM Circuit Board (XY703C0) 36,37
INV Circuit Board (XT122A0) 37
DM Circuit Board (XY733C0) 38-41
DJACK Circuit Board (XV936B0) 38,39
AJACK Circuit Board (XV936B0) 40,41
TG Circuit Board (XY734C0) 42-45
AJACK2 Circuit Board (XY645B0) 42
SCSI Circuit Board (XW083C0) 43
PN2 Circuit Board (XW443B0) 44,45
PN4 Circuit Board (XY586B0) 46
PN1 Circuit Board (XW443B0) 46-49
MV Circuit Board (XW438B0) 47
LED Circuit Board (XY704C0) 47
MIC/VR Circuit Board (XY704C0) 48
MIC/HP Circuit Board (XY704C0) 49
EN Circuit Board (XW443B0) 50
PN3 Circuit Board (XW438B0) 50-53
DA Circuit Board (XY836C0) 51,52
PW Circuit Board (XZ692B0) 53

• AM Circuit Board

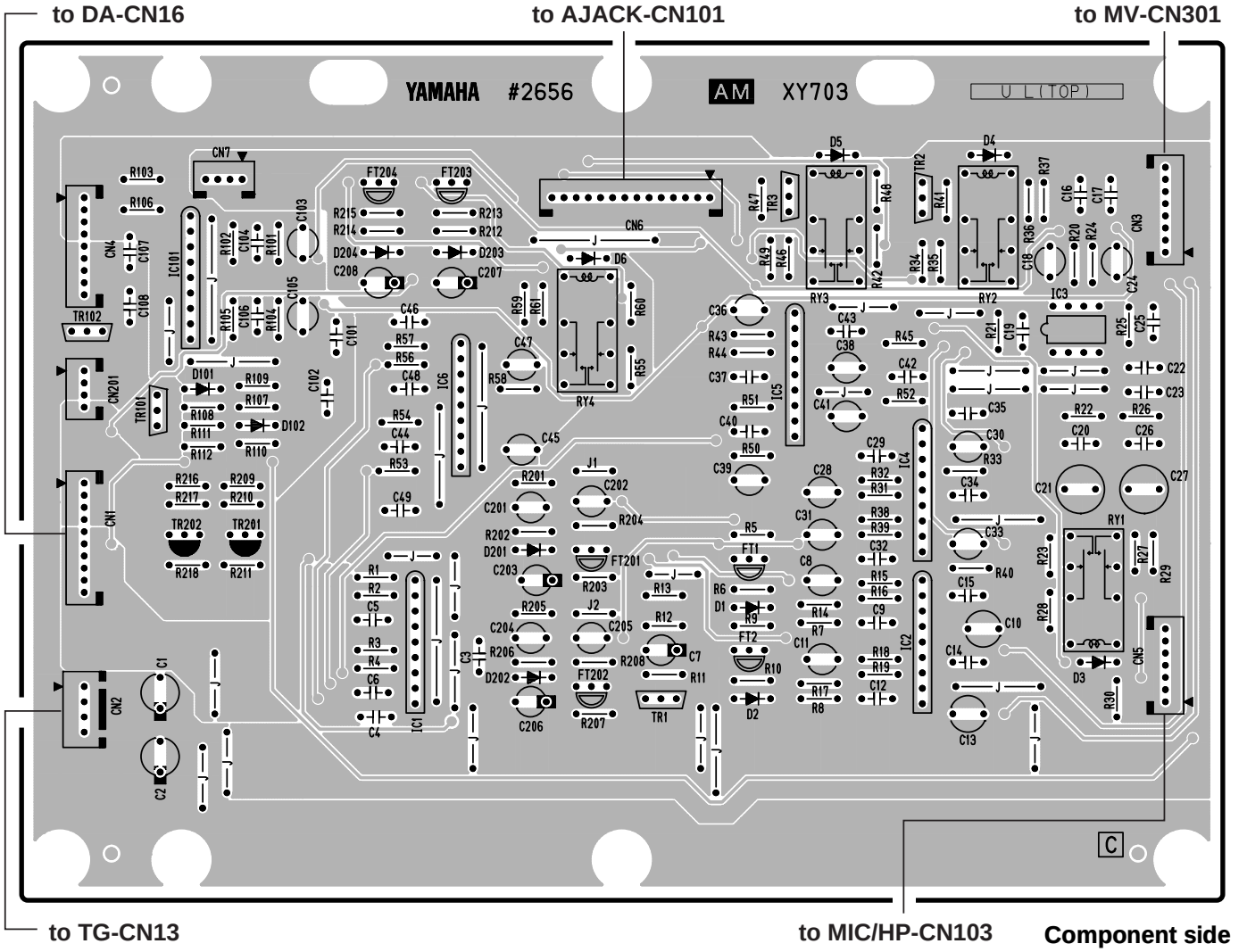

Note : See parts list for details of circuit board component parts.

AM: 2NA-V582980

• INV Circuit Board

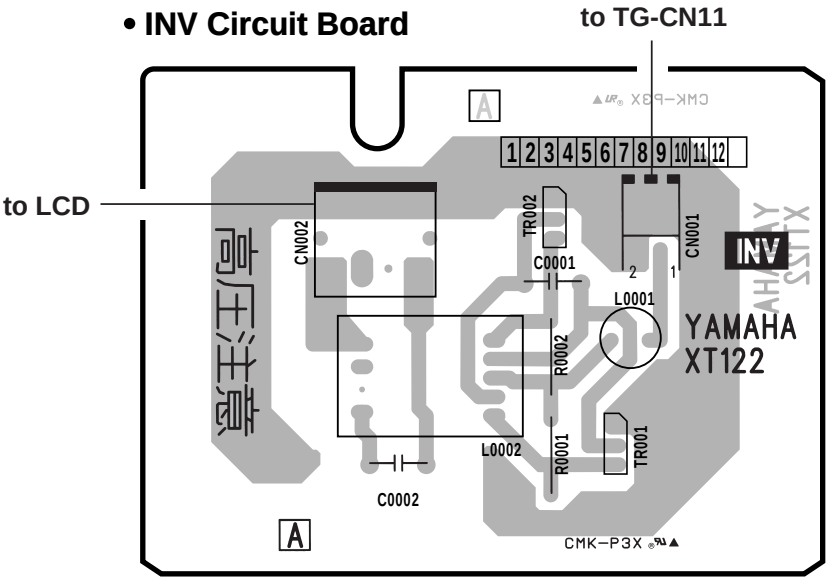

Component side

• AM Circuit Board

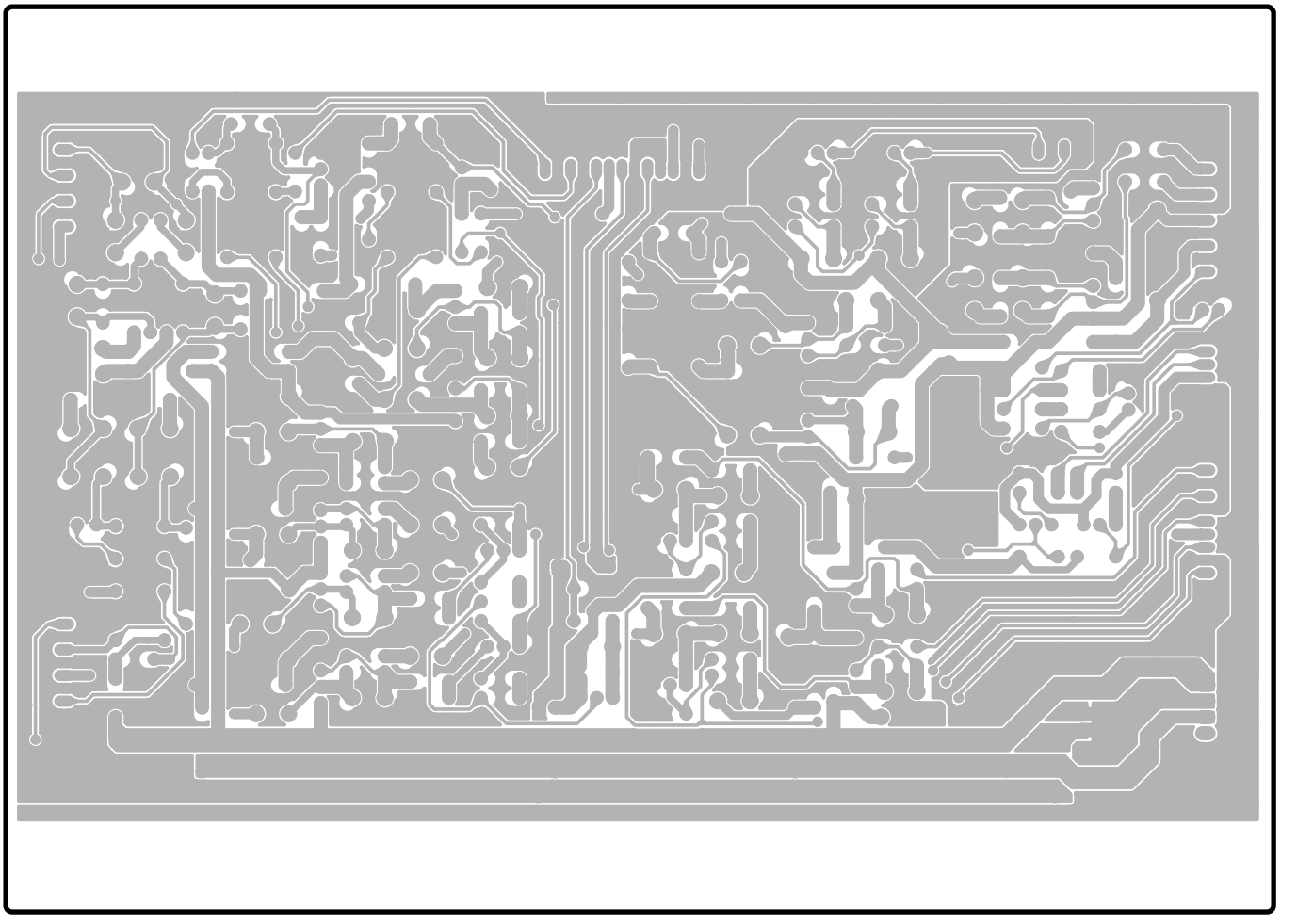

Pattern side

INV: VY63890
AM: 2NA-V582980

• DM Circuit Board

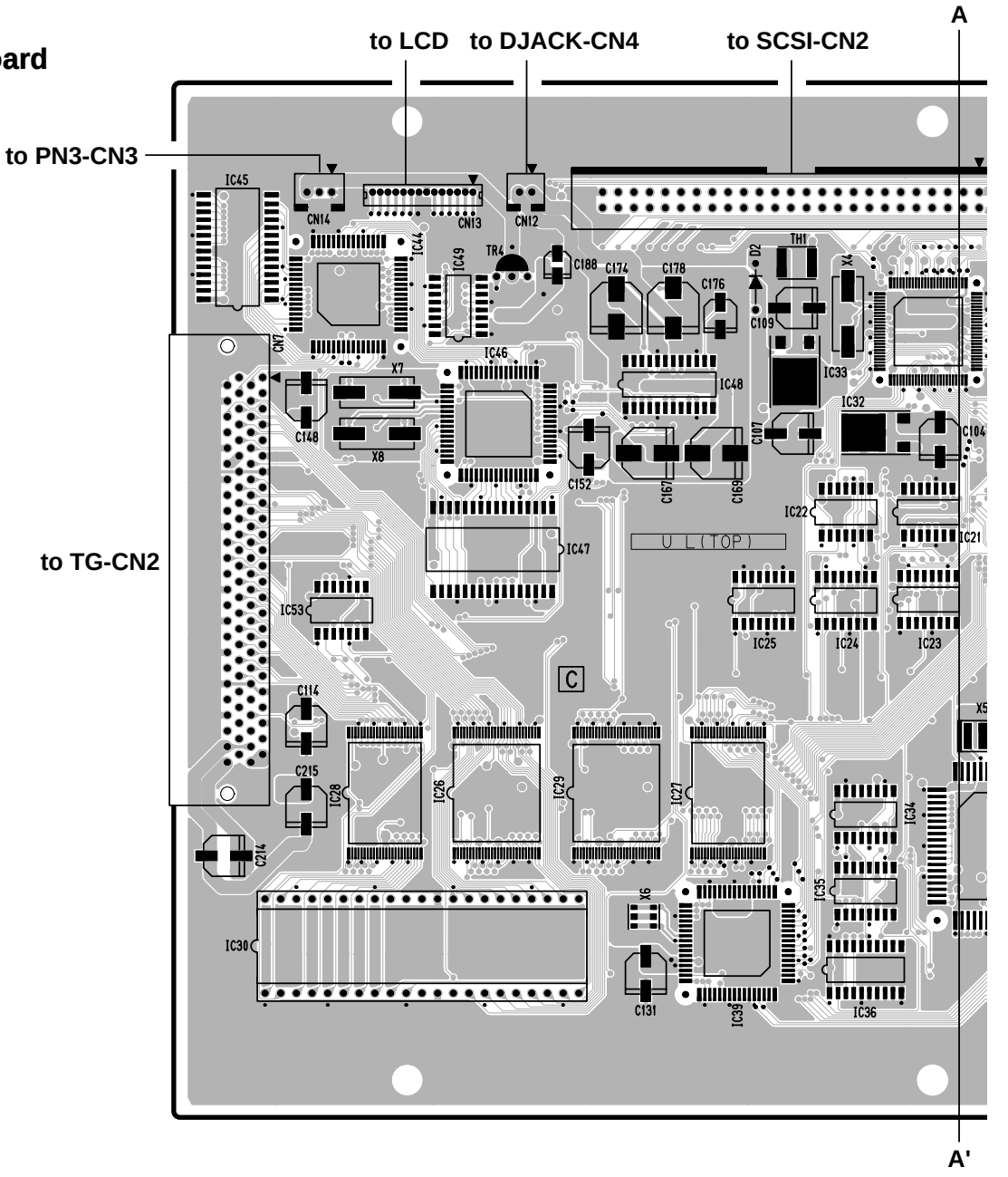

• DJACK Circuit Board

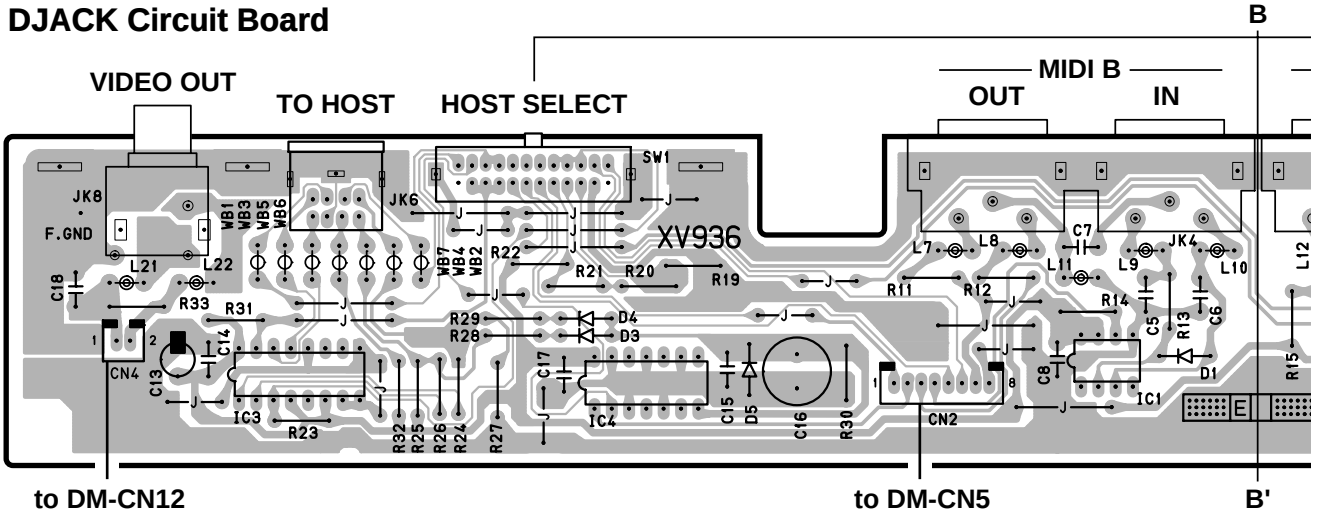

DM: 2NA-V579050-1
DJACK: 2NA-V357900-1 ⚠5

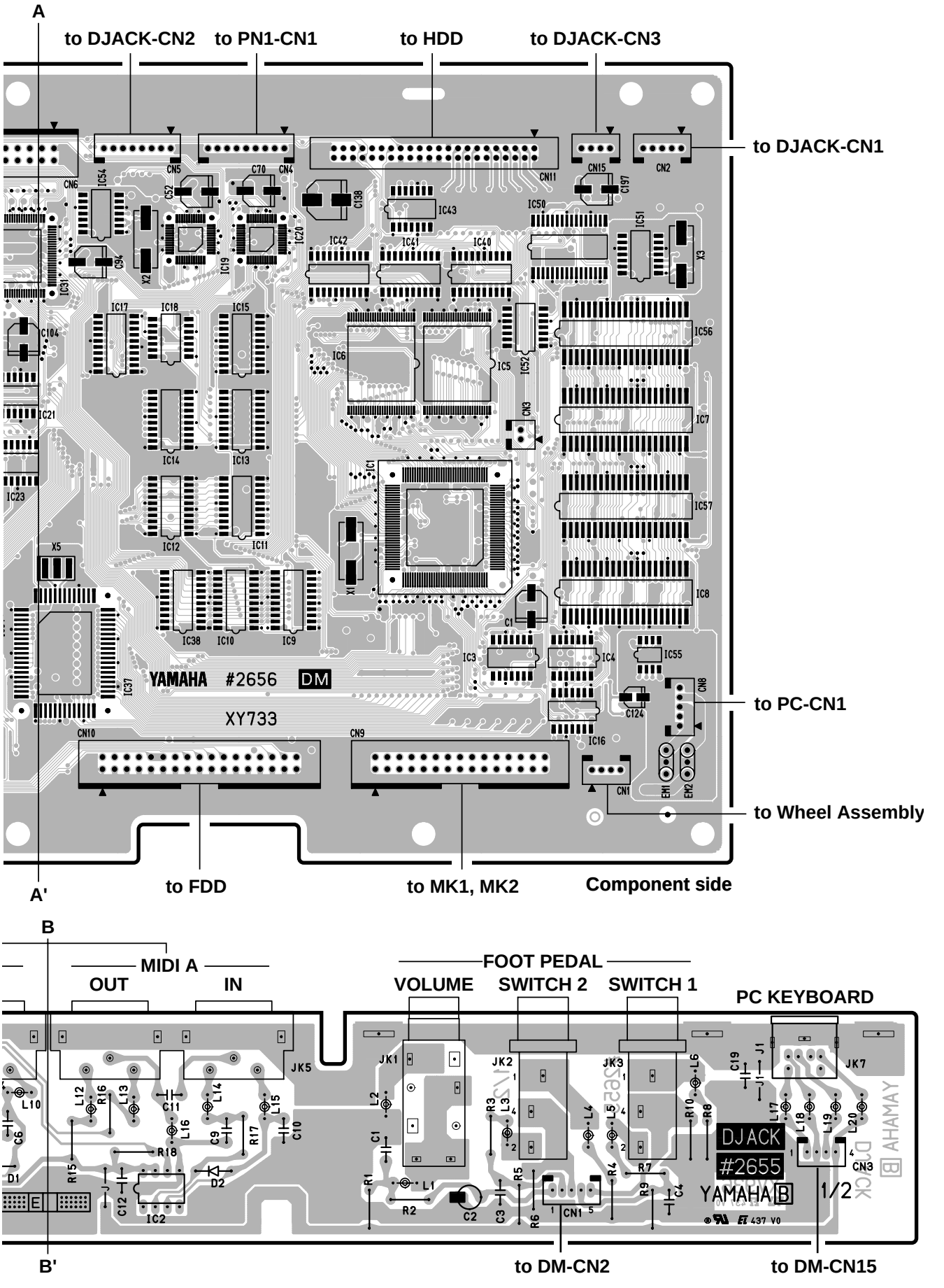

DM: 2NA-V579050-1

DJACK: 2NA-V357900-1 ⚠5

• DM Circuit Board

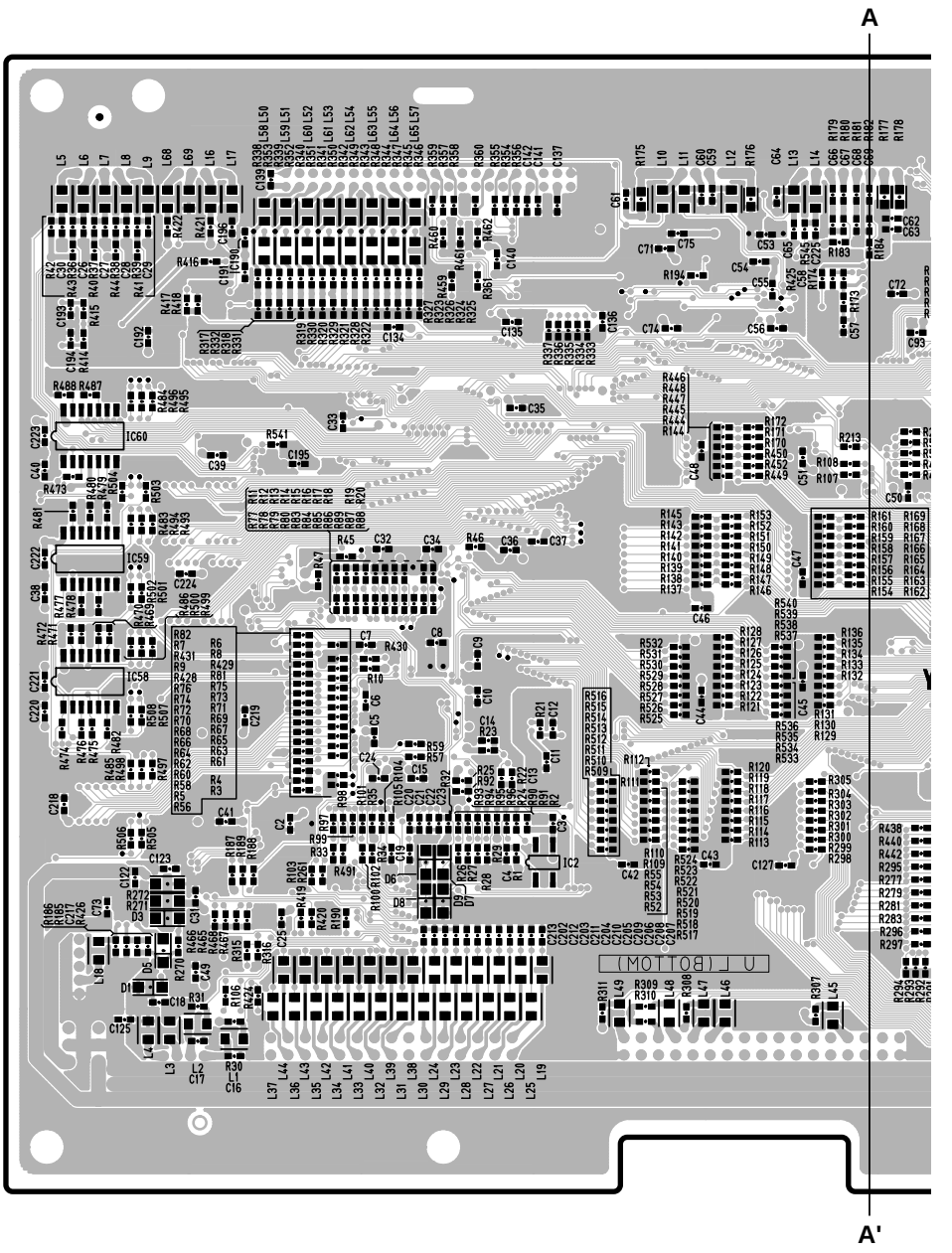

• AJACK Circuit Board

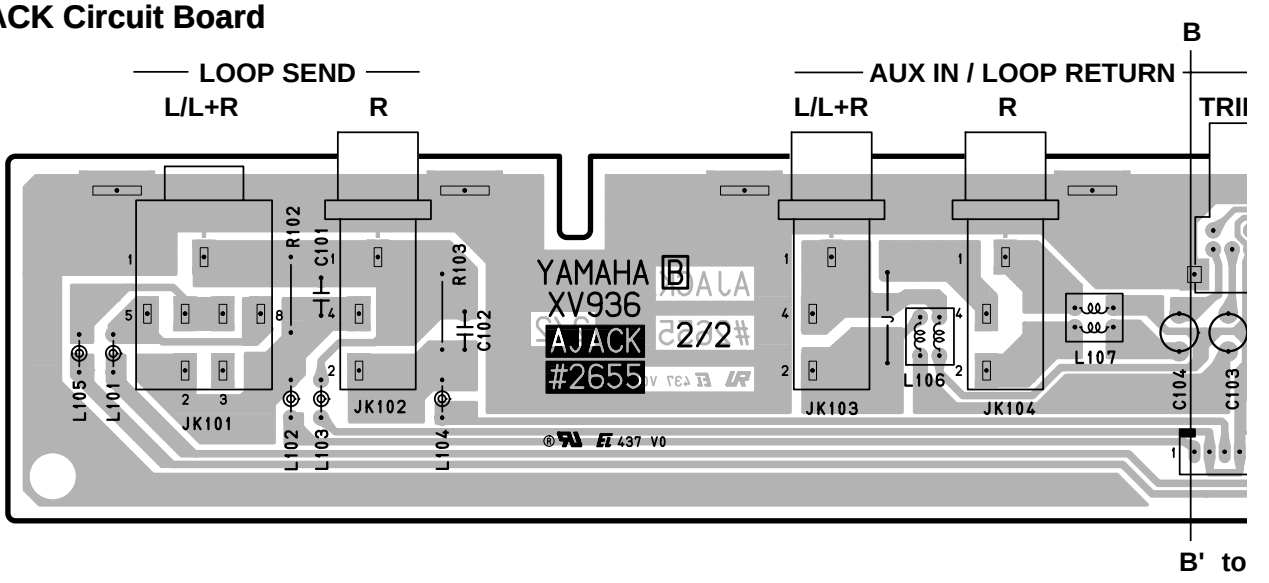

DM: 2NA-V579050-2

AJACK: 2NA-V357900-3 △5

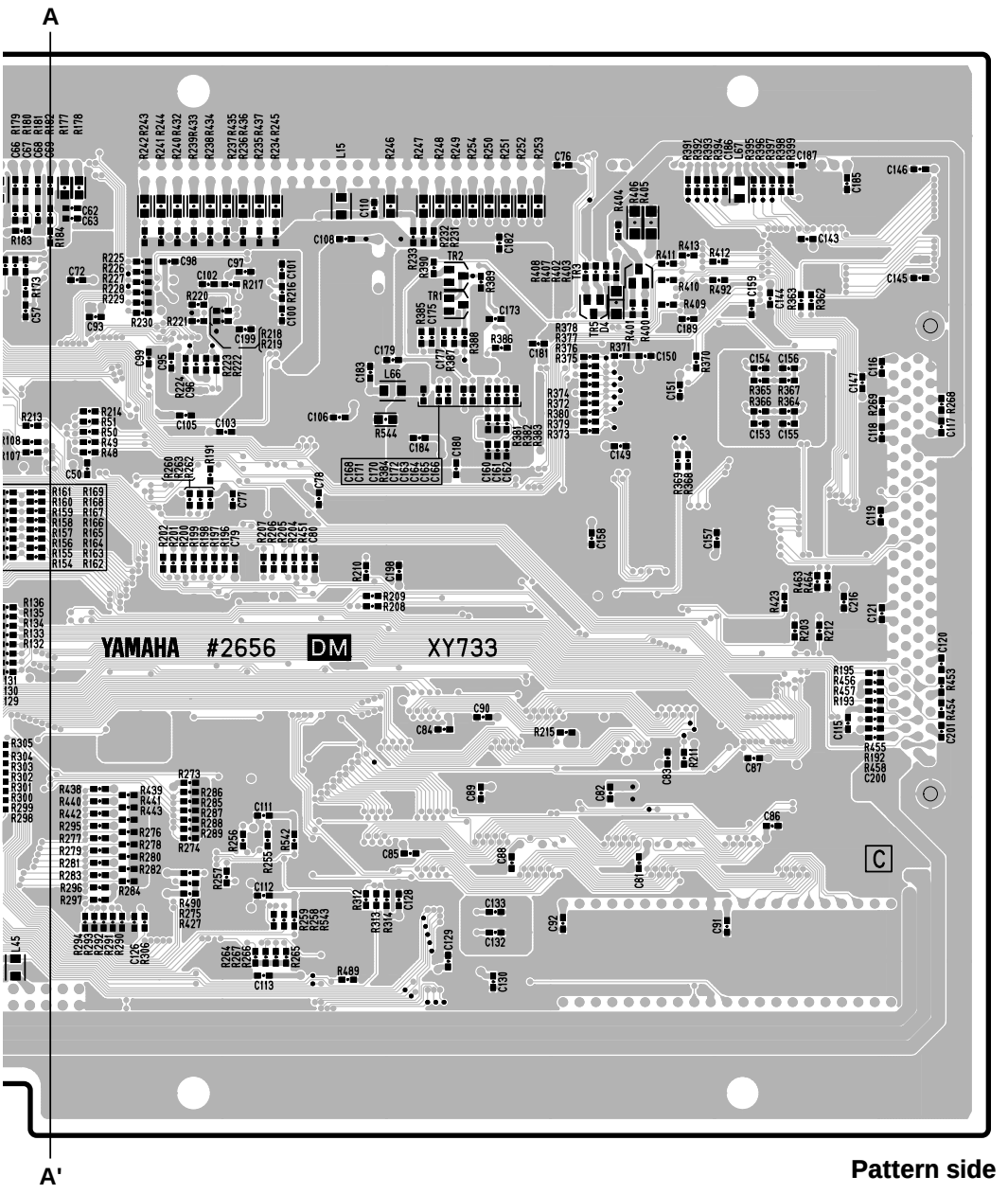

Pattern side

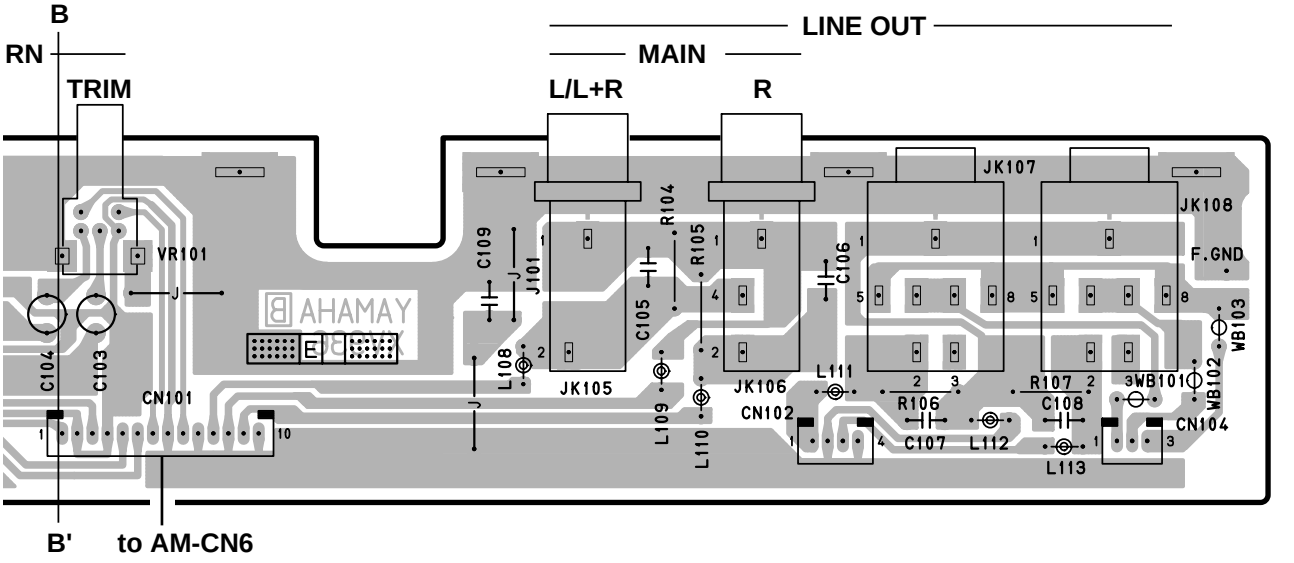

DM: 2NA-V579050-2

AJACK: 2NA-V357900-3 ⚠5

Component side

• TG Circuit Board

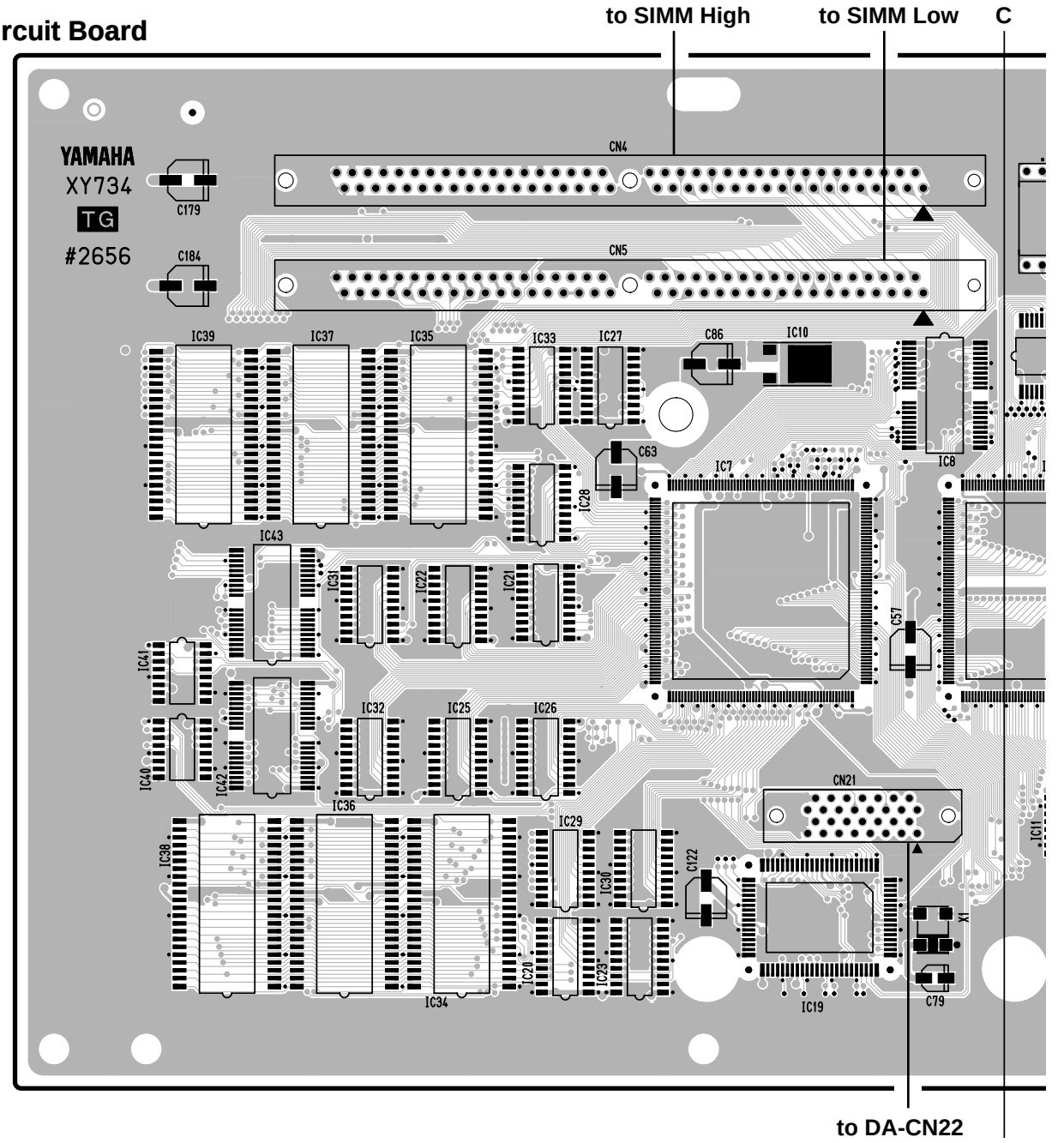

• AJACK2 Circuit Board

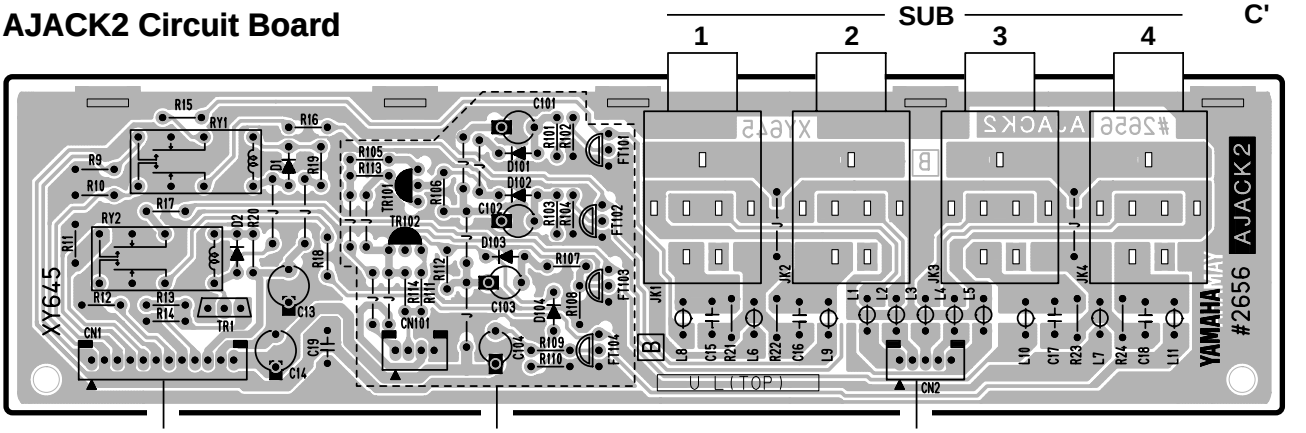

TG: 2NA-V579060-1
AJACK2: 2NA-V583010

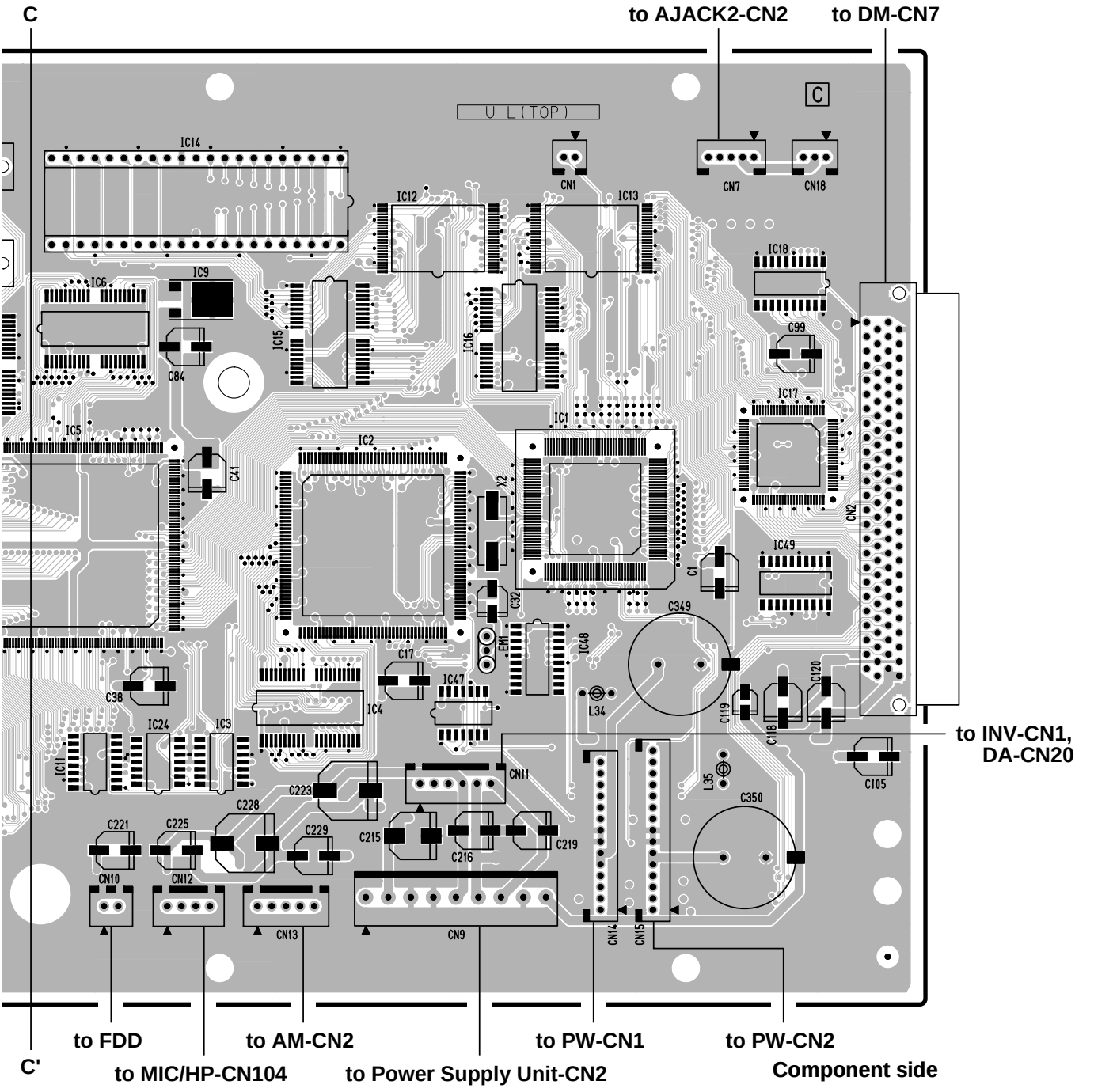

• SCSI Circuit Board

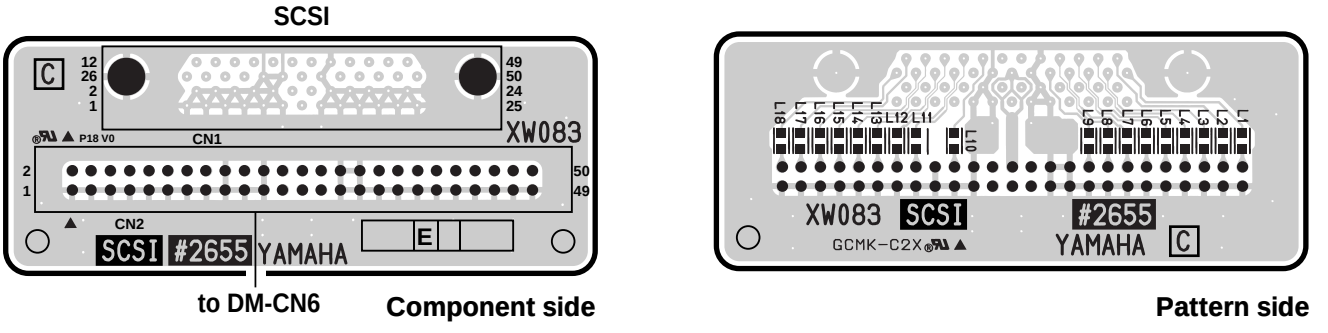

TG: 2NA-V579060-1
SCSI: V427150

• TG Circuit Board

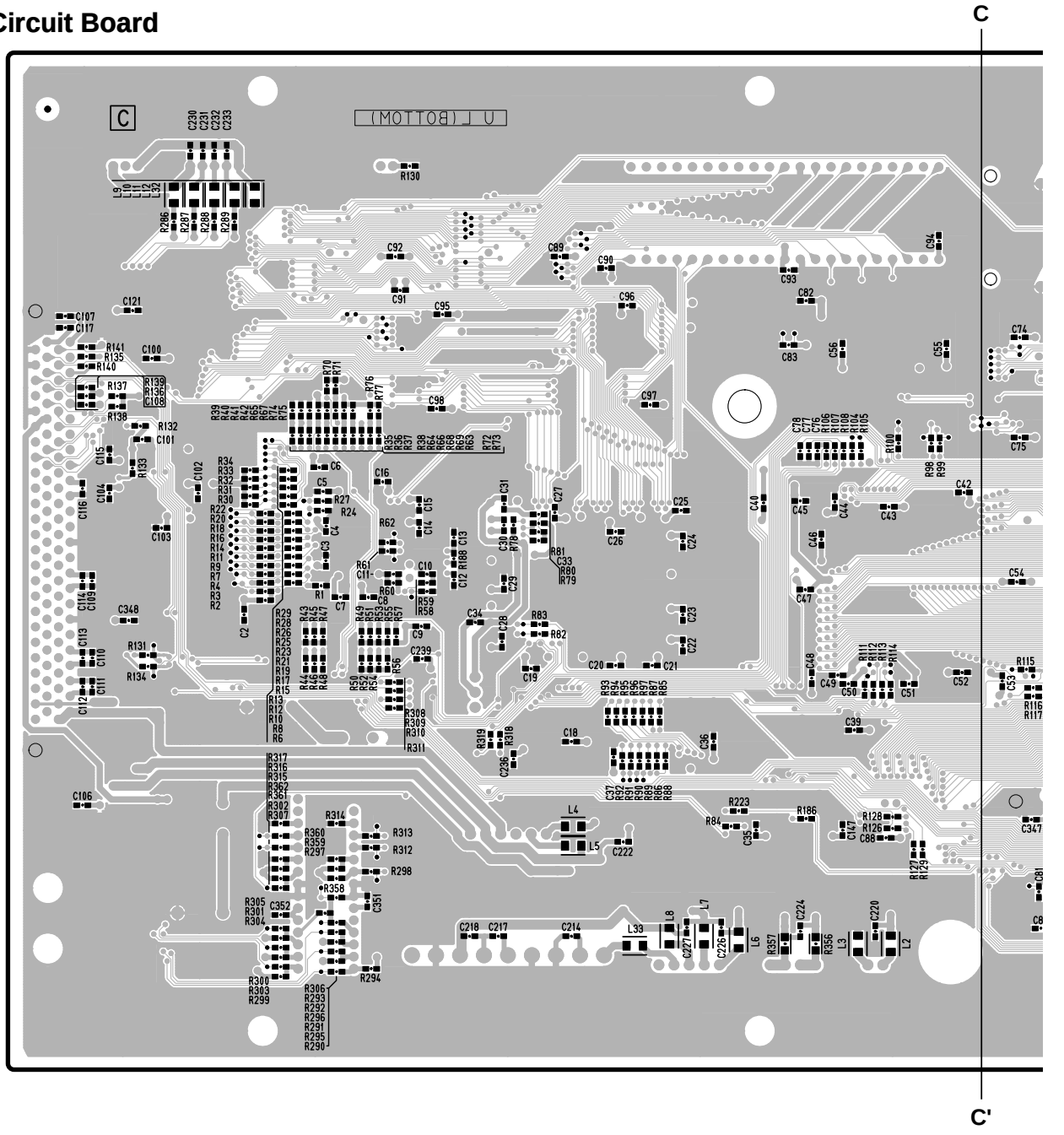

• PN2 Circuit Board

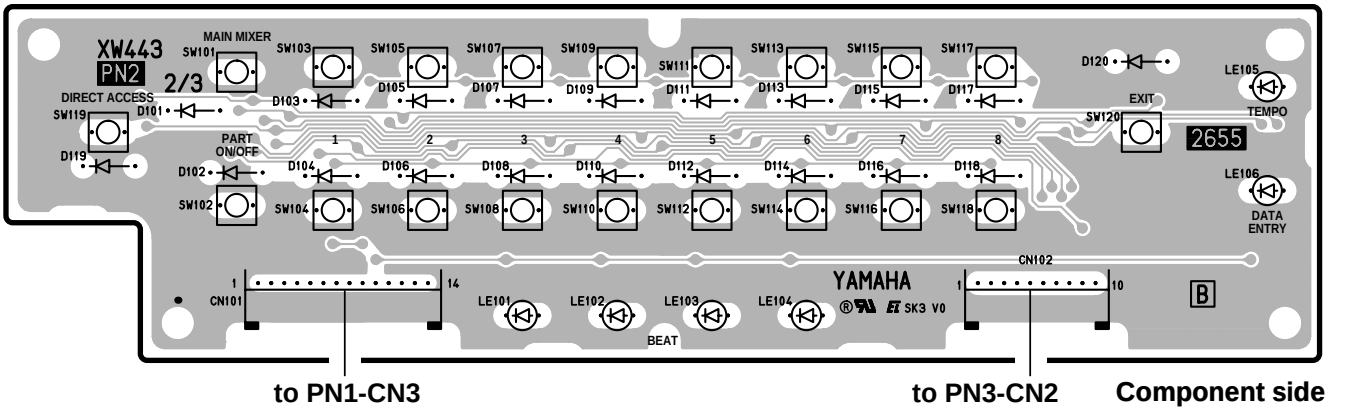

TG: 2NA-V579060-2

PN2: 2NA-V419740 ⚠3

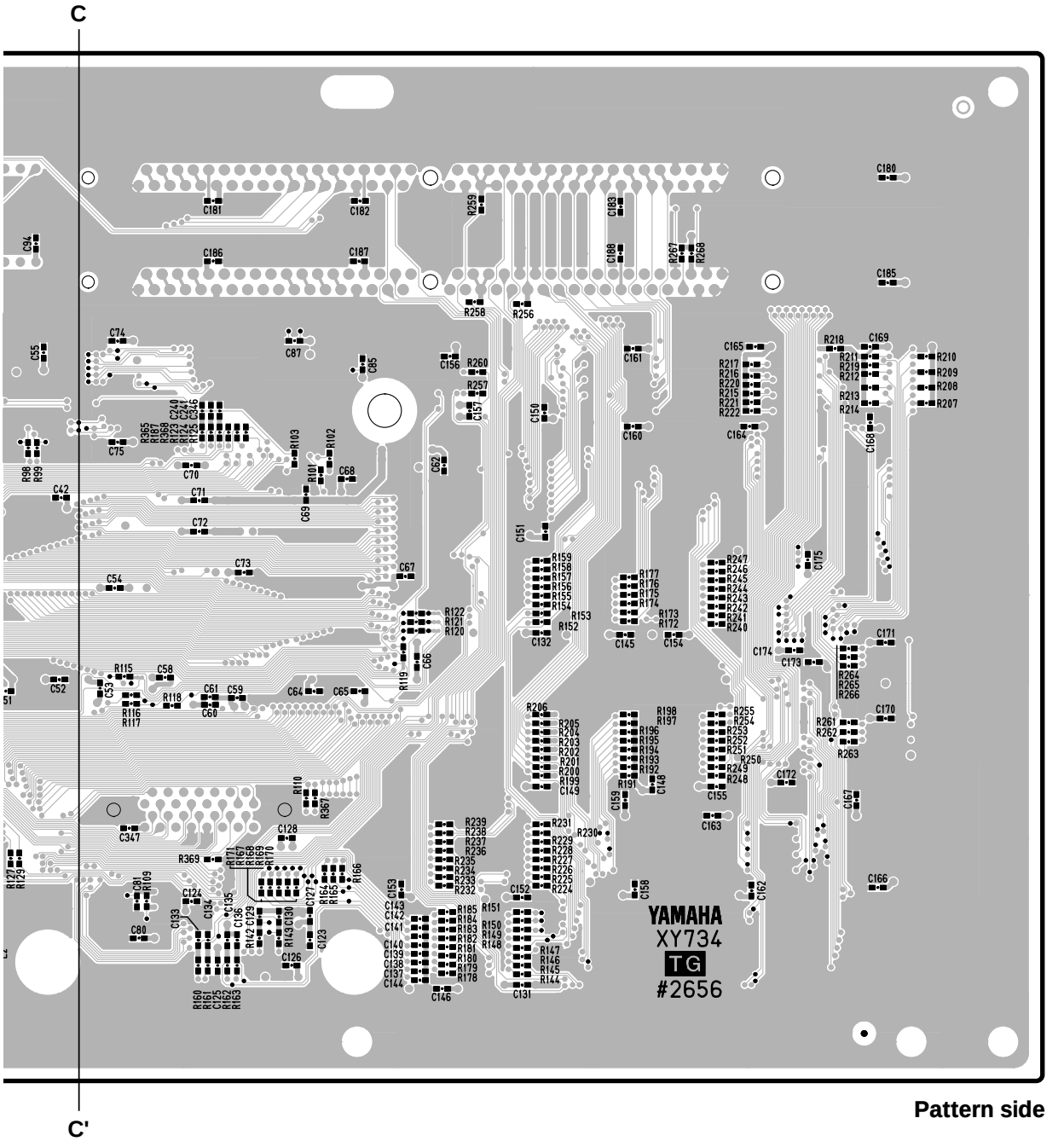

Pattern side

• PN2 Circuit Board

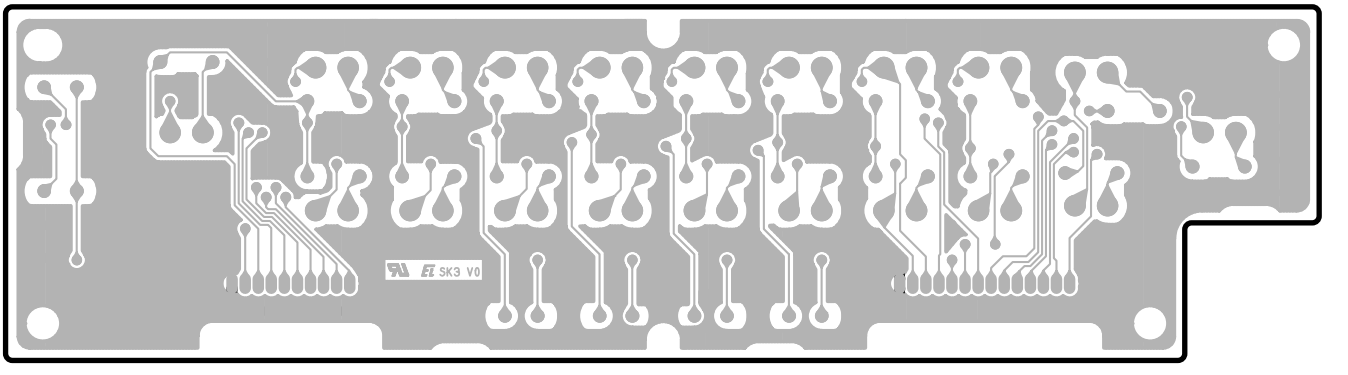

Pattern side

TG: 2NA-V579060-2

PN2: 2NA-V419740 △3

• PN4 Circuit Board

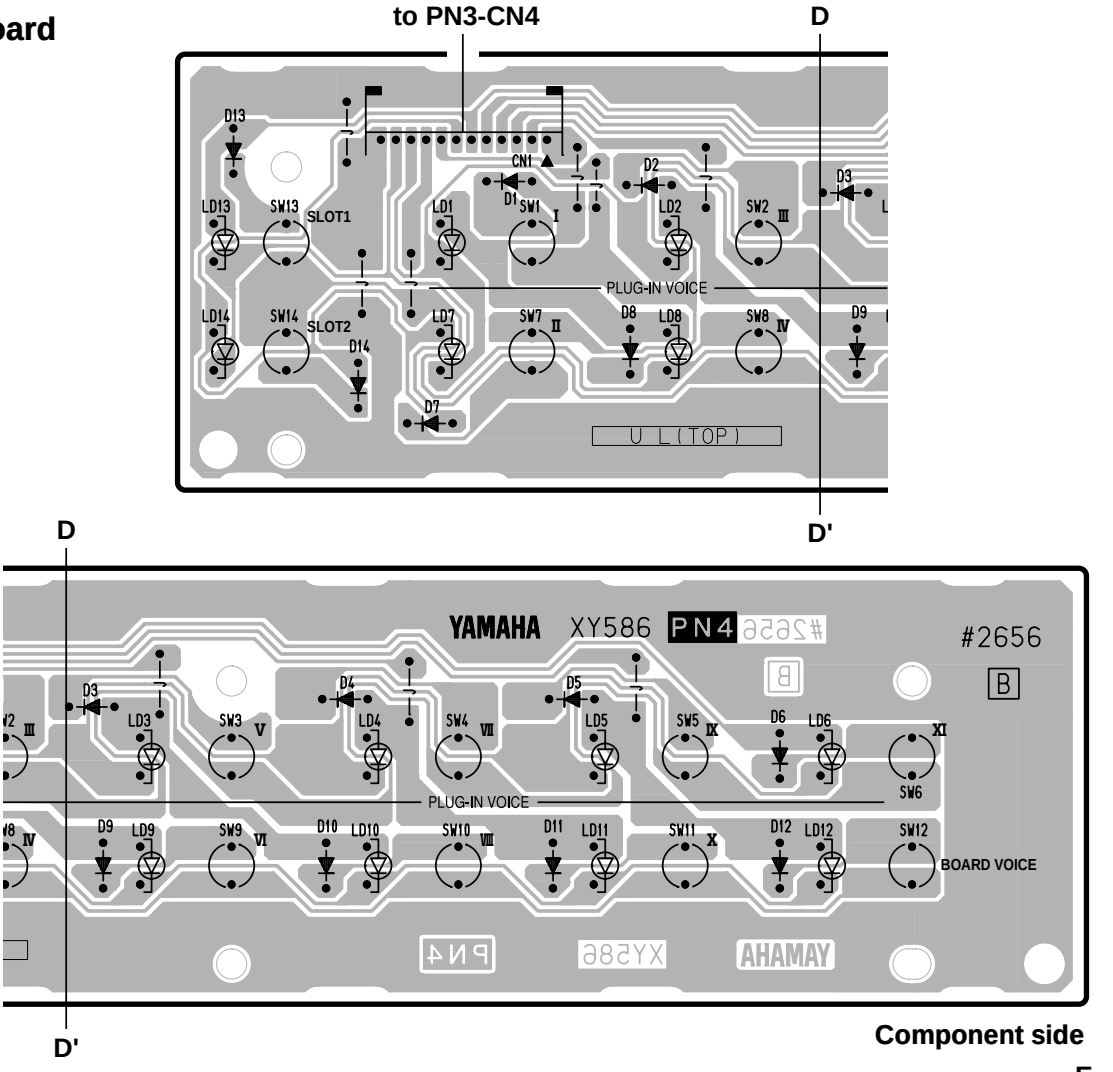

Component side

• PN1 Circuit Board

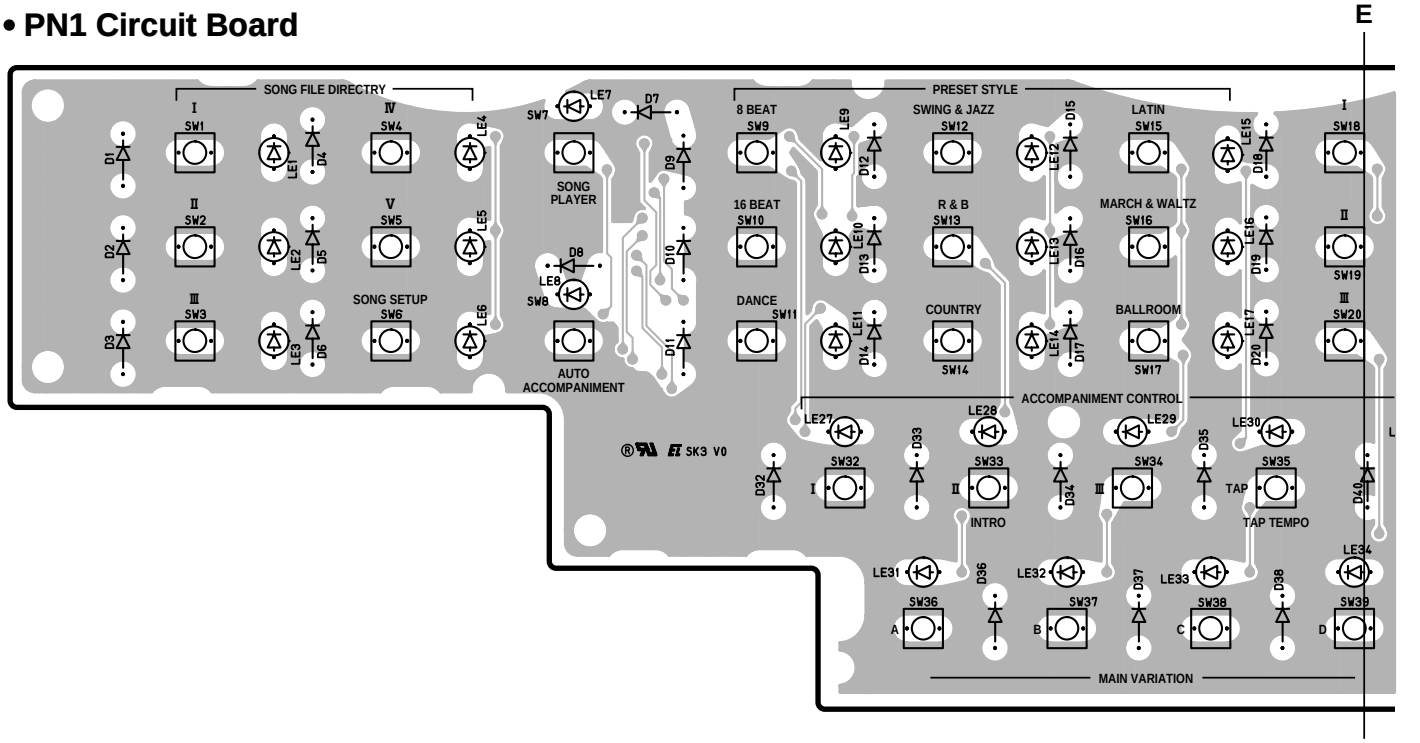

PN1: 2NA-V419740 ⚠3
PN4: 2NA-V582990 ⚠1

• MV Circuit Board

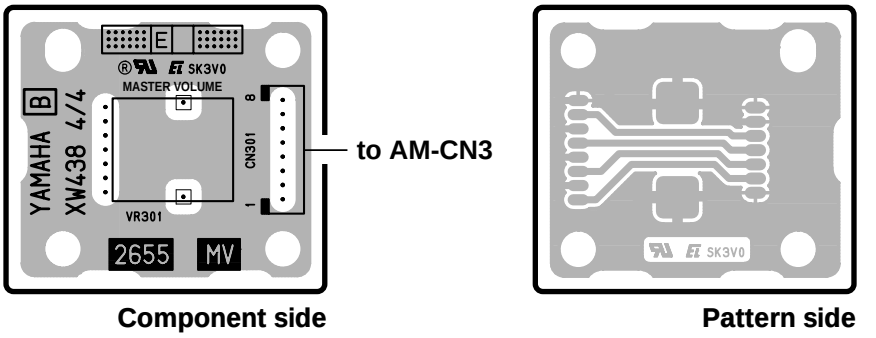

Component side

Pattern side

• LED Circuit Board

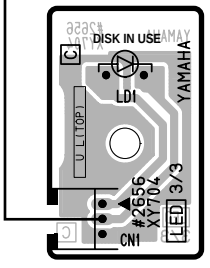

Component side

Component side

PN1: 2NA-V419740 ⚠3 , LED: 2NA-V583000 ⚠1 , MV: 2NA-V419700 ⚠2

• MIC/VR Circuit Board

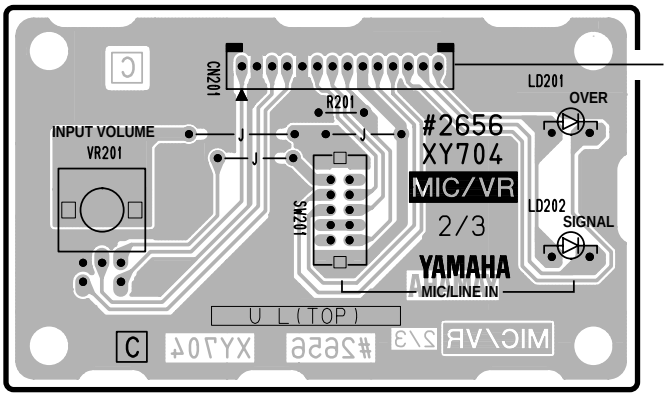

to MIC/HP-CN101

Component side

• PN1 Circuit Board

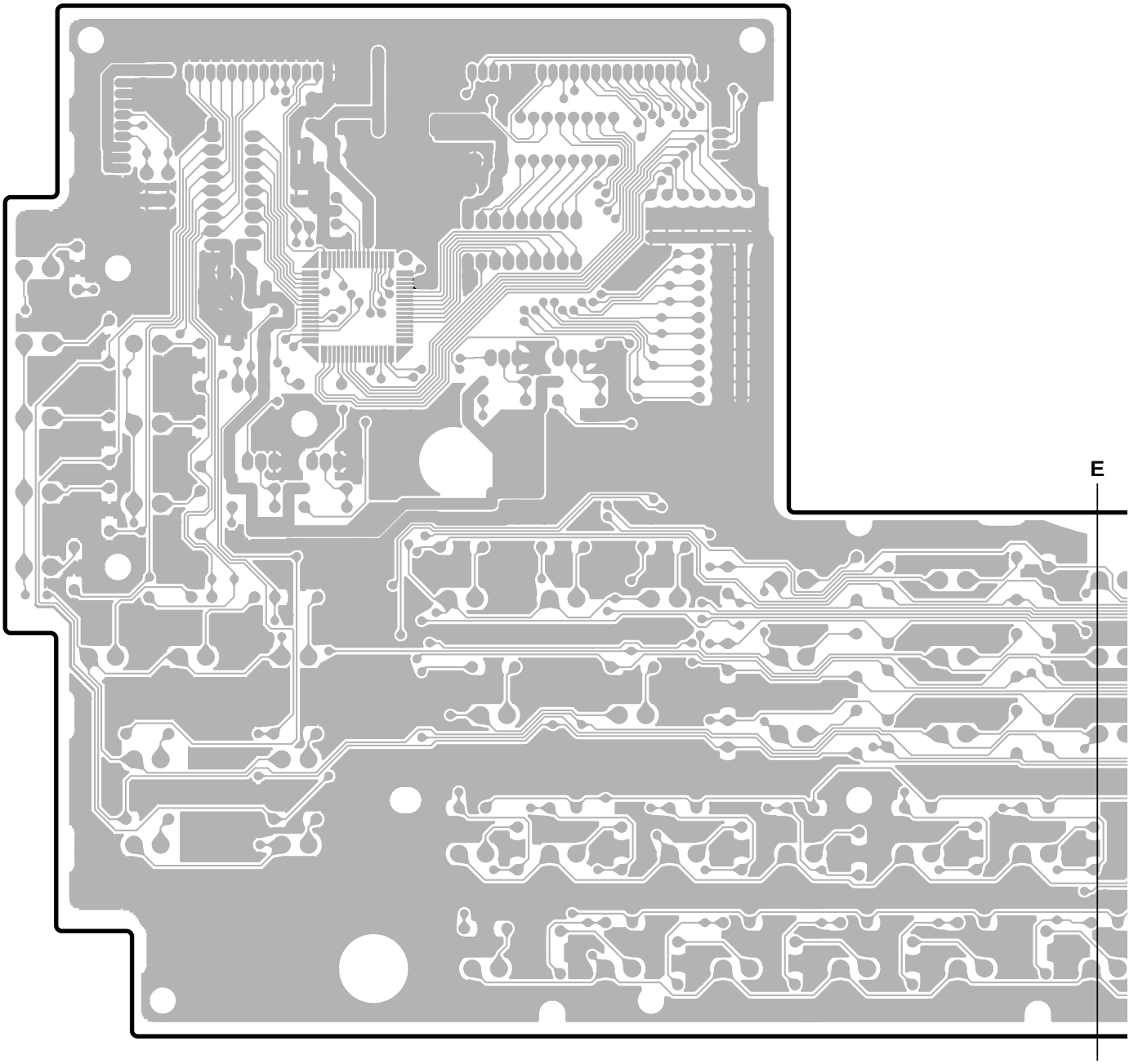

MIC/VR: 2NA-V583000 ⚠1

PN1: 2NA-V419740 ⚠3

• MIC/HP Circuit Board

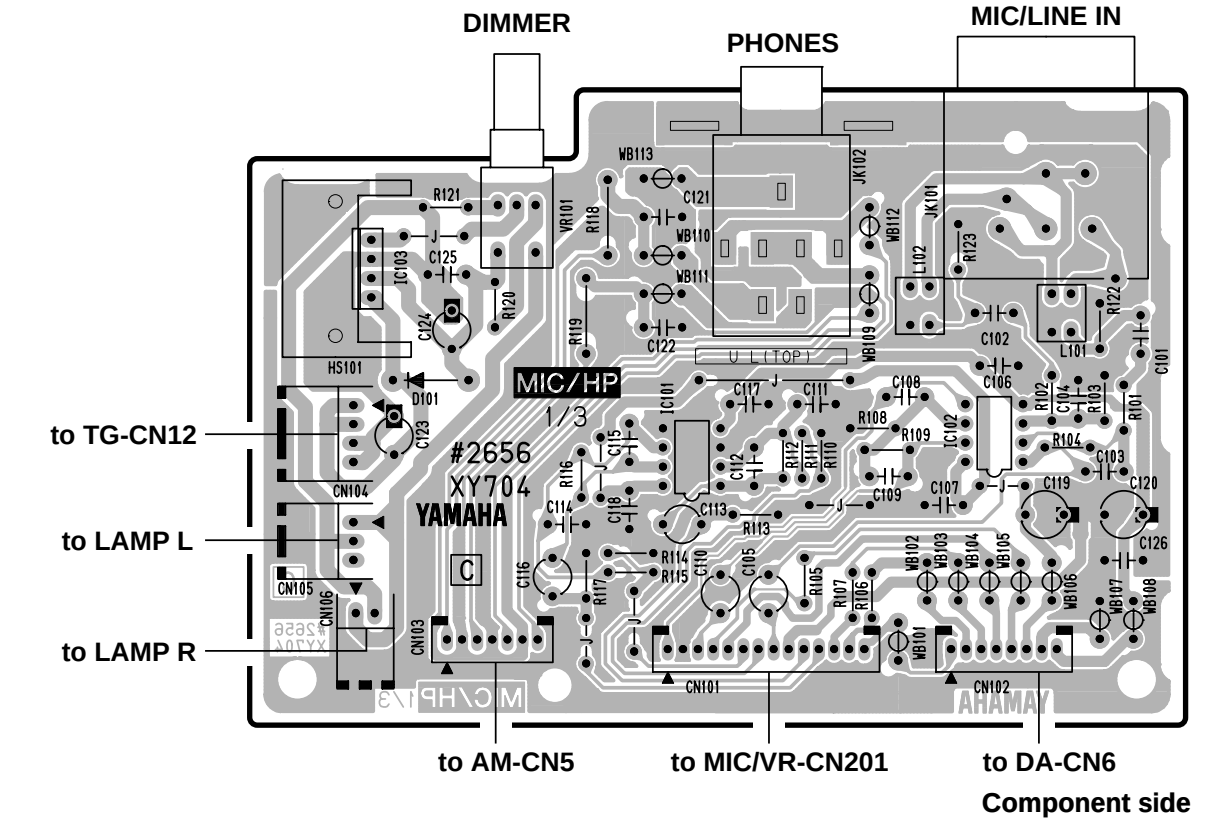

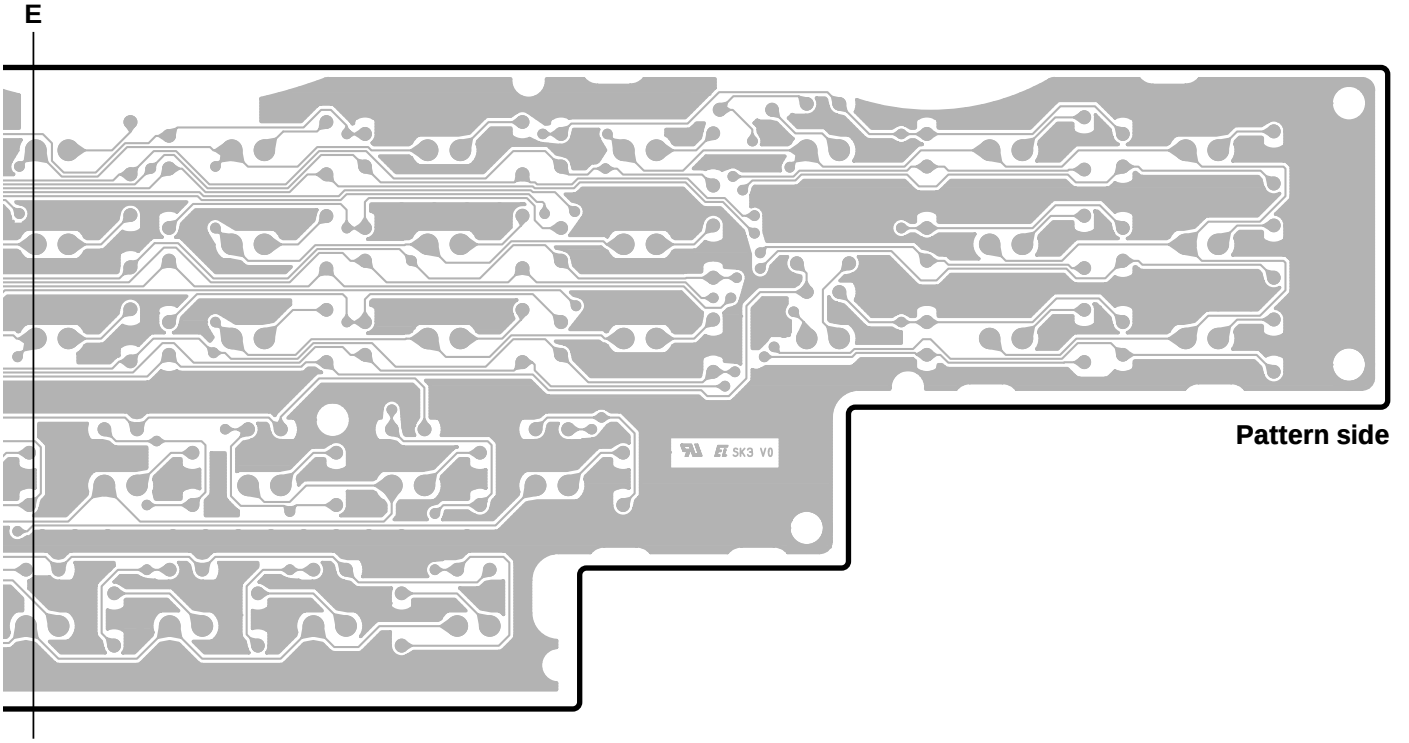

MIC/HP: 2NA-V583000 ⚠1

PN1: 2NA-V419740 ⚠3

• EN Circuit Board

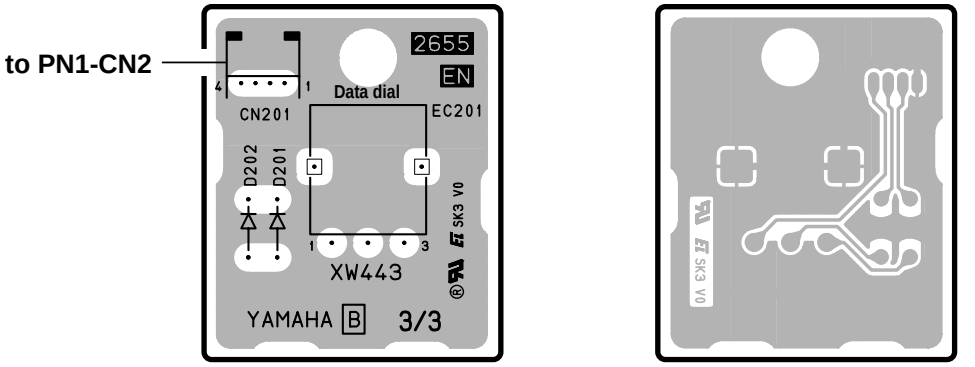

• PN3 Circuit Board

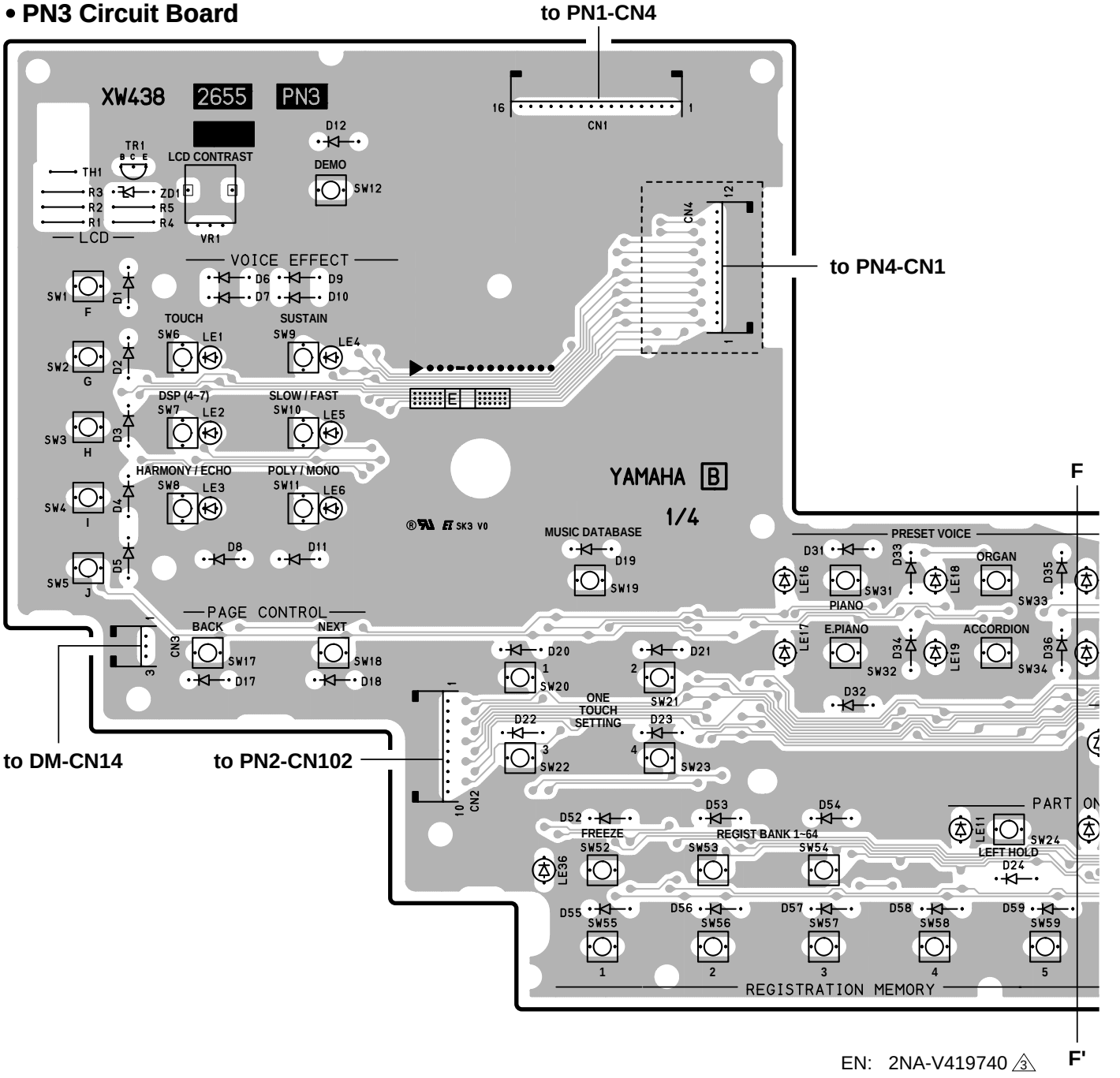

EN: 2NA-V419740 ⚠3
PN3: 2NA-V419700 ⚠2

• DA Circuit Board

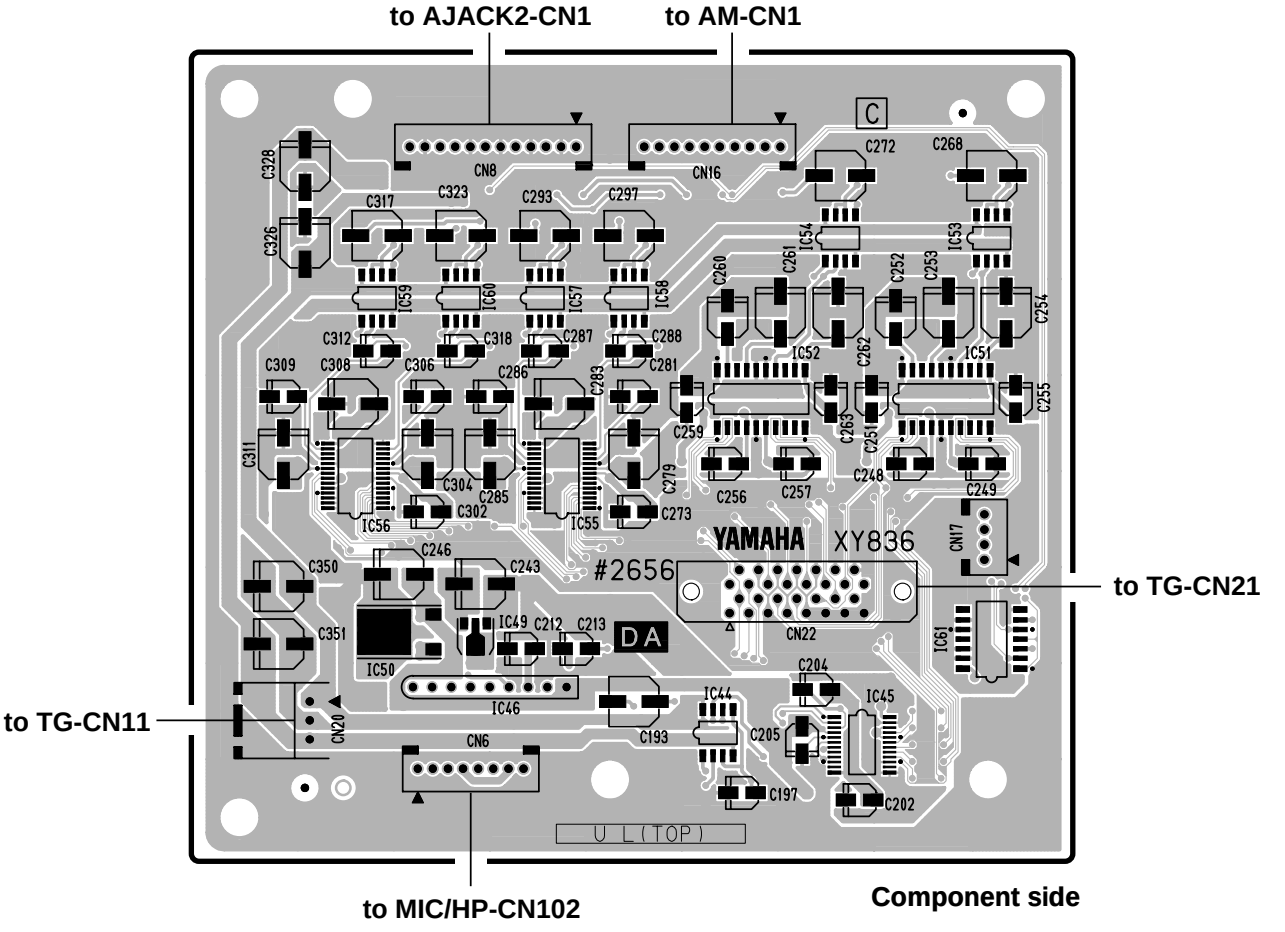

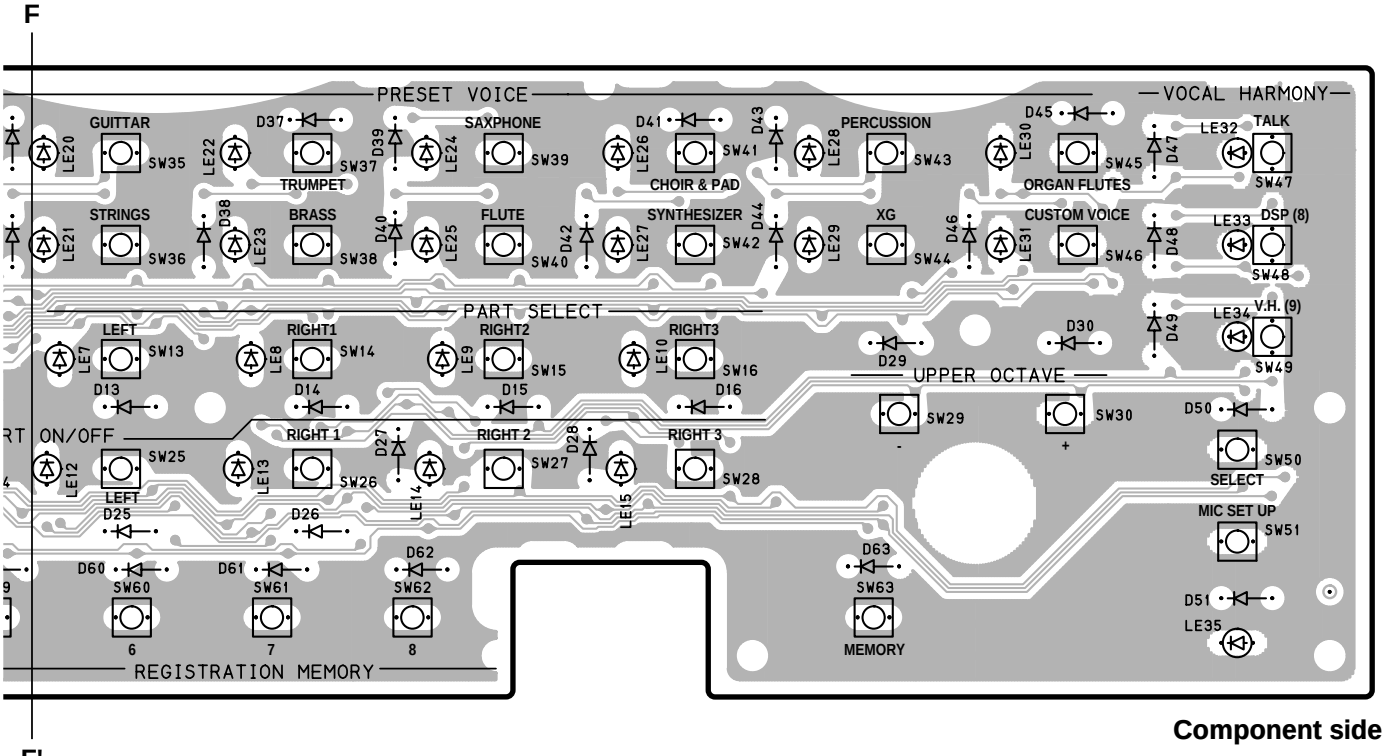

DA: 2NA-V582350-1
PN3: 2NA-V419700 △2

• DA Circuit Board

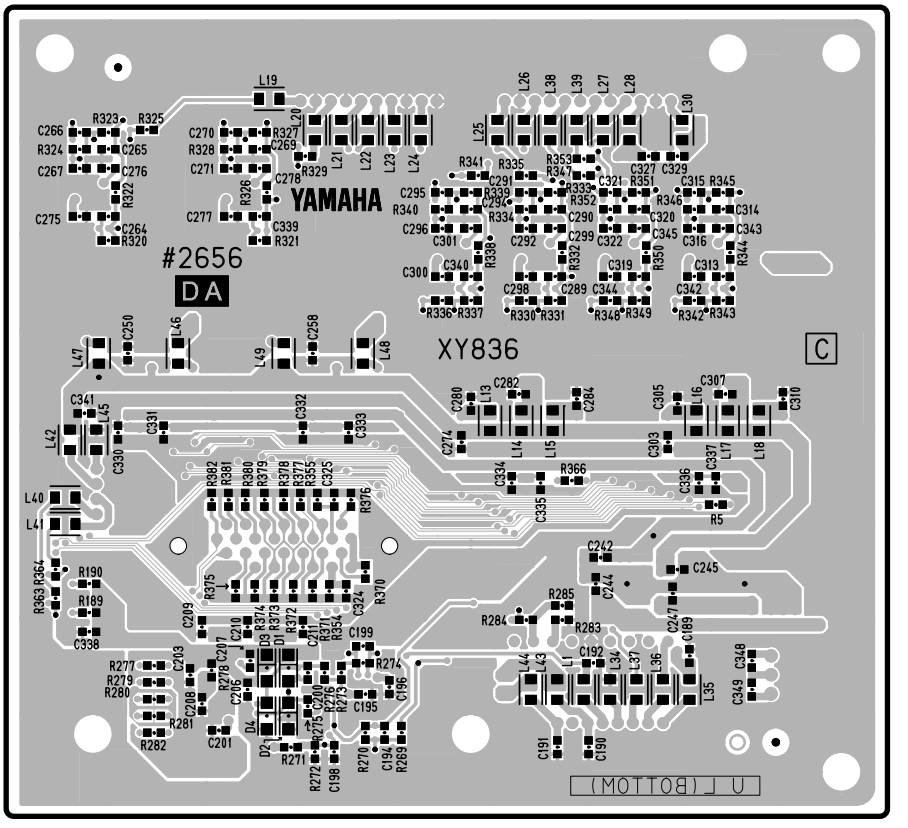

Pattern side

• PN3 Circuit Board

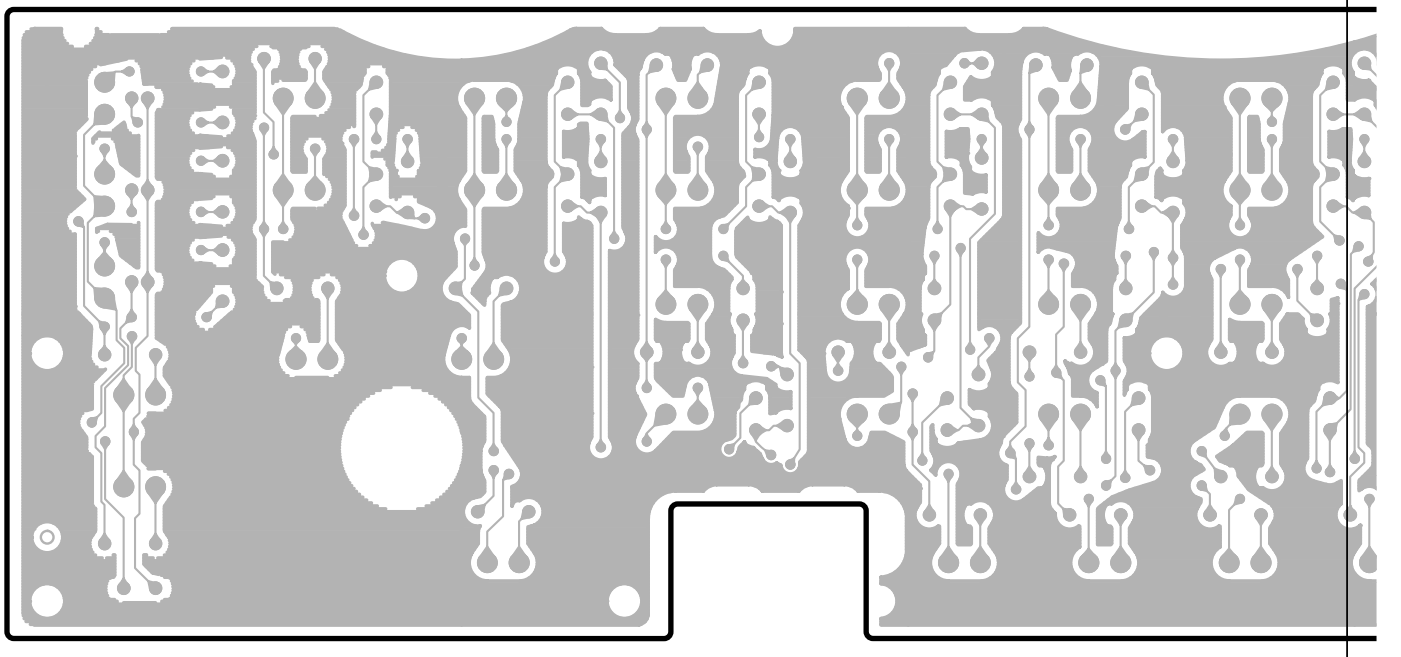

DA: 2NA-V582350-2 ⚠1

PN3: 2NA-V419700 ⚠2

• PW Circuit Board

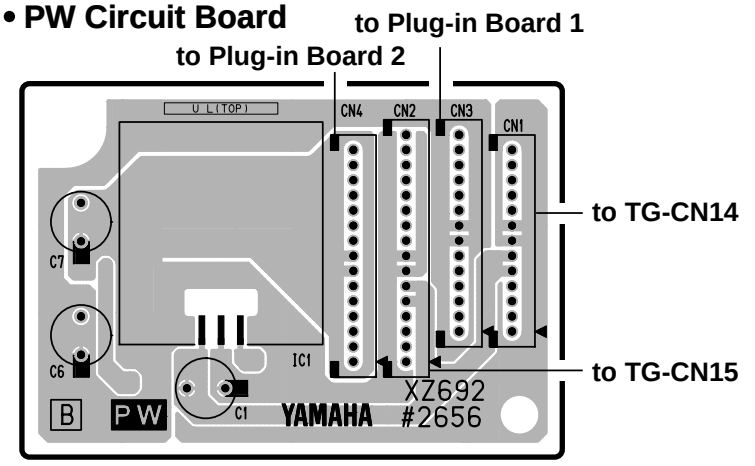

Component side

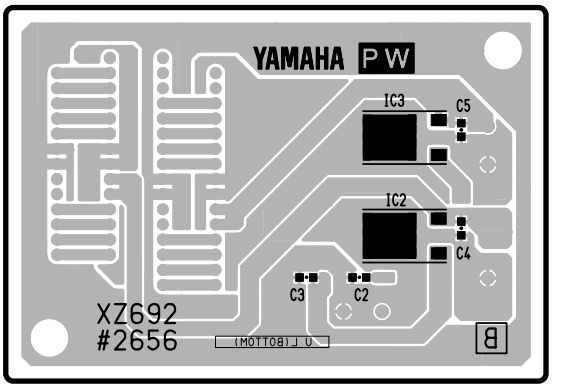

Pattern side

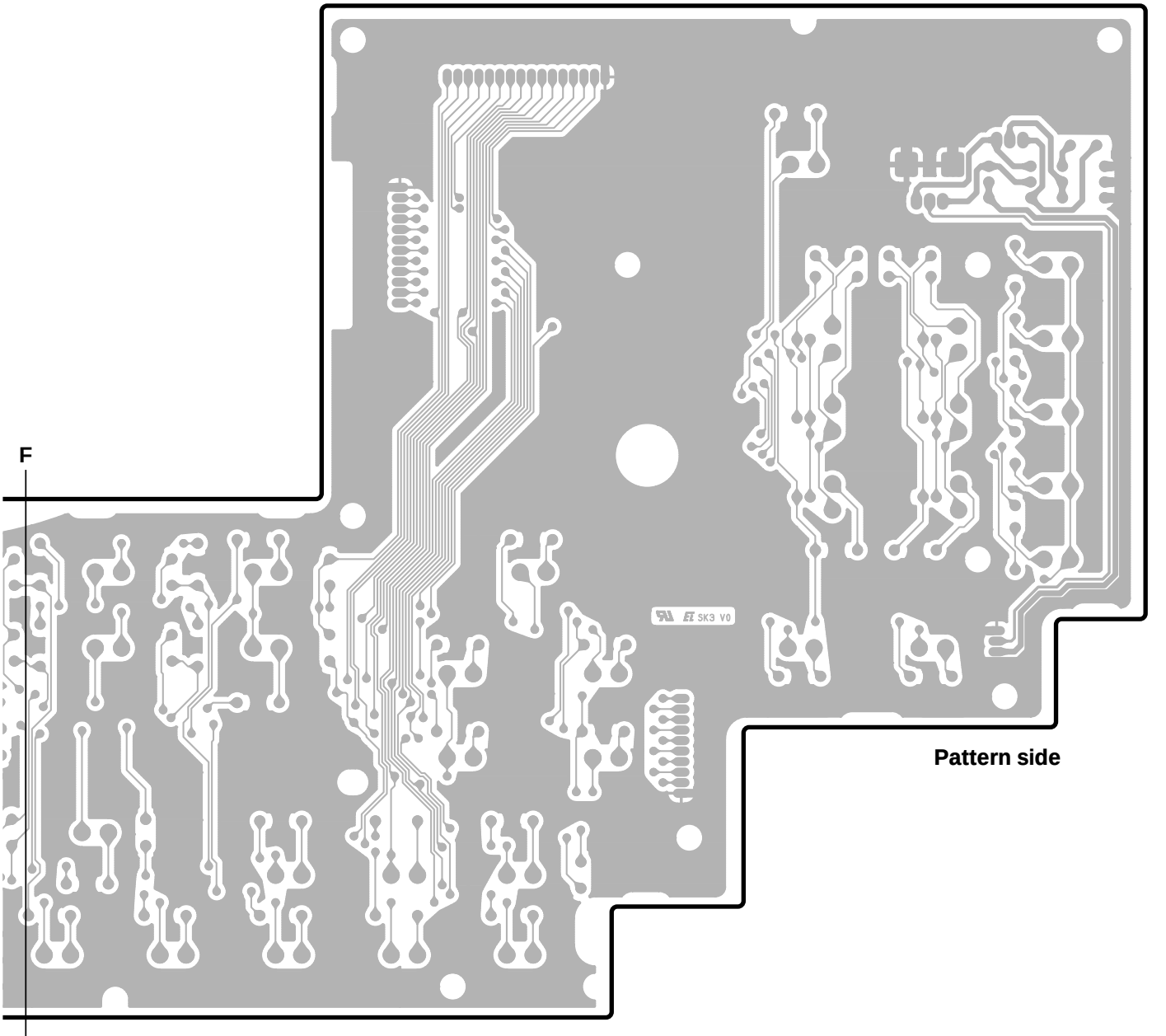

Pattern side

PW: 2NA-V688400-1, 2 ⚠1

PN3: 2NA-V419700 ⚠2

■ 9000Pro BLOCK DIAGRAM

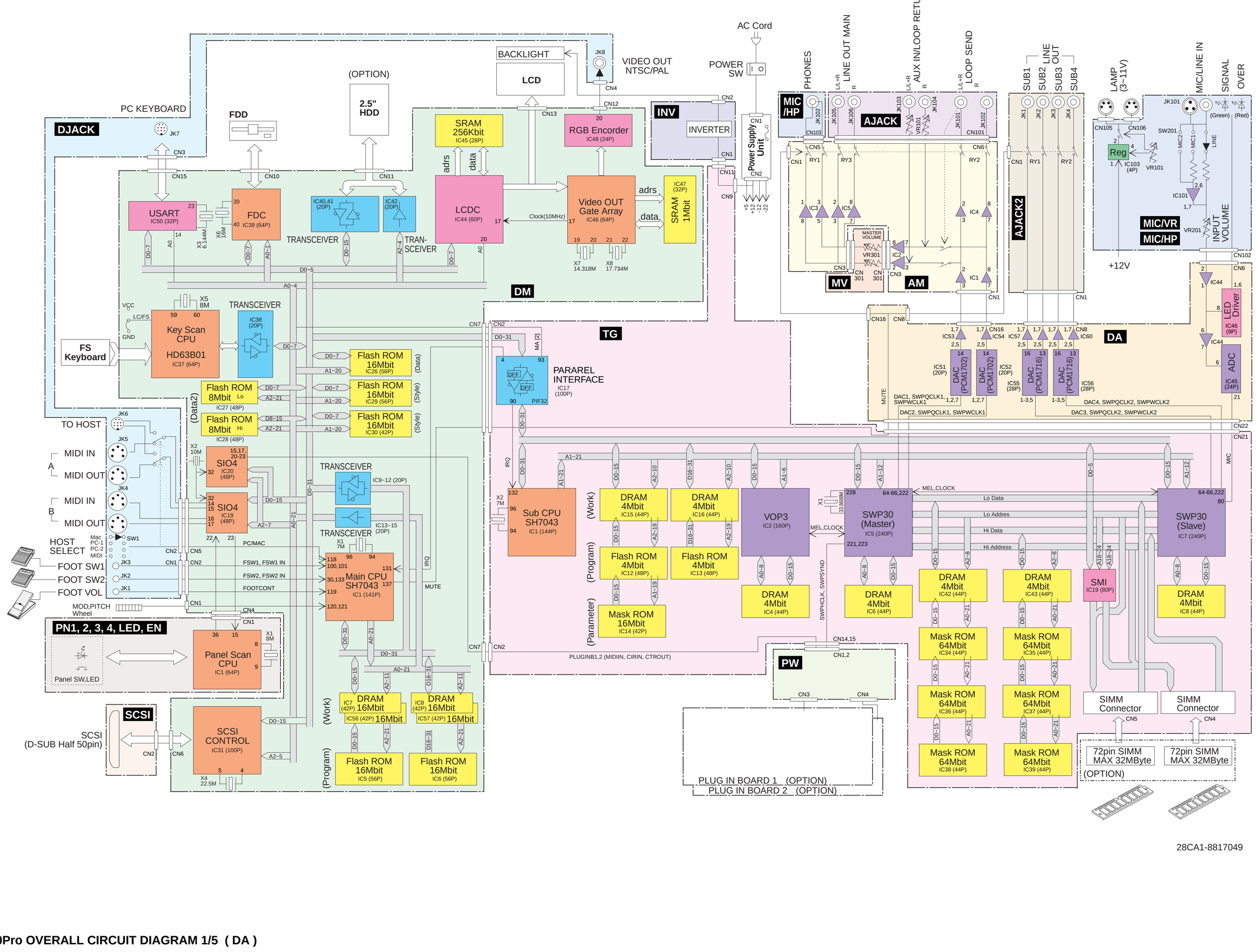

28CA1-8817049

■ 9000Pro OVERALL CIRCUIT DIAGRAM 1/5 (DA)

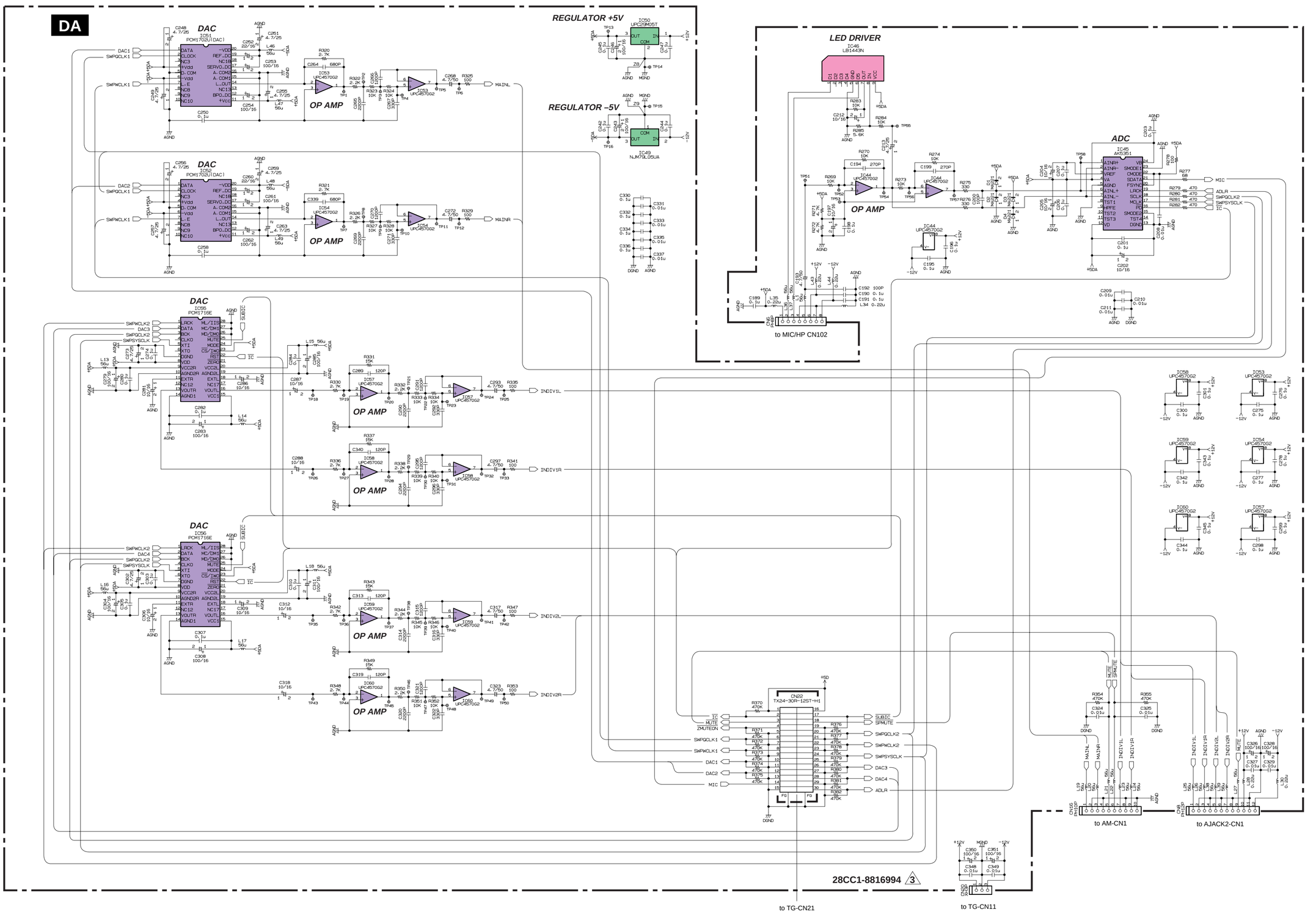

Note : See parts list for details of circuit board component parts

■900Pro OVERALL CIRCUIT DIAGRAM 4/5 (DM, MK1, MK2, PC, INV)

9000Pro

DM

UP / DOWN PITCH BEND

MAX / MIN MODULATON

to DJACK-CN1

INVERTER

OPAMP

to PN1-CN1

to DJACK-CN2

SYSTEM RESET

IC1
HD6437043AE00F
CPU(MAIN)

TRANSCEIVER

DECODER

AND

FLASH ROM 16M (DATA 1)

FLASH ROM 8M (DATA2 LOW)

FLASH ROM 8M (DATA2 HIGH)

FLASH ROM 16M (STYLE 1)

FLASH ROM 16M (STYLE 2)

FLASH ROM 16M LOW
Main Prog Low

FLASH ROM 16M HIGH
Main Prog High

DRAM 16M

D-FF

OR

DATA SELECTOR

SIO4
(GATE ARRAY)

SRAM 256K

SRAM 1M

Video Out Gate

IC2:MS
1414-XAP1
GATE ARRAY
(VIDEO OUT)

LCDC
SED1339F0B

SCSI-2 I/F
SCSI CONTROL

REGULATOR +3.3V

REGURATOR +2.85V
(SCSI-2 Active Terminator)

PKS

RGB ENCODER

FDC

USART

BUFFER

to TG - CN2

to SCSI - CN2

to TG-CN10

to DJACK-CN4

to PN3-CN3

to DJACK-CN3

	R264	R265	R266	R267
	not installed	not installed	not installed	installed

	X4	R218	R219	R220	R221
	22.5MHz	installed	installed	not installed	not installed

28CC1-8816992 ⚠2

28CC1-8811548

38CC1-8810185

PC
OP AMP
Touch Sensitivity (max.)
Touch Sensitivity (min.)
IC1: 1/2
IC1: 2/2

MK1
20P
CN1

MK2
30P
CN1

PRESSURE SENSOR

INV
to TG-CN11

BACK LIGHT

LCD unit

(▽) : Mylar Capacitor

Note : See parts list for details of circuit board component parts

FDD unit

HDD unit

9000Pro

■9000Pro OVERALL CIRCUIT DIAGRAM 5/5 (TG, PW)

TG

Power Supply Unit

Power SW

AC INLET

2A 250V

to DM-CN7

to FDD

to INV-CN1

to DA-CN20

to MIC/HP-CN104

to AM-CN2

TRANSCEIVER

PARAREL INTERFACE

BUFFER

INVERTER

VOP3

DECODER

DRAM 4M

FLASH ROM 4M (SUB PRG LOW)

FLASH ROM 4M (SUB PRG HIGH)

CPU (SUB)

MASK ROM 16M (PARAMETER)

MASK ROM 64M (WAVE1 LOW)

MASK ROM 64M (WAVE2 LOW)

MASK ROM 64M (WAVE3 LOW)

MASK ROM 64M (WAVE1 HIGH)

MASK ROM 64M (WAVE2 HIGH)

MASK ROM 64M (WAVE3 HIGH)

REGULATOR +3.3V

Master

SWP30B

Slave

SWP30B

SMI

OR

to DA-CN22

not installed

to AJACK2-CN2

to SIMM Low

to SIMM High

28CC1-8816993 4

PW

REGULATOR +5V

DC/DC CONVERTER

REGULATOR +5V

to Plug - in 1

to Plug - in 2

28CC1-8818310 1

Note : See parts list for details of circuit board component parts