7. DISASSEMBLY

Note: Even if the unit shown in the photos and illustrations in this manual may differ from your product, the procedures described here are common.

Knobs and Volumes Location

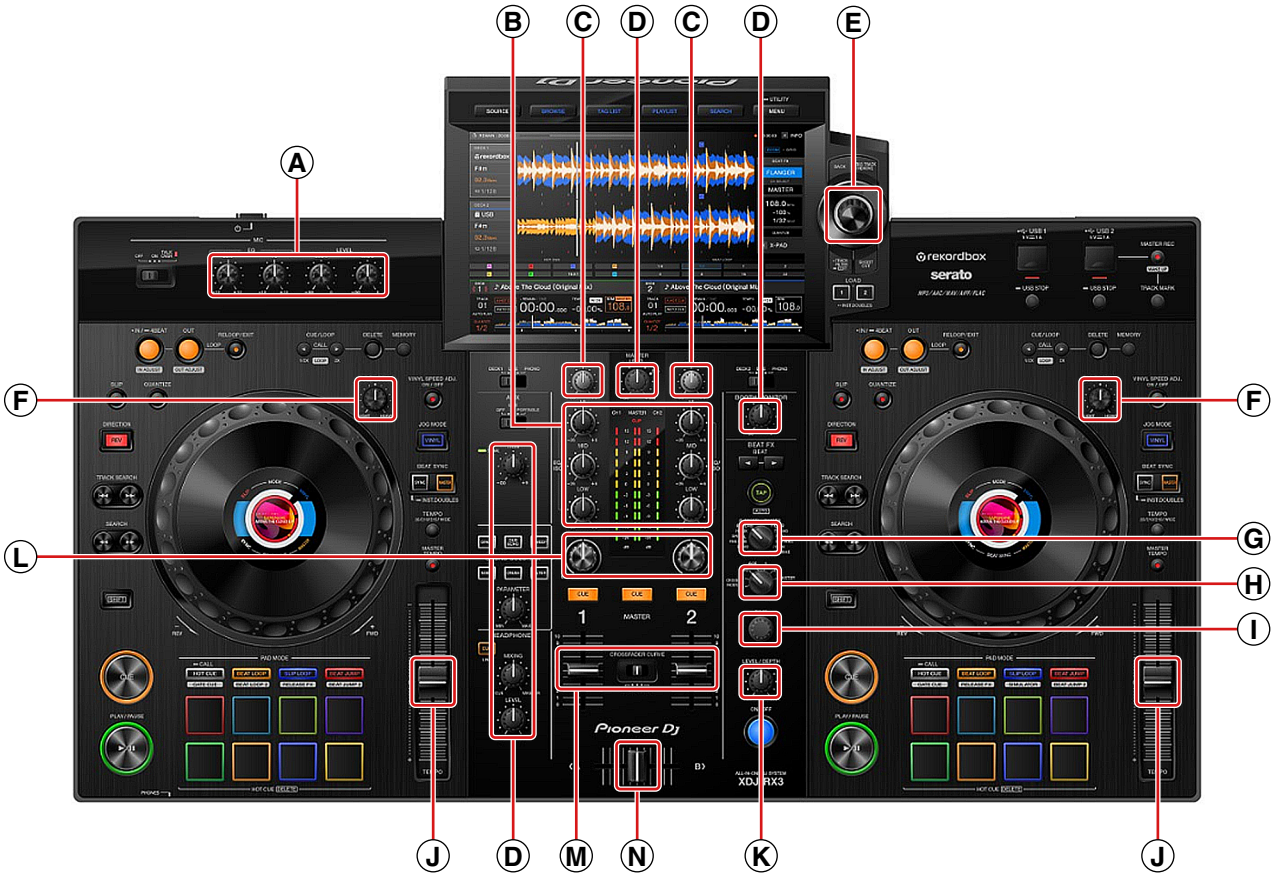

A DAA1284 ×4

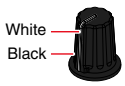

B DAA1305 ×6

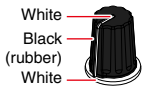

C DAA1417 ×2

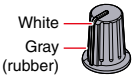

D DAA1435 ×6

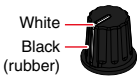

E DAA1246

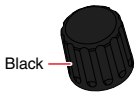

F DAA1326 ×2

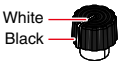

G DAA1213

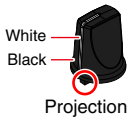

H DAA1205

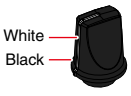

I DAA1180

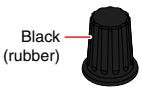

M DAC2685 ×2 + DAC3539 ×2 + DNK5888 ×2

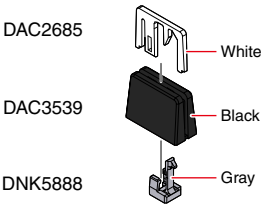

N DAC2685 + DAC3238 + DNK6440

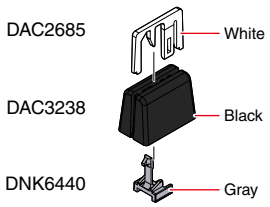

J DNK5981 ×2

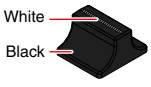

K DAA1434

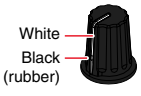

L DAA1462 ×2

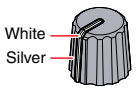

9. EXPLODED VIEWS AND PARTS LIST

NOTES:
- *Parts marked by "NSP" are generally unavailable because they are not in our Master Spare Parts List.*
- *The ⚠ mark found on some component parts indicates the importance of the safety factor of the part. Therefore, when replacing, be sure to use parts of identical designation.*
- *Screws adjacent to ▼ mark on product are used for disassembly.*
- *For the applying amount of lubricants or glue, follow the instructions in this manual. (In the case of no amount instructions, apply as you think it appropriate.)*

9.1 PACKING SECTION

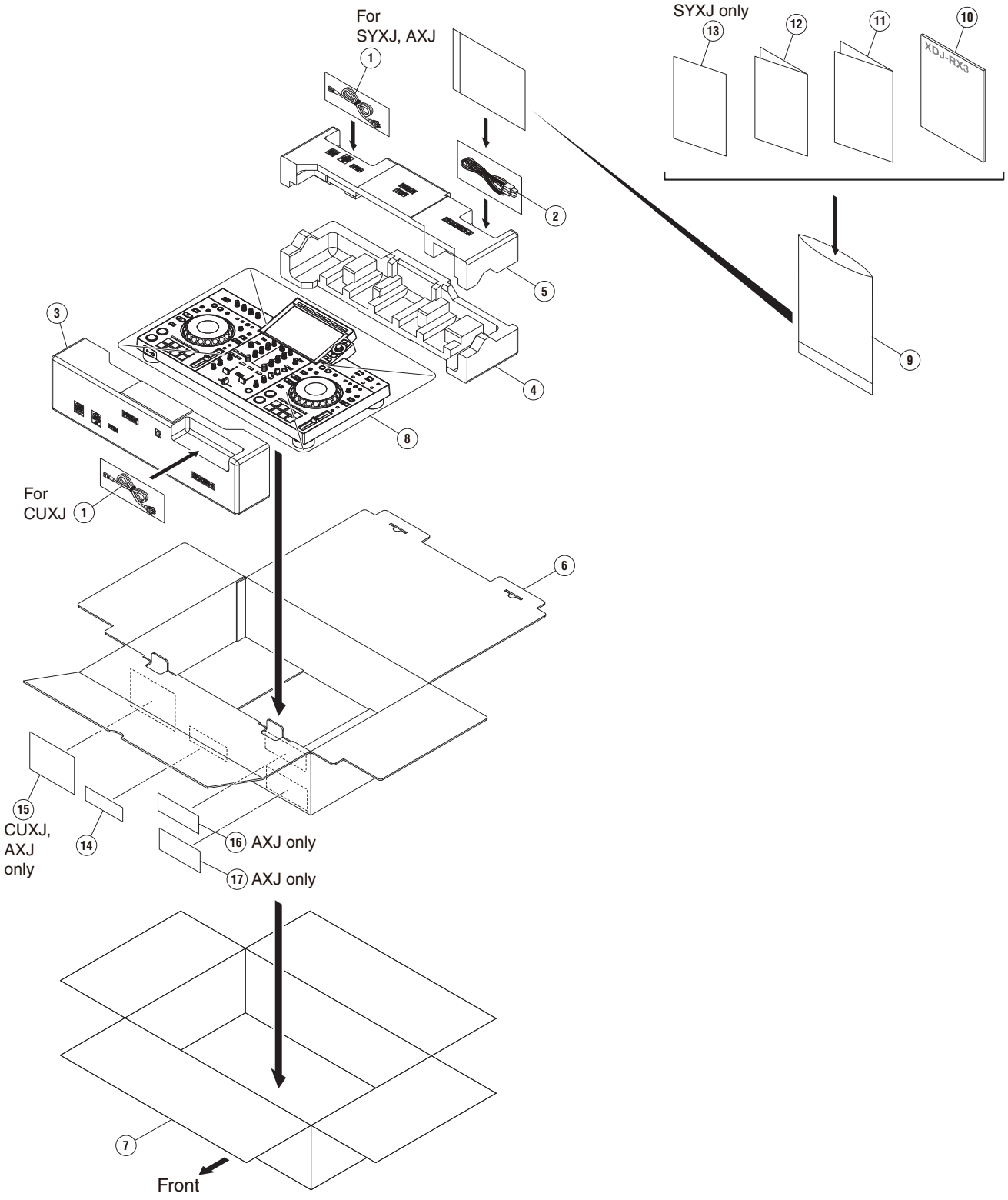

(1) PACKING SECTION PARTS LIST

Mark	No.	Description	Part No.
⚠	1	Power Cord	See Contrast table (2)
	2	USB cable	DDE1140
	3	Packing Pad	DHA2011
	4	Packing Pad	DHA2012
	5	Packing Pad	DHA2013
	6	Packing Case	DHG3812
	7	Master Carton	See Contrast table (2)
	8	Mirror Mat (1200*1000)	DHL1169
NSP	9	Polyethylene Bag (0.06*230*340)	AHG7117
	10	Quick Start Guide	See Contrast table (2)
	11	Precautions for Use	See Contrast table (2)
	12	Software license notice	DRH1646
NSP	13	Warranty	See Contrast table (2)
NSP	14	Label	DRW3026
NSP	15	Label	See Contrast table (2)
NSP	16	Label	See Contrast table (2)
NSP	17	Label	See Contrast table (2)

(2) CONTRAST TABLE

XDJ-RX3/SYXJ, CUXJ and AXJ are constructed the same except for the following:

Mark	No.	Symbol and Description	XDJ-RX3/SYXJ	XDJ-RX3/CUXJ	XDJ-RX3/AXJ
⚠	1	Power Cord	ADG1244	DDG1108	DDG1114
	7	Master Carton	DHG3813	DHG3814	DHG3816
	10	Quick Start Guide	DRH1627	DRH1627	DRH1628
	11	Precautions for Use	DRH1629	DRH1629	DRH1630
NSP	13	Warranty	DRY1274	Not used	Not used
NSP	15	Label	Not used	DRW2997	DRW2999
NSP	16	Label	Not used	Not used	DRW2953
NSP	17	Label	Not used	Not used	DRW3012

9.2 BOTTOM SECTION

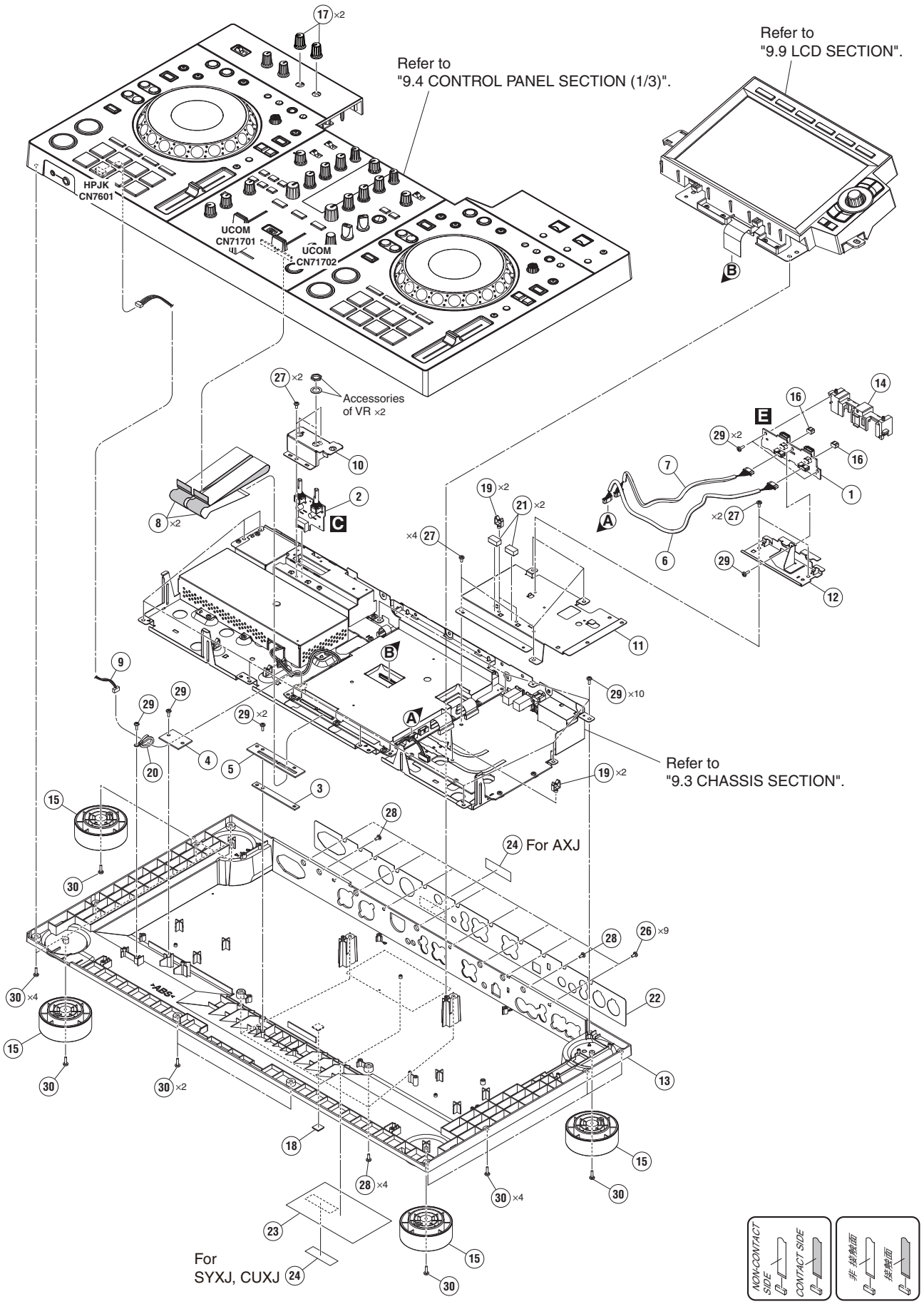

(1) BOTTOM SECTION PARTS LIST

Mark	No.	Description	Part No.
	1	USBA Assy	DWX4535
	2	MTRM Assy	DWX4548
	3	DKHD Assy	DWX4560
	4	HPHD Assy	DWX4561
	5	MUHD Assy	DWX4684
	6	Shielded Conn-Cable	DDA1103
	7	Shielded Conn-Cable	DDA1104
	8	FFC	DDD2015
	9	Parallel Jumper	PF06PP-B42
	10	Stay	DNH3299
	11	Shield Case	DNH3303
	12	Stay	DNH3311
	13	Chassis	DNK6704
	14	Base	DNK6708
	15	Insulator	DXB2215
	16	Gasket/Jog	DEC3562
	17	Knob/LBK	DAA1284
	18	Rubber Foot	VEB1349
	19	Holder	VEC1355
	20	Cord Clamper	DEX1025
	21	Cushion	DEC4022
	22	Rear Panel	See Contrast table (2)
NSP	23	Label	See Contrast table (2)
NSP	24	Serial Label (UPC)	DRW2311
	25	•••••	
	26	Screw	BBZ30P060FTB
	27	Screw	BBZ30P060FTC
	28	Screw	BBZ30P080FTB
	29	Screw	BPZ30P080FNI
	30	Screw	BPZ30P100FTB

(2) CONTRAST TABLE

XDJ-RX3/SYXJ, CUXJ and AXJ are constructed the same except for the following:

Mark	No.	Symbol and Description	XDJ-RX3/SYXJ	XDJ-RX3/CUXJ	XDJ-RX3/AXJ
	22	Rear Panel	DAH3358	DAH3358	DAH3361
NSP	23	Label	DRW2996	DRW2996	Not used

9.3 CHASSIS SECTION

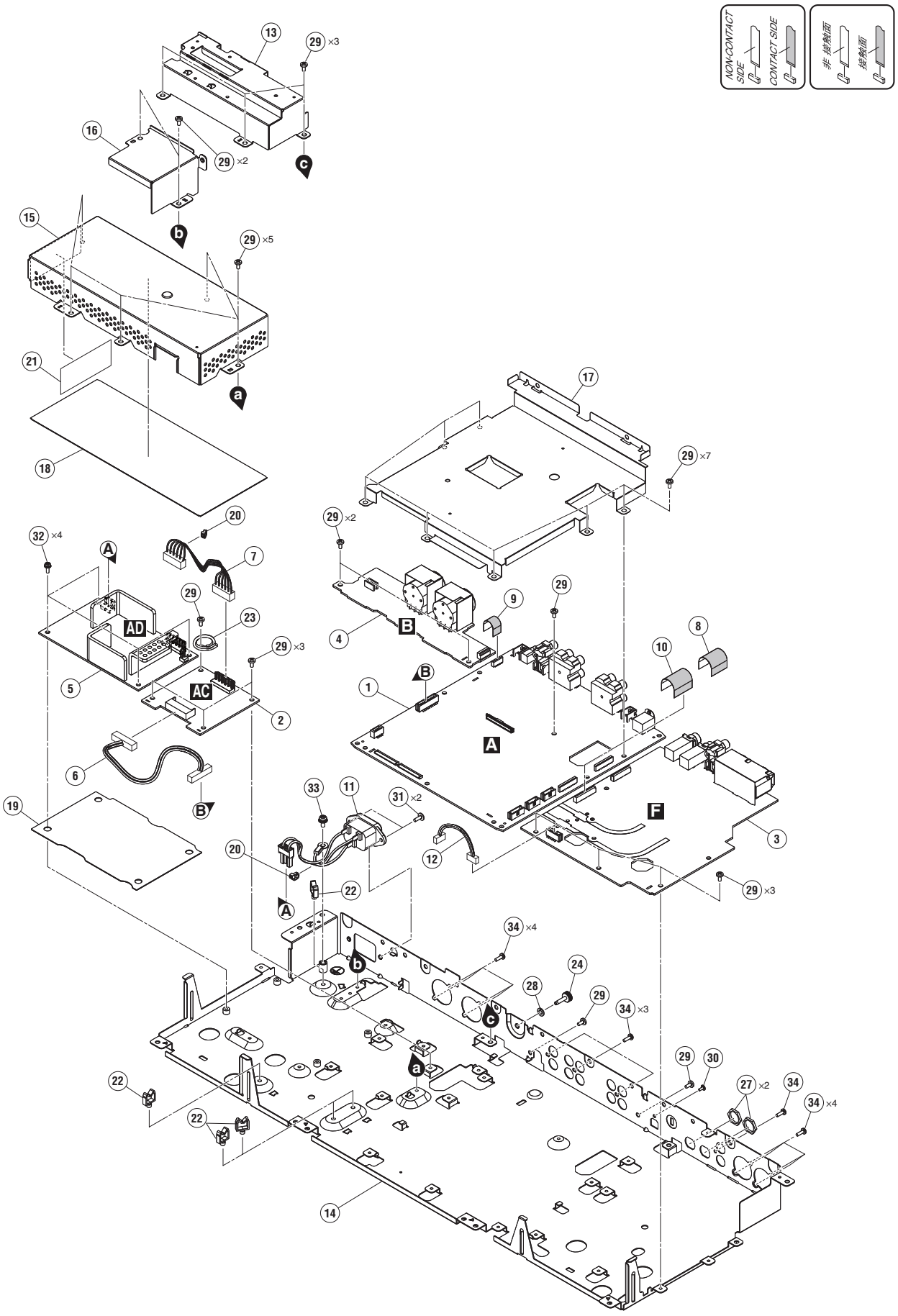

CHASSIS SECTION PARTS LIST

Mark	No.	Description	Part No.
	1	MAIN Assy	DWX4531 or DWX4707
	2	SUBP Assy	DWX4540
	3	AOUT Assy	DWX4543
	4	MCJK Assy	DWX4544
⚠	5	SW POWER SUPPLY	DWR1590
	6	Crimp Connector	DDC1038
	7	Crimp Connector	DDC1039
	8	FFC/19P	DDD1689
	9	FFC	DDD1888
	10	FFC	DDD2012
⚠	11	AC Inlet	DKP3996
	12	Parallel Jumper	PF06PP-B07A
	13	Shield Case	DNH3305
	14	Stay	DNH3468
	15	Shield Case	DNH3471
	16	Shield Case	DNH3472
	17	Shield Case	DNH3473
	18	Sheet	DEC3981
	19	Sheet	DEC3982
	20	Cable Tie (SKB-90BK)	ZCA-SKB90BK
	21	Sheet	DEC4035
	22	Holder	VEC1355
	23	Cord Clamper	DEX1025
	24	Earth Terminal	DKE1015
	25	•••••	
	26	•••••	
	27	Nut (M12)	NKX2FNI
	28	Spring Lock Washer	WS40FNI
	29	Screw	BBZ30P060FTC
	30	Screw (M3*5)	DBA1340
	31	Screw	IBZ30P080FTB
	32	Screw	PMH30P080FTC
	33	Screw	PMH40P080FTC
	34	Screw	PPZ30P080FTB

9.4 CONTROL PANEL SECTION (1/3)

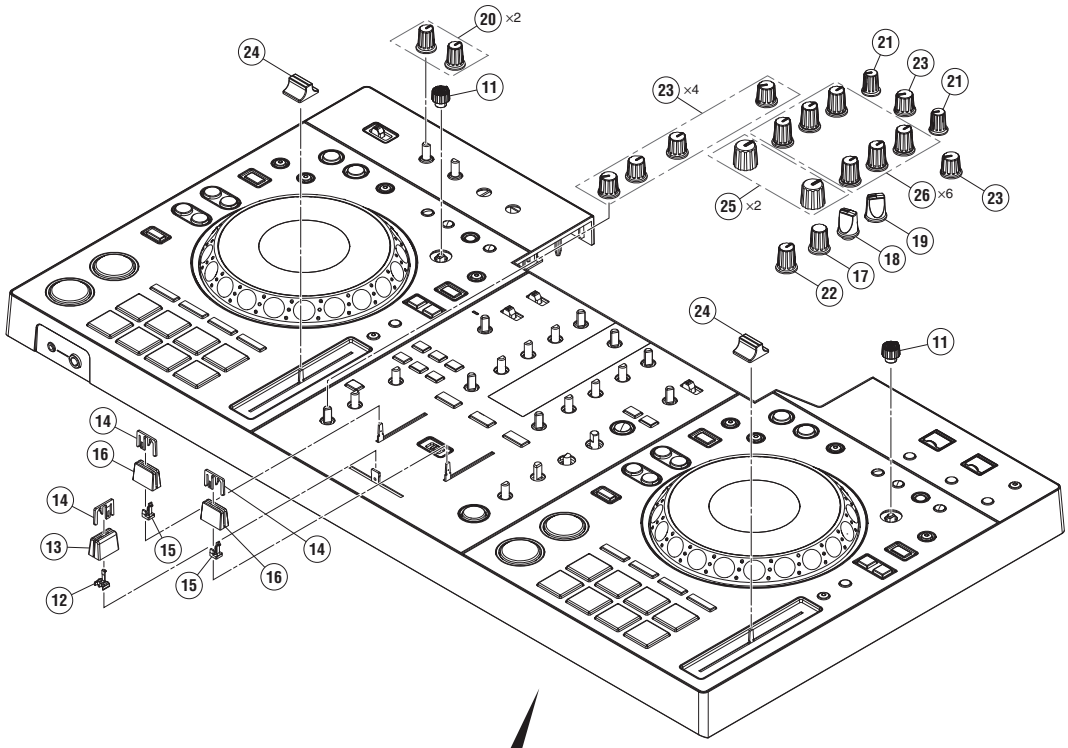

• Bottom view

Refer to
"9.5 CONTROL PANEL SECTION (2/3)".

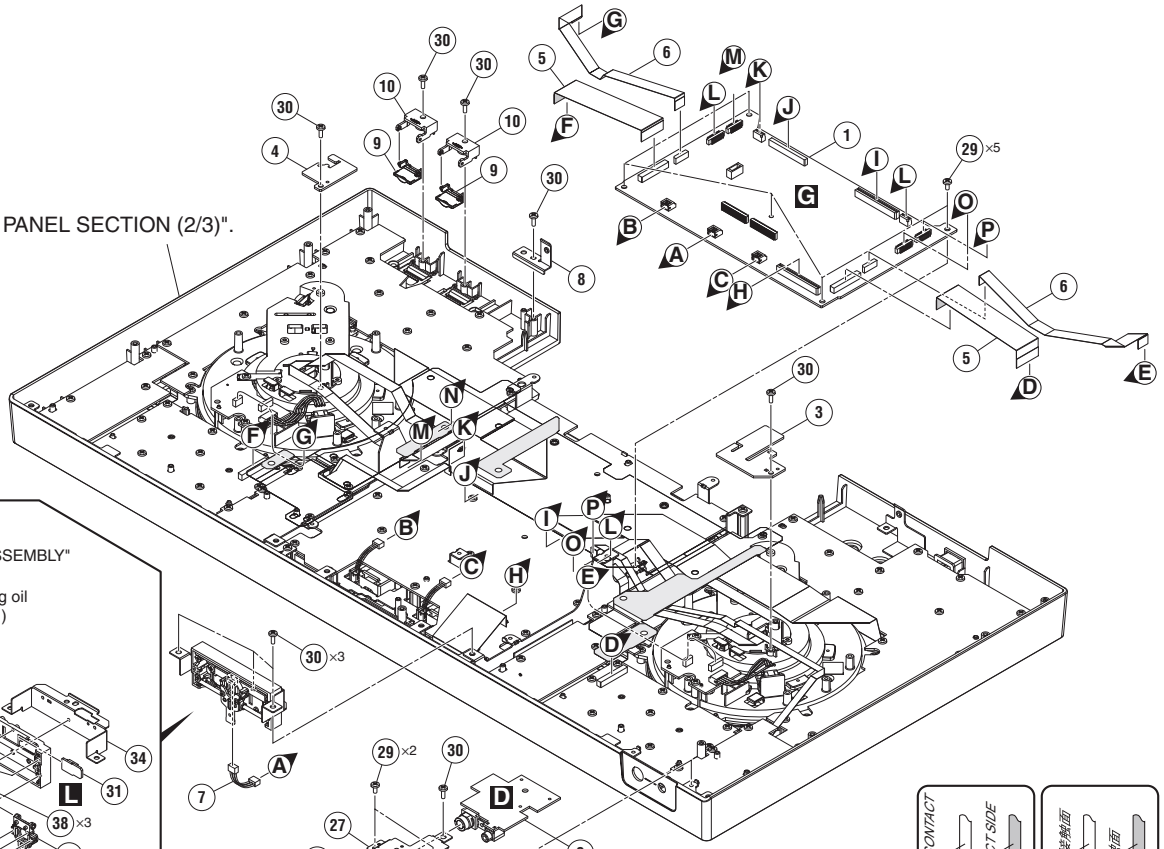

• Top view

Refer to "7. DISASSEMBLY"

Lubricating oil
(GYA1001)

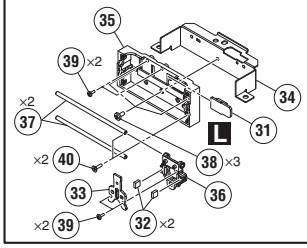

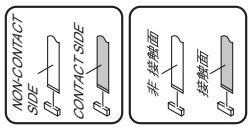

CONTROL PANEL SECTION (1/3) PARTS LIST

Mark	No.	Description	Part No.
	1	UCOM Assy	DWX4542
	2	HPJK Assy	DWX4549
	3	JHDL Assy	DWX4562
	4	JHDR Assy	DWX4563
	5	FFC/50P	DDD1686
	6	FFC	DDD2027
	7	Connector Assy	PF03PP-B05
	8	Stay	DNH3499
	9	Door	DNK6497
	10	Holder	DNK6710
	11	Knob/CFC	DAA1326
	12	Stopper	DNK6440
	13	Knob	DAC3238
	14	Slider Knob 2	DAC2685
	15	Slider Knob Stopper	DNK5888
	16	Knob	DAC3539
	17	Rotary SW Knob (C)	DAA1180
	18	Select Knob	DAA1205
	19	FX SEL Knob	DAA1213
	20	Knob/LBK	DAA1284
	21	Knob	DAA1417
	22	Knob	DAA1434
	23	Knob	DAA1435
	24	Knob/SLD	DNK5981
	25	Knob	DAA1462
	26	Knob	DAA1305
	27	Stay	DNH3470
	28	Nut M12	DBN1018
	29	Screw	BBZ30P060FTC
	30	Screw	BPZ30P080FNI
	31	CRFD Assy	DWX4536
	32	Cushion	DEC3640
	33	Lever	DNH3211
	34	Stay	DNH3301
	35	Holder	DNK6425
	36	Slider	DNK6426
	37	Guide Bar	VLL1514
	38	Screw	BBZ30P060FTC
	39	Screw	BPZ20P050FTC
	40	Screw	CPZ26P080FTC

9.5 CONTROL PANEL SECTION (2/3)

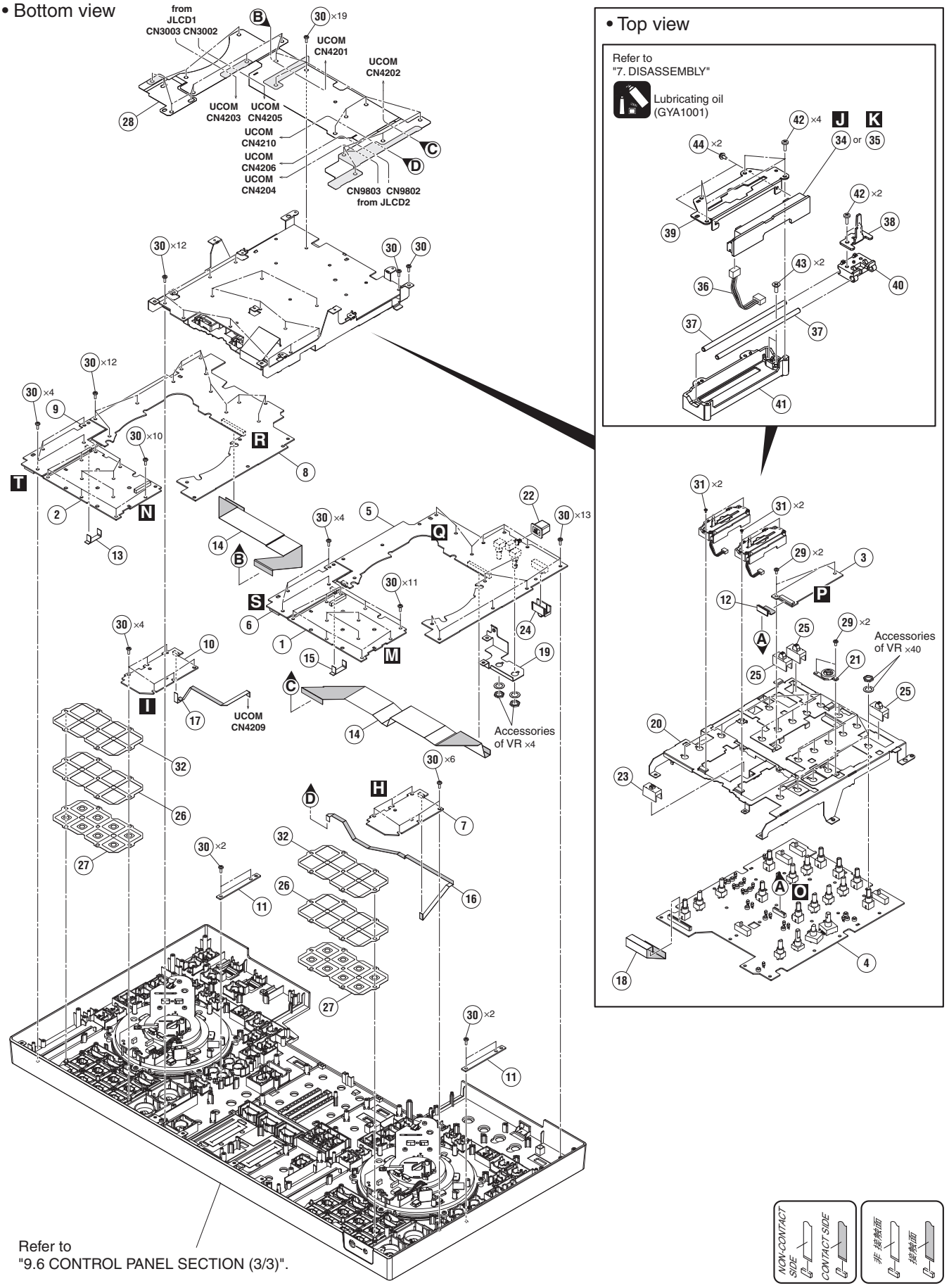

CONTROL PANEL SECTION (2/3) PARTS LIST

Mark	No.	Description	Part No.
	1	PAD1 Assy	DWX4533
	2	PAD2 Assy	DWX4534
	3	LVMB Assy	DWX4539
	4	MXRB Assy	DWX4547
	5	DCK1 Assy	DWX4550
	6	TMP1 Assy	DWX4551
	7	PLAY1 Assy	DWX4552
	8	DCK2 Assy	DWX4555
	9	TMP2 Assy	DWX4558
	10	PLAY2 Assy	DWX4559
	11	DKHD Assy	DWX4560
	12	FFC/19P	DDD1689
	13	FFC	DDD1745
	14	FFC	DDD1807
	15	FFC	DDD2017
	16	FFC	DDD2019
	17	FFC	DDD2022
	18	FFC	DDD2031
	19	Stay	DNH3300
	20	Stay	DNH3467
	21	Holder	DNK7010
	22	Power Knob	DAC2306
	23	Slide SW Cap (W)	DAC2401
	24	SW Cap	DAC2753
	25	Cap	DAC3136
	26	Sheet	DEC4044
	27	Sheet	DEC4036
	28	Barrier	DEC3985
	29	Screw	BBZ30P060FTC
	30	Screw	BPZ30P080FNI
	31	Screw	BSZ20P040FTB
	32	Sheet	DEC4045
	33	•••••	
	34	CHF1 Assy	DWX4553
	35	CHF2 Assy	DWX4554
	36	Connector Assy	PF03PP-B05
	37	Guide Shaft VK1	DLA1978
	38	Lever Plate	DNH2954
	39	VR Stay	DNH2955
	40	Slider Base	DNK5851
	41	Shaft Holder	DNK5852
	42	Screw	BPZ20P060FTC
	43	Screw	CPZ26P080FTC
	44	Screw	PMH20P040FTC

9.6 CONTROL PANEL SECTION (3/3)

• Bottom view

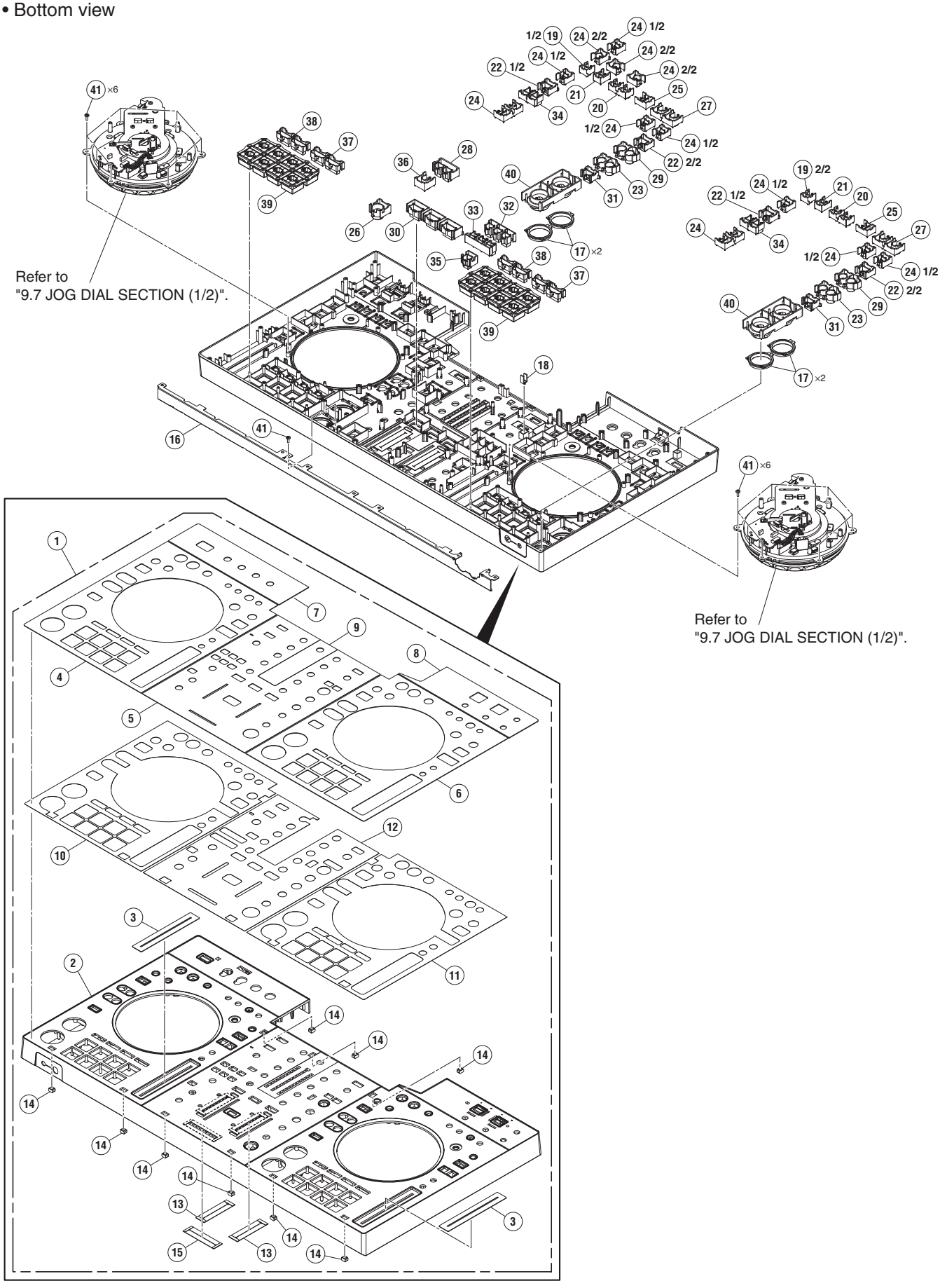

• **The position of the divided parts / 分割部品の取り付け位置**

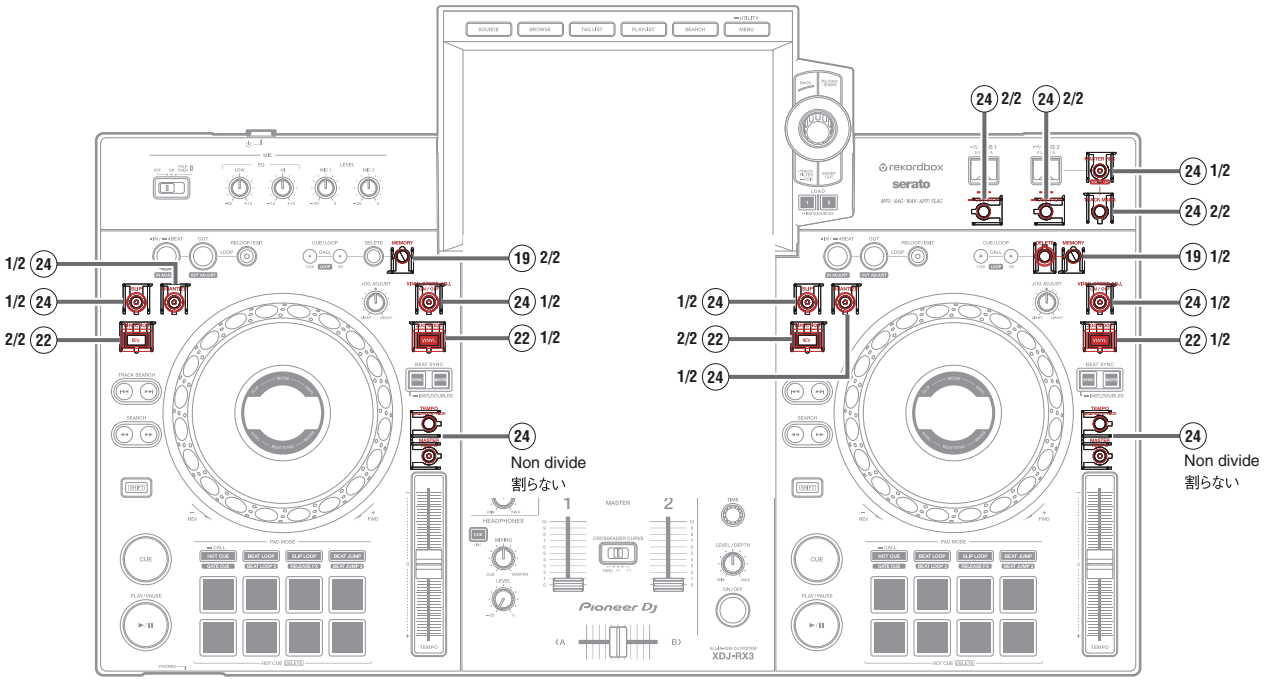

CONTROL PANEL SECTION (3/3) PARTS LIST

Mark	No.	Description	Part No.
	1	1..XDJ-RX3 Panel Service Assy	DEA1129
NSP	2	2..Control Panel	DNK7011
	3	2..Slide Sheet 1C	DAH2404
NSP	4	2..Plate	DAH3350
NSP	5	2..Plate	DAH3351
NSP	6	2..Plate	DAH3352
NSP	7	2..Plate	DAH3355
NSP	8	2..Plate	DAH3356
NSP	9	2..Plate	DAH3357
NSP	10	2..DS Tape	DEH1113
NSP	11	2..DS Tape	DEH1114
NSP	12	2..DS Tape	DEH1115
	13	2..Fader Packing	DEC3355
	14	2..Gasket/Jog	DEC3562
	15	2..Packing	DEC3642
	16	Frame	DNH3296
	17	Ring Lens (PLAY)	DNK5315
	18	Lens	DNK5862
	19	Button/TMP	DAC2845
	20	Button/CAL	DAC3020
	21	Button/DLT	DAC3021
	22	Button/RVL	DAC3023
	23	Button/SRC	DAC3028
	24	Button/MT	DAC3029
	25	Button/REL	DAC3030
	26	Button/EF	DAC3040
	27	Button/LOP	DAC3074
	28	Button/BEF	DAC3075
	29	Button/TSR	DAC3076
	30	Button	DAC3287
	31	Button	DAC3288
	32	Button	DAC3479
	33	Button	DAC3480
	34	Button	DAC3588
	35	Button	DAC3590
	36	Button	DAC3591
	37	Button	DAC3592
	38	Button	DAC3593
	39	Button	DEB2090
	40	Button Unit	DXB2214
	41	Screw	BPZ30P080FNI

9.7 JOG DIAL SECTION (1/2)

• Bottom view

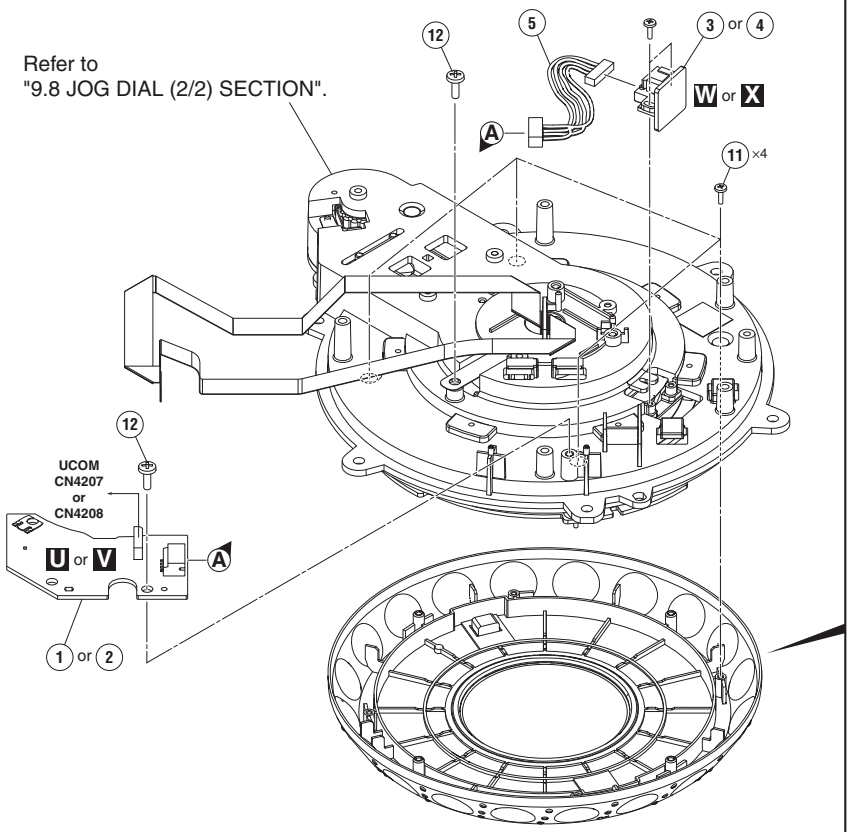

• Top view

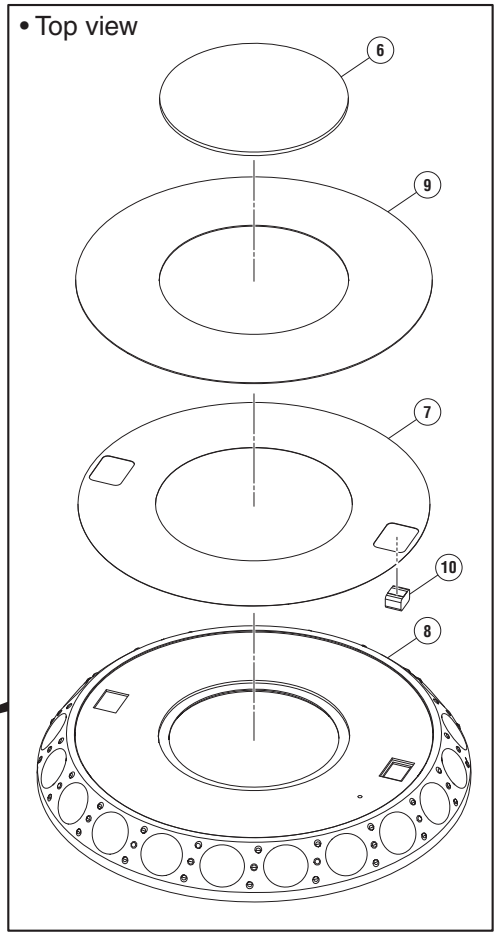

JOG DIAL SECTION (1/2) PARTS LIST

Mark	No.	Description	Part No.
	1	JOGT1 Assy	DWX4537
	2	JOGT2 Assy	DWX4538
	3	JOG1 Assy	DWX4556
	4	JOG2 Assy	DWX4557
	5	Connector Assy	PF04PP-B07
	6	Window	DAH3233
	7	DS Tape	DEH1096
	8	Jog Dial	DNK6912
	9	Plate	DAH3353
	10	Gasket/Jog	DEC3562
	11	Screw	BPZ20P060FTC
	12	Screw	BPZ30P080FTC

9.8 JOG DIAL SECTION (2/2)

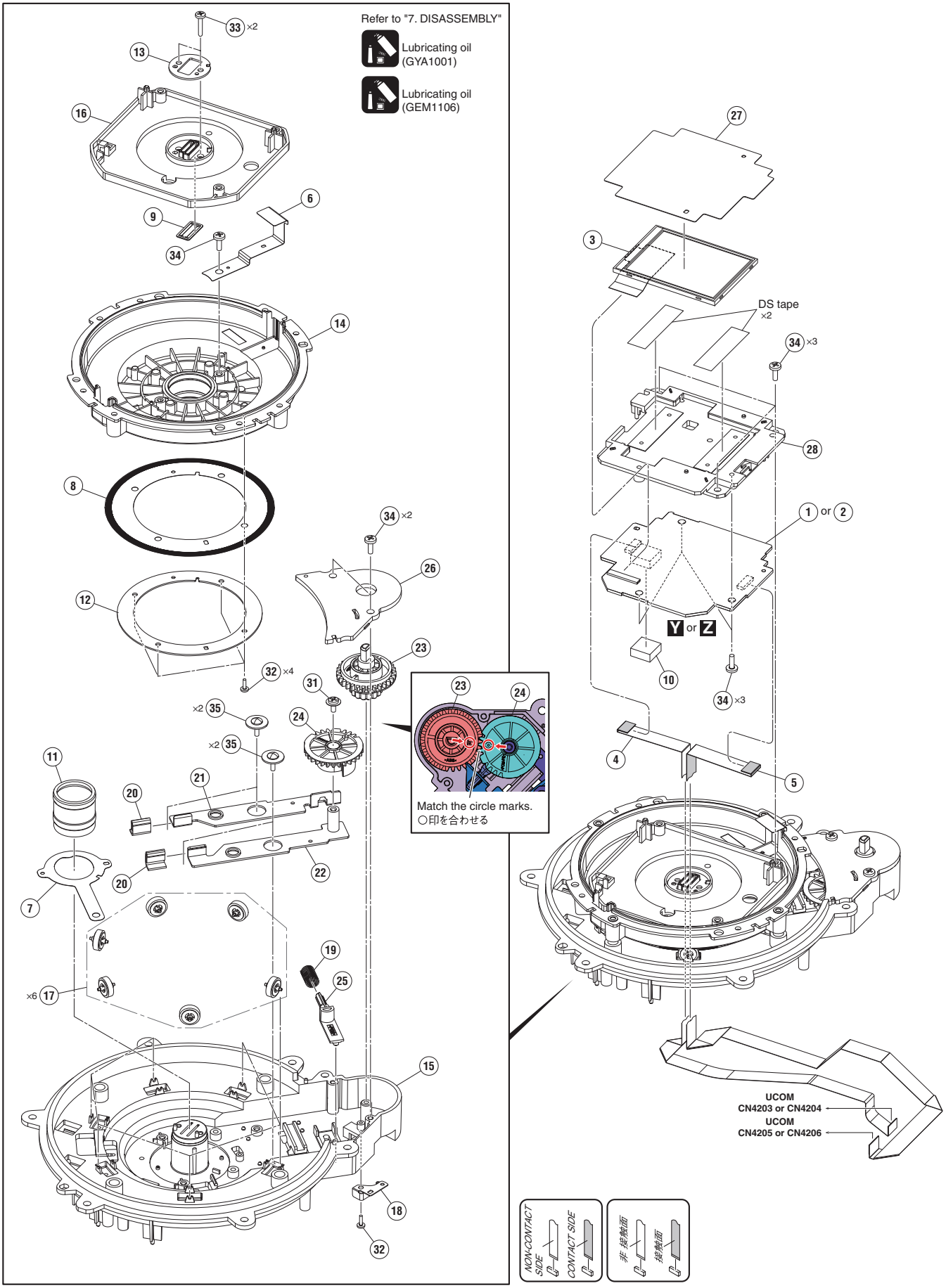

JOG DIAL SECTION (2/2) PARTS LIST

Mark No.	Description	Part No.
1	JLCD1 Assy	DWX4545
2	JLCD2 Assy	DWX4565
3	TFT LCD	DWX4226
4	FFC	DDD2023
5	FFC	DDD2024
6	Leaf Spring	DBK1391
7	Leaf Spring	DBK1392
8	Slit/Jog	DEC3515
9	Packing	DEC3820
10	Cushion	DEC3831
11	Shaft	DLA2266
12	Bracket/SLT	DNH3168
13	Cover	DNH3391
14	Jog Dial	DNK6820
15	Base	DNK6821
16	Holder	DNK6829
17	Roller	DXB2178
18	Leaf Spring	DBK1393
19	Coil Spring	DBH1823
20	Felt	DED1188
21	Lever	DNH3392
22	Lever	DNH3393
23	Gear	DNK6823
24	Cam	DNK6824
25	Pin	DNK6825
26	Cover	DNK6826
27	Sheet	DEC3980
28	Holder	DNK7009
29	•••••	
30	•••••	
31	Screw	AMZ30P060FTC
32	Screw	BPZ20P060FTC
33	Screw	BPZ26P160FTC
34	Screw	BPZ30P080FTC
35	DM Screw (FTC)	DBA1260

9.9 LCD SECTION

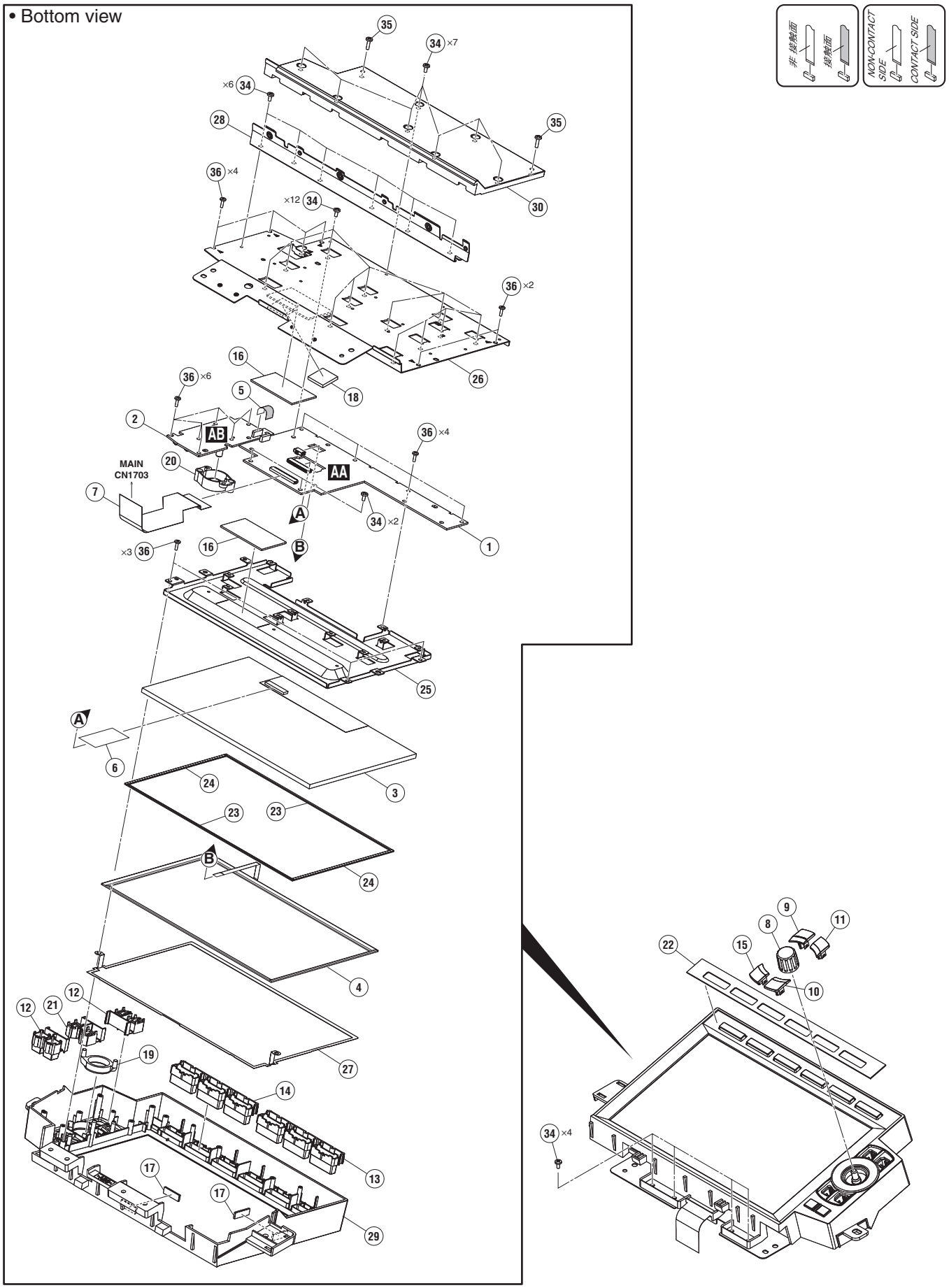

LCD SECTION PARTS LIST

Mark	No.	Description	Part No.
	1	MLCD Assy	DWX4532
	2	BENC Assy	DWX4541
	3	TFT LCD	DWX4601
	4	Touch Panel	DSX1151
	5	FFC	DDD2032
	6	FFC	DDD2033
	7	FFC	DDD2067
	8	Dial Knob	DAA1246
	9	Button	DAC3457
	10	Button	DAC3458
	11	Button	DAC3459
	12	Button	DAC3460
	13	Button	DAC3461
	14	Button	DAC3462
	15	Button	DAC3485
	16	Sheet	DEC3741
	17	Packing/LCD	DEC3565
	18	Cushion	DEC3830
	19	Lens	DNK6859
	20	Holder	DNK6860
	21	Button	DAC3589
	22	Plate	DAH3354
	23	Cushion	DEC3986
	24	Cushion	DEC3987
	25	Stay	DNH3469
	26	Bracket	DNH3474
	27	Plate	DNH3475
	28	Angle	DNH3476
	29	Panel	DNK7007
	30	Cover	DNK7008
	31	•••••	
	32	•••••	
	33	Screw	BBZ30P060FTB
	34	Screw	BBZ30P060FTC
	35	Screw	BBZ30P100FTB
	36	Screw	BPZ26P080FTC

12. PCB PARTS LIST

NOTES: ● *Parts marked by "NSP" are generally unavailable because they are not in our Master Spare Parts List.*

● *The ⚠ mark found on some component parts indicates the importance of the safety factor of the part. Therefore, when replacing, be sure to use parts of identical designation.*

● *When ordering resistors, first convert resistance values into code form as shown in the following examples.*

Ex.1 When there are 2 effective digits (any digit apart from 0), such as 560 ohm and 47 k ohm (tolerance is shown by J = 5%, and K = 10%).

560 Ω → 56 × 10^1 → 561 ····· RD1/4PU 5 6 1 J
47 kΩ → 47 × 10^3 → 473 ····· RD1/4PU 4 7 3 J
0.5 Ω → R50 ····· RN2H R 5 0 K
1 Ω → 1R0 ····· RS1P 1 R 0 K

Ex.2 When there are 3 effective digits (such as in high precision metal film resistors).

5.62 kΩ → 562 × 10^1 → 5621 ····· RN1/4PC 5 6 2 1 F

LIST OF ASSEMBLIES

Mark	No.	Description	Part No.
	1	MAIN ASSY	DWX4531
	1	MAIN ASSY	DWX4707
NSP	1	PADA ASSY	DWM2787
	2	MLCD ASSY	DWX4532
	2	PAD1 ASSY	DWX4533
	2	PAD2 ASSY	DWX4534
	2	USBA ASSY	DWX4535
	2	CRFD ASSY	DWX4536
	2	JOGT1 ASSY	DWX4537
	2	JOGT2 ASSY	DWX4538
	2	LVMB ASSY	DWX4539
	2	SUBP ASSY	DWX4540
	2	BENC ASSY	DWX4541
NSP	1	UCOM ASSY	DWM2788
	2	UCOM ASSY	DWX4542
	2	AOUT ASSY	DWX4543
	2	MCJK ASSY	DWX4544
NSP	1	JLCD ASSY	DWM2789
	2	JLCD1 ASSY	DWX4545
	2	JLCD2 ASSY	DWX4565
NSP	1	MXRA ASSY	DWM2790
	2	MXRB ASSY	DWX4547
	2	MTRM ASSY	DWX4548
	2	HPJK ASSY	DWX4549
NSP	1	PNL1 ASSY	DWM2791
	2	DCK1 ASSY	DWX4550
	2	TMP1 ASSY	DWX4551
	2	PLAY1 ASSY	DWX4552
	2	CHF1 ASSY	DWX4553
	2	CHF2 ASSY	DWX4554
NSP	1	PNL2 ASSY	DWM2792
	2	DCK2 ASSY	DWX4555
	2	JOG1 ASSY	DWX4556
	2	JOG2 ASSY	DWX4557
	2	TMP2 ASSY	DWX4558
	2	PLAY2 ASSY	DWX4559
	2	DKHD ASSY	DWX4560
	2	HPHD ASSY	DWX4561
	2	JHDL ASSY	DWX4562
	2	JHDR ASSY	DWX4563
	2	MUHD ASSY	DWX4684

Mark	No.	Description	Part No.
⚠		SW POWER SUPPLY	DWR1590

Mark	No.	Description	Part No.
		A a MAIN ASSY(DWX4531)	
		SEMICONDUCTORS	
⚠	IC	101,103	MM3542BF
⚠	IC	102,303	MM1856A50N
⚠	IC	301,302	BD9851EFV
⚠	IC	304	NJM78M15DL1A
⚠	IC	305	LM337KVUG3
⚠	IC	306,307	NJM78M05DL1A
⚠	IC	308	MM1856A33N
⚠	IC	501	MM3543BH
⚠	IC	502	MMPF0100F0AEP
⚠	IC	503,504	BD00IC0WEFJ
	IC	701	MCIMX6Q6AVT10AD
	IC	801,802	MT41K256M16TW107@V
NSP	IC	901	DYW2255*
		*Part number of the initial firmware equipped	
	IC	1001-1003,1503,2001	TC7SH08FUS2
⚠	IC	1201,1202	TPS2557DRB
	IC	1203	TUSB4020BIPHP
NSP	IC	2803	TUSB4020BIPHP
	IC	1501	TC7SZU04FUS2
	IC	1502	74LCX08FT
	IC	2002,2004,2005,2804	TC7SH08FUS2
	IC	2003	CS4344-CZZ@V
	IC	2007	NJM4565MD
	IC	2201,2401	NJM4580MD
⚠	IC	2202,2203,2402,2403	OPA2990SIDGSR@V
	IC	2204,2404,2603,2604	PCM1803ADB
⚠	IC	2601,2602	OPA2990SIDGSR@V
NSP	IC	2801	RTL8152B-VB-CG
	IC	2802	RTL8201F-VB-CG
	Q	103-110,1004,1503	LSAR523UB
	Q	111,114,1003	LSC4081UB
	Q	113,1502,1504,2805	LTC124EUB
⚠	Q	301	RSR020P05
⚠	Q	302,304	RSQ030P03
⚠	Q	303	RSQ045N03
	Q	305,2003,2009,2011	LSCR523UB
	Q	306	RTQ040P02

Mark	No.	Description	Part No.
	Q	1005,2203,2206,2403	LTA114EUB
	Q	1201,1202,1301,2002	RT3N22M
	Q	1203	HN1C01FUS1
	Q	1501	LTC014EEB
	Q	2001	RT3T22M
	Q	2004	HN1A01FUS1
	Q	2005,2006	2SK209
	Q	2007,2008,2017,2018	INC2002AC1
	Q	2010,2012,2801	LSAR523UB
	Q	2013,2015	2SCR573D3
	Q	2014,2016	2SAR573D3
	Q	2201,2202,2401,2402	2SK3320
	Q	2204,2205,2207,2404	LTC114EUB
	Q	2405,2407,2601,2603	LTC114EUB
	Q	2406,2602,2605	LTA114EUB
	Q	2604	LTC114EUB
	Q	2802	LTC024EEB
	D	101-108,306	1SS355L@V
	D	301,302,305	RB162MM-40TF
	D	303,304	RB551VM-30
	D	361,362	RB501VM-40
	D	501	RB160M-60
	D	1003,1004,1203-1208	DF2B5M4CT@V
	D	1201,1202	UDZV5R1
	D	2001	UDZV7R5
	D	2002	RB160M-30
	D	2004-2008	1SS355L@V
	D	2205-2208,2403-2406	DF2B18FU
	D	2601-2604	DAN217UM
	D	2605-2608	DF2B18FU

MISCELLANEOUS

	L	101,103 CHOKE COIL (2.2 u)	CTH1561
	L	104 POWER INDUCTOR	ATH7053
	L	301-304 POWER INDUCTOR (22 u)	ATH7011
	L	501 SMD SPL INDUCTOR (10 u)	CTH1524
	L	502-505 SMD SPL INDUCTOR	CTH1530
	L	901 CHIP SOLID INDUCTOR	XTL3010
	L	1002-1005,1301-1304 INDUCTOR	CTF1545
	L	1201,1206,1207,2807 COIL	ATH7015
	L	2808 SMD SPL INDUCTOR	CTH1531
	F	1201,1202,2801-2805 EMI FILTER	DTL1106
	JA	2201,2401 4P PIN JACK	DKB1090
	JA	2601 RCA JACK	DKB1131
	JA	2602 STEREO MINI JACK	XKN3017
	JA	2801 USB CONNECTOR	DKN1237
	KN	1201-1203 EARTH TERMINAL	OG-363065HD@V
	KN	2601,2801 SCREW PLATE	VNE1948
	X	1201,2803 RESONATOR (24 MHz)	CSS1773
	X	1501 CRYSTAL OSCILLATOR (22.5792 MHz)	DSS1233
	X	1502 RESONATOR (32.768 kHz)	CSS1807
	X	1503 CRYSTAL TRANSDUCER (24 MHz)	DSS1208
	X	2801,2802 CRYSTAL (25 MHz)	DSS1205
	CN	101 CONNECTOR	BM12BPASSTFT@V
	CN	1201,1202 CONNECTOR	AKM1276
	CN	1701,1702 FFC/FPC CONNECTOR	CKS6869
	CN	1703 FFC/FPC CONNECTOR	CKS6543
NSP	CN	1704 CONNECTOR	CKS3860
	CN	1705 CONNECTOR	CKS3863
	CN	1706,2001 CONNECTOR	AKM1277
	CN	1707 CONNECTOR	CKS3851
	VA	2201,2202,2401,2402 VARISTORS	EZJZ1V270RM
	VA	2601,2602 VARISTORS	EZJZ1V270RM

RESISTORS

	R	109	RS1/10SR223J
	R	116,119,139,151	RS1/16SS2201D
	R	117	RS1/16SS2701D
	R	120	RS1/16SS2200D
	R	121,303,319	RS1/16SS1502D
	R	132	RS1/16SS3902D
	R	137,507	RS1/16SS1202D
	R	138,2028,2029	RS1/16SS3300D
	R	148,306,308,336	RS1/16SS6802D
	R	149,2233,2234,2433	RS1/16SS2202D
	R	150	RS1/16SS5600D
	R	302,304,311,320	RS1/16SS1002D
	R	305,328,2235,2236	RS1/16SS3002D
	R	307	RS1/10SR3002D
	R	309	RS1/16SS1803D
	R	310	RS1/16SS5102D
	R	314	RS1/16SS5601D
	R	321,325	RS1/10SR330J
	R	322,327	RS1/10SR220J
	R	324	RS1/16SS4701D
	R	333	RS1/16SS6201D
	R	334	RS1/10SR6802D
	R	337,340,2239,2240	RS1/16SS1002D
	R	341	RS1/16SS1503D
	R	342	RS1/10SR5101D
	R	343	RS1/16SS6202D
	R	345	RS1/16SS2002D
	R	349	RS1/16SS3001D
	R	352	RS1/10SR222J
	R	357	RS1/10SR103J
	R	360,361	RS1/10SR6200D
	R	362	RS1/10SR75R0D
	R	363	RS1/10SR1200D
	R	505,2237,2238,2268	RS1/16SS2702D
	R	508,2241,2242,2441	RS1/16SS2201D
	R	509,2034,2035	RS1/16SS3301D
	R	515	RS1/10SR561J
	R	519	RS1/16SS1002F
	R	531,534	RS1/10SR3901D
	R	532,535	RS1/10SR1002D
	R	707,805,808	RS1/16SS2400F
	R	803,804,2050-2053	RS1/16SS1001D
	R	907,908,915	RAB4CQ680J
	R	918	RAB4CQ222J
	R	929,930	RAB4CQ220J
	R	1058,1064	RAB4CQ470J
	R	1203,1208	RS1/10SR2702F
	R	1205,1209	RS1/10SR5602F
	R	1223,2834	RS1/16SS4300D
	R	1224,2833	RS1/16SS9101D
	R	1232	RS1/16SS1201F
	R	1233	RS1/16SS6801D
	R	1243,1244	RS1/10SR102J
	R	1303,1304,1330-1333	RAB4CQ103J
	R	1326-1329,2814,2823	RAB4CQ472J

Mark	No.	Description	Part No.
	R	2022	RT0603DRD0747RL@V
	R	2030,2031,2628,2629	RS1/16SS3901D
	R	2032,2033	RS1/10SR1502D
	R	2042,2044	RS1/8SQ680J
	R	2046-2049	RS1/10SR3301D
	R	2054-2057	RS1/16SS1801D
	R	2058-2065	RS1/4SA220J
	R	2201,2202,2207,2208	RS1/16SS1000D
	R	2203,2204,2215,2216	RS1/16SS2000D
	R	2205,2206,2220,2221	RS1/16SS4702D
	R	2211-2214,2411-2414	RT0603DRD071K2L@V
	R	2217-2219,2222	RT0603DRD071K5L@V
	R	2224,2226,2424,2426	RT0603DRD071KL@V
	R	2231,2232,2431,2432	RS1/16SS2703D
	R	2266,2267,2436,2465	RS1/16SS3002D
	R	2269,2437,2438,2467	RS1/16SS2702D
	R	2401,2402,2407,2408	RS1/16SS1000D
	R	2403,2404,2415,2416	RS1/16SS2000D
	R	2405,2406,2420,2421	RS1/16SS4702D
	R	2417-2419,2422	RT0603DRD071K5L@V
	R	2434	RS1/16SS2202D
	R	2439,2440,2855	RS1/16SS1002D
	R	2442,2630,2631	RS1/16SS2201D
	R	2466,2469	RS1/16SS3002D
	R	2468	RS1/16SS2702D
	R	2601-2604	RS1/16SS1000D
	R	2605,2606,2609,2610	RS1/16SS2000D
	R	2607,2608,2613,2614	RS1/16SS4702D
	R	2619,2621,2624,2626	RS1/16SS3302D
	R	2632,2633	RS1/10SR2200D
	R	2805	RS1/16SS91R0F
	R	2806	RS1/16SS2401D
	R	2811	RS1/16SS2491F
	R	2854	RS1/16SS9102F
	Other Resistors		RS1/16SS###J

CAPACITORS

	C	101-103,1013,1217	0402N101J500CT
	C	104,113-115,127	0402B104K160CT
	C	105-107,356,359	0402N102J500CT
	C	108 (4 700 pF)	ACE7115
	C	109,2023,2219,2220	CEVW101M16
	C	110-112,131,301	0402B103K160CT
	C	116 (0.01 uF)	ACE7097
	C	117,119,386,387 (0.1 uF)	ACE7100
	C	118,122,134,153 (10 uF)	DCH1263
	C	123	CEHVAW101M16
	C	124,392,393 (1 uF)	ACE7129
	C	125,347,353 (10 uF)	CCG1236
	C	128,175,405,2213 (100 uF/16 V)	CCH1565
	C	129,357,360,2010 (220 uF/16 V)	CCH2090
	C	130,144,345,350	0603B104K250CT
	C	132,135,138,139	0402B104K160CT
	C	136,158,171,173	0402B102K500CT
	C	140,162	0402B473K500CT
	C	141-143,148,149	0402B104K160CT
	C	145	0402B681K500CT
	C	151,152,167,168	0805X106K250CT
	C	154,316,321,323 (10 uF)	DCH1263
	C	156,161,163,170	0402B104K160CT
	C	159,304,324,326	0603X105K250CT
	C	164	0402B331K500CT
	C	169	CEHVW470M16
	C	172,174,346,352	0402B104K160CT
	C	302,512,1201,1205	0402B103K160CT
	C	303,335,338	1206B105K160CT
	C	305	0402N680J500CT
	C	308	0402X224K500CT
	C	309	0402B332K500CT
	C	319,325,2858	0805X226M160CT
	C	320,322	0402N561J500CT
	C	329,332,333,336	0805B105K250CT
	C	330,396,400,501 (10 uF)	DCH1263
	C	334,337,521,524	0603X105K250CT
	C	341,344	0402B682K500CT
	C	348,354,514,515	0805X106K250CT
	C	349	0402N271J500CT
	C	362,363,373,381	0402N102J500CT
	C	364,365	0603N101J500CT
	C	371,372,374,376	0805B105K250CT
	C	375	0805B334K500CT
	C	377	CEHVW100M25
	C	378,1742,1743,1746	0603B104K250CT
	C	379,408	0402X105K160CT
	C	382,383	0402B103K250CT
	C	384,385,398,402	0402N102J500CT
	C	394,395 (100 uF/25 V)	CCH2000
	C	399,404,2874 (2.2 uF)	CCG1218
	C	403 (0.01 uF)	ACE7113
	C	406,407,511,567	0402N102J500CT
	C	409,411,503,508	0402B102K500CT
	C	410,412,1714,2232	0402B104K250CT
	C	502,505,507,513	0402B104K160CT
	C	506	0402B153K160CT
	C	516 (100 uF/6.3 V)	ACH7275
	C	517,518	0805X226K6R3CT
	C	522,534,554,561	0603X474K250CT
	C	523,526,531,535	0402B104K160CT
	C	525,701,703-710	0402X224K250CT
	C	527,719,722,728	0805X106K250CT
	C	528,543,568,572	0603X105K250CT
	C	530,533,536,538 (4.7 uF)	CCG1201
	C	537,539,540,544	0402B104K160CT
	C	541,542,545,562 (4.7 uF)	CCG1201
	C	546,548,553,556	0402B104K160CT
	C	547,549-552,555 (22 uF)	DCH1256
	C	557-560,569-571 (22 uF)	DCH1256
	C	573-576,2837,2838	0603X106K100CT
	C	577,578,1523-1525	0402B102K500CT
	C	702,711,715,734 (22 uF)	DCH1256
	C	712-714,716-718	0402X224K250CT
	C	720,721,723-727	0402X224K250CT
	C	729-733,735-739	0402X224K250CT
	C	740,807,811,812	0402B104K160CT
	C	741,743,745-747	0402X224K250CT
	C	742,744,748,750 (22 uF)	DCH1256
	C	749,751-755	0402X224K250CT
	C	801-806,813-824	0402X224K250CT
	C	808,826,1202,1208	0805X106K250CT

Mark	No.	Description	Part No.
	C	809,810,2825,2826	0603X105K250CT
	C	825,1004,1006,1015	0402B104K160CT
	C	827-832,904	0402X224K250CT
	C	901,1504,1506,2801	0402N100J500CT
	C	905,906,1005,1007	0402N102J500CT
	C	1002,1003,1008,1009	0402N470J500CT
	C	1011,1014,1020,1021	0402N470J500CT
	C	1016,1019,1251,1253	0402N102J500CT
	C	1203,1209,1224,1226	0402B104K160CT
	C	1207,1213,1223,1225	0402B103K160CT
	C	1210,1211,1214,1215	0805X106K250CT
	C	1218,2207,2208,2211	0402N101J500CT
	C	1221,1222,1252,2802	0805X106K250CT
	C	1227,1229,1235-1238	0402B104K160CT
	C	1228,1230,1232,1234	0402B103K160CT
	C	1231,1233,2866,2873	0402N120J500CT
	C	1239,1240,1242	0402B103K160CT
	C	1241,1243,1248-1250	0402B104K160CT
	C	1244-1247,1258,1505	0402B103K160CT
	C	1254,1503,1512,1517	0402N102J500CT
	C	1257,1501,1502,1511	0402B104K160CT
	C	1302,1304,1305	0402N470J500CT
	C	1510,2009,2021,2237	0402B103K160CT
	C	1516,1707,1708,1710	0402B104K160CT
	C	1518	0402N150J500CT
	C	1709,1711,1713,1715	0402B102K500CT
	C	1712,1727,1735,1745	0402B104K160CT
	C	1734,1744,1759,1761	0402B102K500CT
	C	1749,2040,2042,2202	0603B104K250CT
	C	1753,1760,1762,2007	0402B104K160CT
	C	1755,1757,2003	0402B104K500CT
	C	2001,2002,2014,2015	0402N102J500CT
	C	2011,2240-2242,2244	CEVW100M16
	C	2012,2022,2243,2245	0402B104K160CT
	C	2020,2031,2032,2850	0402N102J500CT
	C	2026,2027	CEVW470M16
	C	2033,2034	0402N121J500CT
	C	2035,2036	0402N330J500CT
	C	2039,2041,2221,2222	0402N331J500CT
	C	2049	0603X475K100CT
	C	2201,2205,2401,2405	0402B102K500CT
	C	2203,2204,2403,2404	0402N221J500CT
	C	2206,2402,2406,2603	0603B104K250CT
	C	2209,2210,2214,2215	0402N471J500CT
	C	2212,2229,2230,2238	0402N101J500CT
	C	2216 (100 uF/16 V)	CCH1565
	C	2217,2218,2415,2416	0402B223K500CT
	C	2223,2224,2421,2422 (0.012 uF)	ACE7125
	C	2225,2228,2423,2425 (3 300 pF)	DCG1049
	C	2231,2233,2429,2431	CEVW101M25
	C	2234,2236,2274,2430	0402B104K250CT
	C	2239,2275,2277,2407	0402N101J500CT
	C	2246 (22 uF)	DCH1256
	C	2247,2250,2438-2440	CEVW100M16
	C	2248,2249,2252,2441	0402B104K160CT
	C	2251,2253,2276,2435	0402B103K160CT
	C	2408,2411,2412,2427	0402N101J500CT
	C	2409,2410,2413,2414	0402N471J500CT
	C	2417,2418	CEVW101M16

Mark	No.	Description	Part No.
	C	2419,2420	0402N331J500CT
	C	2428,2436,2437,2475	0402N101J500CT
	C	2433,2472,2474	0402B104K250CT
	C	2442,2445,2449,2630	CEVW100M16
	C	2443,2446,2448,2451	0402B104K160CT
	C	2447,2450,2473,2615	0402B103K160CT
	C	2476,2611-2614,2833	0402N101J500CT
	C	2481,2482	0603N102J500CT
	C	2602,2604,2845	0402B102K500CT
	C	2605	0603B104K250CT
	C	2607-2610	0402N221J500CT
	C	2616,2627,2677,2831	0402B103K160CT
	C	2618,2626	CEVW101M25
	C	2622-2625	0402B104K250CT
	C	2628,2629,2657,2659	0402N471J500CT
	C	2631,2634-2637,2640	CEVW100M16
	C	2638,2639,2642,2643	0402B104K160CT
	C	2641,2646,2647,2652	CEVW100M16
	C	2648-2651,2654,2655	0402B104K160CT
	C	2653	CEVW100M16
	C	2803,2805,2821,2830	0805X106K250CT
	C	2804	0402N100J500CT
	C	2806,2808-2816	0402B104K160CT
	C	2807,2817	0402N7R0C500CT
	C	2818-2820,2822,2824	0402B104K160CT
	C	2827,2828,2839,2841	0402B104K160CT
	C	2829	0603X105K250CT
	C	2832	0805X106K250CT
	C	2834	0402N101J500CT
	C	2840,2842,2844,2847	0402B103K160CT
	C	2843,2846,2849,2852	0402B104K160CT
	C	2848,2851,2854,2857	0402B103K160CT
	C	2853,2855,2856,2860	0402B104K160CT
	C	2859,2861,2864,2867	0402B103K160CT
	C	2862,2863,2865,2868	0402B104K160CT
	C	2869,2949	0402B103K160CT
	C	2870,2871,2948	0402B104K160CT
	C	2872	0402N471J500CT
	C	2943	0402N102J500CT

Ab MAIN ASSY(DWX4707)

SEMICONDUCTORS

	IC	101,103	MM3542BF
	IC	102,303	MM1856A50N
	IC	301,302	BD9851EFV
	IC	304	NJM78M15DL1A
	IC	305	LM337KVUG3
	IC	306,307	NJM78M05DL1A
	IC	308	MM1856A33N
	IC	501	MM3543BH
	IC	502	MMPF0100F0AEP
	IC	503,504	BD00IC0WEFJ
	IC	701	MCIMX6Q6AVT10AD
	IC	801,802	MT41K256M16TW107@V
NSP	IC	901	DYW2255
	*Part number of the initial firmware equipped		
	IC	1001-1003,1503,2001	TC7SH08FUS2
	IC	1201,1202	TPS2557DRB
	IC	1203	TUSB4020BIPHP

Mark	No.	Description	Part No.
NSP	IC	2803	TUSB4020BIPHP
	IC	1501	TC7SZU04FUS2
	IC	1502	74LCX08FT
	IC	2002,2004,2005,2804	TC7SH08FUS2
	IC	2003	CS4344-CZZ@V
	IC	2007	NJM4565MD
	IC	2201,2401	NJM4580MD
	IC	2202,2203,2402,2403	OPA2990SIRUGR@V
	IC	2204,2404,2603,2604	PCM1803ADB
	IC	2601,2602	OPA2990SIRUGR@V
NSP	IC	2801	RTL8152B-VB-CG
	IC	2802	RTL8201F-VB-CG
	Q	103-110,1004,1503	LSAR523UB
	Q	111,114,1003	LSC4081UB
	Q	113,1502,1504,2805	LTC124EUB
	Q	301	RSR020P05
	Q	302,304	RSQ030P03
	Q	303	RSQ045N03
	Q	305,2003,2009,2011	LSCR523UB
	Q	306	RTQ040P02
	Q	1005,2203,2206,2403	LTA114EUB
	Q	1201,1202,1301,2002	RT3N22M
	Q	1203	HN1C01FUS1
	Q	1501	LTC014EEB
	Q	2001	RT3T22M
	Q	2004	HN1A01FUS1
	Q	2005,2006	2SK209
	Q	2007,2008,2017,2018	INC2002AC1
	Q	2010,2012,2801	LSAR523UB
	Q	2013,2015	2SCR573D3
	Q	2014,2016	2SAR573D3
	Q	2201,2202,2401,2402	2SK3320
	Q	2204,2205,2207,2404	LTC114EUB
	Q	2405,2407,2601,2603	LTC114EUB
	Q	2406,2602,2605	LTA114EUB
	Q	2604	LTC114EUB
	Q	2802	LTC024EEB
	D	101-108,306	1SS355L@V
	D	301,302,305	RB162MM-40TF
	D	303,304	RB551VM-30
	D	361,362	RB501VM-40
	D	501	RB160M-60
	D	1003,1004,1203-1208	DF2B5M4CT@V
	D	1201,1202	UDZV5R1
	D	2001	UDZV7R5
	D	2002	RB160M-30
	D	2004-2008	1SS355L@V
	D	2205-2208,2403-2406	DF2B18FU
	D	2601-2604	DAN217UM
	D	2605-2608	DF2B18FU

MISCELLANEOUS

	L	101,103 CHOKE COIL (22 uH)	CTH1561
	L	104 POWER INDUCTOR	ATH7053
	L	301-304 POWER INDUCTOR (22 uH)	ATH7011
	L	501 SMD SPL INDUCTOR (10 uH)	CTH1524
	L	502-505 SMD SPL INDUCTOR	CTH1530
	L	901 CHIP SOLID INDUCTOR	XTL3010
	L	1002-1005,1301-1304 INDUCTOR	CTF1545
	L	1201,1206,1207,2807 COIL	ATH7015
	L	2808 SMD SPL INDUCTOR	CTH1531
	F	1201,1202,2801-2805 EMI FILTER	DTL1106
	JA	2201,2401 4P PIN JACK	DKB1090
	JA	2601 RCA JACK	DKB1131
	JA	2602 STEREO MINI JACK	XKN3017
	JA	2801 USB CONNECTOR	DKN1237
	KN	1201-1203 EARTH TERMINAL	OG-363065HD@V
	KN	2601,2801 SCREW PLATE	VNE1948
	X	1201,2803 RESONATOR (24 MHz)	CSS1773
	X	1501 CRYSTAL OSCILLATOR (22.5792 MHz)	DSS1233
	X	1502 RESONATOR (32.768 kHz)	CSS1807
	X	1503 CRYSTAL TRANSDUCER (24 MHz)	DSS1208
	X	2801,2802 CRYSTAL (25 MHz)	DSS1205
	CN	101 CONNECTOR	BM12BPASSTFT@V
	CN	1201,1202 CONNECTOR	AKM1276
	CN	1701,1702 FFC/FPC CONNECTOR	CKS6869
	CN	1703 FFC/FPC CONNECTOR	CKS6543
NSP	CN	1704 CONNECTOR	CKS3860
	CN	1705 CONNECTOR	CKS3863
	CN	1706,2001 CONNECTOR	AKM1277
	CN	1707 CONNECTOR	CKS3851
	VA	2201,2202,2401,2402 VARISTORS	EZJZ1V270RM
	VA	2601,2602 VARISTORS	EZJZ1V270RM

RESISTORS

	R	109	RS1/10SR223J
	R	116,119,139,151	RS1/16SS2201D
	R	117	RS1/16SS2701D
	R	120	RS1/16SS2200D
	R	121,303,319	RS1/16SS1502D
	R	132	RS1/16SS3902D
	R	137,507	RS1/16SS1202D
	R	138,2028,2029	RS1/16SS3300D
	R	148,306,308,336	RS1/16SS6802D
	R	149,2233,2234,2433	RS1/16SS2202D
	R	150	RS1/16SS5600D
	R	302,304,311,320	RS1/16SS1002D
	R	305,328,2235,2236	RS1/16SS3002D
	R	307	RS1/10SR3002D
	R	309	RS1/16SS1803D
	R	310	RS1/16SS5102D
	R	314	RS1/16SS5601D
	R	321,325	RS1/10SR330J
	R	322,327	RS1/10SR220J
	R	324	RS1/16SS4701D
	R	333	RS1/16SS6201D
	R	334	RS1/10SR6802D
	R	337,340,2239,2240	RS1/16SS1002D
	R	341	RS1/16SS1503D
	R	342	RS1/10SR5101D
	R	343	RS1/16SS6202D
	R	345	RS1/16SS2002D
	R	349	RS1/16SS3001D
	R	352	RS1/10SR222J
	R	357	RS1/10SR103J
	R	360,361	RS1/10SR6200D
	R	362	RS1/10SR75R0D
	R	363	RS1/10SR1200D
	R	505,2237,2238,2268	RS1/16SS2702D
	R	508,2241,2242,2441	RS1/16SS2201D

Mark	No.	Description	Part No.
	R	509,2034,2035	RS1/16SS3301D
	R	515	RS1/10SR561J
	R	519	RS1/16SS1002F
	R	531,534	RS1/10SR3901D
	R	532,535	RS1/10SR1002D
	R	707,805,808	RS1/16SS2400F
	R	803,804,2050-2053	RS1/16SS1001D
	R	907,908,915	RAB4CQ680J
	R	918	RAB4CQ222J
	R	929,930	RAB4CQ220J
	R	1058,1064	RAB4CQ470J
	R	1203,1208	RS1/10SR2702F
	R	1205,1209	RS1/10SR5602F
	R	1223,2834	RS1/16SS4300D
	R	1224,2833	RS1/16SS9101D
	R	1232	RS1/16SS1201F
	R	1233	RS1/16SS6801D
	R	1243,1244	RS1/10SR102J
	R	1303,1304,1330-1333	RAB4CQ103J
	R	1326-1329,2814,2823	RAB4CQ472J
	R	2022	RT0603DRD0747RL@V
	R	2030,2031,2628,2629	RS1/16SS3901D
	R	2032,2033	RS1/10SR1502D
	R	2042,2044	RS1/8SQ680J
	R	2046-2049	RS1/10SR3301D
	R	2054-2057	RS1/16SS1801D
	R	2058-2065	RS1/4SA220J
	R	2201,2202,2207,2208	RS1/16SS1000D
	R	2203,2204,2215,2216	RS1/16SS2000D
	R	2205,2206,2220,2221	RS1/16SS4702D
	R	2211-2214,2411-2414	RT0603DRD071K2L@V
	R	2217-2219,2222	RT0603DRD071K5L@V
	R	2224,2226,2424,2426	RT0603DRD071KL@V
	R	2231,2232,2431,2432	RS1/16SS2703D
	R	2266,2267,2436,2465	RS1/16SS3002D
	R	2269,2437,2438,2467	RS1/16SS2702D
	R	2401,2402,2407,2408	RS1/16SS1000D
	R	2403,2404,2415,2416	RS1/16SS2000D
	R	2405,2406,2420,2421	RS1/16SS4702D
	R	2417-2419,2422	RT0603DRD071K5L@V
	R	2434	RS1/16SS2202D
	R	2439,2440,2855	RS1/16SS1002D
	R	2442,2630,2631	RS1/16SS2201D
	R	2466,2469	RS1/16SS3002D
	R	2468	RS1/16SS2702D
	R	2601-2604	RS1/16SS1000D
	R	2605,2606,2609,2610	RS1/16SS2000D
	R	2607,2608,2613,2614	RS1/16SS4702D
	R	2619,2621,2624,2626	RS1/16SS3302D
	R	2632,2633	RS1/10SR2200D
	R	2805	RS1/16SS91R0F
	R	2806	RS1/16SS2401D
	R	2811	RS1/16SS2491F
	R	2854	RS1/16SS9102F
	Other Resistors		RS1/16SS###J

CAPACITORS

Mark	No.	Description	Part No.
	C	101-103,1013,1217	0402N101J500CT
	C	104,113-115,127	0402B104K160CT
	C	105-107,356,359	0402N102J500CT
	C	108 (4 700 pF)	ACE7115
	C	109,2023,2219,2220	CEVW101M16
	C	110-112,131,301	0402B103K160CT
	C	116 (0.01 uF)	ACE7097
	C	117,119,386,387 (0.1 uF)	ACE7100
	C	118,122,134,153 (10 uF)	DCH1263
	C	123	CEHVAW101M16
	C	124,392,393 (1 uF)	ACE7129
	C	125,347,353 (10 uF)	CCG1236
	C	128,175,405,2213 (100 uF/16 V)	CCH1565
	C	129,357,360,2010 (220 uF/16 V)	CCH2090
	C	130,144,345,350	0603B104K250CT
	C	132,135,138,139	0402B104K160CT
	C	136,158,171,173	0402B102K500CT
	C	140,162	0402B473K500CT
	C	141-143,148,149	0402B104K160CT
	C	145	0402B681K500CT
	C	151,152,167,168	0805X106K250CT
	C	154,316,321,323 (10 uF)	DCH1263
	C	156,161,163,170	0402B104K160CT
	C	159,304,324,326	0603X105K250CT
	C	164	0402B331K500CT
	C	169	CEHVW470M16
	C	172,174,346,352	0402B104K160CT
	C	302,512,1201,1205	0402B103K160CT
	C	303,335,338	1206B105K160CT
	C	305	0402N680J500CT
	C	308	0402X224K500CT
	C	309	0402B332K500CT
	C	319,325,2858	0805X226M160CT
	C	320,322	0402N561J500CT
	C	329,332,333,336	0805B105K250CT
	C	330,396,400,501 (10 uF)	DCH1263
	C	334,337,521,524	0603X105K250CT
	C	341,344	0402B682K500CT
	C	348,354,514,515	0805X106K250CT
	C	349	0402N271J500CT
	C	362,363,373,381	0402N102J500CT
	C	364,365	0603N101J500CT
	C	371,372,374,376	0805B105K250CT
	C	375	0805B334K500CT
	C	377	CEHVW100M25
	C	378,1742,1743,1746	0603B104K250CT
	C	379,408	0402X105K160CT
	C	382,383	0402B103K250CT
	C	384,385,398,402	0402N102J500CT
	C	394,395 (100 uF/25 V)	CCH2000
	C	399,404,2874 (22 uF)	CCG1218
	C	403 (0.01 uF)	ACE7113
	C	406,407,511,567	0402N102J500CT
	C	409,411,503,508	0402B102K500CT
	C	410,412,1714,2232	0402B104K250CT
	C	502,505,507,513	0402B104K160CT
	C	506	0402B153K160CT
	C	516 (100 uF/6.3 V)	ACH7275
	C	517,518	0805X226K6R3CT
	C	522,534,554,561	0603X474K250CT
	C	523,526,531,535	0402B104K160CT
	C	525,701,703-710	0402X224K250CT
	C	527,719,722,728	0805X106K250CT

Mark	No.	Description	Part No.
	C	528,543,568,572	0603X105K250CT
	C	530,533,536,538 (4.7 uF)	CCG1201
	C	537,539,540,544	0402B104K160CT
	C	541,542,545,562 (4.7 uF)	CCG1201
	C	546,548,553,556	0402B104K160CT
	C	547,549-552,555 (22 uF)	DCH1256
	C	557-560,569-571 (22 uF)	DCH1256
	C	573-576,2837,2838	0603X106K100CT
	C	577,578,1523-1525	0402B102K500CT
	C	702,711,715,734 (22 uF)	DCH1256
	C	712-714,716-718	0402X224K250CT
	C	720,721,723-727	0402X224K250CT
	C	729-733,735-739	0402X224K250CT
	C	740,807,811,812	0402B104K160CT
	C	741,743,745-747	0402X224K250CT
	C	742,744,748,750 (22 uF)	DCH1256
	C	749,751-755	0402X224K250CT
	C	801-806,813-824	0402X224K250CT
	C	808,826,1202,1208	0805X106K250CT
	C	809,810,2825,2826	0603X105K250CT
	C	825,1004,1006,1015	0402B104K160CT
	C	827-832,904	0402X224K250CT
	C	901,1504,1506,2801	0402N100J500CT
	C	905,906,1005,1007	0402N102J500CT
	C	1002,1003,1008,1009	0402N470J500CT
	C	1011,1014,1020,1021	0402N470J500CT
	C	1016,1019,1251,1253	0402N102J500CT
	C	1203,1209,1224,1226	0402B104K160CT
	C	1207,1213,1223,1225	0402B103K160CT
	C	1210,1211,1214,1215	0805X106K250CT
	C	1218,2207,2208,2211	0402N101J500CT
	C	1221,1222,1252,2802	0805X106K250CT
	C	1227,1229,1235-1238	0402B104K160CT
	C	1228,1230,1232,1234	0402B103K160CT
	C	1231,1233,2866,2873	0402N120J500CT
	C	1239,1240,1242	0402B103K160CT
	C	1241,1243,1248-1250	0402B104K160CT
	C	1244-1247,1258,1505	0402B103K160CT
	C	1254,1503,1512,1517	0402N102J500CT
	C	1257,1501,1502,1511	0402B104K160CT
	C	1302,1304,1305	0402N470J500CT
	C	1510,2009,2021,2237	0402B103K160CT
	C	1516,1707,1708,1710	0402B104K160CT
	C	1518	0402N150J500CT
	C	1709,1711,1713,1715	0402B102K500CT
	C	1712,1727,1735,1745	0402B104K160CT
	C	1734,1744,1759,1761	0402B102K500CT
	C	1749,2040,2042,2202	0603B104K250CT
	C	1753,1760,1762,2007	0402B104K160CT
	C	1755,1757,2003	0402B104K500CT
	C	2001,2002,2014,2015	0402N102J500CT
	C	2011,2240-2242,2244	CEVW100M16
	C	2012,2022,2243,2245	0402B104K160CT
	C	2020,2031,2032,2850	0402N102J500CT
	C	2026,2027	CEVW470M16
	C	2033,2034	0402N121J500CT
	C	2035,2036	0402N330J500CT
	C	2039,2041,2221,2222	0402N331J500CT
	C	2049	0603X475K100CT

Mark	No.	Description	Part No.
	C	2201,2205,2401,2405	0402B102K500CT
	C	2203,2204,2403,2404	0402N221J500CT
	C	2206,2402,2406,2603	0603B104K250CT
	C	2209,2210,2214,2215	0402N471J500CT
	C	2212,2229,2230,2238	0402N101J500CT
	C	2216 (100 uF/16 V)	CCH1565
	C	2217,2218,2415,2416	0402B223K500CT
	C	2223,2224,2421,2422 (0.012 uF)	ACE7125
	C	2225,2228,2423,2425 (3 300 pF)	DCG1049
	C	2231,2233,2429,2431	CEVW101M25
	C	2234,2236,2274,2430	0402B104K250CT
	C	2239,2275,2277,2407	0402N101J500CT
	C	2246 (22 uF)	DCH1256
	C	2247,2250,2438-2440	CEVW100M16
	C	2248,2249,2252,2441	0402B104K160CT
	C	2251,2253,2276,2435	0402B103K160CT
	C	2408,2411,2412,2427	0402N101J500CT
	C	2409,2410,2413,2414	0402N471J500CT
	C	2417,2418	CEVW101M16
	C	2419,2420	0402N331J500CT
	C	2428,2436,2437,2475	0402N101J500CT
	C	2433,2472,2474	0402B104K250CT
	C	2442,2445,2449,2630	CEVW100M16
	C	2443,2446,2448,2451	0402B104K160CT
	C	2447,2450,2473,2615	0402B103K160CT
	C	2476,2611-2614,2833	0402N101J500CT
	C	2481,2482	0603N102J500CT
	C	2602,2604,2845	0402B102K500CT
	C	2605	0603B104K250CT
	C	2607-2610	0402N221J500CT
	C	2616,2627,2677,2831	0402B103K160CT
	C	2618,2626	CEVW101M25
	C	2622-2625	0402B104K250CT
	C	2628,2629,2657,2659	0402N471J500CT
	C	2631,2634-2637,2640	CEVW100M16
	C	2638,2639,2642,2643	0402B104K160CT
	C	2641,2646,2647,2652	CEVW100M16
	C	2648-2651,2654,2655	0402B104K160CT
	C	2653	CEVW100M16
	C	2803,2805,2821,2830	0805X106K250CT
	C	2804	0402N100J500CT
	C	2806,2808-2816	0402B104K160CT
	C	2807,2817	0402N7R0C500CT
	C	2818-2820,2822,2824	0402B104K160CT
	C	2827,2828,2839,2841	0402B104K160CT
	C	2829	0603X105K250CT
	C	2832	0805X106K250CT
	C	2834	0402N101J500CT
	C	2840,2842,2844,2847	0402B103K160CT
	C	2843,2846,2849,2852	0402B104K160CT
	C	2848,2851,2854,2857	0402B103K160CT
	C	2853,2855,2856,2860	0402B104K160CT
	C	2859,2861,2864,2867	0402B103K160CT
	C	2862,2863,2865,2868	0402B104K160CT
	C	2869,2949	0402B103K160CT
	C	2870,2871,2948	0402B104K160CT
	C	2872	0402N471J500CT
	C	2943	0402N102J500CT

Mark	No.	Description	Part No.
		UCOM ASSY	
		Consit of	
		MCJK ASSY	
		AOUT ASSY	
		UCOM ASSY	
		B F G	
		UCOM ASSY	
		SEMICONDUCTORS	
	IC	4001	DYW2256
		*Part number of the initial firmware equipped	
	IC	4002	DYW2257
		*Part number of the initial firmware equipped	
	IC	4003	PST8430N
	IC	4201-4206,4503,4504	TC7SH08FUS2
⚠	IC	4301	MM1856A33N
⚠	IC	4501,4502	MM3542BF
	IC	4505	PCM1791ADBR@V
	IC	4506-4508,4517,4901	NJM4580MD
	IC	4509,4510,4518,4519	NJM4580DD
	IC	4511-4513,4515	TC7SH08FUS2
	IC	4514	CS4344-CZZ@V
⚠	IC	4516	NJM2872BF33
	IC	4902	NJM4580MD
	Q	4001	LTC043EEB
	Q	4201	LTA024EEB
	Q	4202,4204,4206	LSAR523UB
	Q	4203,4205,4207	LTC024EEB
	Q	4501	RN2903
	Q	4502-4511,4514-4529	INC2002AC1
	Q	4901-4904	2SK209
	D	4301-4306,4502	1SS355L@V
	D	4503	RB551VM-30
		MISCELLANEOUS	
	L	4301 POWER INDUCTOR	ATH7053
	L	4501,4502 INDUCTOR	CTH1253
	L	4901,4902 CHIP SOLID INDUCTOR	XTL3010
	JA	4501 RCA JACK	DKB1131
	JA	4502,4503 CANON CONNECTOR	DKB1093
	JA	4504,4505 6.5 DIA JACK	DKN1688
	JA	4901,4902 XLR SOCKET	DKB1124
	X	4001 CRYSTAL RESONATOR (16 MHz)	BSS1146
	CN	4201,4308 39P CONNECTOR	VKN2097
	CN	4202 35P CONNECTOR	VKN2025
	CN	4203,4204 FFC/FPC CONNECTOR	DKN1689
	CN	4205,4206 FFC/FPC CONNECTOR	DKN1690
	CN	4207,4208 CONNECTOR	CKS3851
	CN	4209,4210 6P CONNECTOR	VKN1237
	CN	4301,4302 FFC/FPC CONNECTOR	DKN1678
	CN	4303,4304 FFC/FPC CONNECTOR	DKP3953
	CN	4305-4307 L-PLUG(3P)	KM200NA3L
	CN	4501 19P CONNECTOR	VKN1250
	CN	4502 CONNECTOR	AKM1277
	CN	4503 22P CONNECTOR	VKN1253
	CN	4901 CONNECTOR	CKS3561
	CN	4902 10P CONNECTOR	VKN1241
		9001 CANON SHIELD	DNF1789
		9002,9003 PHONE SHIELD	DNF1875
		9004,9005 MIC SHIELD	DNF1849
	VA	4501-4513,4901-4906 VARISTORS	EZJZ1V270RM

Mark	No.	Description	Part No.
		RESISTORS	
	R	4017,4029,4045,4086	RAB4CQ223J
	R	4026,4030,4039,4046	RAB4CQ560J
	R	4049,4051-4054,4076	RAB4CQ560J
	R	4055	RAB4CQ103J
	R	4071-4074,4081	RAB4CQ101J
	R	4077,4079,4087-4093	RAB4CQ560J
	R	4101	RAB4CQ104J
	R	4222-4224,4232,4233	RS1/4SA2R2J
	R	4244-4251	RS1/4SA2R0J
	R	4262-4265	RS1/4SA2R2J
	R	4505,4506	RS1/16SS3902D
	R	4509,4511	RS1/16SS1802D
	R	4510,4512	RS1/16SS3301D
	R	4515,4676	RT0603DRD0747RL@V
	R	4531,4532,4541,4542	RS1/10SR513J
	R	4551-4558,4909-4914	RS1/10SR3301D
	R	4559-4566	RT0603DRD0712KL@V
	R	4567-4574	RS1/10SR2701D
	R	4575-4582	RS1/8SQ5600F
	R	4583-4586,4595-4598	RS1/10SR223J
	R	4587-4590	RS1/8SQ2700F
	R	4599-4606	RS1/10SR1800F
	R	4607,4608,4686,4687	RS1/10SR1802D
	R	4609,4610	RS1/10SR3902D
	R	4611-4618	RS1/10SR2001D
	R	4619,4620	RS1/10SR6800D
	R	4621-4628	RS1/10SR5101D
	R	4629,4630	RS1/10SR103J
	R	4631-4638	RS1/4SA471J
	R	4639,4640,4653-4656	RS1/10SR183J
	R	4641-4644,4716-4719	RS1/10SR2201D
	R	4657,4658	RS1/10SR470J
	R	4659-4662,4667-4670	RT0603DRD0733RL@V
	R	4663-4666,4724-4731	RS1/10SR183J
	R	4688,4689,4694,4695	RS1/10SR6801D
	R	4690,4691	RS1/10SR1201D
	R	4692,4693	RT0603DRD072KL@V
	R	4696-4703,4931,4932	RS1/10SR1801D
	R	4704-4711	RS1/10SR5601D
	R	4712-4715	DCN1200
	R	4732-4735	RS1/10SR680J
	R	4736-4739	RS1/10SR220J
	R	4901-4904	RT0603DRD07220RL@V
	R	4905-4908	RS1/10SR0R0J
	R	4915,4917,4920,4922	RT0603DRD071K5L@V
	R	4916,4918,4924,4926	RT0603DRD074K7L@V
	R	4919,4921	RS1/10SR8200D
	R	4927,4928	RS1/10SR3301D
	R	4933,4934	RS1/10SR1602D
		Other Resistors	RS1/16SS###J
		CAPACITORS	
	C	4001,4055,4211,4212	CEVW101M16
	C	4002,4020,4024,4027	0402B104K160CT
	C	4003-4015,4076,4077	0402N102J500CT
	C	4016-4019,4021-4023	0402N471J500CT
	C	4025,4028	0402N100J500CT
	C	4026,4029,4031	0402N471J500CT
	C	4030,4032,4056,4078	0402B104K160CT
	C	4033-4043,4046-4049	0402N471J500CT

Mark	No.	Description	Part No.
	C	4044	0402B473K250CT
	C	4045,4052-4054	0402N101J500CT
	C	4057-4075,4082	0402N471J500CT
	C	4079,4541,4542,4547	0402N102J500CT
	C	4080,4083,4209,4210	0402B104K160CT
	C	4084-4087,4917,4918	0402N471J500CT
	C	4088-4090,4231-4233	0402N101J500CT
	C	4201,4207,4215,4219	0402B104K500CT
	C	4213,4218,4224,4226	0402B104K160CT
	C	4223,4242,4315,4319	0402B104K500CT
	C	4225,4227,4229,4236	0402B102K500CT
	C	4228,4234,4235,4237	0402B104K160CT
	C	4238,4240,4519,4520	0402B102K500CT
	C	4239,4307-4309,4311	0402B104K160CT
	C	4243-4245,4546,4646	0402N101J500CT
	C	4310,4336,4346	0805X106K250CT
	C	4312,4313,4316,4318	CEVW101M16
	C	4314,4317,4337,4517	0402B104K160CT
	C	4344,4549,4642,4923	0402B103K500CT
	C	4345 (2.2 uF)	CCG1218
	C	4501,4503,4511,4618	0603N102J500CT
	C	4502,4506,4512	0603N101J500CT
	C	4505 (4 700 pF)	ACE7115
	C	4508,4644	CEVW101M16
	C	4510,4514 (220 uF/25 V)	DCH1369
	C	4515,4516 (10 uF)	DCH1263
	C	4518,4527,4528,4545	0402B104K160CT
	C	4523,4524,4532,4534	0402B104K500CT
	C	4525,4526	0402B153K160CT
	C	4529,4530	0402N561J500CT
	C	4537-4540,4686	0805X106K250CT
	C	4543,4544,4611,4631	0402B104K500CT
	C	4548 (0.1 uF)	ACE7100
	C	4550,4705,4709	0603X106M250CT
	C	4551,4696 (1 uF)	DCE1030
	C	4552,4589,4590 (220 uF/16 V)	CCH2090
	C	4557-4560	0603N331J500CT
	C	4561-4568,4593	0603N101J500CT
	C	4569,4577,4659,4660 (100 uF/25 V)	CCH2000
	C	4592,4594,4600,4605 (0.1 uF)	DCE1031
	C	4596-4599,4602,4603	0603N101J500CT
	C	4606	0603N101J500CT
	C	4607-4610 (220 uF/16 V)	CCH2090
	C	4612,4613,4620-4623 (1 000pF)	ACE7099
	C	4624,4626,4681,4902	0603B103K500CT
	C	4628-4630,4641,4645	0402N102J500CT
	C	4637,4688,4692,4695	0402B104K160CT
	C	4638	CEVW100M16
	C	4639,4643	0402B104K500CT
	C	4647,4648,4673-4676 (100 uF/16 V)	CCH1565
	C	4650,4652,4701	0402N101J500CT
	C	4653,4654,4901,4903	0603N102J500CT
	C	4655,4656	0603N221J500CT
	C	4661-4668 (100 pF)	DCG1062
	C	4677-4680 (1 000pF)	ACE7099
	C	4685	0603X475K100CT
	C	4687 (100 uF/35 V)	DCH1366
	C	4693	0402B103K250CT
	C	4694,4913-4916,4941	0402N102J500CT

Mark	No.	Description	Part No.
	C	4697 (47 uF/16 V)	CCH1961
	C	4698	0402B104K160CT
	C	4702,4703,4927,4929	0603B104K250CT
	C	4904	0603B103K500CT
	C	4905-4908	0603B222K500CT
	C	4909-4912	0402N221J500CT
	C	4919,4920,4928,4930	0402N821J500CT
	C	4924	0402B103K500CT
	C	4937,4938,4945,4946	0603B104K250CT
	C	4939,4942	CEVW101M25
	C	4944	0402N102J500CT
	C	4947,4948	0603N102J500CT
	C	4949,4950	0402N471J500CT

MXRA ASSY
Consit of
MTRM ASSY
HPJK ASSY
MXRB ASSY

C D O

MXRA ASSY

SEMICONDUCTORS

	IC	7001	TC74VHC164F
	IC	7002,7003	TC74HC4052AF
	IC	7004	NJM2903M
	Q	7001,7004,7007,7010	LTC124EUB
	Q	7002,7006,7009,7011	ISA1602AM1
	Q	7003,7005,7008,7019	LSCR523UB
	Q	7012,7014,7016,7017	LTC124EUB
	Q	7013,7015,7018	ISA1602AM1
	Q	7020	LSCR523UB
	Q	7021-7024	LTC124EUB
	Q	7029	RT1P431M
	Q	7601,7602	INC2002AC1
	D	7001,7006,7007	LTL17KSL5D-P
	D	7002,7004,7008,7013	LTW-1GHCW4-P(A)@V
	D	7003,7005,7009,7014	1SS355L@V
	D	7010-7012,7019	LTL17KSL5D-P
	D	7015,7017	LTW-1GHCW4-P(A)@V
	D	7016,7018,7020,7022	1SS355L@V
	D	7021	LTL17KTBP5D@V
	D	7023	LTL17KCGP4J
	D	7024,7026-7052	1SS355L@V
	D	7025	LTL17KGH5D-P
	D	7601-7604	DF2B18FU

MISCELLANEOUS

JA	7601	6.5 DIA JACK	DKN1688
JA	7602	STEREO MINI JACK	XKN3017
KN	7601	SCREW PLATE	VNE1948
S	7001-7006,7010-7013	TACT SWITCH	DSG1079
S	7007-7009,7014	SLIDE SWITCH	DSH1058
S	7015-7018	TACT SWITCH	DSG1079
S	7019	ROTARY ENCODER	DSX1137
S	7020	ROTARY ENCODER	DSX1136
S	7021	ROTARY SWITCH	DSG1144
CN	7001	39P CONNECTOR	VKN2097
CN	7002	19P CONNECTOR	VKN1250
CN	7501	PLUG	CKS3533
CN	7601	L-PLUG(6P)	KM200NA6L

Mark	No.	Description	Part No.
	VA	7602,7603 VARISTORS	EZJZ1V270RM
		RESISTORS	
NSP	R	7049,7111	RS1/4SA361J
	R	7067	RS1/4SA391J
	R	7069	RS1/4SA471J
	R	7607	RS1/4SA0R0J
	VR	7001-7003,7006,7009 ROTARY VR	DCS1104
	VR	7004,7005,7007,7008 ROTARY VR	DCS1078
	VR	7010,7013 ROTARY VR	DCS1126
	VR	7011,7012,7015-7017 ROTARY VR	DCS1078
	VR	7014 ROTARY VR	DCS1104
	VR	7501,7502 ROTARY VR	DCS1123
		Other Resistors	RS1/10SR###J
		CAPACITORS	
	C	7001,7002	0603N471J500CT
	C	7003,7005,7006,7008	0603B104K250CT
	C	7004	CEJQ101M16
	C	7009,7023,7025	0603B104K250CT
	C	7010,7011	0603X106M160CT
	C	7015-7022,7030-7036	0603B471K500CT
	C	7024,7026,7028,7029	0603B102K500CT
	C	7037-7054,7057-7059	0603B104K250CT
	C	7501,7504	CEJQNP100M35
	C	7601-7604 (220 uF/6.3 V)	DCH1344
	C	7607,7608,7614,7616	0603B223K500CT
	C	7611,7612	0603B103K500CT

PADA ASSY
Consit of
USBA ASSY
CRFD ASSY
PAD1 ASSY
PAD2 ASSY
LVMB ASSY
JOGT1 ASSY
JOGT2 ASSY
MLCD ASSY
BENC ASSY
SUBP ASSY

E L M N U V AA AB AC

PADA ASSY

SEMICONDUCTORS

NSP	IC	3201,3301	PIC10F206-I/OT
	IC	3401	74VHC164FT
	IC	3402,5401,5402,5701	74VHC595FT
	IC	5101	TSC2007IPWR@V
	IC	5102	DS90LV804TSQ/N@V
	IC	5702	74VHC595FT
	Q	3401,3403,3409	RT3N22M
	Q	3402,3404,3406,3408	2SA1577
	Q	3405,3407,5417,5419	LTC124EUB
	Q	3410	2SA1577
	Q	3411-3417,5423-5428	LSCR523UB
	Q	3601-3603,5106	LTC024EEB
	Q	3604-3606	RSQ035P03
	Q	3701-3703,5101-5105	LTC023JEB
	Q	5107	LTA023JEB
	Q	5108	LTC023JEB
	Q	5401-5408,5429-5434	LTC123JUB
	Q	5418,5420,5422,5718	2SB1689
	Q	5421,5717,5719,5721	LTC124EUB
	Q	5435-5440,5723-5728	LSCR523UB
	Q	5441-5446,5701-5708	LTC123JUB
	Q	5720,5722	2SB1689
	Q	5729-5734,5741-5746	LTC123JUB
	Q	5735-5740	LSCR523UB
	D	3201,3301	DAN217UM
	D	3202,3302	RB520G-30
	D	3401,3407,3417,3419	1SS355L@V
	D	3402-3406,3410-3414	FC-1608UGK-520D
	D	3408,3409,3415,3416	SML-D12Y8W
	D	3418,3424,3436,3438	SML-D12Y8W
	D	3420,3422,3423,3425	SML-D12V8W
	D	3421,3426-3429,3435	1SS355L@V
	D	3430-3434	FC-1608UGK-520D
	D	3437,3440,3444	SML-D12V8W
	D	3439,3441-3443	SML-D12Y8W
	D	3445-3468,3601-3603	1SS355L@V
	D	3701-3704,5101,5102	NHSW146A-A21460
	D	5103-5110	FC-F1608BAK5
	D	5111,5112	NHSW146A-A21460
	D	5401-5412,5701-5712	NSSM124F-A21107
	D	5421-5460,5721-5760	1SS355L@V
	D	6001,6002,6004,6005	DF2B5M4CT@V

MISCELLANEOUS

	L	3201,3202,3204,3301 INDUCTOR	CTF1786
	L	3302,3304 INDUCTOR	CTF1786
	L	5001-5003 CHIP BEEDS FILTER	BTX1042
	JA	6001,6002 USB JACK	DKB1118
	KN	3201,3301 WRAPPING TERMINAL	CKF1089
	S	3701-3706,5101-5106 PUSH SWITCH	CSG1155
	S	3707 ENCODER SW	DSX1080
	S	5601-5604,5901-5904 PUSH SWITCH	CSG1155
	CN	3202,3302 CONNECTOR	AKM1290
	CN	3203,3303 CONNECTOR	CKS3851
	CN	3401 CONNECTOR	CKS5854
	CN	3601 6P-VH CONNECTOR	B6P-VH
	CN	3602 12PIN CONNECTOR	S12B-PASK-2@V
NSP	CN	3701,5003 CONNECTOR	CKS3850
	CN	5001 FFC/FPC CONNECTOR	CKS6646
	CN	5002 FFC/FPC CONNECTOR	CKS6645
	CN	5101 FFC/FPC CONNECTOR	CKS6625
	CN	5601,5901 FFC/FPC CONNECTOR	DKP3953
	CN	6001,6002 CONNECTOR	AKM1276
	CN	6051 CONNECTOR	AKM1289
NSP		1001,1002 JOG TOUCH UCOM	DVJ1015
⚠	P	3601-3603 PROTECTOR (3.000 A)	DEK1103
⚠	P	3604 PROTECTOR (3.000 A)	DEK1128
	VA	3201,3202,3301 SMD VARISTOR	EZJZ1V80010
	VA	3302,6001-6003 SMD VARISTOR	EZJZ1V80010
	VA	6005-6007 SMD VARISTOR	EZJZ1V80010

RESISTORS

	R	3201,3202,3301,3302 (750 ohm)	DCN1187
	R	3203,3303	RS1/16SS2202D
	R	3210,3310,5514-5517	RS1/10SR0R0J
	R	3401,3412,3423,3430	RS1/10SR431J
	R	3404,3410,3415,3421	RS1/10SR621J

Mark	No.	Description	Part No.
	R	3405,3411,3422,3427	RS1/4SA271J
	R	3406,3408,3416-3420	RS1/10SR152J
NSP	R	3409,3428,3434,3437	RS1/4SA361J
	R	3426,3439,3440,3444	RS1/10SR621J
	R	3429,3433,3435,3436	RS1/4SA271J
NSP	R	3438,3451,3459,3474	RS1/4SA361J
	R	3441	RS1/10SR431J
	R	3445-3449,3480,3482	RS1/10SR152J
	R	3450,3467,3472,3495	RS1/10SR621J
	R	3468-3471	RAB4CQ101J
	R	3475,3477,3491,3496	RS1/4SA271J
NSP	R	3476,3478,3494,3497	RS1/4SA361J
	R	3484	RS1/10SR152J
	R	3498	RS1/4SA271J
NSP	R	3499	RS1/4SA361J
	R	5102,5105,5145,5150	RS1/10SR162J
	R	5103,5106,5146,5153	RS1/10SR182J
	R	5108,5111,5122,5125	RS1/10SR821J
	R	5109,5112,5123,5127	RS1/10SR122J
	R	5114,5116,5118,5119	RS1/10SR911J
	R	5134,5140	RS1/10SR821J
	R	5135,5142	RS1/10SR122J
	R	5421-5424,5452-5455	RS1/8SQ511J
	R	5425-5428,5456-5459	RS1/8SQ561J
	R	5429-5432,5460-5463	RS1/10SR361J
	R	5433-5436,5464-5467	RS1/10SR391J
	R	5438-5441,5444-5447	RS1/8SQ301J
	R	5469-5472,5475-5478	RS1/8SQ301J
	R	5479-5482,5779-5782	RS1/10SR511J
	R	5483-5486,5783-5786	RS1/10SR681J
	R	5491-5494,5791-5794	RS1/10SR621J
	R	5496-5499,5796-5799	RS1/10SR102J
	R	5502-5505,5802-5805	RS1/10SR202J
	R	5506,5510,5518,5525	RAB4CQ222J
	R	5507,5511,5519,5522	RS1/10SR622J
	R	5508,5512,5520,5523	RS1/10SR822J
	R	5509,5513,5521,5524	RS1/10SR682J
	R	5526-5530,5815,5816	RS1/10SR0R0J
	R	5721-5724,5752-5755	RS1/8SQ511J
	R	5725-5728,5756-5759	RS1/8SQ561J
	R	5729-5732,5760-5763	RS1/10SR361J
	R	5733-5736,5764-5767	RS1/10SR391J
	R	5738-5741,5744-5747	RS1/8SQ301J
	R	5769-5772,5775-5778	RS1/8SQ301J
	R	5806,5807,5814,5817	RAB4CQ222J
	R	5808,5809,5812,5820	RS1/10SR822J
	R	5810,5813,5822,5825	RS1/10SR682J
	R	5811,5823	RS1/10SR622J
	R	5818,5819,5826-5830	RS1/10SR0R0J
	R	5821,5824	RS1/10SR822J
	R	6051	RS1/10SR0R0J
	VR	6051 VARIABLE RESISTOR	CCW1024
	Other Resistors		RS1/16SS###J

CAPACITORS

	C	3201,3301,3406-3408	0402N221J500CT
	C	3202,3302,3403,3404	0402B104K160CT
	C	3205,3305 (10 uF)	CCG1234
	C	3402,3409,6051	0402N471J500CT
	C	3405,3602,3617-3620	0402N102J500CT
	C	3601,3613-3616	0402N101J500CT
	C	3603	DCE1062
	C	3604,3610-3612	0603B104K250CT
	C	3605,3606	CEHVAW471M16
	C	3607-3609,5014,5401	0402B103K500CT
	C	3621-3624,5021,5024	0603B104K250CT
	C	3625-3628 (10 uF)	DCH1263
	C	3629	CCH1680
	C	3631	CEHVAW221M35
	C	3701,3703,5008,5010	0402N102J500CT
	C	3702,5009,5011,5013	0402B104K160CT
	C	5012,5603,5903	0805X106K250CT
	C	5015	0805X226M160CT
	C	5016-5020,5022,5110	0603X105K250CT
	C	5023,5025,5112	0402B102K500CT
	C	5030-5033,5102,6003	0402N102J500CT
	C	5101,5104,5620,5920	0402B104K160CT
	C	5111	0603B104K250CT
	C	5113	0603X225K160CT
	C	5114	0603X105K250CT
	C	5402,5610-5615,5618	0402B103K500CT
	C	5403-5410,5703-5710	0402N101J500CT
	C	5617,5917,6007,6008	CEVW101M16
	C	5619,5701,5702	0402B103K500CT
	C	5910-5915,5918,5919	0402B103K500CT
	C	6002,6005	0402B103K160CT
	C	6006	0402N102J500CT
	C	6052	0402B104K160CT

PNL1 ASSY
Consit of
PLAY1 ASSY
CHF1 ASSY
CHF2 ASSY
DCK1 ASSY
TMP1 ASSY

H J K Q S

PNL1 ASSY

SEMICONDUCTORS

	IC	8201	TC74VHC164F
	Q	8001-8003,8105,8106	LTC124EUB
	Q	8103,8108	LTC123JUB
	Q	8107,8110,8112,8115	2SAR502UB
	Q	8109,8111,8113,8117	LTC124EUB
	Q	8114,8116	HN1A01FUS1
	Q	8118	2SAR502UB
	Q	8119,8120,8401,8402	LSCR523UB
	D	8001-8022	1SS355L@V
	D	8101,8104,8105,8111	LTL17KSL5D-P
	D	8102,8103,8106-8108	LTL17KRH5D-P
	D	8109	LTL17KTBP5D@V
	D	8110	LTW-1GHCW4-P(A)@V
	D	8112	LTL17KRH5D-P
	D	8401	LTL17KCGP4J
	D	8402	LTL17KSL5D-P

MISCELLANEOUS

	KN	8001,8301 EARTH TERMINAL	AKF7002
	S	8001,8003-8006 TACT SWITCH	DSG1089

Mark	No.	Description	Part No.
	S	8002,8007,8008,8014 TACT SWITCH	DSG1079
	S	8009-8012,8015-8022 TACT SWITCH	DSG1089
	S	8013 SLIDE SWITCH	DSH1058
	S	8201 PUSH SW	ASG1102
	S	8401,8402 TACTILE SWITCH	DSG1153
	CN	8201 39P CONNECTOR	VKN2097
	CN	8202,8301,8401 6P CONNECTOR	VKN1237
	CN	8501,8601 L-PLUG(3P)	KM200NA3L
	VA	8302,8303 VARISTORS	EZJZ1V270RM

RESISTORS

	R	8002,8005,8143,8144	RS1/4SA0R0J
	R	8146,8149	RS1/4SA0R0J
	VR	8001,8002 ROTARY VR	DCS1078
	VR	8301 SLIDE VR	DCV1033
	VR	8501,8601 SLIDE VR	DCV1027
		Other Resistors	RS1/10SR###J

CAPACITORS

	C	8001,8002,8210,8211	0603N471J500CT
	C	8003,8004,8203-8205	0603B104K250CT
	C	8206	0603X105K250CT
	C	8207,8208	CEJQ101M16
	C	8212,8214,8301,8304	0603B104K250CT
	C	8303	0603X106K100CT
	C	8401	0603X106M160CT
	C	8402	0603B104K250CT

PNL2 ASSY
Consit of
PLAY2 ASSY
DCK2 ASSY
TMP2 ASSY
JOG1 ASSY
JOG2 ASSY

I R T W X

PNL2 ASSY

SEMICONDUCTORS

	IC	9001	TC74VHC164F
	Q	9001-9003,9008,9009	LTC124EUB
	Q	9006,9010	LTC123JUB
	Q	9011,9013,9015,9018	2SAR502UB
	Q	9012,9014,9016,9020	LTC124EUB
	Q	9017,9019	HN1A01FUS1
	Q	9021	2SAR502UB
	Q	9022-9024,9701,9702	LSCR523UB
	D	9001-9024	1SS355L@V
	D	9025,9026,9031,9037	LTL17KSL5D-P
	D	9027-9030,9032-9034	LTL17KRH5D-P
	D	9035	LTL17KTBP5D@V
	D	9036	LTW-1GHCW4-P(A)@V
	D	9038	LTL17KRH5D-P
	D	9701	LTL17KSL5D-P
	D	9702	LTL17KCGP4J

MISCELLANEOUS

	L	9001 CHIP SOLID INDUCTOR	XTL3010
	KN	9601 EARTH TERMINAL	AKF7002
	S	9001,9002,9004-9006 TACT SWITCH	DSG1089
	S	9003,9007,9009,9014 TACT SWITCH	DSG1079
	S	9008,9010-9013 TACT SWITCH	DSG1089
	S	9015-9025 TACT SWITCH	DSG1089
	S	9701,9702 TACTILE SWITCH	DSG1153
	CN	9001 FFC/FPC CONNECTOR	DKN1692
	CN	9003,9601,9701 6P CONNECTOR	VKN1237
	CN	9401,9501 PLUG(4P)	KM200NA4
	PC	9401,9501 PHOTO INTERRUPTER	KE-2N18-15
	VA	9602,9603 VARISTORS	EZJZ1V270RM

RESISTORS

	R	9068-9071	RS1/4SA0R0J
	VR	9601 SLIDE VR	DCV1033
		Other Resistors	RS1/10SR###J

CAPACITORS

	C	9001,9006,9007,9012	0603B104K250CT
	C	9003,9401,9501	0603X105K250CT
	C	9008,9009	CEJQ101M16
	C	9010,9011	0603N471J500CT
	C	9014,9601,9604,9702	0603B104K250CT
	C	9015-9020	0603B102K500CT
	C	9402,9502	0603B103K500CT
	C	9603	0603X106K100CT
	C	9701	0603X106M160CT

JLCD ASSY
Consit of
JLCD1 ASSY
JLCD2 ASSY

Y Z

JLCD ASSY

SEMICONDUCTORS

⚠	IC	3001,9801	BD00IC0WEFJ
NSP	IC	3002,9802	R5S72690W266FP
	IC	3003,9803	DYW2258
		*Part number of the initial firmware equipped	
	IC	3005,9805	W9864G6KH-5
	Q	3001,3002,9801,9804	LTC024EEB
	Q	3003,9805	ISA1602AM1
	Q	3006,3007,9806,9807	HN1C01FUS1
	Q	3009,3010,9808,9809	2SB1188
	Q	3011,9802	LSAR523UB
	Q	3012,9803	LTC124EUB

MISCELLANEOUS

	L	3001-3004,3008-3024 CHIP BEADS	VTL1126
	L	3005-3007,9805-9807 INDUCTOR	CTF1545
	L	3025,9825 CHIP BEADS	VTL1129
	L	3026,9826 CHIP INDUCTOR (10 uH)	DTL1105
	L	9801-9804,9808-9824 CHIP BEADS	VTL1126
	X	3001,9801 CRYSTAL RESONATOR (13.3333 MHz)	CSS1840
	CN	3002,9802 FFC/FPC CONNECTOR	DKN1676
	CN	3003,9803 FFC/FPC CONNECTOR	DKN1675
	CN	3004,9804 FFC/FPC CONNECTOR	DKN1677

RESISTORS

	R	3002,9802	RS1/10SR9101D
	R	3003,9803	RS1/10SR1602D
	R	3005,3007,3008,3010	RAB4CQ121J
	R	3009,3028,3030,3036	RAB4CQ102J
	R	3020,3027,3034,3035	RAB4CQ560J
	R	3048,9852	RS1/16SS5601F
	R	3052,9856	RAB4CQ472J
	R	3056,9860	RS1/16SS2402F
	R	3062,9866	RAB4CQ103J

Mark	No.	Description	Part No.
	R	3082,9889	RAB4CQ222J
	R	3083,9890	RS1/10SR104J
	R	3084,9891	RS1/10SR332J
	R	3088,9892	RAB4CQ473J
	R	3092,9893	RS1/10SR5600D
	R	3093,9894	RS1/10SR4300D
	R	3094,9895	RS1/16SS1201D
	R	3095,9896	RS1/16SS6800D
	R	3096,9897	RS1/16SS2401D
	R	3097,9898	RS1/16SS1801D
	R	3099,9900	RS1/16SS5101D
	R	3100,9901	RS1/16SS4701D
	R	3101,9902	RS1/16SS9101D
	R	3102,9903	RS1/16SS8201D
	R	9805,9809,9810,9812	RAB4CQ121J
	R	9811,9832,9834,9840	RAB4CQ102J
	R	9824,9831,9838,9839	RAB4CQ560J
	Other Resistors		RS1/16SS###J

CAPACITORS

	C	3002,3111,9802,9917	0603B104K250CT
	C	3003,3004,3008,3016	0805X106K250CT
	C	3005,3017-3025,3030	0402B104K160CT
	C	3006,3026,9806,9830	0402N471J500CT
	C	3015,9816	0402N470J500CT
	C	3027,3091,3112,3118	0402N102J500CT
	C	3029,3031,3052,3053	0402N101J500CT
	C	3034,3035,3037-3040	0402B104K160CT
	C	3050,3051,3054-3057	0402B104K160CT
	C	3063-3066,3068-3075	0402B104K160CT
	C	3077-3086,3088,3090	0402B104K160CT
	C	3087,3092,3100-3104	0402B103K160CT
	C	3089,3126,9831,9832	0402N101J500CT
	C	3093,3097,3110,3117	0402B104K160CT
	C	3094,3098,3109,3116	0805X106K250CT
	C	3095,3096,9898,9899	0402N120J500CT
	C	3106,3107,9890,9895	0402B103K160CT
	C	3108,3119,9912,9913	0805X226M160CT
	C	3125,9829,9894,9918	0402N102J500CT
	C	9803,9804,9808,9818	0805X106K250CT
	C	9805,9820-9828,9833	0402B104K160CT
	C	9834,9855,9856,9892	0402N101J500CT
	C	9837,9838,9840-9843	0402B104K160CT
	C	9853,9854,9857-9860	0402B104K160CT
	C	9866-9869,9871-9878	0402B104K160CT
	C	9880-9889,9891,9893	0402B104K160CT
	C	9896,9900,9916,9924	0402B104K160CT
	C	9897,9901,9914,9923	0805X106K250CT
	C	9903-9907,9909,9910	0402B103K160CT
	C	9920,9925	0402N102J500CT

AD

SW POWER SUPPLY

There is no service parts.