9. EXPLODED VIEWS AND PARTS LIST

NOTES:
- *Parts marked by "NSP" are generally unavailable because they are not in our Master Spare Parts List.*
- *The ⚠ mark found on some component parts indicates the importance of the safety factor of the part. Therefore, when replacing, be sure to use parts of identical designation.*
- *Screws adjacent to ▼ mark on product are used for disassembly.*
- *For the applying amount of lubricants or glue, follow the instructions in this manual. (In the case of no amount instructions, apply as you think it appropriate.)*

9.1 PACKING SECTION

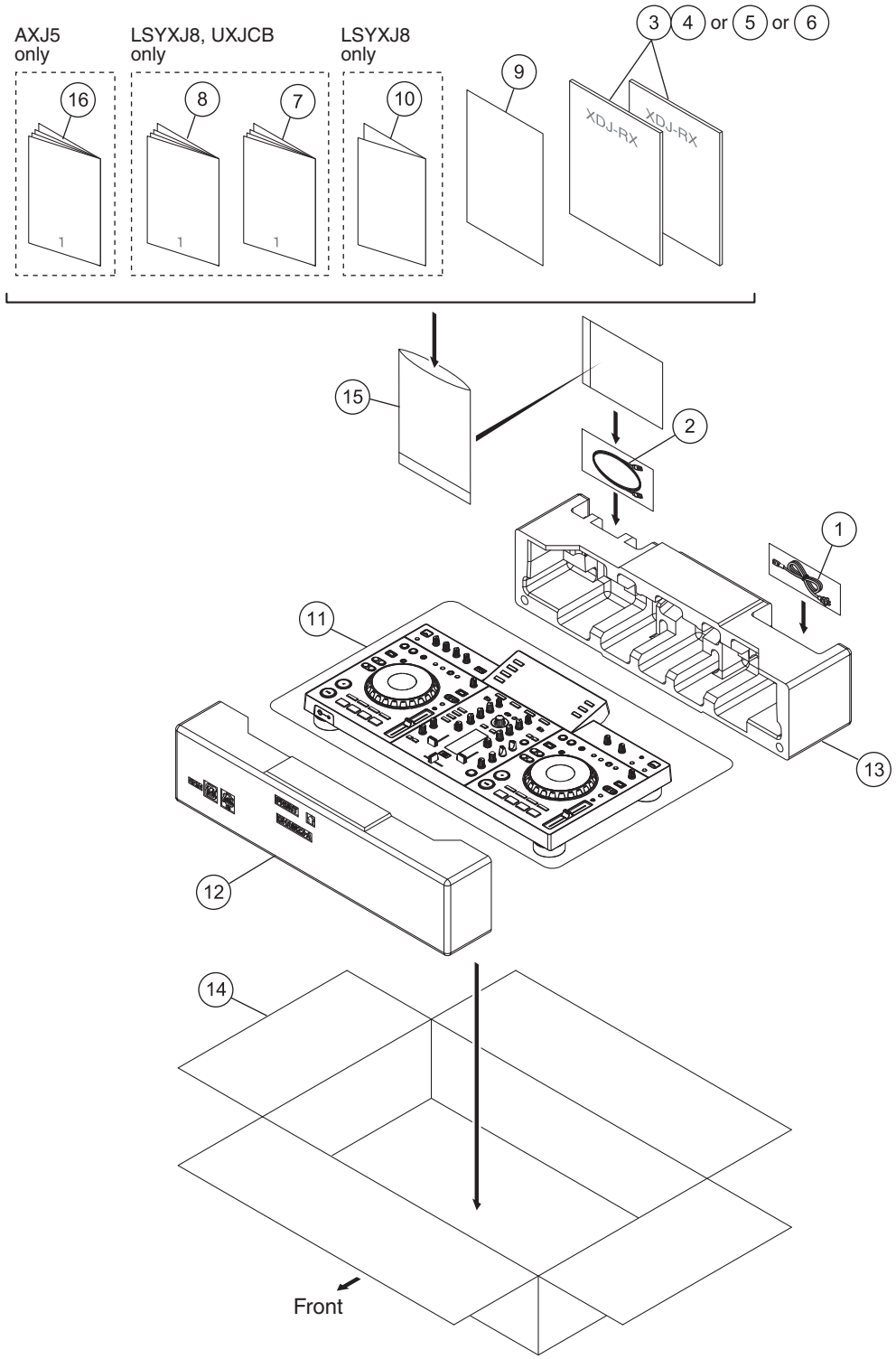

(1) PACKING SECTION PARTS LIST

Mark	No.	Description	Part No.
⚠	1	Power Cord	See Contrast table (2)
	2	LAN Cable	DDE1141
	3	Operating Instructions (Quick Start Guide)	See Contrast table (2)
	4	Operating Instructions (Quick Start Guide)	See Contrast table (2)
	5	Operating Instructions (Quick Start Guide)	See Contrast table (2)
	6	Operating Instructions (Quick Start Guide)	See Contrast table (2)
	7	Sub Manual/LI1	See Contrast table (2)
	8	Sub Manual/LI2	See Contrast table (2)
	9	Software Information	DRH1305
NSP	10	Warranty	See Contrast table (2)
	11	Mirror Mat (1200*1000)	DHL1169
	12	Pad	DHA1922
	13	Pad	DHA1923
	14	Packing Case	See Contrast table (2)
NSP	15	Polyethylene Bag	AHG7117
	16	Sub Manual/LIC	See Contrast table (2)

(2) CONTRAST TABLE

XDJ-RX/LSYXJ8, UXJCB and AXJ5 are constructed the same except for the following:

Mark	No.	Symbol and Description	XDJ-RX/LSYXJ8	XDJ-RX/UXJCB	XDJ-RX/AXJ5
⚠	1	Power Cord	ADG1244	DDG1108	DDG1114
	3	Operating Instructions (Quick Start Guide)(En, Fr, De, It)	DRH1293	Not used	Not used
	4	Operating Instructions (Quick Start Guide)(Nl, Es, Pt, Rs)	DRH1294	Not used	Not used
	5	Operating Instructions (Quick Start Guide)(En)	Not used	DRH1292	Not used
	6	Operating Instructions (Quick Start Guide)(Zhcn)	Not used	Not used	DRH1296
	7	Sub Manual/LI1	DRH1285	DRH1285	Not used
	8	Sub Manual/LI2	DRH1286	DRH1285	Not used
NSP	10	Warranty	ARY7158	Not used	Not used
	14	Packing Case	DHG3382	DHG3391	DHG3393
	16	Sub Manual/LIC	Not used	Not used	DRH1299

9.2 BOTTOM SECTION

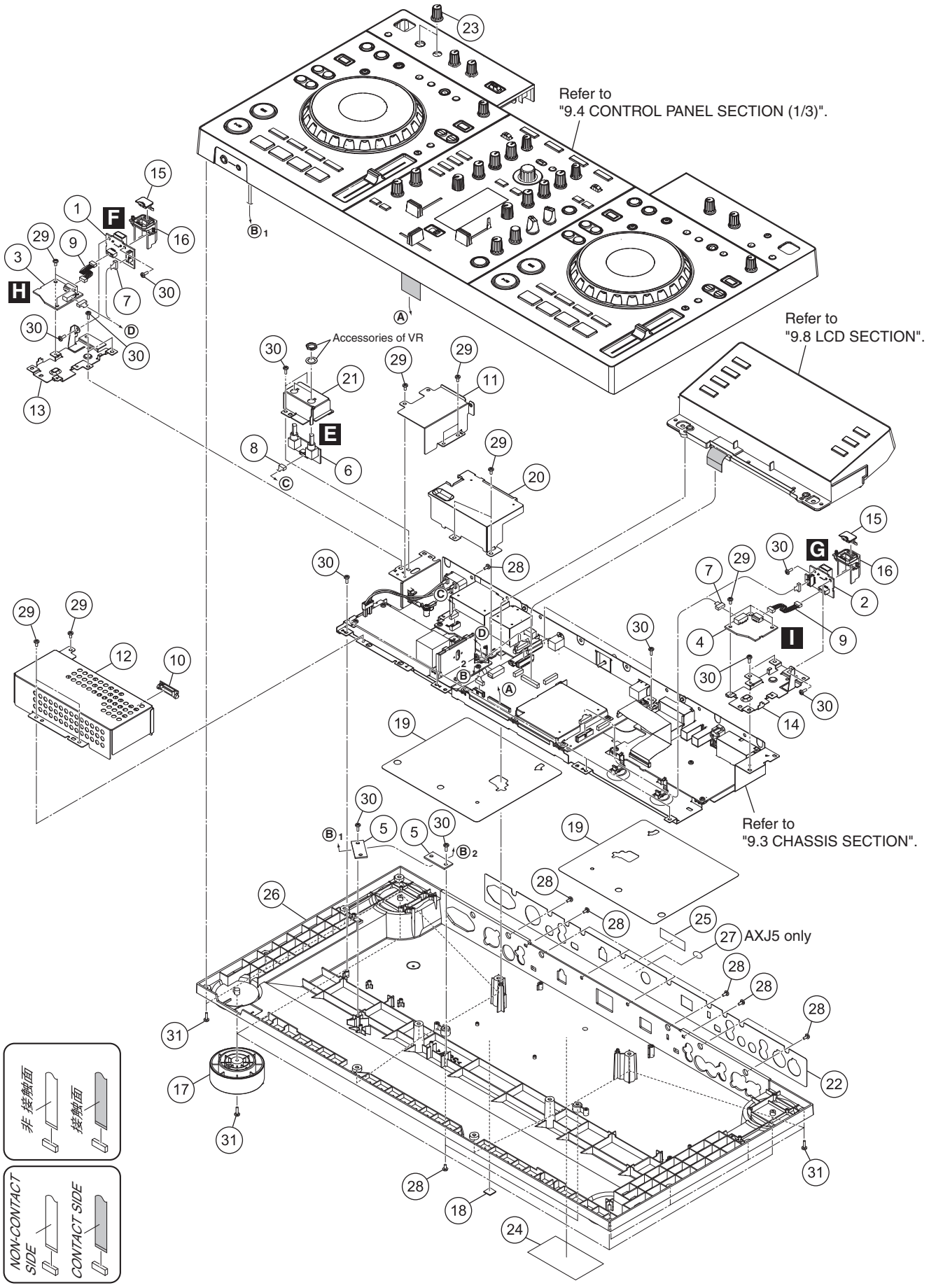

(1) BOTTOM SECTION PARTS LIST

Mark	No.	Description	Part No.
	1	USB1 Assy	DWX3620
	2	USB2 Assy	DWX3621
	3	USBP1 Assy	DWX3636
	4	USBP2 Assy	DWX3637
	5	HLD3 Assy	DWX3647
	6	MICT Assy	DWX3623
	7	Shielded Conn-Cable	DDA1050
	8	Shielded Conn-Cable	DDA1051
	9	Connector Assy	PF04PP-C05
	10	Guard/EDG	DEC3580
	11	Shield Case/AC	DNH3184
	12	Shield Case	DNH3202
	13	Stay/US1	DNH3192
	14	Stay/US2	DNH3194
	15	Cover/USB	DNK6041
	16	Holder/USB	DNK6390
	17	Insulator Assy	DXB2131
	18	Rubber Foot	VEB1349
	19	Shield Plate	DNH3204
	20	Shield Case	DNH3203
	21	Stay	DNH3205
	22	Rear Panel	See Contast table (2)
	23	Knob/LBK	DAA1284
NSP	24	Label/SY	DRW2637
NSP	25	Serial Label (UPC)	DRW2311
	26	Chassis	DNK6387
NSP	27	CCC S&E Label	See Contast table (2)
	28	Screw	BBZ30P060FTB
	29	Screw	BBZ30P060FTC
	30	Screw	BPZ30P080FNI
	31	Screw	BPZ30P100FTB

(2) CONTRAST TABLE

XDJ-RX/LSYXJ8, UXJCB and AXJ5 are constructed the same except for the following:

Mark	No.	Symbol and Description	XDJ-RX/LSYXJ8	XDJ-RX/UXJCB	XDJ-RX/AXJ5
	22	Rear Panel	DAH3030	DAH3030	DAH3027
NSP	27	CCC S&E Label	Not used	Not used	DRW2310

9.3 CHASSIS SECTION

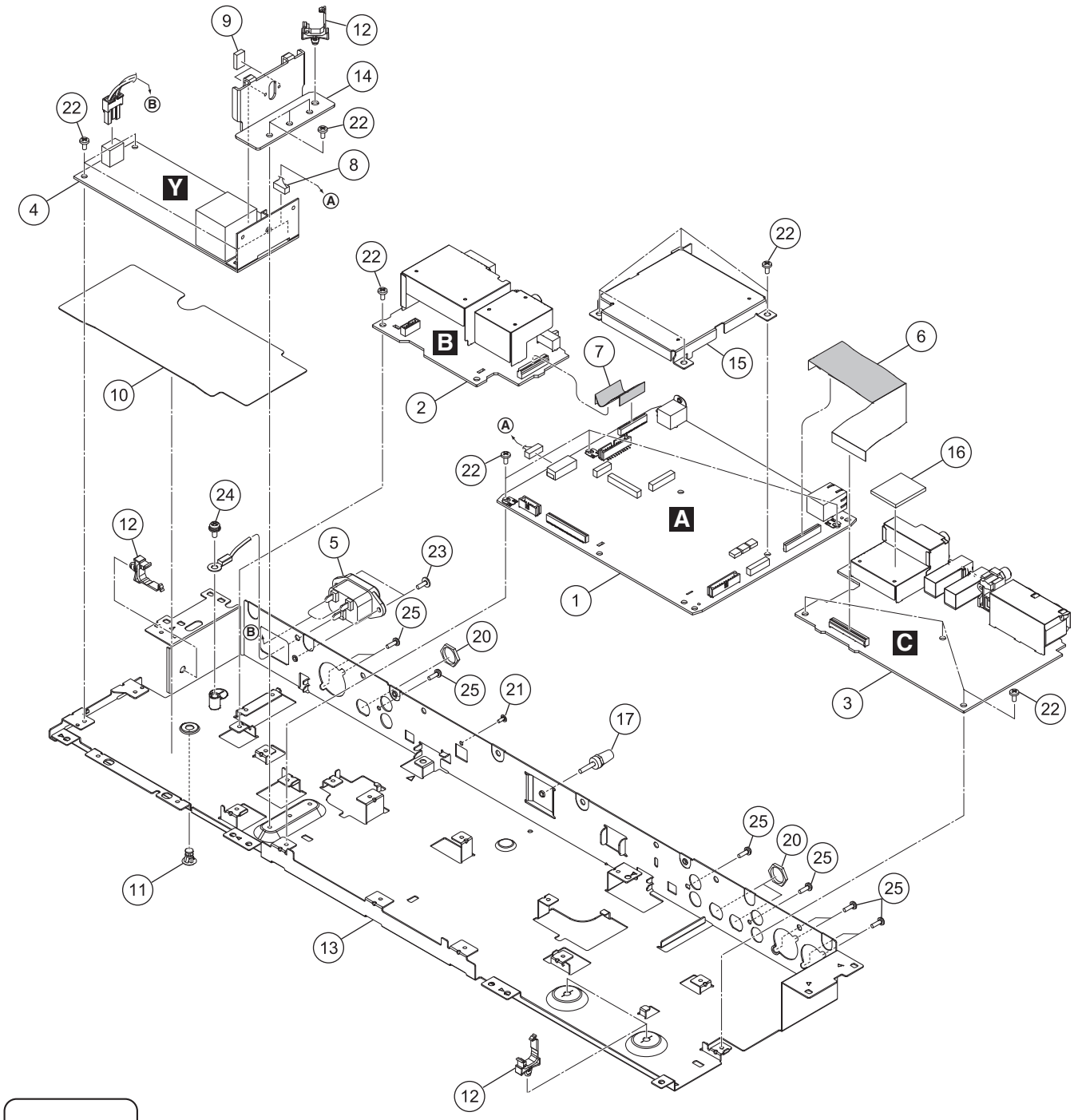

CHASSIS SECTION PARTS LIST

Mark	No.	Description	Part No.
	1	MAIN Assy	DWX3590
	2	JACK1 Assy	DWX3615
	3	JACK2 Assy	DWX3616
⚠	4	POWER SUPPLY Assy	DWR1463
⚠	5	AC Inlet/3P	DKP3961
	6	FFC/31P	DDD1685
	7	FFC	DDD1694
	8	Crimp Connector/6P	DKP3963
	9	Heat Cond Sheet	DEB2001
	10	Sheet	DEC3591
	11	Spacer/PCB	DEC3574
	12	Cord Clamper	DEC3579
	13	Stay/PCB	DNH3183
	14	Heat Sink/AL	DNH3195
	15	Shield Case/MAI	DNH3181
	16	Cushion	DEC3592
	17	Terminal Screw	AKE-031
	18	•••••	
	19	•••••	
	20	Nut (M12)	NKX2FNI
	21	Screw (M3*5)	DBA1340
	22	Screw	BBZ30P060FTC
	23	Screw	IBZ30P080FTB
	24	Screw	PMH40P080FTC
	25	Screw	PPZ30P080FTB

9.4 CONTROL PANEL SECTION (1/3)

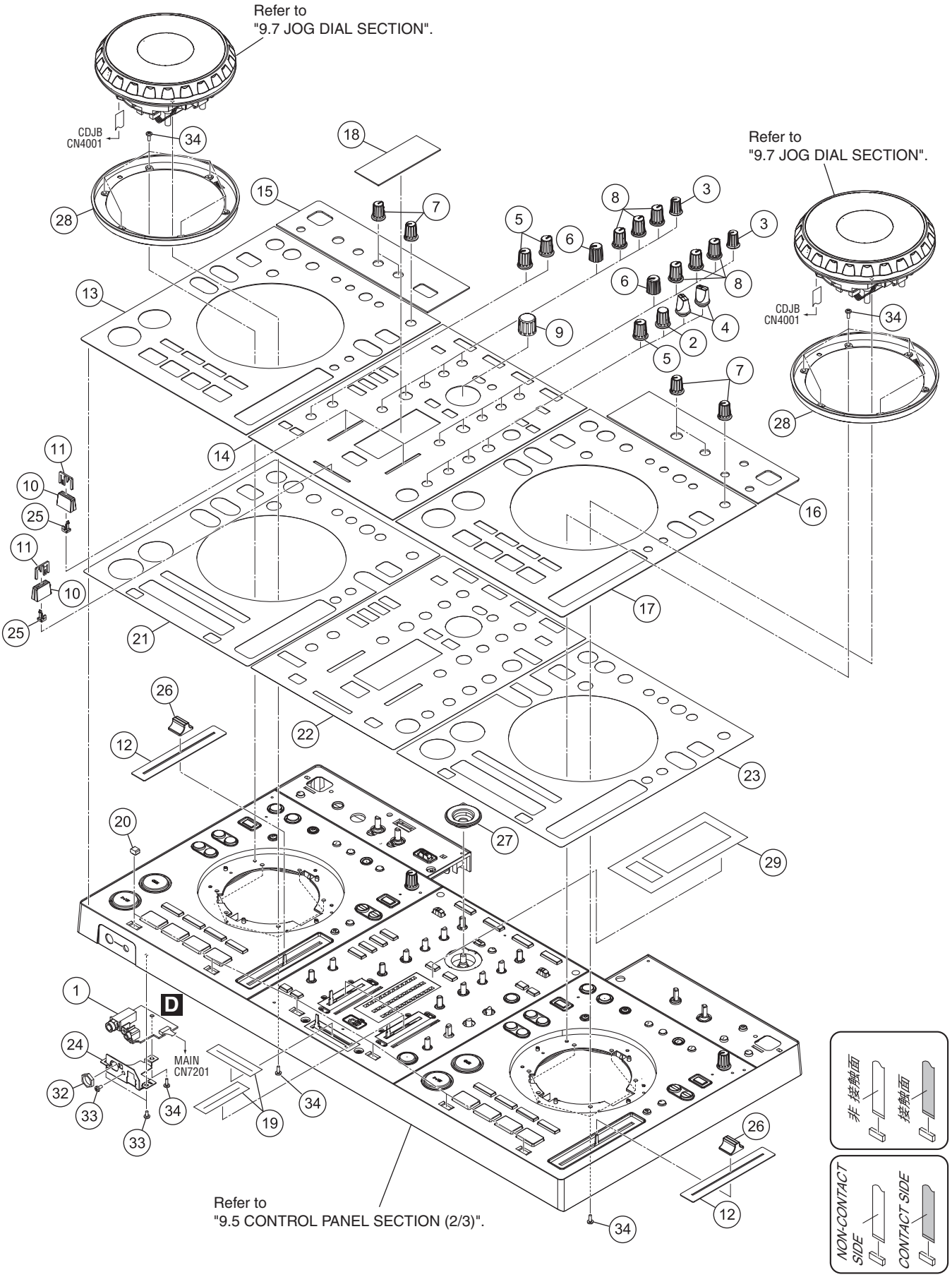

CONTROL PANEL SECTION (1/3) SECTION PARTS LIST

Mark	No.	Description	Part No.
	1	HPJB Assy	DWX3633
	2	Rotary SW Knob (C)	DAA1180
	3	Rotary SW Knob S (C)	DAA1204
	4	FX SEL Knob	DAA1213
	5	Rotary Knob (BN)	DAA1220
	6	Knob/CL	DAA1320
	7	Knob/LBK	DAA1284
	8	Knob/RSW	DAA1305
	9	Knob/BRS	DAA1342
	10	Slider Knob 1	DAC2684
	11	Slider Knob 2	DAC2685
	12	Slide Sheet 1C	DAH2404
	13	Plate/DC1	DAH3009
	14	Plate/MIX	DAH3010
	15	Panel/PM1	DAH3011
	16	Panel/PM2	DAH3012
	17	Plate/DC2	DAH3014
	18	Panel/LVL	DAH3016
	19	Fader Packing	DEC3355
	20	Gasket/JOG	DEC3562
	21	DS Tape/DC1	DEH1061
	22	DS Tape/MIX	DEH1062
	23	DS Tape/DC2	DEH1063
	24	Stay/HP	DNH3182
	25	Slider Knob Stopper	DNK5888
	26	Knob/SLD	DNK5981
	27	Ring/BRS	DNK6312
	28	Ring/JOG	DNK6396
	29	DS Tape	DEH1066
	30	•••••	
	31	•••••	
	32	Nut M12	DBN1018
	33	Screw	BBZ30P060FTC
	34	Screw	BPZ30P080FNI

9.5 CONTROL PANEL SECTION (2/3)

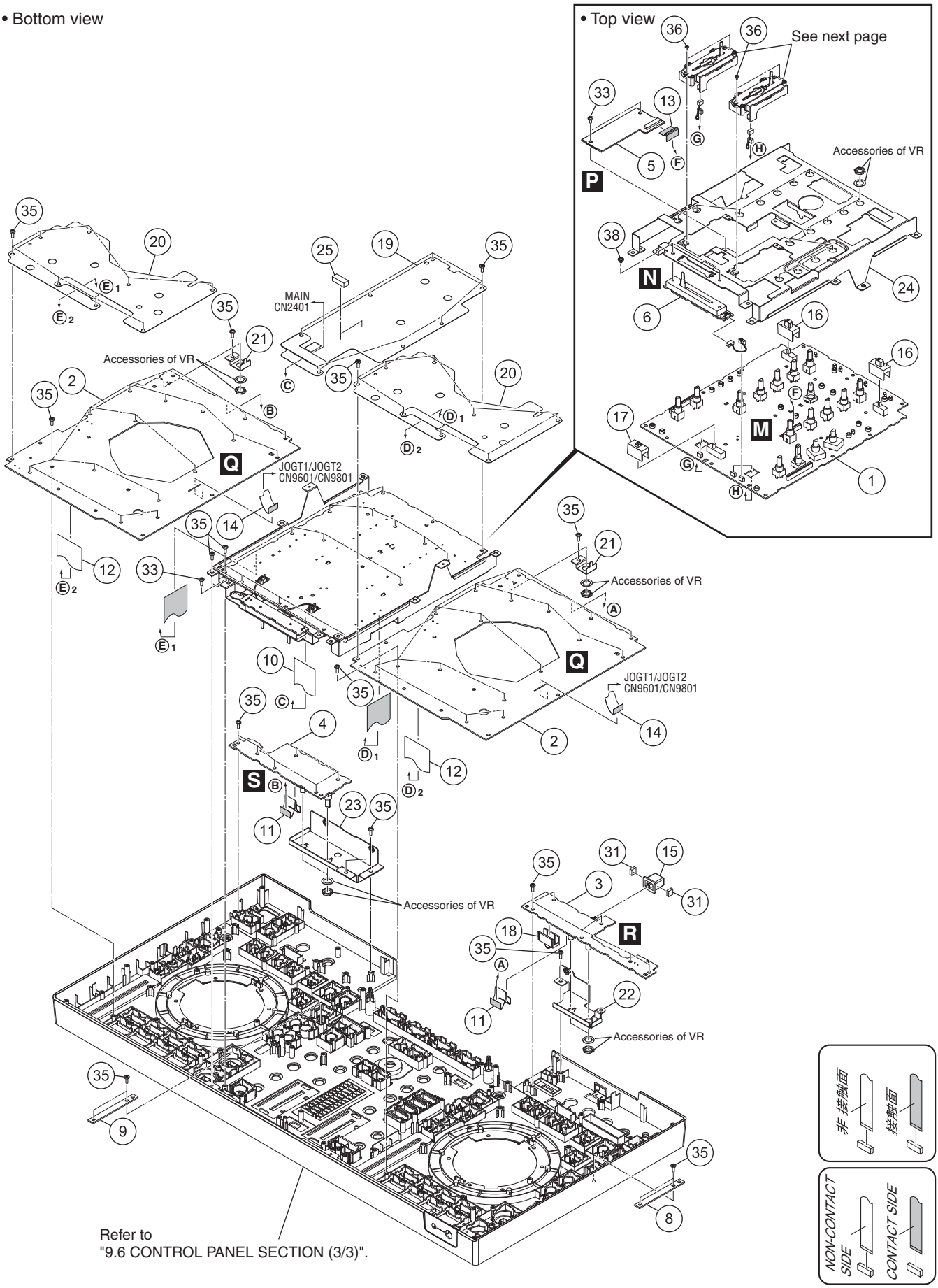

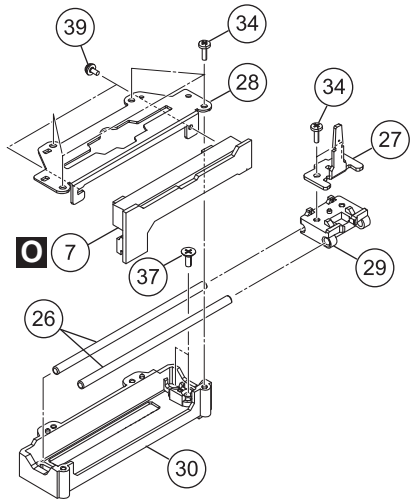

Lubricating oil (GYA1001)

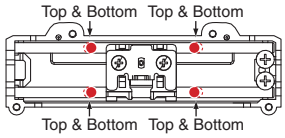

Note:
Greasing must be performed at a total of 8 points, 2 points each for the upper and bottom places of each shaft. (0.4 to 1 mg per point × 8 points) After applying grease, move the slider base back and forth from one end to the other for approximately 10 to 20 strokes, in order to fully spread the grease.

CONTROL PANEL SECTION (2/3) SECTION PARTS LIST

Mark	No.	Description	Part No.
	1	MIXB Assy	DWX3613
	2	CDJB Assy	DWX3614
	3	PNL1 Assy	DWX3628
	4	PNL2 Assy	DWX3629
	5	LLED Assy	DWX3638
	6	CRFB Assy	DWX3626
	7	CHF1 Assy	DWX3624
	8	HLD1 Assy	DWX3645
	9	HLD2 Assy	DWX3646
	10	FFC/35P	DDD1683
	11	FFC/17P	DDD1684
	12	FFC/39P	DDD1687
	13	FFC/19P	DDD1689
	14	FFC/15P	DDD1691
	15	Power Knob	DAC2306
	16	Slide SW Cap	DAC2400
	17	Slide SW Cap (W)	DAC2401
	18	SW Cap	DAC2753
	19	Barrier/1	DEC3563
	20	Barrier/2	DEC3572
	21	VR Stay S	DNH2964
	22	Stay/MC2	DNH3189
	23	Stay/MST	DNH3190
	24	Stay/VR	DNH3191
	25	FFC Cushion	DEC3248
NSP	26	Guide Shaft (S)	DLA1918
	27	Lever Plate	DNH2954
	28	VR Stay	DNH2955
	29	Slider Base	DNK5851
	30	Shaft Holder	DNK5852
	31	Insulation Sheet	DEC3594
	32	•••••	
	33	Screw	BBZ30P060FTC
	34	Screw	BPZ20P060FTC
	35	Screw	BPZ30P080FNI
	36	Screw	BSZ20P040FTB
	37	Screw	CPZ26P080FTC
	38	Screw	IMZ30P040FTC
	39	Screw	PMH20P040FTC

9.6 CONTROL PANEL SECTION (3/3)

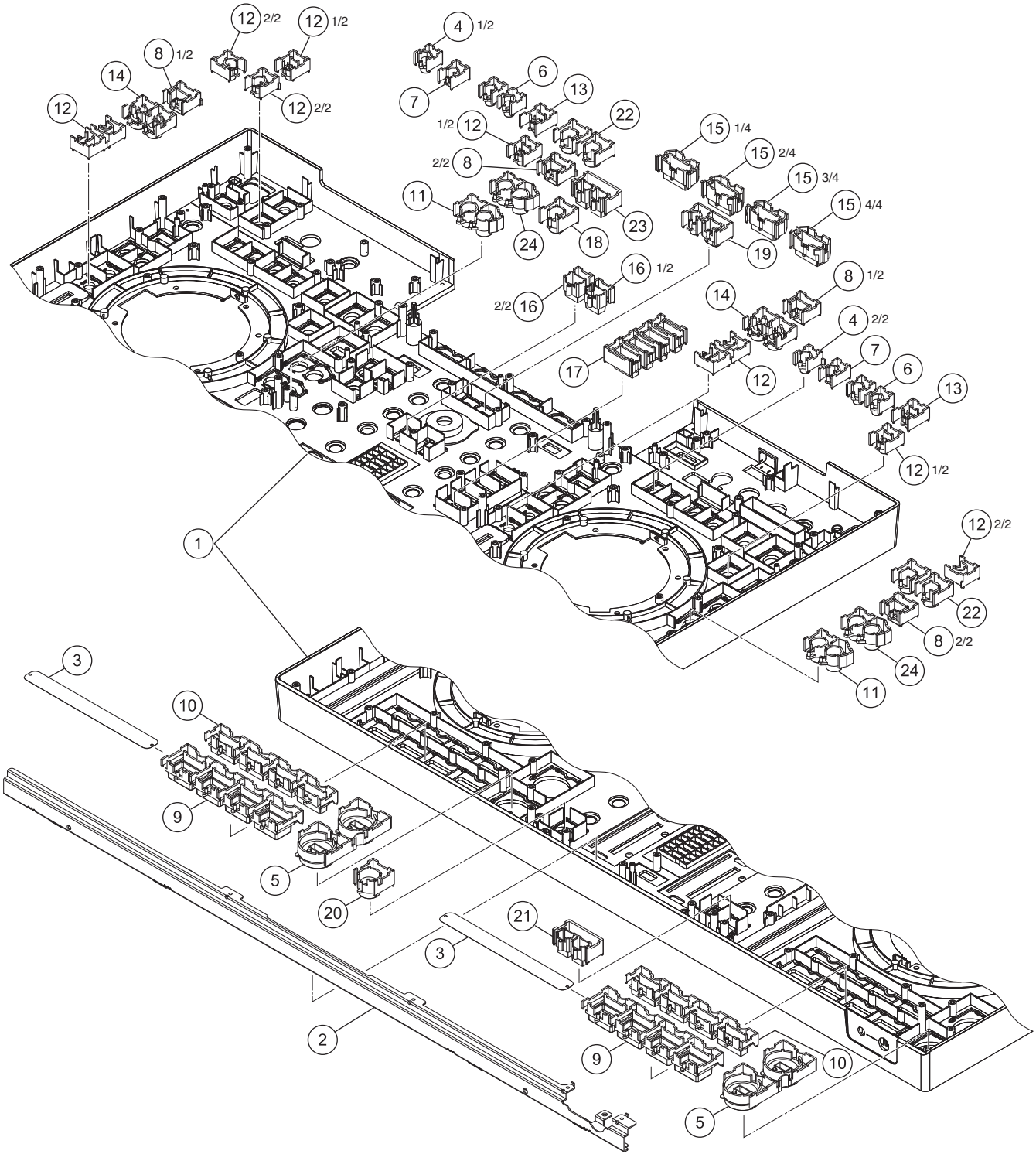

CONTROL PANEL SECTION (3/3) SECTION PARTS LIST

Mark	No.	Description	Part No.
	1	Control Panel	DNK6393
	2	Frame/FRT	DNH3187
	3	Diffuser/BTN	DEC3582
	4	Button/TMP	DAC2845
	5	Button/PLY	DAC3018
	6	Button/CAL	DAC3020
	7	Button/DLT	DAC3021
	8	Button/RVL	DAC3023
	9	Button/HC	DAC3026
	10	Button/SEL	DAC3027
	11	Button/SRC	DAC3028
	12	Button/MT	DAC3029
	13	Button/REL	DAC3030
	14	Button/SYN	DAC3032
	15	Button/MOD	DAC3035
	16	Button/LOD	DAC3036
	17	Button/COL	DAC3037
	18	Button/TAP	DAC3038
	19	Button/BAC	DAC3039
	20	Button/EF	DAC3040
	21	Button/HPC	DAC3073
	22	Button/LOP	DAC3074
	23	Button/BEF	DAC3075
	24	Button/TSR	DAC3076

9.7 JOG DIAL SECTION

• Bottom view

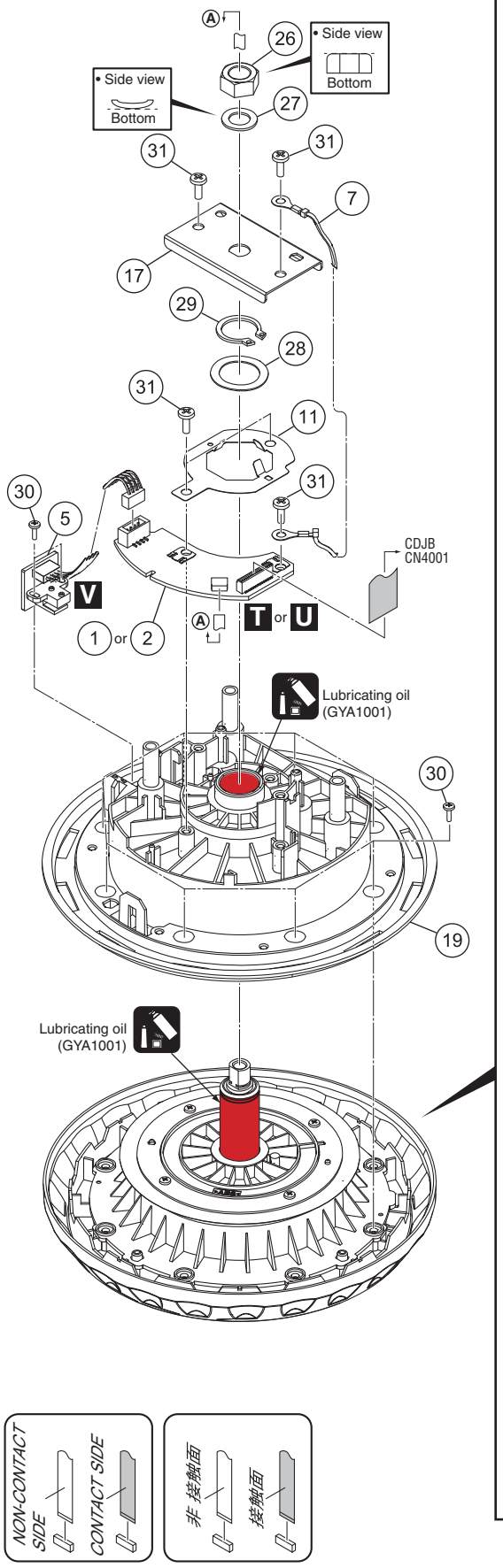

• Top view

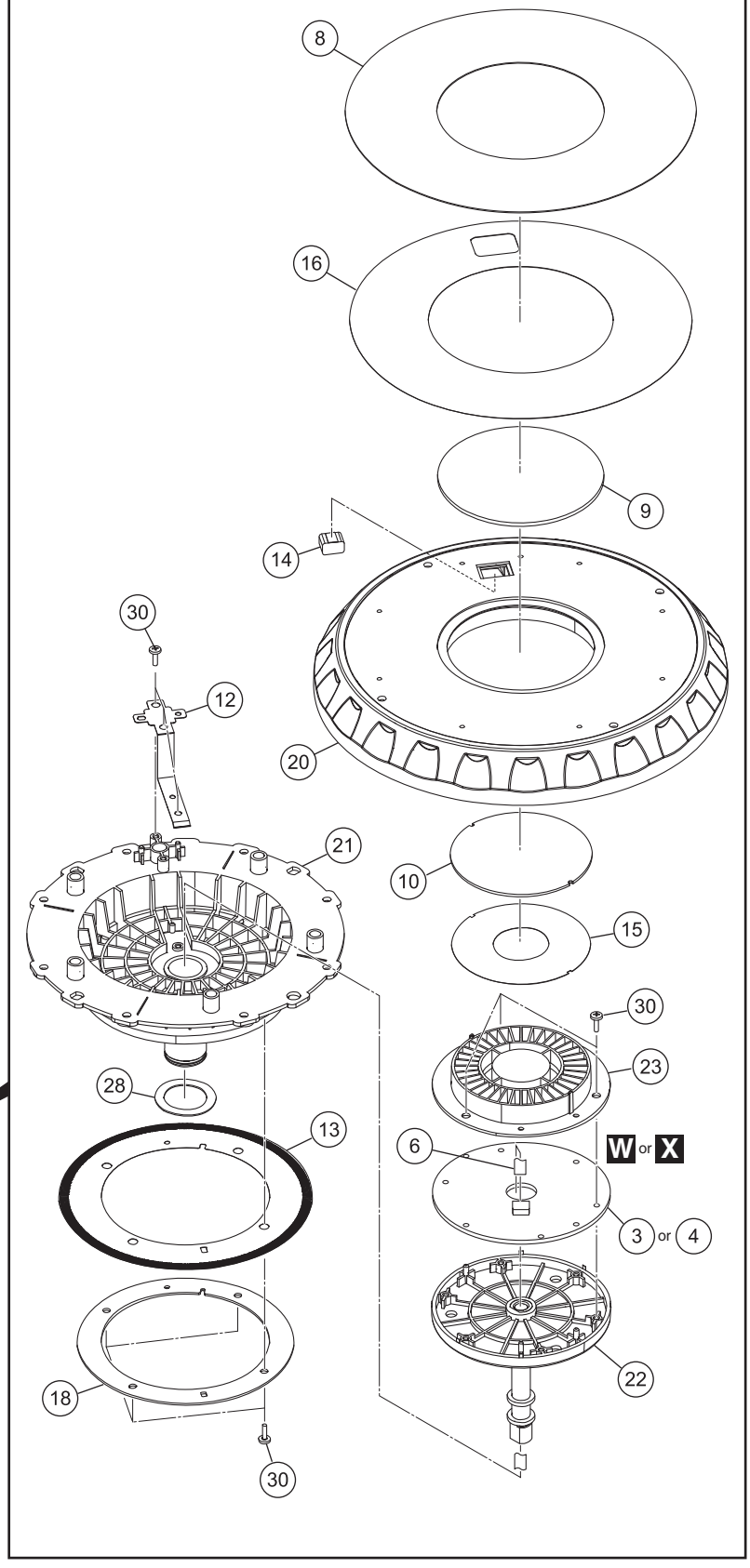

JOG DIAL SECTION PARTS LIST

Mark	No.	Description	Part No.
	1	JOGT1 Assy	DWX3618
	2	JOGT2 Assy	DWX3631
	3	JLED1 Assy	DWX3617
	4	JLED2 Assy	DWX3630
	5	JOGR1 Assy	DWX3619
	6	FFC/6P	DDD1690
	7	Earth Lead Unit	DE005VC0
	8	Plate/JOG	DAH3002
	9	Window/JOG	DAH3003
	10	Window	DAH3004
	11	Leaf Spring/1	DBK1383
	12	Leaf Spring/2	DBK1384
	13	Slit/JOG	DEC3515
	14	Gasket/JOG	DEC3562
	15	Diffuser/LED	DEC3575
	16	DS Tape/JOG	DEH1058
	17	Stay/LED	DNH3167
	18	Bracket/SLT	DNH3168
	19	Holder/JOG	DNK6371
	20	JOG Dial/OUT	DNK6372
	21	JOG Dial/IN	DNK6373
	22	Holder/LED	DNK6374
	23	Spacer/LED	DNK6375
	24	•••••	
	25	•••••	
	26	Nut	NA80FTC
	27	Spring Washer	WN80FTC
	28	Washer	WA154D225D050
	29	Washer	YC150FAC
	30	Screw	BPZ20P060FTC
	31	Screw	BPZ30P080FNI

9.8 LCD SECTION

• Bottom view

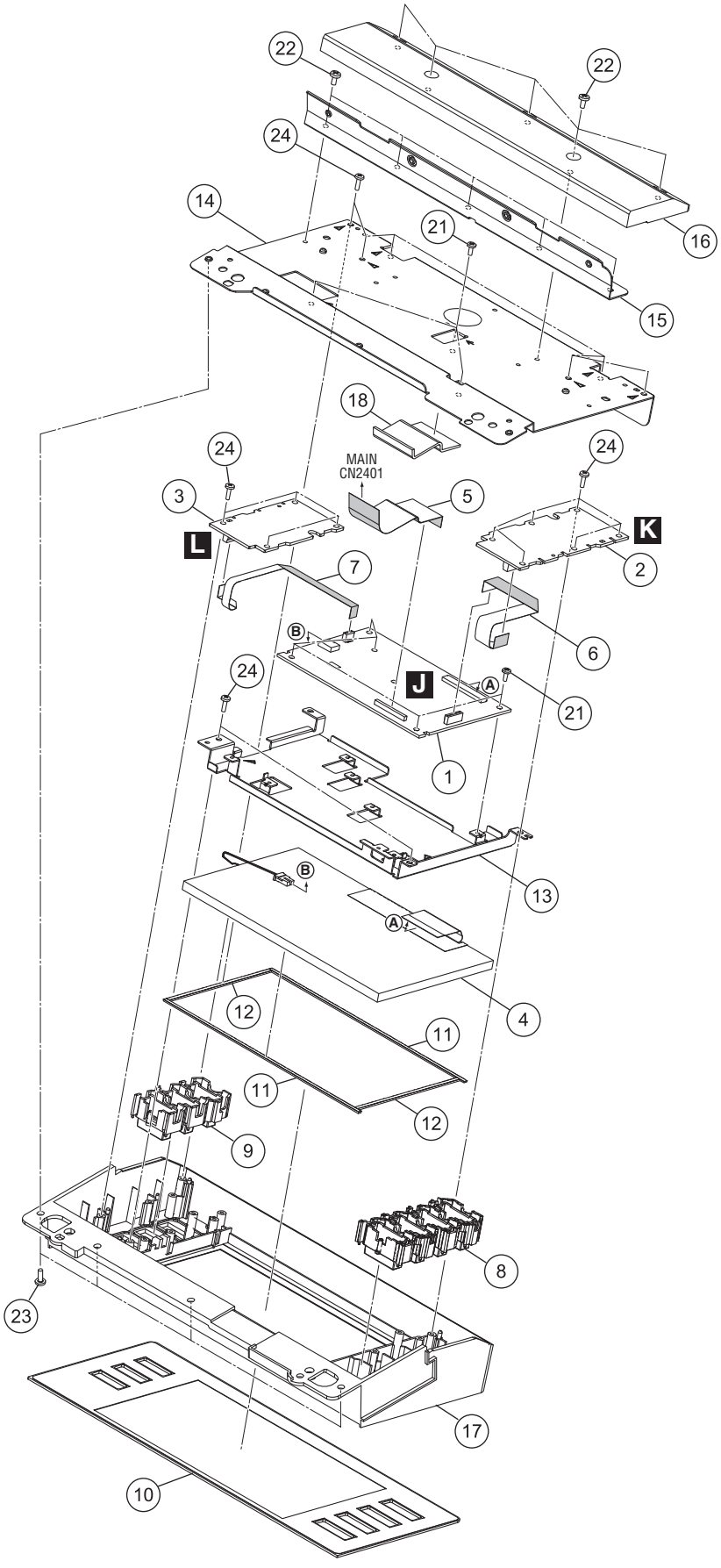

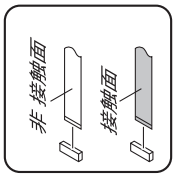

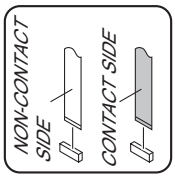

LCD SECTION PARTS LIST

Mark No.	Description	Part No.
1	EXTB Assy	DWX3622
2	DPNL1 Assy	DWX3634
3	DPNL2 Assy	DWX3635
4	TFT LCD	CWX4352
5	FFC/50P	DDD1686
6	FFC/11P	DDD1692
7	FFC/5P	DDD1693
8	Button/DIV	DAC3041
9	Button/TIM	DAC3042
10	Window/LCD	DAH3008
11	Packing/L	DEC3568
12	Packing/S	DEC3569
13	Stay/LCD	DND1282
14	Bracket/LCD	DND1283
15	Angle/LCD	DNH3186
16	Panel/BTM	DNK6388
17	Panel/LCD	DNK6389
18	Insulating Sheet/LCD	DEC3583
19	•••••	
20	•••••	
21	Screw	BBZ26P060FTB
22	Screw	BBZ30P060FTB
23	Screw	BBZ30P080FTC
24	Screw	BPZ26P080FTC