Pioneer DJ

Service Manual



XDJ-RR

ORDER NO.
RRV4687

ALL-IN-ONE DJ SYSTEM

XDJ-RR

THIS MANUAL IS APPLICABLE TO THE FOLLOWING MODEL(S) AND TYPE(S).

Model	Type	Power Requirement	Remarks
XDJ-RR	AXJ	AC 100 V to 240 V	
XDJ-RR	FWLPWXJ	AC 100 V to 240 V	
XDJ-RR	SYXJ	AC 100 V to 240 V	
XDJ-RR	UXJCB	AC 100 V to 240 V	

THIS SERVICE MANUAL SHOULD BE USED TOGETHER WITH THE FOLLOWING MANUAL(S).

Model	Order No.	Remarks
XDJ-RR	RRV4688	SCHEMATIC DIAGRAM, PCB CONNECTION DIAGRAM, PCB PARTS LIST



Pioneer DJ Corporation
6F, Yokohama i-Mark Place, 4-4-5 Minatomirai, Nishi-ku, Yokohama, Kanagawa 220-0012 JAPAN

© 2018 Pioneer DJ Corporation

K-ZZZ SEPT. 2018

SAFETY INFORMATION

This service manual is intended for qualified service technicians; it is not meant for the casual do-it-yourselfer. Qualified technicians have the necessary test equipment and tools, and have been trained to properly and safely repair complex products such as those covered by this manual.

Improperly performed repairs can adversely affect the safety and reliability of the product and may void the warranty. If you are not qualified to perform the repair of this product properly and safely, you should not risk trying to do so and refer the repair to a qualified service technician.

CONTENTS

SAFETY INFORMATION 2
1. SERVICE PRECAUTIONS 4
1.1 NOTES ON SOLDERING 4
1.2 NOTES ON REPLACING 4
1.3 SERVICE NOTICE 5
2. SPECIFICATIONS 6
3. BASIC ITEMS FOR SERVICE 7
3.1 CHECK POINTS AFTER SERVICING 7
3.2 JIGS LIST 7
3.3 PCB LOCATIONS 10
4. BLOCK DIAGRAM 11
4.1 OVERALL WIRING DIAGRAM 11
4.2 SIGNAL BLOCK DIAGRAM 12
4.3 POWER BLOCK DIAGRAM 13
4.4 MATRIX INFORMATION 14
5. DIAGNOSIS 15
5.1 STARTUP SEQUENCE 15
5.2 TROUBLESHOOTING 16
5.3 SIMPLIFIED DIAGNOSTIC PROCEDURE FOR AUDIO SIGNAL 26
5.4 VOLTAGE MONITORING CIRCUIT 27
5.5 ERROR CODE 29
5.6 IC INFORMATION 30
6. SERVICE MODE 31
6.1 TEST MODE 31
6.2 ABOUT THE DEVICE 38
7. DISASSEMBLY 39
8. EACH SETTING AND ADJUSTMENT 53
8.1 NECESSARY ITEMS TO BE NOTED 53
8.2 UPDATING OF THE FIRMWARE 54
8.3 MEASUREMENT OF ROTATION LOAD OF THE JOG DIALS 55
8.4 DEGREE OF LEANING CONFIRMATION OF PHOTO INTERRUPTER 57
8.5 WRITING THE SERIAL NUMBER OF THE UNIT 59
8.6 USER SETABLE ITEMS 60
9. EXPLODED VIEWS AND PARTS LIST 61
9.1 PACKING SECTION 61
9.2 BOTTOM SECTION 63
9.3 CHASSIS SECTION 65
9.4 CONTROL PANEL SECTION (1/2) 66
9.5 CONTROL PANEL SECTION (2/2) 68
9.6 LCD SECTION 70

1. SERVICE PRECAUTIONS

1.1 NOTES ON SOLDERING

- For environmental protection, lead-free solder is used on the printed circuit boards mounted in this unit.
  Be sure to use lead-free solder and a soldering iron that can meet specifications for use with lead-free solders for repairs accompanied by reworking of soldering.
  Do NOT use a soldering iron whose tip temperature cannot be controlled.

1.2 NOTES ON REPLACING

The part listed below is difficult to replace as a discrete component part.
When the part listed in the table is defective, replace whole Assy.

Assy Name	Parts that is Difficult to Replace			
	Part No.	Ref No.	Function	Remarks
MAIN Assy	BD9328EFJ	IC101, IC502	DC-DC CONVERTER (for system power)	IC with heat-pad
	BD9328EFJ	IC303, IC304	DC-DC CONVERTER (for USB power supply)	IC with heat-pad
	IS31BL3555-ZLS4	IC302	DRIVER IC (for LCD backlight)	IC with heat-pad
	BD9851EFV	IC301	DC-DC CONVERTER (for audio power)	IC with heat-pad
	MMPF0100F0AEP	IC501	PO SUPPLY IC (Power management IC)	QFN IC with heat-pad
	MCIMX6D6AVT10AD	IC701	U-PRO IC (Application processor)	BGA
	H5TQ2G63GFR-RDC	IC702, IC703	RAM IC (DDR3)	BGA
	H337S3959	IC902	Authentication Coprocessor	USON package (UltraSmallOutlineNon-lead)
	RTL8152B-VB-CG	IC1601	INTERFACE IC (for USB-LAN conversion)	QFN IC with heat-pad
	RTL8201F-VB-CG	IC1602	INTERFACE IC (LAN PHY)	QFN IC with heat-pad
	USB2512B-AEZG-TR	IC1603, IC1604	INTERFACE IC (USB HUB)	IC with heat-pad
	TPS2557DRB	IC305, IC306	High-side SW IC (for USB current control)	QFN IC with heat-pad
LCDB Assy	R1290K103A	IC3101	DC/DC CONV IC (for LCD power)	QFN IC with heat-pad
DCIN Assy	BD9851EFV	IC3901	DC-DC CONVERTER (for audio power)	IC with heat-pad

1.3 SERVICE NOTICE

■ About the ICs in the MAIN Assy

Replacement of the Flash ROM (IC901) and USB-LAN Conversion (IC1601) in the MAIN Assy are not possible during service, because writing of the MAC address on the production line is required.
Therefore, the Flash ROM (IC901) and USB-LAN Conversion (IC1601) are not supplied as a service part.
If the IC is defective, replace the whole MAIN Assy.
After replacing the the MAIN Assy, writing of the serial number of the unit is required.
For details on how to write the serial number, see "8.5 WRITING THE SERIAL NUMBER OF THE UNIT."

■ VOLTAGE MONITORING

This unit always monitors for power failure and will shut itself off immediately after an error is detected.
All the LEDs other than MASTER REC (WAKE UP) LED will be light off, and all the switches and VRs will be disabled.
Repair the unit according to the diagnostic procedures described in "5.4 VOLTAGE MONITORING CIRCUIT."

■ CONFIRMATION OF USER-SETTING

This product has user-setting data. Be sure to confirm those data before starting repair, although changing them may not have a large effect.
The settings are stored in FLASH ROM (IC901) on the MAIN Assy.
For details, refer to "Changing the settings" in the operating instructions.

■ How to modify when the rattling of the product is occurred

- Place the 12 points (■) of the control panel under the block (Height more than 30 mm and Diameter ϕ about 20 mm is recommended), and attach the chassis part according to the screw tightening order manually.
  (The block is available at the home center, etc.)(Refer to "7 DISASSEMBLY" about the screw tightening order.)
- When there is no block, place the whole surface of the control panel to the curing mat, and attach the chassis part according to the screw tightening order manually.
- Take care not to press the screwdriver strongly to the product in any case.
- Do not use the electric screwdriver.



2. SPECIFICATIONS

AC adapter

Power requirements.....AC 100 V to 240 V, 50 Hz/60 Hz
Rated current.....0.9 A
Rated output.....DC 12 V, 3 A
Power consumption (standby) .....0.4 W

General – Main Unit

Power consumption .....DC 12 V, 2 500 mA
Main unit weight..... 5.2 kg (11.5 lb)
Max. dimensions..... 625 mm (W) × 74.2 mm (H) × 388.5 mm (D)
(24.6 in. (W) × 2.9 in. (H) × 15.3 in. (D))
Tolerable operating temperature.....+5 °C to +35 °C (+41 °F to +95 °F)
Tolerable operating humidity..... 5 % to 85 % (no condensation)

Audio Section

Sampling rate .....44.1 kHz
A/D, D/A converter..... 24-bit
Frequency characteristic
USB, AUX (Line/Portable), MIC.....20 Hz to 20 kHz
S/N ratio (rated output, A-WEIGHTED)
USB .....112 dB
AUX (LINE).....96 dB
AUX (PORTABLE) .....90 dB
MIC.....81 dB
Total harmonic distortion (20 Hz to 20 kHzBW)
USB .....0.003 %
Standard input level / Input impedance
AUX (LINE)..... –12 dBu/47 kΩ
AUX (PORTABLE) ..... –24 dBu/47 kΩ
MIC..... –57 dBu/3 kΩ
Standard output level / Load impedance / Output impedance
MASTER 1.....+6 dBu/10 kΩ/390 Ω or less
MASTER 2..... +2 dBu/10 kΩ/1 kΩ or less
PHONES .....+8 dBu/32 Ω/1 Ω or less
Rated output level / Load impedance
MASTER 1..... +24 dBu/10 kΩ
MASTER 2..... +20 dBu/10 kΩ
Channel equalizer characteristic
HI..... –∞ dB to +6 dB (20 kHz)
MID..... –∞ dB to +6 dB (1 kHz)
LOW .....–∞ dB to +6 dB (20 Hz)
Microphone equalizer characteristic
HI.....–12 dB to +12 dB (10 kHz)
LOW .....–12 dB to +12 dB (100 Hz)

Input / Output terminals

MIC input terminal
XLR connector & 1/4" TRS jack..... 1 set
AUX input terminal
RCA pin jacks..... 1 set
MASTER 1 output terminal
XLR connector..... 1 set
MASTER 2 output terminal
RCA pin jacks..... 1 set
PHONES output terminal
1/4" stereo phone jack ..... 1 set
3.5 mm stereo mini jack..... 1 set
USB terminals
A type .....2 sets
Power supply.....5 V/1 A or less
B type ..... 1 set

— Be sure to use the [MASTER 1] terminals for a balanced output. If they are connected to an unbalanced input (such as RCA) with an XLR to RCA converter cable (or converter adapter), etc., the sound quality may be lowered or noise may occur.
Use the [MASTER 2] terminals for an unbalanced input (such as RCA).
— The specifications and design of this product are subject to change without notice.

Accessories

- Power cord
  (AXJ: ADG7079)
  (FWLPWXJ: ADG1154)
  (SYXJ: ADG1154)
  (UXJCB: XDG3052)
- AC adapter
  (DWR1574)
- USB cable
  (DDE1150)
- Operating Instructions (Quick Start Guide)
  (AXJ: DRH1518)
  (FWLPWXJ: DRH1517)
  (SYXJ: DRH1516)
  (UXJCB: DRH1515)
- Warranty (SYXJ only)
- Software license notice x 2
  (AXJ: DRH1453)
  (FWLPWXJ: DRH1451)
  (SYXJ: DRH1451, DRH1452)
  (UXJCB: DRH1451, DRH1452)
- rekordbox dj license key card

3. BASIC ITEMS FOR SERVICE

3.1 CHECK POINTS AFTER SERVICING

Items to be checked after servicing

To keep the product quality after servicing, confirm recommended check points shown below.

No.	Procedure	Check points
1	Confirm the firmware version in Test mode.	The version of the firmware must be latest. Update firmware to the latest one, if it is not the latest.
2	Confirm whether the customer complain has been solved. If the customer complain occurs with the specific source, such as Mic, each Input, Fader, Equalizer, and Trim, input that specific source for checking.	The customer complain must not be reappeared. Audio and operations must be normal.
3	Check the analog audio input (each channel, MIC). (Make the analog connections with CDJ player, analog player and MIC.)	Audio and operations must be normal.
4	Check the analog audio output (MASTER1, MASTER2).	Audio and operations must be normal.
5	Check the headphones output. (1/4" stereo phone plugs and 3.5 mm stereo mini plugs)	There must be no errors, such as noise, in the audio output.
6	Check the LCD display.	Check that there is no dirt or dust trapped inside the LCD display.
7	Check the LEDs.	Check that all the LEDs light in Test mode.
8	Check operations of the operating elements. (KEY, SW, VR, Fader and PAD etc.)	Make sure that all buttons and controls on the main unit function properly in Test mode.
9	Check the connection of each interface.	
	Playback data contained in the device connected to USB A.	Audio, Search and operations must be normal.
	Confirm the connection with PC with USB B.	The PC must be linked. The rekordbox software must be linked.
10	Confirm user setting contents.	Being repaired to the contents before repairing.
11	Check the appearance of the product.	No scratches or dirt on its appearance after receiving it for service.

See the table below for the items to be checked regarding audio.

Item to be checked regarding audio	
Distortion	Volume too high
Noise	Volume fluctuating
Volume too low	Sound interrupted

3.2 JIGS LIST

■ Jigs List

Jig Name	Part No.	Purpose of use / Remarks
Extension FFC for diagnoses	GGD1250	50 pin FFC, L = 400 mm, for MAIN Assy diagnoses MAIN Assy ⇔ UCOM Assy Refer to "7. DISASSEMBLY".
Extension FFC for diagnoses	GGD1380	60 pin FFC, L = 400mm, for MAIN Assy diagnoses MAIN Assy ⇔ LCDB Assy Refer to "7. DISASSEMBLY".
Software for writing the serial number	GGS1339	For writing the serial number of the unit to the MAIN Assy after replacement. The file is uploaded to Niis. Refer to "8.5 WRITING THE SERIAL NUMBER OF THE UNIT."

■ Lubricants and Glues List

Name	Part No.	Remarks
Lubricating oil	GEM1100	Refer to "7. DISASSEMBLY".

XDJ-RR Service check sheet

1/2

Test mode

Check contents	Check target	Operation part, Setting	Display part (LED)	Display part (LCD)	Status	Check
Version display	Firmware etc.	————	————	**VERSION INFORMATION** SYSTEM EUP APL KERNEL LANGUAGE MAC_ADDR MAC_ADDR(LAN) SERIAL [CH1] JOG uCom ERROR! [CH2] JOG uCom ERROR!	 Firmware version display Language selection display Serial number display Display when left JOG uCom is in failure. Display when right JOG uCom is in failure.	 ☐ Ver.____ ☐ Ver.____ ☐ Rev.____ ☐ Rev.____ ☐ ☐ ☐ ☐ ☐ ☐
All LEDs and LCDs light off (Partly light on dimly)	All LEDs and LCDs	Rotary selector	All LEDs and LCDs rekordbox (white) MIDI (amber) USB1 (green) USB2 (green) BROWSE (green) TAG LIST (green) INFO (green) MENU (green)	DISPLAY OFF	Turn to the right once it light off These LEDs light on dimly	☐
All LEDs and LCDs light on	All LEDs and LCDs	Rotary selector	All LEDs and LCDs	DISPLAY ON	————	☐
LCD patterns	LCD	Rotary selector	————	LCD PATTERN TEST	Cyclic pressed, Color➡Black➡White	☐
keys and LEDs (Individual)	Button	**DECK 1 / 2** PLAY/PAUSE CUE SHIFT TRACK SEARCH (I◀◀) TRACK SEARCH (▶▶I) SEARCH (◀◀) SEARCH (▶▶) LOOP IN LOOP OUT RELOOP/EXIT CUE/LOOP CALL (◀) CUE/LOOP CALL (▶) DELETE MEMORY BEAT SYNC SYNC BEAT SYNC MASTER JOG MODE (VINYL) JOG (touch) JOG (rotate clockwise) JOG (rotate counterclockwise) TEMPO MASTER TEMPO HOT CUE AUTO BEAT LOOP SLIP LOOP BEAT JUMP PAD1 PAD2 PAD3 PAD4	 PLAY/PAUSE (green) CUE (amber) RELOOP/EXIT (amber) LOOP IN (amber) LOOP OUT (amber) REV (amber) SLIP (amber) LOOP IN (amber) LOOP OUT (amber) RELOOP/EXIT (amber) JOG MODE/VINYL (blue) BEAT SYNC SYNC (white) BEAT SYNC MASTER (amber) MASTER TEMPO (red) SYNC (white) BEAT SYNC MASTER (amber) JOG MODE/VINYL (blue) JOG MODE/VINYL (blue) LOOP IN (amber) LOOP OUT (amber) BEAT SYNC MASTER (amber) MASTER TEMPO (red) HOT CUE (green) AUTO BEAT LOOP (green) SLIP LOOP (green) BEAT JUMP (green) PAD1 (blue) PAD2 (blue) PAD3 (blue) PAD4 (blue)	**KEY/LED TEST** CH1 / CH2 PLAY/PAUSE CH1 / CH2 CUE CH1 / CH2 SHIFT CH1 / CH2 TRACK REV CH1 / CH2 TRACK FWD CH1 / CH2 SEARCH REV CH1 / CH2 SEARCH FWD CH1 / CH2 LOOP IN CH1 / CH2 LOOP OUT CH1 / CH2 RELOOP CH1 / CH2 CALL PREV CH1 / CH2 CALL NEXT CH1 / CH2 CUE DELETE CH1 / CH2 CUE MEMORY CH1 / CH2 SYNC CH1 / CH2 MASTER CH1 / CH2 VINYL CH1 / CH2 JOG TOUCH CH1 / CH2 JOG TOUCH CH1 / CH2 JOG TOUCH CH1 / CH2 TEMPO RANGE CH1 / CH2 MASTER TEMPO CH1 / CH2 HOT CUE CH1 / CH2 AUTO BEAT LOOP CH1 / CH2 SLIP LOOP CH1 / CH2 BEAT JUMP CH1 / CH2 PAD1 CH1 / CH2 PAD2 CH1 / CH2 PAD3 CH1 / CH2 PAD4	 Light on when pushed, and light off when released.	 ☐ / ☐
		Common rekordbox MIDI USB1 USB2 BROWSE (SEARCH) TAG LIST INFO MENU (UTILITY) QUANTIZE TIME MODE (AUTO CUE) BACK TAG TRACK/REMOVE DECK1/2 Rotary selector LOAD1 LOAD2 USB1 STOP USB2 STOP MASTER REC (WAKE UP) TRACK MARK	 rekordbox (white) MIDI (amber) USB1 (green) USB2 (green) BROWSE (green) TAG LIST (green) INFO (green) MENU (green) QUANTIZE (red) MIC indicator BROWSE (green) TAG LIST (green) MENU (green) INFO (green) LOAD1 (white) LOAD2 (white) USB1 STOP indicator USB2 STOP indicator MASTER REC (red) MASTER REC (red)	 MEDIA RB MEDIA PC MEDIA USB1 MEDIA USB2 BROWSE TAG LIST INFO MENU DECK QUANTIZE TIME MODE/ACUE BACK TAG TRACK DECK SELECT ROTARY SELECTOR CH1 LOAD CH2 LOAD CH1 USB STOP CH2 USB STOP USB REC TRACK MARK	 Light on when pushed, and light on dimly when released. Light on when pushed, and light off when released. Light on when pushed, and light on dimly when released. Light on when pushed, and light off when released.	 ☐
		Mixer SOUND COLOR FX DUB ECHO SOUND COLOR FX PITCH SOUND COLOR FX NOISE SOUND COLOR FX FILTER CUE CH1 CUE CH2 HEADPHONES MASTER BFX ON/OFF BEAT (◀) BEAT (▶) Channel fader 1 Channel fader 2 Crossfader	 CFX DUB_ECHO (white) CFX PITCH (white) CFX NOISE (white) CFX FILTER (white) HEADPHONES CUE1 (amber) HEADPHONES CUE2 (amber) HEADPHONES MASTER (amber) BFX ON/OFF (blue) CLIP indicator BFX ON/OFF indicator LEVEL METER CH1 LEVEL METER CH2 LEVEL METER MASTER	 CFX DUB ECHO CFX PITCH CFX NOISE CFX FILTER CH1 HEADPHONE CUE CH CH2 HEADPHONE CUE CH MASTER CUE EFFECT ON OFF BEAT PREV BEAT NEXT	 Light on when pushed, and light off when released. Level indicator light on when VR position	 ☐ ☐ ☐ ☐ ☐ ☐ ☐ ☐ ☐ ☐ ☐ ☐ ☐ ☐

2/2

Test mode

Check contents	Check target	Operation part, Setting	Display part (LED)	Display part (LCD)	Status	Check
SW individual	SW select	**BEAT EFFECTS** ECHO / REVERB / FLANGER	————	**SW TEST** ECHO / REVERB / FLANGER		□
		EFFECT CHANNEL 1 / 2 / MASTER		1 / 2 / MASTER		□
		AUX OFF / LINE / PORTABLE		OFF / LINE / PORTABLE	Display on LCD when selected	□
		CROSS FADER CURVE THRU / ↗' ↗		LEFT / CENTER / RIGHT		□
		MIC OFF / ON / TALKOVER		OFF / ON / TALKOVER		□
Values of the rotary variable controls and sliders	Volume operation	CH1 / CH2 TRIM	————	**VOL TEST** CH1 / CH2 TRIM xxx (value)	Display the value (000 to 3FF hexadecimal) to the position of VR.	□ / □
		CH1 / CH2 EQ HI		CH1 / CH2 HI xxx (value)		□ / □
		CH1 / CH2 EQ MID		CH1 / CH2 MID xxx (value)		□ / □
		CH1 / CH2 EQ LOW		CH1 / CH2 LOW xxx (value)		□ / □
		CH1 / CH2 COLOR		CH1 / CH2 COLOR xxx (value)	Display the value (000 to 3FC hexadecimal) to the position of VR.	□ / □
		CH1 / CH2 Channel fader		CH1 / CH2 FADER xxx (value)	Display the value (000 to 3FF hexadecimal) to the position of VR.	□ / □
		CH1 / CH2 TEMPO		CH1 / CH2 TEMPO xxx (value)	Display the value (000 to 3FF0 hexadecimal) to the position of VR.	□ / □
		MIC EQ HI		MIC EQ HI xxx (value)	Display the value (000 to 3FF hexadecimal) to the position of VR.	□
		MIC EQ LOW		MIC EQ LOW xxx (value)		□
		HEADPHONES MIXING		HP MIXING xxx (value)		□
		HEADPHONE LEVEL		HP LEVEL xxx (value)		□
		AUX TRIM		AUX TRIM xxx (value)		□
		Crossfader		CROSS FADER xxx (value)		□
		LEVEL/DEPTH		LEVEL DEPTH xxx (value)		□
		MASTER LEVEL		MASTER LEVEL xxx (value)		□
Rotary selector	Select operation	ROTARY SELECTOR	————	**SELECTOR TEST** SELECTOR xx (value)	Display the value (00 to FF in hexadecimal) according to the position of the selector	□

3.3 PCB LOCATIONS

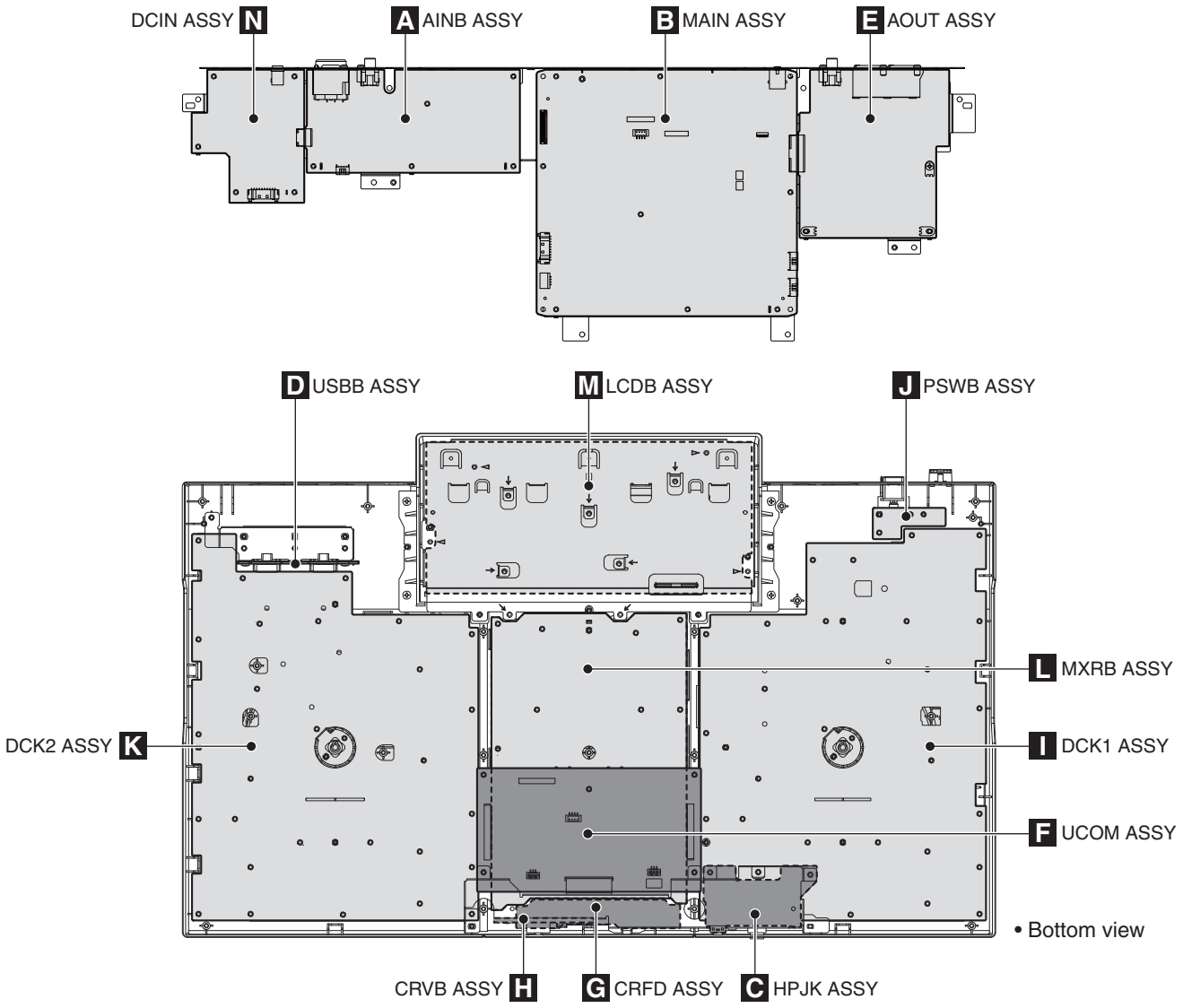

NOTES: ● *Parts marked by "NSP" are generally unavailable because they are not in our Master Spare Parts List.*
● *The ⚠ mark found on some component parts indicates the importance of the safety factor of the part. Therefore, when replacing, be sure to use parts of identical designation.*

LIST OF ASSEMBLIES

Mark	No.	Description	Part No.
	1	..MAIN ASSY	DWX4165
NSP	1	..LCDA ASSY	DWM2686
	2	..LCDB ASSY	DWX4166
	2	..UCOM ASSY	DWX4167
	2	..DCIN ASSY	DWX4168
	2	..USBB ASSY	DWX4169
NSP	1	..PNL1 ASSY	DWM2687
	2	..DCK1 ASSY	DWX4170
	2	..PSWB ASSY	DWX4171
	2	..CRVB ASSY	DWX4172
NSP	1	..PNL2 ASSY	DWM2688
	2	..DCK2 ASSY	DWX4173
	2	..HPJK ASSY	DWX4174
NSP	1	..PNL3 ASSY	DWM2689
	2	..MXRB ASSY	DWX4175
	2	..AOUT ASSY	DWX4176
	2	..CRFD ASSY	DWX4177
	2	..AINB ASSY	DWX4178

4. BLOCK DIAGRAM

- 部品を発注する場合は、必ず「分解図と部品表」または「電気部品表」を参照してください。
- ⚠ 印の部品は、安全上重要な部品です。
  交換するときは、安全および性能維持のため必ず指定の部品をご使用ください。
- ⬭ 印は電源の供給源を示しています。

- When ordering service parts, be sure to refer to "EXPLODED VIEWS and PARTS LIST" or "PCB PARTS LIST".
- The ⚠ mark found on some component parts indicates the importance of the safety factor of the part.
  Therefore, when replacing, be sure to use parts of identical designation.
- ⬭ : The power supply is shown with the marked box.

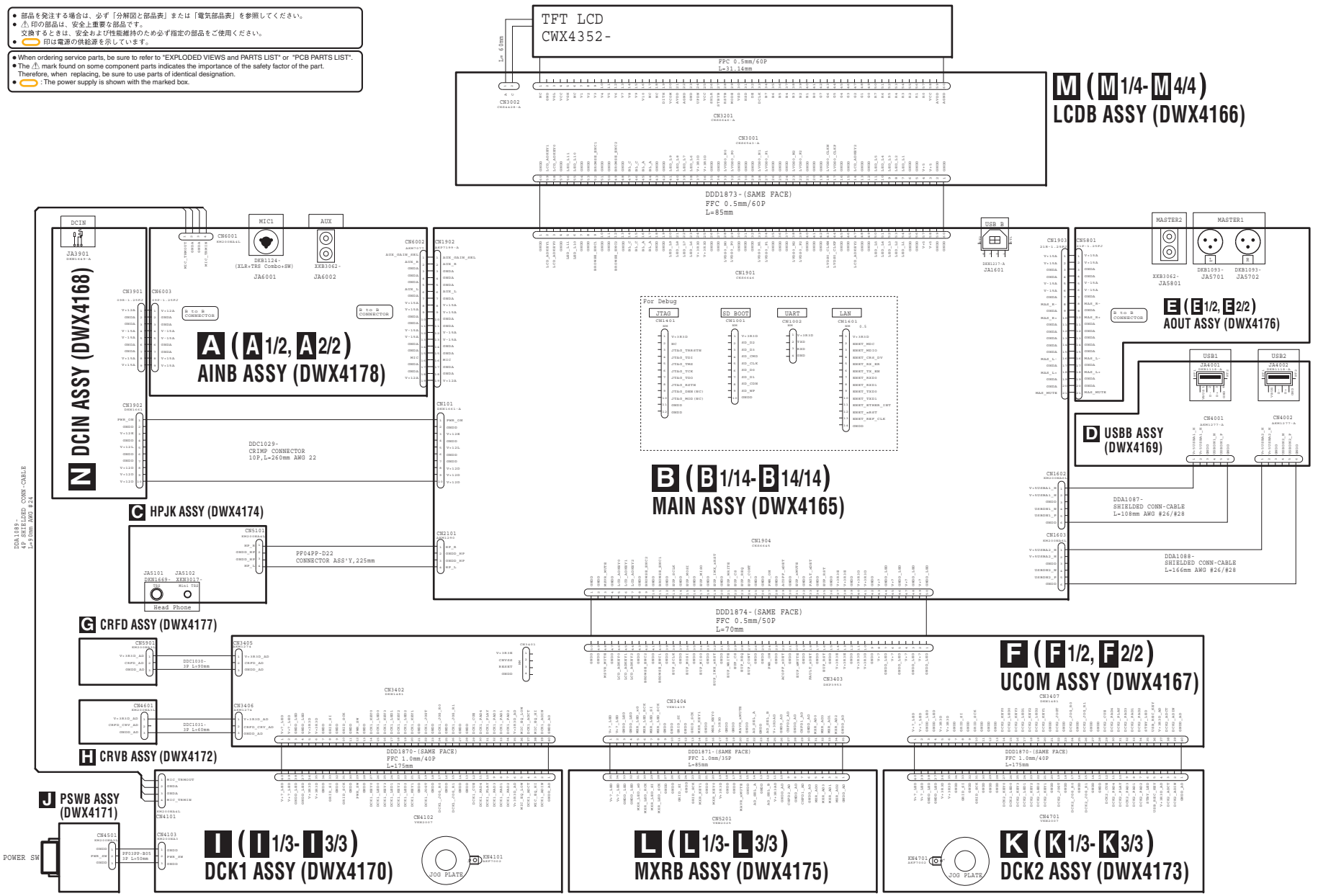

4.2 SIGNAL BLOCK DIAGRAM

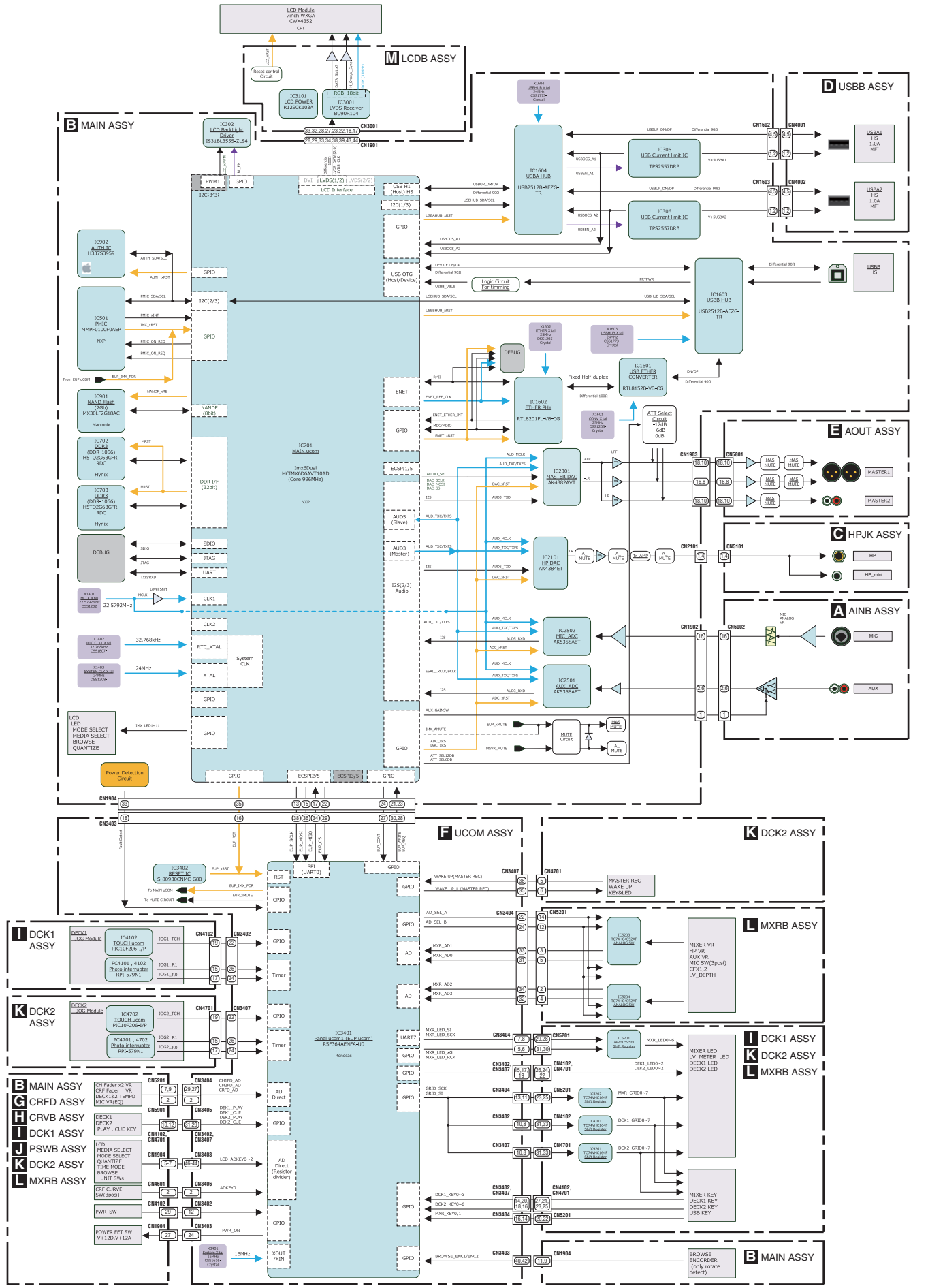

4.3 POWER BLOCK DIAGRAM

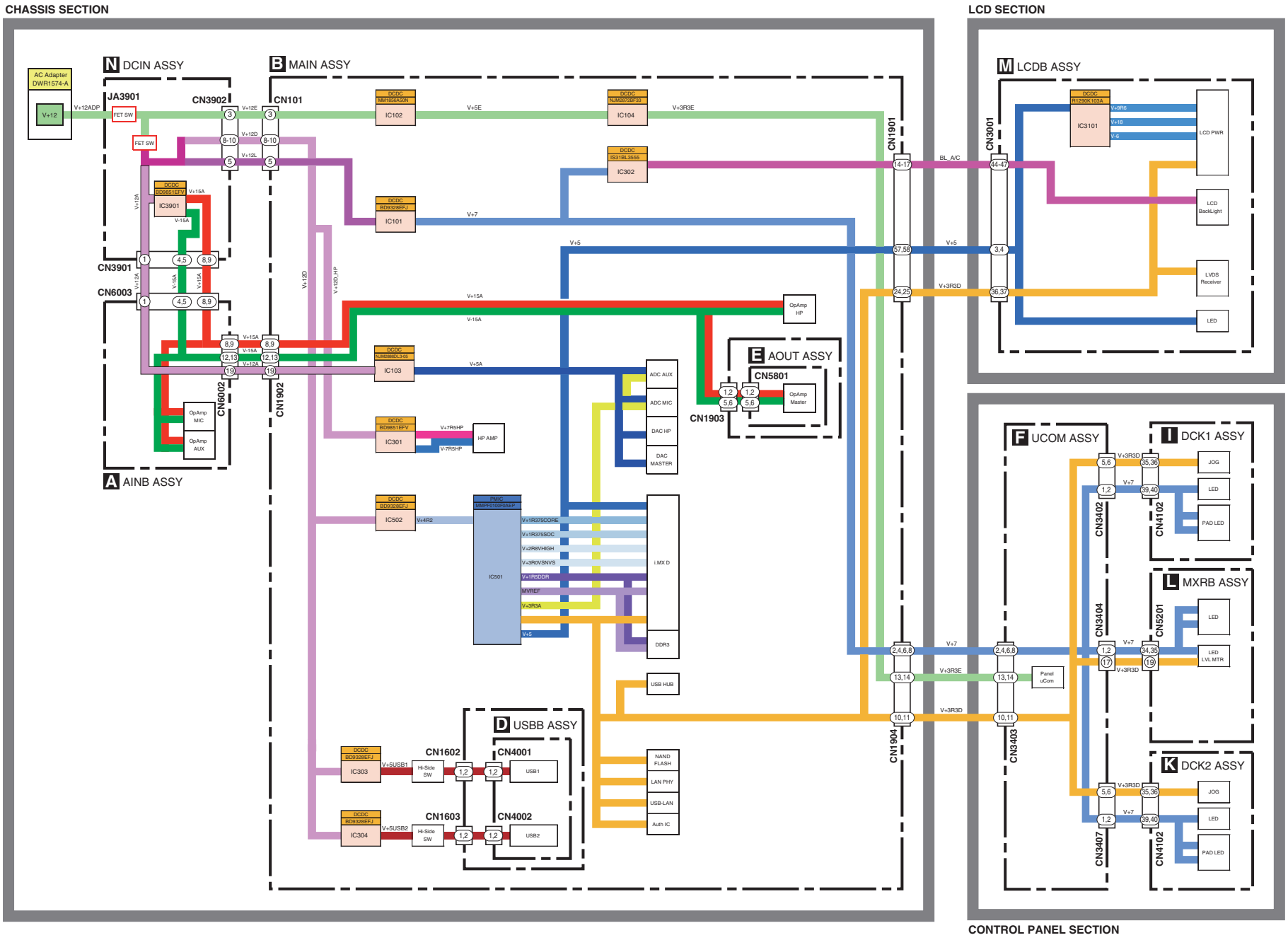

4.4 MATRIX INFORMATION

■ KEY Assign

DCK1 matrix

SIGNAL	GRID0	GRID1	GRID2	GRID3	GRID4	GRID5	GRID6	GRID7
DECK1_KEY0	-	SEARCH ►►	SEARCH ◄◄	SHIFT	-	-	T_SEARCH ►►I	T-SEARCH I◄◄
DECK1_KEY1	VINYL	M-TMP	TMP RANGE	SYNC	MASTER	MIC_SEL_OFF	MIC_SEL_TALKOVER	-
DECK1_KEY2	-	MEMORY	DELETE	CALL ►	CALL ◄	RELOOP	LOOP OUT	LOOP IN
DECK1_KEY3	HOTCUE	BEAT LOOP	SLIP LOOP	BEAT JUMP	-	-	-	-

DCK2 matrix

SIGNAL	GRID0	GRID1	GRID2	GRID3	GRID4	GRID5	GRID6	GRID7
DECK2_KEY0	-	SEARCH ►►	SEARCH ◄◄	SHIFT	-	-	T_SEARCH ►►I	T-SEARCH I◄◄
DECK2_KEY1	VINYL	M-TMP	TMP RANGE	SYNC	MASTER	TRACK MARK	USB1_STOP	USB2_STOP
DECK2_KEY2	-	MEMORY	DELETE	CALL ►	CALL ◄	RELOOP	LOOP OUT	LOOP IN
DECK2_KEY3	HOTCUE	BEAT LOOP	SLIP LOOP	BEAT JUMP	-	-	-	-

MXRB matrix

SIGNAL	GRID0	GRID1	GRID2	GRID3	GRID4	GRID5	GRID6	GRID7
MXR_KEY0	AUX_SEL_OFF	AUX_SEL_12dB	FILTER	PITCH	HP_2ch	HP_1ch	DUB ECHO	NOISE
MXR_KEY1	BEAT ◄	BEAT ►	BFX_SEL_1	BFX_SEL_3	BFX_CHSEL_1	BFX_CHSEL_MAS	BFX_ON	-

■ LED Assign

DCK1 matrix

SIGNAL	GRID0	GRID1	GRID2	GRID3	GRID4	GRID5	GRID6	GRID7
DCK1_LED0	LOOP IN	HOTCUE	PLAY	PLAY	MASTER	VINYL	-	RELOOP
DCK1_LED1	LOOP OUT	BEAT LOOP	CUE	CUE	MASTER TEMPO	SYNC	-	MIC_LED
DCK1_LED2	BEAT JUMP	SLIP LOOP	-	-	PAD4	PAD3	PAD2	PAD1

DCK2 matrix

SIGNAL	GRID0	GRID1	GRID2	GRID3	GRID4	GRID5	GRID6	GRID7
DCK2_LED0	LOOP IN	HOTCUE	PLAY	PLAY	MASTER	VINYL	USB STOP1	RELOOP
DCK2_LED1	LOOP OUT	BEAT LOOP	CUE	CUE	MASTER TEMPO	SYNC	USB STOP2	-
DCK2_LED2	BEAT JUMP	SLIP LOOP	-	-	PAD4	PAD3	PAD2	PAD1

MXRB matrix

SIGNAL	GRID0	GRID1	GRID2	GRID3	GRID4	GRID5	GRID6	GRID7
MXR_LED0	DUB ECHO	DUB ECHO	PITCH	PITCH	-	-	-	HPCUE1
MXR_LED1	NOISE	NOISE	FILTER	FILTER	-	-	-	HPCUE2
MXR_LED2	CH1_12dB	CH2_12dB	-	-	MASL_15dB	MASR_15dB	MASR_12dB	MASL_12dB
MXR_LED3	CH1_9dB	CH2_9dB	CH2_6dB	CH1_6dB	MASL_9dB	MASR_9dB	BFX_ON	CLIP
MXR_LED4	CH1_3dB	CH2_3dB	CH2_0dB	CH1_0dB	MASL_6dB	MASR_6dB	MASR_0dB	MASL_0dB
MXR_LED5	CH1_-6dB	CH2_-6dB	CH2_-12dB	CH1_-12dB	MASL_-6dB	MASR_-6dB	MASR_-12dB	MASL_-12dB
MXR_LED6	CH1_-18dB	CH2_-18dB	CH2_-24dB	CH1_-24dB	MASL_-18dB	MASR_-18dB	MASR_-24dB	MASL_-24dB

■ VR Analog SW

MXRB assign

VR point	Analog SW No.	Signal name	Control IC	Pin No.
CFX2	IC5203	MXR_AD0	IC3401	88
LOW2				
MID2				
HI2				
AUX		MXR_AD1		90
MASTER_LV				
TRIM1				
TRIM2				
HP_MIX	IC5204	MXR_AD2		91
LOW1				
HP_LV				
LV/DEPTH				
HI1		MXR_AD3		89
CFX1				
MID1				
-				

5. DIAGNOSIS

5.1 STARTUP SEQUENCE

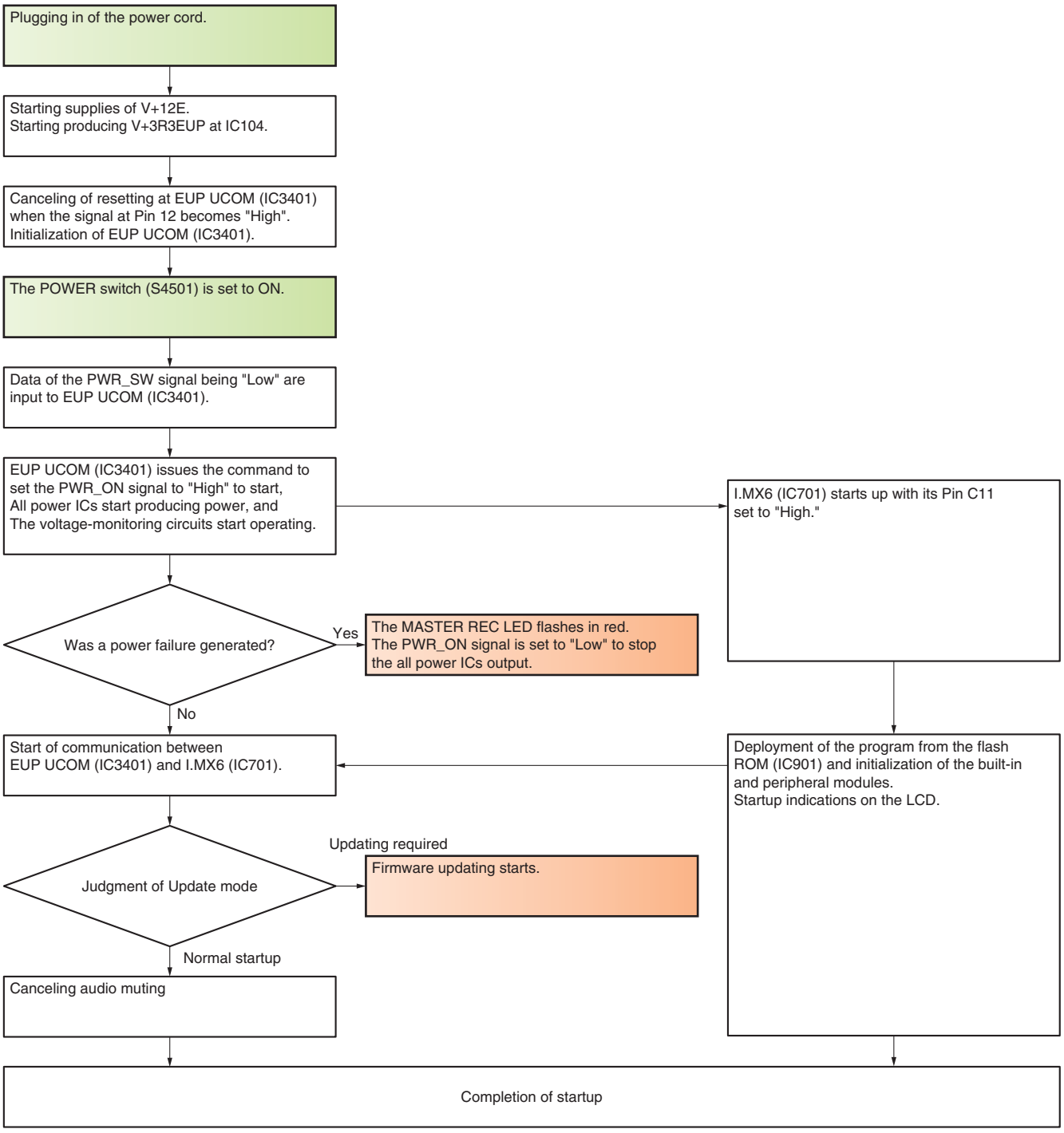

5.2 TROUBLESHOOTING

Before starting troubleshooting, check that all cable connectors are properly engaged.

Before replacing a microcomputer, check also the items shown below.

In a case where a failure of EUP UCOM (IC3401) is suspected

→ Check the voltage of the EUP UCOM (IC3401), and canceling of reset.
- UCOM Assy:
  V+3R3E (3.3 V)
  Pin 12 of IC3401 (RST) : 3.3 V

If the voltage of these parts are normal, replace the EUP UCOM (IC3401).
If abnormal, check their peripheral circuits.

Failure in startup and in the communication system

Failure in the power system

In the following diagnostic procedure, because power will be forcibly supplied even if any power circuit is abnormal, the defective point may produce heat and the circuit that uses the power supply may fail if power supply continues. Be sure to disconnect the AC power cord some seconds after it is connected during the diagnostic procedure so that the unit will not remain forcibly powered.

The unit does not startup even though the POWER switch is set to ON.

↓

Before starting checking the power system, be sure to check if each power IC is short-circuited with GND, referring to "10.39 VOLTAGES."

↓ No short-circuit

Confirmation of SW power

Check the MASTER REC LED.

Light off → Check the voltage of FAULT_xDET.

3.3 V → A type of abnormality that cannot be detected by the voltage monitoring circuit is suspected. Check if the voltage value is within the normal range, referring to "10.39 VOLTAGES."

0 V → Check the connection wires between the each boards are normal. And check the fuse (P3901). If these are normal, check the circuit of "V+12E" and "V+3E", and replace the defective parts.

Flashing in red

↓

Disconnect the Power cord from the product then remove R138 (0 ohm) from the MAIN Assy. Reconnect the Power cord then set the POWER switch to ON to monitor each power IC. IMPORTANT: Because the voltage monitoring circuit is disabled, disconnect the AC power cord within several seconds.

→ Check the voltage at each block. Check the circuits or power ICs that use the power supply with abnormal voltage.

→ Reattach R138 (0 ohm) to the MAIN Assy. (For enabling the voltage-monitoring function) Replace the defective part after check that the voltage-monitoring function properly.

If the MASTER REC LED is flashing in red or the voltage of FAULT_xDET is 0 V, it is recommended that the following circuits be checked first:
- Peripheral circuits of IC3901 (V+15A/V-15A generation circuits)
- Q3901, Q3903, D3902, D3906

Failure in startup and in the communication system

Startup is not completed.

After the POWER switch is set to ON, the startup procedure stops in mid-course, with the message "Connect USB storage device to top USB1 port" displayed on the LCD.

→ Perform updating of the firmware.

Startup has been completed properly.

→ Failure of previous updating of the firmware was the cause. (Power failure occurred during previous updating.)

Startup was not completed, or updating failed.

→ See "Updating of the firmware does not start" in this flowchart.

Startup is not completed.

After the POWER switch is set to ON, the startup procedure stops in mid-course, with the message "PIONEER DJ rekordbox" displayed on the LCD.

→ Communication between I.MX (IC701) on MAIN Assy and EUP UCOM(IC4001) in UCOM Assy has not been established.
Check cable that connect the MAIN Assy and UCOM Assy.
If no problem is found, replace the MAIN Assy. When the system is not improved, replace the UCOM Assy.

Updating not available

Updating of the firmware does not start.

→ When the unit is started in Update mode, does the indication on the LCD become that for Update mode?

No → Check the keys (switches), using the diagnosis in Test mode or referring to "No operation with keys (switches)."
• DCK1 Assy: USB1 STOP
RELOOP/EXIT
If the keys (switches)function normally, the EUP UCOM (IC3401) may be in failure. Replace it.

Yes → Check if the updating notification circuit on the UCOM Assy is normal.
Check EUP_WRITE while displaying the update mode.

→ Is the voltage at Pin 33 of IC3401 (EUP_WRITE) 3.3 V?

No → Replace the EUP UCOM (IC3401).

Yes → Check if data on the USB memory device have been read. See "Data of the device (USB memory device, hard disk, etc.) connected to the USB A connector cannot be read" in this flowchart.

→ I.MX (IC701) cannot recognize the updating status. Check connection between the MAIN Assy and UCOM Assy.
Check also the line connected to Pin 21 of CN1904 (EUP_WRITE) on the MAIN Assy.
If no problem is found, I.MX (IC701) may be defective. Replace the MAIN Assy.

The device connected to the USB connector and the connector itself are normal.

Updating not available

Updating of the firmware failed.
"MAIN firmware update failed" is displayed.

→ Updating is not possible, because the program in the microcomputer is abnormal, the flash ROM or EUP UCOM is in failure, or the communication line is in failure.
Check the indications displayed on the LCD during updating. The updating status of the flash ROM (IC901) in the MAIN Assy is indicated on the upper line (MAIN). The updating status of the EUP UCOM (IC3401) in the UCOM Assy is indicated on the lower line (EUP). If the progress of a status bar is stopped in mid-course, rewriting of the corresponding ROM or microcomputer failed.

→ Rewriting of which one failed, the flash ROM or microcomputer?

Flash ROM → Check the periphery of the flash ROM (IC901). If there is no problem, replace the MAIN Assy.

EUP UCOM → Check cable that connect the MAIN Assy and UCOM Assy.
If no problems are found in peripheral circuits, connectors, or cables, replace the EUP UCOM (IC3401).

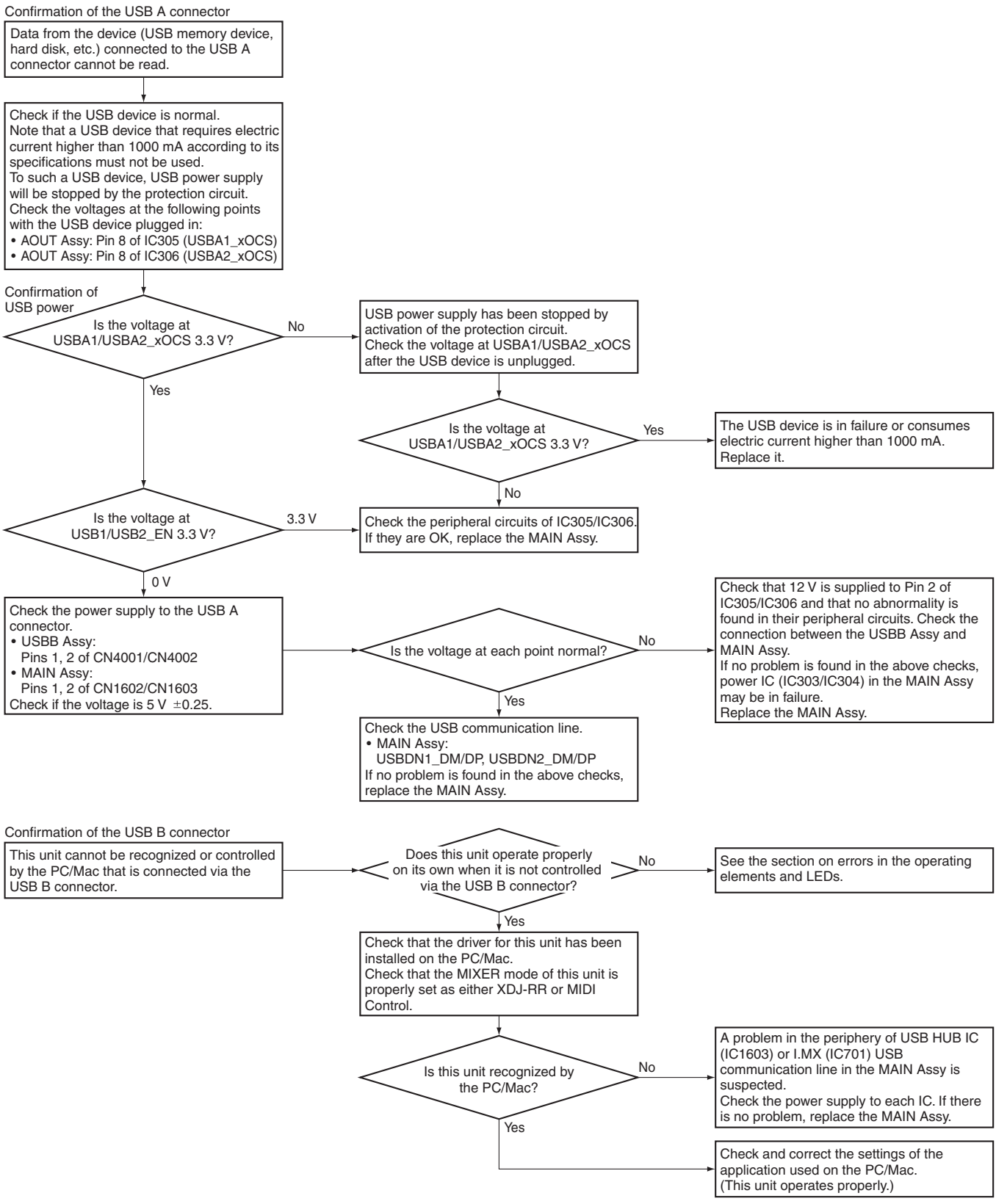
Confirmation of the USB A connector
Data from the device (USB memory device, hard disk, etc.) connected to the USB A connector cannot be read.
Check if the USB device is normal.
Note that a USB device that requires electric current higher than 1000 mA according to its specifications must not be used.
To such a USB device, USB power supply will be stopped by the protection circuit.
Check the voltages at the following points with the USB device plugged in:
• AOUT Assy: Pin 8 of IC305 (USBA1_xOCS)
• AOUT Assy: Pin 8 of IC306 (USBA2_xOCS)
Confirmation of USB power
Is the voltage at USBA1/USBA2_xOCS 3.3 V?
No
USB power supply has been stopped by activation of the protection circuit.
Check the voltage at USBA1/USBA2_xOCS after the USB device is unplugged.
Is the voltage at USBA1/USBA2_xOCS 3.3 V?
Yes
The USB device is in failure or consumes electric current higher than 1000 mA.
Replace it.
No
Yes
Is the voltage at USB1/USB2_EN 3.3 V?
3.3 V
Check the peripheral circuits of IC305/IC306.
If they are OK, replace the MAIN Assy.
0 V
Check the power supply to the USB A connector.
• USBB Assy:
Pins 1, 2 of CN4001/CN4002
• MAIN Assy:
Pins 1, 2 of CN1602/CN1603
Check if the voltage is 5 V ±0.25.
Is the voltage at each point normal?
No
Check that 12 V is supplied to Pin 2 of IC305/IC306 and that no abnormality is found in their peripheral circuits. Check the connection between the USBB Assy and MAIN Assy.
If no problem is found in the above checks, power IC (IC303/IC304) in the MAIN Assy may be in failure.
Replace the MAIN Assy.
Yes
Check the USB communication line.
• MAIN Assy:
USBDN1_DM/DP, USBDN2_DM/DP
If no problem is found in the above checks, replace the MAIN Assy.
Confirmation of the USB B connector
This unit cannot be recognized or controlled by the PC/Mac that is connected via the USB B connector.
Does this unit operate properly on its own when it is not controlled via the USB B connector?
No
See the section on errors in the operating elements and LEDs.
Yes
Check that the driver for this unit has been installed on the PC/Mac.
Check that the MIXER mode of this unit is properly set as either XDJ-RR or MIDI Control.
Is this unit recognized by the PC/Mac?
No
A problem in the periphery of USB HUB IC (IC1603) or I.MX (IC701) USB communication line in the MAIN Assy is suspected.
Check the power supply to each IC. If there is no problem, replace the MAIN Assy.
Yes
Check and correct the settings of the application used on the PC/Mac.
(This unit operates properly.)

Confirmation of LAN

Confirm with peripheral device connected.

Connection between this unit and another device via LAN is not possible. (This unit cannot be recognized by rekordbox.)

→ Check that the LAN settings are properly performed both with this unit and the other device.
Note that LAN communication cannot be established unless rekordbox is started.
Check the peripheral circuit of and power supply to LAN PHY (IC1601).
If there is no problem, replace the MAIN Assy.

Confirmation of LCD backlight

The LCD backlight does not light up.

→ Is the voltage of BL_A normal? referring to "10.39 VOLTAGES."

Normal → Replace the LCD module.

Abnormal → Replace the MAIN Assy.

Confirmation of the LCD module

No display on the LCD.
Indications on the LCD are not normal.

→ Is it operating normally except the LCD module? (LED light up, USB recognition is possible etc.)

No → See the section on "Startup is not completed" when other than LCD is not working properly.

Yes → See the section on "Confirmation of LCD backlight".
Check power supply to the LCD module.
Check the voltages at Pins 3, 4, 5 and 21 of CN3201 in the LCDB Assy, referring to "10.39 VOLTAGES."

→ Is the voltage at each block normal?

No → Also check the voltage with the LCD module removed.
If the voltage becomes normal without the LCD module attached, replace the module.
When the system is not improved, replace the LCDB Assy.

Yes → Replace the MAIN Assy.
If it does not improve, replace the LCDB Assy.
If it still does not, replace the LCD module.

JOG uCom error

JOG uCom check became NG in the Test mode.

→ Press the EFFECT ON/OFF button and confirm whether JOG touch is responsive in Mode 5 of the Test mode.

→ Is the JOG touch of the each Decks responsive?

No → Replace the DECK PCB of the side that is not responsive.
DCK1 Assy or DCK2 Assy

If it does not improve, replace the UCOM Assy.

Yes → Replace the DCIN Assy.

Trouble with the operating elements or LEDs

[Confirmation work in advance]
Check whether LED / operation is OK.
Please refer to "6.1 TEST MODE" and check whether there are problems with LEDs/elements.
If there is a problem please repair the defective part. (See "Display trouble", "Operation trouble".)

Direct key, Direct LED

*For details on Matrix keys and Matrix LEDs, refer to "4.4 MATRIX INFORMATION".

■ **Direct key (EUP UCOM)**
LCDB Assy: Rotary selector
DCK1 Assy: CUE, ►/II (PLAY/PAUSE), JOG TOUCH, JOG_R, Performance 1 to 4, POWER SW
DCK2 Assy: CUE, ►/II (PLAY/PAUSE), JOG TOUCH, JOG_R, Performance 1 to 4, MASTER REC
CRVB Assy: CROSS FADER CURVE

■ **Direct A/D key (EUP UCOM)**
MXRB Assy: CH1 channel fader, CH2 channel fader
CRFD Assy: Crossfader
DCK1 Assy: TEMPO slider, MIC EQ HI, MIC EQ LOW
DCK2 Assy: TEMPO slider

■ **Direct LED (MAIN UCOM)**
LCDB Assy: BROWSE, TAG LIST, INFO, MENU, rekordbox, MIDI, USB1, USB2, QUANTIZE, LOAD1, LOAD2

■ **Direct LED (EUP UCOM)**
DCK2 Assy: MASTER REC

Some of the matrix keys (SW) do not function, and some of the LEDs cannot light.

→ Make sure that keys and LEDs that do not work are using the same GRID in the schematic diagram. (4.4 MATRIX INFORMATION)

→ Is the same grid used?

Yes →
- If the MIXER block is in failure
  MXRB Assy: IC5202
- If the CDJ block is in failure
  DCK1 Assy: IC4101
  DCK2 Assy: IC4701

Check the output of the applicable GRID form these parts.
If no problem, check the GRID line is not short circuit with GND. If the problem is found, replace the defective parts.

No →
See "No operation with keys (switches), No operation with slide switches" or "The LEDs do not light."

No operation with keys (switches), No operation with slide switches.

→ Check that current is conducted between the terminals of the switch when it is pressed. If current is not conducted, replace the switch. Check the line between the switch and the microcomputer.
If the line is OK, replace the microcomputer.
• UCOM Assy: IC3401

The rotary VRs are inoperable.
The rotary selector is inoperable.

Rotary selector
BROWSE ENCORDER

→ Is it a rotation operation that does not work?

No →
When push operation does not work, see "No operation with keys (switches), No operation with slide switches."

Yes →
Which volume/selector does not operate, either the direct A/D key or the multiplexer A/D key?

Direct A/D key →
Check that the resistance value of the line that is connected to ground and the microcomputer changes in accordance with turning of the VR. Check the connection line between the microcomputer and the VR.
If no problem is found, replace the microcomputers.
• UCOM Assy: IC3401

Multiplexer A/D key →
Check that the resistance values of the lines that are connected to GND and a microcomputer change in response to turning of the VR. Check the connection lines between the multiplexer ICs and rotary selectors/VRs. If there is no problem, replace the multiplexer IC.
• MXRB Assy: IC5203 or IC5204

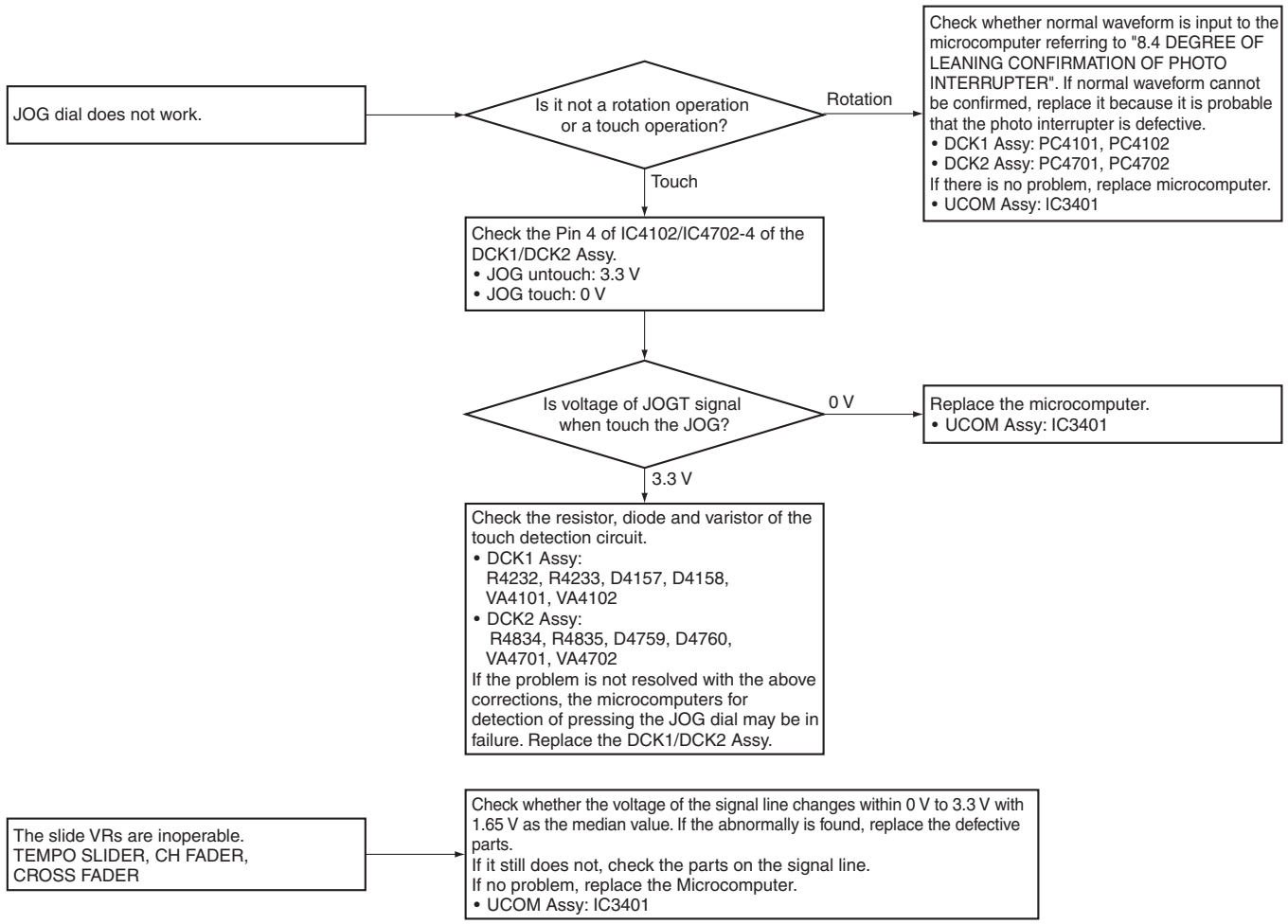
JOG dial does not work.
Is it not a rotation operation or a touch operation?
Rotation
Check whether normal waveform is input to the microcomputer referring to "8.4 DEGREE OF LEANING CONFIRMATION OF PHOTO INTERRUPTER". If normal waveform cannot be confirmed, replace it because it is probable that the photo interrupter is defective.
• DCK1 Assy: PC4101, PC4102
• DCK2 Assy: PC4701, PC4702
If there is no problem, replace microcomputer.
• UCOM Assy: IC3401
Touch
Check the Pin 4 of IC4102/IC4702-4 of the DCK1/DCK2 Assy.
• JOG untouch: 3.3 V
• JOG touch: 0 V
Is voltage of JOGT signal when touch the JOG?
0 V
Replace the microcomputer.
• UCOM Assy: IC3401
3.3 V
Check the resistor, diode and varistor of the touch detection circuit.
• DCK1 Assy:
R4232, R4233, D4157, D4158, VA4101, VA4102
• DCK2 Assy:
R4834, R4835, D4759, D4760, VA4701, VA4702
If the problem is not resolved with the above corrections, the microcomputers for detection of pressing the JOG dial may be in failure. Replace the DCK1/DCK2 Assy.
The slide VRs are inoperable.
TEMPO SLIDER, CH FADER,
CROSS FADER
Check whether the voltage of the signal line changes within 0 V to 3.3 V with 1.65 V as the median value. If the abnormally is found, replace the defective parts.
If it still does not, check the parts on the signal line.
If no problem, replace the Microcomputer.
• UCOM Assy: IC3401

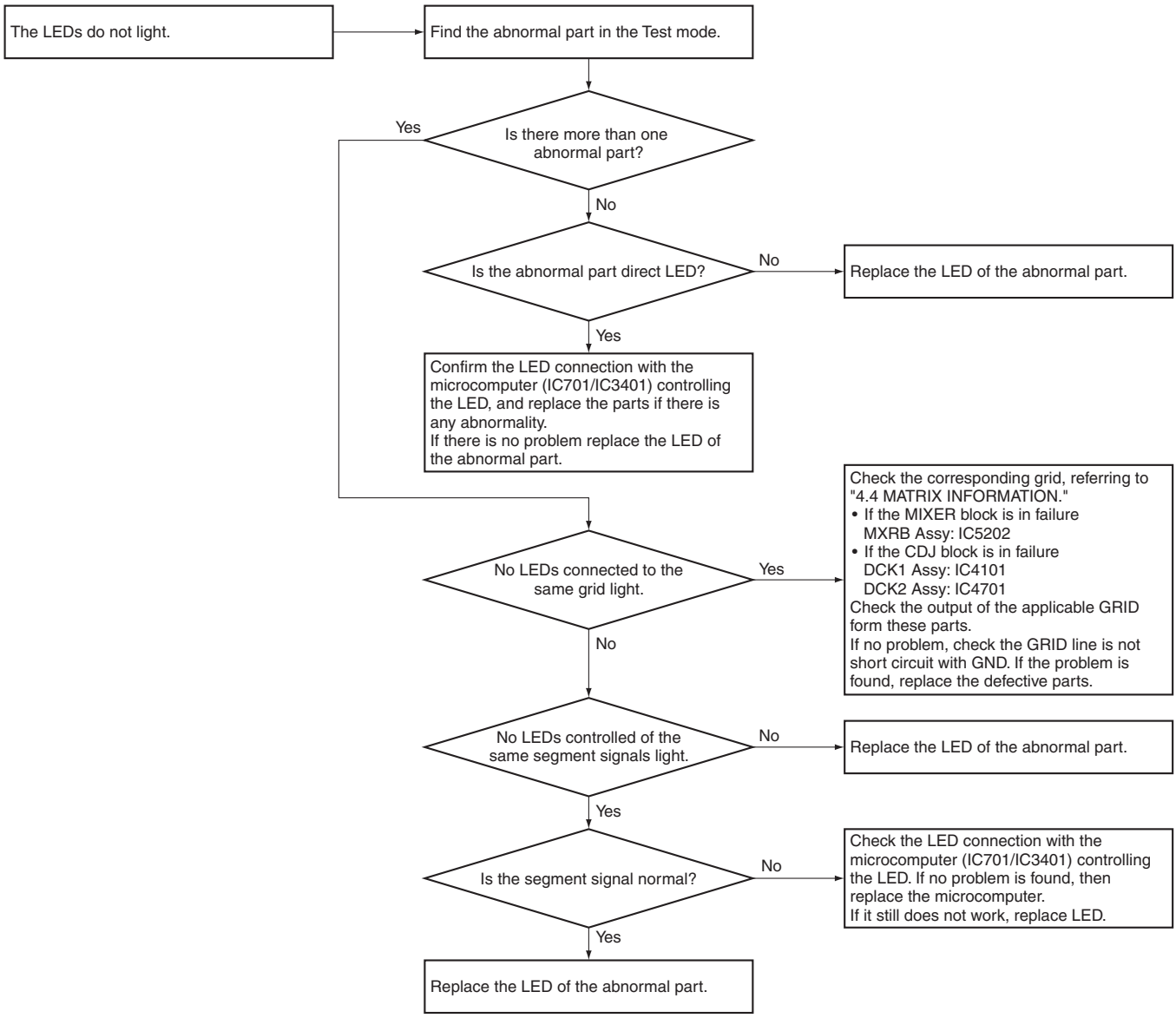
The LEDs do not light.
Find the abnormal part in the Test mode.
Is there more than one abnormal part?
Yes
No
Is the abnormal part direct LED?
No
Replace the LED of the abnormal part.
Yes
Confirm the LED connection with the microcomputer (IC701/IC3401) controlling the LED, and replace the parts if there is any abnormality.
If there is no problem replace the LED of the abnormal part.
No LEDs connected to the same grid light.
Yes
Check the corresponding grid, referring to "4.4 MATRIX INFORMATION."
• If the MIXER block is in failure
MXRB Assy: IC5202
• If the CDJ block is in failure
DCK1 Assy: IC4101
DCK2 Assy: IC4701
Check the output of the applicable GRID form these parts.
If no problem, check the GRID line is not short circuit with GND. If the problem is found, replace the defective parts.
No
No LEDs controlled of the same segment signals light.
No
Replace the LED of the abnormal part.
Yes
Is the segment signal normal?
No
Check the LED connection with the microcomputer (IC701/IC3401) controlling the LED. If no problem is found, then replace the microcomputer.
If it still does not work, replace LED.
Yes
Replace the LED of the abnormal part.

Trouble in the audio system

[Confirmation work in advance]

① It discriminates defective area in the input and output
Refer to "5.3 SIMPLIFIED DIAGNOSTIC PROCEDURE FOR AUDIO SIGNAL", divide which of input and output has defects.
※If all signal has defect, it has the defect on the power of audio, the clock of audio or the circuit near DSP.
And, refer to "10.40 WAVEFORMS" and check the waveform whether it is correct.

② It checks whether there is a problem with the display or the operation.
Refer to "6.1 TEST MODE", it checks whether there is a problem with the display or the operation.
If it has defect, repair the defective area. (Refer to flowchart about "Display trouble", "Operation trouble".)

[1] Error in output section

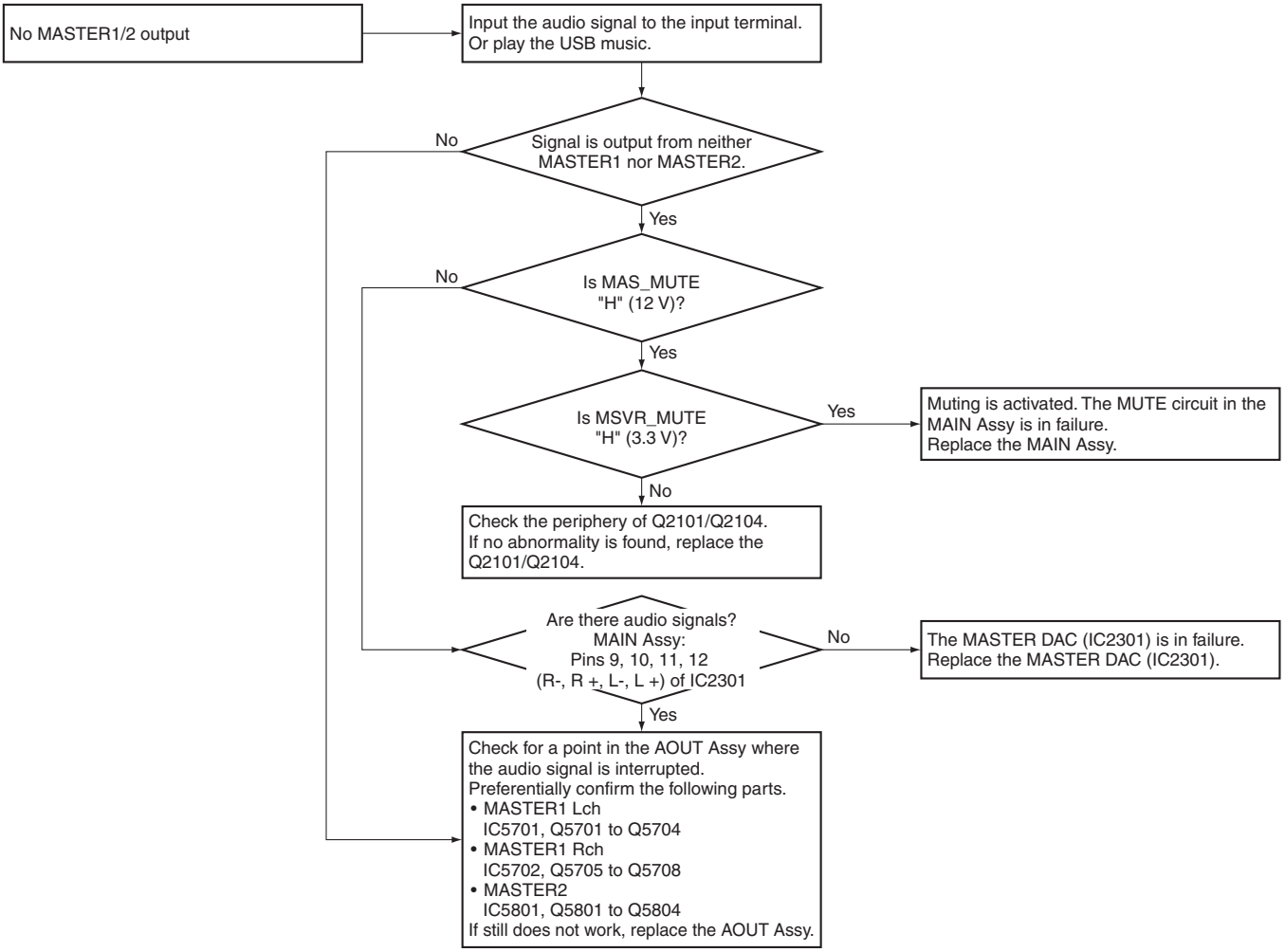

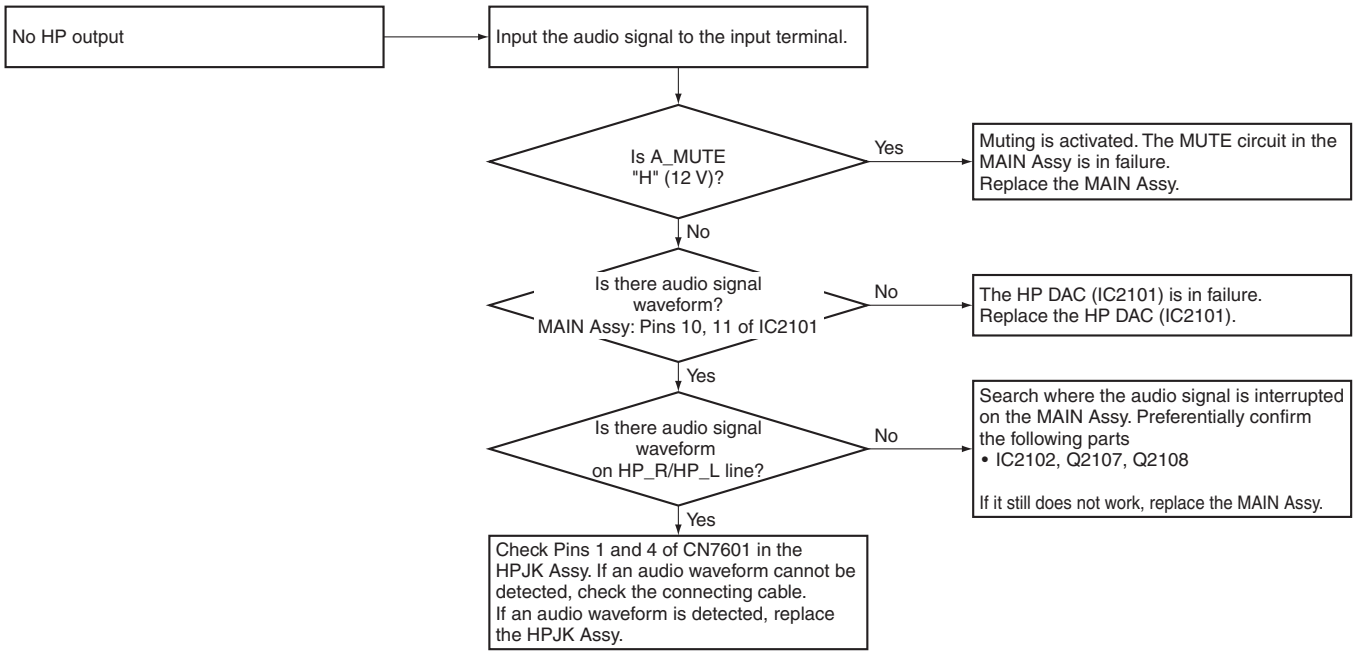

[2] Error in input section

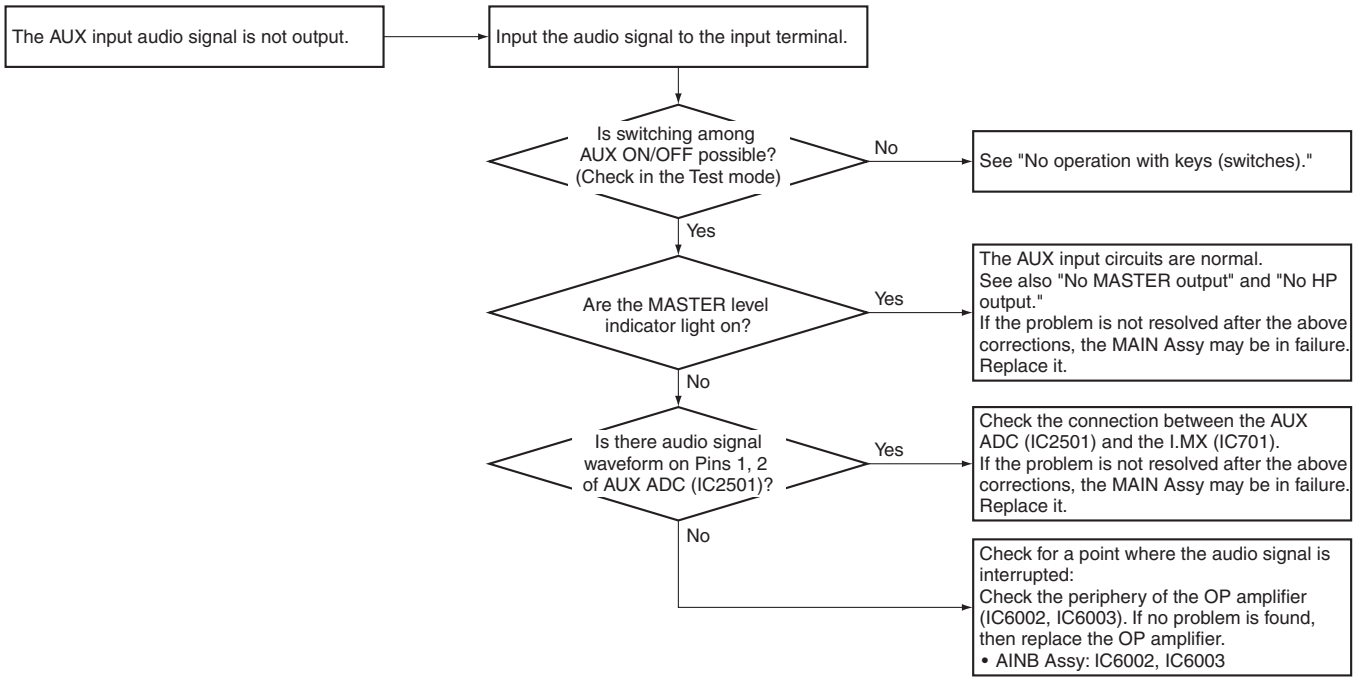

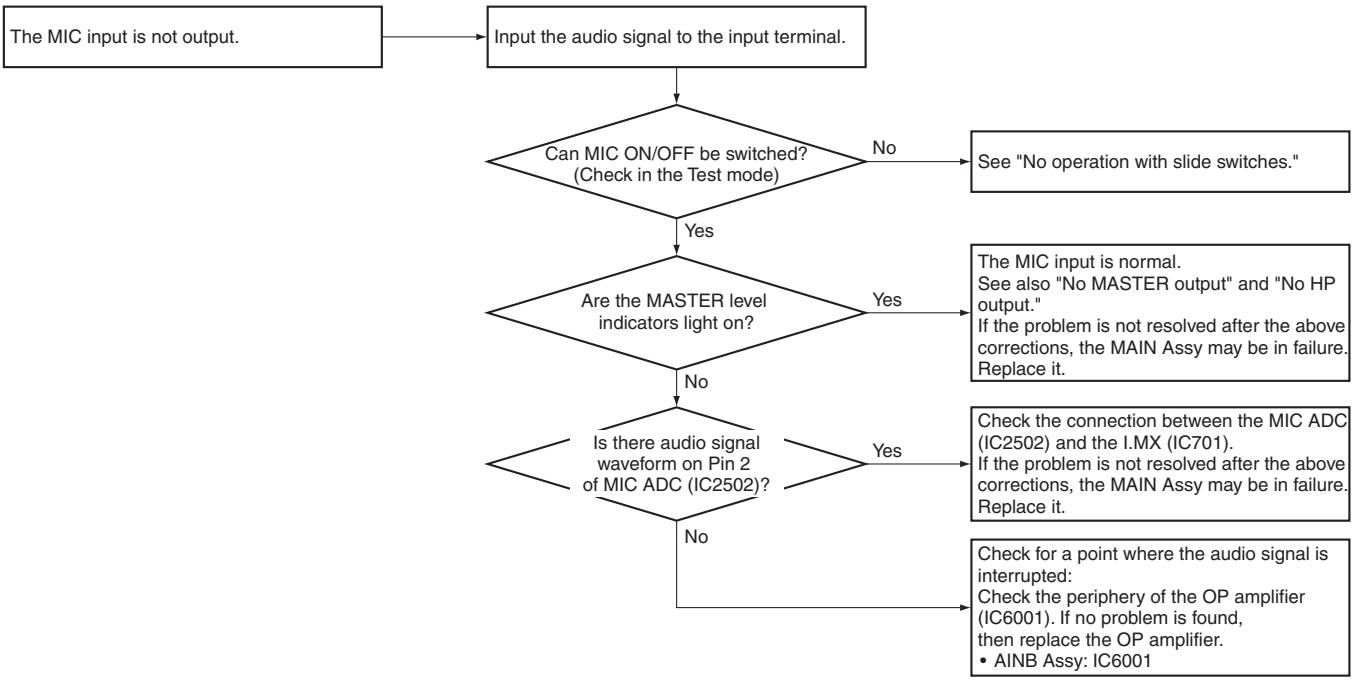
The MIC input is not output.
Input the audio signal to the input terminal.
Can MIC ON/OFF be switched? (Check in the Test mode)
No
See "No operation with slide switches."
Yes
Are the MASTER level indicators light on?
Yes
The MIC input is normal. See also "No MASTER output" and "No HP output." If the problem is not resolved after the above corrections, the MAIN Assy may be in failure. Replace it.
No
Is there audio signal waveform on Pin 2 of MIC ADC (IC2502)?
Yes
Check the connection between the MIC ADC (IC2502) and the I.MX (IC701). If the problem is not resolved after the above corrections, the MAIN Assy may be in failure. Replace it.
No
Check for a point where the audio signal is interrupted: Check the periphery of the OP amplifier (IC6001). If no problem is found, then replace the OP amplifier.
• AINB Assy: IC6001

5.3 SIMPLIFIED DIAGNOSTIC PROCEDURE FOR AUDIO SIGNAL

With the NOISE effect function provided with this unit, white noise generated by the main CPU is filtered then mixed with the audio signal of the assigned channel before being output.
With this function, simplified diagnostics for the audio signal blocks are possible.
Check the following:
· White noise is audible when the NOISE effect button is set to ON or OFF.
· White noise changes in response to changes in the cutoff frequency, volume, or sound quality of the NOISE effects.

If both phenomena can be confirmed, the block prior to the main CPU can be deemed being in failure.
If either phenomenon or neither phenomena can be confirmed, the main CPU, its periphery, or blocks subsequent to the main CPU can be deemed being in failure.

The operating procedure for the NOISE effect is indicated below.
① Press the [SOUND COLOR FX NOISE] button. (The NOISE effect is set for both CH1 and CH2.)
② Adjust the volume with the [TRIM] control of the channel you wish to check, the sound quality with the [EQ/ISO (HI, MID, LOW)] controls, or the cutoff frequency for the filter through which white noise is to be filtered with the [COLOR] control.
(For details, refer to "Using the sound color FX function" in the operating instructions.)

This diagnostic method is applicable to other DJ products equipped with the NOISE effect generator.

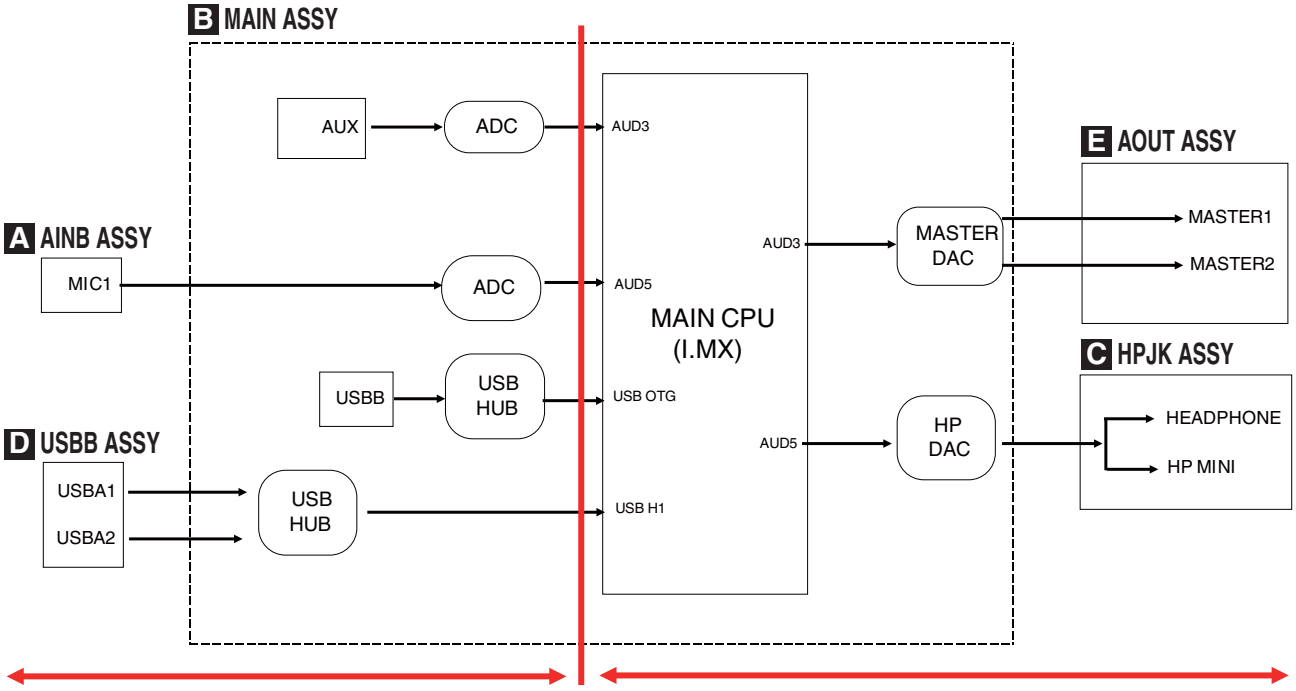

5.4 VOLTAGE MONITORING CIRCUIT

■ Voltage-Monitoring Circuit

This unit monitors the voltages of the main power-supply ICs, using the F_DET (FAULT_xDET) signal.
The F_DET signal level is high (+3.3 V) during normal operations. When the level becomes low (0 V), detect abnormality in the EUP UCOM (IC3401).

■ Product behavior when an error is generated

If power failure is detected with the F_DET signal (F-DET signal consists with the interval Low levels more than 50 ms), the EUP UCOM will stop supplying the V+12D/V+12L/V+12A power from DCIN Assy, setting the PWR_ON signal to low.
The EUP UCOM also informs of power failure with flashing of the MASTER_REC (red LED) button, by sending the STBY_LED signal:
As the V+12D/V+12L/V+12A power is stopped, the indications other than the MASTER_REC are light off and all the switches and VRs are disabled. When you let you return from a power supply abnormality detection state, perform drawing and inserting of the power cord.



■ Diagnostic procedure

Note: Each time before turning the unit ON, make sure that each power-supply IC is not short-circuited to GND.
If any voltage is abnormal, that error will be detected by the voltage-monitoring program after it is started after a usual startup of the unit. Then the V+12D/V+12L/V+12A power from DCIN Assy will be stopped.
Identify which power-supply IC is defective, by duplicate drawing and inserting of the power cord while monitoring each voltage with an oscilloscope. Check the value of each voltage immediately before stopping power supply.

■ Voltage-Monitoring Circuit Block diagram

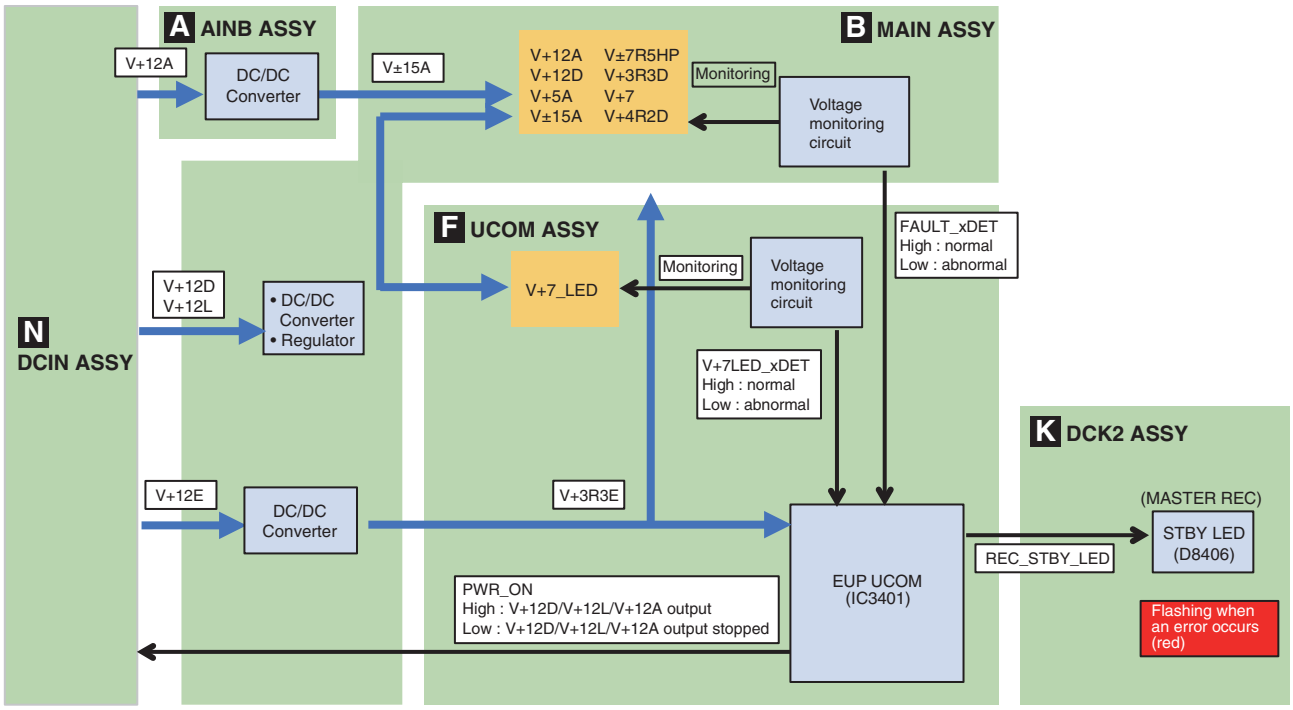

■ Voltage-Monitoring Circuit diagram

B MAIN ASSY

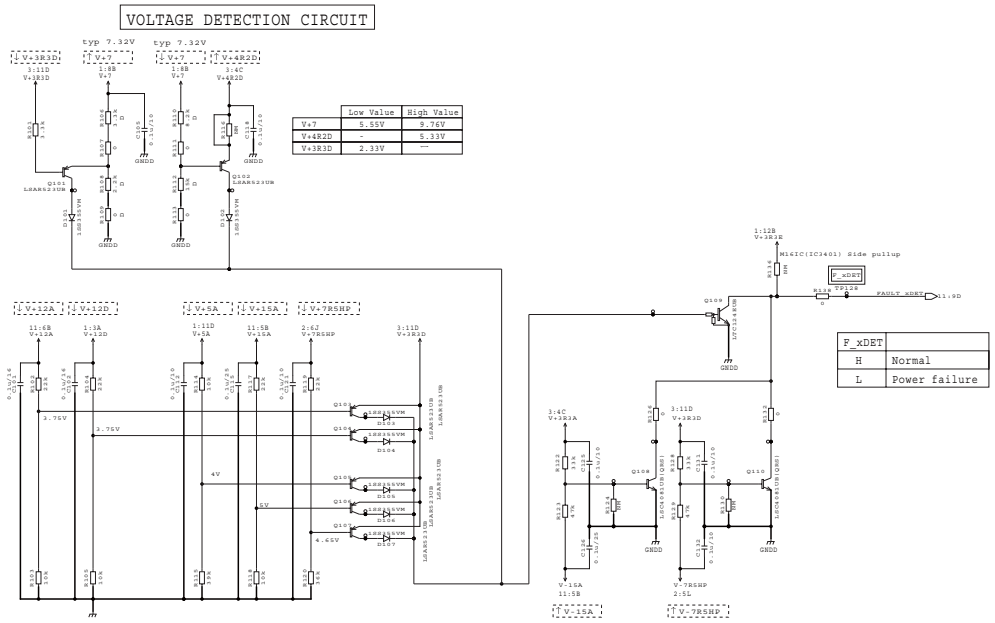

	Low Value	High Value
V+7	5.55V	9.76V
V+4R2D	-	5.35V
V+3R3D	2.33V	—

F_xDET	
H	Normal
L	Power failure

F UCOM ASSY

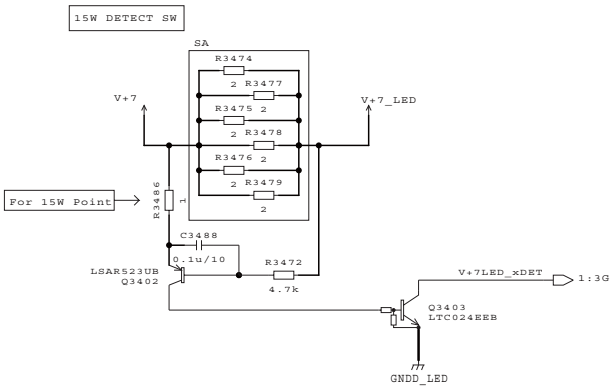

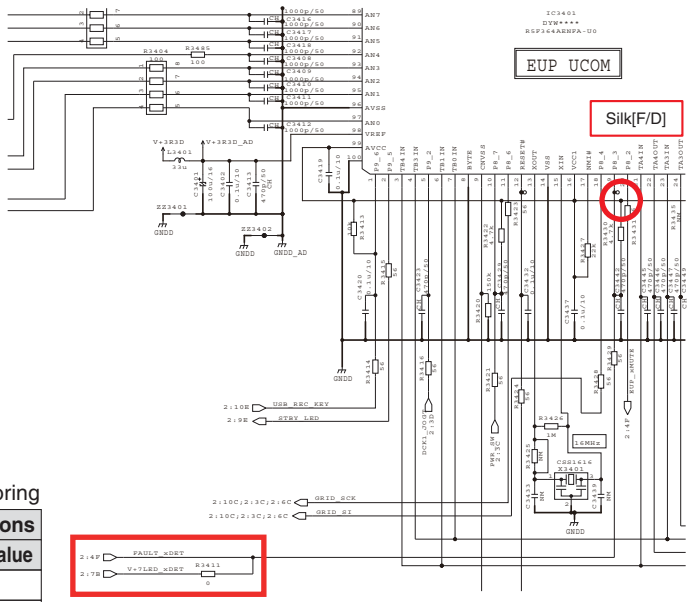

■ Voltage value of the voltage-monitoring section

※LED power supply only current monitoring

Power	Over voltage / Under voltage	Detection range in consideration of variations		
		Minimum value	Center value	Maximum value
V+12A	—	7.89 V	8.74 V	9.68 V
V+12D	—	7.89 V	8.74 V	9.68 V
V+5A	—	3.25 V	3.43 V	3.62 V
V+15A	—	7.89 V	8.74 V	9.68 V
V-15A	+	-3.84 V	-3.29 V	-2.80 V
V+7R5HP	—	4.10 V	4.40 V	4.73 V
V-7R5HP	+	-3.84 V	-3.29 V	-2.80 V
V+3R3D	—	2.16 V	2.33 V	2.50 V
V+7	+	8.97 V	9.76 V	10.59 V
	—	5.17 V	5.55 V	5.99 V
V+4R2D	+	4.97 V	5.16 V	5.35 V
V+7_LED	current limit			1.8 A

5.5 ERROR CODE

Error code	Display word	Contents	Remarks
E-7206	AUTH CHIP ERROR	Apple authentication chip does not work normally.	
E-8302	CANNOT PLAY TRACK	Abnormalities occurred during playback.	
E-8304	UNSUPPORTED FILE FORMAT	Decoding error occurred.	
E-8305	UNSUPPORTED FILE FORMAT	This format is not supported.	
E-8306	NO FILE	The registered file does not exist.	
E-8307	• DEVICE NO RESPONSE. • UNSUPPORTED DEVICE. • HUBS ARE NOT SUPPORTED.	• Device no response. • Unsupported device. • Hubs are not supported.	USB ACCESS ERROR An unsupported USB device is connected. Either of the three error types will be displayed.
E-8309	LINK ACCESS ERROR	Link access failed due to timeout errors.	

5.6 IC INFORMATION

DYW2135 (UCOM ASSY: IC3401)

EUP UCOM

• Pin Function

No.	Pin Name	Net Name	I/O	Function	No.	Pin Name	Net Name	I/O	Function
1	P9_6	USB_REC_KEY	I	Direct LED input	51	P4_3	DCK2_KEY1	I	Matrix KEY input
2	P9_5	STBY_LED	O	Direct LED output	52	P4_2	DCK2_LED2	O	LED segment signal
3	TB4IN	DCK1_JOG_R1	I	JOG rotate signal input	53	P4_1	DCK2_KEY2	I	Matrix KEY input
4	TB3IN	DCK2_JOG_R1	I	JOG rotate signal input	54	P4_0	DCK2_LED1	O	LED segment signal
5	P9_2	DCK1_JOGT	I	JOG touch signal input	55	P3_7	DCK2_KEY3	I	Matrix KEY input
6	TB1IN	DCK1_JOG_R1	I	JOG rotate signal input	56	P3_6	DCK2_LED0	O	LED segment signal
7	TB0IN	DCK2_JOG_R1	I	JOG rotate signal input	57	P3_5	DCK2_KEY0	I	Matrix KEY input
8	BYTE	BYTE	I	GNDD	58	P3_4	MXR_LED_xG	O	Mixer LED control signal output
9	CNVSS	CNVSS	I	CNVSS	59	P3_3	MXR_LED_RCK	O	Mixer LED control signal output
10	P8_7	PWR_SW	I	Power SW signal input	60	P3_2	MXR_KEY1	I	Matrix KEY input
11	P8_6	GRID_SCK	O	Grid signal generate	61	P3_1	MXR_KEY0	I	Matrix KEY input
12	RESET#	EUP_RST	I	EUP UCOM reset input	62	VCC2	V+3R3D	I	VCC2
13	XOUT	XOUT	O	XOUT	63	P3_0	AD_SEL_A	O	Analog SW select signal output
14	VSS	GNDD	I	VSS	64	VSS2	GNDD	I	VSS2
15	XIN	XIN	I	XIN	65	P2_7	AD_SEL_B	O	Analog SW select signal output
16	VCC1	V+3R3E	I	VCC1	66	P2_6	DCK1_PAD2	I	Direct KEY input
17	NMI#	NMI	I	NMI#	67	P2_5	DCK1_PAD1	I	Direct KEY input
18	P8_4	GRID_SI	O	Grid signal generate	68	P2_4	DCK1_PAD3	I	Direct KEY input
19	P8_3	FAULT_xDET	I	Power monitoring signal input	69	P2_3	DCK1_PAD4	I	Direct KEY input
20	P8_2	EUP_xMUTE	O	Audio MUTE signal output	70	P2_2	DCK1_PLAY	I	Direct KEY input
21	TA4IN	DCK1_JOG_R1	I	JOG rotate signal input	71	AN2_1	DCK2_ADCT	I	TEMPO SLIDER signal
22	TA4OUT	DCK1_JOG_R0	I	JOG rotate signal input	72	AN2_0	DCK2_ADIN	I	TEMPO SLIDER signal
23	TA3IN	DCK2_JOG_R1	I	JOG rotate signal input	73	P1_7	DCK1_CUE	I	Direct KEY input
24	TA3OUT	DCK2_JOG_R0	I	JOG rotate signal input	74	P1_6	DCK1_KEY1	I	Matrix KEY input
25	P7_5	ACOFF_xDET	I	Power monitoring signal input	75	P1_5	DCK1_LED2	O	LED segment signal
26	P7_4	PWR_ON	O	SW power supply startup signal output	76	P1_4	DCK1_KEY2	I	Matrix KEY input
27	-	-	-	-	77	P1_3	DCK1_LED1	O	LED segment signal
28	P7_2	EUP_CONT	I	Between I.MX6 communication	78	P1_2	DCK1_KEY3	I	Matrix KEY input
29	-	-	-	-	79	P1_1	DCK1_LED0	O	LED segment signal
30	-	-	-	-	80	P1_0	DCK1_KEY0	I	Matrix KEY input
31	P6_7	EUP_REQ	O	Between I.MX6 communication	81	-	-	-	-
32	P6_6	EUP_CS	I	Between I.MX6 communication	82	AN0_6	LCD_ADKEY2	I	Direct AD key input
33	P6_5	EUP_WRITE	O	Between I.MX6 communication	83	AN0_5	LCD_ADKEY1	I	Direct AD key input
34	P6_4	EUP_IMX_RST	O	i.MX RST signal output	84	AN0_4	LCD_ADKEY0	I	Direct AD key input
35	TXD0	EUP_MISO	O	Between I.MX6 communication	85	AN0_3	CRFD_CRV_AD	I	CRFD CURVE signal input
36	RXD0	EUP_MOSI	I	Between I.MX6 communication	86	AN0_2	CHFD2_AD	I	Direct AD signal input
37	CLK0	EUP_SCLK	I	Between I.MX6 communication	87	AN0_1	CHFD1_AD	I	Direct AD signal input
38	-	-	-	-	88	AN0_0	MXR_AD0	I	Analog SW signal input
39	P5_7	BROWSE_ENC1	I	BROWSE knob rotate signal input	89	AN7	MXR_AD3	I	Analog SW signal input
40	P5_6	BROWSE_ENC2	I	BROWSE knob rotate signal input	90	AN6	MXR_AD1	I	Analog SW signal input
41	-	-	-	-	91	AN5	MXR_AD2	I	Analog SW signal input
42	P5_4	DCK2_PAD2	I	Direct KEY input	92	AN4	CRFD_AD	I	Direct AD signal input
43	P5_3	DCK2_PAD1	I	Direct KEY input	93	AN3	DCK1_ADIN	I	Direct AD signal input
44	P5_2	DCK2_PAD3	I	Direct KEY input	94	AN2	DCK1_ADCT	I	Direct AD signal input
45	P5_1	DCK2_PAD4	I	Direct KEY input	95	AN1	MIC_EQ_HI	I	Direct AD signal input
46	P5_0	DCK2_PLAY	I	Direct KEY input	96	AVSS	GND_AD	I	AVSS
47	TXD7	MXR_LED_SI	O	Mixer LED control signal output	97	AN0	MIC_EQ_LOW	I	Direct AD signal input
48	P4_6	DCK2_CUE	I	Direct KEY input	98	VREF	V+3R3_AD	I	VREF
49	CLK7	MXR_LED_SCK	O	Mixer LED control signal output	99	AVCC	V+3R3E	I	AVCC
50	P4_4	DCK2_JOGT	I	JOG touch signal input	100	-	-	-	-

6. SERVICE MODE
6.1 TEST MODE

Description of Test Modes

The Following eight test modes are provided for this unit:
① Mode 1: Check of the versions, destination (language), MAC address, Serial number, Update port check, Operation check and JOG uComs
② Mode 2: All LEDs and LCDs light off
③ Mode 3: All LEDs and LCDs light on
④ Mode 4: LCD patterns
⑤ Mode 5: Confirmation of individual keys and LEDs
⑥ Mode 6: Confirmation of individual switches
⑦ Mode 7: Confirmation of the values of the rotary variable controls and sliders
⑧ Mode 8: Confirmation of the Rotary selector

■ How to Enter Test Mode

While holding the DECK 1 MEMORY and DECK 1 TEMPO RANGE buttons pressed, press the ⏻ switch to turn the unit on. (Be sure to hold the ⏻ switch pressed until the unit starts up.)
Start up the unit in Mode 1 of Test mode.

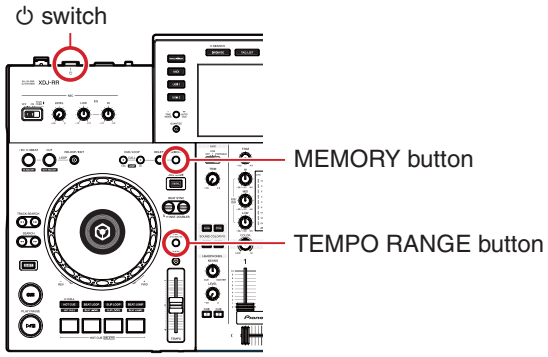

■ How to Change Test Modes

- To change Test modes, turn the Rotary selector clockwise or counterclockwise.
- To shift from Mode 8 to Mode 1 or from Mode 1 to Mode 9, press the Rotary selector. Then, Test modes can be changed again with a turn of the Rotary selector.

Mode 1 ↔ Mode 2 ↔ Mode 3 ↔ Mode 4 ↔ Mode 5 ↔ Mode 6 ↔ Mode 7 ↔ Mode 8

Test mode Contents

① Mode 1: Check of the versions, destination (language), MAC address, serial number, Update port check, Operation check and JOG uComs

- Check the the versions, destination (language), MAC address, serial number, Update port check, Operation check and JOG uComs

- Update port check
  - While checking, "Checking" is displayed.
  - When there is no problem with all ports, "OK" is displayed.
    If some problem is found, "NG" display and the port name that has some problems are displayed.
    The ports to be checked are Eup_Req, Eup_Write, and Eup_Cont.

- The mode change is not possible when the checking process and NG display.
  When NG display indication, press the "EFFECT ON/OFF " button, it will be able to operate.

- Operation check
  - The "END" display are displayed when the "END" display were displayed in all check items in Mode 5 to Mode 8.
  - When the test mode is end, "END" display is disappeared.

```
VERSION INFORMATION
    SYSTEM          Ver.1.00
    EUP             Ver.1.00
    APL             Rev.2000
    KERNEL          Rev.2001

    LANGUAGE        ENGLISH
    MAC_ADDR        00:00:00:00:00:00
    MAC_ADDR(LAN)   00:00:00:00:00:00
    SERIAL          000000000000
    UPDATE PORT     OK
    OPERATION CHEC  END
```

- JOG uCom check
  - If the JOG uCom is in failure, an error message will be displayed; if it is OK, no message will be displayed.
  - If NG, the mode change is not possible.
    Press the "EFFECT ON/OFF " button, it will be able to operate.
    Correspondence in case of NG
    Refer to "JOG uCom error" in "5.2 TROUBLESHOOTING".

```
VERSION INFORMATION
    SYSTEM          Ver.1.00
    EUP             Ver.1.00
    APL             Rev.2000
    KERNEL          Rev.2001

    LANGUAGE        ENGLISH
    MAC_ADDR        00:00:00:00:00:00
    MAC_ADDR(LAN)   00:00:00:00:00:00
    SERIAL          000000000000
    UPDATE PORT     OK
    OPERATION CHECK
【CH1】JOG uCom ERROR!!     【CH2】JOG uCom ERROR!!
```

② Mode 2: All LEDs and LCDs light off

- After this mode is entered, then all indications on the LCDs will disappear and the LEDs will go dark or dim.



- The below button's LED cannot be turned off completely due to specification.
  rekordbox, MIDI, USB1, USB2, Browse, TAGLIST, INFO, MENU

③ Mode 3: All LEDs and LCDs light on (Background color: white)



④ Mode 4: LCD patterns

- Each time the rotary selector is pressed, the LCD patterns change from color, black, then white, in that order.
  When the BACK button is pressed, the screen returns to that shown below.



⑤ Mode 5: Confirmation of individual keys and LEDs

- When this mode is entered, when a key is pressed, the corresponding LED will light.
  For details on correspondence between the keys and LEDs, see "Table of keys and corresponding LEDs to be light on in the mode for confirmation of individual keys."



- When all elements are operated, "END" display are displayed as shown in the above figure.
  The operation history will remain until the test mode ends.

- The CH 1 channel level indicator will move up or down in response to upward or downward movement of CH 1 Channel Fader.
- The CH 2 channel level indicator will move up or down in response to upward or downward movement of CH 2 Channel Fader.
- The master level indicator will move up or down in response to leftward or rightward movement of the crossfader.

Table of keys and corresponding LEDs to be light on in the mode for confirmation of individual keys

Operating buttons	LCD display text	Color of self lighting button	Others lighting button
DECK 1			
►/II (PLAY/PAUSE)	CH1 Play/Pause	green	
CUE	CH1 CUE	amber	
SHIFT	CH1 Shift	-----	RELOOP
TRACK SEARCH I◄◄	CH1 TrackRev	-----	LOOP IN
TRACK SEARCH ►►I	CH1 TrackFwd	-----	LOOP OUT
SEARCH ◄◄	CH1 SearchRev	-----	LOOP IN
SEARCH ►►	CH1 SearchFwd	-----	LOOP OUT
LOOP IN/4BEAT (IN ADJUST)	CH1 LoopIn	amber	
LOOP OUT (OUT ADJUST)	CH1 LoopOut	amber	
RELOOP/EXIT	CH1 Reloop	amber	
CUE/LOOP CALL ◄	CH1 CallPrev	-----	JOG MODE (VINYL)
CUE/LOOP CALL ►	CH1 CallNext	-----	BEAT SYNC SYNC
DELETE	CH1 CueDelete	-----	BEAT SYNC MASTER
MEMORY	CH1 CueMemory	-----	MASTER TEMPO
BEAT SYNC SYNC	CH1 Sync	white	
BEAT SYNC MASTER	CH1 Master	amber	
JOG MODE (VINYL)	CH1 Vinyl	blue	
JOG (TOUCH)	CH1 JogTouch	-----	JOG MODE (VINYL)
JOG ROTATE FWD	CH1 JogTouch	-----	LOOP OUT
JOG ROTATE REV	CH1 JogTouch	-----	LOOP IN
TEMPO RANGE	CH1 TempoRange	-----	BEAT SYNC MASTER
MASTER TEMPO	CH1 MasterTempo	red	
HOT CUE (CALL)	CH1 HotCue	green	
BEAT LOOP	CH1 AutoBeatLoop	green	
SLIP LOOP	CH1 SlipLoop	green	
BEAT JUMP	CH1 BeatJump	green	
Performance 1	CH1 Pad1	blue	
Performance 2	CH1 Pad2	blue	
Performance 3	CH1 Pad3	blue	
Performance 4	CH1 Pad4	blue	
DECK 2			
►/II (PLAY/PAUSE)	CH2 Play/Pause	green	
CUE	CH2 CUE	amber	
SHIFT	CH2 Shift	-----	RELOOP
TRACK SEARCH I◄◄	CH2 TrackRev	-----	LOOP IN
TRACK SEARCH ►►I	CH2 TrackFwd	-----	LOOP OUT
SEARCH ◄◄	CH2 SearchRev	-----	LOOP IN
SEARCH ►►	CH2 SearchFwd	-----	LOOP OUT
LOOP IN/4BEAT (IN ADJUST)	CH2 LoopIn	amber	
LOOP OUT (OUT ADJUST)	CH2 LoopOut	amber	
RELOOP/EXIT	CH2 Reloop	amber	
CUE/LOOP CALL ◄	CH2 CallPrev	-----	JOG MODE (VINYL)
CUE/LOOP CALL ►	CH2 CallNext	-----	BEAT SYNC SYNC
DELETE	CH2 CueDelete	-----	BEAT SYNC MASTER
MEMORY	CH2 CueMemory	-----	MASTER TEMPO
BEAT SYNC SYNC	CH2 Sync	white	
BEAT SYNC MASTER	CH2 Master	amber	
JOG MODE (VINYL)	CH2 Vinyl	blue	
JOG (TOUCH)	CH2 JogTouch	-----	JOG MODE (VINYL)
JOG ROTATE FWD	CH2 JogTouch	-----	LOOP OUT
JOG ROTATE REV	CH2 JogTouch	-----	LOOP IN
TEMPO RANGE	CH2 TempoRange	-----	BEAT SYNC MASTER
MASTER TEMPO	CH2 MasterTempo	red	
HOT CUE (CALL)	CH2 HotCue	green	
BEAT LOOP	CH2 AutoBeatLoop	green	
SLIP LOOP	CH2 SlipLoop	green	
BEAT JUMP	CH2 BeatJump	green	
Performance 1	CH2 Pad1	blue	
Performance 2	CH2 Pad2	blue	
Performance 3	CH2 Pad3	blue	
Performance 4	CH2 Pad4	blue	

Operating buttons	LCD display text	Color of self lighting button	Others lighting button
Common			
rekordbox	Media RB	white	
MIDI	Media PC	amber	
USB1	Media USB1	green	
USB2	Media USB2	green	
BROWSE (SEARCH)	Browse	green	
TAGLIST	TagList	green	
INFO	Info	green	
MENU (UTILITY)	Menu	green	
QUANTIZE	Quantize	red	
TIME MODE (AUTO CUE)	TimeMode/ACue	-----	Mic Indicator
BACK	Back	-----	BROWSE
TAG TRACK/REMOVE	TagTrack	-----	TAGLIST
DECK1/2	Deck Select	-----	MENU
ROTALY SELECTOR (PUSH)	RotalySelector		INFO
LOAD1	CH1 Load	white	
LOAD2	CH2 Load	white	
USB1 STOP	CH1 UsbStop	-----	USB1 Stop Indicator
USB2 STOP	CH2 UsbStop	-----	USB2 Stop Indicator
MASTER REC (WAKE UP)	USB REC	red	
TRACK MARK	TrackMark	-----	MASTER REC
Mixer			
SOUND COLOR FX DUB ECHO	CfxDubEcho	white	
SOUND COLOR FX PITCH	CfxPitch	white	
SOUND COLOR FX NOISE	CfxNoise	white	
SOUND COLOR FX FILTER	CfxFilter	white	
CUE CH1	CH1 HeadphoneCueCh	amber	
CUE CH2	CH2 HeadphoneCueCh	amber	
BFX ON/OFF	EffectOnOff	blue	
BEAT ►	BeatNext	-----	CLIP Indicator
BEAT ◄	BeatPrev	-----	BFX ON/OFF Indicator
Channel fader 1	-----	-----	LEVEL METER CH1
Channel fader 2	-----	-----	LEVEL METER CH2
Crossfader	-----	-----	LEVEL METER MASTER

⑥ Mode 6: Confirmation of individual switches

- When this mode is entered, "SW TEST" is displayed. The set position of each switch is indicated on the LCD.
- When EFFECT SELECT, AUX, FADER CURVE, MIC and CH SELECT are operated, "END" display are displayed as shown in the below figure.
- The operation history will remain until the test mode ends.



Operation switch		LCD indication	Remarks
BEAT EFFECTS selector switch	ECHO	ECHO	
	REVERB	REVERB	
	FLANGER	FLANGER	
Effect channel selector switch	1	1	
	2	2	
	MASTER	MASTER	
AUX selector switch	OFF	OFF	
	LINE	LINE	
	PORTABLE	PORTABLE	
CROSS FADER CURVE (crossfader curve selector switch)	THRU	LEFT	
	⌅	CENTER	
	⌅	RIGHT	
MIC (OFF, ON, TALKOVER) selector switch	OFF	OFF	
	ON	ON	
	TALKOVER	TALKOVER	

⑦ Mode 7: Confirmation of the values of the rotary variable controls and sliders

- The value for each VR or slider that is operated will be indicated.
- When CH1, MIC EQ HI and CH2 are operated, "END" display are displayed as shown in the below figure.
- The operation history will remain until the test mode ends.



Operation volume	LCD indication	Remarks
CH1 TRIM	CH1 TRIM XXX	XXX stands for 000–3FF in hexadecimal notation.
CH1 EQ/ISO (HI)	CH1 HIGH XXX	
CH1 EQ/ISO (MID)	CH1 MID XXX	
CH1 EQ/ISO (LOW)	CH1 LOW XXX	
CH1 COLOR	CH1 COLOR XXX	XXX stands for 000–3FC in hexadecimal notation.
CH1 Channel fader	CH1 FADER XXX	XXX stands for 000–3FF in hexadecimal notation.
CH1 TEMPO slider	CH1 TEMPO XXX	XXX stands for 000–3FF0 in hexadecimal notation.
CH2 TRIM	CH2 TRIM XXX	XXX stands for 000–3FF in hexadecimal notation.
CH2 EQ/ISO (HI)	CH2 HIGH XXX	
CH2 EQ/ISO (MID)	CH2 MID XXX	
CH2 EQ/ISO (LOW)	CH2 LOW XXX	
CH2 COLOR	CH2 COLOR XXX	XXX stands for 000–3FC in hexadecimal notation.
CH2 Channel fader	CH2 FADER XXX	XXX stands for 000–3FF in hexadecimal notation.
CH2 TEMPO slider	CH2 TEMPO XXX	XXX stands for 000–3FF0 in hexadecimal notation.
MIC EQ (HI)	MIC EQ HI XXX	The value is displayed in the 2nd row of the left column of the LCD. XXX stands for 000–3FF in hexadecimal notation.
MIC EQ (LOW)	MIC EQ LOW XXX	
HEADPHONES MIXING	HP MIXING XXX	
HEADPHONES LEVEL	HP LEVEL XXX	
AUX TRIM	AUX TRIM XXX	
Crossfader	CROSS FADER XXX	
LEVEL/DEPTH	LEVEL DEPTH XXX	
MASTER LEVEL	MASTER LEVEL XXX	

⑧ Mode 8: Confirmation of the Rotary selector

- The value will increase if a rotary selector is turned clockwise and decrease if it is turned counterclockwise.
- If the value reaches FF while a rotary selector is turned clockwise and it is then further turned, the value will return to 00 then continue to increase. If the value reaches 00 while a rotary selector is turned counterclockwise and it is then further turned, the value will return to FF then continue to decrease.
- When the rotary selector are operated, "END" display are displayed as shown in the below figure.
- The operation history will remain until the test mode ends.



Operation rotary selector	LCD indication	Remarks
Rotary selector	SELECTOR XX	XX stands for 00–FF in hexadecimal notation.

How to Reset to the Factory Default Settings

The operation by the main body button

While holding the DECK 1 DELETE and DECK1 TEMPO RANGE buttons pressed, press the ⏻ switch to turn on the unit.
(Be sure to hold the ⏻ switch pressed until the unit starts up.)

※ The language setting will not be reset.

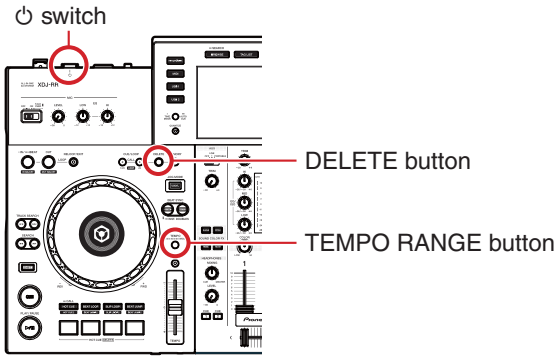

The confirmation mode about the installation of Photo interrupter

While holding the DECK 2 SHIFT and DECK2 LOOP OUT buttons pressed, press the ⏻ switch to turn on the unit.
(Be sure to hold the ⏻ switch pressed until the unit starts up.)

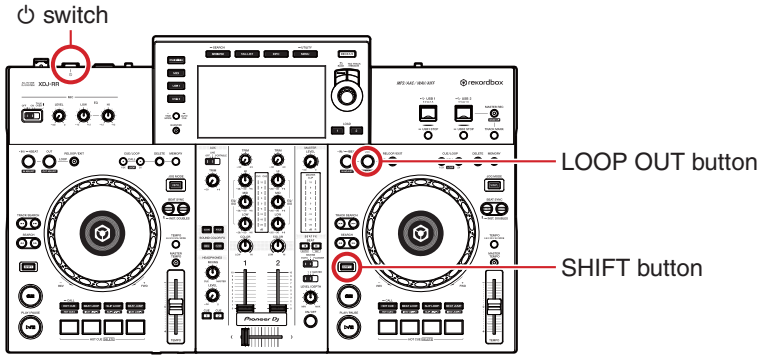

The LEDs that light on in confirmation mode

PAD1 and PAD3 on DECK1, and PAD2 and PAD4 on DECK2 will light on.
The button of the current measurement mode will light on.
The other buttons of DECK area and Mixer area will light off.

Change of the measurement speed

Press the button of the mode you want to measure.
After change, the pressed button will light on.

Mode	Corresponding button
The measurement mode in 20x speed	HOT CUE button
The measurement mode in 15x speed	BEAT LOOP button
The measurement mode in 10x speed	SLIP LOOP button
The measurement mode in 5x speed	BEAT JUMP button

6.2 ABOUT THE DEVICE

Device Name	Function	Part No.	Reference No.	Assy
I.MX6 /Application Processor	Main CPU. Display control, USB host/Device control, LAN communication control, Device microcomputer control, Audio processing, Device/LED control.	MCIMX6D6AVT10AD-K	IC701	MAIN Assy
SDRAM (DDR3 32bit 2Gb x2)	DRAM for I.MX6.	H5TQ2G63GFR-RDC-K	IC702, IC703	MAIN Assy
NAND Flash (2Gbit)	Storing programs for I.MX6.	DYW∗∗∗∗ (NSP)	IC901	MAIN Assy
PMIC for I.MX6	Power supply generation, Power supply management IC for I.MX6.	MMPF0100F0AEP-K	IC501	MAIN Assy
USBB HUB	Divide a USB signal into two of USB B for USBB communication and LAN conversion.	USB2512B-AEZG-TR	IC1603	MAIN Assy
USB-LAN Conversion	Convert USB communication from USB HUB to LAN communication.	RTL8152B-VB-CG	IC1601	MAIN Assy
LAN PHY	Transceiver IC that connects LAN communication LAN converted by USB-LAN Conversion with I. MK.	RTL8201F-VB-CG	IC1602	MAIN Assy
USBA HUB	Connect two USB A terminals and I. MX6.	USB2512B-AEZG-TR	IC1604	MAIN Assy
High-side SW IC	USB current control IC. Limit the supply electric current to USB A terminal.	TPS2557DRB	IC305, IC306	MAIN Assy
AUDIO DAC	MASTER DAC.	AK4382AVT	IC2301	MAIN Assy
	Headphone DAC.	AK4384ET	IC2101	MAIN Assy
AUDIO ADC	ADC for AUX and MIC.	AK5358AET	IC2501, IC2502	MAIN Assy
7 inch TFT LCD	7 inches liquid crystal modules.	CWX4352	Connect to CN5201 on LCDB Assy.	
LCD Backlight IC	Backlight control IC.	IS31BL3555-ZLS4	IC302	MAIN Assy
LVDS Receiver IC	Convert LVDS signal for liquid crystal from I.MX6 into RGB signal.	BU90R104	IC3001	LCDB Assy
EUP UCOM	Standby control. elements and LEDs control.	DYW∗∗∗∗	IC3401	UCOM Assy

Note on DYW∗∗∗∗
The "∗∗∗∗" part of the part number changes each time the firmware is updated.

7. DISASSEMBLY

Note:
Even if the unit shown in the photos and illustrations in this manual may differ from your product, the procedures described here are common.

Knobs and Volumes Location

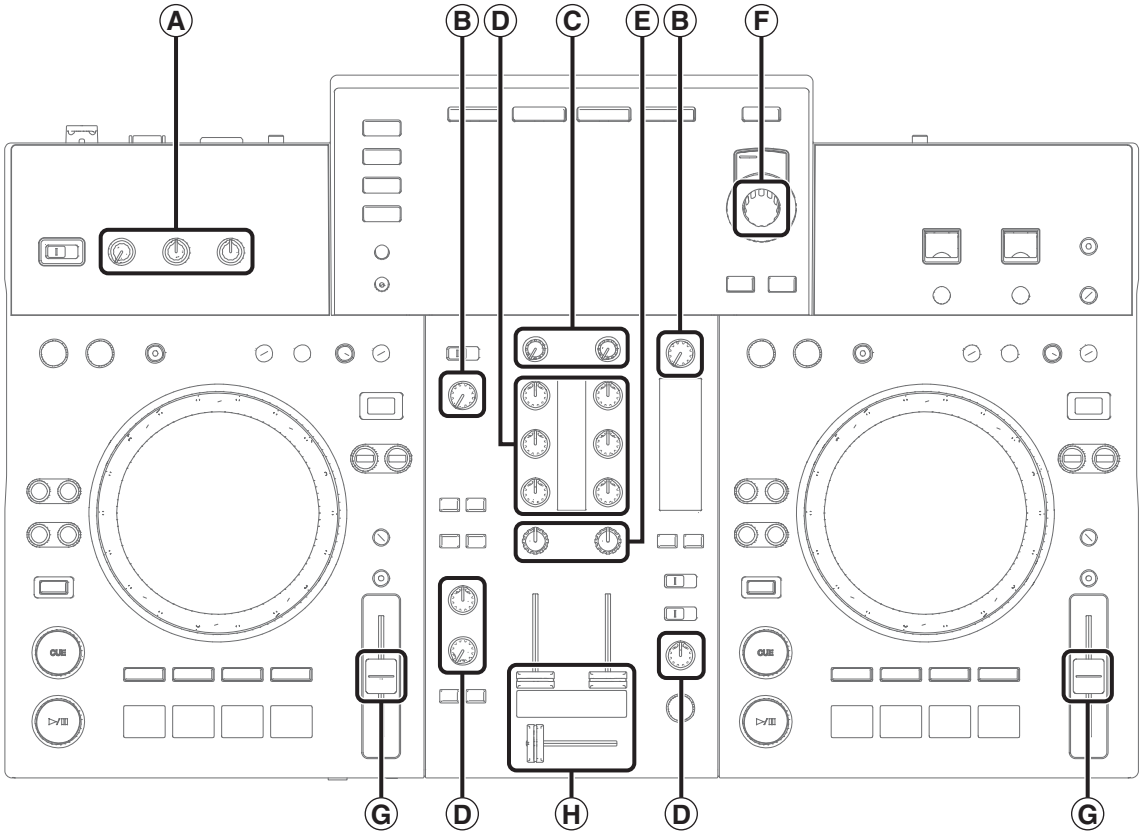

Ⓐ DAA1284 ×3

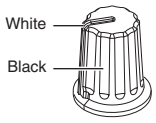

Ⓑ DAA1360 ×2

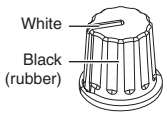

Ⓒ DAA1392 ×2

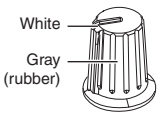

Ⓓ DAA1361 ×9

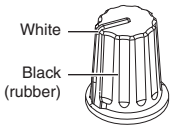

Ⓔ DAA1366 ×2

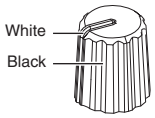

Ⓕ DAA1246 ×1

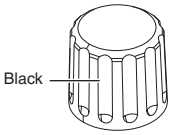

Ⓖ DNK6769 ×2

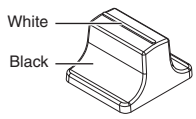

Ⓗ DAC2684 ×3 + DAC2685 ×3 + DNK6009 ×3

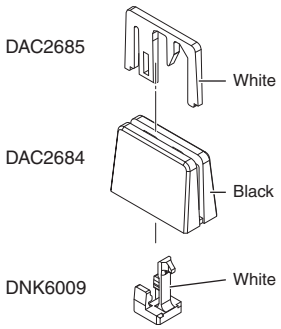

Disassembly

[1] Bottom Section

• Chassis

① Remove the 13 screws.
(BPZ30P100FTB)

② Remove the 1 screw and then, remove the Chassis.
(BBZ30P060FTB)

Screw tightening order

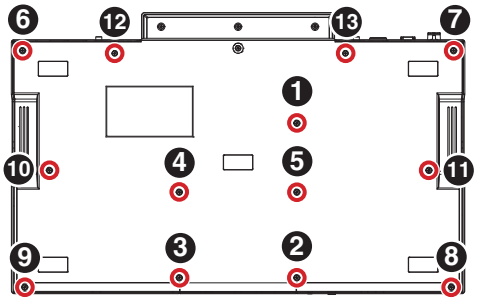

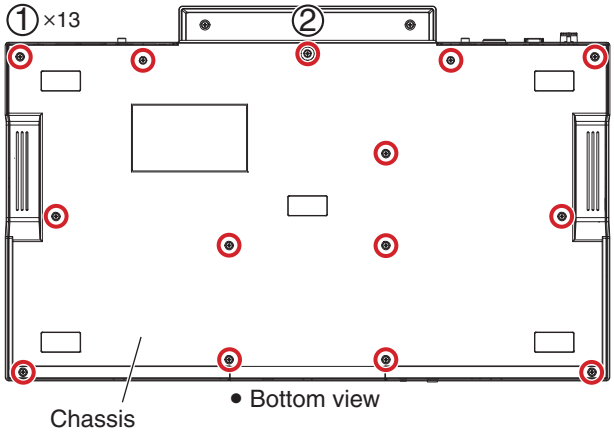

• Cover

① Remove the 3 screws.
(BBZ30P060FTB)

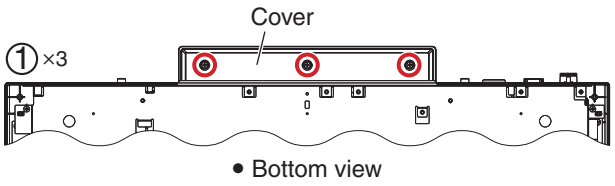

② Remove the 4 screws and then, remove the Cover.
(BBZ30P060FTB)

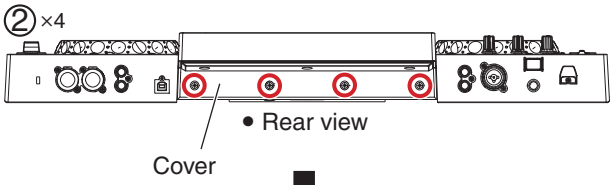

• Chassis Section

① Remove the 4 screws.
(BBZ30P060FTB)

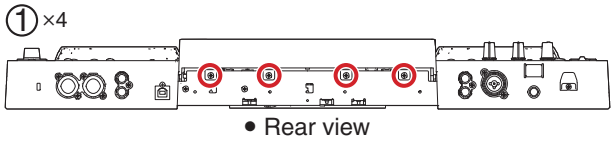

② Disconnect the 2 FFCs and 4 connectors.
(CN1602, 1603, 1901, 2101, 3403, 6001)
③ Release the jumper wire from 2 Holders.
④ Remove the 6 screws and then, remove the Chassis Section.
(BPZ30P080FNI)

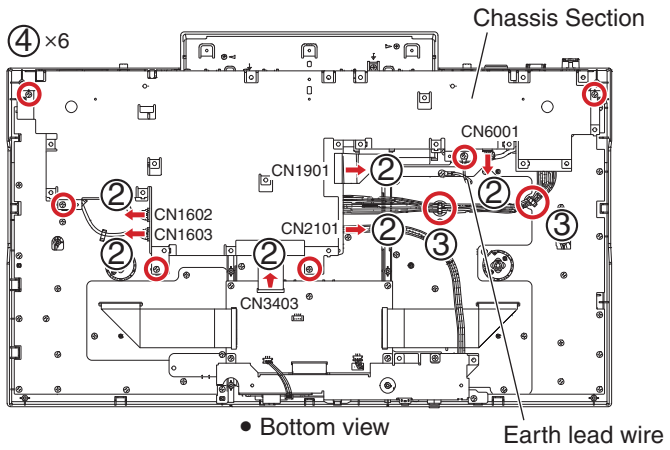

• USBB Assy

① Release the jumper wires from 5 Holders.
② Remove the 3 screws and then, remove the USBB Assy with the Stay.
(BPZ30P080FNI)

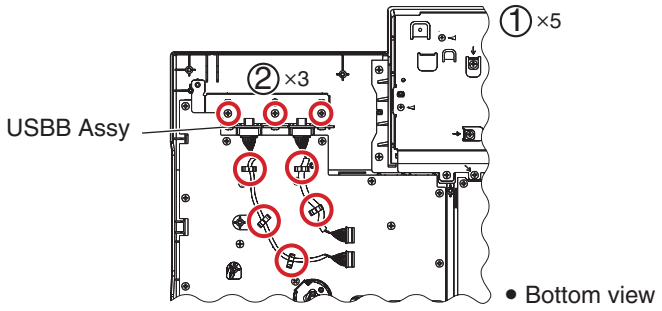

• Shield Case

① Remove the 2 screws
(BBZ30P060FTC)
② Remove the 6 screws and then, remove the Shield case.
(BBZ30P060FTC)

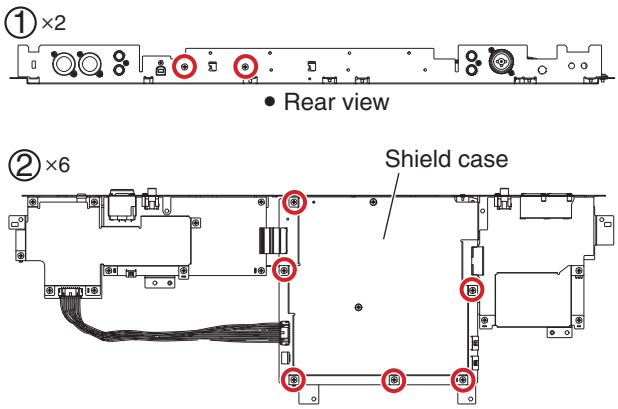

■ Diagnosis of MAIN Assy

When you diagnose MAIN Assy in an electricity state, perform it in the following procedures.
Extension FFCs to be used:
Extension FFC 50 pin (GGD1250)
Extension FFC 60 pin (GGD1380)

① Reconnect the USBB Assy.
② Replace the FFCs with the ones for diagnosis.

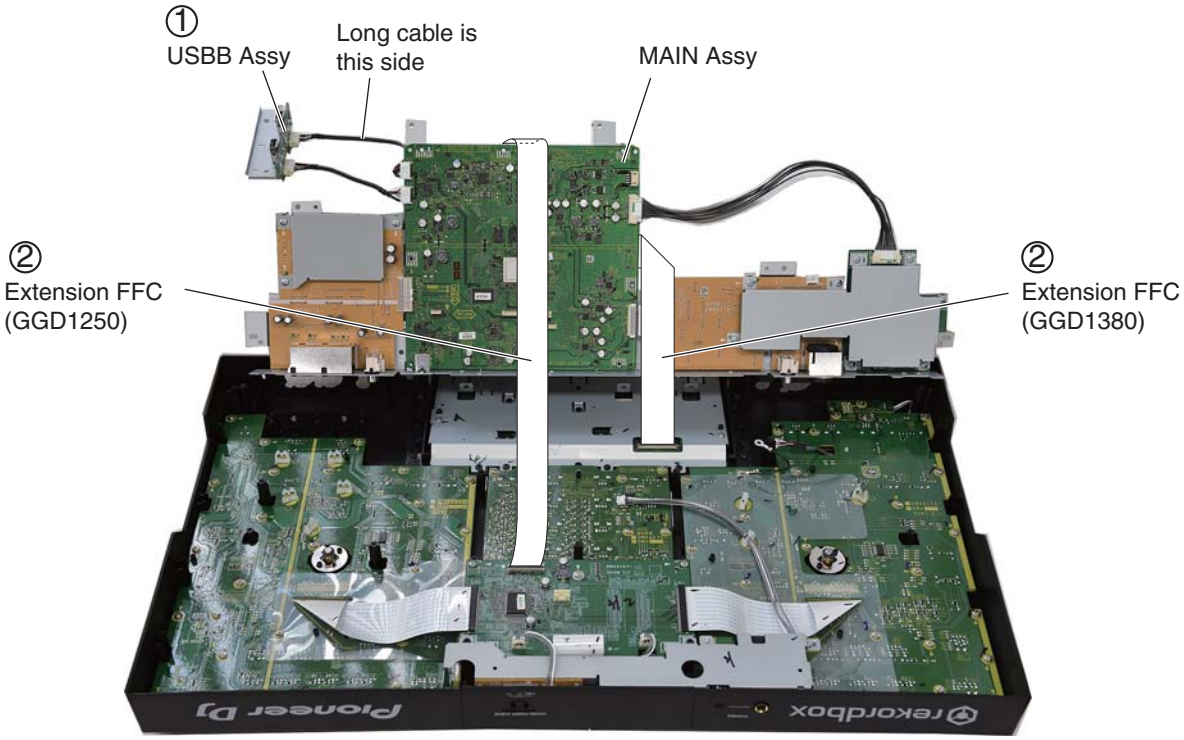

Diagnosis

[2] Chassis Section

• Shield Case

① Disconnect the connector. (CN101, 3902)
② Remove the 11 screws and then, remove the 2 Shield case. (BBZ30P060FTC)

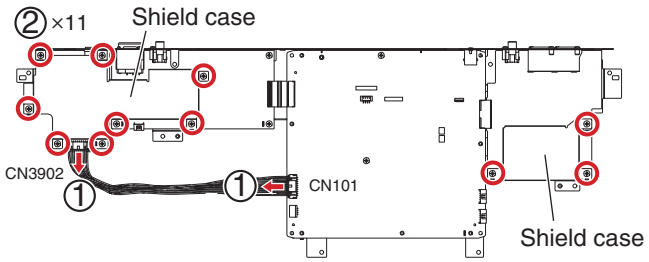

Screw tightening order

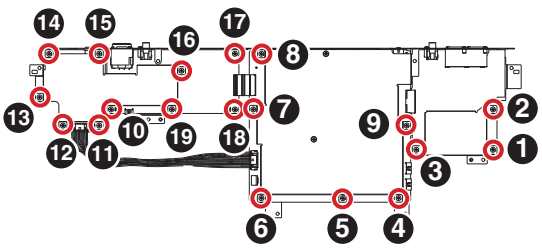

• **Each PCB Assemblies**

① Release the 3 BtoB connectors.
(CN1902, 1903, 3901, 5801, 6002, 6003)
② Remove the 4 screws.
(BBZ30P060FTC)

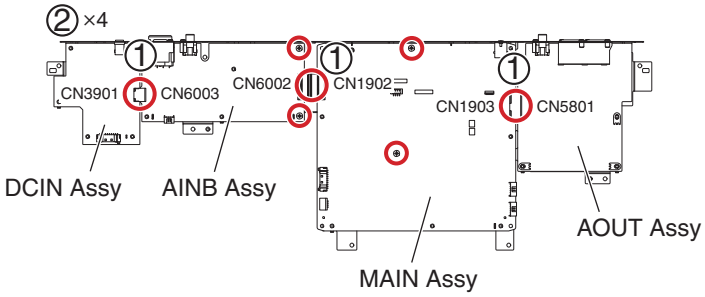

③ Remove the 8 screws.
(PPZ30P080FTB)
④ Remove the 1 screw.
(DBA1340)

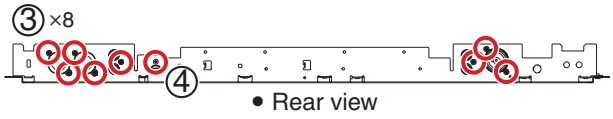

Screw tightening order

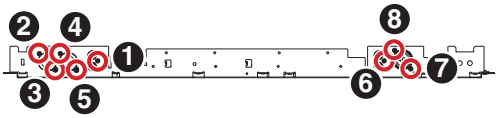

⑤ Remove the each PCB Assemblies.

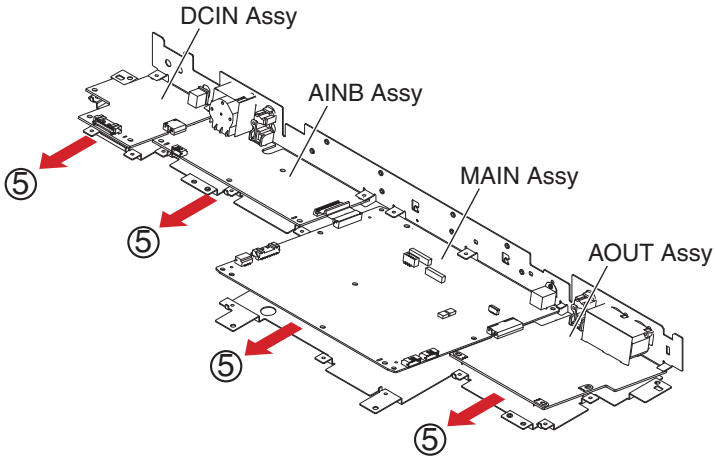

[3] LCD Section

• **LCD Section**

① Remove the 2 screws.
(BBZ30P060FTB)
② Remove the 6 screws and then, remove the LCD Section.
(BPZ30P100FTB)

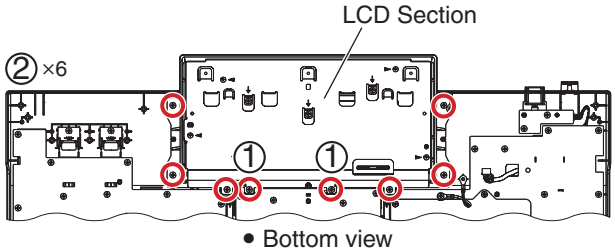

• **LCDB Assy, TFT LCD**

① Remove the Dial knob.

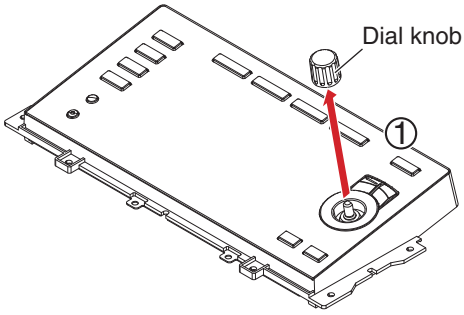

② Remove the 5 screws.
(BBZ30P060FTB)

③ Remove the 4 screws and then, remove the Shield case.
(BPZ26P080FTC)

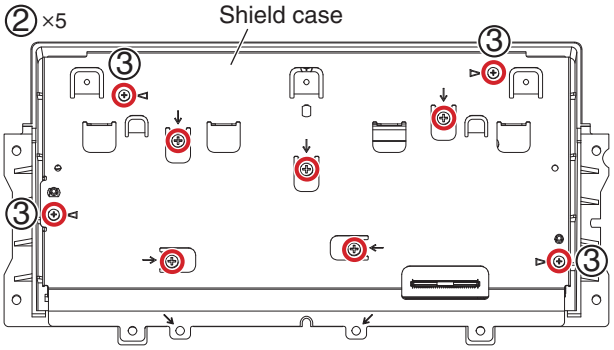

④ Disconnect the 1 FFC and 1 connectors.
(CN3002, 3201)

⑤ Remove the 13 screws and then, remove the LCDB Assy.
(BPZ26P080FTC)

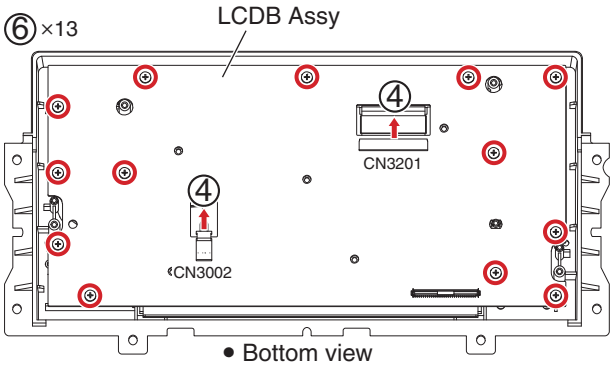

⑥ Remove the 4 screws and then, remove the Stay.
(BPZ26P080FTC)

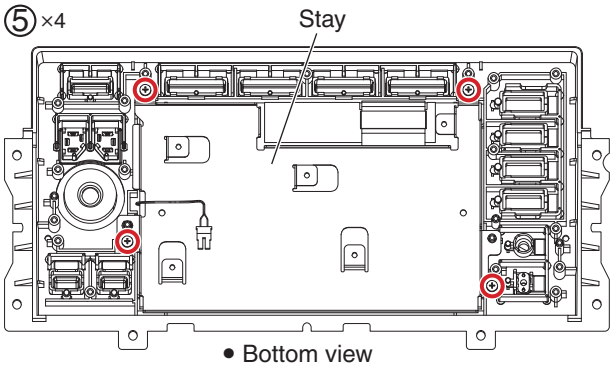

⑦ Remove the TFT LCD.

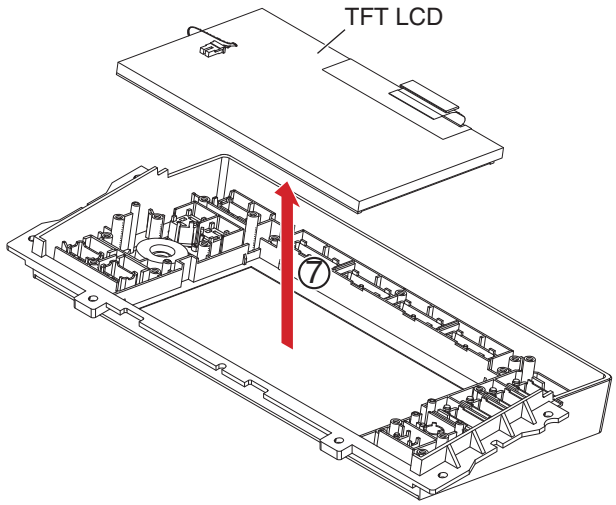

• Bottom view

• Notes on disassembling buttons

As shown below, 2 buttons on the panel are fixed button from the bottom side.
(A button has 2 hooks.)
When disassembling it, put off the hook by using an thin rod or the like.
In addition, the hook is fragile so please be careful.

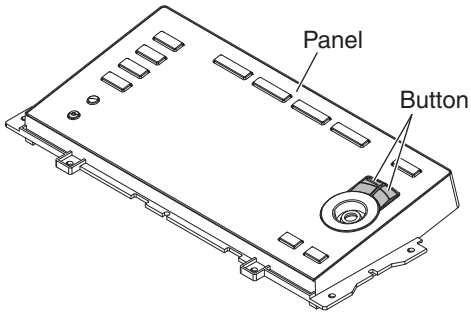

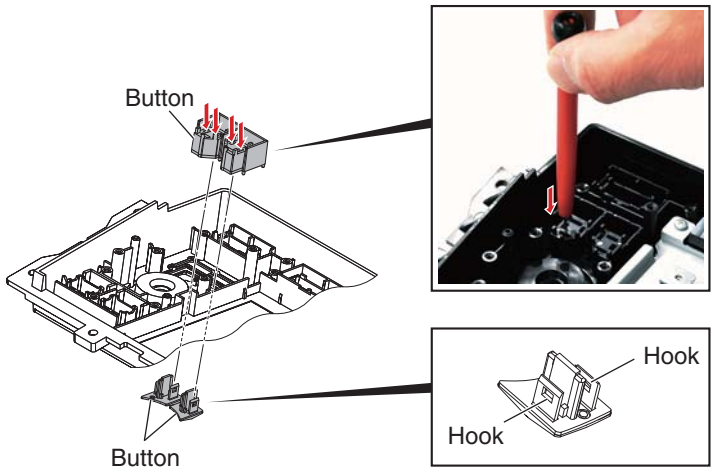

• Bottom view

[4] Control Panel Section

• HPJK and CRVB Assemblies

① Disconnect the 2 connectors.
(CN4601, 5101)
② Remove the 2 screws.
(BPZ30P100FTB)
③ Remove the 3 screws and then, remove the HPJK and CRVB Assemblies with the Stay.
(BPZ30P080FNI)

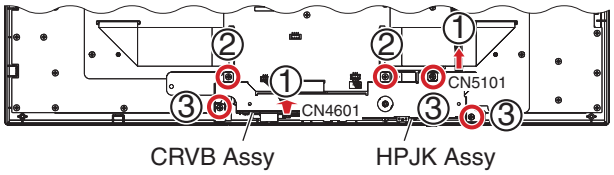

• Bottom view

Screw tightening order

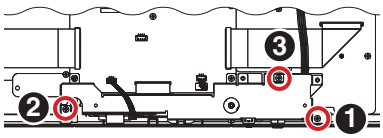

• Note on assembling

Tighten the screws so that headphone terminal (mini jack) does not go down too much.



Headphone terminal (mini jack)

• UCOM Assy

① Disconnect the 3 FFs and 1 connectors.
(CN3402, 3404, 3405, 3407)
② Remove the 3 screws and then, remove the UCOM Assy.
(BPZ30P080FNI)

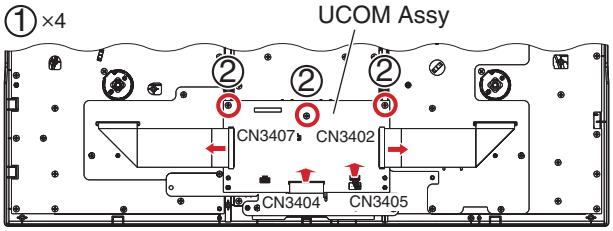

• Bottom view

• PSWB Assy

① Disconnect the 1 connector.
(CN4501)
② Remove the 2 screws.
(BPZ30P080FNI)
③ Remove the PSWB Assy with the Power knob.

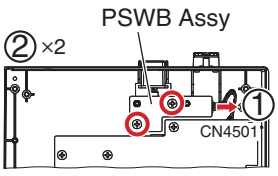

• Bottom view

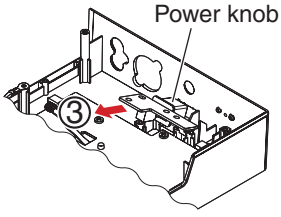

• Bottom view

• **Knobs**

① Remove the all knobs.
② Remove the 3 Slider knob 2, 2 Slider knob 1 and 3 Stopper/SLDs.
(See below.)

The reference of the direction

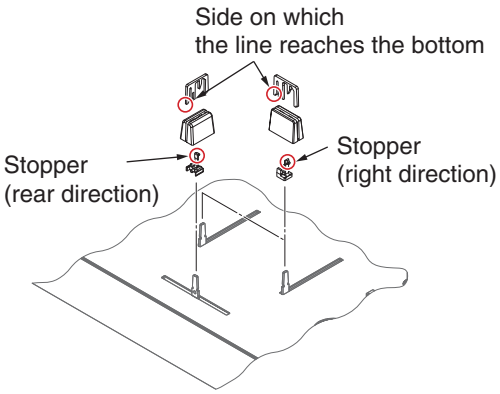

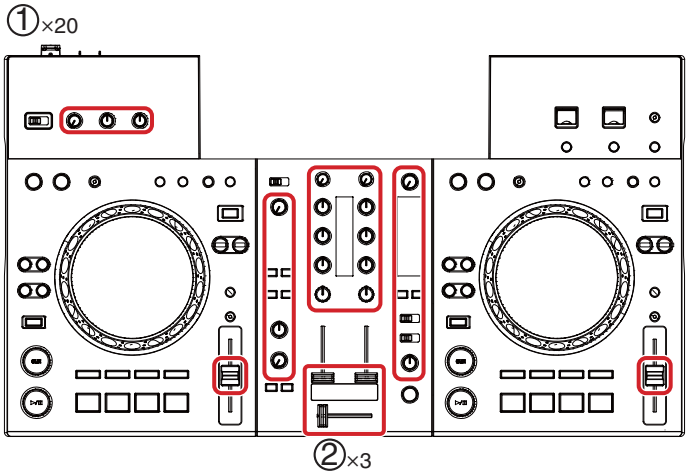

■ **Assembly / Reassembly of the Slider Knob 2, Slider Knob 1 and Stopper/SLD**

-Disassembly-

① Lift the lower end of the Slider knob 2, using a pointed tool.
② Pull the Slider knob 2 out upward.
③ Pull the Slider knob 1 out upward.
④ Pull the Stopper/SLD out horizontally.

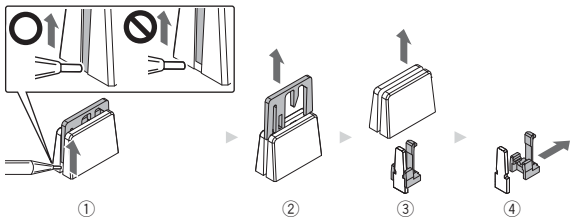

-Reassembly-

① Insert the Stopper/SLD horizontally.
② Insert the Slider knob 1, paying attention to its orientation.
③ Insert the Slider knob 2, paying attention to its orientation.

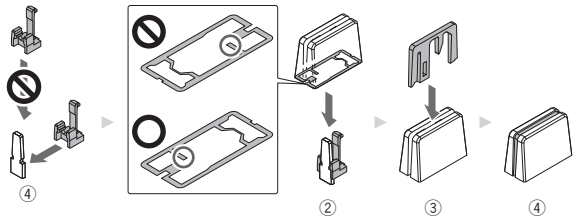

• MXRB, CRFD, DCK1 and DCK2 Assemblies

① Remove the 2 screws.
(BPZ30P100FTB)
② Remove the 66 screws.
(BPZ30P080FNI)

Screw tightening order

The other screws are random order.

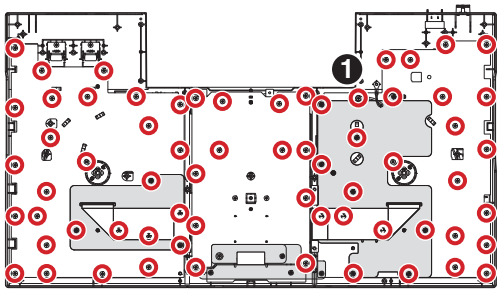

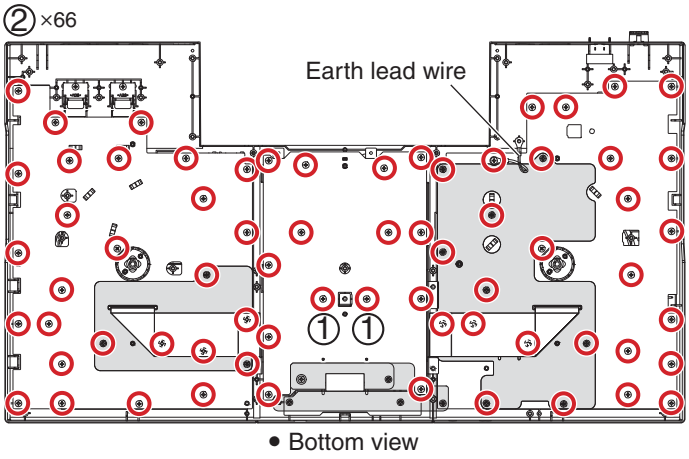

③ Remove the 1 screw.
(BPZ30P080FNI)
④ Open the Barrier.
⑤ Remove the 4 screws.
(BPZ30P080FNI)

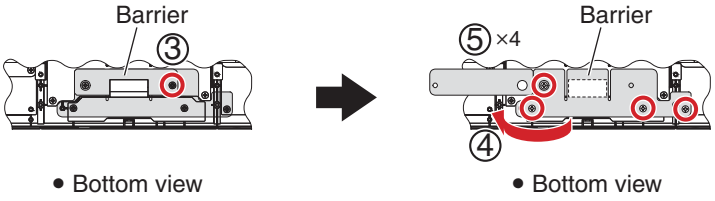

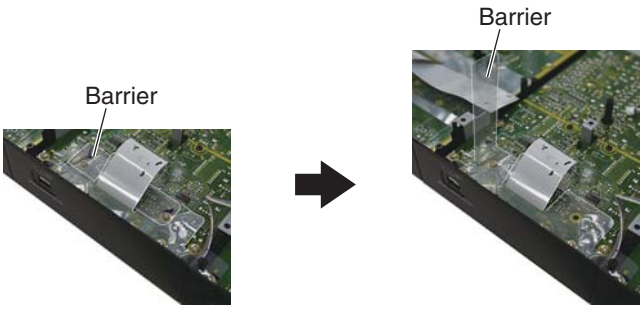

⑥ Remove the 3 Barriers.
⑦ Remove the MXRB, CRFD, DCK1 and DCK2 Assemblies.

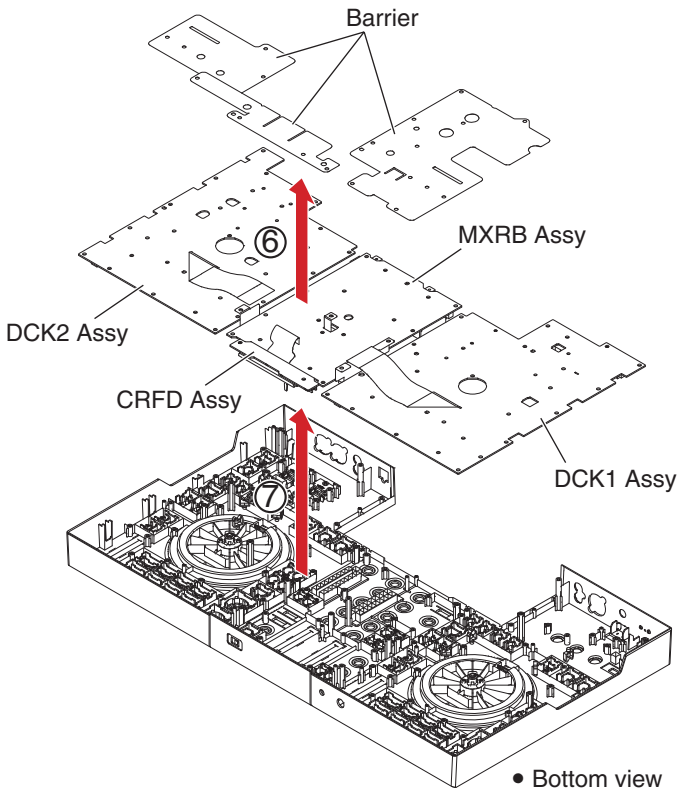

• MXRB and CRFD Assemblies

① Remove the 15 washers and 15 nuts.
② Remove the 4 screws. (PMH20P040FTC)
③ Remove the 2 screws. (IMZ30P040FTC)
④ Remove the 2 Stays.
⑤ Remove the 3 SW caps.

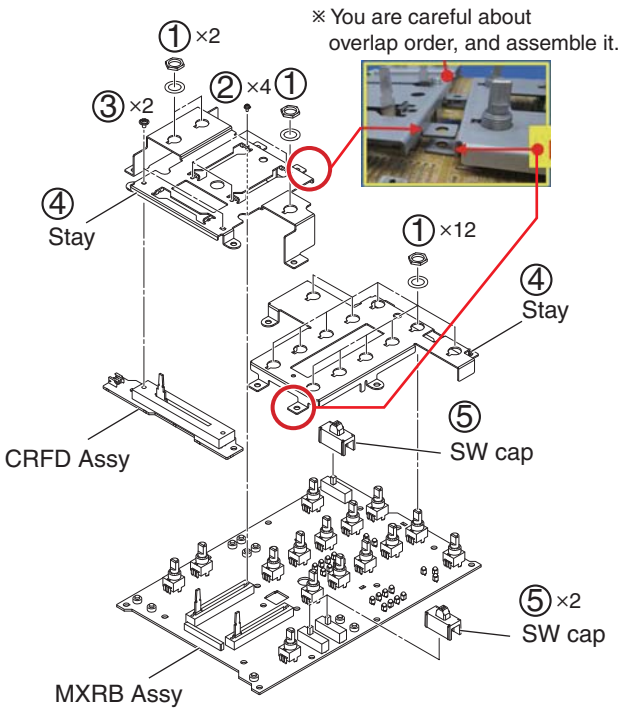

Screw tightening order

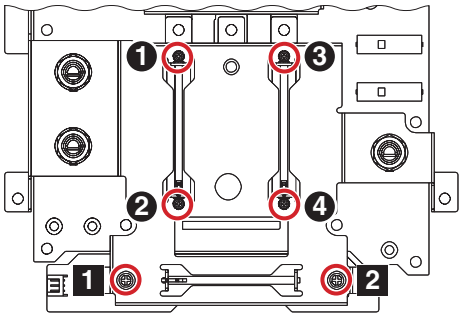

[5] Jog dial Section

Note:
When you remove the Jog dial section, it is not necessary to remove the each PCB Assemblies.
A figure is only Right DECK side, but the left DECK side is similar, too.

Remove the chassis by removing the 14 screws.
(BPZ30P100FTB, BBZ30P060FTB)

---

① Remove the 1 washer.
(YC60FAC)
② Remove the 1 washer.
(WA62D095D050)
③ Remove the Jog dial section.
④ Remove the 1 washer.
(WA62D095D050)

※ When you reassemble the Jog dial section, work on grease application according to "Procedure for applying grease during reassembly of the Jog dial" of the next clause.

For Disassembly/Assembly of Washer (①: YC60FAC)

Please use the jig. (Recommend Snap ring pryor.)



Insert the jig in the hole. Open the jig.

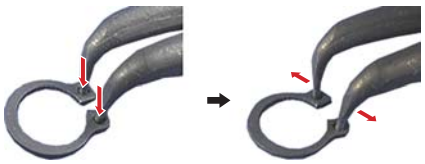

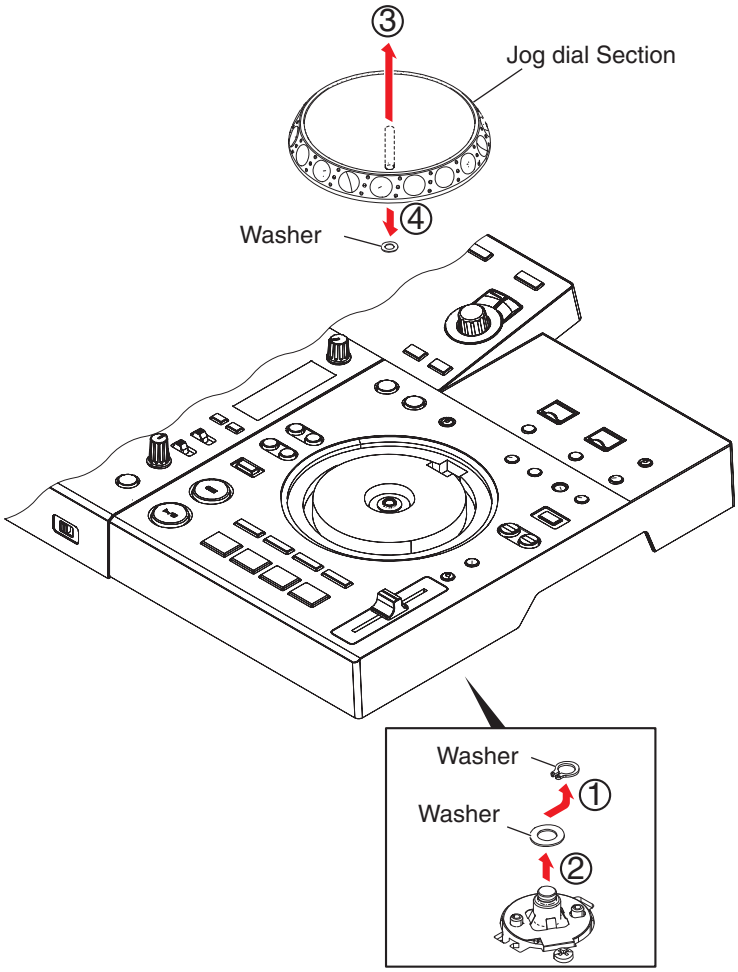

Procedure for applying grease during reassembly of the Jog dial

[Cases where the Jog dial is required to be detached]
- When the Jog dial is to be replaced
- When the control panel is to be detached for replacement

After the control panel is detached, carefully wipe off the grease from the Jog dial, as well as from the shaft bearing, then apply new grease, in the following manner:
Grease to be used: GEM1100

① Apply grease to the tip and base of the shaft of the Jog dial, one round each.



• Bottom view

② Put a washer (WA62D095D050) on the shaft and place it at the base of the shaft.

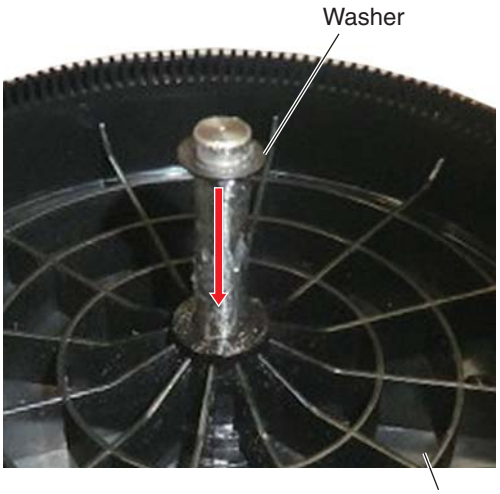

• Bottom view

③ Apply grease lightly to the shaft bearing of the control panel up to a depth of approximately 10 mm from the upper-panel side. Then turn the control panel over and apply grease from the opposite side in the same manner.

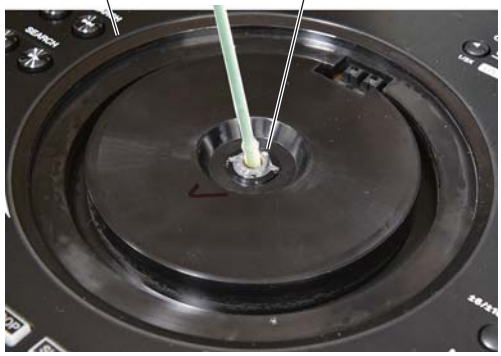

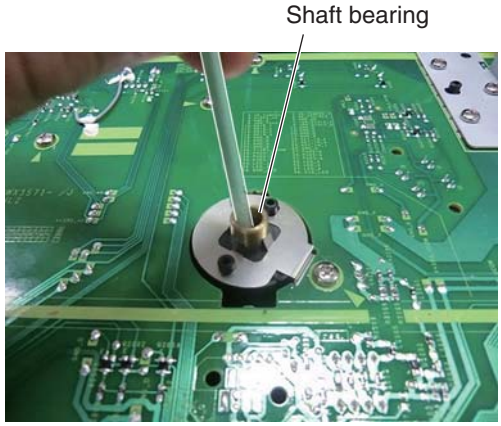

• Bottom view

④ Turn the control panel over again then apply a small amount of grease to one point of the shaft bearing on the upper-panel side.



⑤ Insert the Jog dial in the shaft bearing while turning it.



⑥ Turn the control panel over then wipe off the excess grease.



• Bottom view

⑦ Put the washer (WA62D095D050) on the shaft.

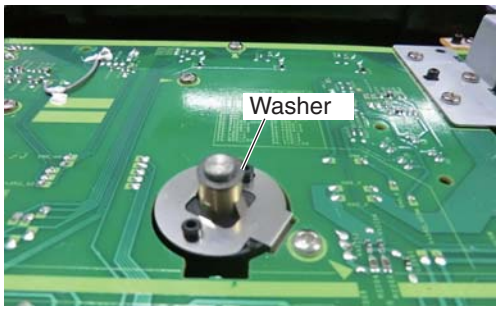

• Bottom view

⑧ Put the washer (YC60FAC) on the groove of the shaft.



• Bottom view

The washer must be properly fit with the groove.



• Bottom view

⑨ Turn the control panel over then check that the Jog dial rotates properly.

⑩ Perform manual running-in rotations of the Jog dial, as indicated below.

❶ Turn the Jog dial manually 50 rotations.

❷ Perform failure judgment of the Jog dial.
For details on the measurement method, see "8.3 MEASUREMENT OF ROTATION LOAD OF THE JOG DIALS."

❸-1 In a case of failure because of excessive load, repeat the following procedure until a good result is obtained in failure judgment.
Manually turn the Jog dial 50 rotations then perform failure judgment of the Jog dial again.

❸-2 In a case of failure because of insufficient load, apply grease again.
(Repeat the above procedures from Step ❶.)

Note:
After disassembly, be sure to wipe off grease cleanly. Thereafter apply grease again.

8. EACH SETTING AND ADJUSTMENT

8.1 NECESSARY ITEMS TO BE NOTED

After repairing, be sure to check the version of the firmware, and if it is not the latest one, update to the latest version.
Perform the each item when the following parts are replaced.

- IC / PCB Assy storing firmware and utility settings
  IC901 (Flash memory IC) / MAIN Assy
  → • Confirmation of the version of the firmware
  • Updating to the latest version of the firmware
  (8.2 UPDATING OF THE FIRMWARE)
  • Writing the serial number of the unit
  (8.5 WRITING THE SERIAL NUMBER OF THE UNIT)
  • Factory reset
  (Be changed user setting to condition before the repair when be possible)

- Flash ROM IC / PCB Assy storing firmware
  IC3401 / UCOM Assy
  → • Confirmation of the version of the firmware
  • Updating to the latest version of the firmware
  (8.2 UPDATING OF THE FIRMWARE)

- JOG dial section component part
  → • Confirmation of the specified value by JOG dial Rotation Time measurement mode
  (8.3 MEASUREMENT OF ROTATION LOAD OF THE JOG DIALS)

- Photointerrupter / PCB Assy
  PC4101, PC4102, PC4701, PC4702 /
  DCK1 Assy, DCK2 Assy
  → • Confirmation of the degree of leaning of photointerrupter
  (6.1 TEST MODE_The confirmation mode about the installation of Photo interrupter)
  (8.4 CONFIRMATION OF THE DEGREE OF LEANING PHOTO INTERRUPTER)

8.2 UPDATING OF THE FIRMWARE

Note:
If the power cord is disconnected during updating, perform updating again after the unit is turned on the next time. Then you can operate the unit normally.
In that case, "Connect USB storage device into top USB1 port" is displayed on the display, and the product can not be operated. Please start the firmware update from step ③. Then you can operate the unit normally.

You cannot operate the unit normally without reperforming updating.

Procedure

① Copy an update file (XDJRR.UPD) to a root folder of USB device.

② Turn on the power, pressing the USB1 USB1 STOP, DECK 2 RELOOP/EXIT buttons.
(Be sure to hold the ⏻ switch pressed until the unit starts up.)

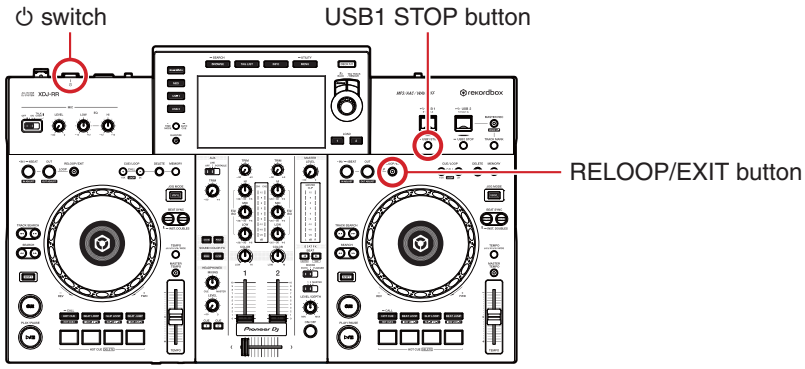

③ Insert the USB device into the USB 1 slot which you wrote in an update file at with step ①.

④ Update is started.

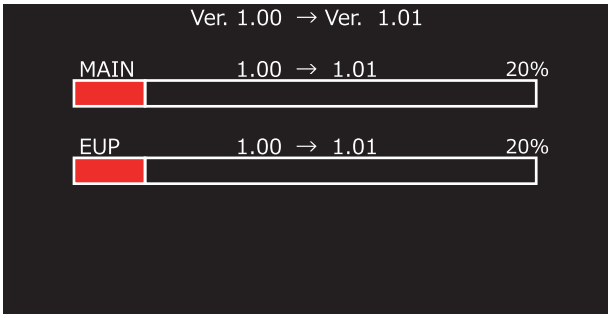

⑤ Update is completed, and displayed "Firmware update is complete."

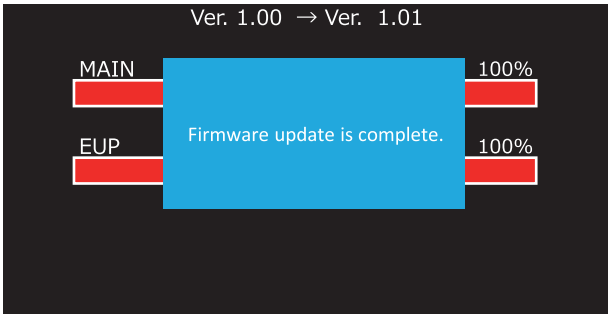

8.3 MEASUREMENT OF ROTATION LOAD OF THE JOG DIALS

■ Measurement content

The time required for the JOG dial to decrease its rotation speed from 3 times to 1.5 times normal speed will be measured.
If the maximum speed does not reach 7 times normal speed, measurement will not be performed.
Either rotation direction will do.
The RELOOP/EXIT button lights on during measurement.
(If the RELOOP/EXIT button is off, the measurement is not done.)

■ Indications

① Mode: Press the SHIFT button and LOOP IN/4BEAT button, switch between SPEC1 and SPEC2.
- SPEC1 (The LED of LOOP IN/4BEAT button is OFF) : The measuring mode for production line (Do not use it in Service)
- SPEC2 (The LED of LOOP IN/4BEAT button is ON) : The measuring mode for service (Use it in Service)

※Caution : If past measurement data remains, reset is performed before measurement.

② Number of measurement sessions:
The accumulated number of measurement sessions from a measurement start will be displayed (1, 2, 3, . . .).
The number will be reset to 1 when the rotary selector is pressed.

③ Maximum speed: The maximum speed in each measurement session will be displayed (unit: × normal).

④ Measured value: The time required for the rotation speed to slow down from 3 times to 1.5 times normal speed ("slowdown time") in each measurement session will be displayed (unit: ms).

⑤ Average value: The average value of all measured values (④ above) will be displayed (unit: ms).
The number will be reset to 0 when the rotary selector is pressed.

⑥ Judgement: When the average value of ⑤ is within the following range, "OK" is displayed. If it is out of range, "NG" is displayed.
Even if the display of "OK" or "NG" comes out, it continues to judge.
If the number of measurements in ② is 3 or less, it will be hidden.

SPEC1 : 50 to 100 msec
SPEC2 : 50 to 130 msec

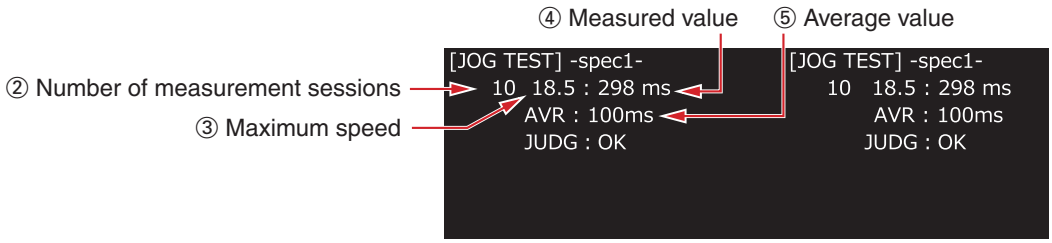

■ Reset

Press the SHIFT button and the rotary selector, all data is reset only the DECK side pressing the SHIFT button.
※Caution : If past measurement data remains, reset is performed before measurement.

■ Measurement history display

The measurement data (②, ③, and ④ above) from each measurement session will be stored in memory for up to 99 sessions.
To display measurement data, turn the rotary selector while holding the SHIFT button of each deck pressed.

■ Procedures

1. After reassembly, perform manual run-in rotations for 20–30 seconds so that grease will spread evenly and entirely.

2. Enter the mode for Confirmation of Rotation Load of the JOG dial.
   To enter this mode, while holding the TEMPO RANGE and RELOOP/EXIT buttons of the DECK 1 pressed, hold the ⏻ switch pressed to turn the unit ON. (Be sure to hold the ⏻ switch pressed until the unit starts up.)

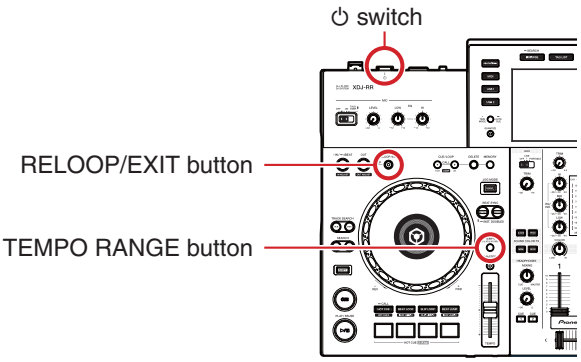

3. Switch to SPEC2 mode, press the SHIFT and LOOP IN/4BEAT button.

4. Turn the JOG dial swiftly. Always turn the JOG dial in the same direction.

5. The rotate decline time (unit: ms) will be measured.

6. Perform measurement 3 times. Confirm the rotate decline time (unit: ms) displayed on the screen.

■ Correspondence when measurements is outside the specified range

If the average value (unit: ms) is outside the specified range (50–130 ms), perform the following adjustment:
   If the value exceeds 130 ms: Reapply grease.
   If the value is below 50 ms: Perform additional run-in rotations.

8.4 DEGREE OF LEANING CONFIRMATION OF PHOTO INTERRUPTER

Please also refer to "6.1 TEST MODE"_"The confirmation mode about the installation of the photo interrupter" for confirmation.

Moreover, it performs while monitoring the following signal waveform. (Refer to the test point position on the next page)
UCOM Assy: JOG trigger signal (IC3401 38 pin)
DCK1 Assy: DCK1_JOG_R0, DCK1_JOG_R1
DCK2 Assy: DCK2_JOG_R0, DCK2_JOG_R1
※ The oscilloscope which is measurable more than 3CH to confirm it is necessary.

■Procedure

While holding the DECK 2 SHIFT and DECK2 LOOP OUT buttons pressed, press the ⏻ switch to turn on the unit.
(Be sure to hold the u switch pressed until the unit starts up.)
Rotate the JOG dial of DECK vigorously you want to measure.
When the rotation speed reaches the speed of each mode, the JOG trigger signal becomes 3.3 V.
Check the JOG rotation signal at that time.

■Evaluation criteria

OK: The pulse interval of JOG_R1 (between Rising and Rising) (A) and the phase difference between the rising and falling edges of JOG_R0 and JOG_R1 (B,C,D,E) are within the range of the table below.
And, the phase relation is normal.

Mode	A [usec]			B to D	E	Mode setting button
	min	typ	max			
The measurement mode in 20x speed	477	500	525	More than 10 usec		HOT CUE button
The measurement mode in 15x speed	626	667	713			BEAT LOOP button
The measurement mode in 10x speed	910	1000	1110		More than 200 usec	SLIP LOOP button
The measurement mode in 5x speed	1668	2000	2499			BEAT JUMP button

NG: Even one of the above conditions is not satisfied.

■Correspondence in case of NG

Attach the new photo interrupter not to incline.

■Reference information of waveforms

CH1: JOG TRIG
CH2: JOG_R0
CH3: JOG_R1

Right rotation ※The rising edge of JOG_R0 is earlier

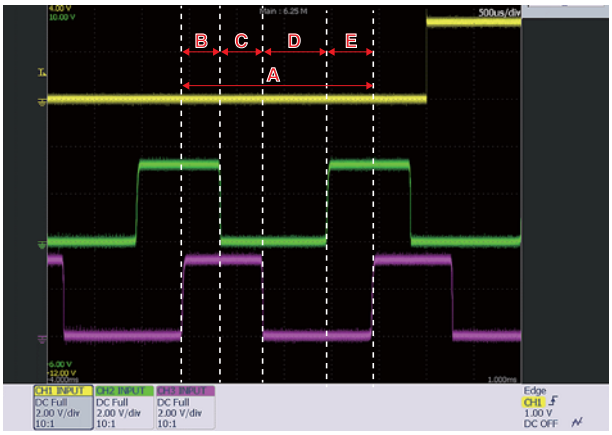

Left rotation ※The rising edge of JOG_R1 is earlier

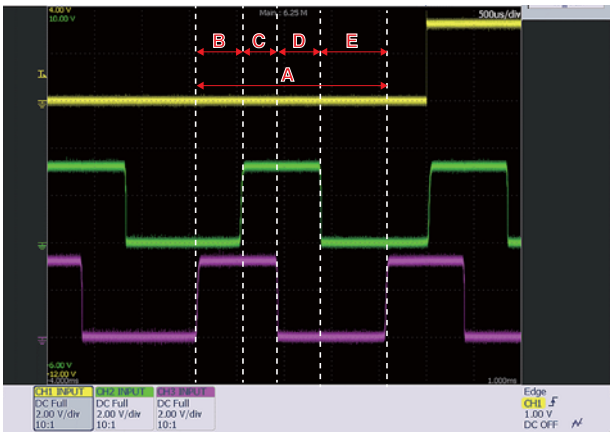

■The position of the test point

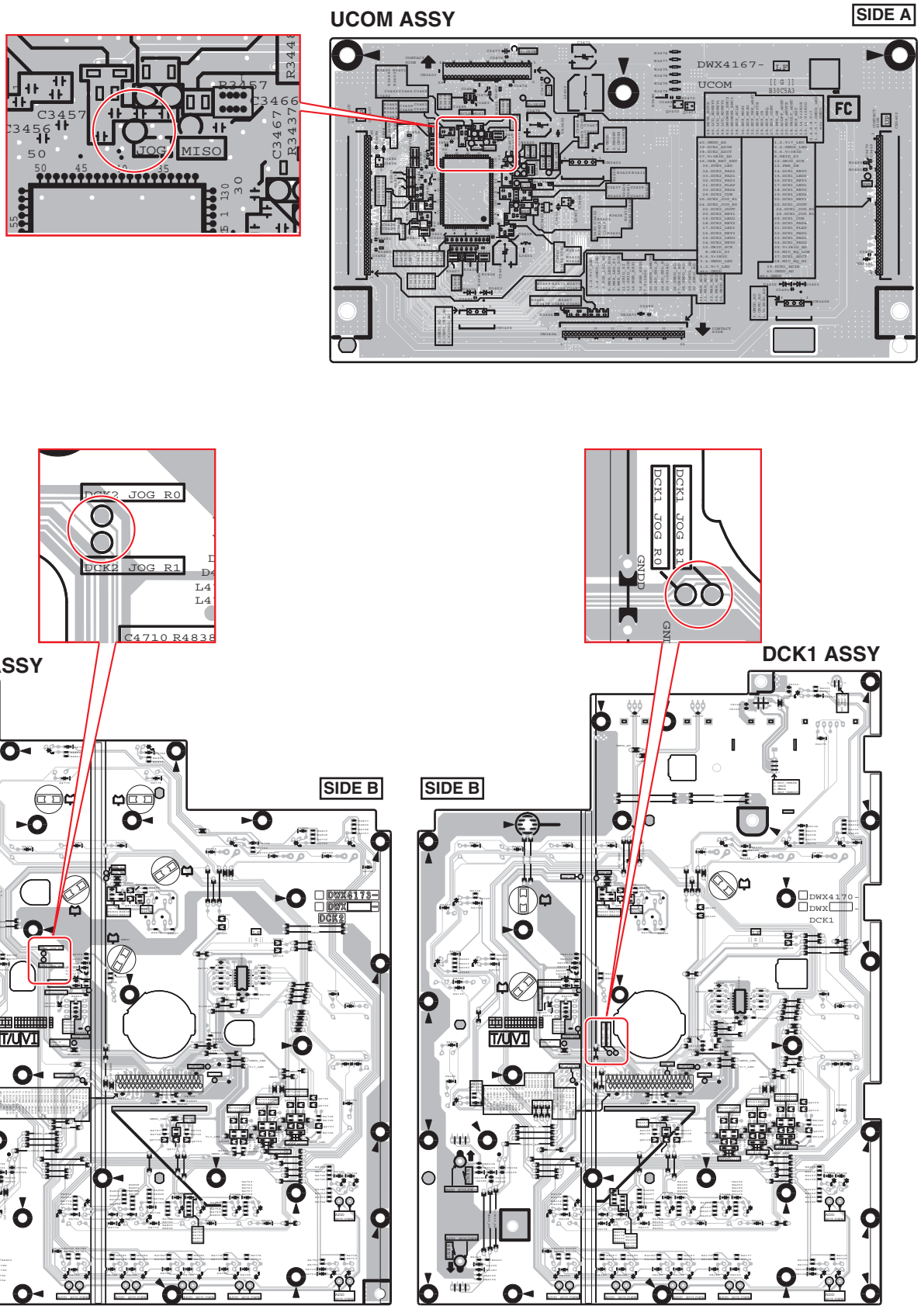

8.5 WRITING THE SERIAL NUMBER OF THE UNIT

Writing the serial number can be performed from a PC that is connected with this unit via a USB B cable.

Preparations

① Download the software for writing the serial number from Niis.
② The compressed files decompress and save to PC.
The generated folder is below.
- Ini folder
- Log folder
- XDJRR_SNW.exe
- hidcom.dll

Procedure

① Turn on PC, and click “XDJRR_SNW.exe” in the generated folder. When the software is started, untick “Label print”.

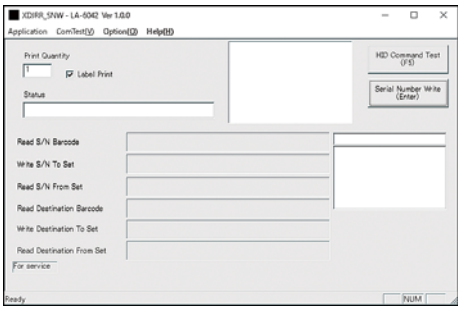

② Connect the unit with a PC via a USB B cable.

③ While holding the DECK 1 MEMORY and DECK 1 TEMPO RANGE buttons pressed, press the ⏻ switch to turn the unit on. (Start up the unit in Test mode.)

④ Push [Serial Number Write] button, display serial input dialog (first time).

Enter serial number by handwork or barcode reader, and push “Enter”.
If enter by handwork, enter “ ' ” before serial number.
(If forgot, displayed error)
If enter by barcode reader, need to connect for PC in advance.

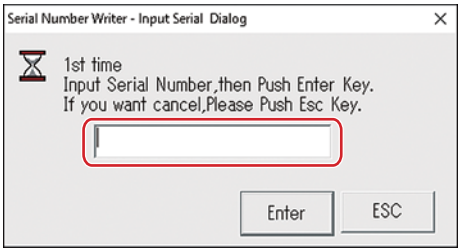

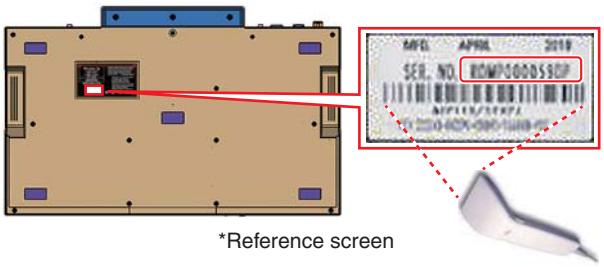

*Reference screen

⑤ Again display serial input dialog (second time), enter serial number by handwork or barcode reader, and push “Enter” like Step ④.

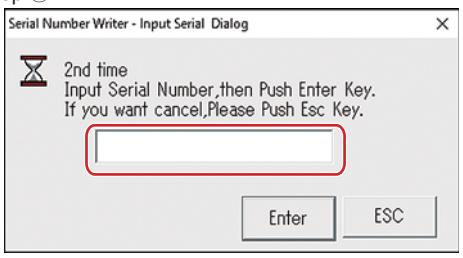

⑥ Dialog is displayed for the input of Destination Code, you need to enter in accordance with following table.

Model Name	Input Destination Code	LANGUAGE
XDJ-RR/SYXJ	XDJ-RR/S	ENGLISH
XDJ-RR/FWLPWXJ	XDJ-RR/F	ENGLISH
XDJ-RR/UXJCB	XDJ-RR/U	ENGLISH
XDJ-RR/AXJ	XDJ-RR/A	CHINESE

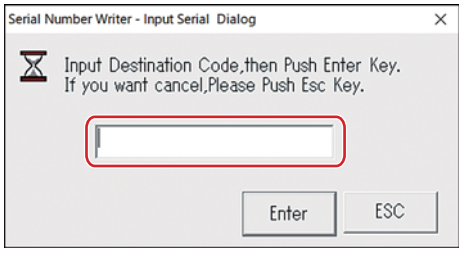

⑦ If update is finished correctly, display “OK” after a while.



This is completed about to write serial number for system.
You need to confirm by Test mode about to write correctly.

The unit is already starting in Test mode [Mode 1 VERSION INFORMATION]. Confirm that "LANGUAGE" is "ENGLISH (AXJ model: CHINESE)" and "SERIAL" is the same as the serial number of the unit.

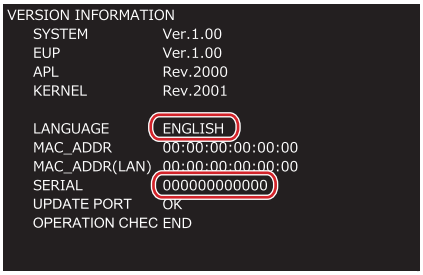

8.6 USER SETABLE ITEMS

This unit is provided with user settable items, as shown below.
Although no serious operational problems occur even if data for such user settable items are cleared during repair, it is recommended that you take note of those settings before starting repair.
Use the Check Sheet, to which you can transcribe the settings.
You can confirm the [UTILITY] setting in a main unit display. You can confirm the setting of the key in a main unit display or a lighting state of the applicable key.

If the corresponding part or board Assy is replaced for repair, change the user resettable settings to those noted on the Check Sheet before starting repair. If resetting is not possible, when returning the repaired product, be sure to tell the customer that the Utility settings have been cleared and will have to be reset, as required.

Item for Which User's Setting is Available	Setting Value (The factory default settings are indicated in red letters.)	Part Name	Content to be Stored
LOAD LOCK	LOCK / UNLOCK	IC901 (NSP) (MAIN Assy)	[UTILITY] setting
QUANTIZE BEAT VALUE (DECK)	1/8, 1/4, 1/2, 1		
HOT CUE AUTO LOAD	ON / rekordbox SETTING / OFF		
HOT CUE COLOR	ON / OFF		
AUTO CUE LEVEL	–36 dB / –42 dB / –48 dB / –54 dB / –60 dB / –66 dB / –72 dB / –78 dB / MEMORY		
ON AIR DISPLAY	ON / OFF		
AUTO PLAY MODE	ON / OFF		
EQUALIZER CURVE	EQUALIZER / ISOLATOR		
CHANNEL FADER CURVE	[ ]CURVE1 / [ ]URVE2 / [ ]RVE3		
MASTER ATTENUATOR	–12 dB / –6 dB / 0 dB		
HEADPHONES MONO SPLIT/STEREO	MONO SPLIT / STEREO		
MIXER MODE	XDJ-RR / MIDI CONTROL		
LANGUAGE	Language of each destination		
LCD BRIGHTNESS	1 / 2 / 3 / 4 / 5		
SCREEN SAVER	ON / OFF		
AUTO STANDBY	ON / OFF		
VERSION No.	Firmware version		
TIME MODE	TIME / REMAIN (Main unit display)	IC901 (NSP) (MAIN Assy)	Key status
Vinyl MODE	ON / OFF (Button light up)		
AUTO CUE	ON / OFF (Main unit display)		
QUANTIZE (DECK, EFFECT)	ON / OFF (Main unit display section)		
MASTER TEMPO	ON / OFF (Button light up)		
TEMPO RANGE	±6 / ±10 / ±16 / WIDE (Main unit display)		

Sheet for confirmation of the user setting

LOAD LOCK		QUANTIZE BEAT VALUE (DECK)				HOT CUE AUTO LOAD			HOT CUE COLOR	
LOCK	UNLOCK	1/8	1/4	1/2	1	ON	rekordbox SETTING	OFF	ON	OFF

AUTO CUE LEVEL									ON AIR DISPLAY	
–36 dB	–42 dB	–48 dB	–54 dB	–60 dB	–66 dB	–72 dB	–78 dB	MEMORY	ON	OFF

AUTO PLAY MODE		EQUALIZER CURVE		CHANNEL FADER CURVE			MASTER ATTENUATOR		
ON	OFF	EQUALIZER	ISOLATOR	CURVE1	CURVE2	CURVE3	–12 dB	–6 dB	0 dB

HEADPHONES MONO SPLIT/STEREO		MIXER MODE		LCD BRIGHTNESS				
MONO SPLIT	STEREO	XDJ-RR	MIDI CONTROL	1	2	3	4	5

SCREEN SAVER		AUTO STANDBY		VERSION No.	TIME MODE		Vinyl MODE		AUTO CUE	
ON	OFF	ON	OFF		TIME	REMAIN	ON	OFF	ON	OFF

QUANTIZE (DECK, EFFECT)		MASTER TEMPO		TEMPO RANGE			
ON	OFF	ON	OFF	±6	±10	±16	WIDE

9. EXPLODED VIEWS AND PARTS LIST

NOTES: ● *Parts marked by "NSP" are generally unavailable because they are not in our Master Spare Parts List.*
● *The ⚠ mark found on some component parts indicates the importance of the safety factor of the part. Therefore, when replacing, be sure to use parts of identical designation.*
● *Screws adjacent to ▼ mark on product are used for disassembly.*
● *For the applying amount of lubricants or glue, follow the instructions in this manual. (In the case of no amount instructions, apply as you think it appropriate.)*

9.1 PACKING SECTION

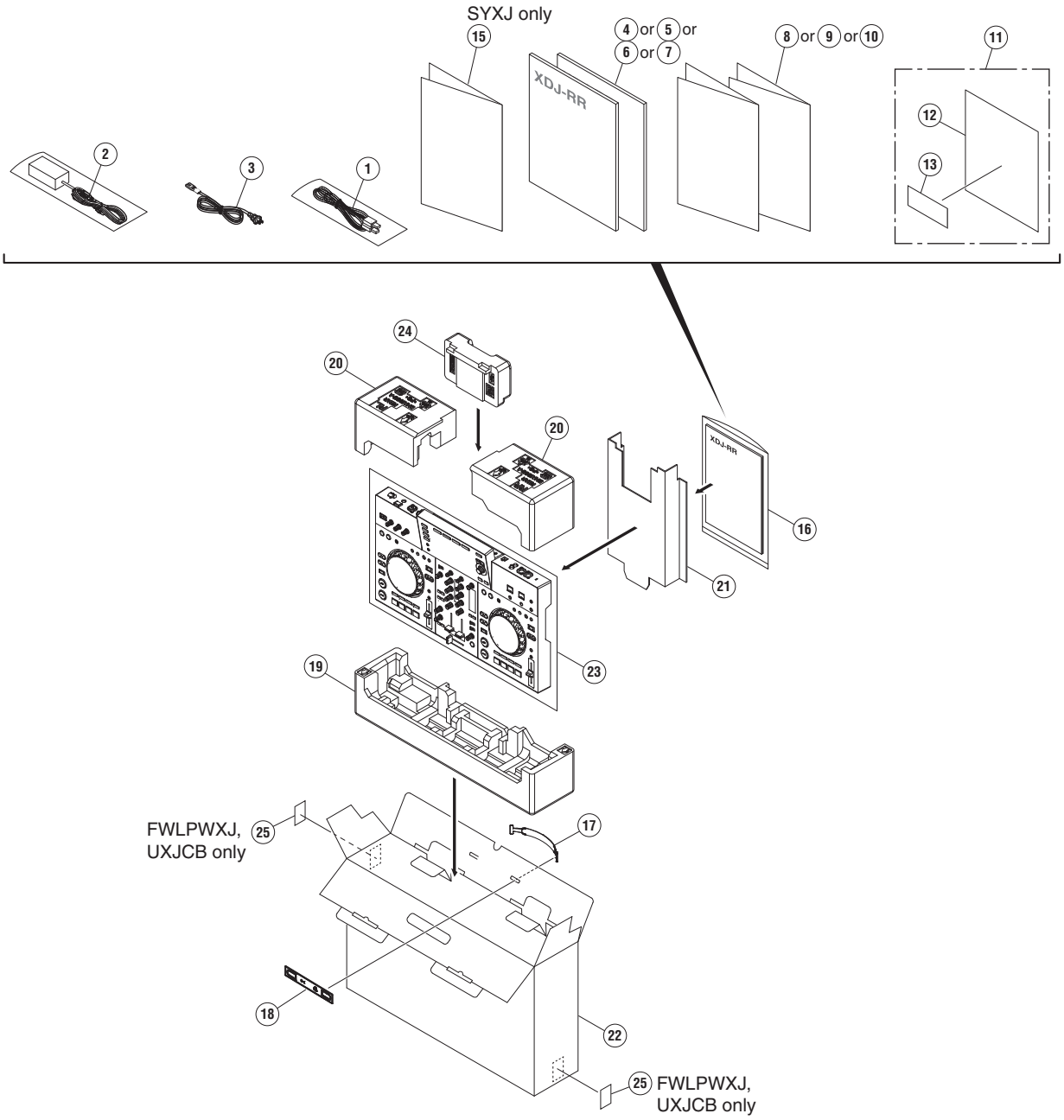

(1) PACKING SECTION PARTS LIST

Mark	No.	Description	Part No.
	1	USB Cable	DDE1150
⚠	2	AC Adapter	DWR1574
⚠	3	Power Cord	See Contrast table (2)
	4	Operating Instructions (Quick Start Guide)	See Contrast table (2)
	5	Operating Instructions (Quick Start Guide)	See Contrast table (2)
	6	Operating Instructions (Quick Start Guide)	See Contrast table (2)
	7	Operating Instructions (Quick Start Guide)	See Contrast table (2)
	8	Software License Notice	See Contrast table (2)
	9	Software License Notice	See Contrast table (2)
	10	Software License Notice	See Contrast table (2)
NSP	11	1..License Key Card Assy	DEA1046
NSP	12	2..Leaflet	DRM1410
NSP	13	2..License Key Label Assy	DXA2304
	14	•••••	
NSP	15	Warranty Card	See Contrast table (2)
NSP	16	Polyethylene Bag	AHG7117
	17	Handle	DEC3783
	18	Spacer	DEC3784
	19	Packing Pad	DHA1984
	20	Packing Pad	DHA1985
	21	Partition	DHC1104
	22	Packing Case	See Contrast table (2)
	23	Packing Sheet	RHC1023
	24	Packing Pad	DHA1988
	25	Label	See Contrast table (2)

(2) CONTRAST TABLE

XDJ-RR/AXJ, FWLPWXJ, SYXJ and UXJCB are constructed the same except for the following:

Mark	No.	Symbol and Description	XDJ-RR /AXJ	XDJ-RR /FWLPWXJ	XDJ-RR /SYXJ	XDJ-RR /UXJCB
⚠	3	Power Cord	ADG7079	ADG1154	ADG1154	XDG3052
	4	Operating Instructions (Quick Start Guide)(En, Fr)	Not used	Not used	Not used	DRH1515
	5	Operating Instructions (Quick Start Guide) (En, Fr, De, It, Ne, Es, Po, Ru)	Not used	Not used	DRH1516	Not used
	6	Operating Instructions (Quick Start Guide)(En, Es)	Not used	DRH1517	Not used	Not used
	7	Operating Instructions (Quick Start Guide)(Zhcn)	DRH1518	Not used	Not used	Not used
	8	Software License Notice	Not used	DRH1451	DRH1451	DRH1451
	9	Software License Notice	Not used	Not used	DRH1452	DRH1452
	10	Software License Notice	DRH1453	Not used	Not used	Not used
NSP	15	Warranty Card	Not used	Not used	DRY1270	Not used
	22	Packing Case	DHG3647	DHG3646	DHG3646	DHG3646
	25	Label	Not used	DRW2774	Not used	DRW2773

9.2 BOTTOM SECTION

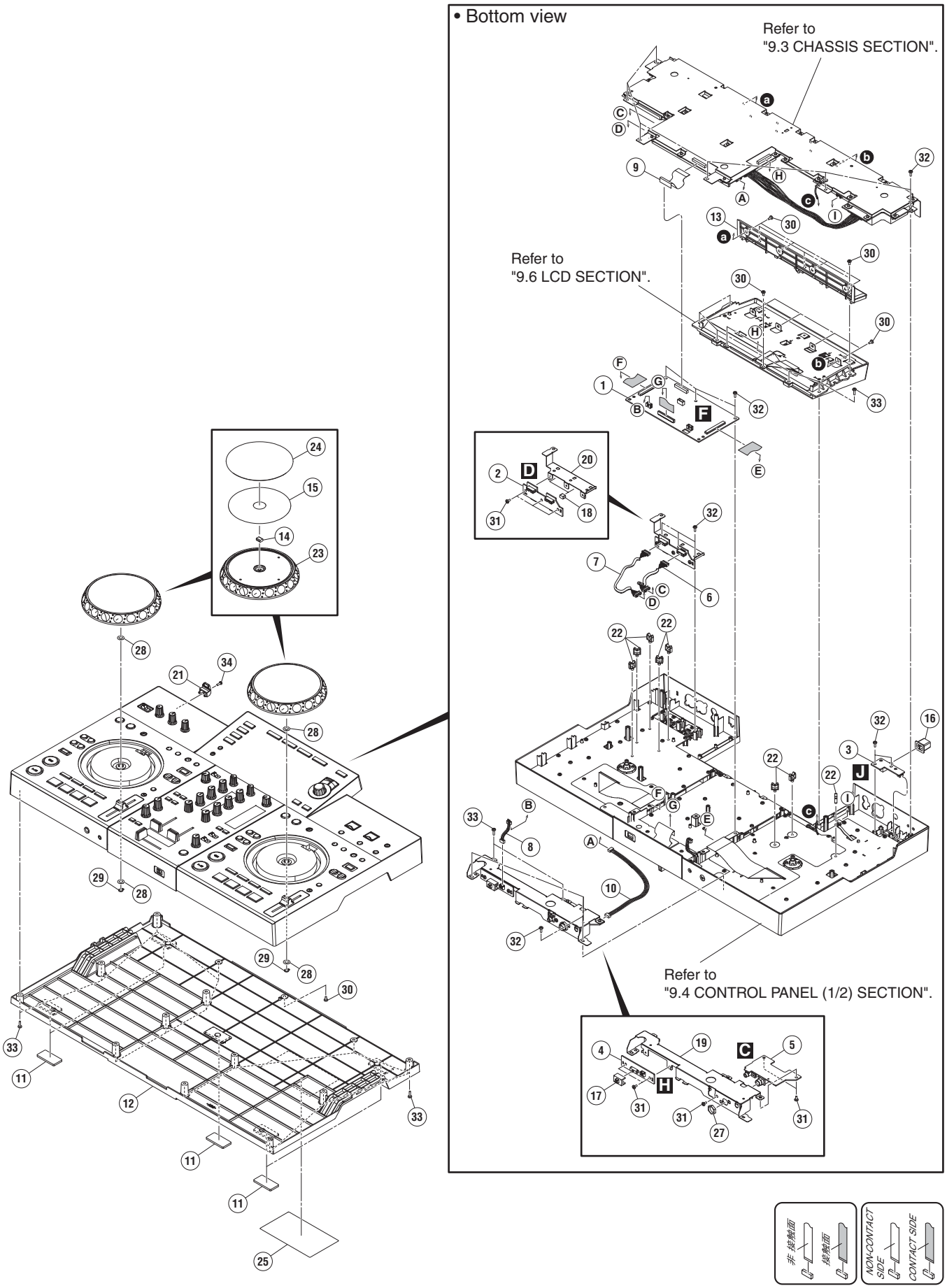

(1) BOTTOM SECTION PARTS LIST

Mark	No.	Description	Part No.
	1	UCOM Assy	DWX4167
	2	USBB Assy	DWX4169
	3	PSWB Assy	DWX4171
	4	CRVB Assy	DWX4172
	5	HPJK Assy	DWX4174
	6	Shielded Conn-Cable	DDA1087
	7	Shielded Conn-Cable	DDA1088
	8	Crimp Connector	DDC1031
	9	FFC	DDD1874
	10	Connector Assy	PF04PP-D22
	11	Sheet/Leg	DEC3534
⚠	12	Chassis	DNK6770
	13	Cover	DNK6773
	14	Gasket/JOG	DEC3539
	15	DS Tape/JOG	DEH1042
	16	Power Knob	DAC2306
	17	Cap	DAC3284
	18	Gasket/JOG	DEC3562
	19	Stay	DNH3359
	20	Stay	DNH3360
	21	Hook	DNK6755
	22	Holder	VEC1355
	23	JOG Dial	DNK6763
	24	Plate	DAH3222
NSP	25	Name Label	See Contrast table (2)
	26	•••••	
	27	Nut M12	DBN1018
	28	Washer	WA62D095D050
	29	Washer	YC60FAC
	30	Screw	BBZ30P060FTB
	31	Screw	BBZ30P060FTC
	32	Screw	BPZ30P080FNI
	33	Screw	BPZ30P100FTB
	34	Screw	PPZ30P080FTB

(2) CONTRAST TABLE

XDJ-RR/AXJ, FWLPWXJ, SYXJ and UXJCB are constructed the same except for the following:

Mark	No.	Symbol and Description	XDJ-RR /AXJ	XDJ-RR /FWLPWXJ	XDJ-RR /SYXJ	XDJ-RR /UXJCB
NSP	25	Name Label	DRW2772	DRW2771	DRW2771	DRW2771

9.3 CHASSIS SECTION

• Bottom view

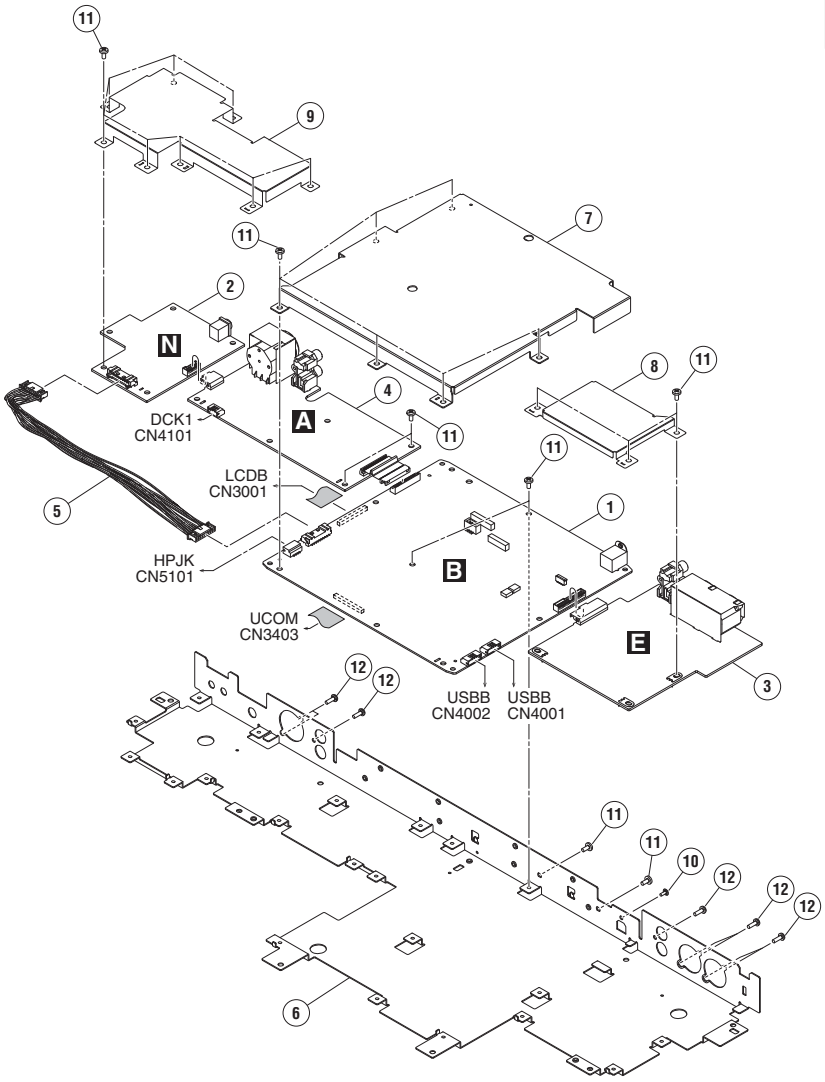

CHASSIS SECTION PARTS LIST

Mark	No.	Description	Part No.
	1	MAIN Assy	DWX4165
	2	DCIN Assy	DWX4168
	3	AOUT Assy	DWX4176
	4	AINB Assy	DWX4178
	5	Crimp Connector	DDC1029
	6	Stay	DNH3355
	7	Shield Case	DNH3363
	8	Shield Case	DNH3364
	9	Shield Case	DNH3365
	10	Screw (M3*5)	DBA1340
	11	Screw	BBZ30P060FTC
	12	Screw	PPZ30P080FTB

9.4 CONTROL PANEL SECTION (1/2)

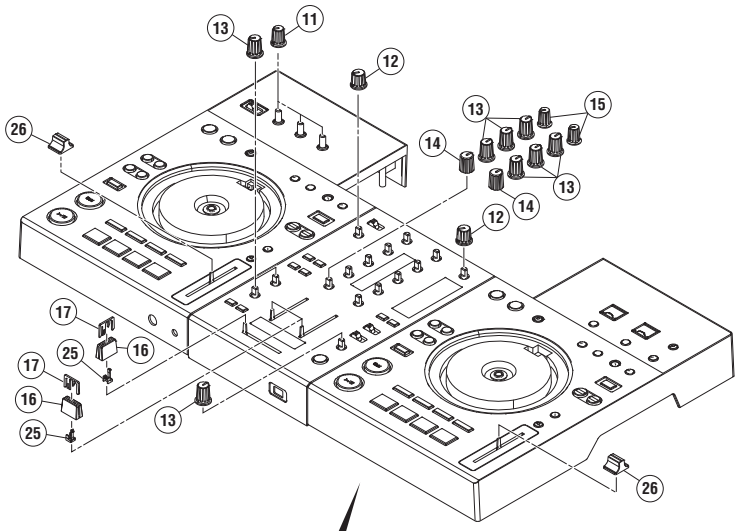

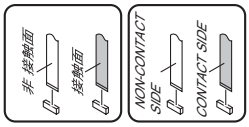

• Bottom view

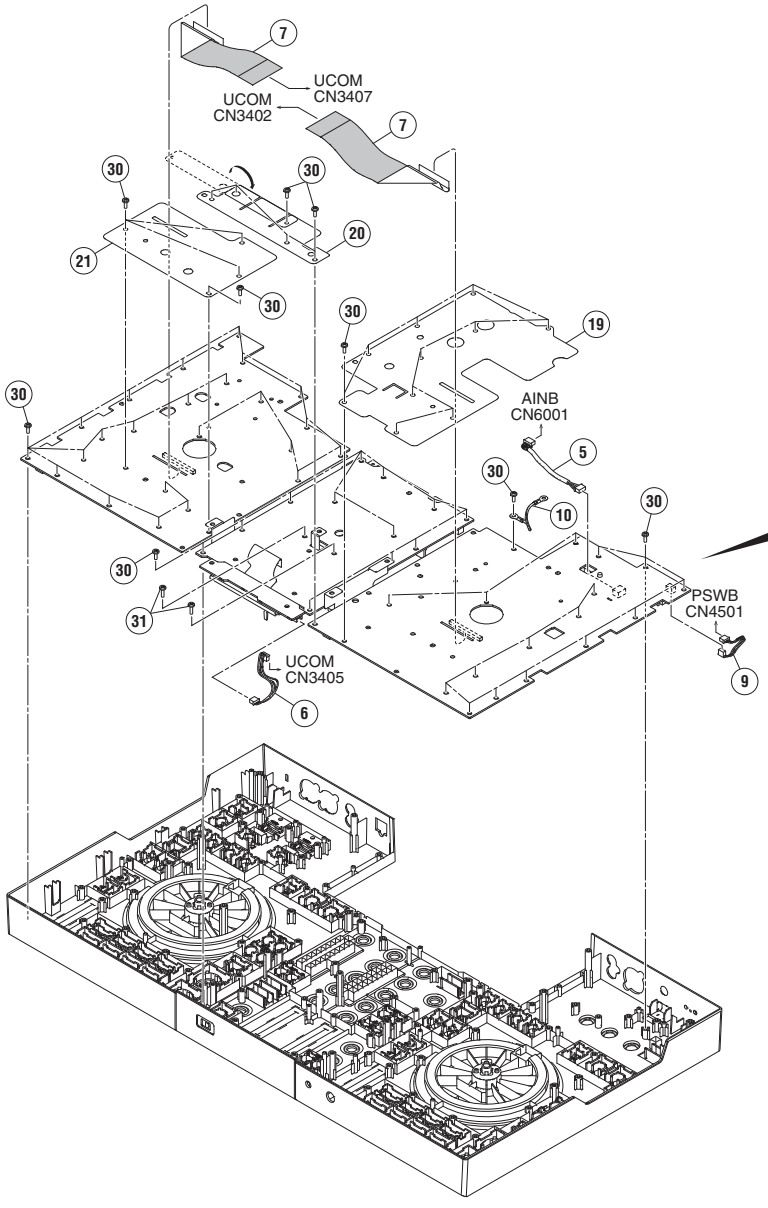

DCK1 Assy

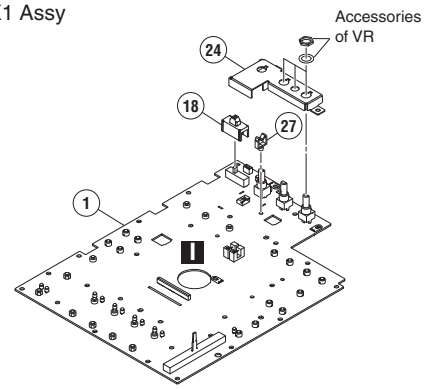

MXRB Assy

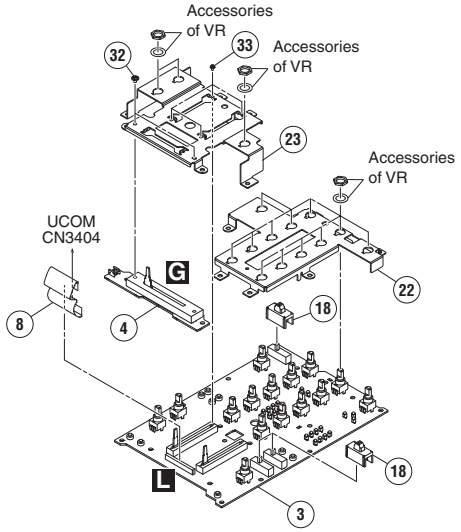

DCK2 Assy

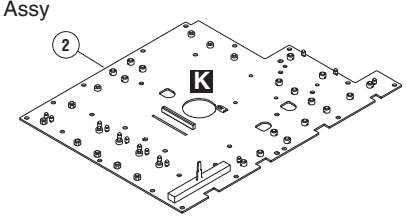

CONTROL PANEL SECTION (1/2) SECTION PARTS LIST

Mark No.	Description	Part No.
1	DCK1 Assy	DWX4170
2	DCK2 Assy	DWX4173
3	MXRB Assy	DWX4175
4	CRFD Assy	DWX4177
5	Shielded Conn-Cable	DDA1089
6	Crimp Connector	DDC1030
7	FFC	DDD1870
8	FFC	DDD1871
9	Connector Assy	PF03PP-B05
10	Earth Lead Unit	DE005VC0
11	Knob/LBK	DAA1284
12	Knob	DAA1360
13	Knob	DAA1361
14	Knob	DAA1366
15	Knob	DAA1392
16	Slider Knob 1	DAC2684
17	Slider Knob 2	DAC2685
18	SW Cap	DAC2753
19	Barrier	DEC3802
20	Barrier	DEC3803
21	Barrier	DEC3810
22	Stay	DNH3356
23	Stay	DNH3357
24	Stay	DNH3358
25	Stopper/SLD	DNK6009
26	Knob	DNK6769
27	Holder	VEC1355
28	•••••	
29	•••••	
30	Screw	BPZ30P080FNI
31	Screw	BPZ30P100FTB
32	Screw	IMZ30P040FTC
33	Screw	PMH20P040FTC

9.5 CONTROL PANEL SECTION (2/2)

• Bottom view

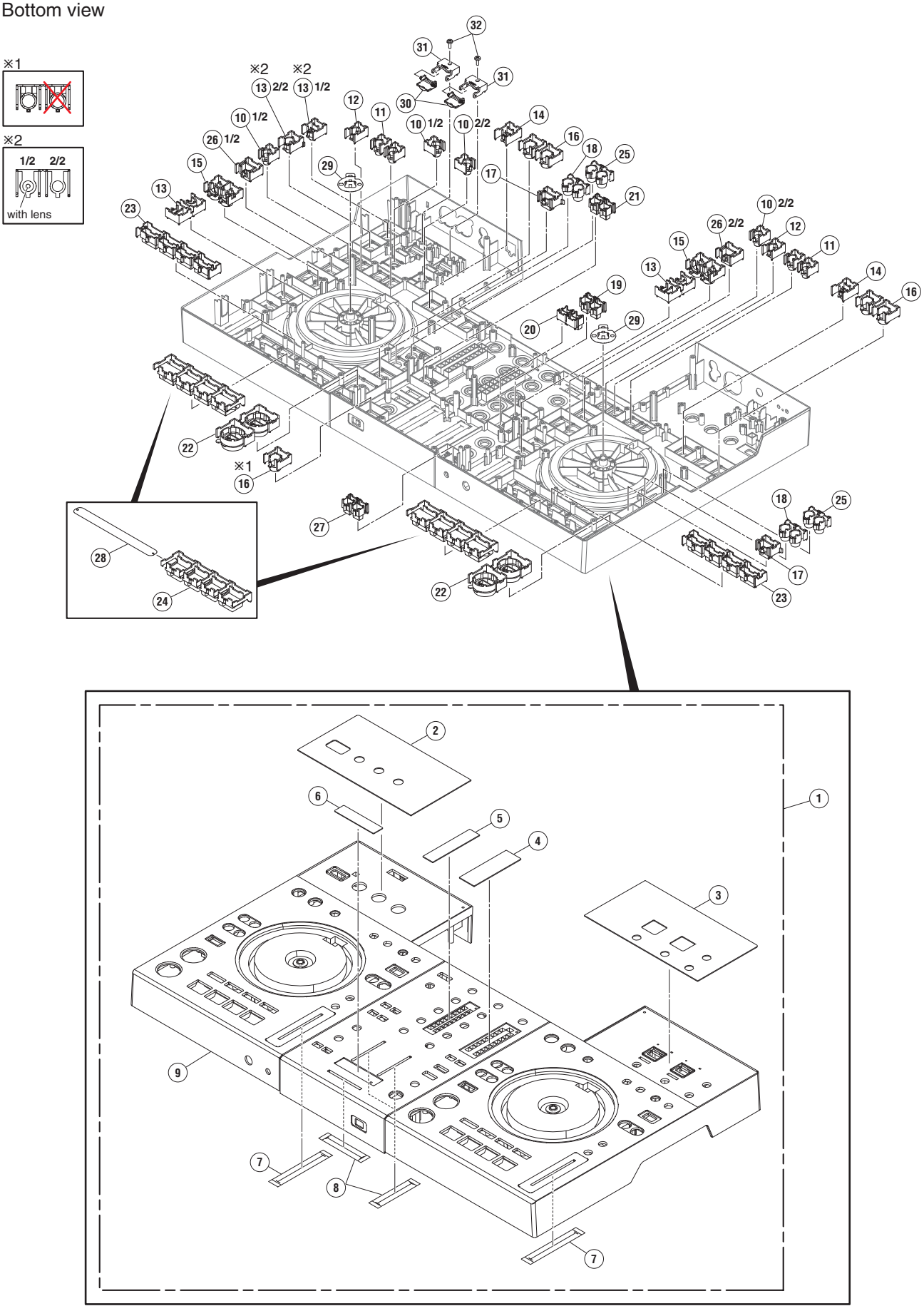

CONTROL PANEL SECTION (2/2) SECTION PARTS LIST

Mark	No.	Description	Part No.
⚠	1	1..XDJ-RR Panel Service Assy	DEA1089
	2	2..Plate	DAH3218
	3	2..Plate	DAH3219
	4	2..Plate	DAH3220
	5	2..Plate	DAH3221
	6	2..Plate	DAH3223
	7	2..Packing/TMP	DEC3392
	8	2..Sheet	DEC3795
⚠ NSP	9	2..Control Panel	DNK6771
	10	Button/TMP	DAC2845
	11	Button/CAL	DAC3020
	12	Button/DLT	DAC3021
	13	Button/MT	DAC3029
	14	Button/REL	DAC3030
	15	Button/SYN	DAC3032
	16	Button/LOP	DAC3074
	17	Button	DAC3288
	18	Button	DAC3363
	19	Button	DAC3370
	20	Button	DAC3371
	21	Button	DAC3372
	22	Button	DAC3409
	23	Button	DAC3410
	24	Button	DAC3411
	25	Button	DAC3413
	26	Button	DAC3414
	27	Button	DAC3415
	28	Diffuser	DEC3804
	29	Plate/CND	DNH3137
	30	Door	DNK6497
	31	Holder	DNK6710
	32	Screw	BPZ30P080FNI

9.6 LCD SECTION

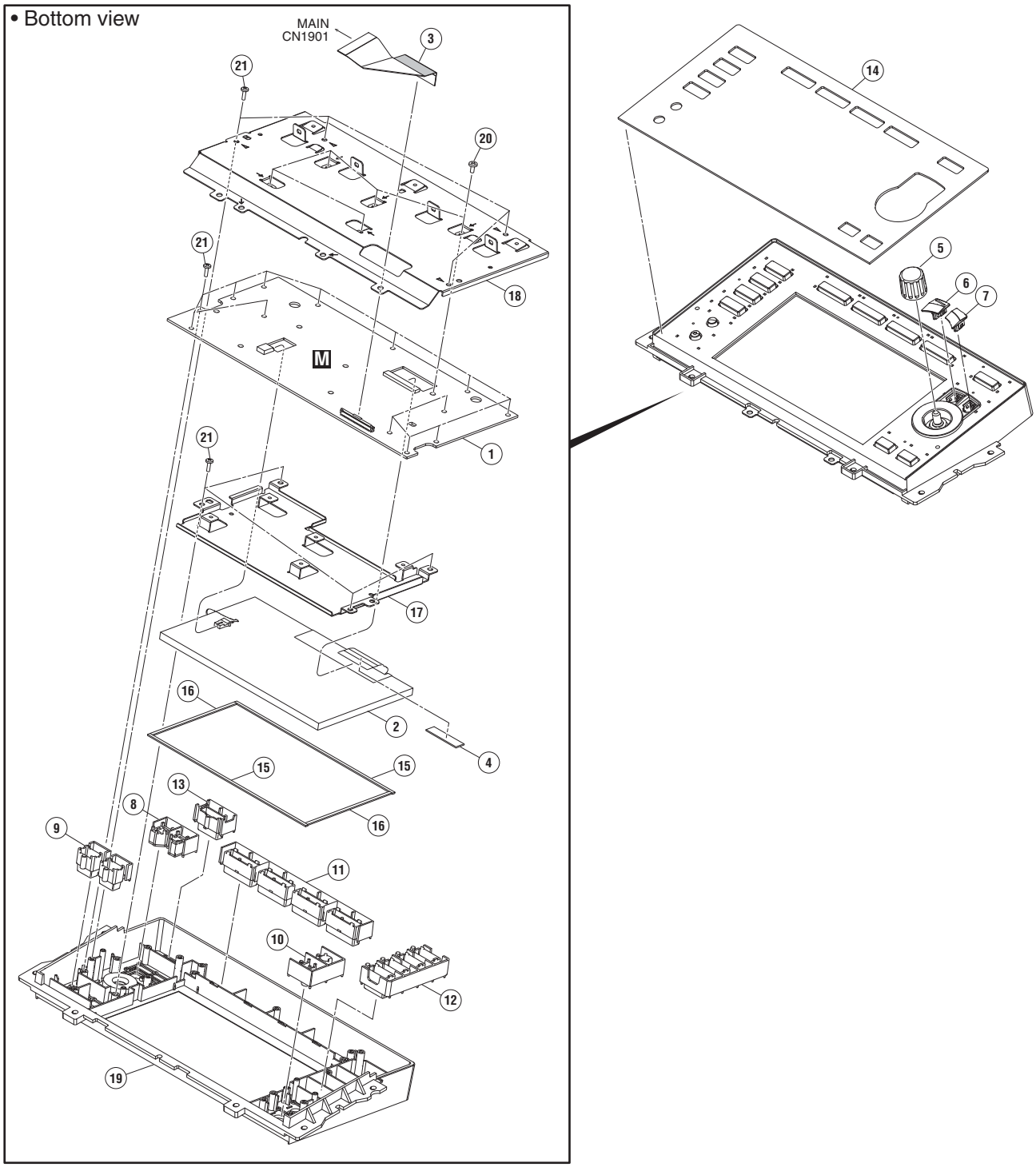

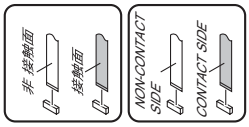

LCD SECTION PARTS LIST

Mark	No.	Description	Part No.
	1	LCDB Assy	DWX4166
	2	TFT LCD	CWX4352
	3	FFC	DDD1873
	4	Ferrite Clamper	DTX1011
	5	Dial Knob	DAA1246
	6	Button	DAC3113
	7	Button	DAC3118
	8	Button	DAC3289
	9	Button	DAC3290
	10	Button	DAC3291
	11	Button	DAC3292
	12	Button	DAC3293
	13	Button	DAC3412
	14	Window	DAH3217
	15	Packing/L	DEC3568
	16	Packing/S	DEC3569
	17	Stay	DNH3361
	18	Shield Case	DNH3362
⚠	19	Panel	DNK6772
	20	Screw	BBZ30P060FTB
	21	Screw	BPZ26P080FTC