9. EXPLODED VIEWS AND PARTS LIST

NOTES:
- *Parts marked by "NSP" are generally unavailable because they are not in our Master Spare Parts List.*
- *The ⚠ mark found on some component parts indicates the importance of the safety factor of the part. Therefore, when replacing, be sure to use parts of identical designation.*
- *Screws adjacent to ▼ mark on product are used for disassembly.*
- *For the applying amount of lubricants or glue, follow the instructions in this manual. (In the case of no amount instructions, apply as you think it appropriate.)*

9.1 PACKING SECTION

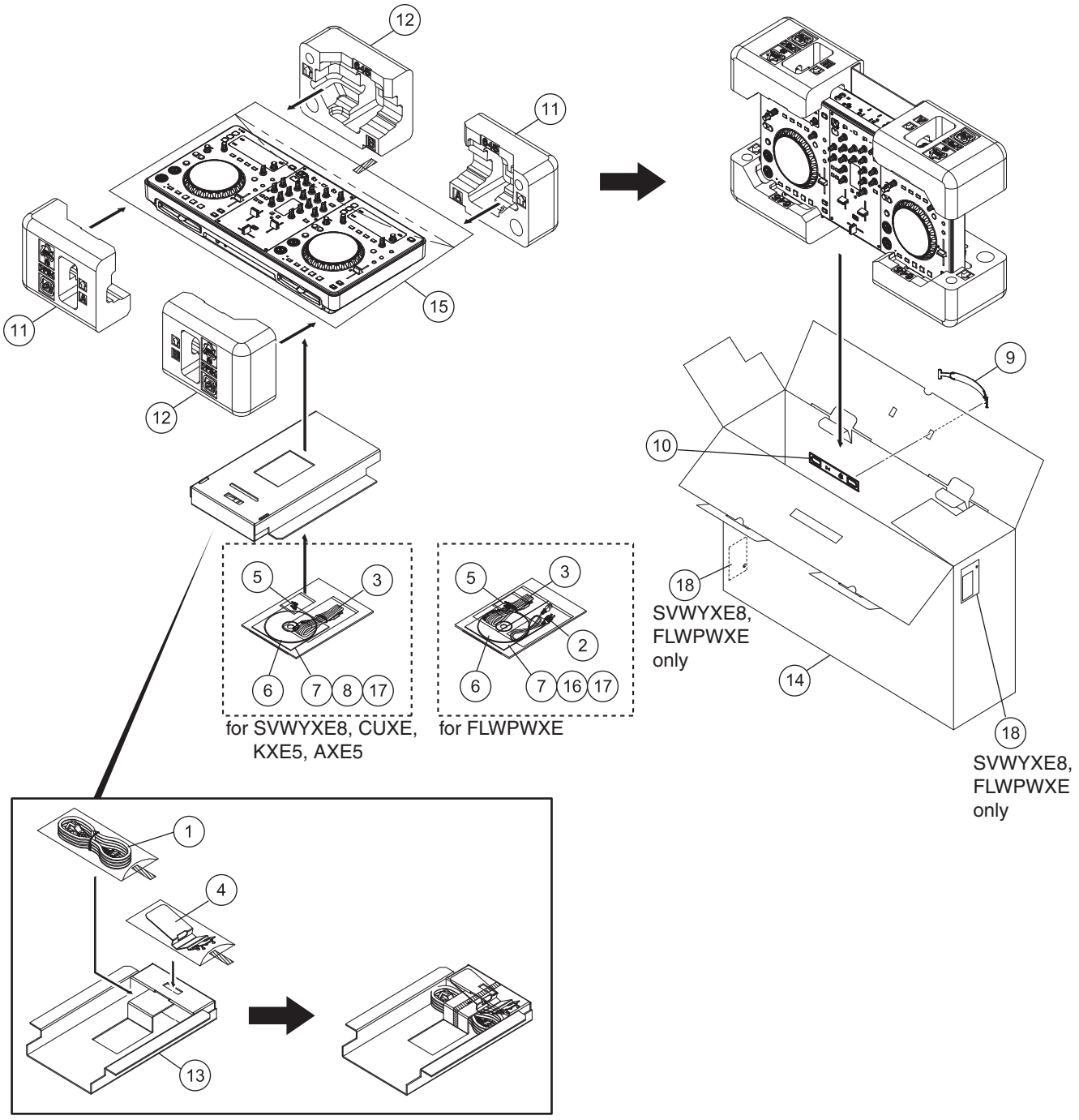

(1) PACKING SECTION PARTS LIST

Mark	No.	Description	Part No.
⚠	1	Power Cord	See Contrast table (2)
⚠	2	Power Cord	See Contrast table (2)
	3	USB Cable	408-100UG-087
	4	Smartphone Stand	703-COMBO-1395
	5	Smartphone Stand Mount Screws	200-BLACK-642
	6	CD-ROM	429-COMBO-144
	7	Read Before Use (Important)/ Quick Start Guide	See Contrast table (2)
	8	Leaflet	502-XDR1-3270
	9	Handle	100-SX-3017
	10	Handle Base	100-SX-3018
	11	Polyform A	506-COMBO-645A
	12	Polyform B	506-COMBO-645B
	13	Paste Board	507-COMBO-3367
	14	Gift Box	See Contrast table (2)
	15	Soft Bag	509-COMBO-319
	16	Caution Sheet	See Contrast table (2)
	17	About SSIDs and Passwords	501-XJR1-2506
	18	Label	See Contrast table (2)

(2) CONTRAST TABLE

XDJ-R1/SVWYXE8, CUXE, FLWPWXE, KXE5 and AXE5 are constructed the same except for the following:

Mark	No.	Symbol and Description	XDJ-R1 /SVWYXE8	XDJ-R1 /CUXE	XDJ-R1 /FLWPWXE	XDJ-R1 /KXE5	XDJ-R1 /AXE5
⚠	1	Power Cord	409-HDJ7100-055D-HA	409-HDJ7100-054D-HA	409-HDJ7100-055D-HA	409-COMBO-224	409-DMX101-218
⚠	2	Power Cord	Not used	Not used	409-COMBO-226	Not used	Not used
	7	Read Before Use (Important)/ Quick Start Guide	502-XDR1B-3272	502-XDR1A-3271	502-XDR1F-3276	502-XDR1E-3275	502-XDR1D-3274
	14	Gift Box	507-R1B-3401	507-R1A-3401	507-R1F-3401	507-R1E-3401	507-R1D-3401
	16	Caution Sheet	Not used	Not used	502-XDR1F-3321	Not used	Not used
	18	Label	501-XJR1B-2576	Not used	501-XJR1B-2576	Not used	Not used

9.2 EXTERIOR SECTION

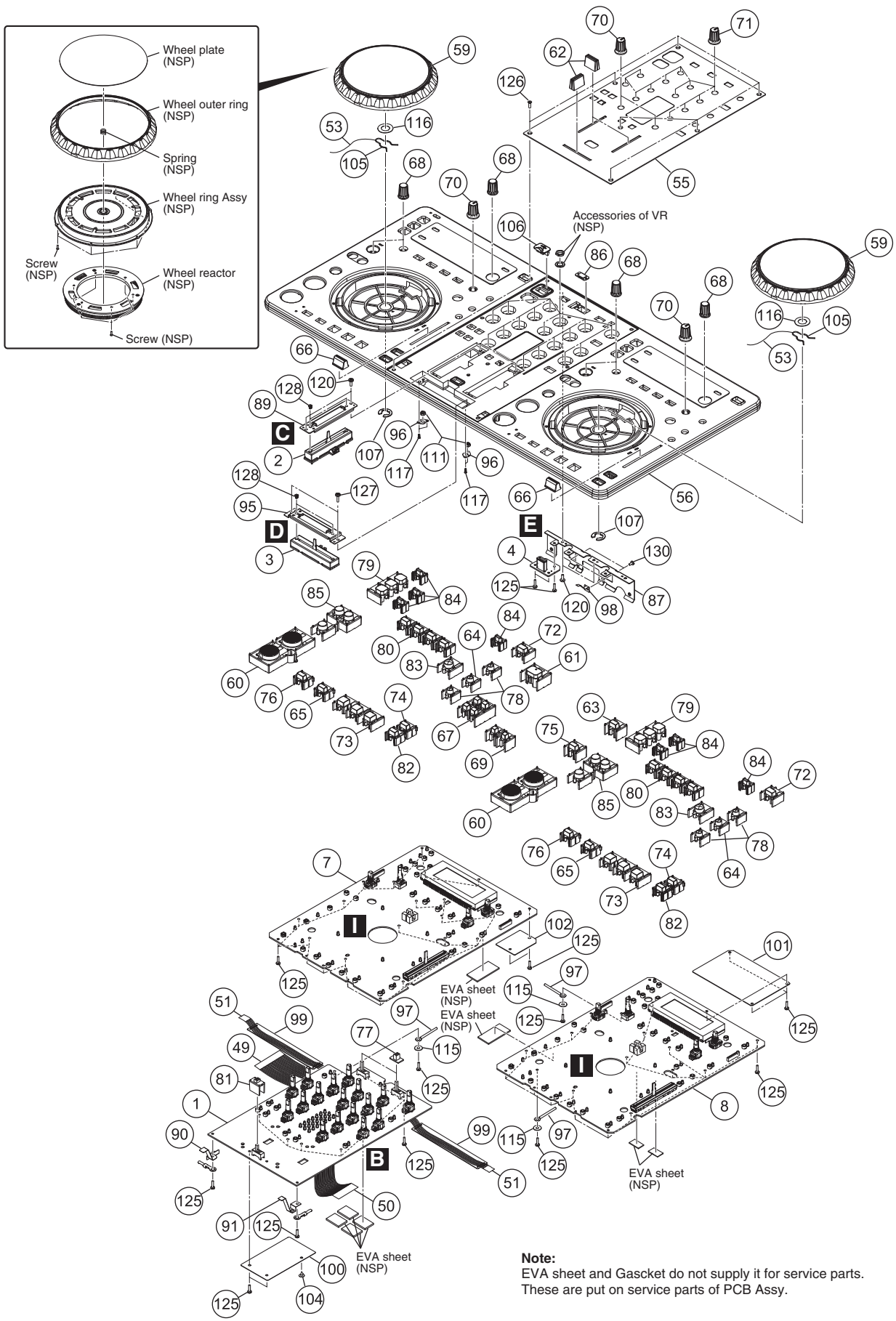

Note:
EVA sheet and Gascket do not supply it for service parts.
These are put on service parts of PCB Assy.

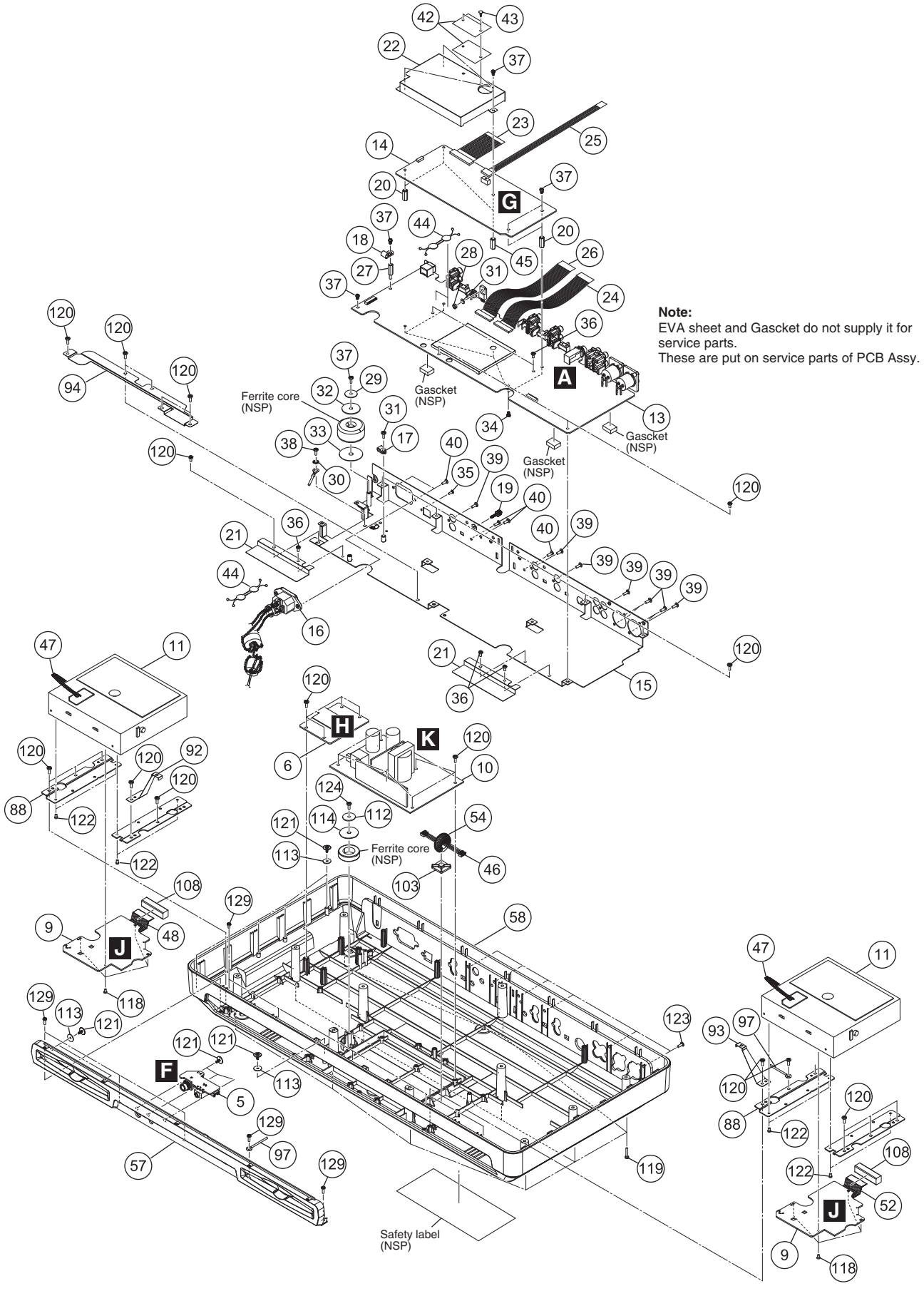
Note:
EVA sheet and Gascket do not supply it for service parts.
These are put on service parts of PCB Assy.
Ferrite core (NSP)
Gascket (NSP)
Safety label (NSP)

(1) EXTERIOR SECTION PARTS LIST

Mark	No.	Description	Part No.
	1	MIXER Assy	704-COMBO-A376
	2	CH Assy	704-COMBO-A482
	3	CROSS FADER Assy	704-COMBO-A499
	4	USB Assy	704-COMBO-A381
	5	PHONES Assy	704-COMBO-A379
	6	Wi-Fi PCB Assy	704-COMBO-A380
	7	CD1 Assy	704-COMBO-A375
	8	CD2 Assy	704-COMBO-A476
	9	SERVO Assy	704-COMBO-A377
	10	SWITCHING POWER	411-COMBO-887
	11	SLOT-IN FEEDER MECHA Assy	704-MCU300-9997-HA
	12	•••••	
	13	I/O Assy	704-COMBO-A378
	14	DSP & POWER Assy	704-COMBO-A531
	15	Rear Board Assy	703-COMBO-1377
⚠	16	AC Socket Assy	704-COMBO-A483
	17	Cord Bush	100-SDJ2-2553
	18	Cord Bush	100-K1-2682-HA
	19	Ground Terminal	200-100U-527
	20	Hexagon Pillar	200-COMBO-668
	21	Isolation Plate	300-COMBO-2063
	22	Isolation Plate	300-COMBO-2075
	23	26P FFC Cable	406-COMBO-1244
	24	24P FFC Cable	406-COMBO-1247
	25	8P FFC Cable	406-COMBO-1248
	26	24P FFC	406-COMBO-1255
	27	Spacer Support	504-COMBO-302
	28	Nut (M3*P0.5)	601-A100-004-HA
	29	Fixed Center Washer	606-C426-066
	30	Washer	606-4500-123
	31	Nylon Washer	606-500C-265
	32	Washer	606-COMBO-266
	33	Washer	606-COMBO-267
	34	Screw	602-B300-041-HA
	35	Screw	602-DD2220-301-HA
	36	Screw	602-SA12-377-HA
	37	Screw	602-SA12-380-HA
	38	Screw	602-ISOB408-543C
	39	Screw	602-PTS308-732B
	40	Screw	602-ISO308-735B
	41	•••••	
	42	Electrical Tape	501-COMBO-2216
	43	Canoe Clips (MB-1S)	504-HF6011-5011
	44	Fixed Loop (2A-8)	504-COMBO-300
	45	Spacer Support	504-QFX-204

Mark	No.	Description	Part No.
	46	4P Wire	404-COMBO-3772
	47	3P Wire	404-UJ300KM-3644-HA
	48	28P FFC Cable	406-COMBO-1245
	49	38P FFC Cable	406-COMBO-1249
	50	36P FFC Cable	406-COMBO-1250
	51	8P FFC Cable	406-COMBO-1251
	52	28P FFC Cable	406-MEP4-1201-HA
	53	Wire	406-S100-031
	54	Ferrite Core	415-VP9812-221-HA
	55	Mixer Panel Assy	703-XDJR1-1394
	56	Chassis Assy	701-XDJR1-5329
	57	Front Panel Assy	701-COMBO-5204
	58	Base Assy	See Contrast table (2)
	59	Wheel & Shaft Assy	701-COMBO-5294
	60	PLAY/CUE Button	701-XDJR1-5325
	61	USB Button Assy	701-XDJR1-5326
	62	Push Button	100-22-2824-HA
	63	AUX Button	100-AUX-2975
	64	Round Button	100-BLACK-2968S
	65	CALL Button	100-CALL-2967A
	66	Push Knob	100-CMX4-2906-HA
	67	Color Button	100-COLOR-2973S
	68	Encoder Knob	100-COMBO-2962
	69	CUE Button	100-CUE-2974
	70	Rotary Knob	100-DJM100-2826-HA
	71	Rotary Knob	100-DJM250-2826-HA
	72	Eject Button	100-EJECT-2970
	73	HOTCUE Button	100-HOTCUE-2971S
	74	MASTER Button	100-MASTER-2967A
	75	MIC Button	100-MIC-2975
	76	MODE Button	100-MODE-2967A
	77	Push Button	100-MX200-2706-HA
	78	Round Button	100-ROUND-2968
	79	Source Button	100-SOURCE-2966
	80	SQUERE Button	100-SQUARE-2967
	81	Push Button	100-SW-2980S
	82	SYNC Button	100-SYNC-2967A
	83	TAP Button	100-TAP-2969
	84	TINY Button	100-TINY-2965S
	85	TRACK Button	100-TRACK-2964
	86	Wi-Fi Lens	100-WIFI-2979
	87	Transfer Plate	300-COMBO-2034
	88	Mecha Fixed Plate	300-COMBO-2036
	89	CH Fixed Plate	300-COMBO-2038
	90	Ground Plate L	300-COMBO-2064

Mark	No.	Description	Part No.
	91	Ground Plate R	300-COMBO-2065
	92	Ground Plate L	300-COMBO-2066
	93	Ground Plate R	300-COMBO-2067
	94	Join Plate	300-COMBO-2072
	95	Fixed Plate	300-DJM100-1960-HA
	96	Cover	300-DMX101-1993
	97	Locking Cable Clip	300-HM510B-224
	98	Ground Plate	300-SPINU2-1692
	99	Isolation Slice	501-COMBO-2554
	100	Isolation Slice	501-COMBO-2555
	101	Segregate Sheet	501-COMBO-2564
	102	Segregate Sheet	501-COMBO-2568
	103	Adhesive Mount	504-HDJ7000-032
	104	Canoe Clips	504-HF6011-5011
	105	Spring	603-C304-335
	106	USB Cap	604-COMBO-605
	107	E Ring	606-C304-209
	108	Sponge	612-COMBO-462
	109	•••••	
	110	•••••	
	111	Nut	601-A100-004-HA
	112	Fixed Center Washer	606-C426-066
	113	Washer	606-COMBO-264
	114	Washer	606-COMBO-266
	115	Washer	606-KMD280-081-HA
	116	Washer	606-RMP25-257
	117	Screw	602-A700-494-HA
	118	Screw	602-DD2220-301-HA
	119	Screw	602-DJ3000-272
	120	Screw	602-DJ5500-452-HA
	121	Screw	602-DV300-5023
	122	Screw	602-H888F-308-HA
	123	Screw	602-ISO308-735B
	124	Screw	602-MK7-131-HA
	125	Screw	602-MK8-604
	126	Screw	602-PTF2609-710B
	127	Screw	602-SA12-380-HA
	128	Screw	602-SA12-414
	129	Screw	602-SL24F-099
	130	Screw	602-ST150-431

(2) CONTRAST TABLE

XDJ-R1/SVWYXE8, CUXE, FLWPWXE, KXE5 and AXE5 are constructed the same except for the following:

Mark	No.	Symbol and Description	XDJ-R1 /SVWYXE8	XDJ-R1 /CUXE	XDJ-R1 /FLWPWXE	XDJ-R1 /KXE5	XDJ-R1 /AXE5
	58	Base Assy	701-COMBO-5206	701-COMBO-5205	701-COMBO-5340	701-COMBO-5339	701-COMBO-5338