9. EXPLODED VIEWS AND PARTS LIST

NOTES:
- *Parts marked by "NSP" are generally unavailable because they are not in our Master Spare Parts List.*
- *The ⚠ mark found on some component parts indicates the importance of the safety factor of the part. Therefore, when replacing, be sure to use parts of identical designation.*
- *Screws adjacent to ▼ mark on product are used for disassembly.*
- *For the applying amount of lubricants or glue, follow the instructions in this manual. (In the case of no amount instructions, apply as you think it appropriate.)*

9.1 PACKING SECTION

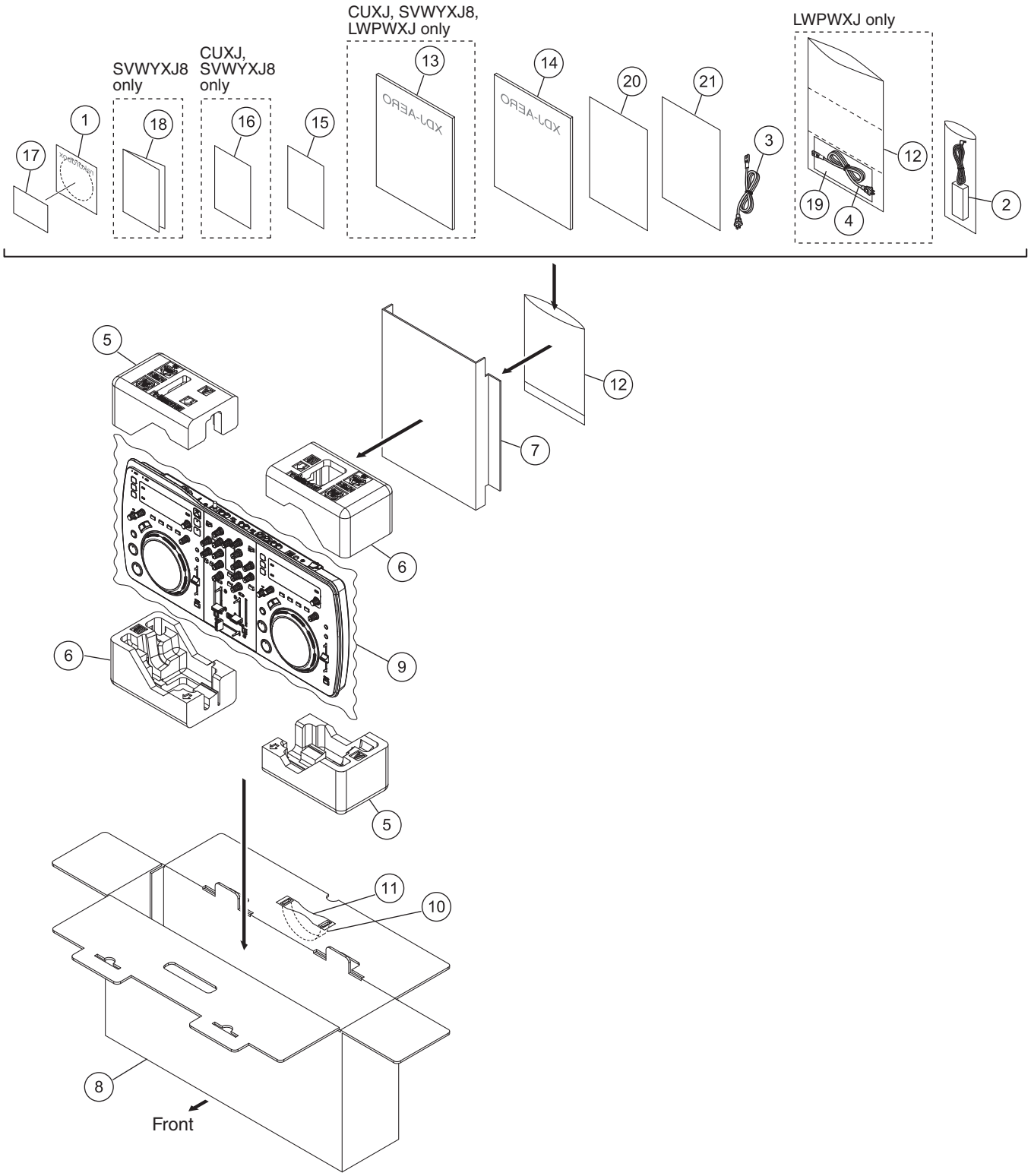

(1) PACKING SECTION PARTS LIST

Mark	No.	Description	Part No.
	1	CD-ROM including rekordbox, the driver software and operating instructions (rekordbox license key affixed)	See Contrast table (2)
⚠	2	AC Adapter	See Contrast table (2)
⚠	3	Power Cord	See Contrast table (2)
⚠	4	Power Cord	See Contrast table (2)
	5	Pad/A	DHA1888
	6	Pad/B	DHA1889
	7	Pad/ACC	DHA1890
	8	Packing Case	See Contrast table (2)
	9	Packing Sheet	RHC1023
	10	Plastic Handle (PE)	VEC2292
	11	Spacer (PE)	VEC2293
NSP	12	Polyethylene Bag	AHG7117
	13	Quick Start Guide	See Contrast table (2)
	14	Read Before Use (Important)	See Contrast table (2)
	15	Notice on software licenses	See Contrast table (2)
	16	Notice on software licenses	See Contrast table (2)
NSP	17	Label/L K	DRW2484
NSP	18	Warranty Card	See Contrast table (2)
	19	Caution Card SB	See Contrast table (2)
	20	Version Up Guide	DRH1180
	21	SSID, Password Guide	DRH1197

(2) CONTRAST TABLE

XDJ-AERO/CUXJ, SVWYXJ8, LWPWXJ, KXJ5 and AXJ5 are constructed the same except for the following:

Mark	No.	Symbol and Description	XDJ-AERO /CUXJ	XDJ-AERO /SVWYXJ8	XDJ-AERO /LWPWXJ	XDJ-AERO /KXJ5	XDJ-AERO /AXJ5
	1	CD-ROM including rekordbox, the driver software and operating instructions (rekordbox license key afficed)	DXX2715	DXX2715	DXX2715	DXX2716	DXX2716
⚠	2	AC Adapter	DWR1522 or DWR1523 or DWR1524	DWR1523 or DWR1524	DWR1523 or DWR1524	DWR1524	DWR1524
⚠	3	Power Cord	XDG3052	ADG1154	ADG1154	ADG7113	ADG7079
⚠	4	Power Cord	Not used	Not used	ADG7097	Not used	Not used
	8	Packing Case	DHG3118	DHG3117	DHG3119	DHG3122	DHG3120
	13	Quick Start Guide	DRH1167	DRH1167	DRH1167	Not used	Not used
	14	Read Before Use (Important)	DRH1171	DRH1170	DRH1172	DRH1169	DRH1168
	15	Notice on software licenses	DRH1174	DRH1174	DRH1174	DRH1175	DRH1175
	16	Notice on software licenses	DRH1198	DRH1198	Not used	Not used	Not used
NSP	18	Warranty Card	Not used	ARY7158	Not used	Not used	Not used
	19	Caution Card SB	Not used	Not used	ARM7064	Not used	Not used

9.2 CHASSIS SECTION

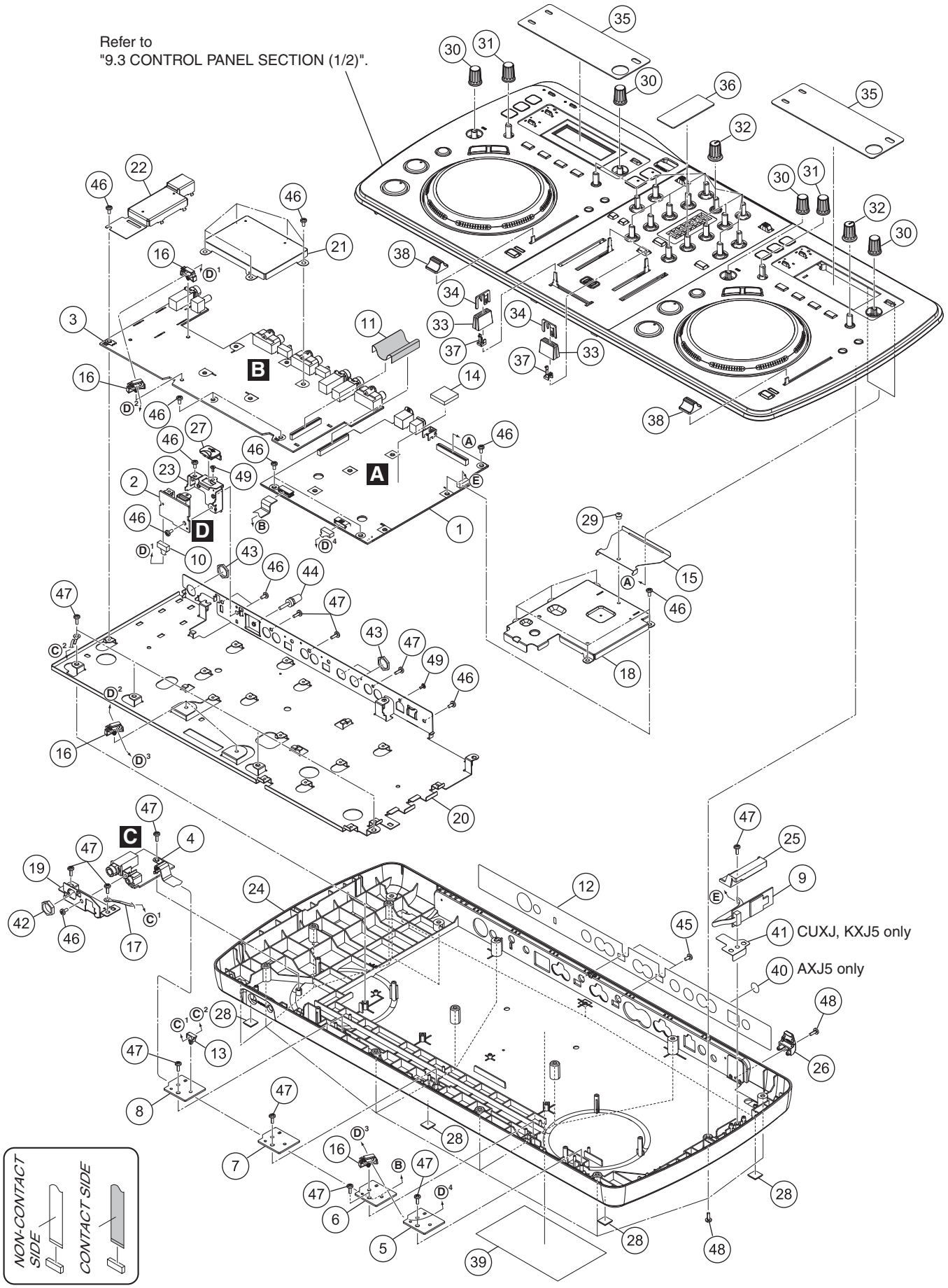

(1) CHASSIS SECTION PARTS LIST

Mark	No.	Description	Part No.
	1	MAIN Assy	DWX3313
	2	USBB Assy	DWX3374
	3	JACB Assy	DWX3354
	4	HPJK Assy	DWX3355
	5	HOLD1 Assy	DWX3396
	6	HOLD2 Assy	DWX3397
	7	HOLD3 Assy	DWX3398
	8	HOLD4 Assy	DWX3399
	9	Wi-Fi Module	DXF1015
	10	Shielded Conn-Cable	DDA1046
	11	FFC/39P	DDD1613
	12	Rear Panel	See Contrast table (2)
	13	Locking Mini Clamp	DEC2439
	14	Sheet	DEC2694
	15	Sheet/PRT	DEC3409
	16	Cord Clamper	DEC3437
NSP	17	Cord With Plug	DE010VE0
	18	Shield Case/FE1	DNH3031
	19	Stay/FRT	DNH3032
	20	Stay/PCB	DNH3033
	21	Shield Case/FE2	DNH3036
	22	Shield Case/FE3	DNH3041
	23	Stay/USB	DNH3043
	24	Chassis	DNK6082
	25	Holder/WF	DNK6083
	26	Hook/CRD	DNK6084
	27	Cover/USB	DNK6092
	28	Rubber Foot	VEB1349
	29	Push Rivet	XEC3034
	30	Dial Knob S (B)	DAA1273
	31	Dial Knob S2 (B)	DAA1274
	32	Knob/LBK	DAA1284
	33	Slider Knob 1	DAC2684
	34	Slider Knob 2	DAC2685
	35	Panel/DSP	DAH2884
	36	Panel/LVL	DAH2885
	37	Slider Knob Stopper	DNK5888
	38	Knob/SLD	DNK6090
NSP	39	Label	See Contrast table (2)
NSP	40	CCC S Label	See Contrast table (2)
	41	Leaf Spring/WF	See Contrast table (2)
	42	Nut M12	DBN1018
	43	Nut (M12)	NKX2FNI
	44	Terminal Screw	AKE-031
	45	Screw	BBZ30P060FTB
	46	Screw	BBZ30P060FTC
	47	Screw	BPZ30P080FNI
	48	Screw	BPZ30P080FTB
	49	Screw (M3*5)	DBA1340

(2) CONTRAST TABLE

XDJ-AERO/CUXJ, SVWYXJ8, LWPWXJ, KXJ5 and AXJ5 are constructed the same except for the following:

Mark	No.	Symbol and Description	XDJ-AERO /CUXJ	XDJ-AERO /SVWYXJ8	XDJ-AERO /LWPWXJ	XDJ-AERO /KXJ5	XDJ-AERO /AXJ5
	12	Rear Panel	DAH2886	DAH2883	DAH2887	DAH2890	DAH2888
NSP	39	Label	DRW2519	DRW2518	DRW2520	DRW2518	DRW2518
NSP	40	CCC S Label	Not used	Not used	Not used	Not used	DRW2310
	41	Leaf Spring /WF	DBK1378	Not used	Not used	DBK1378	Not used

9.3 CONTROL PANEL SECTION (1/2)

• Bottom view

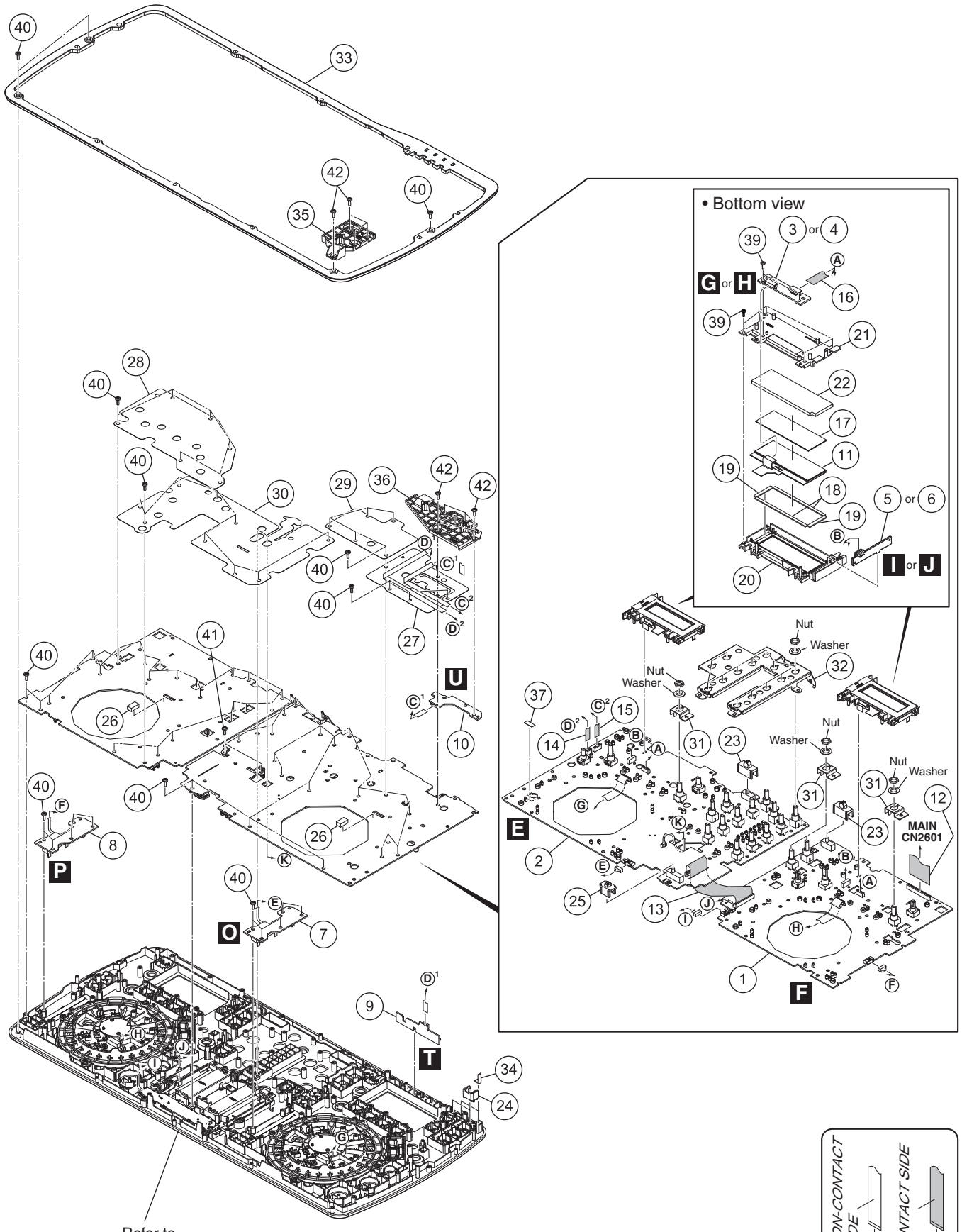

(1) CONTROL PANEL SECTION (1/2) PARTS LIST

Mark	No.	Description	Part No.
	1	EUPB Assy	See Contrast table (2)
	2	SUBB Assy	DWX3352
	3	CCNB1 Assy	DWX3388
	4	CCNB2 Assy	DWX3391
	5	BLED1 Assy	DWX3375
	6	BLED2 Assy	DWX3390
	7	TMPB1 Assy	DWS1446
	8	TMPB2 Assy	DWS1453
	9	WLED Assy	DWX3376
	10	PSWB Assy	DWS1442
	11	STN LCD	YAW5113
	12	FFC/39P	DDD1612
	13	FFC/31P	DDD1614
	14	FFC/5P	DDD1615
	15	FFC/9P	DDD1616
	16	FFC/9P	DDD1621
	17	Light-D Sheet	YNM5199
	18	Packing/L	DEC3416
	19	Packing/S	DEC3417
	20	Holder/LCD	DNK6122
	21	Cover/LCD	DNK6123
	22	Lighting Cond/LCD	DNK6125
	23	SW Cap	DAC2753
	24	Button/TIM	DAC2849
	25	Cap/FDR	DAC2858
	26	FFC Guard	DEC2586
	27	Sheet/PL1	DEC3465
	28	Sheet/PL2	DEC3411
	29	I-Shield Sheet	DEC3435
	30	Sheet/PL3	DEC3436
	31	VR Stay S	DNH2964
	32	Stay/VRL	DNH3035
	33	Panel/VSL	DNK6087
	34	Lens/PWR	DNK6089
	35	Plate/F	DNK6166
	36	Plate/R	DNK6167
NSP	37	Label	VRW1773
	38	•••••	
	39	Screw	BPZ20P060FTC
	40	Screw	BPZ30P080FNI
	41	Screw	BBZ30P060FTB
	42	Screw	BPZ30P100FTB

(2) CONTRAST TABLE

XDJ-AERO/CUXJ, SVWYXJ8, LWPWXJ, KXJ5 and AXJ5 are constructed the same except for the following:

Mark	No.	Symbol and Description	XDJ-AERO /CUXJ	XDJ-AERO /SVWYXJ8	XDJ-AERO /LWPWXJ	XDJ-AERO /KXJ5	XDJ-AERO /AXJ5
	1	EUPB Assy	DWX3351	DWX3400	DWX3351	DWX3400	DWX3400

9.4 CONTROL PANEL SECTION (2/2)

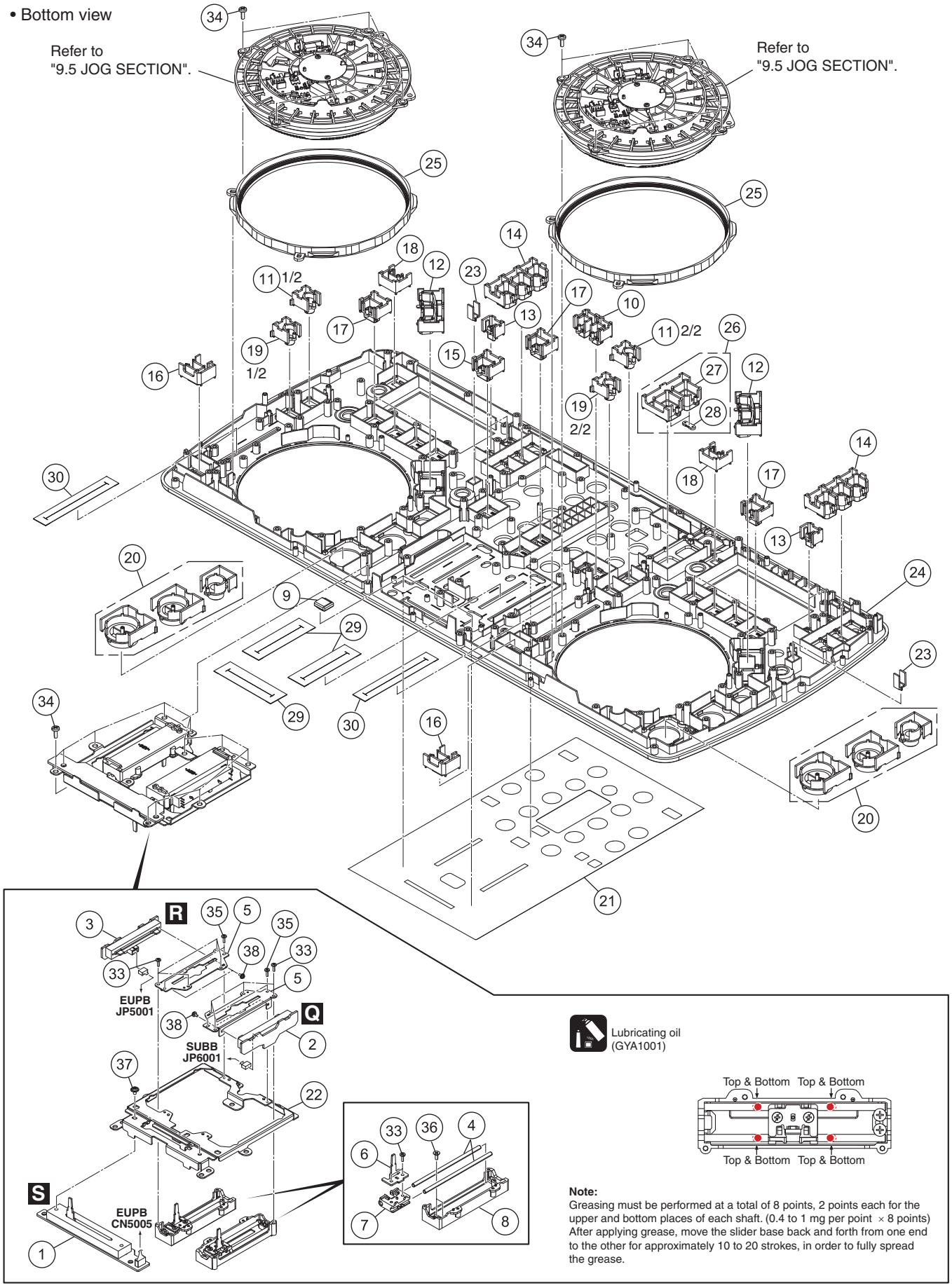

Note:
Greasing must be performed at a total of 8 points, 2 points each for the upper and bottom places of each shaft. (0.4 to 1 mg per point × 8 points) After applying grease, move the slider base back and forth from one end to the other for approximately 10 to 20 strokes, in order to fully spread the grease.

CONTROL PANEL SECTION (2/2) PARTS LIST

Mark	No.	Description	Part No.
	1	CRFD Assy	DWS1445
	2	CHFD1 Assy	DWS1444
	3	CHFD2 Assy	DWS1452
NSP	4	Guide Shaft (S)	DLA1918
	5	VR Stay	DNH2955
	6	Plate/LVR	DNH3034
	7	Slider Base	DNK5851
	8	Shaft Holder	DNK5852
	9	Gasket/JOG	DEC3415
	10	Button/HPC	DAC2843
	11	Button/TMP	DAC2845
	12	Button/JM	DAC2846
	13	Button/TIM	DAC2849
	14	Button/SEL	DAC2854
	15	Button/MIC	DAC2855
	16	Button/SYC	DAC2856
	17	Button/LVL	DAC2859
	18	Button/BCK	DAC2874
	19	Button/MT	DAC2875
	20	Button/PLY	DAC2876
	21	Plate/CTL	DAH2900
	22	Stay/FDR	DNH3037
	23	Lens	DNK5862
	24	Control Panel	DNK6086
	25	Lens/JOG	DNK6114
	26	1..USB Button Assy	DXA2249
	27	2..Button/USB	DAC2860
	28	2..LED Lens	DNK5553
	29	Fader Packing	DEC3355
	30	Slide VR Packing	DED1157
	31	•••••	
	32	•••••	
	33	Screw	BPZ20P060FTC
	34	Screw	BPZ30P080FNI
	35	Screw	BSZ20P040FTB
	36	Screw	CPZ26P080FTC
	37	Screw	IMZ30P040FTC
	38	Screw	PMH20P040FTC

9.5 JOG SECTION

• Bottom view

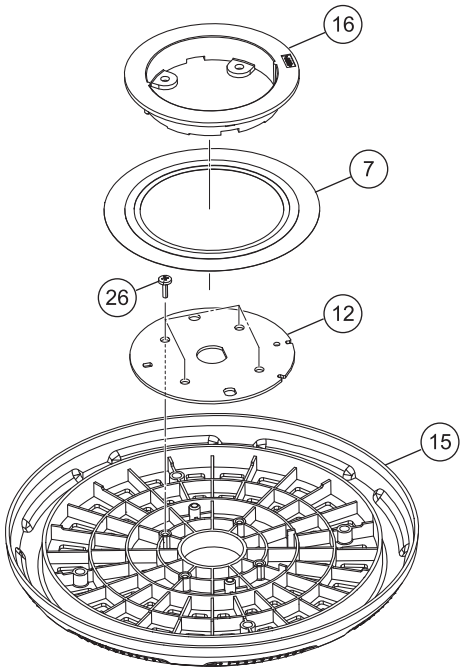

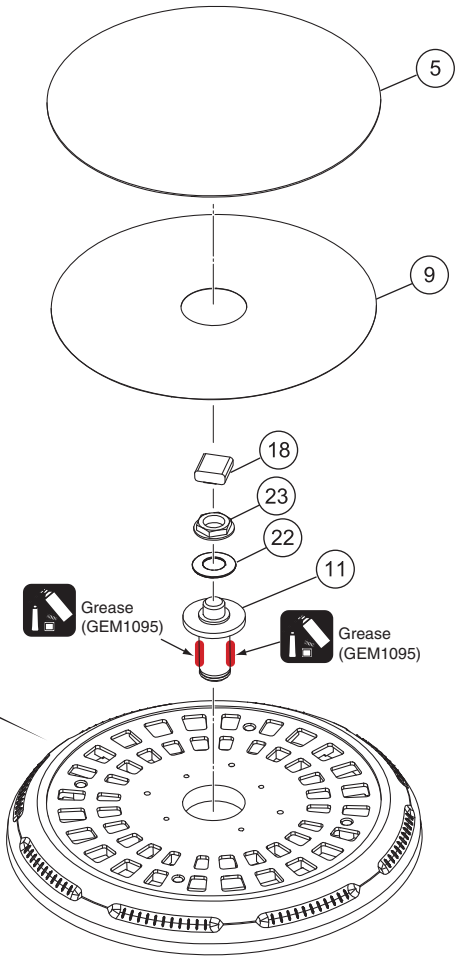

• Bottom view

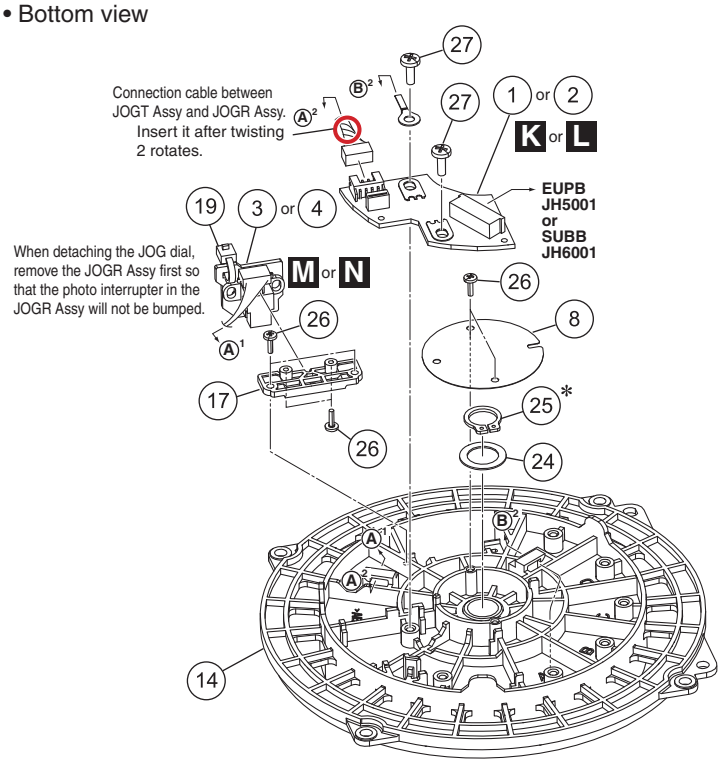

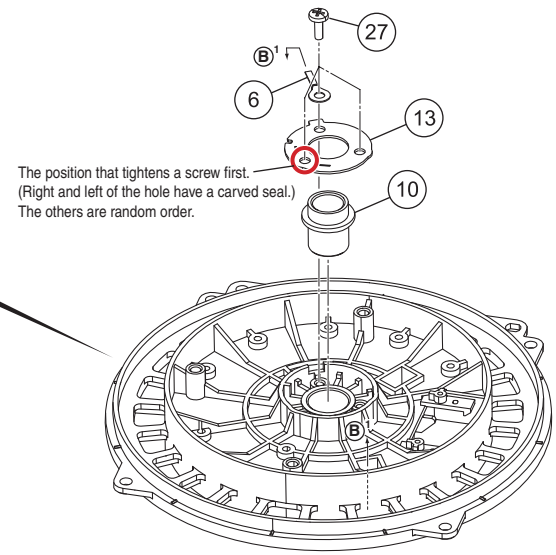

For Disassembly/Assembly of Washer (No. 25)

Please use the jig.
(Recommend Snap ring pryor.)



Insert the jig in the hole. Open the jig.

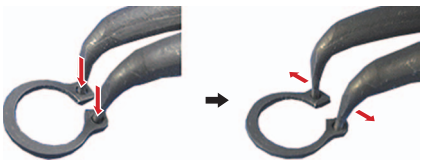

Washer is in the ditch.

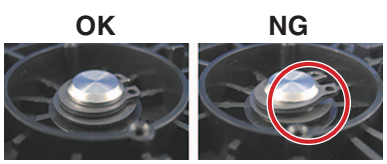

JOG SECTION PARTS LIST

Mark	No.	Description	Part No.
	1	JOGT1 Assy	DWX3353
	2	JOGT2 Assy	DWX3389
	3	JOGR1 Assy	DWS1441
	4	JOGR2 Assy	DWS1451
	5	Plate/JOG	DAH2880
	6	Lead Wire	DDB1095
	7	Slit/JOG	DEC3408
	8	Barrier/JOG	DEC3414
	9	DS Tape/JOG	DEH1042
	10	Sleeve/JOG	DLA2203
	11	Shaft/JOG	DLA2204
	12	Base/JOG	DNH3025
	13	Stay/JOG	DNH3039
	14	Holder/JOG	DNK6073
	15	JOG Dial	DNK6074
	16	Attachment/SLT	DNK6075
	17	Attachment/OEM	DNK6076
	18	Gasket/JOG	DEC3415
	19	Binder	ZCA-SKB90BK
	20	•••••	
	21	•••••	
	22	Spring Washer/M7	DBE1015
	23	Flange Nut M7	DBN1011
	24	Washer	WAX0D150D050
	25	Washer	YCX0FAC
	26	Screw	BPZ20P060FTC
	27	Screw	BPZ30P080FNI