9. EXPLODED VIEWS AND PARTS LIST

NOTES:
- *Parts marked by "NSP" are generally unavailable because they are not in our Master Spare Parts List.*
- *The ⚠ mark found on some component parts indicates the importance of the safety factor of the part. Therefore, when replacing, be sure to use parts of identical designation.*
- *Screws adjacent to ▼ mark on product are used for disassembly.*
- *For the applying amount of lubricants or glue, follow the instructions in this manual. (In the case of no amount instructions, apply as you think it appropriate.)*

9.1 PACKING SECTION

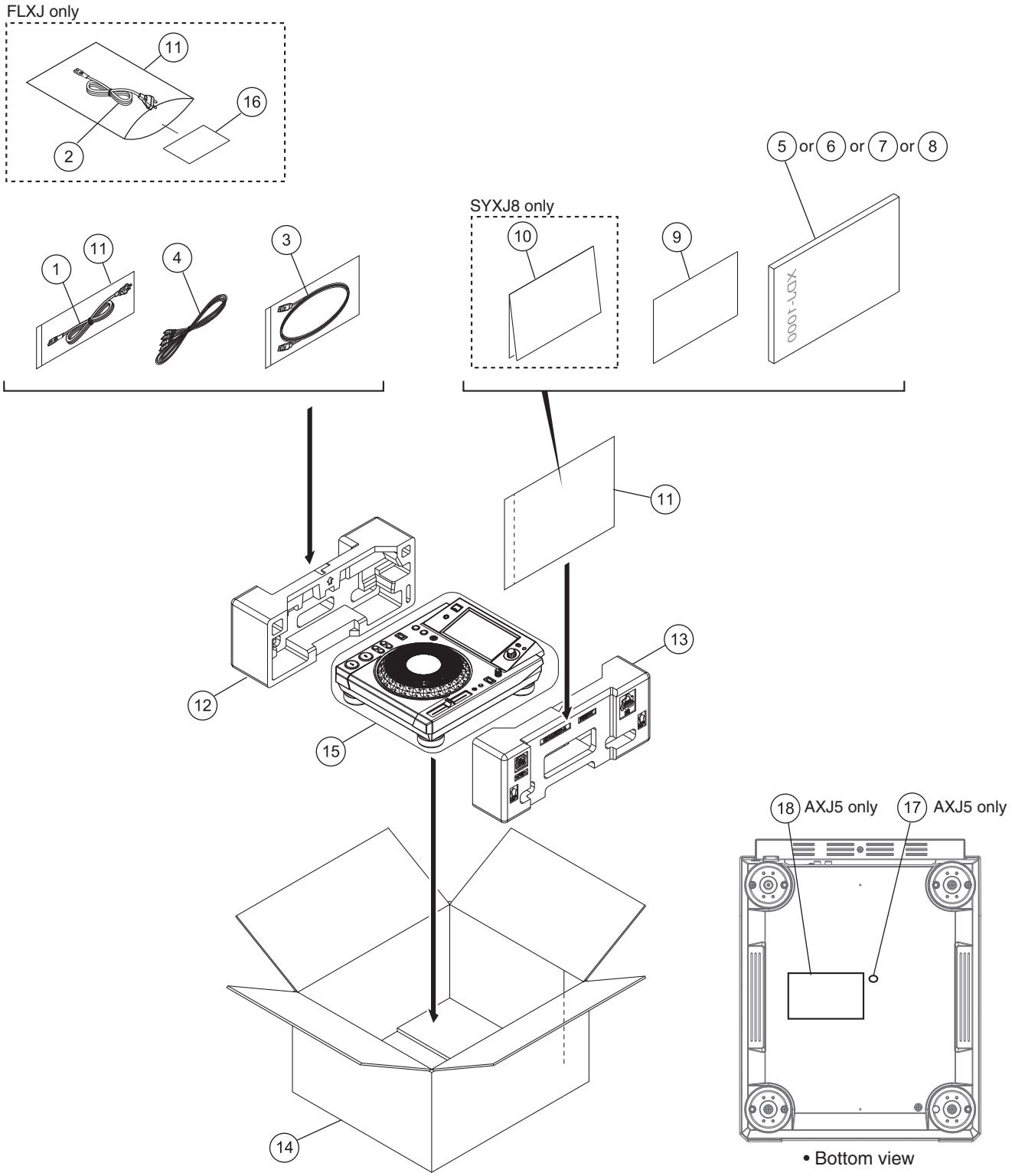

(1) PACKING SECTION PARTS LIST

Mark	No.	Description	Part No.
⚠	1	Power cord	See Contrast table (2)
⚠	2	Power cord	See Contrast table (2)
	3	LAN cable	DDE1141
	5	Audio cable	XDE3045
	5	Operating Instructions (Quick Start Guide)	See Contrast table (2)
	6	Operating Instructions (Quick Start Guide)	See Contrast table (2)
	7	Operating Instructions (Quick Start Guide)	See Contrast table (2)
	8	Operating Instructions (Quick Start Guide)	See Contrast table (2)
NSP	9	Leaflet	See Contrast table (2)
NSP	10	Warranty	See Contrast table (2)
NSP	11	Polyethylene Bag	AHG7117
	12	Pad/L	DHA1920
	13	Pad/R	DHA1921
	14	Packing Case	See Contrast table (2)
	15	Packing Sheet	RHC1023
	16	Caution Card SB	See Contrast table (2)
NSP	17	CCC S Label	See Contrast table (2)
NSP	18	Name Label	See Contrast table (2)

(2) CONTRAST TABLE

XDJ-1000/SYXJ8, UXJCB, FLXJ and AXJ5 are constructed the same except for the following:

Mark	No.	Symbol and Description	XDJ-1000 /SYXJ8	XDJ-1000 /UXJCB	XDJ-1000 /FLXJ	XDJ-1000 /AXJ5
⚠	1	Power cord	ADG1154	ADG7022	ADG1154	ADG7079
⚠	2	Power cord	Not used	Not used	ADG7097	Not used
	5	Operating Instructions (Quick Start Guide) (En, Fr, De, It, NI, Es, Pt, Ru)	DRH1278	Not used	Not used	Not used
	6	Operating Instructions (Quick Start Guide) (En)	Not used	DRH1277	Not used	Not used
	7	Operating Instructions (Quick Start Guide) (En, Es, Zhtw)	Not used	Not used	DRH1279	Not used
	8	Operating Instructions (Quick Start Guide) (Zhcn)	Not used	Not used	Not used	DRH1280
NSP	9	Leaflet	DRH1275	DRH1275	DRH1275	DRH1274
NSP	10	Warranty	ARY7158	Not used	Not used	Not used
	14	Packing Case	DHG3378	DHG3377	DHG3379	DHG3381
	16	Caution Card SB	Not used	Not used	ARM7064	Not used
NSP	17	CCC S Label	Not used	Not used	Not used	DRW2310
NSP	18	Name Label	Not used	Not used	Not used	DAL1271

9.2 EXTERIOR SECTION

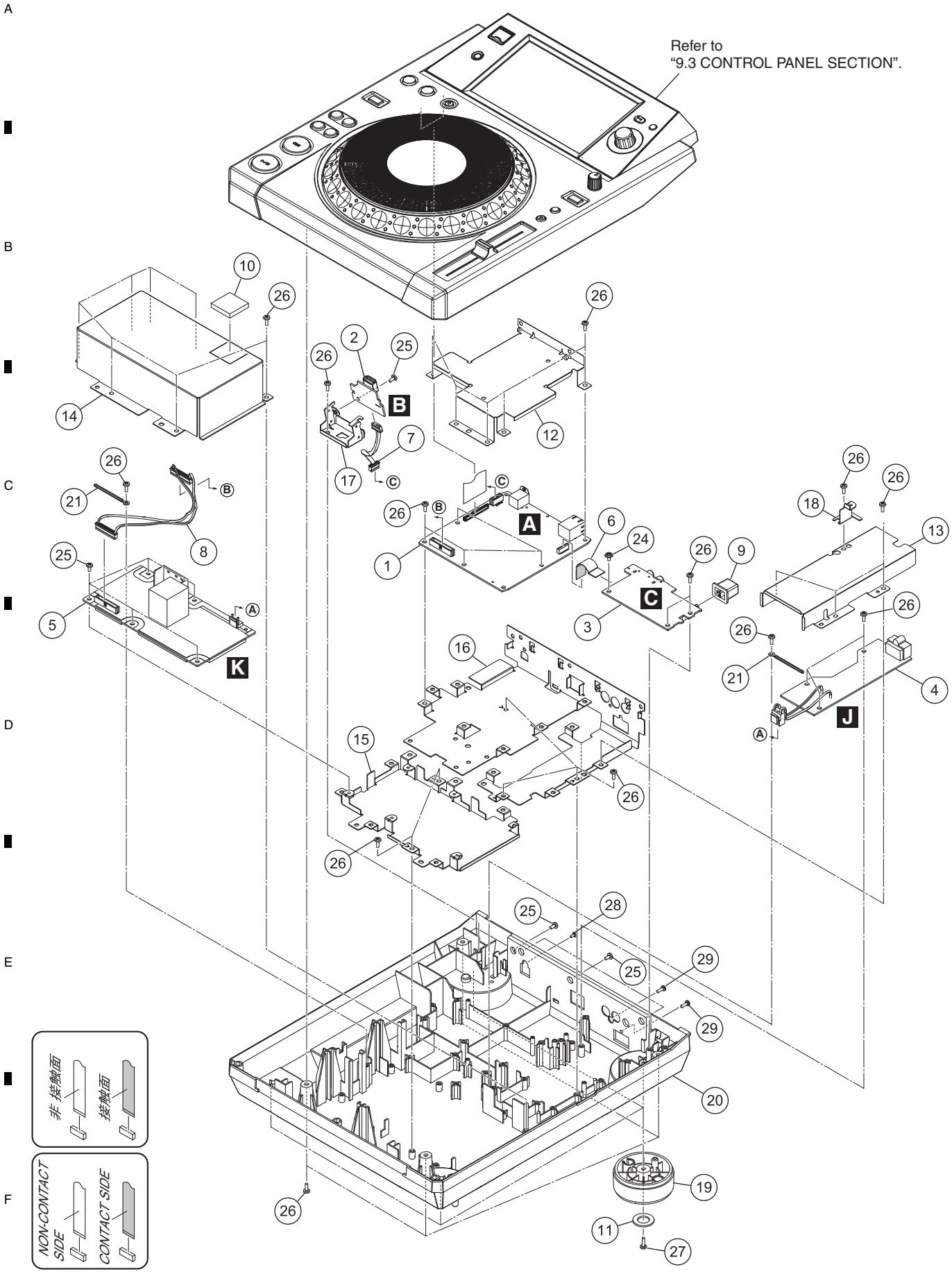

EXTERIOR SECTION PARTS LIST

Mark	No.	Description	Part No.
	1	MAIN Assy	DWX3600
	2	USBA Assy	DWX3607
	3	JKSW Assy	DWX3612
	4	ACIN Assy	DWX3609
⚠	5	SW POWER SUPPLY	DWR1545
	6	FFC	DDD1677
	7	Shielded Conn-Cable	DDA1049
	8	Crimp Connector	PF13PP-S20
	9	Power Knob	DAC2306
	10	Cushion/PNL	DEC3535
	11	Leg	DEC3564
	12	Shield Case/MIN	DNH3170
	13	Shield Case/ACI	DNH3171
	14	Shield Case/PSA	DNH3175
	15	Stay/PSA	DNH3176
	16	Stay/PCB	DNH3177
	17	Stay/USB	DNH3178
	18	Plate/JCK	DNH3193
	19	Insulator	DNK6394
⚠	20	Chassis	DNK6378
	21	Cord Clamper (Steel)	RNH-184
	22	•••••	
	23	•••••	
	24	Screw	ABZ30P060FTC
	25	Screw	BBZ30P060FTB
	26	Screw	BPZ30P080FNI
	27	Screw	BPZ30P100FTC
	28	Screw (M3*5)	DBA1340
	29	Screw	PPZ30P080FTB

9.3 CONTROL PANEL SECTION

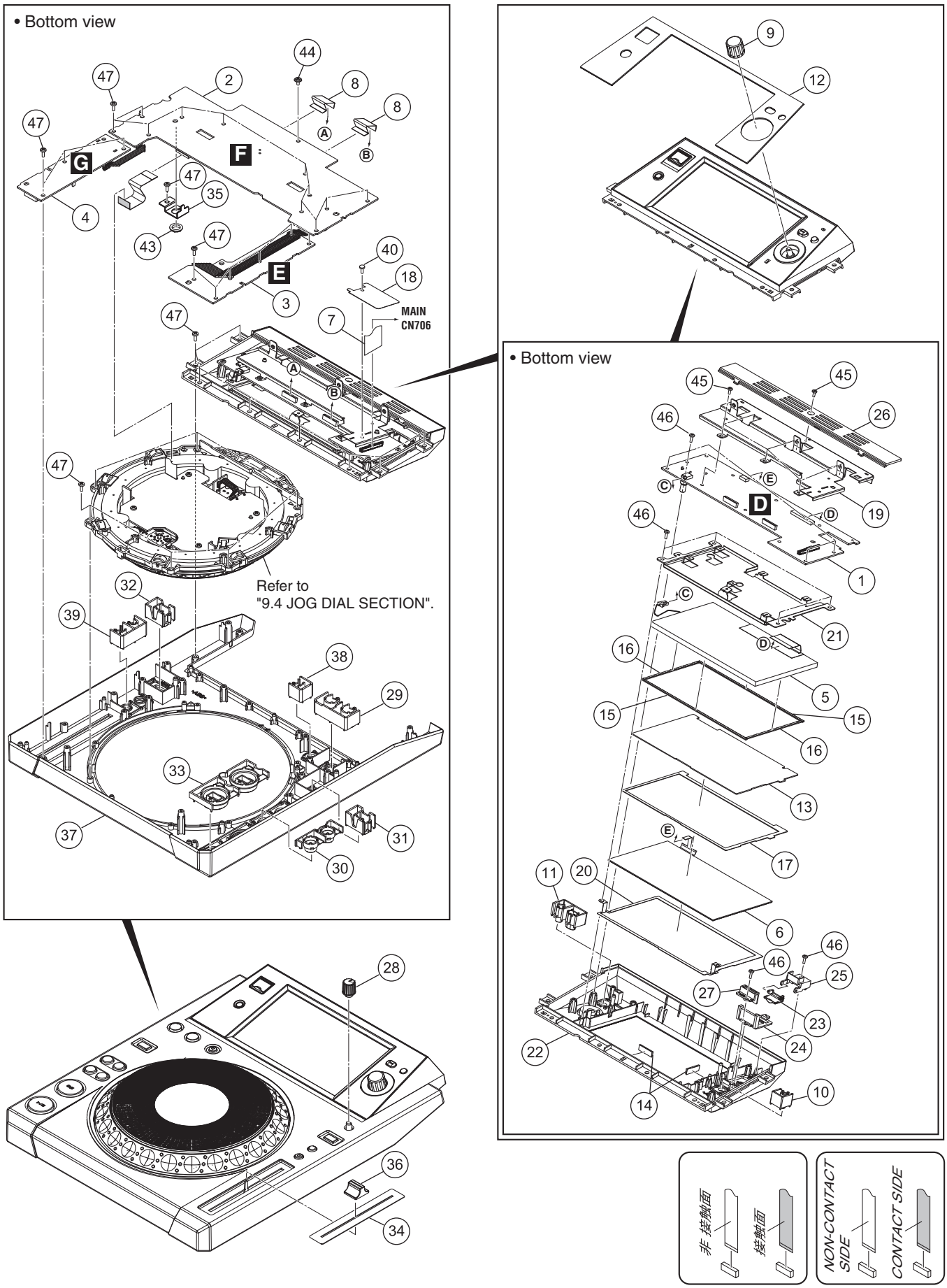

CONTROL PANEL SECTION PARTS LIST

Mark	No.	Description	Part No.
	1	LCDB Assy	DWX3601
	2	PNLB Assy	DWX3603
	3	KSWB Assy	DWX3604
	4	SLDB Assy	DWX3605
	5	TFT LCD	CWX4352
	6	Touch Panel	DSX1128
	7	FFC	DDD1675
	8	FFC	DDD1679
	9	Knob/BRS	DAA1342
	10	Button/USB	DAC3016
	11	Button/BAK	DAC3017
	12	Panel/LCD	DAH3005
	13	Panel/TCP	DAH3006
	14	Packing/LCD	DEC3565
	15	Packing/L	DEC3568
	16	Packing/S	DEC3569
	17	Spacer/LCD	DEC3571
	18	Sheet/FFC	DEC3577
	19	Shield Case/LCD	DNH3172
	20	Plate/GND	DNH3173
	21	Stay/LCD	DNH3179
⚠	22	Control Panel/LCD	DNK6377
	23	Door/USB	DNK6379
	24	Lens/USB	DNK6381
	25	Holder/DOR	DNK6383
	26	Cover/R	DNK6395
	27	Reflector	DNK6400
	28	Knob	DAA1303
	29	Button (LOOP)	DAC2470
	30	Button	DAC3079
	31	Button/REV	DAC2938
	32	Button/VNL	DAC2939
	33	Button/PLY	DAC3004
	34	Slide Sheet 1C	DAH2404
	35	Stay/VR	DNF1928
	36	Knob/SLD	DNK5981
⚠	37	Control Panel	DNK6376
	38	Button Assy/RLP	DXB2162
	39	Button Assy/TMP	DXB2163
	40	Rivet (Plastic)	RBM-003
	41	•••••	
	42	•••••	
	43	Flange Nut M9	DBN1008
	44	Screw	ABZ30P060FTC
	45	Screw	BBZ26P060FTB
	46	Screw	BPZ26P080FTC
	47	Screw	BPZ30P080FNI

9.4 JOG DIAL SECTION

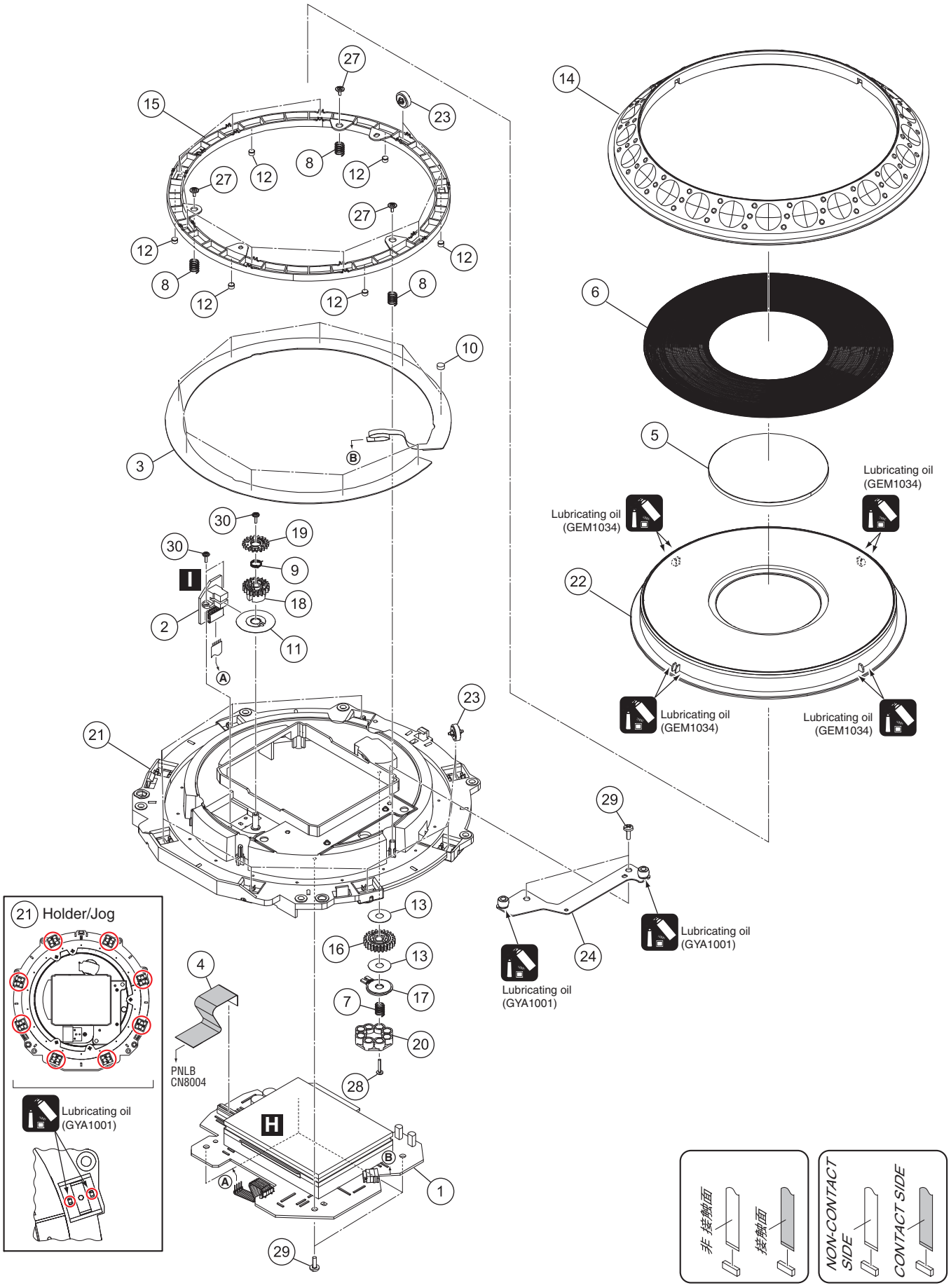

JOG DIAL SECTION PARTS LIST

Mark	No.	Description	Part No.
	1	JFLB Assy	DWX3610
	2	JOGB Assy	DWX3611
	3	Sheet SW	DSX1078
	4	FFC	DDD1681
	5	Jog Panel	DAH2609
	6	Jog Plate	DAH2839
	7	Load Spring	DBH1680
	8	SW Spring	DBH1681
	9	Encoder Spring	DBH1710
	10	SW Cushion HH48/2	DEC2538
	11	Encoder Plate	DEC2889
	12	Cushion/Rng	DEC3466
	13	Washer	DEC3137
	14	Jog B	DNK4068
	15	SW Ring	DNK5233
	16	Load Gear	DNK5236
	17	Smoother	DNK5237
	18	Gear A	DNK5241
	19	Gear B	DNK5242
	20	Adjust Plate	DNK5300
⚠	21	Holder/Jog	DNK6265
	22	Jog Dial A	DNK5357
	23	Roller Assy/A	DXB2118
	24	Stay Assy/Jog	DXB2133
	25	•••••	
	26	•••••	
	27	Screw (FE)	DBA1265
	28	Screw	BPZ20P100FTC
	29	Screw	BPZ30P080FNI
	30	Screw	IPZ20P060FTC