9. EXPLODED VIEWS AND PARTS LIST

NOTES:
- *Parts marked by "NSP" are generally unavailable because they are not in our Master Spare Parts List.*
- *The ⚠ mark found on some component parts indicates the importance of the safety factor of the part. Therefore, when replacing, be sure to use parts of identical designation.*
- *Screws adjacent to ▼ mark on product are used for disassembly.*
- *For the applying amount of lubricants or glue, follow the instructions in this manual. (In the case of no amount instructions, apply as you think it appropriate.)*

9.1 PACKING SECTION

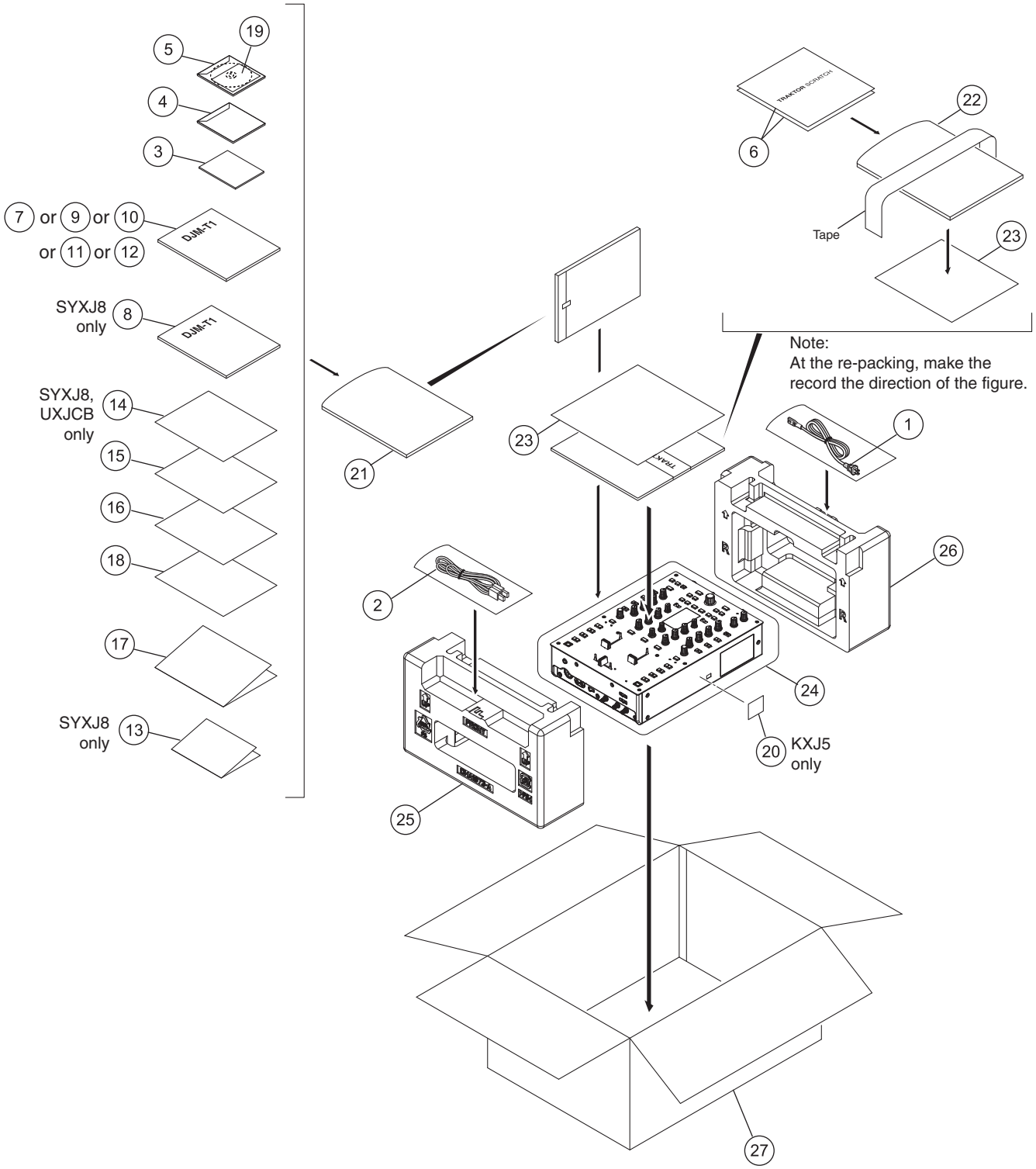

(1) PACKING SECTION PARTS LIST

Mark	No.	Description	Part No.
⚠	1	Power Cord	See Contrast table (2)
	2	USB Cable	DDE1128
NSP	3	TRAKTOR SCRATCH CONTROL CD	DXX2673
	4	Driver Software CD-ROM	DXX2675
	5	TRAKTOR SCRATCH DUO 2 Software DVD-ROM	DXX2676
NSP	6	TRAKTOR SCRATCH CONTROL VINYL	DXX2677
	7	Operating Instructions	See Contrast table (2)
	8	Operating Instructions	See Contrast table (2)
	9	Operating Instructions	See Contrast table (2)
	10	Operating Instructions	See Contrast table (2)
	11	Operating Instructions	See Contrast table (2)
	12	Operating Instructions	See Contrast table (2)
NSP	13	Warranty Card (WY)	See Contrast table (2)
	14	Leaflet/TRK	See Contrast table (2)
	15	Leaflet/A	DRM1358
	16	Leaflet/B	DRM1359
	17	Leaflet/C	DRM1360
	18	Leaflet/D	DRM1361
NSP	19	License Key Label Assy	DXA2244
NSP	20	Label/RCY	See Contrast table (2)
NSP	21	Polyethylene Bag	AHG7117
NSP	22	Polyethylene Bag	AHG7082
	23	Packing Board	DHB1002
	24	Sheet	RHX1006
	25	Pad F	DHA1873
	26	Pad R	DHA1874
	27	Packing Case	See Contrast table (2)

(2) CONTRAST TABLE

DJM-T1/SYXJ8, UXJCB, LXJ, KXJ5 and XJCN5 are constructed the same except for the following:

Mark	No.	Symbol and Description	DJM-T1/ SYXJ8	DJM-T1/ UXJCB	DJM-T1/ LXJ	DJM-T1/ KXJ5	DJM-T1/ XJCN5
⚠	1	Power Cord	ADG7062	DDG1108	ADG7062	ADG7115	ADG7105
	7	Operating Instructions (En, Fr, De)	DRB1557	Not used	Not used	Not used	Not used
	8	Operating Instructions (It, Nl, Es, Ru)	DRB1562	Not used	Not used	Not used	Not used
	9	Operating Instructions (En)	Not used	DRB1558	Not used	Not used	Not used
	10	Operating Instructions (En, Es, ZHtw)	Not used	Not used	DRB1559	Not used	Not used
	11	Operating Instructions (Ko)	Not used	Not used	Not used	DRB1560	Not used
	12	Operating Instructions (En, Zhcn)	Not used	Not used	Not used	Not used	DRB1561
NSP	13	Warranty Card (WY)	ARY7107	Not used	Not used	Not used	Not used
	14	Leaflet/TRK	DRM1357	DRM1357	Not used	Not used	Not used
NSP	20	Label/RCY	Not used	Not used	Not used	DRW2487	Not used
	27	Packing Case	DHG3019	DHG3020	DHG3022	DHG3023	DHG3024

9.2 EXTERIOR SECION

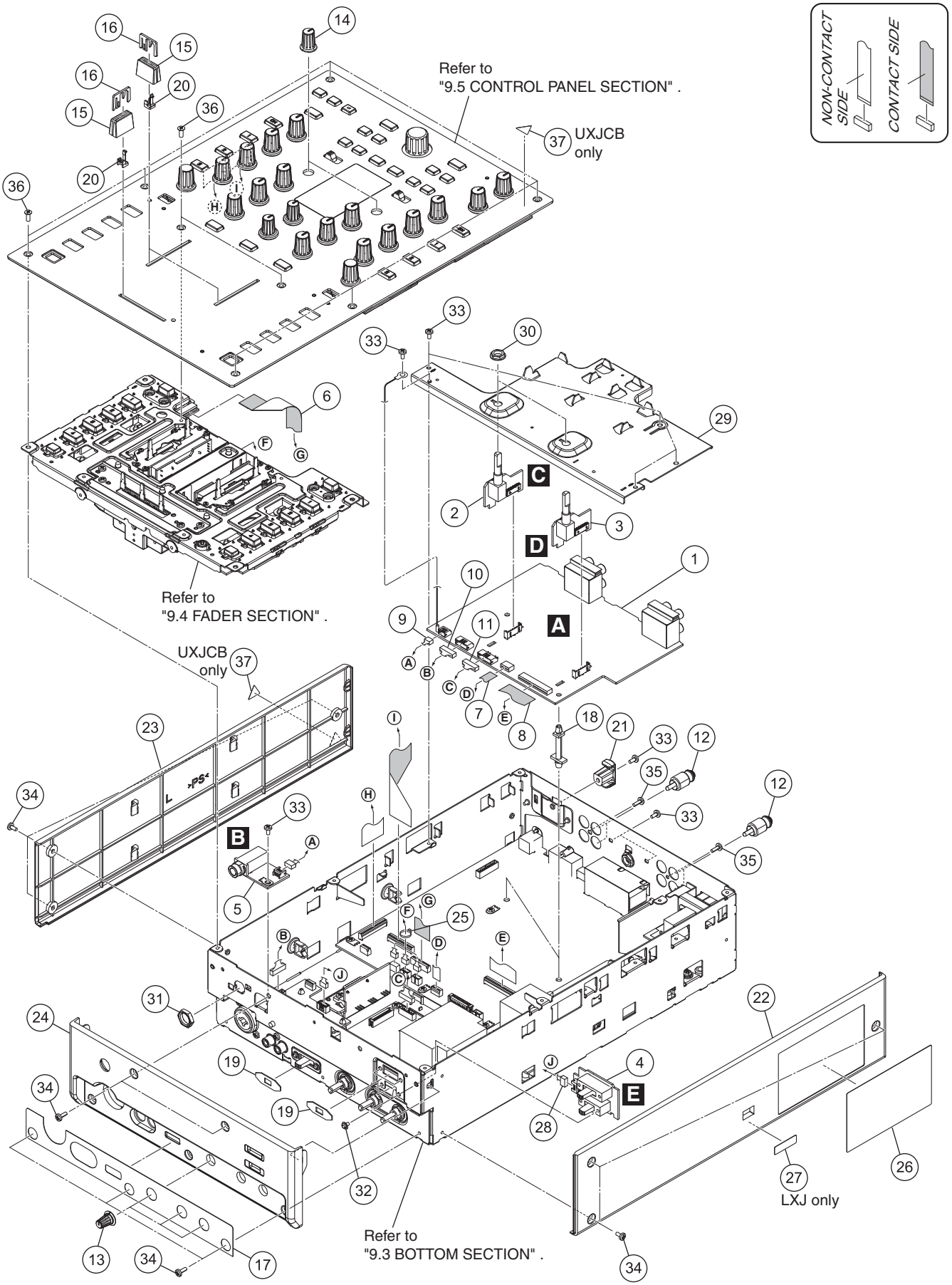

(1) EXTERIOR SECION SECTION PARTS LIST

Mark	No.	Description	Part No.
	1	INPUT Assy	DWX3282
	2	TRM1 Assy	DWX3268
	3	TRM2 Assy	DWX3269
	4	FDSW Assy	DWX3266
	5	HPJK Assy	DWX3267
	6	FFC/17P	DDD1577
	7	FFC/7P	DDD1579
	8	FFC/31P	DDD1580
	9	Crimp Connector/3P	DKP3917
	10	Connector Assy 6P	PF06PP-D22
	11	Connector Assy	PF07PP-D15
	12	Short Pin Plug	AKM7008
	13	Rotary Knob (SS)	DAA1164
	14	Rotary VR Knob	DAA1276
	15	Slider Knob 1	DAC2684
	16	Slider Knob 2	DAC2685
	17	Front Sheet	DAK1002
NSP	18	PCB Spacer	DEC1389
	19	Packing/SW	DEC3378
	20	Slider Knob Stopper	DNK5888
	21	Cord Hook	DNK5928
⚠	22	Side Panel R	See Contrast table (2)
⚠	23	Side Panel L	DNK5942
⚠	24	Front Panel	DNK5943
	25	Binder	ZCA-SKB90BK
NSP	26	Label	See Contrast table (2)
NSP	27	V Select Label	See Contrast table (2)
	28	Connector Assy	PF04PP-B20
	29	TRIM Stay	DNF1878
	30	Flange Nut M7	DBN1011
	31	Nut M12	DBN1018
	32	Screw	AMZ26P040FTC
	33	Screw	BBZ30P060FTB
	34	Screw	BBZ30P080FTB
	35	Screw	BPZ30P080FTB
	36	Screw (FE)	DBA1290
NSP	37	Label	See Contrast table (2)

(2) CONTRAST TABLE

DJM-T1/SYXJ8, UXJCB, LXJ, KXJ5 and XJCN5 are constructed the same except for the following:

Mark	No.	Symbol and Description	DJM-T1/ SYXJ8	DJM-T1/ UXJCB	DJM-T1/ LXJ	DJM-T1/ KXJ5	DJM-T1/ XJCN5
⚠	22	Side Panel R	DNK5941	DNK5941	DNK5946	DNK5941	DNK5941
NSP	26	Label	DAL1181	DAL1182	DAL1184	DAL1185	DAL1186
NSP	27	V Select Label	Not used	Not used	DRW2349	Not used	Not used
NSP	37	Label	Not used	DRW1975	Not used	Not used	Not used

9.3 BOTTOM SECTION

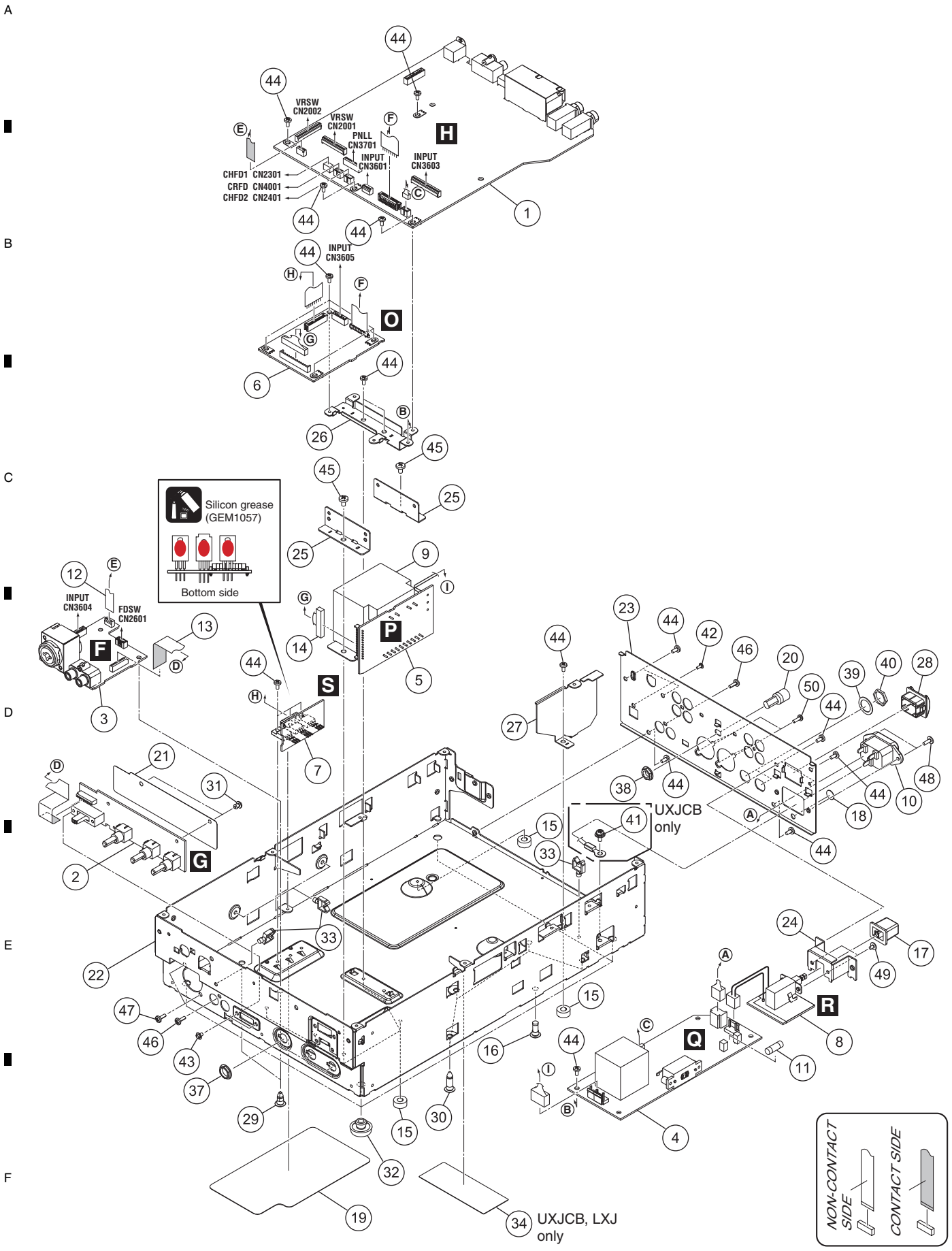

(1) BOTTOM SECTION PARTS LIST

Mark	No.	Description	Part No.
	1	OUTPUT Assy	DWX3257
	2	MCVR Assy	DWX3264
	3	MCJK Assy	DWX3265
	4	PRIMARY Assy	See Contrast table (2)
	5	TRANS Assy	See Contrast table (2)
	6	SECONDARY Assy	DWR1503
	7	REG Assy	DWR1504
	8	ACSW Assy	DWS1435
⚠	9	Power Transformer (T3101)	See Contrast table (2)
⚠	10	AC Inlet	See Contrast table (2)
⚠	11	Fuse (FU1901: T500 mA)	AEK1051
	12	FFC/6P	DDD1578
	13	FFC/17P	DDD1581
	14	Connector Assy	PF13EE-S12
NSP	15	Spacer	AEB7092
	16	PCB Holder	AEC7057
	17	Power Knob	DAC2306
	18	Blind Label	DEC2928
	19	Bottom Sheet	DEC3365
	20	Terminal Screw	DKE1014
	21	Shield Sheet C	DMR1003
	22	Chassis	DNA1430
	23	Rear Panel	See Contrast table (2)
	24	Bracket PSW	DNF1759
	25	Trans Stay	DNF1839
	26	MAIN Stay	DNF1879
	27	Shield Plate/PW	DNF1886
	28	Power Knob Guard	DNK4534
NSP	29	PCB Holder	PNW1706
	30	PCB Holder	PNW2029
	31	Rivet (Plastic)	RBM-003
	32	Foot (Rubber)	REC-434
	33	Holder	VEC1355
NSP	34	FCC Label	See Contrast table (2)
	35	•••••	
	36	•••••	
	37	Flange Nut M9	DBN1008
	38	Flange Nut M7	DBN1011
	39	Washer	DEC2920
	40	Nut (M12)	NKX2FNI
	41	Screw	See Contrast table (2)
	42	Screw (M3x5)	DBA1340
	43	Screw	AMZ26P040FTC
	44	Screw	BBZ30P060FTB
	45	Screw	BBZ40P060FTC
	46	Screw	BPZ30P080FTB
	47	Screw	BPZ30P120FTB
	48	Screw	IBZ30P080FTB
	49	Screw	IMZ30P040FTC
	50	Screw	PPZ30P080FTB

(2) CONTRAST TABLE

DJM-T1/SYXJ8, UXJCB, LXJ, KXJ5 and XJCN5 are constructed the same except for the following:

Mark	No.	Symbol and Description	DJM-T1/ SYXJ8	DJM-T1/ UXJCB	DJM-T1/ LXJ	DJM-T1/ KXJ5	DJM-T1/ XJCN5
	4	PRIMARY Assy	DWR1496	DWR1498	DWR1497	DWR1496	DWR1496
	5	TRANS Assy	DWR1500	DWR1501	DWR1505	DWR1500	DWR1500
⚠	9	Power Transformer (T3101)	DTT1225	DTT1226	DTT1225	DTT1225	DTT1225
⚠	10	AC Inlet/2P	DKP3916	Not used	DKP3916	DKP3916	DKP3916
⚠	10	AC Inlet/3P	Not used	DKP3915	Not used	Not used	Not used
	23	Rear Panel	DNC2055	DNC2056	DNC2058	DNC2059	DNC2060
NSP	34	FCC,CLASS B Label	Not used	DRW2300	Not used	Not used	Not used
NSP	34	FCC Label	Not used	Not used	DRW2299	Not used	Not used
	41	Screw	Not used	PMH40P080FTC	Not used	Not used	Not used

9.4 FADER SECTION

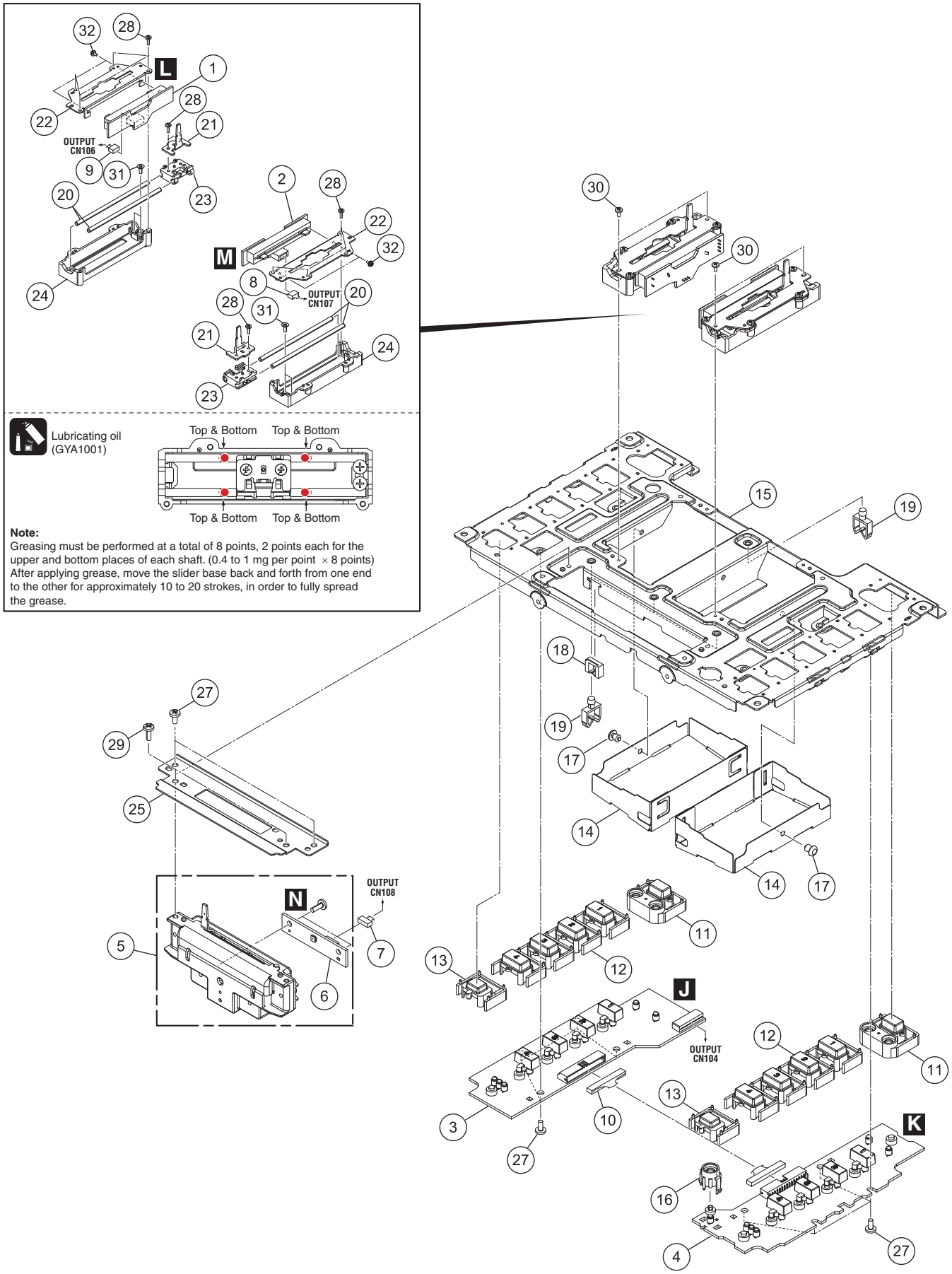

Note:
Greasing must be performed at a total of 8 points, 2 points each for the upper and bottom places of each shaft. (0.4 to 1 mg per point × 8 points) After applying grease, move the slider base back and forth from one end to the other for approximately 10 to 20 strokes, in order to fully spread the grease.

FADER SECTION PARTS LIST

Mark	No.	Description	Part No.
	1	CHFD1 Assy	DWX3260
	2	CHFD2 Assy	DWX3261
	3	PNLL Assy	DWX3262
	4	PNLR Assy	DWX3263
	5	1..CROSS FADER Assy	DXA2243
NSP	6	2..CRFD Assy	DWX3258
	7	Connector Assy	PF03PP-Q30
	8	Connector Assy	PF03PP2Q17
	9	Connector Assy	PF03PP6Q17
	10	Connector Assy	PF15PP-Q20
	11	Button MODE	DAC2759
	12	Button HOT CUE	DAC2762
	13	Button/ACT	DAC2775
	14	Shield Sheet B	DMR1002
	15	Panel Stay	DNF1880
	16	Holder/LED	DNK5973
	17	Rivet (Plastic)	RBM-003
	18	Edge Saddle	DEC1807
	19	Holder	VEC1355
NSP	20	Guide Shaft (S)	DLA1918
	21	Lever Plate	DNH2954
	22	VR Stay	DNH2955
	23	Slider Base	DNK5851
	24	Shaft Holder	DNK5852
	25	CRF Stay	DNF1874
	26	•••••	
	27	Screw	BBZ30P060FTB
	28	Screw	BPZ20P060FTC
	29	Screw	BPZ30P080FTB
	30	Screw	BSZ20P040FTB
	31	Screw	CPZ26P080FTC
	32	Screw	PMH20P040FTC

9.5 CONTROL PANEL SECTION

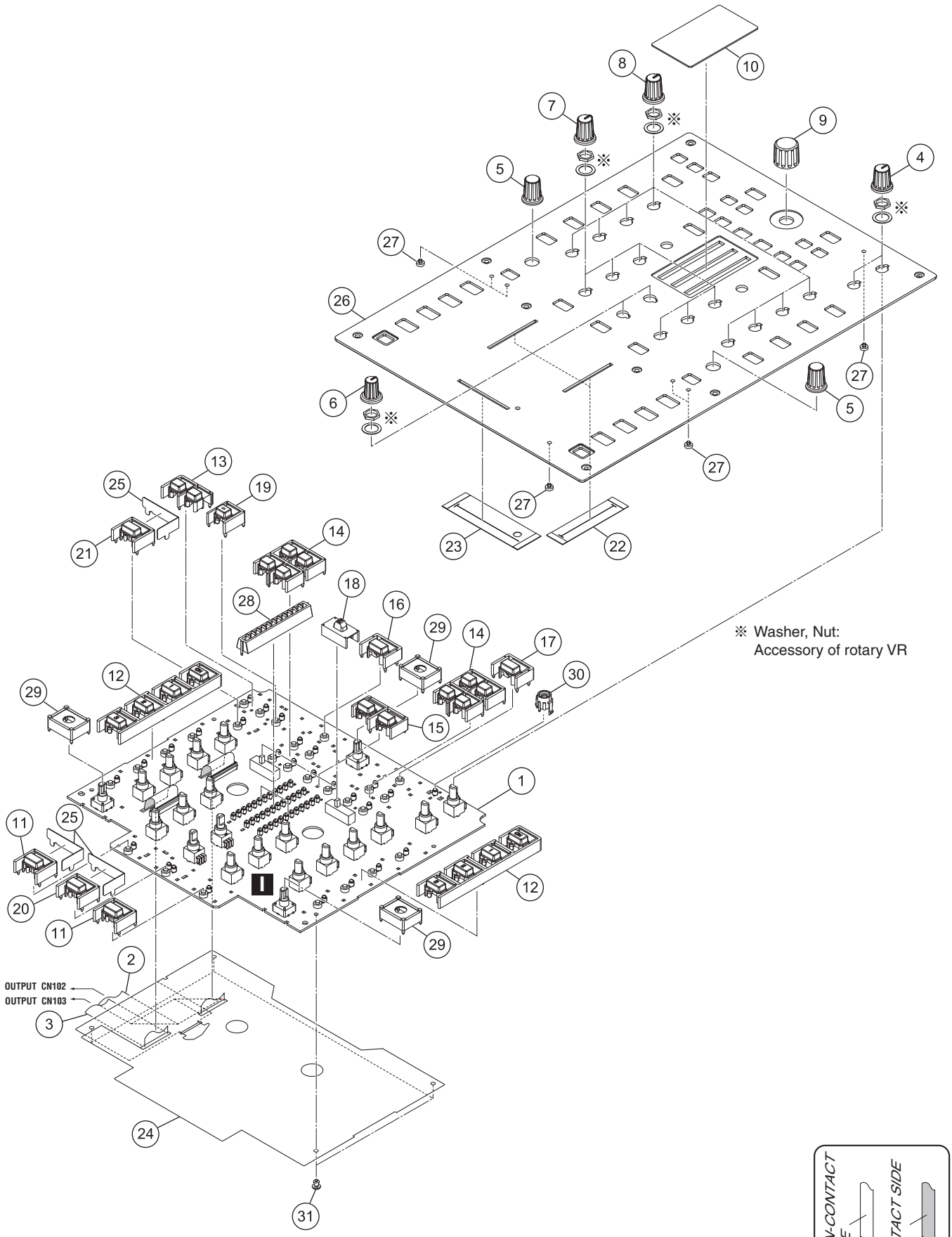

CONTROL PANEL SECTION PARTS LIST

Mark	No.	Description	Part No.
	1	VRSW Assy	DWX3259
	2	FFC/25P	DDD1575
	3	FFC/27P	DDD1576
	4	Rotary VR Knob (B)	DAA1183
	5	Dial Knob	DAA1277
	6	Rotary VR Knob	DAA1278
	7	Rotary VR Knob (B)	DAA1279
	8	Rotary VR Knob (G)	DAA1280
	9	Knob	DAA1281
	10	Level Plate	DAH2855
	11	Button CUE	DAC2758
	12	Button FX	DAC2760
	13	Button MIDI	DAC2761
	14	Button DECK	DAC2763
	15	Button SYNC	DAC2765
	16	Button LOAD A	DAC2766
	17	Button LOAD B	DAC2767
	18	Cap/MIC	DAC2773
	19	Button/UTI	DAC2776
	20	Button/SFT	DAC2778
	21	Button/SNP	DAC2779
	22	Fader Packing	DEC2903
	23	Packing/FAD	DEC3377
⚠	24	Shield Sheet A	DMR1001
	25	Shield Sheet/D	DMR1004
	26	Control Panel	DNB1191
	27	Lens	DNK4532
	28	Level Meter Holder	DNK5940
	29	Spacer	DNK5944
	30	Holder/LED	DNK5973
	31	Rivet (Plastic)	RBM-003