9. EXPLODED VIEWS AND PARTS LIST

NOTES:
- *Parts marked by "NSP" are generally unavailable because they are not in our Master Spare Parts List.*
- *The ⚠ mark found on some component parts indicates the importance of the safety factor of the part. Therefore, when replacing, be sure to use parts of identical designation.*
- *Screws adjacent to ▼ mark on product are used for disassembly.*
- *For the applying amount of lubricants or glue, follow the instructions in this manual. (In the case of no amount instructions, apply as you think it appropriate.)*

9.1 PACKING SECTION

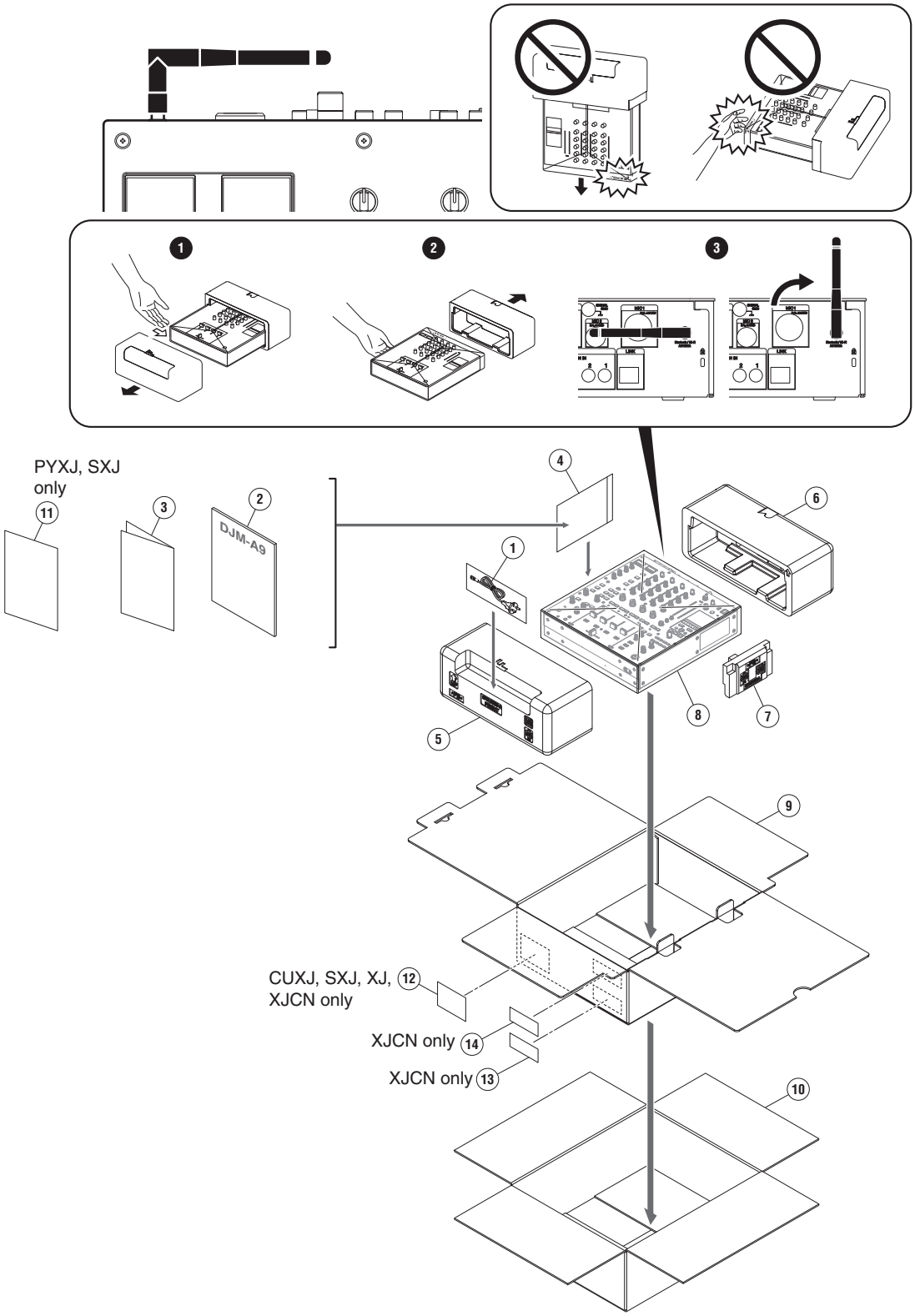

(1) PACKING SECTION PARTS LIST

Mark	No.	Description	Part No.
⚠	1	Power cord	See Contrast table (2)
	2	Quick Start Guide	See Contrast table (2)
	3	Precautions for Use	See Contrast table (2)
NSP	4	Polyethylene Bag	AHG7117
	5	Packing Pad	DHA2020
	6	Packing Pad	DHA2021
	7	Packing Pad	DHA2035
	8	Mirror Mat (1200*1000)	DHL1169
	9	Packing Case	DHG3843
	10	Master Carton	See Contrast table (2)
NSP	11	Warranty	See Contrast table (2)
NSP	12	Label	See Contrast table (2)
NSP	13	Label	See Contrast table (2)
NSP	14	Label	See Contrast table (2)

(2) CONTRAST TABLE

DJM-A9/CUXJ, PYXJ, SXJ, XJ and XJCN are constructed the same except for the following:

Mark	No.	Symbol and Description	DJM-A9/CUXJ	DJM-A9/PYXJ	DJM-A9/SXJ	DJM-A9/XJ	DJM-A9/XJCN
⚠	1	Power cord	DDG1123	DDG1124	DDG1124	DDG1124	DDG1125
	2	Quick Start Guide	DRH1701	DRH1701	DRH1701	DRH1701	DRH1702
	3	Precautions for Use	DRH1699	DRH1699	DRH1699	DRH1699	DRH1700
	10	Master Carton	DHG3847	DHG3844	DHG3845	DHG3846	DHG3849
NSP	11	Warranty	Not used	DRY1274	DRY1274	Not used	Not used
NSP	12	Label	DRW3037	Not used	DRW3035	DRW3036	DRW3039
NSP	13	Label	Not used	Not used	Not used	Not used	DRW3040
NSP	14	Label	Not used	Not used	Not used	Not used	DRW2842

9.2 EXTERIOR SECTION

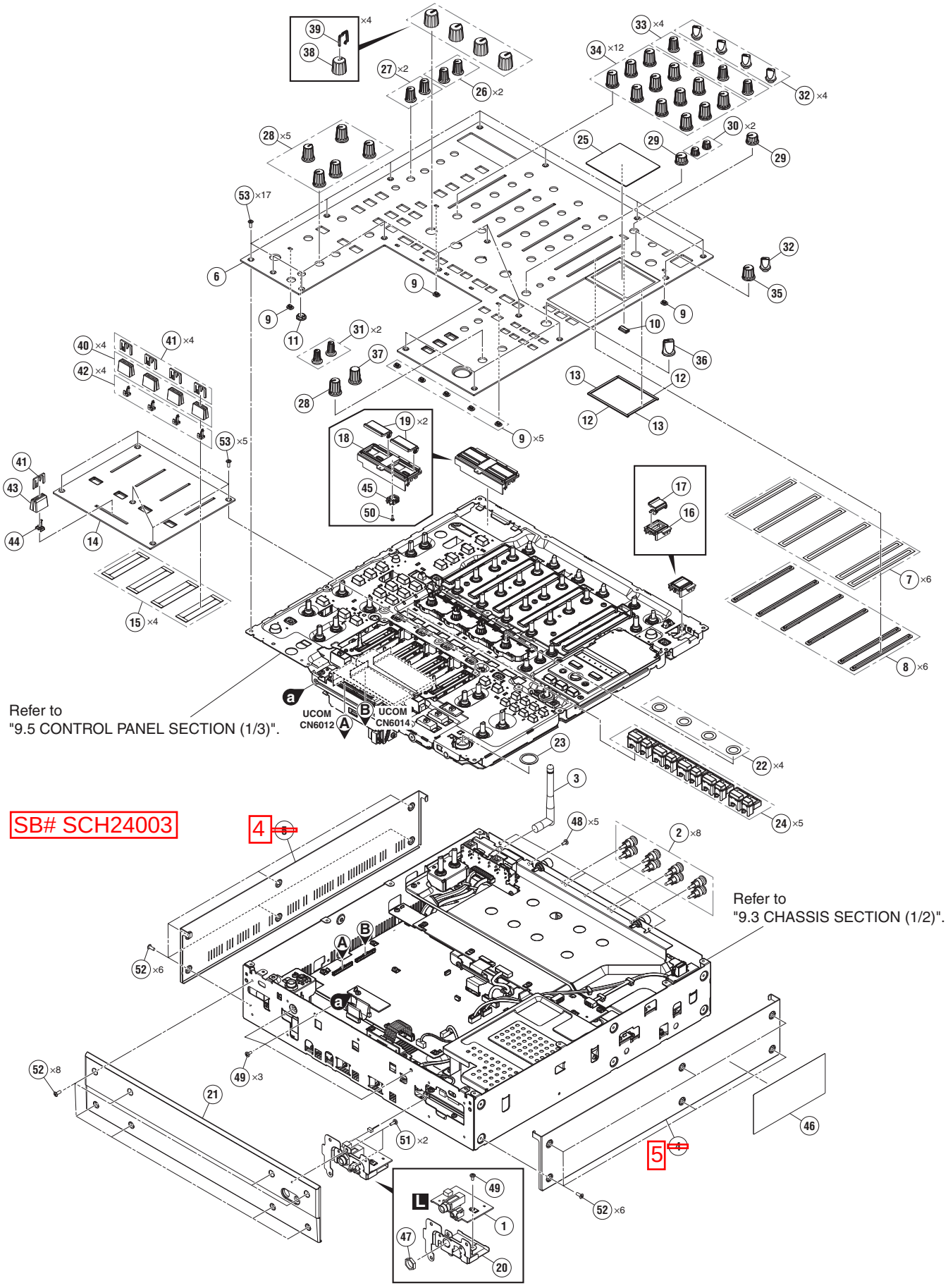

(1) EXTERIOR SECTION PARTS LIST

Mark	No.	Description	Part No.
	1	HPJC Assy	DWX4761
	2	RCA Plug	DKM1026
	3	Wi-Fi Antenna	DSD1004
	4	Panel	DAH3382
	5	Panel	DAH3383
	6	Control Panel	DNB1288
	7	DS Tape	DEH1126
	8	Lens	DNK7054
	9	Lens	DNK7053
	10	Lens	DNK6516
	11	Holder	DNK6552
	12	Cushion	DEC4042
	13	Cushion	DEC4043
	14	Panel	DAH3386
	15	Packing	DEC4028
	16	Panel	DNK7049
	17	Lid	DNK7050
	18	Panel	DNK7047
	19	Lid	DNK7048
	20	Stay	DNG1153
⚠	21	Panel	DNK7051
	22	Cushion	DEC3969
	23	SW Packing (EF)	DEC2929
	24	Button	DAC3632
	25	Window	DAH3385
	26	Knob	DAA1470
	27	Knob	DAA1471
	28	Knob	DAA1434
	29	Rotary Knob Low (BN)	DAA1265
	30	Knob	DAA1420
	31	Knob/RSW	DAA1307
	32	Knob	DAA1415
	33	Knob	DAA1417
	34	Knob	DAA1430
	35	Knob	DAA1435
	36	Select Knob	DAA1205
	37	Rotary SW Knob (C)	DAA1180
	38	Knob	DAA1445
	39	Stopper	DNK6970
	40	Knob	DAC3539
	41	Slider Knob 2	DAC2685
	42	Slider Knob Stopper	DNK5888
	43	Knob	DAC3238
	44	Stopper	DNK6440
	45	Holder	DNK6549
NSP	46	Name Label	See Contrast table (2)
	47	Nut M12	DBN1018
	48	Screw	BBZ30P060FTB
	49	Screw	BBZ30P060FTC
	50	Screw	BPZ20P060FTC
	51	Screw	BPZ30P080FNI
	52	Screw (FE)	DBA1290
	53	Screw	DBA1451

(2) CONTRAST TABLE

DJM-A9/CUXJ, PYXJ, SXJ, XJ and XJCN are constructed the same except for the following:

Mark	No.	Symbol and Description	DJM-A9/CUXJ	DJM-A9/PYXJ	DJM-A9/SXJ	DJM-A9/XJ	DJM-A9/XJCN
NSP	46	Name Label	DAL1386	DAL1383	DAL1384	DAL1385	DAL1388

9.3 CHASSIS SECTION (1/2)

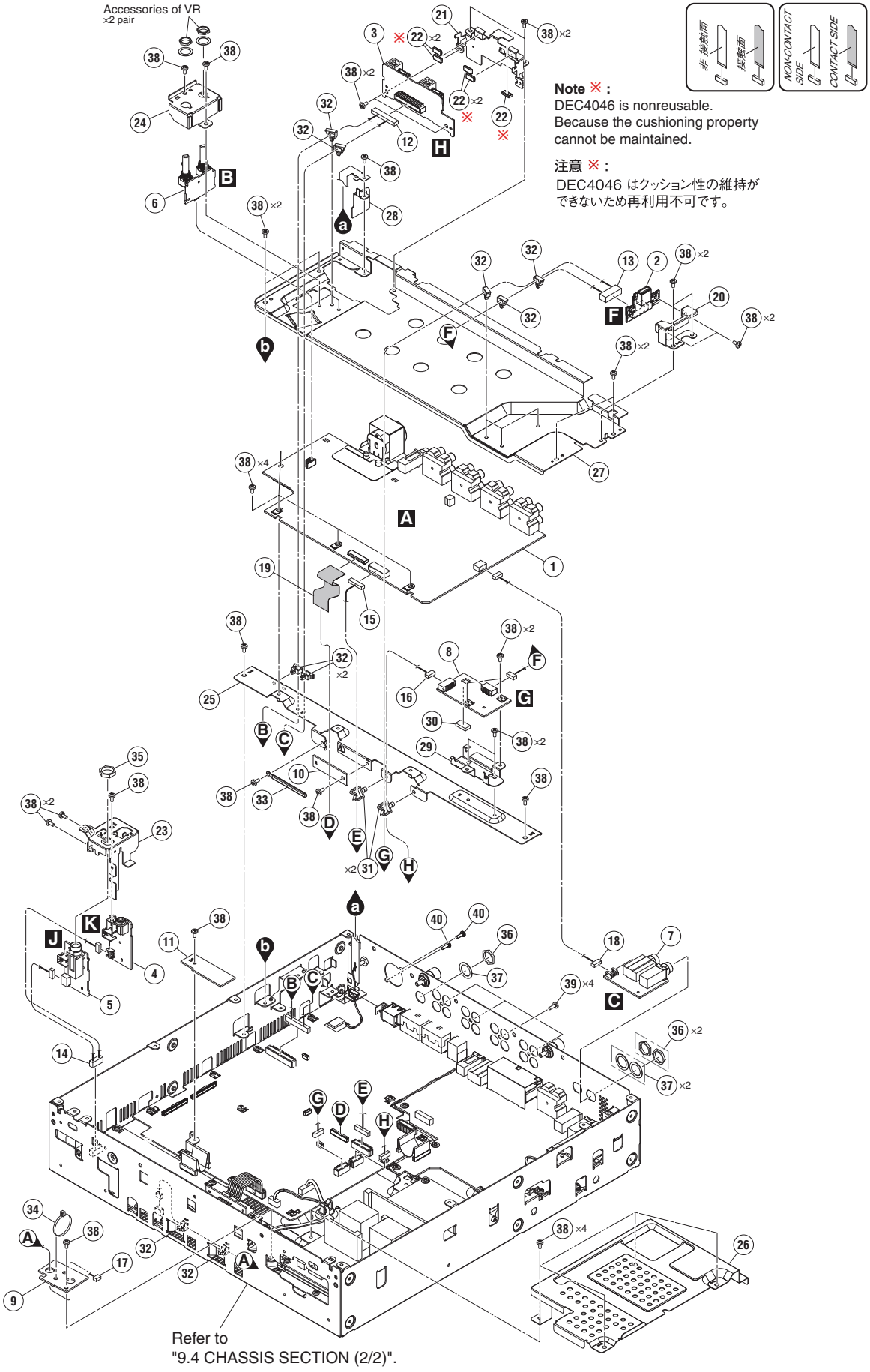

CHASSIS SECTION (1/2) PARTS LIST

Mark	No.	Description	Part No.
	1	AINB Service Assy	DEA1147
	2	USBA Assy	DWX4756
	3	USBBC Assy	DWX4757
	4	HPJK Assy	DWX4759
	5	HPJM Assy	DWX4760
	6	MTRM Assy	DWX4762
	7	RTNJ Assy	DWX4766
	8	USBP Assy	DWX4767
	9	CCB1 Assy	DWX4803
	10	FGP1 Assy	DWX4801
	11	FGP2 Assy	DWX4802
	12	Shielded Conn-Cable	DDA1107
	13	Shielded Conn-Cable	DDA1105
	14	Crimp Connector	DDC1043
	15	Parallel Jumper	PF10PP-S07A
	16	Connector Assy	PF06PP-S12
	17	Parallel Jumper	PF03PP-D25A
	18	Parallel Jumper	PF04PP-D07A
	19	FFC	DDD2147
	20	Stay	DNG1148
	21	Stay	DNG1154
	22	Gasket	DEC4046
	23	Stay	DNG1151
	24	Stay	DNG1157
	25	Stay	DNG1150
	26	Cover	DNF2066
	27	Shield Plate	DNG1149
	28	Shield Plate	DNG1156
	29	Stay	DNF1951
	30	Sheet	DEC3621
	31	Holder	VEC1355
	32	Locking Mini Clamp	DEC2439
	33	Cord Clamper	DEX1025
	34	Cable Tie (SKB-90BK)	ZCA-SKB90BK
	35	Nut M12	DBN1018
	36	Nut M12	NKX2FNI
	37	Washer	DEC2920
	38	Screw	BBZ30P060FTC
	39	Screw	BPZ30P080FTB
	40	Screw	PPZ30P080FTB

9.4 CHASSIS SECTION (2/2)

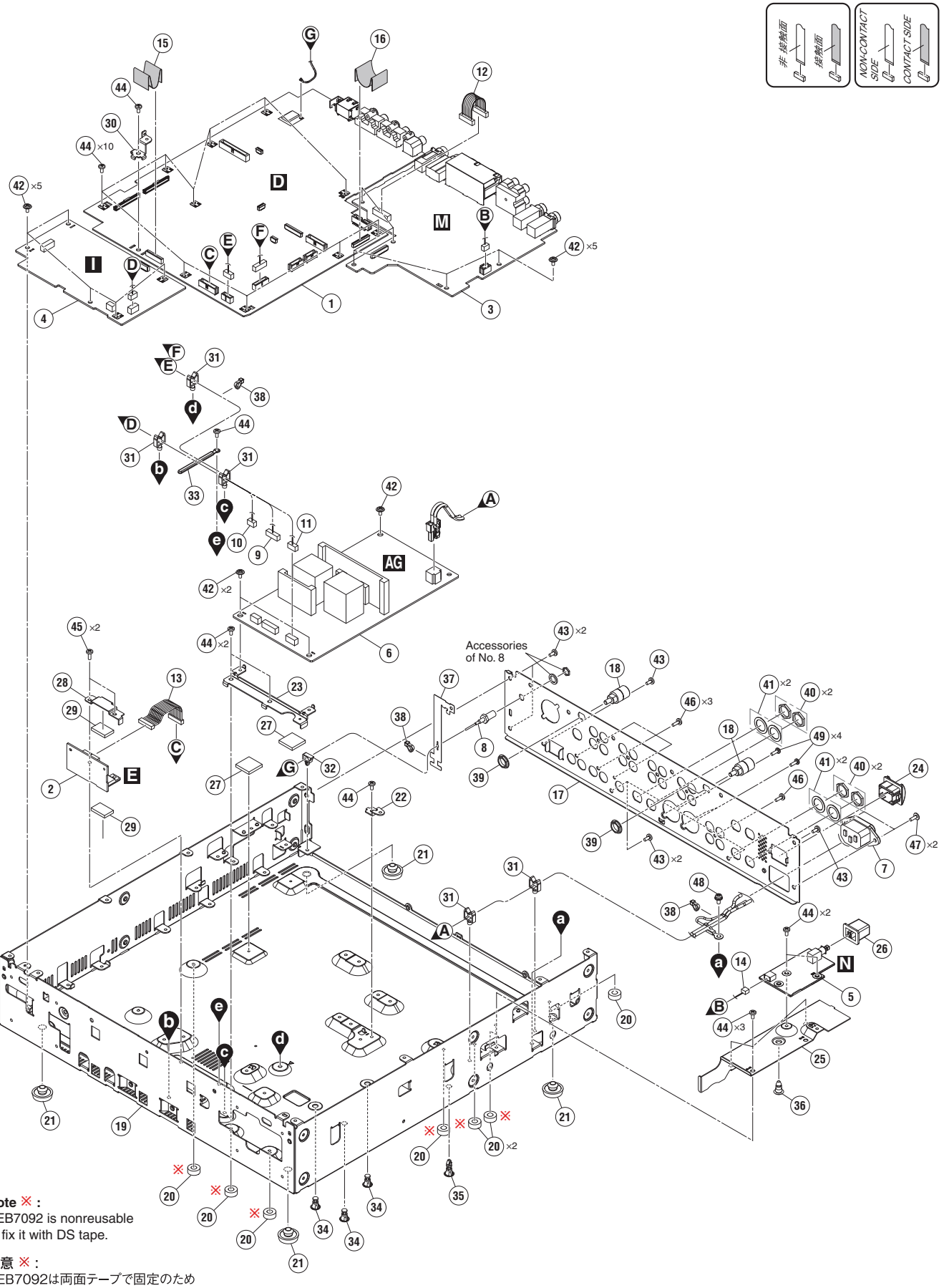

Note ※ :
AEB7092 is nonreusable to fix it with DS tape.

注意 ※ :
AEB7092は両面テープで固定のため再利用不可です。

CHASSIS SECTION (2/2) PARTS LIST

Mark	No.	Description	Part No.
	1	MAIN Assy	DWX4755
	2	REGB Assy	DWX4763
	3	AOUT Assy	DWX4764
	4	HPPW Assy	DWX4765
	5	PSWB Assy	DWX4780
⚠	6	SW POWER SUPPLY	DWR1581
⚠	7	AC Inlet	DKP3998
	8	Shielded Conn-Cable	DDA1110
	9	Parallel Jumper	PF08PP-S22A
	10	Parallel Jumper	PF04PP-S17A
	11	Parallel Jumper	PF05PP-S27A
	12	Parallel Jumper	PF09PP-D05A
	13	Crimp Connector	PF09PP-S07
	14	Connector Assy	PF03PP-B05
	15	FFC	DDD2146
	16	FFC	DDD2147
	17	Rear Panel	DNC2142
	18	Earth Terminal	DKE1019
	19	Chassis	DNA1485
NSP	20	Spacer	AEB7092
	21	Foot (Rubber)	REC-434
NSP	22	PCB Stay (FE)	VNE2489
	23	Stay	DNG1129
	24	Power Knob Guard	DNK4534
	25	Shield Case	DNG1152
	26	Power Knob	DAC2306
	27	Sheet	DEC3618
	28	Cover	DNG1138
	29	Sheet	DEC3901
	30	Stay	DND1313
	31	Holder	VEC1355
	32	Locking Mini Clamp	DEC2439
	33	Cord Clamper	DEX1025
⚠	34	Spacer	DEC3878
⚠	35	Spacer	DEC3850
NSP	36	PCB Holder	PNW1706
	37	Sheet	DEC4079
	38	Cable Tie (SKB-90BK)	ZCA-SKB90BK
	39	Flange Nut M9	DBN1008
	40	Nut M12	NKX2FNI
	41	Washer	DEC2920
	42	Screw	ABZ30P060FTC
	43	Screw	BBZ30P060FTB
	44	Screw	BBZ30P060FTC
	45	Screw	BBZ30P080FTC
	46	Screw	BPZ30P080FTB
	47	Screw	IBZ30P080FTB
	48	Screw	PMH40P080FTC
	49	Screw	PPZ30P080FTB

9.5 CONTROL PANEL SECTION (1/3)

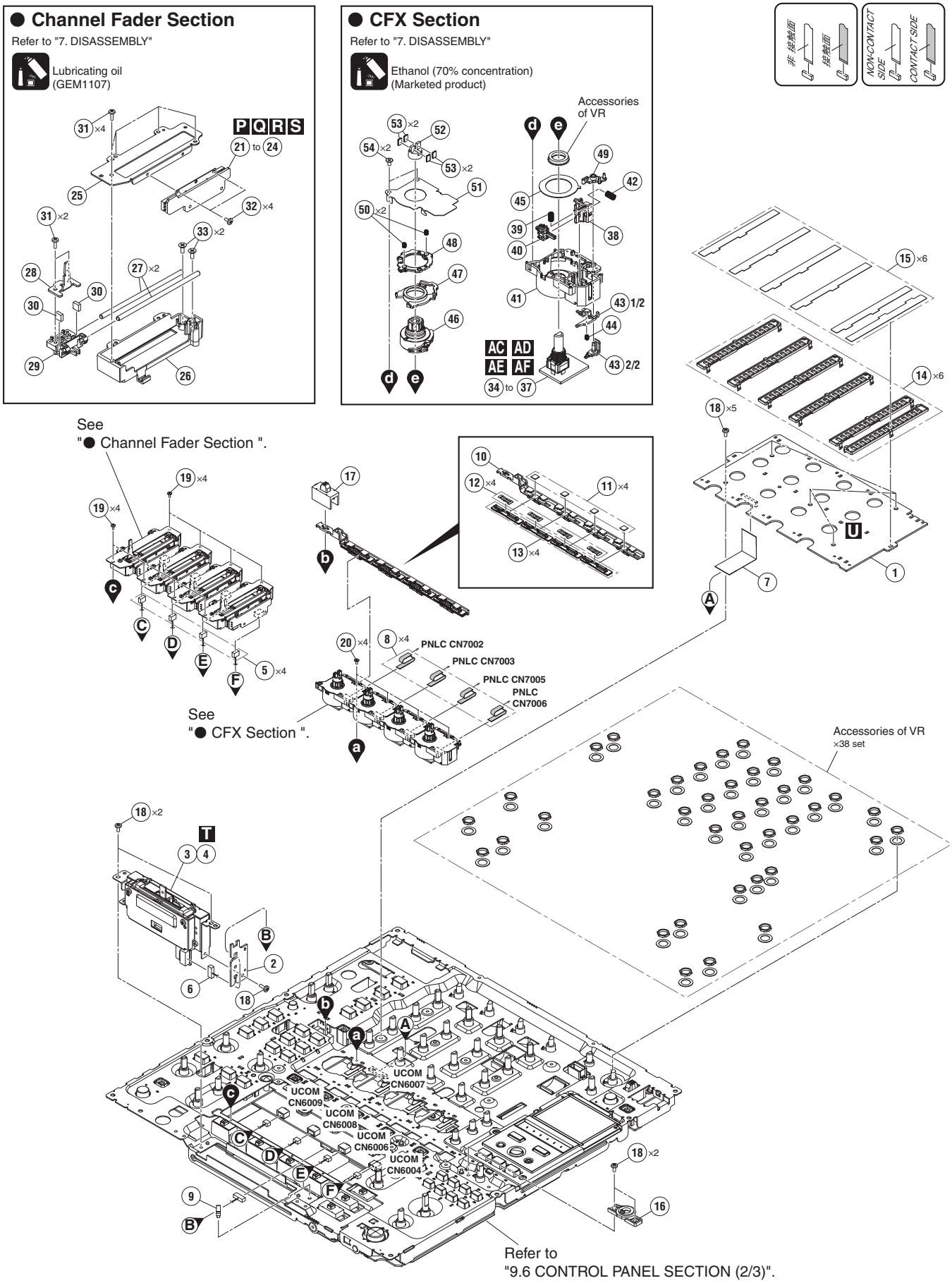

CONTROL PANEL SECTION (1/3) PARTS LIST

Mark	No.	Description	Part No.
	1	LEDB Assy	DWX4769
	2	CRF Assy	DWX4790
	3	1..Crossfader Service Assy	DEA1096
NSP	4	2..CRFB Assy	DWX4772
	5	Crimp Connector	DDC1041
	6	Crimp Connector	DDC1042
	7	FFC	DDD2089
	8	FFC	DDD2096
	9	Locking Mini Clamp	DEC2439
	10	Lever	DNK6906
	11	Grip	DED1192
	12	Leaf Spring	DBK1402
	13	Adjuster	DNK6974
	14	Holder	DNK6878
	15	Sheet	DEC3885
	16	Stopper	DNK7069
	17	Cap	DAC3520
	18	Screw	BBZ30P060FTC
	19	Screw	BSZ20P040FTB
	20	Screw	DBA1456

Channel Fader Section

	21	CHF1 Assy	DWX4783
	22	CHF2 Assy	DWX4784
	23	CHF3 Assy	DWX4785
	24	CHF4 Assy	DWX4786
	25	Cover	DNG1131
	26	Holder	DNK6884
	27	Guide Shaft VK1	DLA1978
	28	Lever Plate	DNH2954
	29	Slider	DNK6889
	30	Cushion	DEC3640
	31	Screw	BPZ20P060FTC
	32	Screw	BSZ20P040FTB
	33	Screw	CPZ26P080FTC

CFX Section

	34	CFX1 Assy	DWX4773
	35	CFX2 Assy	DWX4774
	36	CFX3 Assy	DWX4775
	37	CFX4 Assy	DWX4776
	38	Holder	DNK6903
	39	Spring	DBH1826
	40	Stopper	DNK6902
	41	Base	DNK6900
	42	Spring	DBH1827
	43	Brake	DNK7061
	44	Spring	DBH1843
	45	Sheet	DEC3971
	46	Cam	DNK6901
	47	Cam	DNK6969
	48	Plate	DNK6929
	49	Arm	DNK6905
	50	Coil Spring	DBH1851
	51	Cover	DNH3454
	52	Cap	DNK6904
	53	Contact Rubber	DEC3972
	54	Screw	DBA1455

9.6 CONTROL PANEL SECTION (2/3)

• Bottom view

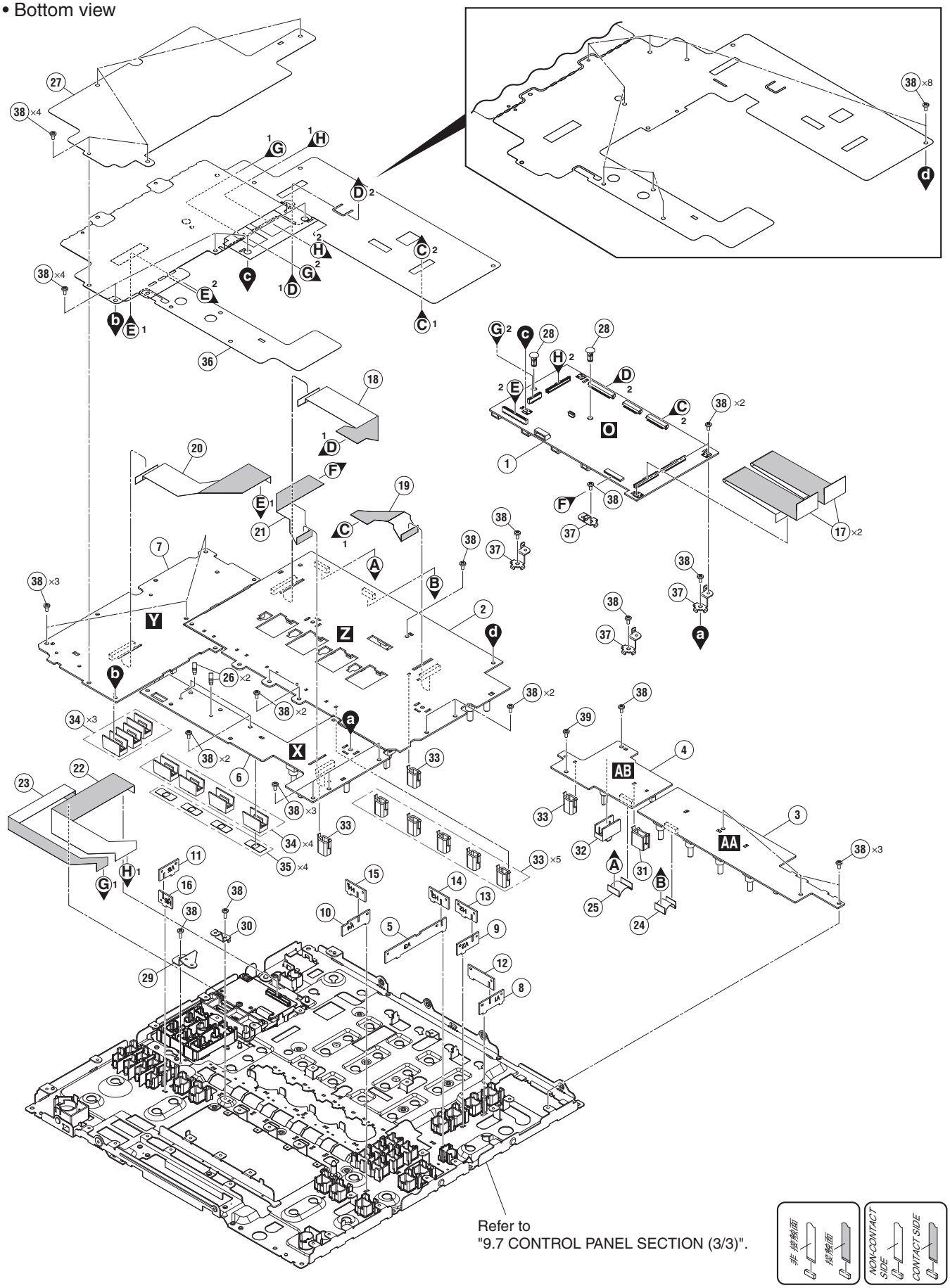

CONTROL PANEL SECTION (2/3) PARTS LIST

Mark	No.	Description	Part No.
	1	UCOM Assy	DWX4768
	2	PNLC Assy	DWX4777
	3	PNLU Assy	DWX4778
	4	MIOB Assy	DWX4779
	5	SHADE V3 Assy	DWX4793
	6	PNLL Assy	DWX4781
	7	PNLR Assy	DWX4782
	8	SHADE V1 Assy	DWX4791
	9	SHADE V2 Assy	DWX4792
	10	SHADE V4 Assy	DWX4794
	11	SHADE V5 Assy	DWX4795
	12	SHADE H1 Assy	DWX4796
	13	SHADE H2 Assy	DWX4797
	14	SHADE H3 Assy	DWX4798
	15	SHADE H4 Assy	DWX4799
	16	SHADE H5 Assy	DWX4800
	17	FFC	DDD2152
	18	FFC	DDD2087
	19	FFC	DDD2088
	20	FFC	DDD2090
	21	FFC	DDD2091
	22	FFC	DDD2092
	23	FFC	DDD2093
	24	FFC	DDD2094
	25	FFC	DDD2095
	26	Locking Mini Clamp	DEC2439
⚠	27	Sheet	DEC4058
	28	Spacer	DEC3880
	29	Stay	DND1321
	30	Stay	DND1322
	31	Holder	DNK6511
	32	Cap	DAC3136
	33	Holder	DNK7066
	34	Slide SW Cap (W)	DAC2401
	35	Sheet	DEC3902
	36	Sheet	DEC4050
	37	Stay	DND1313
	38	Screw	BBZ30P060FTC
	39	Screw	BPZ30P080FTB

9.7 CONTROL PANEL SECTION (3/3)

• Bottom view

● LCD Section

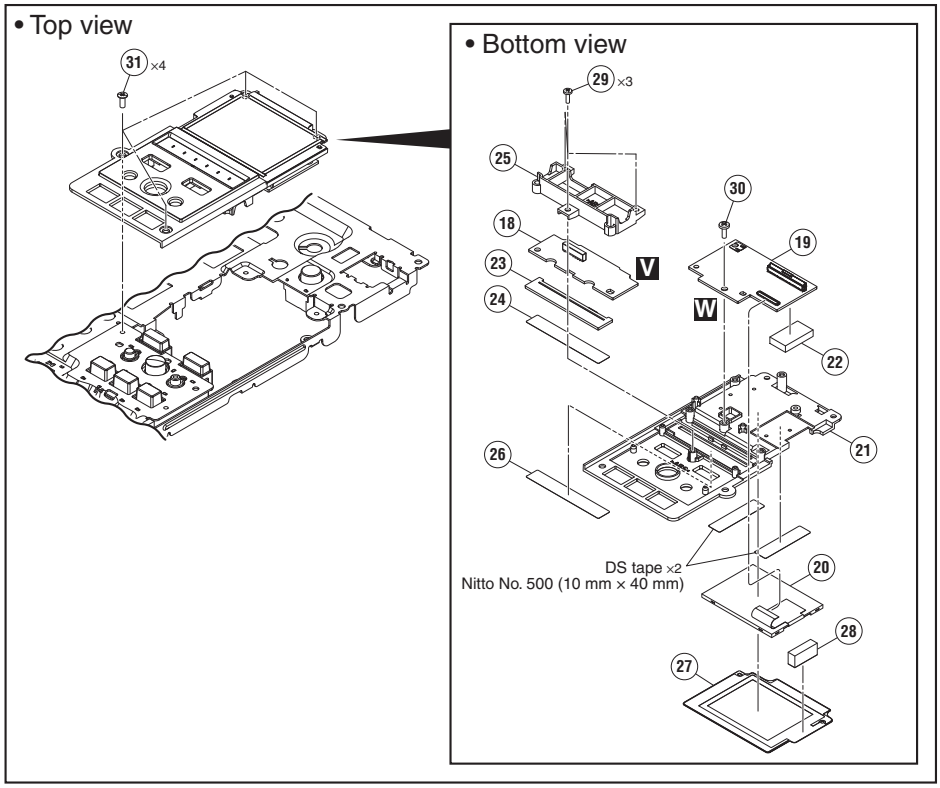

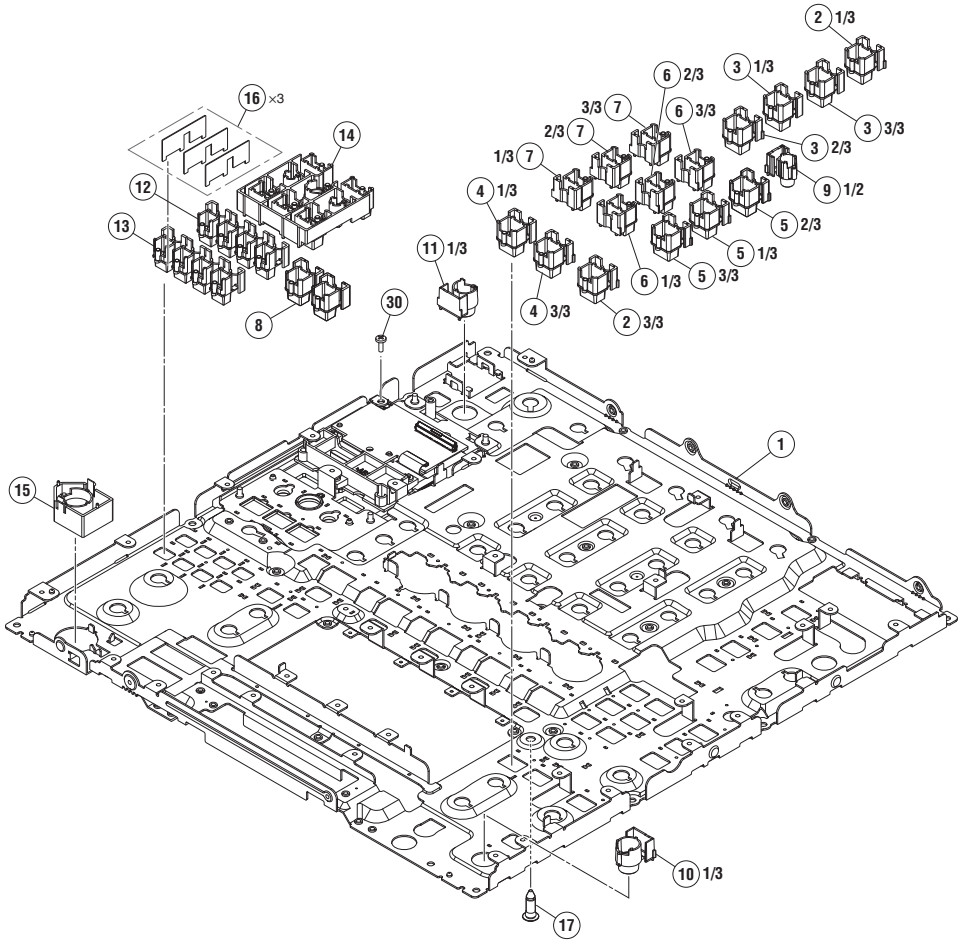

● Divide position

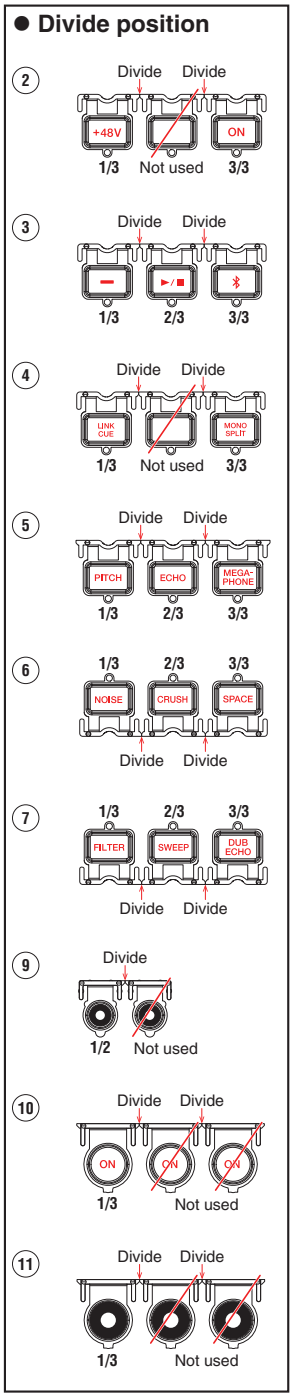

CONTROL PANEL SECTION (3/3) PARTS LIST

Mark	No.	Description	Part No.
	1	Stay	DND1320
	2	Button	DAC3637
	3	Button	DAC3635
	4	Button	DAC3636
	5	Button	DAC3639
	6	Button	DAC3640
	7	Button	DAC3641
	8	Button	DAC3631
	9	Button	DAC3491
	10	Button	DAC3628
	11	Button	DAC3630
	12	Button	DAC3633
	13	Button	DAC3634
	14	Button	DAC3142
	15	Button	DAC3141
	16	Sheet	DEC4041
	17	PCB Holder	PNW2029
LCD Section			
	18	CDCB Assy	DWX4771
	19	LCDB Assy	DWX4770
	20	TFT LCD	DWX4330
	21	Panel	DNK7067
	22	Cushion	DEC4030
	23	Lens	DNK7052
	24	DS Tape	DEH1125
	25	Holder	DNK7068
	26	Panel	DNK7136
	27	Sheet	DEC4032
	28	Cushion	DEC4031
	29	Screw	BPZ26P080FTC
	30	Screw	BPZ30P080FTB
	31	Screw (FE)	DBA1290

12. PCB PARTS LIST

NOTES: ● *Parts marked by "NSP" are generally unavailable because they are not in our Master Spare Parts List.*

● *The ⚠ mark found on some component parts indicates the importance of the safety factor of the part. Therefore, when replacing, be sure to use parts of identical designation.*

● *When ordering resistors, first convert resistance values into code form as shown in the following examples.*

Ex.1 When there are 2 effective digits (any digit apart from 0), such as 560 ohm and 47 k ohm (tolerance is shown by J = 5%, and K = 10%).

560 Ω	→	*56 × 10^1*	→	*561* ····· *RD1/4PU 5 6 1 J*
47 kΩ	→	*47 × 10^3*	→	*473* ····· *RD1/4PU 4 7 3 J*
0.5 Ω	→	*R50*		····· *RN2H R 5 0 K*
1 Ω	→	*1R0*		····· *RS1P 1 R 0 K*

Ex.2 When there are 3 effective digits (such as in high precision metal film resistors).

5.62 kΩ	→	*562 × 10^1*	→	*5621* ····· *RN1/4PC 5 6 2 1 F*

LIST OF ASSEMBLIES

Mark	No.	Description	Part No.
NSP	1	MOTHER ASSY	DWM2844
	2	MAIN ASSY	DWX4755
	2	USBA ASSY	DWX4756
	2	USBBC ASSY	DWX4757
	1	CDCB ASSY	DWX4771
NSP	1	AINB ASSY	DWM2845
	2	AINB SERVICE ASSY	DEA1147
	2	HPJK ASSY	DWX4759
	2	HPJM ASSY	DWX4760
	2	HPJC ASSY	DWX4761
	2	MTRM ASSY	DWX4762
	2	REGB ASSY	DWX4763
NSP	1	AOUTB ASSY	DWM2846
	2	AOUT ASSY	DWX4764
	2	HPPW ASSY	DWX4765
	2	RTNJ ASSY	DWX4766
NSP	1	SUB ASSY	DWM2847
	2	UCOM ASSY	DWX4768
	2	LEDB ASSY	DWX4769
	2	LCDB ASSY	DWX4770
	2	USBP ASSY	DWX4767
NSP	2	CRFB ASSY	DWX4772
	2	CFX1 ASSY	DWX4773
	2	CFX2 ASSY	DWX4774
	2	CFX3 ASSY	DWX4775
	2	CFX4 ASSY	DWX4776
	1	PNLC ASSY	DWX4777
NSP	1	PNL2 ASSY	DWM2848
	2	PNLU ASSY	DWX4778
	2	MIOB ASSY	DWX4779
	2	PSWB ASSY	DWX4780
NSP	1	PNL3 ASSY	DWM2849
	2	PNLL ASSY	DWX4781
	2	PNLR ASSY	DWX4782
	2	CHF1 ASSY	DWX4783
	2	CHF2 ASSY	DWX4784
	2	CHF3 ASSY	DWX4785
	2	CHF4 ASSY	DWX4786
⚠	1	SW POWER SUPPLY	DWR1581

AINB ASSY
Consists of
AINB SERVICE ASSY
HPJK ASSY
HPJM ASSY
HPJC ASSY
MTRM ASSY
REGB ASSY

A B E J K L

AINB ASSY

SEMICONDUCTORS

Mark	No.	Description	Part No.
	IC	4001	TC7SZ08FUS2
	IC	4002-4004	TC7SH08FUS2
⚠	IC	4005	LP5907MFX-4.5@V
⚠	IC	4006	S-1170B33UC-OTS
	IC	4101-4103,4201-4203	LME49723MA
	IC	4104,4105,4204,4205	NE5532AD
	IC	4301-4303,4401-4403	LME49723MA
	IC	4304,4305,4404,4405	NE5532AD
NSP	IC	4501,4502	ES9842QPRO@V
	IC	4601	NJM2068MD
	IC	4602,4703	PCM1803ADB
	IC	4701,4702	NJM4580MD
⚠	IC	5051	LM7915CT@V
⚠	IC	5052	NJM7805FA
⚠	IC	5053	NJM7815FA
	Q	4101,4102,4201,4202	HN1C01FUS1
	Q	4103,4104,4203,4204	2SK3320
	Q	4105,4205,4305,4405	LSCR523UB
	Q	4301,4302,4401,4402	HN1C01FUS1
	Q	4303,4304,4403,4404	2SK3320
	Q	4701-4704	2SK209
	D	4101-4104,4201-4204	DF2B18FU
	D	4105,4205,4305,4405	1SS355L@V
	D	4106-4109,4206-4209	RB548W
	D	4301-4304,4401-4404	DF2B18FU
	D	4306-4309,4406-4409	RB548W
	D	4601,4602	RB548W
	D	4701-4704,5053-5056	RB501VM-40
	D	4851-4853,4901-4903	DF2B18FU
	D	4951-4953	DF2B18FU

MISCELLANEOUS

	L	4701,4702 CHIP SOLID INDUCTOR	XTL3010
	JA	4101,4201,4301,4401 4P PIN JACK	DKB1090
	JA	4701 XLR SOCKET	DKB1124

Mark	No.	Description	Part No.
	JA 4702,4851,4951	6.5 DIA JACK	DKN1669
	JA 4901,4952	STEREO MINI JACK	XKN3017
	KN 4001-4003,4951	EARTH TERMINAL	AKF7002
	KN 4851,4901,4902	SCREW PLATE	VNE1948
	RY 4101,4201,4301,4401	RELAY	DSR1023
	CN 4001	FFC CONNECTOR	VKN1811
	CN 4002	CONNECTOR	HWW-R1020-J1@V
	CN 4003,4851	CONNECTOR	HWW-R0420-J1@V
	CN 4701	B TO B CONNECTOR	DKP3997
	CN 4901,4951	CONNECTOR	HWW-R0320-J1@V
	CN 5001	PLUG	CKS3533
	CN 5051	CONNECTOR	HWW-L0920-J1@V
	VA 4101,4102,4201,4202	VARISTORS	EZJZ1V270RM
	VA 4301,4302,4401,4402	VARISTORS	EZJZ1V270RM
	VA 4701,4704-4708	VARISTORS	EZJZ1V270RM

RESISTORS

	R	4001,4002	RT0603DRD0768RL@V
	R	4003,4004	RT0603DRD0722RL@V
	R	4006,4007,4502,4503	RC0402JR-070RL@V
	R	4008-4015,4116,4118	RC0402JR-0747RL@V
	R	4016,4156,4157,4256	RT0603DRD071KL@V
	R	4101,4102,4201,4202	RT0603DRD07100RL@V
	R	4103,4104,4203,4204	RC0603JR-07100RL@V
	R	4105,4205,4305,4405	RC0402JR-0718KL@V
	R	4106,4206,4306,4406	RC0603JR-072KL@V
	R	4107,4108,4207,4208	RC0603JR-071K2L@V
	R	4109,4209,4309,4409	RC0402JR-07470RL@V
	R	4110,4113,4210,4213	RT0603DRD07470RL@V
	R	4111,4112,4211,4212	RT0603DRD0747KL@V
	R	4114,4115,4214,4215	RT0603DRD071K2L@V
	R	4117,4119,4217,4219	RT0603DRD07220RL@V
	R	4120,4121,4124,4125	RT0603DRD072K2L@V
	R	4122,4123,4222,4223	RC0603DR-0747KL@V
	R	4126,4127,4226,4227	RT0603DRD0791KL@V
	R	4128,4129,4228,4229	RT0603DRD077K5L@V
	R	4134,4234,4334,4434	RC0402JR-071KL@V
	R	4135,4235,4335,4435	RC0402JR-0710KL@V
	R	4136-4143,4236-4243	RC0603DR-075K6L@V
	R	4144-4147,4244-4247	RC0603DR-071K6L@V
	R	4148-4151,4248-4251	RC0603DR-07330RL@V
	R	4152-4155,4252-4255	RC0603JR-07220RL@V
	R	4158,4159,4258,4259	RC0603DR-07330KL@V
	R	4216,4218,4316,4318	RC0402JR-0747RL@V
	R	4220,4221,4224,4225	RT0603DRD072K2L@V
	R	4257,4356,4357,4456	RT0603DRD071KL@V
	R	4301,4302,4401,4402	RT0603DRD07100RL@V
	R	4303,4304,4403,4404	RC0603JR-07100RL@V
	R	4307,4308,4407,4408	RC0603JR-071K2L@V
	R	4310,4313,4410,4413	RT0603DRD07470RL@V
	R	4311,4312,4411,4412	RT0603DRD0747KL@V
	R	4314,4315,4414,4415	RT0603DRD071K2L@V
	R	4317,4319,4417,4419	RT0603DRD07220RL@V
	R	4320,4321,4324,4325	RT0603DRD072K2L@V
	R	4322,4323,4422,4423	RC0603DR-0747KL@V
	R	4326,4327,4426,4427	RT0603DRD0791KL@V
	R	4328,4329,4428,4429	RT0603DRD077K5L@V
	R	4336-4343,4436-4443	RC0603DR-075K6L@V
	R	4344-4347,4444-4447	RC0603DR-071K6L@V
	R	4348-4351,4448-4451	RC0603DR-07330RL@V

Mark	No.	Description	Part No.
	R	4352-4355,4452-4455	RC0603JR-07220RL@V
	R	4358,4359,4458,4459	RC0603DR-07330KL@V
	R	4416,4418,4507,4508	RC0402JR-0747RL@V
	R	4420,4421,4424,4425	RT0603DRD072K2L@V
	R	4457	RT0603DRD071KL@V
	R	4501,4513,4611,4747	RC0402JR-07100RL@V
	R	4504,4505,4511,4516	RC0402JR-0710KL@V
	R	4506,4518,4703	RC0603JR-070RL@V
	R	4509,4510,4514,4515	RC0402JR-070RL@V
	R	4517,4523	RC0402JR-0710KL@V
	R	4519,4520	RC0402JR-0747RL@V
	R	4521,4522,4608-4610	RC0402JR-070RL@V
	R	4601,4602	RC0603DR-0747KL@V
	R	4603,4604,4717-4720	RC0603DR-073K3L@V
	R	4605,4606,4737,4738	RC0603DR-071K8L@V
	R	4607,4743	RC0402JR-07330RL@V
	R	4701,4702 (6.8 kohm)	DCN1212
	R	4707-4714	RC0603JR-07100RL@V
	R	4715,4716	RC0603DR-076K8L@V
	R	4721,4723,4727,4728	RT0603DRD071K5L@V
	R	4722,4724,4730,4732	RT0603DRD074K7L@V
	R	4725,4726	RC0603DR-07820RL@V
	R	4729,4731	RC0402JR-07150RL@V
	R	4733,4734	RC0603DR-073K3L@V
	R	4739,4740	RC0603DR-0716KL@V
	R	4741,4742	RC0603DR-07220RL@V
	R	4744-4746	RC0402JR-070RL@V
	VR 5001,5002	ROTARY VR	DCS1123

CAPACITORS

	C	4003,4520,4541 (0.1 uF)	DCE1062
	C	4004	0402B102K500CT
	C	4006-4009,4021,4612	0402B104K160CT
	C	4010	CEAT220M50
	C	4014,4135,4136	0603B104K500CT
	C	4015,4017 (0.033 uF)	DCE1041
	C	4016,4019,4133,4134 (220 uF/25 V)	DCH1358
	C	4018 (0.1 uF)	CCG1321
	C	4020,4139-4142 (100 uF/25 V)	DCH1357
	C	4022,4025,4510,4531 (1 uF)	DCG1109
	C	4023,4024,4509,4515	0805X475K250CT
	C	4028 (1000 pF)	ACE7099
	C	4101,4103,4201,4203	0603N102J500CT
	C	4102,4104,4131,4132	0603B103K500CT
	C	4105,4106,4109,4110	0402N221J500CT
	C	4107,4108,4207,4208 (1000 pF)	DCG1094
	C	4111,4112,4211,4212 (100 pF)	DCG1082
	C	4113,4114,4213,4214 (220 uF/25 V)	DCH1369
	C	4115,4116,4215,4216	0603B223K500CT
	C	4123,4124,4223,4224 (0.033 uF)	DCE1028
	C	4129,4130,4229,4230 (0.01 uF)	ACE7097
	C	4137,4138,4233,4234 (220 uF/25 V)	DCH1358
	C	4143-4146,4243-4246 (560 pF)	DCG1091
	C	4147-4150,4235,4236	0603B104K500CT
	C	4151,4152,4251,4252 (2200 pF)	DCG1098
	C	4153,4253,4353,4453 (0.01 uF)	DCG1101
	C	4154,4254,4354,4454 (10 uF/50 V)	DCH1377
	C	4155,4156,4255,4256 (0.01 uF)	DCE1057
	C	4202,4204,4231,4232	0603B103K500CT
	C	4205,4206,4209,4210	0402N221J500CT

Mark	No.	Description	Part No.
	C	4237,4238,4333,4334 (220 uF/25 V)	DCH1358
	C	4239-4242,4339-4342 (100 uF/25 V)	DCH1357
	C	4247-4250,4335,4336	0603B104K500CT
A	C	4301,4303,4401,4403	0603N102J500CT
	C	4302,4304,4331,4332	0603B103K500CT
	C	4305,4306,4309,4310	0402N221J500CT
	C	4307,4308,4407,4408 (1000 pF)	DCG1094
	C	4311,4312,4411,4412 (100 pF)	DCG1082
	C	4313,4314,4413,4414 (220 uF/25 V)	DCH1369
	C	4315,4316,4415,4416	0603B223K500CT
	C	4323,4324,4423,4424 (0.033 uF)	DCE1028
	C	4329,4330,4429,4430 (0.01 uF)	ACE7097
	C	4337,4338,4433,4434 (220 uF/25 V)	DCH1358
B	C	4343-4346,4443-4446 (560 pF)	DCG1091
	C	4347-4350,4435,4436	0603B104K500CT
	C	4351,4352,4451,4452 (2200 pF)	DCG1098
	C	4355,4356,4455,4456 (0.01 uF)	DCE1057
	C	4402,4404,4431,4432	0603B103K500CT
	C	4405,4406,4409,4410	0402N221J500CT
	C	4437,4438 (220 uF/25 V)	DCH1358
	C	4439-4442,4613,4618 (100 uF/25 V)	DCH1357
	C	4447-4450,4505,4512	0603B104K500CT
	C	4501,4522 (47 uF/10 V)	DCH1375
	C	4502,4523,4851,4852 (0.01 uF)	DCE1038
C	C	4503,4524,4619,4727	0402B103K500CT
	C	4506,4513,4527,4534	0603B103K500CT
	C	4507,4514,4528,4535	0603N102J500CT
	C	4508,4511,4516,4517 (1000 pF)	DCG1094
	C	4521,4542 (100 uF/10 V)	DCH1376
	C	4526,4533,4543-4545	0603B104K500CT
	C	4529,4532,4537,4538 (1000 pF)	DCG1094
	C	4530,4536	0805X475K250CT
	C	4546,4549,4621,4624	0603B103K500CT
	C	4547,4550,4552,4554	0603N102J500CT
	C	4548,4603,4604,4620	0603B104K500CT
D	C	4551,4553,4738,4740	0603N101J500CT
	C	4605,4606 (47 uF/35 V)	DCH1379
	C	4609,4610 (10 uF/50 V)	DCH1377
	C	4611,4614 (22 uF/50 V)	DCH1378
	C	4615-4617,4762	0402B104K160CT
	C	4622,4625,4629,4701	0603N102J500CT
	C	4623,4626,4627,4731	0603B104K500CT
	C	4628,4702,4704,4771	0603B103K500CT
	C	4703,4737,4739,4741	0603N102J500CT
	C	4705,4706 (2 uF/50 V)	DCH1363
E	C	4707-4710	0603N222J500CT
	C	4715,4720 (100 uF/25 V)	DCH1357
	C	4716-4719	0402N102J500CT
	C	4721,4722	0402N471J500CT
	C	4723,4724,4733,4734	0402N821J500CT
	C	4728,4769	0402B103K500CT
	C	4732,4757,4758,4770	0603B104K500CT
	C	4735,4736,4759	CEJQNP100M35
	C	4742,4744,4746,4748	0603N101J500CT
	C	4743,4745,4747,4749	0603N102J500CT
	C	4750	0603N101J500CT
F	C	4751,4752	0402N101J500CT
	C	4760,4761,4764	CEJQ100M35
	C	4763,4768	CEJQ470M16
	C	4765-4767	0402B104K160CT
	C	4772,4775,4853,4903	0603N102J500CT
	C	4773,4776,4954	0603B104K500CT
	C	4774,4855,4905,4955	0603B103K500CT
	C	4901,4902,4951,4952 (0.01 uF)	DCE1038
	C	4953	0603N102J500CT
	C	5051,5053,5055 (1 uF)	DCG1109
	C	5052 (22 uF)	DCG1110
	C	5054,5056 (0.1 uF)	DCG1104

AOUTB ASSY
Consists of
AOUT ASSY
HPPW ASSY
RTNJ ASSY

C I M

SEMICONDUCTORS

⚠	IC	5101	MM3571A12P
	IC	5102,5103	TC7SH08FUS2
	IC	5104	TC7SZ08FUS2
	IC	5202	ES9026PRO@V
	IC	5301,5302,5501,5502	OPA1678ID
NSP	IC	5303,5304	MUSES8920KX7@V
	IC	5401,5402,5601	NJM2068MD
	IC	5403,5404,5602,5603	NJM8080RB1S1
	IC	5503,5504,5801,5802	NJM2068D
⚠	IC	5701	BD9851EFV
	Q	5301,5801,5803,5805	LSCR523UB
	Q	5302-5305,5401-5404	INC2002AC1
	Q	5501-5504,5601,5602	INC2002AC1
⚠	Q	5701,5702	RSQ030P03
	Q	5802,5804,5806,5808	LSAR523UB
	Q	5807,5817,5818	LSCR523UB
	Q	5809,5811,5813,5815	KTC3209
	Q	5810,5812,5814,5816	KTA1281
	Q	5819,5820	LTC124EUB
	Q	5821-5824	LSAR523UB
	D	5301,5302,5401,5402	1SS355L@V
	D	5701-5703	RB162MM-40TF
	D	5801-5810	1SS355L@V
	D	5901,5902	DF2B18FU

MISCELLANEOUS

	L	5701,5702 POWER INDUCTOR	ATH7011
	JA	5301,5302 CANON CONNECTOR	DKB1093
	JA	5401 4P PIN JACK	DKB1090
	JA	5501 6.5 DIA JACK	DKN1669
	JA	5502,5901 6.5 DIA JACK	DKN1700
	JA	5601,5602,5902 6.5 DIA JACK	DKN1699
	KN	5801,5802 WRAPPING TERMINAL	CKF1089
	RY	5301,5302,5801,5802 RELAY	DSR1023
	CN	5101 CONNECTOR	HWW-L0920-J1@V
	CN	5102 CONNECTOR	VKN2050
	CN	5103 CONNECTOR	HWW-SL0320-J1@V
	CN	5701 CONNECTOR	HWW-L0420-J1@V
	CN	5801 19P CONNECTOR	VKN1423
	CN	5802 CONNECTOR	HWW-L0320-J1@V
	CN	5803 CONNECTOR	HWW-L0620-J1@V
	CN	5901 CONNECTOR	HWW-R0420-J1@V
		1001 CANON SHIELD	DNF1789

Mark	No.	Description	Part No.
	1002-1004	PHONE SHIELD	DNF1875
VA	5301-5306,5401-5405	VARISTORS	EZJZ1V270RM
VA	5501-5505,5601-5603	VARISTORS	EZJZ1V270RM
VA	5901	VARISTORS	EZJZ1V270RM

RESISTORS

R	5101,5213,5215,5216	RC0402JR-070RL@V
R	5102,5103	RC0402JR-0747RL@V
R	5104	RT0603DRD0782RL@V
R	5203	RT0603DRD071K5L@V
R	5204	RT0603DRD071KL@V
R	5219,5351-5354	RC0603JR-070RL@V
R	5301-5304	RT0603DRD073K3L@V
R	5305-5308	RT0603DRD07680RL@V
R	5313-5320,5403,5404	RC0603DR-071K8L@V
R	5321-5328,5447,5448	RC0603DR-073K3L@V
R	5329-5332,5529-5532 (330 ohm)	DCN1200
R	5333-5336,5533-5536	RC0603JR-074K7L@V
R	5337	RC0402JR-071KL@V
R	5338,5713	RC0402JR-0710KL@V
R	5339-5342,5537-5540	RC0603JR-0710KL@V
R	5343-5346,5431-5434	RC0603JR-0718KL@V
R	5347-5350,5435-5438	RC0603JR-0722RL@V
R	5401,5402,5405,5406	RC0603DR-074K7L@V
R	5407,5408,5513-5520	RC0603DR-071K8L@V
R	5409-5412	RC0603DR-073K6L@V
R	5417-5420	RC0603DR-073K9L@V
R	5421-5424,5449,5450	RC0603DR-07680RL@V
R	5425-5428,5615,5616	RC0603JR-07100KL@V
R	5429,5430	RC0402JR-0747KL@V
R	5451,5452,5501-5504	RC0603DR-073K3L@V
R	5453,5454,5505-5508	RC0603DR-07680RL@V
R	5521-5528,5625,5626	RC0603DR-073K3L@V
R	5541-5544,5617,5618	RC0603JR-0718KL@V
R	5545-5548,5619,5620	RC0603JR-0722RL@V
R	5601,5602,5605,5606	RC0603DR-074K7L@V
R	5603,5604,5607,5608	RC0603DR-071K8L@V
R	5613,5614,5627,5628	RC0603DR-07680RL@V
R	5629,5630,5803-5810	RC0603DR-073K3L@V
R	5631,5632	RC0603DR-07680RL@V
R	5702	RC0402DR-0715KL@V
R	5703,5710,5718	RC0402DR-0710KL@V
R	5704	RC0402DR-0747KL@V
R	5705,5716	RC0402DR-0730KL@V
R	5706,5717	RC0402DR-0768KL@V
R	5707	RC0402DR-076K2L@V
R	5708	RC0402JR-070RL@V
R	5709	RC0402DR-07220RL@V
R	5711	RC0603JR-07100RL@V
R	5712	RC0402JR-074K7L@V
R	5714	RC0603JR-0722RL@V
R	5715	RC0402JR-075K1L@V
R	5719	RC0402DR-0756KL@V
R	5720	RC0402DR-071KL@V
R	5721	RC0402DR-073K9L@V
R	5723	RC1206JR-070RL@V
R	5801	RC0402JR-07100RL@V
R	5811,5813,5815,5817	RC1206JR-07390RL@V
R	5812,5814,5816,5818	RC1206JR-07270RL@V
R	5819-5826	RC0603JR-074K7L@V
R	5827-5834	RC0603DR-071KL@V
R	5835-5842	RC0603DR-071K2L@V
R	5843-5866	RC0805JR-0724RL@V
R	5867-5870	RC0603JR-07100KL@V
R	5871-5875	RC0402JR-072K2L@V
R	5876-5879,5881,5883	RC0603JR-0710KL@V
R	5880,5882,5884,5885	RC0603JR-0747KL@V
R	5886,5887	RC0603JR-0710KL@V
R	5888-5891	RC0603JR-0747KL@V
R	5901,5902	RC0603DR-07100RL@V

CAPACITORS

C	5101,5108,5301,5302 (220 uF/25 V)	DCH1358
C	5102,5106,5303,5304 (0.033 uF)	DCE1041
C	5104,5109,5120 (0.01 uF)	DCG1101
C	5107,5117,5118,5710	0402B104K160CT
C	5110,5305-5308,5401 (100 uF/25 V)	DCH1357
C	5111,5223,5224 (1000 pF)	DCG1094
C	5112,5222,5317-5320 (0.1 uF)	DCG1104
C	5113 (22 uF)	DCG1110
C	5115 (1 uF)	DCG1109
C	5119,5203,5204,5215 (0.1 uF)	DCE1062
C	5122,5201,5202 (47 uF/10 V)	DCH1375
C	5208,5236,5411-5414	0603B104K500CT
C	5210,5212,5217,5219	0603B103K500CT
C	5211,5213,5218,5220	0603N102J500CT
C	5214 (100 uF/10 V)	DCH1376
C	5225,5242	0402B103K500CT
C	5226-5233 (1000 pF)	DCG1094
C	5234,5347,5348,5426	0603B103K500CT
C	5235,5345,5346,5425	0603N102J500CT
C	5243,5423,5424,5905	0402N102J500CT
C	5244,5519-5526	0402N101J500CT
C	5309-5312,5507-5510 (3300 pF)	DCG1100
C	5313-5316,5539-5542 (47 pF)	DCG1090
C	5325-5328,5333-5336 (100 pF)	DCG1082
C	5329-5332 (0.1 uF)	DCG1104
C	5337-5340,5801-5806 (220 uF/25 V)	DCH1358
C	5341-5344 (1000 pF)	DCE1032
C	5402,5405,5408,5419 (100 uF/25 V)	DCH1357
C	5417,5418,5609,5610	CEAT101M16
C	5420,5503-5506 (100 uF/25 V)	DCH1357
C	5421,5422,5611,5612	0603N222J500CT
C	5427-5430,5501,5502	0603B104K500CT
C	5431,5432,5435,5436	0603N332J500CT
C	5433,5434,5437,5438	0402N471J500CT
C	5511-5514,5621,5622	0402N471J500CT
C	5515-5518,5527,5528	0603B104K500CT
C	5531-5534,5807	0402N101J500CT
C	5535-5538,5809-5812 (100 uF/25 V)	DCH1357
C	5543,5613,5842,5844	0603N102J500CT
C	5544,5614,5841,5843	0603B103K500CT
C	5607,5608,5615-5618	0603B104K500CT
C	5619,5620,5623,5624	0603N332J500CT
C	5625,5626,5727	0402N471J500CT
C	5701 (0.033 uF)	DCE1041
C	5702	0402N391J500CT
C	5703	0402B223K160CT
C	5705	0603X474K250CT
C	5706	0603B334K100CT

Mark	No.	Description	Part No.
	C	5707,5712,5713,5715	0805X106K250CT
	C	5709	0402N561J500CT
	C	5714,5717	0402X105K160CT
	C	5716	0805X475K250CT
	C	5720	0402B682K500CT
	C	5721,5722	0402B104K160CT
	C	5723,5725,5837-5840	0805X106K160CT
	C	5724,5726,5730	1206X226K160CT
	C	5728,5729 (47 uF/35 V)	DCH1379
	C	5813-5816 (100 pF)	DCG1082
	C	5817-5820,5903,5904	0402N101J500CT
	C	5822-5825,5829-5836	0603B104K500CT
	C	5845,5847,5902	0603B103K500CT
	C	5846,5848,5901	0603N102J500CT
	C	5906	0402N102J500CT

MOTHER ASSY
Consists of
MAIN ASSY
USBA ASSY
USBBC ASSY

D F H

SEMICONDUCTORS

Mark	No.	Description	Part No.
⚠	IC	201-205	MM3542BF
⚠	IC	207	MM3479A25P
⚠	IC	208,214	S-1170B33UC-OTS
⚠	IC	209,210,216	UA78M33IKVUG3
⚠	IC	211	BD9E302EFJ@V
⚠	IC	213	BU18TD3WG-G@V
	IC	401,502	S-80930CNMC-G80
NSP	IC	402,2801	MIMXRT1062DVJ6B@V
	IC	503	DYW2304*
	*Part number of the initial firmware equipped		
NSP	IC	601	MFI343S00176@V
	IC	604	W9864G6KH-5
⚠NSP	IC	801	TPS65911AA2NMA@V
NSP	IC	901	66AK2G12ABYA100
⚠	IC	1301	LP2996AMR
NSP	IC	1302,1303	W631GU6NB-11@V
	IC	1401,1404,1406	TC7SH08FUS2
NSP	IC	1402	DYW2305*
	*Part number of the initial firmware equipped		
	IC	1403,1901	TC7SZ08FUS2
	IC	1405,1707,1912,1913	TC74VHC08FK
	IC	1701-1704,1907,1910	TC7SH08FUS2
	IC	1705,1706	TC7WH157FKS1@V
	IC	1903	SI5351C-B03300GM
	IC	1904,1905	74VHC163FT
	IC	1906	TC7SH04FUS2
	IC	1909,2201,2304	TC74LCX08FK
	IC	1911,1915,1916,2301	TC7SH08FUS2
	IC	1919,1920	TC74VHC08FK
	IC	2202,2203	PCM1789PWR@V
	IC	2204,2205	NJM4580MD
	IC	2302,2303,2501,2502	TC7WU04FUS1@V
	IC	2305,2306,2503,2504	PCM9211PT@V
	IC	2307,2310,3603-3606	TC7SH08FUS2
	IC	2308,2309,2505,2506	CS8421-CZ
	IC	2701,3103	CS8421-CZ
	IC	2702	PCM9211PT@V
	IC	2703	NLV74VHCU04DT
	IC	2901	DYW2306*
	*Part number of the initial firmware equipped		
	IC	3102	W9825G6KH-6@V
NSP	IC	3104	RTL8304E-CG
⚠	IC	3301	NJM2374AM
	IC	3601,3602	TS3USB221ERSER@V
	IC	3607,3608	TUSB213RGY
	Q	1,3301	LTC014EEB
	Q	2,223,1704,3102	RTQ040P02
	Q	201,203,206-209	LSAR523UB
	Q	202,602,1101,1401	LTC024EEB
	Q	204,205	2SA1576A
	Q	211,213-215,502	LSAR523UB
	Q	212,216,218,220	LSCR523UB
	Q	217	RT3N22M
	Q	219	LTC014YEB
⚠	Q	221	RTQ040P02
	Q	222	LTC114YUB
	Q	501,601	LTA024EEB
	Q	503,504,1703,1801	LTC124EUB
⚠	Q	801	CSD87330Q3D
	Q	1102	ISA1602AM1
	Q	1103,1104	IMX25
	Q	1105,1106	2SB1188
	Q	1701,1702,1802,2901	LTC024EEB
	Q	1901,2103-2105,3101	LTC124EUB
	Q	2106,2107	LSC4081UB
	Q	2108-2110	LSA1576UB
⚠	Q	3103	2SB1188
	Q	3302	RTQ040P02
	Q	3303,3304	2SC5876U3@V
	Q	3305	RQ5L015SP@V
	Q	3601-3604	INC2002AC1
	Q	3605-3608	LTC024EEB
	Q	3609-3612	LTC043EEB
	D	1,204,206-208	1SS355L@V
	D	210-214,216-218	1SS355L@V
	D	220,222,224,225	1SS355L@V
⚠	D	221	UDZV7R5
	D	228-232,3301	1SS355L@V
	D	601,1401,1801,2901	FC-1608SXK630D08
	D	2301,2302,2501,2502	DF2B18FU
	D	2701-2704,3503,3504	EZAEG2N50A
⚠	D	3102	RR264M-400
⚠	D	3302-3304	RB162MM-40TF
	D	3305	RB162MM-40TF
	D	3501,3502,3605-3612	DF2B5M4CT@V
	D	3601,3602,3613,3615	AVRH10C101K1R1NE@V
	D	3603,3604,3614,3616	EZAEG2N50A

MISCELLANEOUS

	L	3 COIL	ATH7022
	L	201,202 SMD SPL INDUCTOR	CTH1597
	L	203,204 CHOKE COIL(100 uH)	DTH1229
	L	205 SMD SPL INDUCTOR	CTH1521
	L	206 SMD SPL INDUCTOR	OTL8042
	L	402,2802 POWER INDUCTOR	ATH7047
	L	801 CHOKE COIL (3.6 uH)	CTH1479

Mark	No.	Description	Part No.
	L	802-804 SMD SPL INDUCTOR	CTH1531
	L	806 SMD FERRITE BEADS	DTF1126
	L	901-910 SMD FERRITE BEADS	DTF1123
	L	1101-1122 SMD FERRITE BEADS	DTF1124
	L	3101,3102 SMD FERRITE BEADS	DTF1129
	L	3301 CHOKE COIL (100 uH)	DTH1228
	L	3601,3602 COIL	ATH7015
	F	3102 EMI FILTER	DTL1106
	F	3103,3104 COMMON MODE FILTER	DTH1227
	JA	2301,2501 RCA JACK	DKB1132
	JA	2701 1P PIN JACK	PKB1045
	JA	3101 RJ45 CONNECTOR	VKN2023
	JA	3501 USB JACK	DKB1118
	JA	3601,3602 USB JACK	DKN1694
	JA	3603,3604 CONNECTOR	DKN1607
	KN	1 SCREW PLATE	VNE1948
	KN	2-11 WRAPPING TERMINAL	CKF1089
	KN	3501,3502 WRAPPING TERMINAL	CKF1089
	KN	3601,3603 STAY	DNG1155
	KN	3602,3604 WRAPPING TERMINAL	CKF1089
	T	3101,3102 TRANSFORMER	DTX1012
	X	502,2901 RESONATOR (24 MHz)	CSS1773
	X	1401 CRYSTAL OSCILLATOR (24 MHz)	DSS1229
	X	1701 CRYSTAL OSCILLATOR (50 MHz)	DSS1231
NSP	X	1901 OSCILLATOR (25 MHz)	DSS1236
	X	3101 CRYSTAL (25MHZ)	DSS1205
	CN	1,2 FFC/FPC CONNECTOR	CKS6543
	CN	3,3601 CONNECTOR	HWW-SL1620-J1@V
	CN	4 19P CONNECTOR	VKN1423
	CN	5,13 CONNECTOR	VKN2050
	CN	6 CONNECTOR	HWW-L0820-J1@V
	CN	7,11 CONNECTOR	HWW-SL0920-J1@V
	CN	8 CONNECTOR	HWW-L0520-J1@V
	CN	9,3501 CONNECTOR	HWW-SL1020-J1@V
	CN	10 CONNECTOR	HWW-SL0620-J1@V
	CN	12 CONNECTOR	HWW-SL0520-J1@V
NSP	U	2901 WI-FI MODULE	SX-SDMAC2832S+@V
	VL	2701 TRANSFORMER	DTX1016

RESISTORS

	R	1-22,24-42	RC0402JR-070RL@V
	R	23,77	RC1206JR-070RL@V
	R	44-49,263,322	RC0603JR-070RL@V
	R	55,326,614,616	RC0402JR-0722RL@V
	R	60,62,265,266	RC0402JR-0710KL@V
	R	61,206-209,212	RC0402JR-07100KL@V
	R	66,817,818	RC0805JR-070RL@V
	R	73,76,254,261	RC0402JR-070RL@V
	R	210,211,258,3155	RC0402DR-0727KL@V
	R	213	RC0402DR-0762KL@V
	R	214	RC0402DR-0733KL@V
	R	215	RC0402DR-0716KL@V
	R	216,225	RC0402DR-0711KL@V
	R	217,223,226	RC0603DR-07560RL@V
	R	218,221,224,227	RC0402DR-072K2L@V
	R	219,1184	RC0402DR-078K2L@V
	R	220	RC0402DR-0751RL@V
	R	222	RC0402DR-0722KL@V
	R	228,2238-2245	RC0603DR-076K8L@V
	R	229	RC0603DR-0775RL@V
	R	230,296,2367,2370	RC0402DR-072K2L@V
	R	232,276,284,2316	RC0402JR-072K2L@V
	R	234-236,239,240	RC1206JR-072R2L@V
	R	238,269,523,524	RC0402JR-07100KL@V
	R	242,272,280,295	RC0402JR-074K7L@V
	R	248,289,617,2105	RC0402JR-0722KL@V
	R	249,268,311,327	RC0402JR-0733KL@V
	R	252,2368,2371,2555	RC0402DR-0718KL@V
	R	253,255,257	RC0402DR-0710KL@V
	R	256	RC0402DR-0712KL@V
	R	259	RC0402DR-07120KL@V
	R	260	RC0402DR-0739KL@V
	R	262,271,294,302	RC0402JR-070RL@V
	R	267,807	RC0402JR-0712KL@V
	R	270,281,306,1495	RC0402JR-073K3L@V
	R	273	RC0402JR-071K5L@V
	R	274,297	RC0402JR-07510RL@V
	R	277,285,1181	RC0402JR-072K7L@V
	R	278,286,2314,2315	RC0402JR-07470RL@V
	R	279,303	RC0402JR-075K1L@V
	R	287	RC0402DR-076K8L@V
	R	288	RC0402JR-0715KL@V
	R	290,402,504,515	RC0402JR-0747KL@V
	R	292	RC0402DR-0775KL@V
	R	293	RC0402DR-0724KL@V
	R	300	RC0402DR-0715KL@V
	R	301	RC0402DR-0743KL@V
	R	304,314,320,328	RC0402JR-070RL@V
	R	305,312,315,316	RC0402JR-074K7L@V
	R	307,2301,2302,2501	RC0402DR-0775RL@V
	R	308,3649,3650,3655	RC0402DR-071K5L@V
	R	309	RC0402DR-073K9L@V
	R	310	RC0402JR-07120RL@V
	R	317,1141,1142,1153	RC0402JR-07220RL@V
	R	318	RC0402DR-0782KL@V
	R	324,325,331,502	RC0402JR-0710KL@V
	R	329,336,338-340	RC0402JR-070RL@V
	R	330,606,608,613	RC0402JR-071KL@V
	R	335,2715	RC0402DR-07150KL@V
	R	337	RC0402JR-0739KL@V
	R	342,517-522,528	RC0402JR-070RL@V
	R	403,506,540,813	RC0402JR-07100RL@V
	R	501,503,505,546	RC0402JR-0747RL@V
	R	507-512,537,541	RC0402JR-0756RL@V
	R	513	RC0402JR-0727KL@V
	R	514,527,538,539	RC0402JR-0710KL@V
	R	516,2910	RC0603JR-072M2L@V
	R	526,529,565-577	RC0402JR-0747KL@V
	R	530,533,535,536	RC0402JR-070RL@V
	R	531,532,534,623	RC0402JR-07100KL@V
	R	543,544,548-563	RC0402JR-0756RL@V
	R	545,624,643,645	RC0402JR-0710KL@V
	R	601-604,618,621	RC0402JR-070RL@V
	R	607,609,619,1464	RC0402JR-0756RL@V
	R	610-612,1167,1309	RC0402JR-074K7L@V
	R	615,1493,1500,1505	RC0402JR-071KL@V
	R	620,2107,2108	RC0402JR-0747KL@V
	R	629-632,636,637	RC0402JR-070RL@V
	R	647,1438-1442	RC0402JR-0747RL@V
	R	672,806,809,811	RC0402JR-0710KL@V

Mark	No.	Description	Part No.
	R	673,675,678,684	RC0402JR-070RL@V
	R	674,1420,1434,1435	RC0402JR-0722RL@V
A	R	680,681,686,687	RAB4CQ220J
	R	801-804,808,901	RC0402JR-070RL@V
	R	814,816,1104,1107	RC0402JR-0710KL@V
	R	1110,1116,1120-1122	RC0402JR-0710KL@V
	R	1124,1125,1127,1128	RC0402JR-0710KL@V
	R	1130-1134,1136-1140	RC0402JR-0710KL@V
	R	1143,1302-1305,1401	RC0402JR-0710KL@V
	R	1144-1152,1156-1164	RC0402JR-07330RL@V
	R	1154,2378,2381,2565	RC0402JR-07220RL@V
	R	1155,1166	RAB4CQ472J
B	R	1168	RAB4CQ222J
	R	1169	RC0603JR-07100KL@V
	R	1170	RC0603JR-078K2L@V
	R	1171	RAB4CQ473J
	R	1172,1174	RC0603DR-07120RL@V
	R	1173,1175	RC0603DR-07150RL@V
	R	1176,1177	RC0603DR-07510RL@V
	R	1178,1179,2362,2363	RC0402FR-071KL@V
	R	1180,1185	RC0402DR-0715RL@V
	R	1182	RC0402JR-073KL@V
	R	1183	RC0402DR-079K1L@V
C	R	1306,1307,1312,1316	RC0402FR-07240RL@V
	R	1308,1402,1406,1407	RC0402JR-070RL@V
	R	1310,1315,1417,1480	RC0402JR-07100RL@V
	R	1314,1465,1469,1483	RC0402JR-074K7L@V
	R	1318-1341	RC0402DR-0739RL@V
	R	1403,1404,1408,1410	RC0402JR-0710KL@V
	R	1413,1414,1416,1421	RC0402JR-07100KL@V
	R	1415,1427,1428,1430	RC0402JR-0710KL@V
	R	1418,1425,1426,1429	RC0402JR-070RL@V
	R	1419,1422,1736-1739	RC0402JR-0733RL@V
	R	1423,1424,2929,2930	RC0402JR-07100KL@V
D	R	1431,1437,1443,1456	RC0402JR-070RL@V
	R	1432,1436,1444,1454	RC0402JR-0710KL@V
	R	1445-1449,1461,1462	RC0402JR-0747RL@V
	R	1450-1453	RC0402JR-07130RL@V
	R	1455,1457,1458,1460	RC0402JR-0710KL@V
	R	1463,1477,1507	RC0402JR-070RL@V
	R	1467,1472-1474,1478	RC0402JR-0747RL@V
	R	1471,1488,1506,1509	RC0402JR-0710KL@V
	R	1475,1484-1487	RC0402JR-0722RL@V
	R	1479,1517-1522,1524	RC0402JR-0747RL@V
	R	1482,1728,1732,1829	RC0402JR-07100RL@V
E	R	1489-1492,1496,1497	RC0402JR-0722RL@V
	R	1494,1529-1532,1543	RC0402JR-074K7L@V
	R	1498,1499,1501,1502	RC0402JR-073K3L@V
	R	1504,1711-1714	RC0402JR-073K3L@V
	R	1510-1514,1724,1733	RC0402JR-070RL@V
	R	1515,1523,1526	RC0402JR-0722RL@V
	R	1525,1527,1528,1821	RC0402JR-0747RL@V
	R	1533-1542,1544,1725	RC0402JR-0722RL@V
	R	1705,1706,1717,1718	RC0402JR-0710KL@V
	R	1707-1710	RC0402JR-071K8L@V
F	R	1715,1716,1727,1903	RC0402JR-0756RL@V
	R	1719,1720	RC0402FR-07200RL@V
	R	1721,1722,1729,1731	RC0402JR-0710KL@V
	R	1723	RC0402FR-073KL@V

Mark	No.	Description	Part No.
	R	1726,1730,1734,1846	RC0402JR-0722RL@V
	R	1735,1740,1744,1745	RC0402JR-070RL@V
	R	1743,3164	RC0402JR-0733KL@V
	R	1801,2911,2915,3118	RC0402JR-071KL@V
	R	1802,1809,1811,1813	RC0402JR-0710KL@V
	R	1803,1805,1807,1810	RC0402JR-070RL@V
	R	1815,1817,1818,1822	RC0402JR-0710KL@V
	R	1820,1825-1828,1834	RC0402JR-070RL@V
	R	1823,1824,1833,1835	RC0402JR-0710RL@V
	R	1830,1831,1839,1840	RC0402JR-0747RL@V
	R	1832,1906,3175,3179	RC0402JR-074K7L@V
	R	1836,1837,1843-1845	RC0402JR-070RL@V
	R	1838,1904,1905	RC0402JR-07100RL@V
	R	1841,1842,1849-1854	RC0402JR-0710KL@V
	R	1847,1848,1857	RC0402JR-070RL@V
	R	1855,1909,1911,1919	RC0402JR-0722RL@V
	R	1858,1908,2220,2221	RC0402JR-0710KL@V
	R	1859-1865,1868,1910	RC0402JR-070RL@V
	R	1902	RT0603DRD0756RL@V
	R	1912-1914,1918,1921	RC0402JR-07100RL@V
	R	1915,1926,2203,2204	RT0603DRD0768RL@V
	R	1916,1917,1927,2938	RC0402JR-0768RL@V
	R	1920,1922-1924	RC0402JR-0722RL@V
	R	1929,2310-2313	RC0603JR-0768RL@V
	R	1930-1935,2303	RC0402JR-0722RL@V
	R	1936-1945,1947,1948	RC0402JR-0747RL@V
	R	1953,1954,1963-1976	RC0402JR-0747RL@V
	R	2103,2205,2206,2209	RC0402JR-070RL@V
	R	2106,2111,2114,3167	RC0402JR-0722KL@V
	R	2109,2110	RC0402JR-07390KL@V
	R	2112,2113,2115,2116	RC0402JR-0711KL@V
	R	2117-2120,2308,2309	RC0402JR-0747KL@V
	R	2201,2202,2207,2208	RC0402JR-07100RL@V
	R	2218,2219,2327,2329	RC0402JR-07100RL@V
	R	2222-2229	RC0603DR-0713KL@V
	R	2230-2237	RC0603DR-0715KL@V
	R	2246,2247	RC0402JR-07220KL@V
	R	2306,2307,2505,2506	RC0402JR-0710RL@V
	R	2317,2511,2512	RC0402JR-072K2L@V
	R	2318,2319,2513,2514	RC0402JR-07680RL@V
	R	2320-2323	RC0603JR-0768RL@V
	R	2326,2328,2330-2335	RAB4CQ103J
	R	2336,2337,2386,2387	RC0402JR-07100RL@V
	R	2338,2339,2517,2519	RAB4CQ103J
	R	2340,2341,2531,2532	RC0402JR-0710KL@V
	R	2343,2344,2350,2351	RC0402JR-070RL@V
	R	2345,2352,2536,2543	RC0402JR-0747RL@V
	R	2346-2348,2353-2359	RC0402JR-0722RL@V
	R	2360,2361,2366,2369	RC0402JR-0747KL@V
	R	2364,2365,2551,2552	RC0402FR-07100KL@V
	R	2372,2373,2507,2508	RC0402JR-0747KL@V
	R	2374,2375,2561,2562	RC0402FR-0727KL@V
	R	2376,2377,2379,2380	RC0402JR-070RL@V
	R	2382-2385,2537-2539	RC0402JR-0722RL@V
	R	2502	RC0402DR-0775RL@V
	R	2509,2510	RC0402JR-07470RL@V
	R	2518,2520,2527,2528	RC0402JR-07100RL@V
	R	2521-2526,2529,2530	RAB4CQ103J
	R	2534,2535,2541,2542	RC0402JR-070RL@V

Mark	No.	Description	Part No.
R	2544-2546,2718-2722		RC0402JR-0722RL@V
R	2547,2548,2553,2556		RC0402JR-0747KL@V
R	2549,2550,2711,3150		RC0402FR-071KL@V
R	2554,2557,2713		RC0402DR-072K2L@V
R	2558,2714		RC0402DR-0718KL@V
R	2559,2560,2706,2712		RC0402JR-0747KL@V
R	2563,2564,2566,2567		RC0402JR-070RL@V
R	2568,3158		RC0402JR-07220RL@V
R	2569,2570,2703,2734		RC0402JR-07100RL@V
R	2702,2704,2705		RC0402JR-070RL@V
R	2708-2710,2730,2731		RC0402JR-070RL@V
R	2716		RC0402DR-07110KL@V
R	2717,2803,2909,2922		RC0402JR-0747KL@V
R	2723,2724,2733,2735		RAB4CQ103J
R	2725		RC0402JR-07680RL@V
R	2726,2944,2945,2966		RC0402JR-0722RL@V
R	2729,2963,2965,3106		RC0402JR-0747RL@V
R	2732,2931,2953-2955		RC0402JR-0710KL@V
R	2736		RT0603DRD07100RL@V
R	2737		RC0402JR-071K2L@V
R	2738-2741,2904,2905		RC0402JR-07100RL@V
R	2742,3142,3180,3652		RC0603JR-070RL@V
R	2744		RC0603JR-07220RL@V
R	2745		RC0603JR-07110RL@V
R	2806,2901,2919,2920		RC0402JR-070RL@V
R	2912-2914,2916-2918		RC0402JR-0756RL@V
R	2923-2925,2927,2928		RC0402JR-070RL@V
R	2926,2973-2984,3141		RC0402JR-0747KL@V
R	2933,2934,2936,3125		RC0402JR-07100KL@V
R	2935,2937,2940,2969		RC0402JR-070RL@V
R	2939,2941-2943		RC0402JR-0768RL@V
R	2964,2968,3107,3111		RC0402JR-0756RL@V
R	2971,3120,3144,3162		RC0402JR-070RL@V
R	2997,2998,3000,3002		RC0402JR-0710KL@V
R	3101-3104,3168-3173		RC0402JR-0722RL@V
R	3108,3109,3114-3116		RC0402JR-0710KL@V
R	3112,3129,3627,3628		RC0402JR-0756RL@V
R	3119,3121,3123,3126		RC0402JR-071KL@V
R	3127,3203,3301,3302		RC0402JR-0710KL@V
R	3136,3137,3160,3161		RAB4CQ220J
R	3151,3153,3607,3608		RC0402JR-0747KL@V
R	3152		RC0402FR-07100KL@V
R	3154		RC0402DR-074K7L@V
R	3159		RC0402FR-0727KL@V
R	3165,3166,3182,3198		RC0402JR-070RL@V
R	3181,3184,3187,3194		RC0402JR-074K7L@V
R	3183,3186,3189,3190		RC0402JR-0722RL@V
R	3193,3225		RC0402JR-0722RL@V
R	3196,3200-3202,3224		RC0402JR-074K7L@V
R	3199,3601-3604,3613		RC0402JR-070RL@V
R	3222,3223		RC0402FR-073K9L@V
R	3226-3233		RC0402DR-07100RL@V
R	3234-3237		RC0402JR-0775RL@V
R	3303		RC0402JR-07100KL@V
R	3304,3305		RC0805JR-071RL@V
R	3306	(330 ohm)	DCN1200
R	3307		RC0603DR-0775KL@V
R	3308		RC0402DR-072KL@V
R	3309-3312		RC0603JR-072KL@V

Mark	No.	Description	Part No.
R	3313		RC0402JR-0720KL@V
R	3314,3315		RC1206JR-072K2L@V
R	3316,3609,3610		RC0402JR-0710KL@V
R	3317		RC0402JR-076K8L@V
R	3318		RC0603JR-0722KL@V
R	3319		RC0603JR-0747KL@V
R	3322		RC0805JR-071K2L@V
R	3326	(6.8 kohm)	DCN1212
R	3605,3606		RC0402JR-074K7L@V
R	3614,3619,3620		RC0402JR-070RL@V
R	3615-3618		RC0603DR-075K1L@V
R	3621-3626		RC0402JR-071KL@V
R	3629-3642,3651,3657		RC0402JR-0710KL@V
R	3643,3645		RC0402JR-0724KL@V
R	3647,3653		RC0402DR-073K3L@V
R	3648,3654		RC0402DR-071K8L@V
R	3656		RC0402DR-071K5L@V
R	3658		RC0603JR-070RL@V
R	3659,3660		RC0402JR-07100RL@V
R	3923		RC0402JR-0756RL@V

CAPACITORS

C	2-5,24,50		0402B104K160CT
C	7,9,30,45		0603B104K500CT
C	12,15	(100 uF/25 V)	CCH2000
C	13,16,21	(0.01 uF)	DCG1101
C	18,902,2201	(100 uF/16 V)	DCH1365
C	23,26,28,29		0402N102J500CT
C	25,37	(0.1 uF)	DCE1062
C	27	(150 uF/16 V)	DCH1356
C	31		CEVW470M25
C	32,33	(0.033 uF)	DCE1041
C	34,35,284	(220 uF/25 V)	DCH1369
C	36,38,40,41	(1 uF)	DCG1109
C	39	(270 uF/16 V)	DCH1355
C	43,51,211-215		0402N102J500CT
C	44,47,48,61	(1 uF)	DCG1109
C	46,311,1901,2206	(0.1 uF)	DCG1104
C	201-205,305		1206X106K250CT
C	206-210,268		0603B104K500CT
C	221-225,245-249		0402B104K160CT
C	230-234		0603B153K500CT
C	250,417,447,601		0402N471J500CT
C	251,253		0402N821J500CT
C	252		0402N391J500CT
C	256		0402B222K500CT
C	260		0402N681J500CT
C	261-267,276,308		0402N102J500CT
C	270-272,281,288		0603B104K500CT
C	273-275,278-280		0805X106K250CT
C	277,282,283,285		0603X106K6R3CT
C	286,294,317,326		0805X475K250CT
C	287,336-340		0402B103K500CT
C	289,290,310,333		0402B104K160CT
C	291,304,354	(0.47 uF)	DCG1107s
C	292,297	(1 uF)	DCG1109
C	293,307,312,318		0603B104K500CT
C	295,299,303,810	(220 uF/6.3 V)	DCH1367
C	298	(0.047 uF)	DCE1027
C	300,355	(0.1 uF)	ACE7100

Mark	No.	Description	Part No.
	C	302,356 (0.01 uF)	CCG1318
	C	314	0402B682K500CT
	C	316,509,510,1422	0402N102J500CT
	C	320,325,415,618	0402X105K160CT
	C	321,323,2914,2916	0805X226M100CT
	C	327,2208-2211,2222	0603B104K500CT
	C	329,433,616,620	0603X106K6R3CT
	C	330,2719 (47 uF/35 V)	DCH1364
	C	341,402,403,405	0402B104K160CT
	C	342-345,426,505	0402B103K500CT
	C	350,2215,2217,2219	0603B103K500CT
	C	351-353,615,856	0402B102K500CT
	C	401,404,407,413	0603X475K100CT
	C	406,408-410,416	0402B104K160CT
	C	411,2810	CEVW220M6R3
	C	418,420,438,439	0603X475K100CT
	C	419,421-425	0402X224K160CT
	C	427-430,432	0402X224K160CT
	C	434-436,441-445	0402X224K160CT
	C	440,2838	CEVW220M16
	C	446,803,809,824	0603X475K100CT
	C	501,508,604,617	0402B104K160CT
	C	502	0402B473K160CT
	C	506,507,2902,2903	0402N5R0C500CT
	C	602	0402N471J500CT
	C	603,622-628,838	0402B103K500CT
	C	605	0603B222K500CT
	C	619,806,808	0402B104K160CT
	C	801,802,817,820	0805X106K250CT
	C	804,807,811	0805B105K250CT
	C	812-815,818	0402B104K160CT
	C	821-823,825,828	0402B104K160CT
	C	826,1305	0805X475K250CT
	C	827,2723,3307	0402N331J500CT
	C	829,831,832,834	0402B104K160CT
	C	830,2801,2804,2807	0603X475K100CT
	C	833,836,839,855	0603X106K6R3CT
	C	835,837,843,848	0402B104K160CT
	C	840-842,844,846	0402B103K500CT
	C	845,850,978	0402X225K160CT
	C	847,849,857,908	0402B103K500CT
	C	851,853,911-913	0402B104K160CT
	C	858-862,1701-1704	0402B102K500CT
	C	901,903,904	CEHVW101M6R3
	C	905,906,926,929	0402X105K160CT
	C	909,954-961,979	0402B103K500CT
	C	910 (680 uF/6.3 V)	DCH1360
	C	915-917,919-925	0402B104K160CT
	C	927,928,930,931	0402B104K160CT
	C	932,1315-1325	0402X224K160CT
	C	933-953,962-977	0402B104K160CT
	C	980,981,987,2814	0402X105K160CT
	C	982,984-986	0402B104K160CT
	C	983,1124,1313,1328	0402B103K500CT
	C	1301	CEHVW470M6R3
	C	1302-1304,1306,1311	0402B104K160CT
	C	1307-1310,1314,1329	0603X106K6R3CT
	C	1312,1326,1327	0402B104K160CT
	C	1330-1340,2817	0402X224K160CT
	C	1341-1364,1401,1403	0402B104K160CT
	C	1402,2212,2213,2314	0603X106K6R3CT
	C	1404,1421,1424,1430	0402B104K160CT
	C	1405-1407,1413,1414	0402B103K500CT
	C	1416-1420,1715,1716	0402B103K500CT
	C	1431,1903,1922,2312	0402N102J500CT
	C	1705-1710,1719,1721	0402B104K160CT
	C	1711-1714,1717,1718	0402B102K500CT
	C	1720,1912,1913,1915	0402B102K500CT
	C	1722,1724,1908-1911	0402B103K500CT
	C	1723,1904,1905,1914	0402B104K160CT
	C	1906	0402N100J500CT
	C	1916-1918,1921,1925	0402B104K160CT
	C	1923,1924,1927,1928	0402B102K500CT
	C	1926,1929,1930	0402B104K160CT
	C	1937-1940,2301,3504	0402B102K500CT
	C	1941-1944,2302,2307	0402B104K160CT
	C	2105-2107,2204,2205	0402B103K500CT
	C	2203 (1000 pF)	DCG1094
	C	2207,2717 (0.1 uF)	DCG1104
	C	2214,2216,2218,2220	0603N102J500CT
	C	2221,2305,2306,2503	0603B103K500CT
	C	2223,2236-2239,2703	0603B104K500CT
	C	2224-2227	0402N151J500CT
	C	2228-2235,2303,2304	0402N101J500CT
	C	2308,2310,2506,2508	0402N470J500CT
	C	2309,2311,2313,2315	0402B104K160CT
	C	2316,2321,2322,2329	0603X106K6R3CT
	C	2317,2318,2513,2514	1206N683J500CT
	C	2319,2320,2515,2516	0603N472J500CT
	C	2323,2324,2327,2328	0402B104K160CT
	C	2325,2326,2336,2338	0402B103K500CT
	C	2330,2333,2334,2510	0603X106K6R3CT
	C	2331,2335,2337	0402B104K160CT
	C	2332,2342,2720,2724	0402N102J500CT
	C	2339-2341,2505,2507	0402B104K160CT
	C	2501,2502,2722	0402N101J500CT
	C	2504	0603B103K500CT
	C	2509,2511,2519,2520	0402B104K160CT
	C	2512,2517,2518	0603X106K6R3CT
	C	2521,2522,2530,2532	0402B103K500CT
	C	2523,2524,2529,2531	0402B104K160CT
	C	2525-2528,2701,2709	0603X106K6R3CT
	C	2533,2534,2725,2802	0402B104K160CT
	C	2702,2714,2721,2824	0402B103K500CT
	C	2704,2708,2710,2713	0603B104K500CT
	C	2706	0603N472J500CT
	C	2707	1206N683J500CT
	C	2711,2712,2831,3101	0603X106K6R3CT
	C	2718,3304	0603B104K500CT
	C	2803,2805,2806,2808	0402B104K160CT
	C	2809,2815,2904,2905	0402B104K160CT
	C	2812,2816,2818,2836	0603X475K100CT
	C	2819-2823,2825-2828	0402X224K160CT
	C	2830,2832-2834	0402X224K160CT
	C	2837,2844	0603X475K100CT
	C	2839-2843	0402X224K160CT
	C	2901,2917,2918	0402B103K500CT
	C	2906,2909,2912,2915	0402X105K160CT

Mark	No.	Description	Part No.
	C	2910,2911,3109,3111	0402B104K160CT
	C	3103-3107,3110,3112	0402B103K500CT
	C	3108,3120,3121,3123	0603X106K6R3CT
	C	3113,3117,3135,3136	0402B103K500CT
	C	3114,3116,3119,3122	0402B104K160CT
	C	3118	CEVW101M16
	C	3124,3126,3128-3130	0402B104K160CT
	C	3125,3127	0402N9R0C500CT
	C	3131	0603X106K6R3CT
	C	3132,3133,3137-3140	0402B104K160CT
	C	3134	CEHVAW470M16
	C	3141,3142	0402B223K160CT
	C	3143 (1000 pF)	ACG1127
	C	3144,3302,3317,3624	0402B104K160CT
	C	3301	0603B105K160CT
	C	3303,3502,3617,3618	0805X106K250CT
	C	3305	0603N102J500CT
	C	3306,3309	1210B106K500CT
	C	3308	1206B475K500CT
	C	3310	1210B475K101CT
	C	3311,3318	0603B104K101CT
	C	3312,3314	CC1206KKX7R0BB105
	C	3313 (2 uF/50 V)	DCH1363
	C	3315	0603B103K101CT
	C	3316	0603B102K101CT
	C	3503,3505,3601,3602	0402B103K500CT
	C	3506,3603,3604	0402B102K500CT
	C	3605,3606,3613-3616	0402B103K500CT
	C	3607-3612,3625,3626	0402B102K500CT
	C	3619,3620	0805X105K500CT
	C	3621,3622	0805X106K250CT
	C	3623,3647-3650,3660	0402X105K160CT
	C	3627,3628,3637,3638	0402B103K500CT
	C	3629-3632,3639-3642	0402B102K500CT
	C	3633-3636,3643-3646	0402B104K160CT
	C	3651-3654,3667-3674	0402N101J500CT
	C	3655-3657,3661,3662	0402B104K160CT
	C	3658,3663	0402B102K500CT
	C	3659,3664	0402B103K500CT

SUB ASSY
Consists of
UCOM ASSY
LEDB ASSY
LCDB ASSY
USBP ASSY
CRFB ASSY
CFX1 ASSY
CFX2 ASSY
CFX3 ASSY
CFX4 ASSY

GOTVWACADAEAF

SEMICONDUCTORS

Mark	No.	Description	Part No.
⚠	IC	5951	MM3543BH
⚠	IC	5952	TPS2557DRB
⚠	IC	6002	NJM2831F05
	IC	6003-6005	74VHC541FT
	IC	6006	MIMXRT1021DAG5B@V
	IC	6007	DYW2307*
		*Part number of the initial firmware equipped	
	IC	6008	74VHC4051AFT
	IC	6401,6402	74VHC595FT
	IC	6403	74VHC164FT
	IC	8301,8303,8304,8306	DRV5055A1QDBZ
	IC	8302,8305	NJM12904V
	Q	5951	LSCR523UB
	Q	5952	RN1903S1
	Q	6001,6003,6411,6413	LTC024EEB
	Q	6002	LTA023JEB
	Q	6004-6025,6401-6410	2SC4154-11
	Q	6026	2SC4097
	Q	6412,6414,6416,6418	2SB1689
	Q	6415,6417,6419,6421	LTC024EEB
	Q	6420,6422,6430,6432	2SB1689
	Q	6423-6428	2SC4154-11
	Q	6429,6431,6433,6435	LTC024EEB
	Q	6434,6436,6438,6440	2SB1689
	Q	6437,6439	LTC024EEB
⚠	D	5951	UDZV5R1
	D	6002,6517,6522,6527	FC-1608SXK630D08
	D	6401,6403,6405,6407	FC-1608UGK-520D
	D	6402,6404,6406,6408	1SS355L@V
	D	6409,6411,6413,6415	FC-1608UGK-520D
	D	6410,6412,6414,6416	1SS355L@V
	D	6417,6419,6421,6423	FC-1608UGK-520D
	D	6418,6420,6422,6424	1SS355L@V
	D	6425,6427,6429,6431	FC-1608UGK-520D
	D	6426,6428,6430,6432	1SS355L@V
	D	6433,6435,6437,6439	FC-1608UGK-520D
	D	6434,6436,6438,6440	1SS355L@V
	D	6441,6443,6445,6447	FC-1608UGK-520D
	D	6442,6444,6446,6448	1SS355L@V
	D	6449,6451,6453,6455	FC-1608UGK-520D
	D	6450,6452,6454,6456	1SS355L@V
	D	6457,6459,6461,6463	FC-1608UGK-520D
	D	6458,6460,6462,6464	1SS355L@V
	D	6465,6467,6469,6471	FC-1608UGK-520D
	D	6466,6468,6470,6472	1SS355L@V
	D	6473,6475,6477,6479	FC-1608UGK-520D
	D	6474,6476,6478,6480	1SS355L@V
	D	6481,6483,6485,6487	FC-1608UGK-520D
	D	6482,6484,6486,6488	1SS355L@V
	D	6489,6491,6493,6495	FC-1608UGK-520D
	D	6490,6492,6494,6496	1SS355L@V
	D	6497,6499,6501,6503	FC-1608UGK-520D
	D	6498,6500,6502,6504	1SS355L@V
	D	6505,6507,6509,6511	FC-1608UGK-520D
	D	6506,6508,6510,6512	1SS355L@V
	D	6513,6515	FC-1608UGK-520D
	D	6514,6516	1SS355L@V
	D	6518-6521,6523-6526	FC-1608YXK585F08
	D	6528-6531,6533-6536	FC-1608YXK585F08
	D	6532,6537,6542,6543	FC-1608SXK630D08
	D	6538-6541,6544-6547	FC-1608YXK585F08
	D	6548	FC-1608SXK630D08

MISCELLANEOUS

	L	5951 CHOKE COIL (10 uH)	CTH1486
	L	6001 CHIP BEEDS FILTER	BTX1047

Mark	No.	Description	Part No.
	L	6003 POWER INDUCTOR	ATH7047
	L	6601 CHIP INDUCTOR(10U)	DTL1105
	KN	5951,5952 WRAPPING TERMINAL	CKF1089
	KN	6002,6605 WRAPPING TERMINAL	CKF1089
	X	6001 RESONATOR (24 MHz)	CSS1773
	CN	5951,6006,8301 CONNECTOR	HWW-SR0620-J1@V
	CN	5952 CONNECTOR	HWW-SR0520-J1@V
NSP	CN	6001 CONNECTOR	CKS3856
	CN	6002 FFC/FPC CONNECTOR	S100-SSA-31-T2@V
	CN	6003 30P CONNECTOR	VKN1322
	CN	6004,6005,6008,6009 CONNECTOR	HWW-SR0320-J1@V
	CN	6007 19P CONNECTOR	VKN1311
	CN	6010 23P CONNECTOR	VKN1315
	CN	6011 21P CONNECTOR	RKN1062
	CN	6012-6014 FFC/FPC CONNECTOR	CKS6543
NSP	CN	6401 CONNECTOR	CKS3860
	CN	6601 FFC/FPC CONNECTOR	CKS6543
	CN	6602 FFC/FPC CONNECTOR	DKN1677
	CN	6801,6851 FFC/FPC CONNECTOR	CKS6625
	CN	6901,6951 FFC/FPC CONNECTOR	CKS6625
	VA	8301-8305 VARISTORS	EZJZ1V270RM

RESISTORS

	R	5951,6168,6178,6180	RC0402JR-07100KL@V
	R	5952	RC0402DR-0733KL@V
	R	5954	RC0402DR-0712KL@V
	R	5955	RC0402DR-07100RL@V
	R	5956	RC0402DR-072K2L@V
	R	5957	RC0603JR-07220RL@V
	R	5958,6112,6164,6206	RC0402JR-0710KL@V
	R	5959	RC0402JR-072K7L@V
	R	5960	RC0402DR-071K2L@V
	R	5961	RC0402DR-0743KL@V
	R	5962,6002,6018-6033	RC0402JR-07100RL@V
	R	5963	RC0603JR-074K7L@V
	R	5964	RC0603JR-07330RL@V
	R	6004	RC0603JR-071KL@V
	R	6006-6009	RC0402JR-0710ML@V
	R	6010,6012,6014-6017	RC0402JR-0722RL@V
	R	6011,6013,6060	RC0402JR-070RL@V
	R	6050-6052,6054,6144	RC0402JR-07100RL@V
	R	6053	RC0402JR-07180RL@V
	R	6061,6265,6266	RC1206JR-070RL@V
	R	6066-6076,6079-6081	RC0402JR-070RL@V
	R	6077,6078,6082-6084	RC0402JR-0756RL@V
	R	6096-6098,6101,6102	RC0402JR-070RL@V
	R	6099,6100,6122	RC0402JR-0756RL@V
	R	6114,6179	RC0402JR-074K7L@V
	R	6115-6119,6121,6128	RC0402JR-070RL@V
	R	6124-6127,6129,6131	RC0402JR-0756RL@V
	R	6130,6133,6217-6221	RC0402JR-0722KL@V
	R	6132,6134-6138,6141	RC0402JR-0756RL@V
	R	6139,6140,6142,6143	RC0402JR-070RL@V
	R	6145,6182,6186,6411	RC0402JR-0722RL@V
	R	6146,6148,6149,6151	RC0402JR-07100RL@V
	R	6147,6150,6152-6154	RC0402JR-0756RL@V
	R	6155,6156,6158,6161	RC0402JR-070RL@V
	R	6157,6159,6162,6165	RC0402JR-07100RL@V
	R	6163,6166,6170,6184	RC0402JR-070RL@V
	R	6167,6169,6171,6174	RC0402JR-07100RL@V
	R	6173,6175,6181,6188	RC0402JR-0756RL@V
	R	6176,6177,6401-6410	RC0402JR-07100RL@V
	R	6183,6189,6193,6201	RC0603JR-070RL@V
	R	6187,6196,6197,6199	RC0402JR-070RL@V
	R	6190-6192,6194,6195	RC0402JR-0756RL@V
	R	6198,6200	RC0402JR-0756RL@V
	R	6204	RC0402JR-072M2L@V
	R	6205,6284,6285	RC0805JR-070RL@V
	R	6207-6216,6222-6235	RC0402JR-0720KL@V
	R	6236-6242,6412,6425	RC0402JR-0722KL@V
	R	6243-6247,6253-6257	RC0603JR-072K2L@V
	R	6248-6252,6258-6262	RC0603JR-0747KL@V
	R	6263	RC0402JR-071K8L@V
	R	6264,6603	RC0402JR-0710KL@V
	R	6274-6283	RC1206JR-070RL@V
	R	6286,6601,6604-6626	RC0402JR-070RL@V
	R	6413-6420,6422,6423	RC0402JR-07100RL@V
	R	6421,6424,6428	RC0402JR-0747KL@V
	R	6426,6427,6430,6431	RC0402JR-07100RL@V
	R	6429,6432,6433,6436	RC0402JR-0722KL@V
	R	6434,6435,6438,6439	RC0402JR-07100RL@V
	R	6437	RC0402JR-0722RL@V
	R	6440,6483,6485,6486	RC0402JR-0722KL@V
	R	6441,6442	RC0402JR-07100RL@V
	R	6443-6447,6501-6506	RC0402JR-073K3L@V
	R	6448-6452	RC0402JR-076K8L@V
	R	6453-6462,6507-6512	RC0402JR-0747KL@V
	R	6463,6465,6467,6469	RC0603JR-071K2L@V
	R	6471,6473,6475,6477	RC0603JR-071K2L@V
	R	6479,6481	RC0603JR-071K2L@V
	R	6484,6487,6490,6493	RC0603JR-0710KL@V
	R	6488,6489,6491,6492	RC0402JR-0722KL@V
	R	6494,6495,6497,6498	RC0402JR-0722KL@V
	R	6496,6499	RC0603JR-0710KL@V
	R	6500,6525,6527,6528	RC0402JR-0722KL@V
	R	6513,6514,6523,6524	RC0603JR-07150RL@V
	R	6515,6517,6519,6521	RC0603JR-07120RL@V
	R	6526,6529,6532,6535	RC0603JR-071K5L@V
	R	6530,6531,6533,6534	RC0402JR-0722KL@V
	R	6536,6537,6539,6540	RC0402JR-0722KL@V
	R	6538,6541	RC0603JR-071K5L@V
	R	6542	RC0402JR-0722KL@V
	R	6632,6633,8301,8308	RC0402JR-070RL@V
	R	8302,8310,8318,8326	RC0603JR-070RL@V
	R	8303,8311,8319,8327	RC0603DR-0751KL@V
	R	8306,8314,8322,8330	RC0603DR-0710KL@V
	R	8307,8315,8323,8331	RC0603DR-072K7L@V
	R	8309,8316,8317,8324	RC0402JR-070RL@V
	R	8325,8332	RC0402JR-070RL@V
	VR	6801,6851,6901,6951 ROTARY VR	DCS1151

CAPACITORS

	C	5951	0805X226M160CT
	C	5952,5956,6016-6018	0402B104K160CT
	C	5953	0603B153K500CT
	C	5957	0402N821J500CT
	C	5959,5967,5969	0402B102K500CT
	C	5961,5962	0805X106K100CT
	C	5963 (100 uF/16 V)	DCH1365

Mark	No.	Description	Part No.
	C	5964 (1000 uF/6.3 V)	DCH1362
	C	5965 (0.033 uF)	DCE1028
	C	5968,5970,6402,6407	0402B103K500CT
	C	5971,5972	0402B104K500CT
	C	6001,6049,6050,6060	0402N471J500CT
	C	6002,6006,6126,6801	0603B104K500CT
	C	6003,6027,6030,6033	0805X106K250CT
	C	6004,6008	0603N102J500CT
	C	6009	0603X225K250CT
	C	6019,6020 (220 uF/16 V)	CCH2090
	C	6021 (100 uF/25 V)	CCH2000
	C	6022,6023,6025,6054	0402N102J500CT
	C	6024,6026,6029,6032	0402B104K160CT
	C	6035,6040-6043	0402B104K160CT
	C	6039,6044,6069,6082	0603X475K100CT
	C	6045-6048,6056,6059	0402B104K160CT
	C	6053	0402N470J500CT
	C	6055,6057,6058,6061	0402N102J500CT
	C	6062,6064,6066,6068	0402N102J500CT
	C	6063,6065,6071,6075	0402N471J500CT
	C	6067,6073,6074,6080	0402B104K160CT
	C	6070,6072,6076,6078	0402N102J500CT
	C	6077,6094,6100,6102	0402N471J500CT
	C	6079,6136,6601,6611	0402N102J500CT
	C	6081,6083,6088	0402X224K160CT
	C	6084-6087,6093,6108	0603X475K100CT
	C	6090	0402X474K6R3CT
	C	6095,6101,6103,6113	0402B104K160CT
	C	6096,6106,6114	0805X226M100CT
	C	6097-6099,6104,6110	0402X224K160CT
	C	6105,6414	0805X106K250CT
	C	6107,6112,6127-6133	0402N471J500CT
	C	6109	0603X475K100CT
	C	6111,6117	0402N5R0C500CT
	C	6115	0402X224K160CT
	C	6118	0402X105K160CT
	C	6119	CEVW470M6R3
	C	6120	CEVW101M16
	C	6123-6125	0603N471J500CT
	C	6134	0603X106K6R3CT
	C	6135,6403,6408,6410	0402B104K160CT
	C	6139-6141	0402B222K500CT
	C	6401,6406,6604	0402N471J500CT
	C	6404,6405,6411	0603X474K250CT
	C	6413,6603	0402B103K500CT
	C	6417-6428,6430,6432	0402B104K160CT
	C	6433	0805B106K6R3CT
	C	6434,6602,6606	0402B104K160CT
	C	6851,6901,6951	0603B104K500CT
	C	8301-8306,8308	0402B104K160CT

PNL2 ASSY
Consists of
PNLU ASSY
MIOB ASSY
PSWB ASSY

NAAB
SEMICONDUCTORS

Mark	No.	Description	Part No.
	IC	7501	TC74HC4051AF
	IC	7601	NJM2903M
	Q	7601	RT1P431M
	D	7501,7503,7505,7507	LTL17KTBP5D@V
	D	7502,7504,7506,7508	1SS355L@V
	D	7509,7601	LTL17KRH5D-P
	D	7510,7511,7602,7604	1SS355L@V
	D	7603,7605	LTL17KTBP5D@V
	D	7606-7610	1SS355L@V

MISCELLANEOUS

	S	7501-7504,7601 ROTARY SWITCH	DSG1098
	S	7505,7602 TACT SWITCH	DSG1079
	S	7603 SLIDE SWITCH	DSH1066
	S	7651 PUSH SW	ASG1102
	CN	7501 13P CONNECTOR	VKN1244
	CN	7601 15P CONNECTOR	VKN1246
	CN	7651 CONNECTOR	HWW-R0320-J1@V

RESISTORS

	R	7501,7502,7504-7507	RC0603JR-07560RL@V
	R	7503,7521,7531,7542	RC0603JR-072K2L@V
	R	7508,7601	RC0603JR-07680RL@V
	R	7509,7523,7533,7543	RC0603JR-07220RL@V
	R	7510,7524,7534,7544	RC0603JR-07330RL@V
	R	7511,7525,7535,7545	RC0603JR-07390RL@V
	R	7512,7526,7536,7546	RC0603JR-07510RL@V
	R	7513,7527,7537,7547	RC0603JR-07750RL@V
	R	7514,7528,7538,7548	RC0603JR-071K1L@V
	R	7515,7529,7539,7549	RC0603JR-071K8L@V
	R	7516,7530,7540,7550	RC0603JR-073K6L@V
	R	7517,7518,7607,7608	RC0603JR-07560RL@V
	R	7519,7604	RC0603JR-07620RL@V
	R	7520,7522,7532,7541	RC0603JR-07220KL@V
	R	7602	RC0603JR-0722KL@V
	R	7603	RC0603JR-071KL@V
	R	7605	RC0603JR-071ML@V
	R	7606	RC0603JR-0710KL@V
	R	7609,7613	RC0603JR-07220KL@V
	R	7610,7611	RC0603JR-07430RL@V
	R	7612	RC0603JR-072K2L@V
	R	7614	RC0603JR-07220RL@V
	R	7615	RC0603JR-07330RL@V
	R	7616	RC0603JR-07390RL@V
	R	7617	RC0603JR-07510RL@V
	R	7618	RC0603JR-07750RL@V
	R	7619	RC0603JR-071K1L@V
	R	7620	RC0603JR-071K8L@V
	R	7621	RC0603JR-073K6L@V
	R	7651	RC0603JR-07100RL@V
	VR	7501-7504 ROTARY VR	DCS1104
	VR	7601 ROTARY VR	DCS1117
	VR	7602 ROTARY VR	DCS1078

CAPACITORS

	C	7501-7505,7507,7509	0603B104K500CT
	C	7506,7508,7510,7511	0603N471J500CT
	C	7512,7513,7518	0603B104K500CT
	C	7514-7517	0603N471J500CT
	C	7519-7521	0603N102J500CT
	C	7601-7607	0603B104K500CT
	C	7651	0603B103K500CT

Mark	No.	Description	Part No.
		PNL3 ASSY	
		Consists of	
		PNLL ASSY	
		PNLR ASSY	
		CHF1 ASSY	
		CHF2 ASSY	
		CHF3 ASSY	
		CHF4 ASSY	

P Q R S X Y

SEMICONDUCTORS

	Q	7701,7704,7706,7708	LTC124EUB
	Q	7702,7802,7803	2SC4154-11
	Q	7703,7705,7707,7709	2SB1689
	Q	7710,7801,7805,7807	LTC124EUB
	Q	7711,7804,7806,7808	2SB1689
	Q	7809,7811,7813,7815	LTC124EUB
	Q	7810,7812,7814,7816	2SB1689
	Q	7817	LTC124EUB
	Q	7818	2SB1689
	D	7701-7714,7716,7718	1SS355L@V
	D	7715,7717,7857,7859	LTL17KSL5D-P
	D	7719,7721,7723,7836	LTL17KTBP5D@V
	D	7720,7722,7724	1SS355L@V
	D	7801-7835,7837,7839	1SS355L@V
	D	7838,7840,7842,7844	LTL17KTBP5D@V
	D	7841,7843,7845,7847	1SS355L@V
	D	7846,7849,7851,7853	LTL17KTBP5D@V
	D	7848	LTL17KRH5D-P
	D	7850,7852,7854,7856	1SS355L@V
	D	7855,7861,7865,7867	LTL17KTBP5D@V
	D	7858,7860,7862,7864	1SS355L@V
	D	7863	LTL17KTGP4J-P@V
	D	7866,7868	1SS355L@V

MISCELLANEOUS

	S	7701,7702,7706,7707 TACT SWITCH	DSG1079
	S	7703-7705,7708 SLIDE SWITCH	DSH1058
	S	7801-7815,7819-7821 TACT SWITCH	DSG1079
	S	7816,7817 SLIDE SWITCH	DSH1058
	S	7818 SLIDE SWITCH	DSH1066
	S	7822 ROTARY ENCODER	DSX1137
	S	7823 TACT SWITCH	DSG1079
	S	7824 ROTARY ENCODER	DSX1136
	CN	7701 21P CONNECTOR	VKN1252
	CN	7802 31P CONNECTOR	VKN1262
	CN	8011,8021,8031,8041 CONNECTOR	HWW-L0320-J1@V

RESISTORS

	R	7701,7803	RC0603JR-07220KL@V
	R	7703,7806	RC0603JR-076K8L@V
	R	7705,7808,7809	RC0603JR-0747KL@V
	R	7706,7708,7711,7713	RC0603JR-0722KL@V
	R	7707,7712,7717,7722	RC0603JR-0727KL@V
	R	7709,7710,7714,7715	RC0603JR-07560RL@V
	R	7716,7718,7721,7723	RC0603JR-0722KL@V
	R	7719,7720,7724,7725	RC0603JR-07560RL@V
	R	7726,7728,7810,7812	RC0603JR-0722KL@V
	R	7727	RC0603JR-0727KL@V
	R	7729,7730	RC0603JR-07430RL@V
	R	7801,7802,8011,8021	RC0603JR-070RL@V
	R	7805	RC0603JR-073K3L@V
	R	7811,7818,7825,7832	RC0603JR-0715KL@V
	R	7813-7816,7820-7823	RC0603JR-07560RL@V
	R	7817,7819,7824,7826	RC0603JR-0722KL@V
	R	7827-7830,7835-7838	RC0603JR-07560RL@V
	R	7831,7834,7839,7841	RC0603JR-0722KL@V
	R	7833	RC0603JR-07270RL@V
	R	7840,7847,7854,7861	RC0603JR-0715KL@V
	R	7842-7845,7849-7852	RC0603JR-07560RL@V
	R	7846,7848,7853,7855	RC0603JR-0722KL@V
	R	7856,7858,7863-7866	RC0603JR-07560RL@V
	R	7857,7859	RC0603JR-07510RL@V
	R	7860,7862	RC0603JR-0722KL@V
	R	8031,8041	RC0603JR-070RL@V
	VR	7701,7703,7802 ROTARY VR	DCS1104
	VR	7702,7801,7803 ROTARY VR	DCS1078
	VR	8011,8021 VARIABLE RESISTOR	CCW1024
	VR	8031,8041 VARIABLE RESISTOR	CCW1024

CAPACITORS

	C	7701,7802	CEJQ470M16
	C	7702-7711,7801,7803	0603B104K500CT
	C	7804,7807-7818,8011	0603B104K500CT
	C	7805,7806	0603B103K500CT
	C	8012,8022,8032,8042	0603N471J500CT
	C	8021,8031,8041	0603B104K500CT

U
CDCB ASSY

SEMICONDUCTORS

	IC	6701	AD7147ACPZ500RL7
	IC	6702	TC7SH08FUS2
	D	6701-6705,6707	LTST-108TBL@V
	D	6706	UDZV3R6

MISCELLANEOUS

	L	6701 CHIP SOLID INDUCTOR	XTL3010
NSP	CN	6701 CONNECTOR	CKS3856

RESISTORS

	R	6701-6715,6729-6731	RC0402JR-073KL@V
	R	6716,6721	RC0402JR-072K2L@V
	R	6717	RC0402JR-0756RL@V
	R	6718,6719	RC0402JR-07220RL@V
	R	6720	RC0402JR-07100RL@V

CAPACITORS

	C	6707,6708,6710	0603B104K500CT
	C	6711	0603X106K6R3CT

Z
PNLC ASSY

SEMICONDUCTORS

	IC	7001-7003	TC74HC4051AF
	Q	7001-7004,7013-7016	2SC4154-11
	Q	7005,7007,7009,7011	LTC124EUB
	Q	7006,7008,7010,7012	2SB1689
	Q	7017,7019,7021	LTC124EUB

Mark	No.	Description	Part No.
Q	7018,7020,7022		2SB1689
D	7001,7010,7019,7020		LTL17KSL5D-P
D	7002,7004,7006,7017		LTL17KTBP5D@V
D	7003,7005,7007,7009		1SS355L@V
D	7008		LTL17KRH5D-P
D	7011,7013,7015,7021		LTW-1GHCW4-P(A)@V
D	7012,7014,7016,7018		1SS355L@V
D	7022,7024,7026,7028		1SS355L@V
D	7023,7025,7036		LTW-1GHCW4-P(A)@V
D	7027,7030,7032,7034		LTL17KTBP5D@V
D	7029,7038-7040,7043		LTL17KSL5D-P
D	7031,7033,7035,7037		1SS355L@V
D	7041,7045,7048		LTL17KTBP5D@V
D	7042,7046,7049		1SS355L@V
D	7044,7047,7050-7053		LTL17KSL5D-P
D	7054-7083		1SS355L@V

MISCELLANEOUS

S	7001,7007,7013	TACTILE SWITCH	DSG1153
S	7002-7006,7008	TACT SWITCH	DSG1079
S	7009	SLIDE SWITCH	DSH1066
S	7010-7012,7014-7020	TACT SWITCH	DSG1079
S	7021,7023	TACTILE SWITCH	DSG1153
S	7022,7024	TACT SWITCH	DSG1079
CN	7001	23P CONNECTOR	VKN1254
CN	7002,7003,7005	4P CONNECTOR	VKN1264
CN	7004	13P CONNECTOR	VKN1244
CN	7006	4P CONNECTOR	VKN1264
CN	7007	15P CONNECTOR	VKN1246
CN	7008	30P CONNECTOR	VKN1261

RESISTORS

R	7001		RC0603JR-07220KL@V
R	7002,7004,7006,7008		RC0603JR-0747KL@V
R	7003,7005,7007,7009		RC0603JR-076K8L@V
R	7010-7017,7074,7076		RC0603JR-0747KL@V
R	7018,7020,7033,7035		RC0603JR-0722KL@V
R	7019,7034,7047,7062		RC0603JR-073K3L@V
R	7022-7024,7027-7029		RC0603JR-07560RL@V
R	7025		RC0603JR-07680RL@V
R	7026,7031,7045,7054		RC0603JR-07330RL@V
R	7030		RC0603JR-07620RL@V
R	7036-7038,7041-7043		RC0603JR-07560RL@V
R	7039,7044,7053,7058		RC0603JR-07430RL@V
R	7046,7048,7061,7063		RC0603JR-0722KL@V
R	7050-7052,7055-7057		RC0603JR-07560RL@V
R	7059,7073,7091,7092		RC0603JR-07330RL@V
R	7064-7067,7069-7072		RC0603JR-07560RL@V
R	7075,7077,7079,7081		RC0603JR-076K8L@V
R	7078,7080,7082-7089		RC0603JR-0747KL@V
R	7094,7096,7101,7103		RC0603JR-0722KL@V
R	7095,7102,7111		RC0603JR-073K3L@V
R	7097,7099,7105,7107		RC0603JR-07430RL@V
R	7100,7106,7108,7116		RC0603JR-07330RL@V
R	7110,7112		RC0603JR-0722KL@V
R	7113,7115		RC0603JR-07430RL@V
R	7118,7119,7122		RC0603JR-07330RL@V
VR	7001-7016	ROTARY VR	DCS1078
VR	7017	ROTARY VR	DCS1117
VR	7018,7019	ROTARY VR	DCS1116

CAPACITORS

Mark	No.	Description	Part No.
C	7001,7004,7005		0603B104K500CT
C	7002,7003		CEJQ470M16
C	7006-7009,7015		0603N471J500CT
C	7010-7014,7022-7025		0603B104K500CT
C	7016-7018,7036-7038		0603N102J500CT
C	7019-7021,7026-7029		0603N471J500CT
C	7030-7034,7042-7045		0603B104K500CT
C	7035,7039-7041		0603N471J500CT
C	7046-7049,7051		0603N471J500CT
C	7050,7058-7067		0603B104K500CT
C	7052-7054		0603N102J500CT
C	7055-7057		0603N471J500CT

AG

SW POWER SUPPLY

There is no service parts.