2. EXPLODED VIEWS AND PARTS LIST

NOTES:
- *Parts marked by "NSP" are generally unavailable because they are not in our Master Spare Parts List.*
- *The ⚠ mark found on some component parts indicates the importance of the safety factor of the part. Therefore, when replacing, be sure to use parts of identical designation.*
- *Screws adjacent to ▼ mark on product are used for disassembly.*
- *For the applying amount of lubricants or glue, follow the instructions in this manual. (In the case of no amount instructions, apply as you think it appropriate.)*

2.1 PACKING

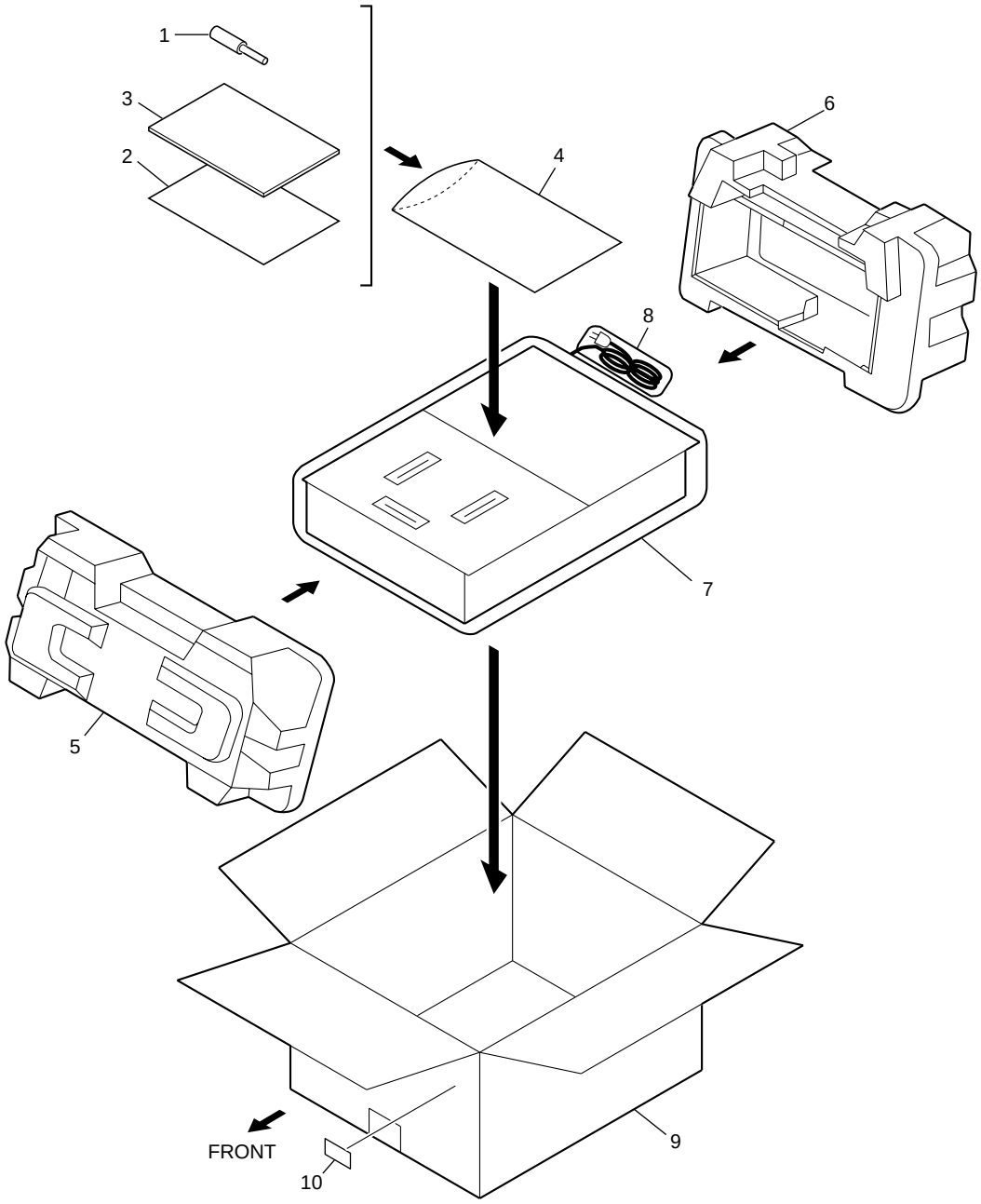

PACKING parts List

Mark	No.	Description	Part No.
	1	Hexagon Screwdriver	DEX1018
NSP	2	Warranty Card	See Contrast table(2)
	3	Operating Instructions	See Contrast table(2)
	4	Polyethylene Bag (0.03 x 230 x 340)	Z21-038
	5	Pad (A)	DHA1586
	6	Pad (B)	DHA1587
	7	Sheet	RHX1006
	8	Polyethylene Bag	VHL1051
	9	Packing Case	See Contrast table(2)
NSP	10	Label	VRW1629

(2) CONTRAST TABLE

DJM-909/ KUCXJ, DJM-909/ WYXJ and DJM-909/ TLTXJ are constructed the same except for the following :

Mark	No.	Symbol and Description	DJM-909 KUCXJ	DJM-909 WYXJ	DJM-909 TLTXJ
NSP	2	Warranty Card	ARY7043	Not used	Not used
	3	Operating Instructions (English)	DRB1349	Not used	Not used
	3	Operating Instructions (English/ French/ German/ Italian/ Duch/ Spanish)	Not used	DRB1350	Not used
	3	Operating Instructions (English/ Spanish/ Chinese)	Not used	Not used	DRB1351
	9	Packing Case	DHG2441	DHG2440	DHG2442

2.2 EXTERIOR SECTION

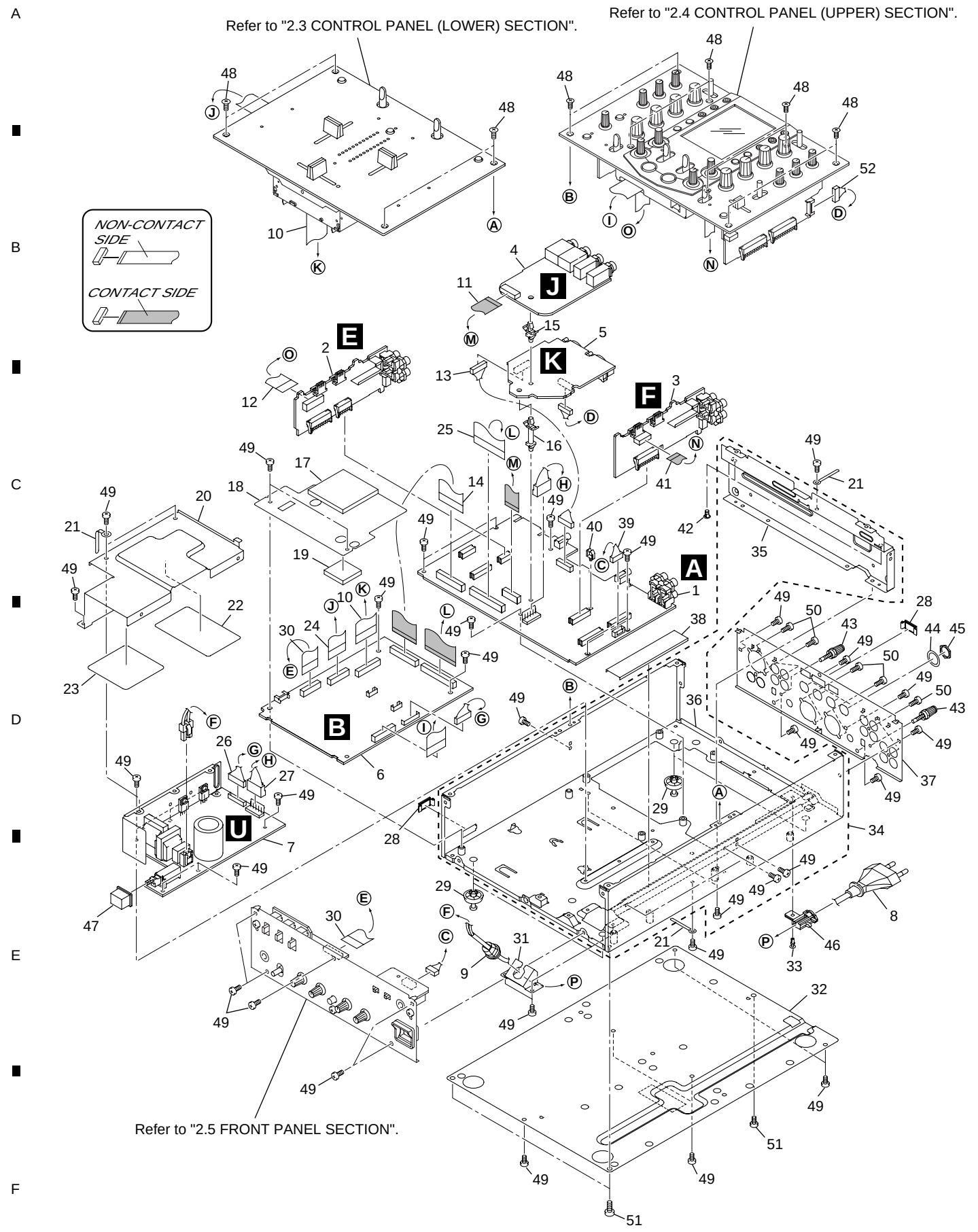

EXTERIOR SECTION Parts List

Mark	No.	Description	Part No.
	1	MAIN Assy	DWX2337
	2	C1BF Assy	DWS1328
	3	C2BF Assy	DWS1329
	4	SDRT Assy	DWX2321
	5	XLR Assy	DWX2322
	6	DSP Assy	DWX2316
⚠	7	SW POWER SUPPLY	DWR1377
⚠	8	AC Power Cord	See Contrast table(2)
⚠	9	Strain Relief	See Contrast table(2)
	10	Flexible Cable (23P)	DDD1239
	11	Flexible Cable (15P)	DDD1243
	12	Flexible Cable (17P)	DDD1234
	13	Connector Assy (9P)	DKP3662
	14	Flexible Cable (27P)	DDD1242
	15	Locking Card Spacer	PNW2917
NSP	16	PC Support	VEC1584
	17	Spacer B	DEC2622
	18	Shield Sheet G	DEC2610
	19	Spacer A	DEC2617
NSP	20	Shield Case	DNH2572
NSP	21	Cord Stopper	ZCB-069Z
	22	Shield Sheet B	DEC2570
	23	Shield Sheet C	DEC2584
	24	Flexible Cable (19P)	DDD1238
	25	Flexible Cable (35P)	DDD1241
	26	Connector Assy	PF08EE-D15
	27	Connector Assy	DKP3659
	28	Blind Cap	DNK4218
	29	Foot	REC-434
	30	Flexible Cable (17P)	DDD1246
	31	Cord Stopper Stay	DNH2576
NSP	32	Bottom Plate	DNH2570
	33	Rivet	RBM-003
NSP	34	Chassis (9) Assy	DXB1815
NSP	35	Partition Plate	DNH2573
NSP	36	Chassis (9)	DNA1296
NSP	37	Rear Panel	See Contrast table(2)
	38	Shield Sheet A	DEC2569
	39	Connector Assy (6P)	DKP3661
	40	Mini Clamp	DEC2588
	41	Flexible Cable (11P)	DDD1245
	42	Card Spacer	DNK2769
	43	Terminal Screw	AKE-031
	44	Washer	DBE1010
	45	Nut	NKX2FUC
	46	Cord Cover	DNK4197
	47	Power Knob	DAC2133
	48	Screw	CMZ30P100FZK
	49	Screw	BBZ30P060FZK
	50	Screw	BPZ30P080FMC
	51	Screw	BBZ40P120FMC
	52	Connector Assy (8P)	DKP3660

(2) CONTRAST TABLE

DJM-909/ KUCXJ, DJM-909/ WYXJ and DJM-909/ TLTXJ are constructed the same except for the following :

Mark	No.	Symbol and Description	DJM-909 KUCXJ	DJM-909 WYXJ	DJM-909 TLTXJ
⚠	8	AC Power Cord	VDG1075	VDG1077	VDG1077
⚠	9	Strain Relief	CM-22C	CM-22B	CM-22B
NSP	37	Rear Panel	DNC1656	DNC1655	DNC1657

2.3 CONTROL PANEL (LOWER) SECTION

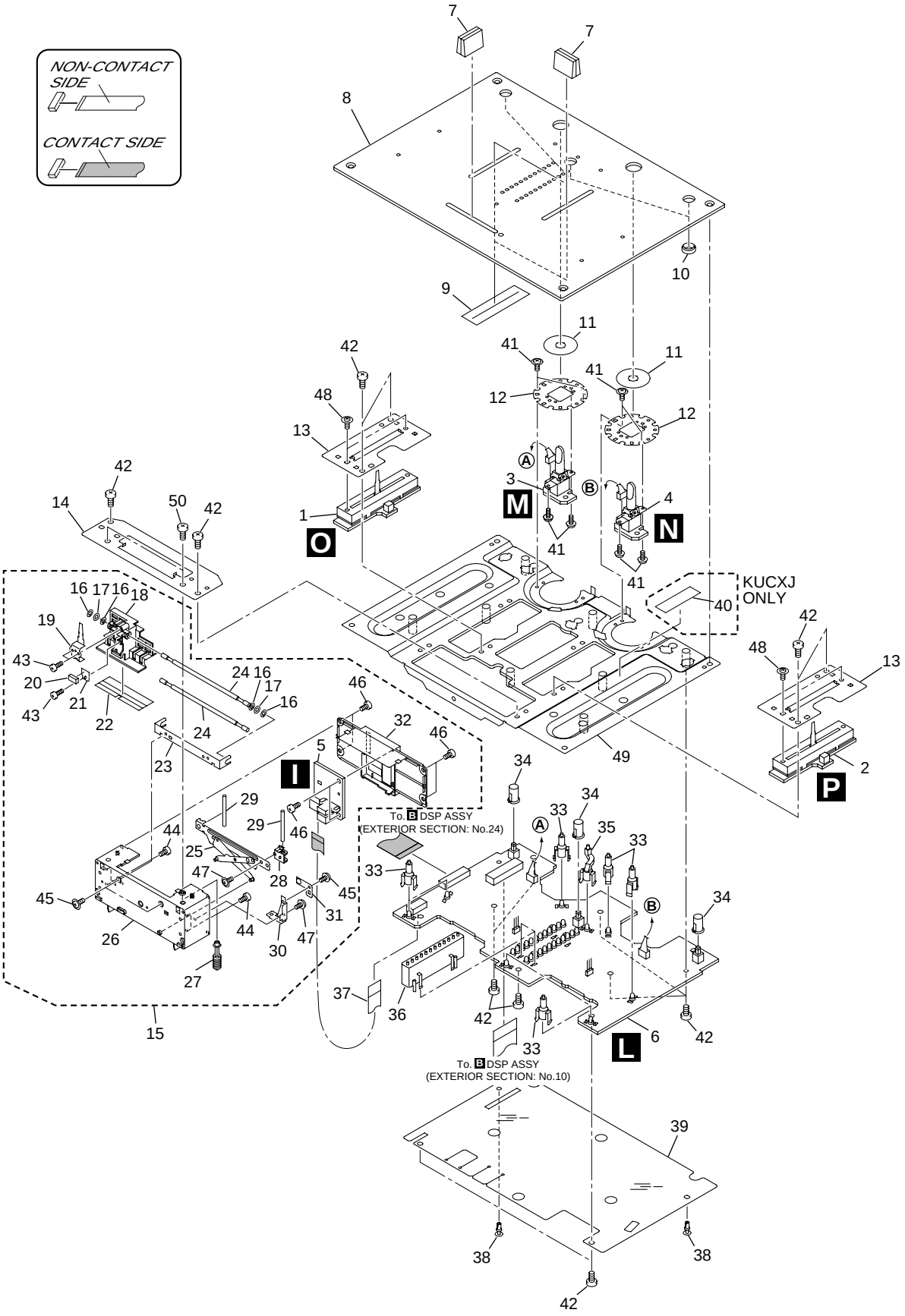

CONTROL PANEL (LOWER) SECTION Parts List

Mark	No.	Description	Part No.
	1	FVA1 Assy	DWX2323
	2	FVA2 Assy	DWX2324
	3	C1TR Assy	DWS1334
	4	C2TR Assy	DWS1335
	5	FDVR Assy	DWX2320
	6	LVMR Assy	DWS1330
	7	Slider Knob (L)	DNK4210
	8	Control Panel (D9)	DNB1121
	9	Fader Packing (A)	DEC2571
	10	Push SW Guide	DNK4208
	11	SW Packing (A)	DEC2573
	12	Transform Panel	DNF1682
	13	CH Fader Bracket	DNF1683
	14	CR Fader Bracket	DNF1684
	15	Cross Fader Assy-S	DXX2535
	16	Washer	WT28D060D025
	17	O Ring (2.8)	DEB1618
	18	Slider Base	DNK4192
	19	Lever Plate	DNH2564
	20	Fader Magnet	DMG1010
	21	Yoke	DNH2569
	22	Encoder Plate S	DEC2568
	23	Stopper S	DNH2578
	24	Guide Shaft	DLA1966
	25	MG Plate Assy	DXA1968
	26	Case A	DNK4193
	27	Worm gear S	DNK4195
	28	Rack gear S	DNK4196
	29	MG Shaft	DLA1947
	30	WG Holder	DNF1681
	31	WG Spring	DBK1245
	32	Case B	DNK4194
	33	LED Lens (C)	DNK4217
	34	Push SW Knob (B)	DNK4207
	35	LED Lens (B)	DNK4216
	36	Level Meter Holder	DNK4214
	37	Flexible Cable (9P)	DDD1240
	38	Rivet	RBM-003
	39	Shield Sheet (F)	DEC2591
	40	65 Label (S)	See Contrast table(2)
	41	Screw	AMZ26P040FMC
	42	Screw	BBZ30P060FZK
	43	Screw	BPZ20P060FMC
	44	Screw	CPZ26P100FZK
	45	Screw	AMZ20P040FMC
	46	Screw	BPZ20P050FMC
	47	Screw	PBA1062
	48	Thin Head Screw	DBA1198
NSP	49	Panel Stay (D) Assy	DXB1787
	50	Screw	BPZ30P080FMC

(2) CONTRAST TABLE

DJM-909/ KUCXJ, DJM-909/ WYXJ and DJM-909/ TLTXJ are constructed the same except for the following :

Mark	No.	Symbol and Description	DJM-909 KUCXJ	DJM-909 WYXJ	DJM-909 TLTXJ
	40	65 Label (S)	DRW2164	Not used	Not used

2.4 CONTROL PANEL (UPPER) SECTION

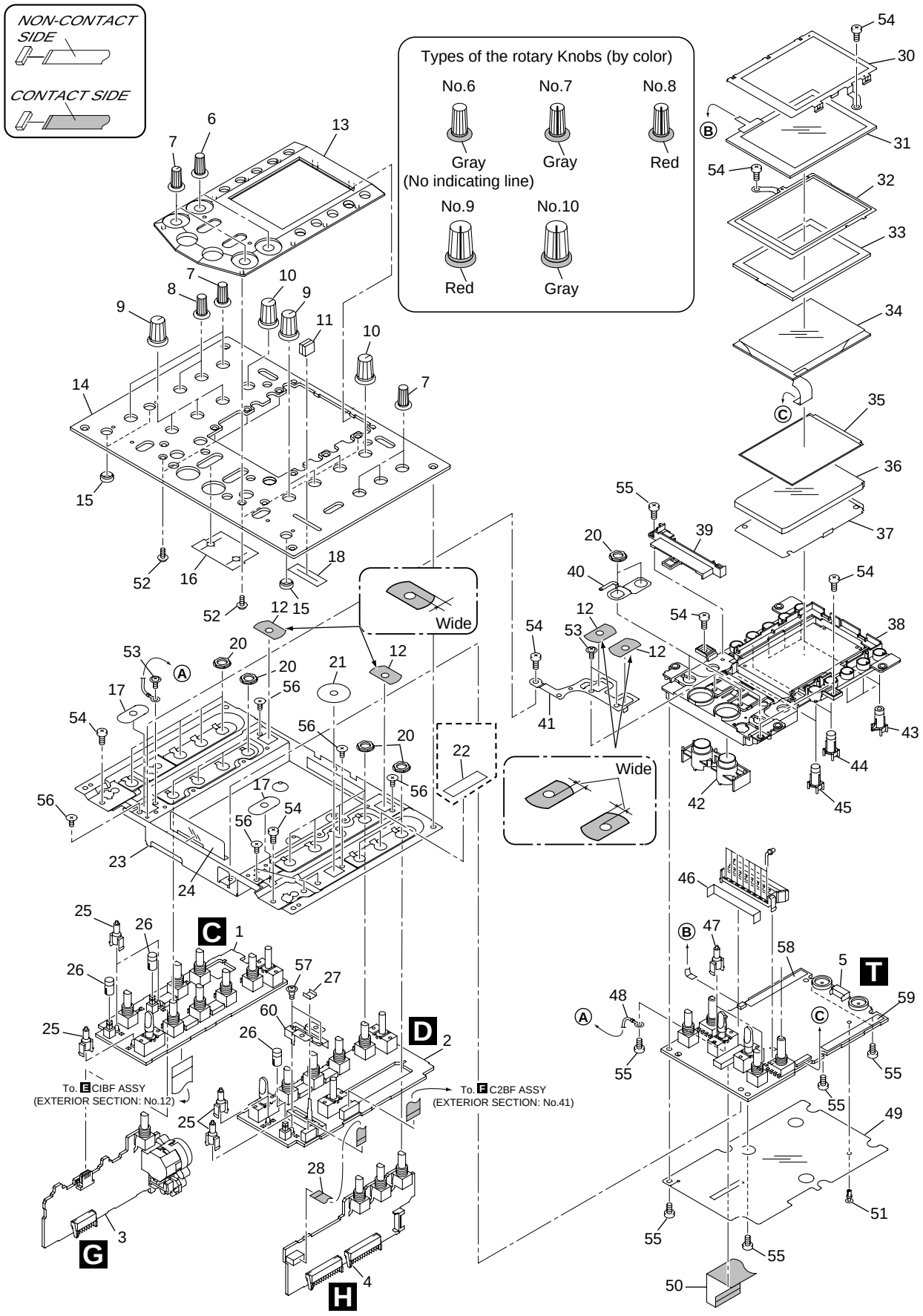

CONTROL PANEL (UPPER) SECTION Parts List

Mark	No.	Description	Part No.
	1	C1EQ Assy	DWS1326
	2	C2EQ Assy	DWS1327
	3	MICB Assy	DWX2318
	4	HPBO Assy	DWX2319
	5	LCD Assy	DWX2317
	6	Rotary Knob (Small: Gray)	DNK4205
	7	Rotary Knob (Small: Gray)	DNK4203
	8	Rotary Knob (Small: Red)	DNK4204
	9	Rotary Knob (Large: Red)	DNK4202
	10	Rotary Knob (Large: Glay)	DNK4201
	11	Slider Knob (S)	DNK4211
	12	SW Packing (D)	DEC2580
	13	Escutcheon	DNK4222
	14	Control Panel (U9)	DNB1120
	15	Push SW Guide	DNK4208
	16	SW Packing (C)	DEC2621
	17	SW Packing (B)	DEC2574
	18	Fader Packing (B)	DEC2572
	19	• • • • •	
	20	Flange Nut	DBN1004
	21	SW Packing (A)	DEC2573
	22	65 Label (S)	See Contrast table(2)
NSP	23	Panel Stay (U9)	DND1250
	24	Shield Sheet E	DEC2581
	25	LED Lens (A)	DNK4215
	26	Push SW Knob (A)	DNK4206
	27	Cue Earth Plate	DBK1252
	28	Flexible Cable (7P)	DDD1244
	29	• • • • •	
	30	Earth Plate	DNH2577

Mark	No.	Description	Part No.
	31	Touch Panel	DSX1062
	32	Bracket	DNH2574
	33	Gasket	DEC2632
	34	LCD Module	DAV1002
	35	Diffusion Sheet	DEC2619
	36	Lighting Conductor	DNK4200
	37	Reflection Sheet	DEC2620
	38	LCD Holder	DNK4199
	39	LCD Holder (M)	DNK4225
	40	Earth Spring	DBK1248
	41	Earth Bracket	DNH2575
	42	Tap Knob	DNK4209
	43	Preset Knob	DNK4306
	44	Tact Knob (E)	DNK4265
	45	Tact Knob	DNK4213
	46	Shade Sheet	DEC2631
	47	LED Lens (C)	DNK4217
	48	Earth Lug Assy	DDX1191
	49	Shield Sheet D	DEC2579
	50	Flexible Cable (21P)	DDD1237
	51	Rivet	RBM-003
	52	Screw	PBA1062
	53	Screw	AMZ26P040FMC
	54	Screw	BBZ30P060FZK
	55	Screw	BPZ30P080FMC
	56	Screw	CMZ26P050FZK
	57	Screw	DBA1141
	58	Knob Cushion L	DEC2656
	59	Knob Cushion R	DEC2657
	60	Cue Fader Bracket	DNF1690

(2) CONTRAST TABLE

DJM-909/ KUCXJ, DJM-909/ WYXJ and DJM-909/ TLTXJ are constructed the same except for the following :

Mark	No.	Symbol and Description	DJM-909 KUCXJ	DJM-909 WYXJ	DJM-909 TLTXJ
	22	65 Label (S)	DRW2164	Not used	Not used

2.5 FRONT PANEL SECTION

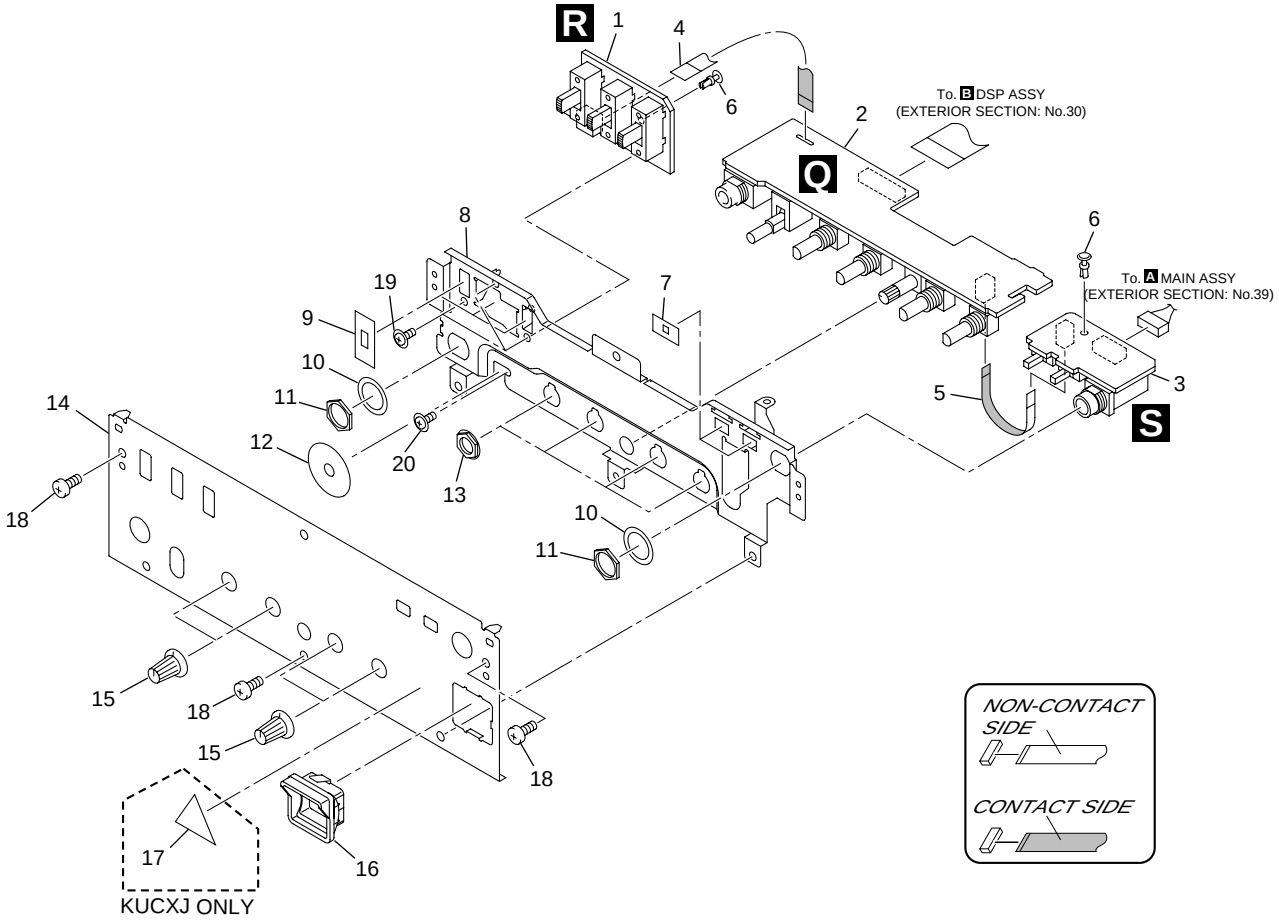

FRONT PANEL SECTION Parts List

Mark	No.	Description	Part No.
	1	RVSW Assy	DWS1332
	2	CFVR Assy	DWS1331
	3	FSSW Assy	DWS1333
	4	Flexible Cable (6P)	DDD1235
	5	Flexible Cable (3P)	DDD1236
	6	Rivet	RBM-003
	7	Slide Packing (B)	DEC2590
NSP	8	Front Panel Stay	DNH2571
	9	Slide SW Packing (A)	DEC2589
	10	Washer	DBE1010
	11	Nut	NKX2FUC
	12	SW Packing (A)	DEC2573
	13	Flange Nut	DBN1004
	14	Front Panel (9)	DNB1119
	15	Rotary Knob (SS)	DAA1162
	16	Power Knob Guide	DNK4198
NSP	17	Caution Label	See Contrast table(2)
	18	Screw	BBZ30P060FZK
	19	Screw	AMZ26P040FMC
	20	Screw	PMA30P060FMC

(2) CONTRAST TABLE

DJM-909/ KUCXJ, DJM-909/ WYXJ and DJM-909/ TLTXJ are constructed the same except for the following :

Mark	No.	Symbol and Description	DJM-909 KUCXJ	DJM-909 WYXJ	DJM-909 TLTXJ
NSP	17	Caution Label	DRW1975	Not used	Not used