9. EXPLODED VIEWS AND PARTS LIST

NOTES: ● *Parts marked by "NSP" are generally unavailable because they are not in our Master Spare Parts List.*
● *The ⚠ mark found on some component parts indicates the importance of the safety factor of the part. Therefore, when replacing, be sure to use parts of identical designation.*
● *Screws adjacent to ▼ mark on product are used for disassembly.*
● *For the applying amount of lubricants or glue, follow the instructions in this manual. (In the case of no amount instructions, apply as you think it appropriate.)*
● *Nos. indicate the pages and Nos. in the service manual for the base model.*

9.1 PACKING SECTION

DJM-900NXS/SYXJ8, DJM-900SRT/LSYXJ8, DJM-900SRT/UXJCB and DJM-900SRT/XJCN5 are constructed the same except for the following:

Mark	No.	Symbol and Description	DJM-900NXS /SYXJ8	DJM-900SRT /LSYXJ8	DJM-900SRT /UXJCB	DJM-900SRT /XJCN5	Remarks
		PACKING SECTION					
⚠	P89-1	Power Cord	ADG7062	ADG7062	DDG1108	ADG7105	
	P89-3	CD-ROM	DXX2694	DXX2757	DXX2757	DXX2757	Installation Disc
NSP		CD-ROM	Not used	DXX2734	DXX2734	DXX2734	Serato DJ CONTROL CD
	P89-4	Operating Instructions (En/Fr/De/It/Nl/Es/Ru)	DRB1569	Not used	Not used	Not used	
	P89-4	Operating Instructions (En/Fr/De/It/Nl/Es/Ru)	Not used	DRB1701	Not used	Not used	
	P89-5	Operating Instructions (En)	Not used	Not used	DRB1702	Not used	
	P89-8	Operating Instructions (Zhcn)	Not used	Not used	Not used	DRB1703	
NSP	P89-9	Warranty Card	ARY7158	ARY7158	Not used	Not used	
NSP	P89-10	Flier	DRH1108	Not used	Not used	Not used	
	P89-13	Pad A	DHA1854	Not used	Not used	Not used	
	P89-13	Pad/F	Not used	DHA1896	DHA1896	DHA1896	
	P89-14	Pad B	DHA1855	Not used	Not used	Not used	
	P89-14	Pad/R	Not used	DHA1897	DHA1897	DHA1897	
	P89-16	Packing Case	DHG3077	DHG3291	DHG3292	DHG3294	
NSP		Leaflet/FPC	Not used	DRM1377	Not used	DRM1377	
NSP		Leaflet/FIR	Not used	DRM1378	DRM1378	DRM1378	
NSP		Leaflet/QSG	Not used	DRM1380	DRM1380	DRM1380	
NSP		Leaflet/ERT	Not used	DRM1384	DRM1384	DRM1384	
		Packing Board	Not used	DHB1002	DHB1002	DHB1002	
NSP		Poly Bag	Not used	AHG7082	AHG7082	AHG7082	
NSP		Record Assy/DVS	Not used	DXX2733	DXX2733	DXX2733	Serato DJ CONTROL VINYL
NSP		Leaflet/SUF	DRH1204	Not used	Not used	Not used	
NSP		Leaflet/TEN	DRY1262	Not used	Not used	Not used	
NSP		Leaflet/TFR	DRY1263	Not used	Not used	Not used	
		Label	Not used	Not used	DRW2594	Not used	

9.2 EXTERIOR SECION

DJM-900NXS/SYXJ8, DJM-900SRT/LSYXJ8, DJM-900SRT/UXJCB and DJM-900SRT/XJCN5 are constructed the same except for the following:

Mark	No.	Symbol and Description	DJM-900NXS /SYXJ8	DJM-900SRT /LSYXJ8	DJM-900SRT /UXJCB	DJM-900SRT /XJCN5	Remarks
		EXTERIOR SECION					
	P91-1	INPUT Assy	DWX3193	DWX3504	DWX3504	DWX3504	
	P91-3	TRM1 Assy	DWX3203	DWX3506	DWX3506	DWX3506	
	P91-4	TRM2 Assy	DWX3204	DWX3507	DWX3507	DWX3507	
	P91-5	TRM3 Assy	DWX3205	DWX3508	DWX3508	DWX3508	
	P91-6	TRM4 Assy	DWX3206	DWX3509	DWX3509	DWX3509	
	P91-9	Short Pin Plug	AKM7008	Not used	Not used	Not used	
	P91-9	Plug/PIN	Not used	DKM1024	DKM1024	DKM1024	
	P91-17	Extension Shaft A	DNK5365	Not used	Not used	Not used	
	P91-23	Front Panel	DNK5845	Not used	Not used	Not used	
	P91-23	Panel/FR	Not used	DNK6260	DNK6260	DNK6260	
	P91-26	Rotary SW Knob S (B)	DAA1178	Not used	Not used	Not used	
	P91-26	KNOB/RSW	Not used	DAA1308	DAA1308	DAA1308	
	P91-27	Rotary SW Knob S (C)	DAA1204	Not used	Not used	Not used	
	P91-27	Knob/CH	Not used	DAA1321	DAA1321	DAA1321	
NSP	P91-29	Label	Not used	Not used	DRW1975	Not used	
NSP	P91-30	Name Label	DRW2463	DAL1270	DAL1263	DAL1265	
NSP		Caution Label (L)	Not used	DRW2430	Not used	Not used	
NSP		Name Label/Ru	DRW2486	Not used	Not used	Not used	
NSP		Label/FCC	Not used	Not used	DRW2595	Not used	

EXTERIOR SECION

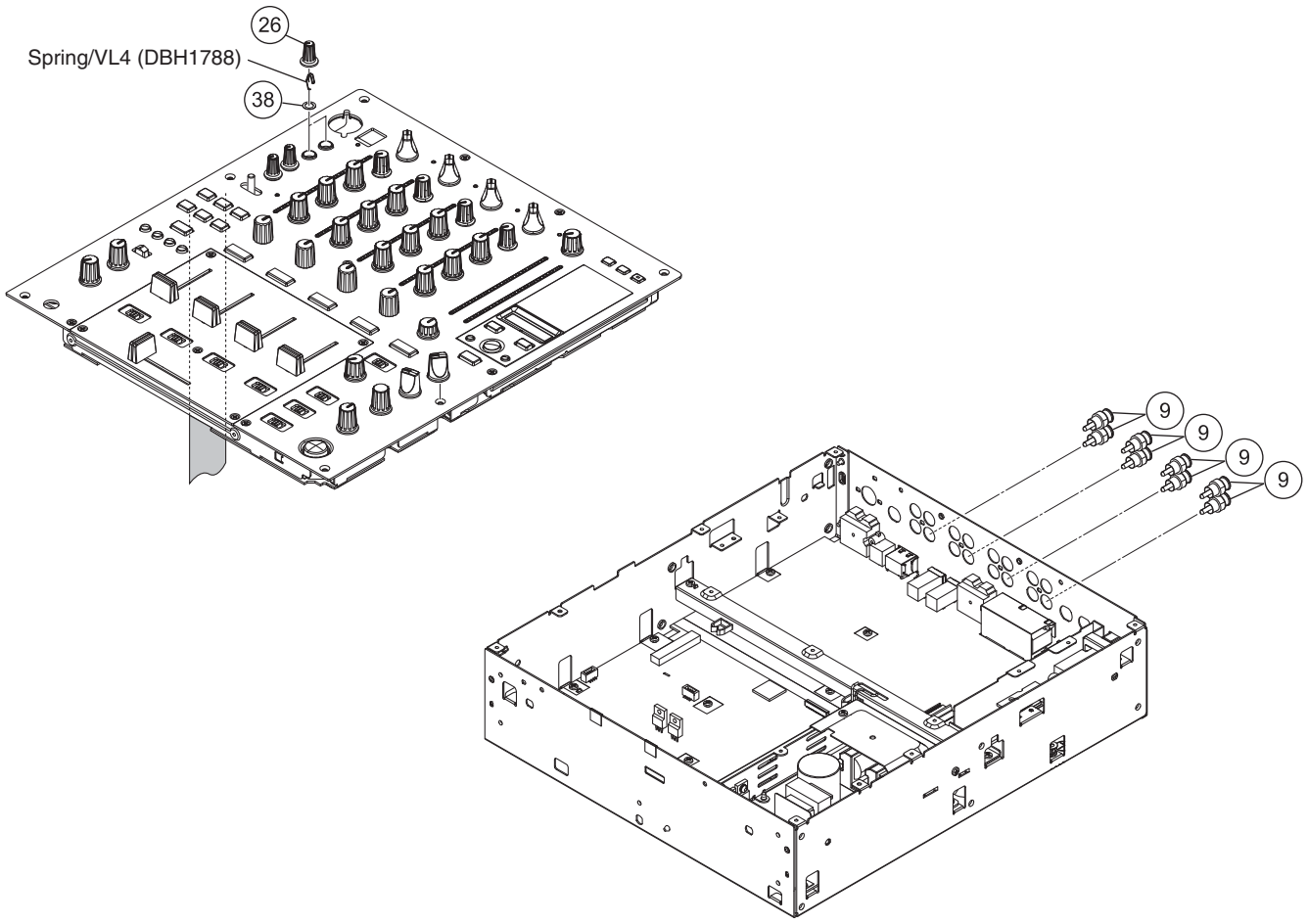

9.3 BOTTOM SECTION

DJM-900NXS/SYXJ8, DJM-900SRT/LSYXJ8, DJM-900SRT/UXJCB and DJM-900SRT/XJCN5 are constructed the same except for the following:

Mark	No.	Symbol and Description	DJM-900NXS /SYXJ8	DJM-900SRT /LSYXJ8	DJM-900SRT /UXJCB	DJM-900SRT /XJCN5	Remarks
		BOTTOM SECTION					
	P93-1	MAIN Assy	DWX3190	DWX3502	DWX3502	DWX3502	
	P93-2	SEND Assy	DWX3195	DWX3505	DWX3505	DWX3505	
⚠	P93-5	AC Inlet Assy (2P)	DKP3762	DKP3762	Not used	DKP3762	
⚠	P93-5	AC Inlet Assy (3P)	Not used	Not used	DKP3927	Not used	
	P93-9	Rear Panel	DNC2020	DNC2107	DNC2107	DNC2108	
	P93-34	Screw	Not used	Not used	PMH40P080FTC	Not used	

BOTTOM SECTION

*Caution : About No.17 Silicon Rubber D5 L DEB1456

During MAIN Assy disassembly, if the silicone sheet is found to be deformed, replace it with a new one.

Looking at the bottom panel of the Looking at the bottom panel of the chassis from the outside, check that the hole is covered by a silicon sheet and that the MAIN Assy is not seen through the hole.

9.4 CONTROL PANEL SECTION (1/2)

DJM-900NXS/SYXJ8, DJM-900SRT/LSYXJ8, DJM-900SRT/UXJCB and DJM-900SRT/XJCN5 are constructed the same except for the following:

Mark	No.	Symbol and Description	DJM-900NXS /SYXJ8	DJM-900SRT /LSYXJ8	DJM-900SRT /UXJCB	DJM-900SRT /XJCN5	Remarks
		CONTROL PANEL SECTION (1/2)					
	P95-6	FADC Assy	DWX3202	Not used	Not used	Not used	
NSP	P95-6	CRFD ASSY	Not used	DWX3258	DWX3258	DWX3258	
	P95-13	CRF Stay	DNF1870	Not used	Not used	Not used	
	P95-13	Stay/CRF	Not used	DNF1927	DNF1927	DNF1927	
	P95-15	Bush	DNK5974	Not used	Not used	Not used	
	P93-26	Rotary SW Knob (B)	DAA1176	Not used	Not used	Not used	
	P93-26	Knob/RSW	Not used	DAA1305	DAA1305	DAA1305	
	P93-27	Rotary SW Knob S (A)	DAA1177	Not used	Not used	Not used	
	P93-27	Knob/RSW	Not used	DAA1307	DAA1307	DAA1307	
	P95-33	Rotary SW Knob (HM)	DAA1256	Not used	Not used	Not used	
	P95-33	Knob/CL	Not used	DAA1320	DAA1320	DAA1320	
	P95-36	Button (CUE)	DAC2503	Not used	Not used	Not used	
	P95-36	Button/CUE	Not used	DAC2882	DAC2882	DAC2882	
	P95-37	Slider Knob 1	DAC2684	Not used	Not used	Not used	
	P95-37	Knob/SLD	Not used	DAC2935	DAC2935	DAC2935	
	P95-40	Fader Panel	DAH2830	Not used	Not used	Not used	
	P95-40	Panel/FD	Not used	DAH2971	DAH2971	DAH2971	
	P95-42	Control Panel	DNB1186	DNB1233	DNB1233	DNB1233	
	P95-44	CDC Panel	DNK5846	Not used	Not used	Not used	
	P95-44	Panel/CDC	Not used	DNK6258	DNK6258	DNK6258	
	P95-57	Screw	IMZ30P040FTC	BPZ30P080FTB	BPZ30P080FTB	BPZ30P080FTB	
	P95-61	Cross Fader Assy	Not used	DXA2257	DXA2257	DXA2257	

CONTROL PANEL SECTION (1/2)

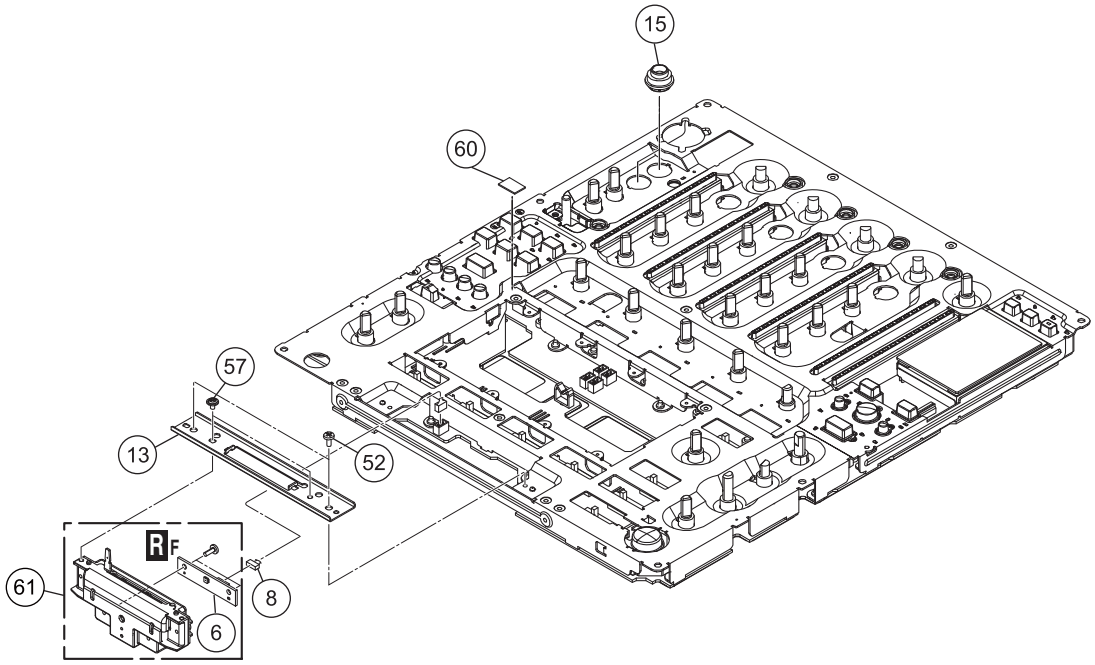

9.5 CONTROL PANEL SECTION (2/2)

DJM-900NXS/SYXJ8, DJM-900SRT/LSYXJ8, DJM-900SRT/UXJCB and DJM-900SRT/XJCN5 are constructed the same except for the following:

Mark	No.	Symbol and Description	DJM-900NXS /SYXJ8	DJM-900SRT /LSYXJ8	DJM-900SRT /UXJCB	DJM-900SRT /XJCN5	Remarks
		CONTROL PANEL SECTION (2/2)					
	P97-1	PNLA ASSY	DWX3196	DWX3503	DWX3503	DWX3503	
	P97-2	PNLB Assy	DWX3197	DWX3510	DWX3510	DWX3510	
	P97-7	Barrier	DEC3382	DEC3512	DEC3512	DEC3512	
	P97-11	Button (TAP)	DAC2653	Not used	Not used	Not used	
	P97-11	Button/TAP	Not used	DAC2931	DAC2931	DAC2931	
	P97-12	Button (LINK)	DAC2654	Not used	Not used	Not used	
	P97-12	Button/FDS	Not used	DAC2932	DAC2932	DAC2932	