9. EXPLODED VIEWS AND PARTS LIST

NOTES:
- *Parts marked by "NSP" are generally unavailable because they are not in our Master Spare Parts List.*
- *The ⚠ mark found on some component parts indicates the importance of the safety factor of the part. Therefore, when replacing, be sure to use parts of identical designation.*
- *Screws adjacent to ▼ mark on product are used for disassembly.*
- *For the applying amount of lubricants or glue, follow the instructions in this manual. (In the case of no amount instructions, apply as you think it appropriate.)*

9.1 PACKING SECTION

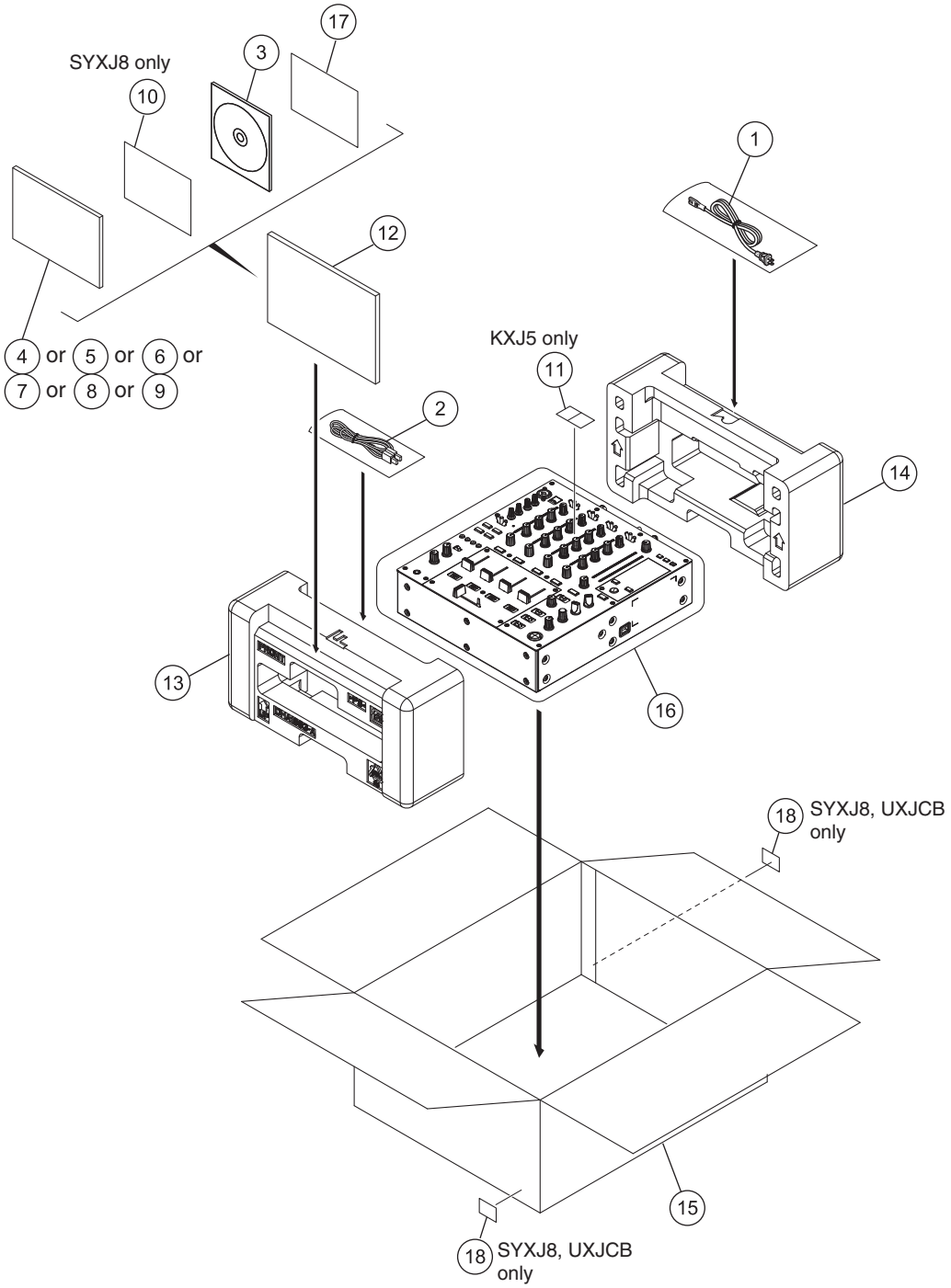

(1) PACKING SECTION PARTS LIST

Mark	No.	Description	Part No.
⚠	1	AC Power Cord	See Contrast table (2)
	2	USB Cable	DDE1128
	3	Driver Software CD-ROM	DXX2694
	4	Operating Instructions	See Contrast table (2)
	5	Operating Instructions	See Contrast table (2)
	6	Operating Instructions	See Contrast table (2)
	7	Operating Instructions	See Contrast table (2)
	8	Operating Instructions	See Contrast table (2)
	9	Operating Instructions	See Contrast table (2)
NSP	10	Warranty Card (WY)	See Contrast table (2)
NSP	11	Label RCY	See Contrast table (2)
NSP	12	Polyethylene Bag	AHG7117
	13	Packing Pad/A	DHA1883
	14	Packing Pad/B	DHA1884
	15	Packing Case	See Contrast table (2)
	16	Packing Sheet	RHC1023
NSP	17	Leaflet/NI	DRM1367
	18	Label/NI	See Contrast table (2)

(2) CONTRAST TABLE

DJM-850-K/SYXJ8, UXJCB, LXJ, KXJ5, XJCN5, DJM-850-S/SYXJ8, UXJCB, LXJ, KXJ5 and XJCN5 are constructed the same except for the following:

Mark	No.	Symbol and Description	DJM-850-K /SYXJ8	DJM-850-K /UXJCB	DJM-850-K /LXJ	DJM-850-K /KXJ5	DJM-850-K /XJCN5
⚠	1	AC Power Cord	ADG7062	DDG1108	ADG7062	ADG7115	ADG7105
	4	Operating Instructions (En, Fr, De, It)	DRB1604	Not used	Not used	Not used	Not used
	5	Operating Instructions (Nl, Es, Ru)	DRB1605	Not used	Not used	Not used	Not used
	6	Operating Instructions (En)	Not used	DRB1606	Not used	Not used	Not used
	7	Operating Instructions (En, Es, Zhtw)	Not used	Not used	DRB1607	Not used	Not used
	8	Operating Instructions (Ko)	Not used	Not used	Not used	DRB1608	Not used
	9	Operating Instructions (En, Zhcn)	Not used	Not used	Not used	Not used	DRB1609
NSP	10	Warranty Card (WY)	ARY7107	Not used	Not used	Not used	Not used
NSP	11	Label RCY	Not used	Not used	Not used	DRW2487	Not used
	15	Packing Case	DHG3093	DHG3094	DHG3095	DHG3098	DHG3097
	18	Label/NI	DRW2543	DRW2543	Not used	Not used	Not used

Mark	No.	Symbol and Description	DJM-850-S /SYXJ8	DJM-850-S /UXJCB	DJM-850-S /LXJ	DJM-850-S /KXJ5	DJM-850-S /XJCN5
⚠	1	AC Power Cord	ADG7062	DDG1108	ADG7062	ADG7115	ADG7105
	4	Operating Instructions (En, Fr, De, It)	DRB1604	Not used	Not used	Not used	Not used
	5	Operating Instructions (Nl, Es, Ru)	DRB1605	Not used	Not used	Not used	Not used
	6	Operating Instructions (En)	Not used	DRB1606	Not used	Not used	Not used
	7	Operating Instructions (En, Es, Zhtw)	Not used	Not used	DRB1607	Not used	Not used
	8	Operating Instructions (Ko)	Not used	Not used	Not used	DRB1608	Not used
	9	Operating Instructions (En, Zhcn)	Not used	Not used	Not used	Not used	DRB1609
NSP	10	Warranty Card (WY)	ARY7107	Not used	Not used	Not used	Not used
NSP	11	Label RCY	Not used	Not used	Not used	DRW2487	Not used
	15	Packing Case	DHG3105	DHG3106	DHG3107	DHG3110	DHG3109
	18	Label/NI	DRW2543	DRW2543	Not used	Not used	Not used

9.2 EXTERIOR SECION

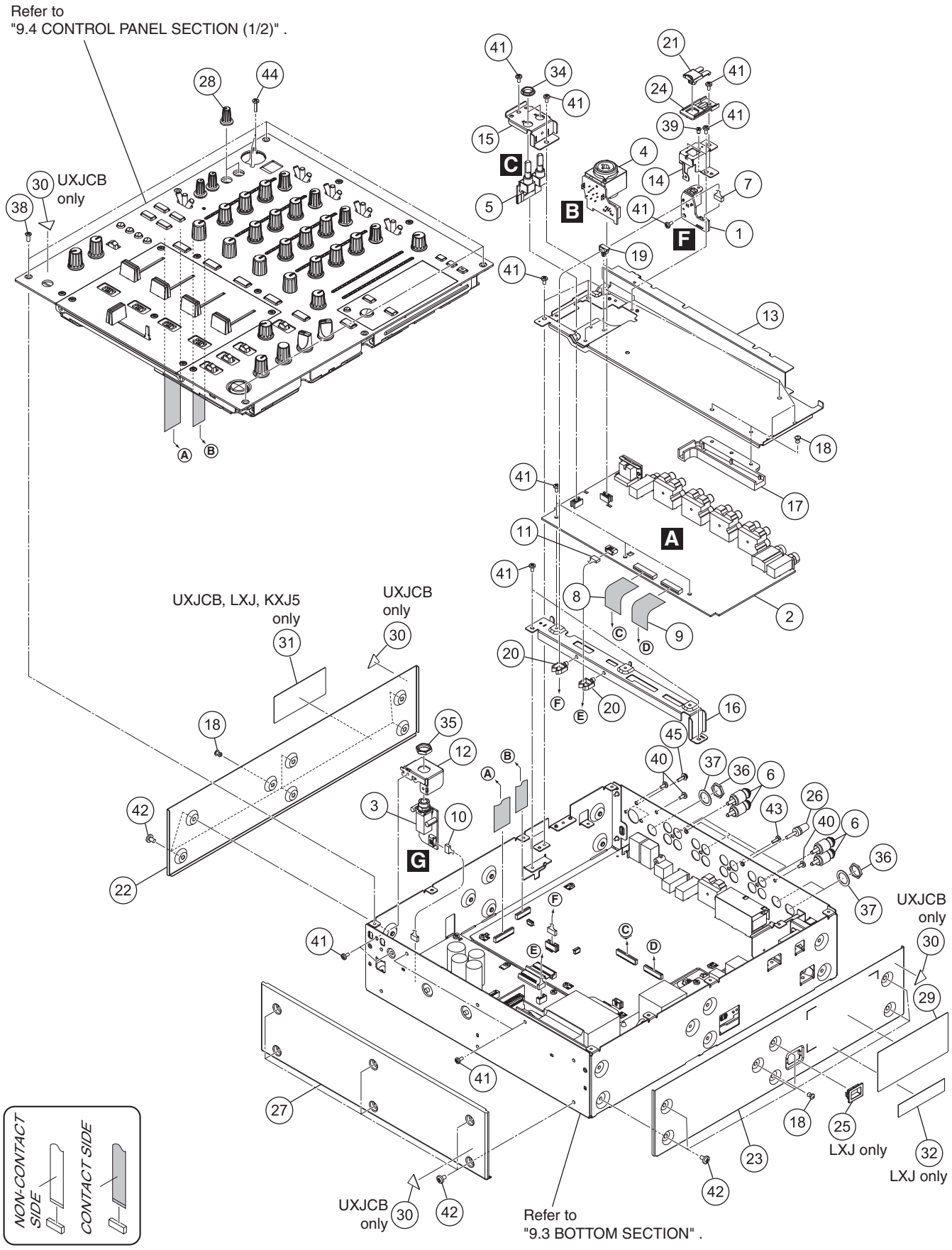

(1) EXTERIOR SECION PARTS LIST

Mark	No.	Description	Part No.
	1	USBI Assy	DWX3361
	2	INPUT Assy	DWX3362
	3	HPJK Assy	DWX3363
	4	MIC1 Assy	DWX3371
	5	MTRM Assy	DWX3372
	6	Short Pin Plug	AKM7008
	7	Shielded Conn-Cable	DDA1043
	8	FFC/25P	DDD1597
	9	FFC/22P	DDD1598
	10	Connector Assy (J2)	PF04PP-S05
	11	Cable (J3)	PF04PP-S17
	12	Stay/HP	DNF1907
	13	Shield Plate/INP	DNF1908
	14	Bracket/USB	DNF1909
	15	Bracket/MIC	DNF1910
	16	Stay/INP	DNF1911
	17	Cover/PCB	DNK6136
	18	Nylon Rivet	AEC1671
	19	Locking Mini Clamp	DEC2439
	20	Holder	VEC1355
	21	USB Cover B	DNK5868
	22	Side Panel L	DNK6061
	23	Side Panel R	See Contrast table (2)
	24	Panel/USB	DNK6120
	25	Knob/POW	See Contrast table (2)
	26	Terminal Screw	AKE-031
	27	Front Panel	DNK6063
	28	Knob/MIC	DAA1301
NSP	29	Label	See Contrast table (2)
NSP	30	Label	See Contrast table (2)
NSP	31	Caution Label	See Contrast table (2)
NSP	32	V Select Label	See Contrast table (2)
	33	•••••	
	34	Flange Nut M9	DBN1008
	35	Nut M12	DBN1018
	36	Nut (M12)	NKX2FNI
	37	Washer	DEC2920
	38	Screw (FE)	See Contrast table (2)
	39	Screw (M3*5)	DBA1340
	40	Screw	BBZ30P060FTB
	41	Screw	BBZ30P060FTC
	42	Screw	BBZ40P060FTB
	43	Screw	BPZ30P080FTB
	44	Screw	BPZ30P120FTB
	45	Screw	PMH30P100FTB

(2) CONTRAST TABLE

DJM-850-K/SYXJ8, UXJCB, LXJ, KXJ5, XJCN5, DJM-850-S/SYXJ8, UXJCB, LXJ, KXJ5 and XJCN5 are constructed the same except for the following:

Mark	No.	Symbol and Description	DJM-850-K /SYXJ8	DJM-850-K /UXJCB	DJM-850-K /LXJ	DJM-850-K /KXJ5	DJM-850-K /XJCN5
	23	Side Panel R	DNK6062	DNK6062	Not used	DNK6062	DNK6062
	23	Side Panel R/G	Not used	Not used	DNK6065	Not used	Not used
	25	Knob/POW	Not used	Not used	DNK6066	Not used	Not used
NSP	29	Label	DAL1207	DAL1208	DAL1209	DAL1212	DAL1211
NSP	30	Label	Not used	DRW1975	Not used	Not used	Not used
NSP	31	Caution Label	Not used	DRW2429	DRW2430	DRW2542	Not used
NSP	32	V Select Label	Not used	Not used	DRW2400	Not used	Not used
	38	Screw (FE)	DBA1290	DBA1290	DBA1290	DBA1290	DBA1290

Mark	No.	Symbol and Description	DJM-850-S /SYXJ8	DJM-850-S /UXJCB	DJM-850-S /LXJ	DJM-850-S /KXJ5	DJM-850-S /XJCN5
	23	Side Panel R	DNK6062	DNK6062	Not used	DNK6062	DNK6062
	23	Side Panel R/G	Not used	Not used	DNK6065	Not used	Not used
	25	Knob/POW	Not used	Not used	DNK6066	Not used	Not used
NSP	29	Label	DAL1213	DAL1214	DAL1215	DAL1218	DAL1217
NSP	30	Label	Not used	DRW1975	Not used	Not used	Not used
NSP	31	Caution Label	Not used	DRW2429	DRW2430	DRW2542	Not used
NSP	32	V Select Label	Not used	Not used	DRW2400	Not used	Not used
	38	Screw (FE)	DBA1436	DBA1436	DBA1436	DBA1436	DBA1436

9.3 BOTTOM SECTION

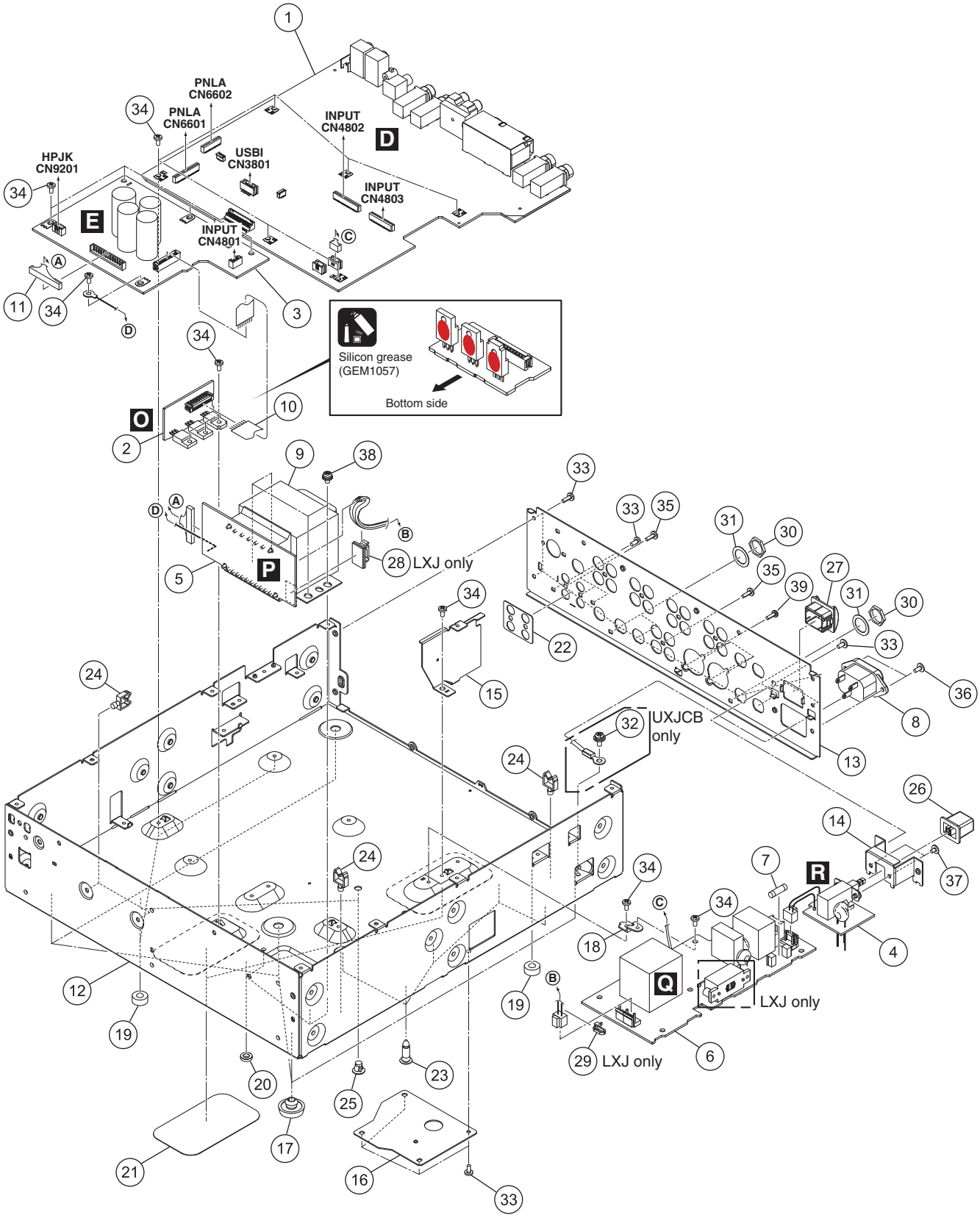

(1) BOTTOM SECTION PARTS LIST

Mark	No.	Description	Part No.
	1	MAIN Assy	DWX3360
	2	REG Assy	DWR1510
	3	SEC/HP Assy	DWR1511
	4	ACSW Assy	DWR1515
	5	TRANS Assy	See Contrast table (2)
	6	PRIMARY Assy	See Contrast table (2)
⚠	7	Fuse (FU1: T630 mA)	AEK1052
⚠	8	AC Inlet	See Contrast table (2)
⚠	9	Transformer/L (T3101)	See Contrast table (2)
	10	Jumper Wire (J1)	D20PYY1010E
	11	Connector Assy (J4)	PF13EE-S17
NSP	12	Chassis	DNA1437
	13	Rear Panel	See Contrast table (2)
	14	Bracket PSW	DNF1759
	15	Shield Plate/PW	DNF1906
NSP	16	Plate	DNK6124
	17	Foot (Rubber)	REC-434
NSP	18	PCB Stay (FE)	VNE2489
NSP	19	Spacer	AEB7092
	20	Spacer	DEB1998
	21	Sheet/BOT	DEC3404
NSP	22	Insulating Sheet	DMR1010
	23	PCB Holder	PNW2029
	24	Holder	VEC1355
NSP	25	PC Support	VEC1749
	26	Power Knob	DAC2306
	27	Power Knob Guard	DNK4534
	28	Locking Wire Saddle	See Contrast table (2)
	29	Binder	See Contrast table (2)
	30	Nut (M12)	NKX2FNI
	31	Washer	DEC2920
	32	Screw	See Contrast table (2)
	33	Screw	BBZ30P060FTB
	34	Screw	BBZ30P060FTC
	35	Screw	BPZ30P080FTB
	36	Screw	IBZ30P080FTB
	37	Screw	IMZ30P040FTC
	38	Screw	PMB40P060FTB
	39	Screw	PPZ30P080FTB

(2) CONTRAST TABLE

DJM-850-K/SYXJ8, UXJCB, LXJ, KXJ5, XJCN5, DJM-850-S/SYXJ8, UXJCB, LXJ, KXJ5 and XJCN5 are constructed the same except for the following:

Mark	No.	Symbol and Description	DJM-850-K /SYXJ8	DJM-850-K /UXJCB	DJM-850-K /LXJ	DJM-850-K /KXJ5	DJM-850-K /XJCN5
	5	TRANS Assy	DWR1516	DWR1517	DWR1512	DWR1516	DWR1516
	6	PRIMARY Assy	DWR1519	DWR1520	DWR1509	DWR1519	DWR1519
⚠	8	AC Inlet/2P	DKP3916	Not used	DKP3916	DKP3916	DKP3916
⚠	8	AC Inlet/3P	Not used	DKP3915	Not used	Not used	Not used
⚠	9	Transformer/L (T3101)	DTT1256	DTT1257	DTT1256	DTT1256	DTT1256
	13	Rear Panel	DNC2069	DNC2070	DNC2081	DNC2082	DNC2073
	28	Locking Wire Saddle	Not used	Not used	DEC3439	Not used	Not used
	29	Binder	Not used	Not used	ZCA-SKB90BK	Not used	Not used
	32	Screw	Not used	PMH40P080FTC	Not used	Not used	Not used

Mark	No.	Symbol and Description	DJM-850-S /SYXJ8	DJM-850-S /UXJCB	DJM-850-S /LXJ	DJM-850-S /KXJ5	DJM-850-S /XJCN5
	5	TRANS Assy	DWR1516	DWR1517	DWR1512	DWR1516	DWR1516
	6	PRIMARY Assy	DWR1519	DWR1520	DWR1509	DWR1519	DWR1519
⚠	8	AC Inlet/2P	DKP3916	Not used	DKP3916	DKP3916	DKP3916
⚠	8	AC Inlet/3P	Not used	DKP3915	Not used	Not used	Not used
⚠	9	Transformer/L (T3101)	DTT1256	DTT1257	DTT1256	DTT1256	DTT1256
	13	Rear Panel	DNC2069	DNC2070	DNC2081	DNC2082	DNC2073
	28	Locking Wire Saddle	Not used	Not used	DEC3439	Not used	Not used
	29	Binder	Not used	Not used	ZCA-SKB90BK	Not used	Not used
	32	Screw	Not used	PMH40P080FTC	Not used	Not used	Not used

9.4 CONTROL PANEL SECTION (1/2)

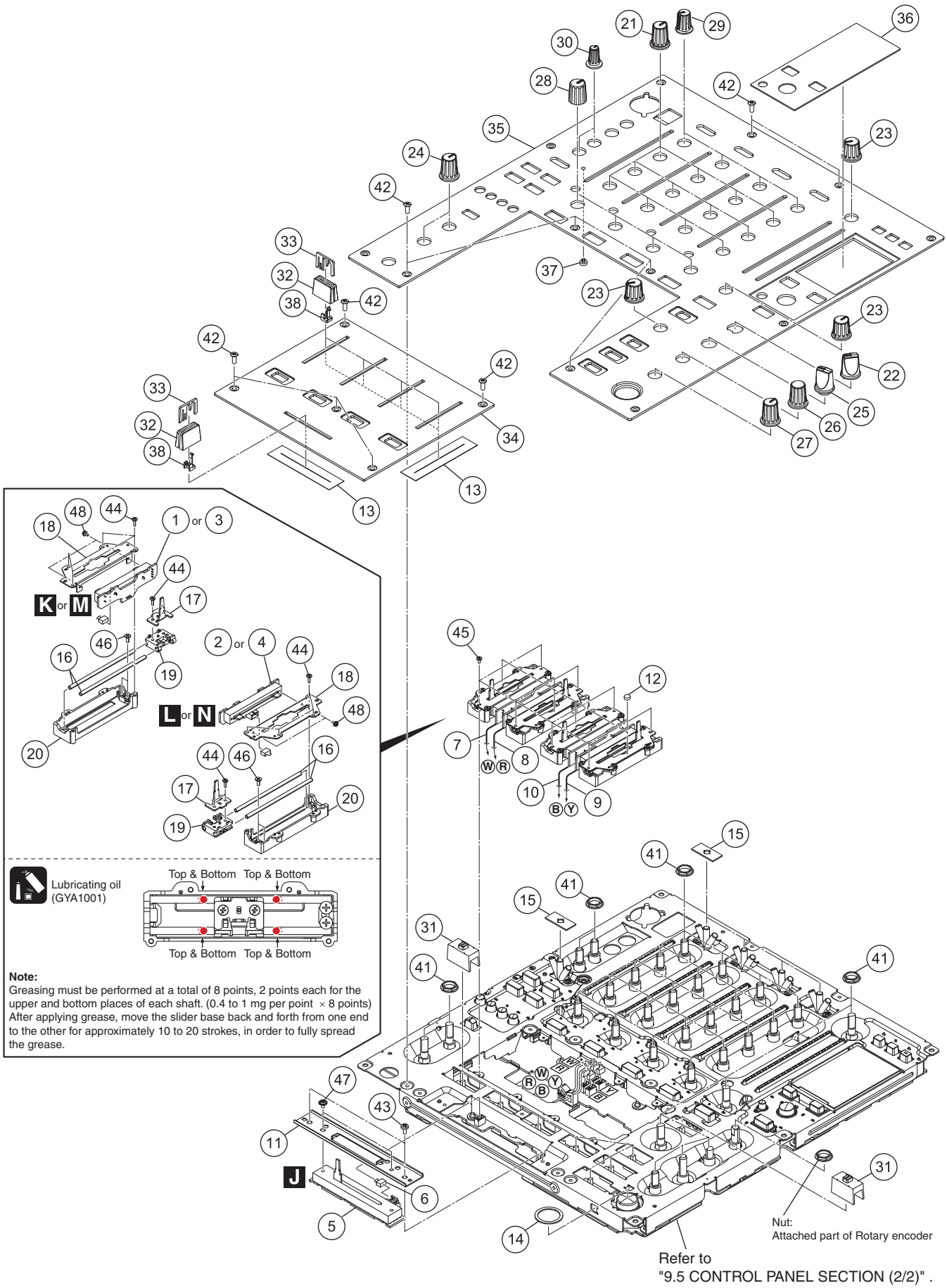

(1) CONTROL PANEL SECTION (1/2) PARTS LIST

Mark	No.	Description	Part No.
	1	FAD1 Assy	DWX3366
	2	FAD2 Assy	DWX3367
	3	FAD3 Assy	DWX3368
	4	FAD4 Assy	DWX3369
	5	FADC Assy	DWX3370
	6	Connector Assy	PF03PP-B07
	7	Connector Assy	PF03PP-B12
	8	Connector Assy	PF03PP2B07
	9	Connector Assy	PF03PP4B12
	10	Connector Assy	PF03PP6B07
	11	CRF Stay	DNF1870
	12	SW Cushion HH48/2	DEC2538
	13	Fader Packing	DEC2903
	14	SW Packing (EF)	DEC2929
	15	SW Packing	DED1177
NSP	16	Guide Shaft (S)	DLA1918
	17	Lever Plate	DNH2954
	18	VR Stay	DNH2955
	19	Slider Base	DNK5851
	20	Shaft Holder	DNK5852
	21	Rotary SW Knob (B)	DAA1176
	22	Select Knob	DAA1205
	23	Knob (MA)	DAA1210
	24	Knob (Black)	DAA1212
	25	FX SEL Knob	DAA1213
	26	Knob (TIME)	DAA1214
	27	Rotary Knob (BN)	DAA1220
	28	Rotary SW Knob (HM)	DAA1256
	29	Knob/CH	DAA1300
	30	Knob/EQ	DAA1302
	31	Slide SW Cap (W)	DAC2401
	32	Slider Knob 1	DAC2684
	33	Slider Knob 2	DAC2685
	34	Fader Panel	See Contrast table (2)
	35	Control Panel	See Contrast table (2)
	36	Panel/FL	DAH2877
	37	Lens	DNK4532
	38	Slider Knob Stopper	DNK5888
	39	•••••	
	40	•••••	
	41	Flange Nut M9	DBN1008
	42	Screw (FE)	See Contrast table (2)
	43	Screw	BBZ30P060FTC
	44	Screw	BPZ20P060FTC
	45	Screw	BSZ20P040FTB
	46	Screw	CPZ26P080FTC
	47	Screw	IMZ30P040FTC
	48	Screw	PMH20P040FTC

(2) CONTRAST TABLE

DJM-850-K/SYXJ8, UXJCB, LXJ, KXJ5, XJCN5, DJM-850-S/SYXJ8, UXJCB, LXJ, KXJ5 and XJCN5 are constructed the same except for the following:

Mark	No.	Symbol and Description	DJM-850-K /SYXJ8	DJM-850-K /UXJCB	DJM-850-K /LXJ	DJM-850-K /KXJ5	DJM-850-K /XJCN5
	34	Fader Panel	DNB1196	DNB1196	DNB1196	DNB1196	DNB1196
	35	Control Panel	DNB1197	DNB1197	DNB1197	DNB1197	DNB1197
	42	Screw (FE)	DBA1290	DBA1290	DBA1290	DBA1290	DBA1290

Mark	No.	Symbol and Description	DJM-850-S /SYXJ8	DJM-850-S /UXJCB	DJM-850-S /LXJ	DJM-850-S /KXJ5	DJM-850-S /XJCN5
	34	Fader Panel	DNB1201	DNB1201	DNB1201	DNB1201	DNB1201
	35	Control Panel	DNB1202	DNB1202	DNB1202	DNB1202	DNB1202
	42	Screw (FE)	DBA1436	DBA1436	DBA1436	DBA1436	DBA1436

9.5 CONTROL PANEL SECTION (2/2)

• Bottom view

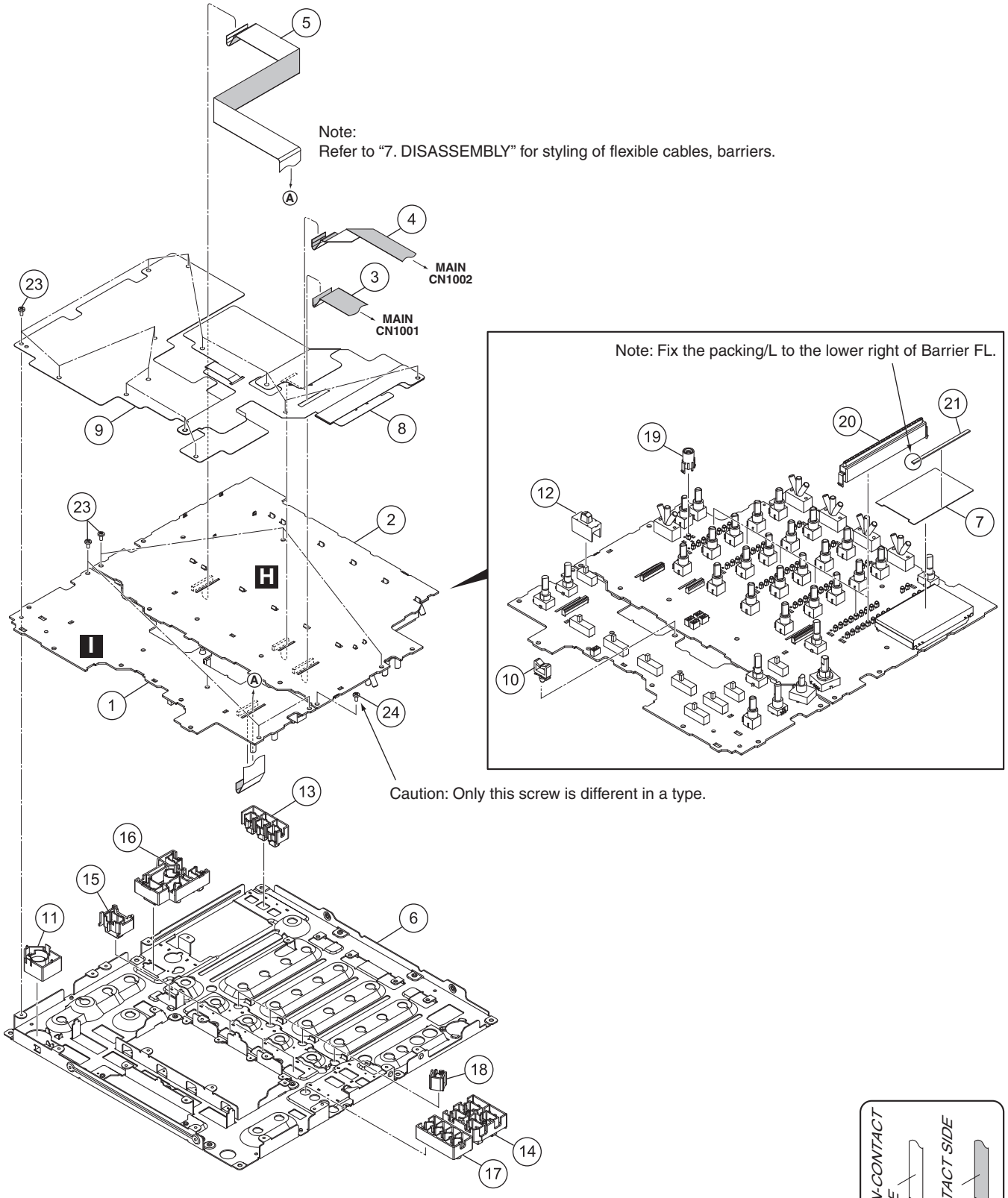

CONTROL PANEL SECTION (2/2) PARTS LIST

Mark	No.	Description	Part No.
	1	PNLB Assy	DWX3365
	2	PNLA Assy	DWX3359
	3	FFC/24P	DDD1599
	4	FFC/17P	DDD1600
	5	FFC/27P	DDD1601
	6	Panel Stay	DND1272
	7	Barrier FL	DEC3351
	8	Barrier/PNL	DMR1007
	9	Barrier/A	DMR1009
	10	Wire Saddle	XEC3100
	11	Effect Knob	DAC2304
	12	Slide SW Cap	DAC2400
	13	Button (MIDI)	DAC2655
	14	Button/CFX	DAC2837
	15	Button/CUE	DAC2838
	16	Button/TAP	DAC2839
	17	Button/FS	DAC2840
	18	Button/BFX	DAC2841
	19	Lens Holder	DNK4533
	20	Lebel Meter Assy	DXB1882
	21	Packing/L	DEC3416
	22	•••••	
	23	Screw	BBZ30P060FTC
	24	Screw	PBH30P080FTB