2. EXPLODED VIEWS AND PARTS LIST

NOTES:
- *Parts marked by "NSP" are generally unavailable because they are not in our Master Spare Parts List.*
- *The ⚠ mark found on some component parts indicates the importance of the safety factor of the part. Therefore, when replacing, be sure to use parts of identical designation.*
- *Screws adjacent to ▼ mark on product are used for disassembly.*
- *For the applying amount of lubricants or glue, follow the instructions in this manual. (In the case of no amount instructions, apply as you think it appropriate.)*

2.1 PACKING SECTION

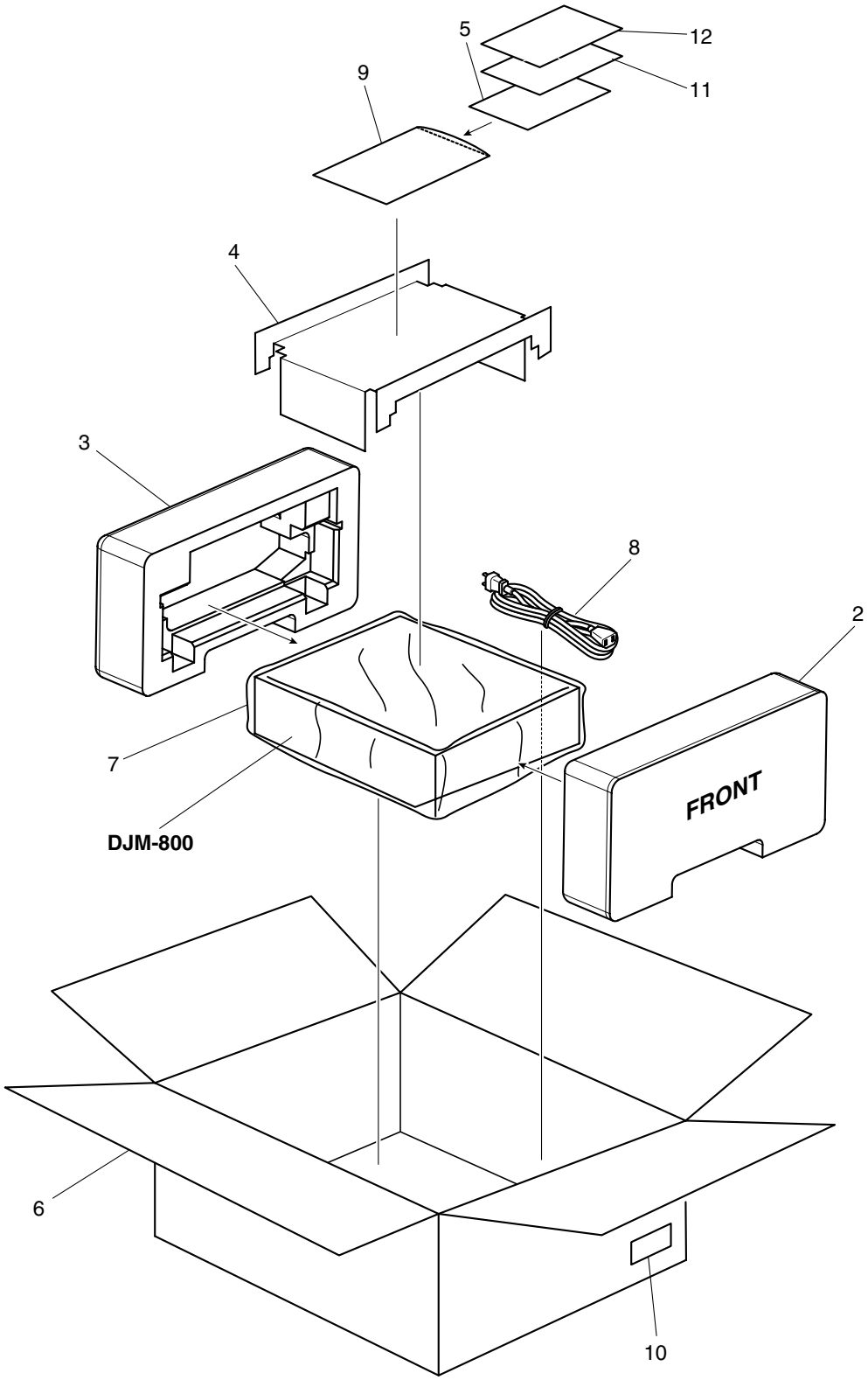

(1) PACKING SECTION PARTS LIST

Mark	No.	Description	Part No.
	1	• • • •	
	2	Pad Front	DHA1698
	3	Pad Rear	DHA1699
	4	Pad Top	DHA1705
	5	Instruction Manual(M800)	See Contrast table (2)
	6	Packing Case	See Contrast table (2)
	7	Sheet	RHX1006
⚠	8	Power Cord	See Contrast table (2)
NSP	9	Polyethylene Bag	AHG7117
NSP	10	Label	See Contrast table (2)
NSP	11	Warranty Card	See Contrast table (2)
NSP	12	User Registration Sheet	DRM1262

(2) CONTRAST TABLE

DJM-800/WYXJ5, DJM-800/TLXJ and DJM-800/KUCXJ are constructed the same except for the fHollowing

Mark	No.	Symbol and Description	DJM-800 /KUCXJ	DJM-800 /WYXJ5	DJM-800 /TLXJ
	5	Instruction Manual (English)	DRB1393	Not used	Not used
	5	Instruction Manual (English, French German, Italian, Dutch, Spanish)	Not used	DRB1392	Not used
	5	Instruction Manual (English, Spanish, Chinese)	Not used	Not used	DRB1394
	6	Packing Case	DHG2559	DHG2558	DHG2560
⚠	8	Power Cord	DDG1028	ADG7062	ADG7062
NSP	10	Label	DRW2311	VRW1629	VRW1629
NSP	11	Warranty Card	ARY7043	Not used	Not used

2.2 EXTERIOR SECTION

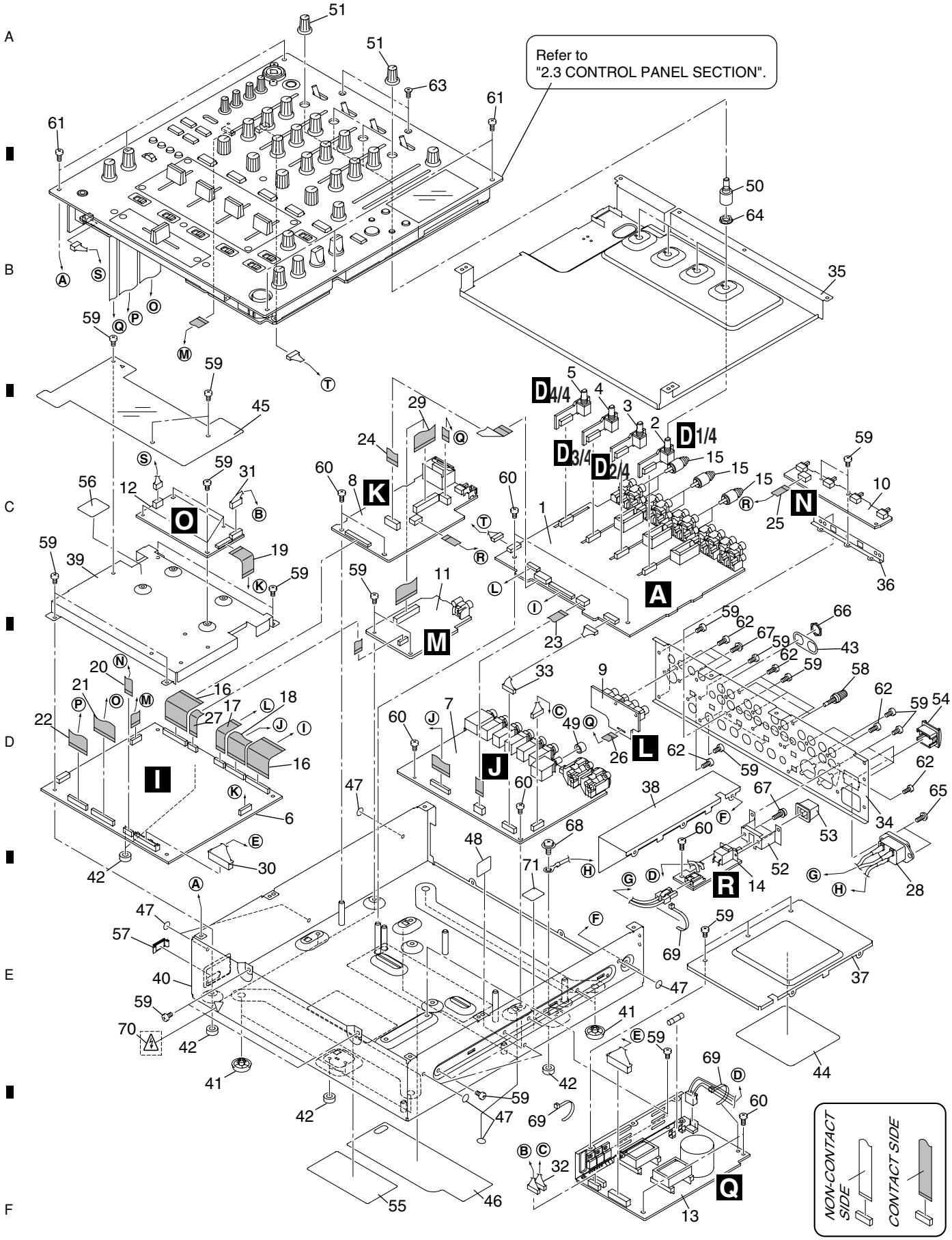

EXTERIOR SECTION PARTS LIST

Mark	No.	Description	Part No.
	1	INPUT Assy	DWX2535
	2	TRIM 4 Assy	DWX2551
	3	TRIM 3 Assy	DWX2550
	4	TRIM 2 Assy	DWX2549
	5	TRIM 1 Assy	DWX2548
	6	DSP Assy	DWX2534
	7	OUTPUT Assy	DWX2544
	8	DIGIC Assy	DWX2547
	9	DIGIA Assy	DWX2555
	10	SLSW Assy	DWX2536
	11	DIGIB Assy	DWX2546
	12	HPAMP Assy	DWX2556
⚠	13	POWER SUPPLY Unit	DWR1433
	14	ACSW Assy	DWX2545
	15	Short Pin Plug	AKM7008
	16	Flexible Cable (31P)	DDD1316
	17	Flexible Cable (12P)	DDD1317
	18	Flexible Cable (25P)	DDD1318
	19	Flexible Cable (16P)	DDD1319
	20	Flexible Cable (10P)	DDD1321
	21	Flexible Cable (30P)	DDD1322
	22	Flexible Cable (25P)	DDD1323
	23	Flexible Cable (7P)	DDD1326
	24	Flexible Cable (12P)	DDD1327
	25	Flexible Cable (6P)	DDD1328
	26	Flexible Cable (7P)	DDD1329
	27	Flexible Cable (10P)	DDD1333
⚠	28	AC Inlet Assy	See Contrast table (2)
	29	Flexible Cable (24P)	DDD1330
	30	Connector Assy(10P-12P)	DKP3763
	31	Connector Assy	PF05EE-S22
	32	Connector Assy	PF05EE4S32
	33	Connector Assy	PF06EE-D12
NSP	34	Rear Panel	See Contrast table (2)
	35	Bracket TRIM	DNF1728
	36	Bracket SSW	DNF1729
	37	Shield Case	DNH2697
	38	Shield Case AC	DNH2698
	39	Shield Case DSP	DNH2699
	40	Chassis Assy	DXB1881
	41	Leg Assy	REC-434
NSP	42	Spacer	AEB7092
	43	PHONE Spacer	DEC2914
	44	Barrier A	DEC2915
	45	Styling Sheet	DEC2917
	46	Bottom Cover	DEC2918
	47	Blind Label	DEC2928
	48	Barrier B	DEC2944
	49	Select Knob (S)	DAA1166
	50	Extension Shaft	DNK4691
	51	Rotary SW Knob S	DAA1204
	52	Bracket PSW	DNF1730
	53	POWER Knob	DAC2306
	54	POWER Knob Guard	DNK4534
NSP	55	LABEL	See Contrast table (2)
	56	CAUTION Label	DRW2312
	57	Blind Cap	DNK4218
	58	Terminal Screw	AKE-031-0
	59	Screw	BBZ30P060FTB
	60	Screw	BBZ30P080FTC
	61	Screw	BCZ30P080FTB
	62	Screw	BPZ30P080FTB
	63	Screw	CCZ30P060FTB
	64	Flange Nut M7	DBN1011
	65	Screw	IBZ30P080FTB
	66	Nut	NKX2FTC
	67	Screw	PMH30P100FTB
	68	Screw	PMH40P080FTC
	69	Binder (SKB-90BK)	ZCA-SKB90BK
NSP	70	Caution LABEL	See Contrast table (2)
NSP	71	Earth LABEL	See Contrast table (2)

(2) CONTRAST TABLE

DJM-800/WYXJ5, /TLXJ and DJM-800/KUCXJ are constructed the same except for the fHollowing :

Mark	No.	Symbol and Description	DJM-800 /KUCXJ	DJM-800 /WYXJ5	DJM-800 /TLXJ
⚠	28	AC Inlet Assy	DKP3761	DKP3762	DKP3762
NSP	34	Rear Panel	DNC1800	DNC1789	DNC1791
NSP	55	LABEL	DRW2294	DRW2293	DRW2319
NSP	70	Caution LABEL	DRW1975	Not used	Not used
NSP	71	Earth LABEL	DRW2276	Not used	Not used

2.3 CONTROL PANEL SECTION

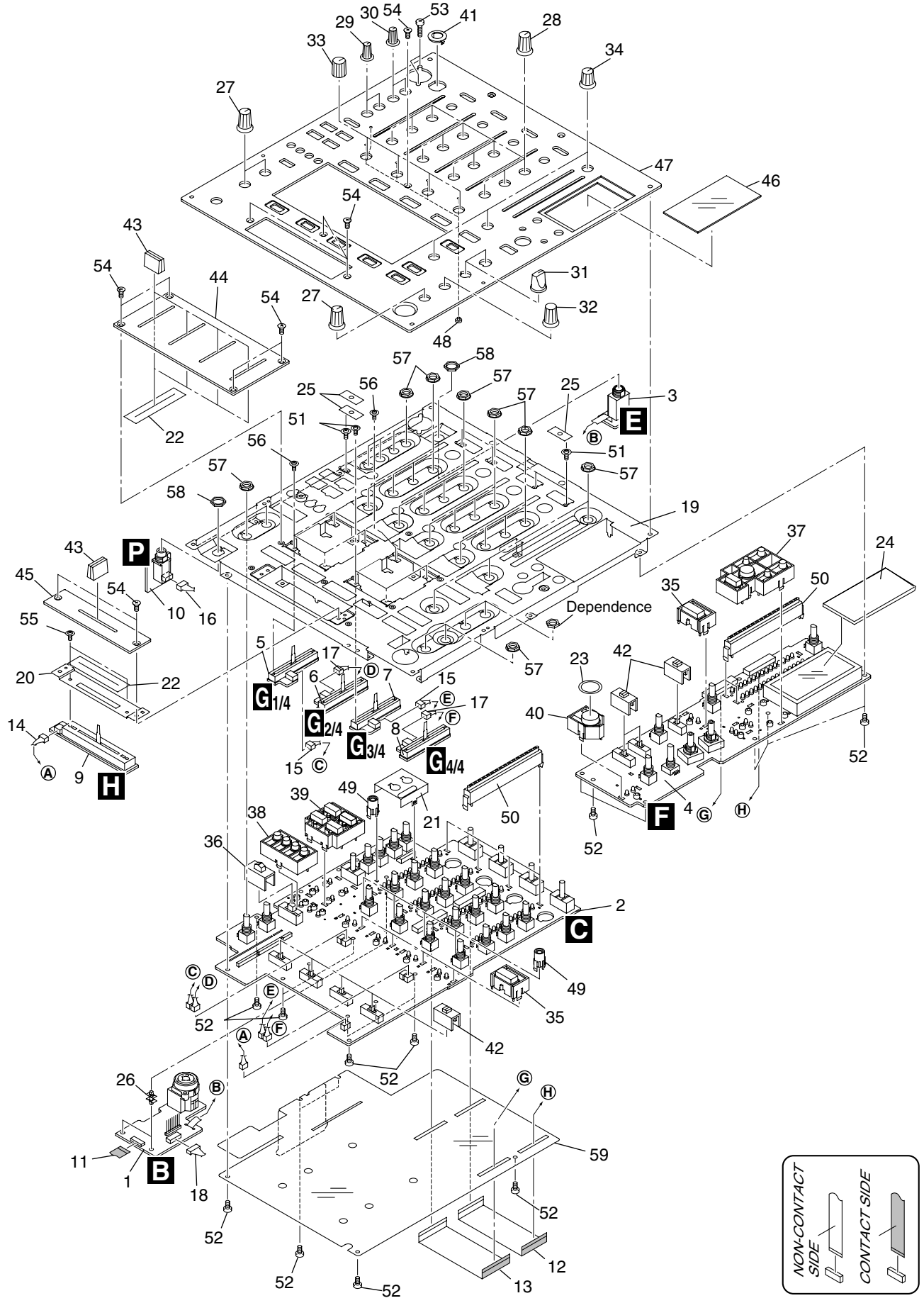

CONTROL PANEL SECTION PARTS LIST

Mark	No.	Description	Part No.
	1	MIC 1 Assy	DWX2542
	2	PANEL 1 Assy	DWX2552
	3	MIC 2 Assy	DWX2543
	4	PANEL 2 Assy	DWX2554
	5	CHFD 1 Assy	DWX2537
	6	CHFD 2 Assy	DWX2538
	7	CHFD 3 Assy	DWX2539
	8	CHFD 4 Assy	DWX2540
	9	CRSFD Assy	DWX2541
	10	HP JACK Assy	DWX2553
	11	Flexible Cable (12P)	DDD1320
	12	Flexible Cable (27P)	DDD1324
	13	Flexible Cable (30P)	DDD1325
	14	Housing Wire Assy	PF03PP-D12
	15	Housing Wire Assy	PF04PP-D05
	16	Housing Wire Assy	PF04PP-D20
	17	Housing Wire Assy	PF04PP4D05
	18	Housing Wire Assy	PF05FF-D25
NSP	19	Panel Stay	DND1254
	20	CRF Stay	DNF1726
	21	MIC Stay	DNF1727
	22	Fader Packing	DEC2903
	23	SW Packing	DEC2929
	24	Barrier (FL)	DEC2943
	25	SW Packing	DED1177
NSP	26	PC Support	VEC1508
	27	Rotary SW Knob (A)	DAA1175
	28	Rotary SW Knob (B)	DAA1176
	29	Rotary SW Knob S (A)	DAA1177
	30	Rotary SW Knob S (B)	DAA1178
	31	Select Knob	DAA1205
	32	Rotary SW Knob (C)	DAA1180
	33	Rotary SW Knob (HM)	DAA1197
	34	Rotary SW Knob (MA)	DAA1198
	35	CUE Knob	DAC2215
	36	Slide SW Cap (A)	DAC2219
	37	SET Knob (TAP)	DAC2300
	38	SET Knob (FS)	DAC2301
	39	SET Knob (HM)	DAC2302
	40	EFFECT Knob	DAC2304
	41	MIC Cap	DAC2309
	42	Slide SW Cap	DAC2310
	43	Slider Knob (L2)	DAC2371
	44	CHF Panel	DAH2426
	45	CRF Panel	DAH2427
	46	Disply Panel	DAH2428
	47	Control Panel	DNB1144
	48	LENS	DNK4532
	49	LENS Holder	DNK4533
	50	LEVEL Meter Assy	DXB1882
	51	Screw	AMZ26P040FTC
	52	Screw	BBZ30P060FTB
	53	Screw	BPZ30P120FTB
	54	Screw	CCZ30P060FTB
	55	Screw	DBA1262
	56	Screw	DBA1298
	57	Flange Nut M9	DBN1008
	58	Nut	NKX2FTC