9. EXPLODED VIEWS AND PARTS LIST

NOTES:
- *Parts marked by "NSP" are generally unavailable because they are not in our Master Spare Parts List.*
- *The ⚠ mark found on some component parts indicates the importance of the safety factor of the part. Therefore, when replacing, be sure to use parts of identical designation.*
- *Screws adjacent to ▼ mark on product are used for disassembly.*
- *For the applying amount of lubricants or glue, follow the instructions in this manual. (In the case of no amount instructions, apply as you think it appropriate.)*

9.1 PACKING SECTION

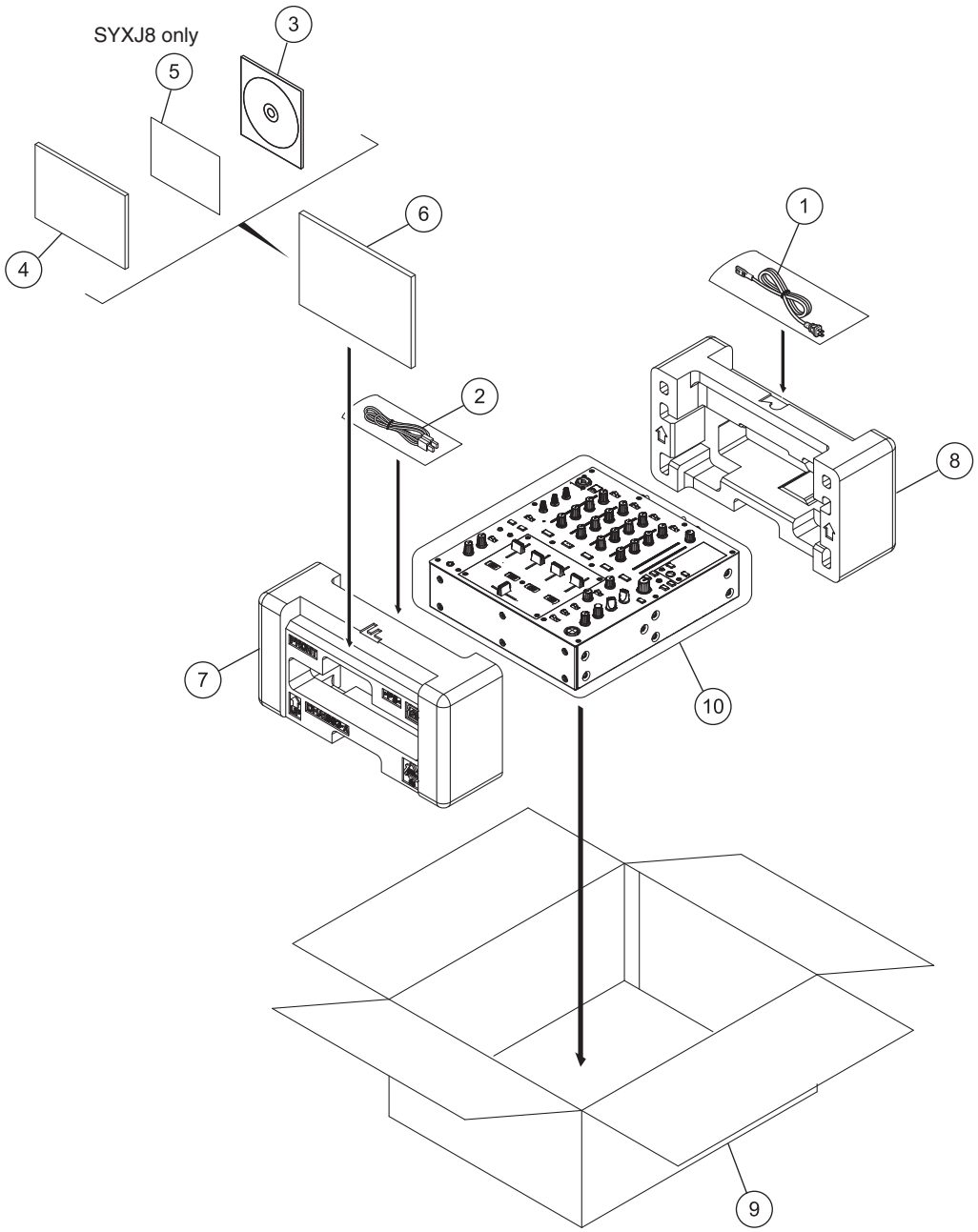

(1) PACKING SECTION PARTS LIST

Mark	No.	Description	Part No.
⚠	1	Power Cord	See Contrast table (2)
	2	USB Cable	DDE1128
	3	Driver Software/ Operating Instructions CD-ROM	DXX2726
	4	Read Before Use (Important)/ Quick Start Guide	See Contrast table (2)
NSP	5	Warranty	See Contrast table (2)
NSP	6	Polyethylene Bag	AHG7117
	7	Packing Pad/A	DHA1883
	8	Packing Pad/B	DHA1884
	9	Packing Case	See Contrast table (2)
	10	Packing Sheet	RHC1023

(2) CONTRAST TABLE

DJM-750-K/SYXJ8, UXJCB, LXJ, KXJ5, XJCN5, DJM-750-S/SYXJ8, UXJCB, LXJ, KXJ5 and XJCN5 are constructed the same except for the following:

Mark	No.	Symbol and Description	DJM-750-K /SYXJ8	DJM-750-K /UXJCB	DJM-750-K /LXJ	DJM-750-K /KXJ5	DJM-750-K /XJCN5
⚠	1	Power Cord	ADG7062	DDG1108	ADG7062	ADG7115	ADG7105
	4	Read Before Use (Important) /Quick Start Guide	DRH1205	DRH1206	DRH1216	DRH1219	DRH1218
NSP	5	Warranty	ARY7158	Not used	Not used	Not used	Not used
	9	Packing Case	DHG3239	DHG3240	DHG3241	DHG3244	DHG3243

Mark	No.	Symbol and Description	DJM-750-S /SYXJ8	DJM-750-S /UXJCB	DJM-750-S /LXJ	DJM-750-S /KXJ5	DJM-750-S /XJCN5
⚠	1	Power Cord	ADG7062	DDG1108	ADG7062	ADG7115	ADG7105
	4	Read Before Use (Important) /Quick Start Guide	DRH1205	DRH1206	DRH1216	DRH1219	DRH1218
NSP	5	Warranty	ARY7158	Not used	Not used	Not used	Not used
	9	Packing Case	DHG3245	DHG3246	DHG3247	DHG3250	DHG3249

9.2 EXTERIOR SECION

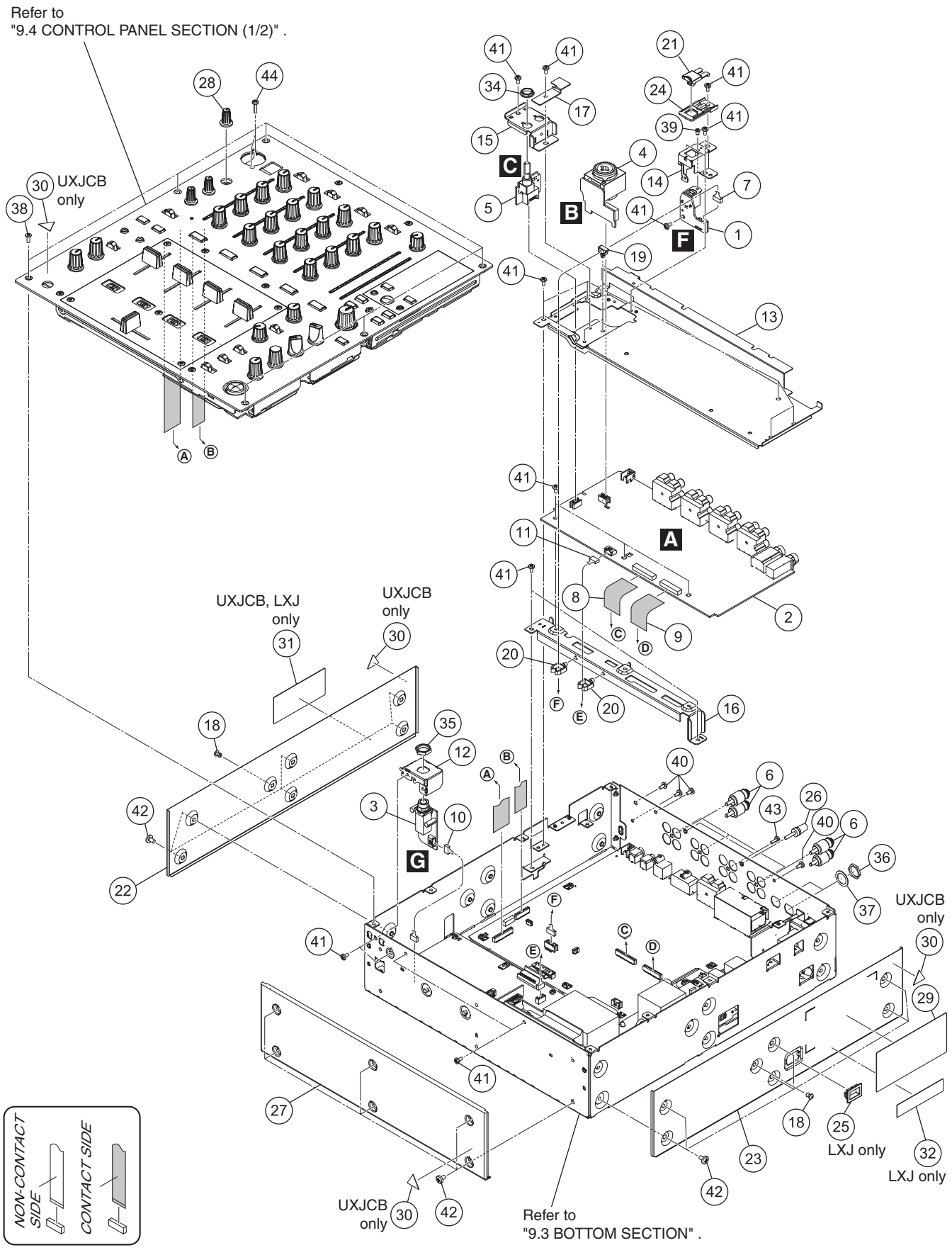

(1) EXTERIOR SECION PARTS LIST

Mark	No.	Description	Part No.
	1	USBI Assy	DWX3431
	2	INPUT Assy	DWX3432
	3	HPJK Assy	DWX3433
	4	MIC1 Assy	DWX3441
	5	MTRM Assy	DWX3442
	6	Plug/Pin	DKM1024
	7	Shielded Conn-Cable	DDA1043
	8	FFC/25P	DDD1597
	9	FFC/22P	DDD1598
	10	Connector Assy	PF04PP-S05
	11	Cable	PF04PP-S17
	12	Stay/HP	DNF1907
	13	Shield Plate/INP	DNF1908
	14	Bracket/USB	DNF1909
	15	Bracket/MIC	DNF1929
	16	Stay/INP	DNF1911
	17	Bracket/SCN	DNH3090
	18	Nylon Rivet	AEC1671
	19	Locking Mini Clamp	DEC2439
	20	Holder	VEC1355
	21	USB Cover B	DNK5868
	22	Side Panel L	DNK6061
	23	Side Panel R	See Contrast table (2)
	24	Panel/USB	DNK6120
	25	Knob/POW	See Contrast table (2)
	26	Terminal Screw	AKE-031
	27	Front Panel	DNK6063
	28	Knob/EQ	DAA1302
NSP	29	Name Label	See Contrast table (2)
NSP	30	Label	See Contrast table (2)
NSP	31	Caution Label	See Contrast table (2)
NSP	32	V Select Label	See Contrast table (2)
	33	•••••	
	34	Flange Nut M9	DBN1008
	35	Nut (M12)	NKX2FNI
	36	Nut M12	DBN1018
	37	Washer	DEC2920
	38	Screw (FE)	See Contrast table (2)
	39	Screw (M3*5)	DBA1340
	40	Screw	BBZ30P060FTB
	41	Screw	BBZ30P060FTC
	42	Screw	BBZ40P060FTB
	43	Screw	BPZ30P080FTB
	44	Screw	BPZ30P120FTB

(2) CONTRAST TABLE

DJM-750-K/SYXJ8, UXJCB, LXJ, KXJ5, XJCN5, DJM-750-S/SYXJ8, UXJCB, LXJ, KXJ5 and XJCN5 are constructed the same except for the following:

Mark	No.	Symbol and Description	DJM-750-K /SYXJ8	DJM-750-K /UXJCB	DJM-750-K /LXJ	DJM-750-K /KXJ5	DJM-750-K /XJCN5
	23	Side Panel R	DNK6062	DNK6062	DNK6065	DNK6062	DNK6062
	25	Knob/POW	Not used	Not used	DNK6066	Not used	Not used
NSP	29	Name Label	DAL1260	DAL1245	DAL1246	DAL1249	DAL1248
NSP	30	Label	Not used	DRW1975	Not used	Not used	Not used
NSP	31	Caution Label	Not used	DRW2429	DRW2430	Not used	Not used
NSP	32	V Select Label	Not used	Not used	DRW2400	Not used	Not used
	38	Screw (FE)	DBA1290	DBA1290	DBA1290	DBA1290	DBA1290

Mark	No.	Symbol and Description	DJM-750-S /SYXJ8	DJM-750-S /UXJCB	DJM-750-S /LXJ	DJM-750-S /KXJ5	DJM-750-S /XJCN5
	23	Side Panel R	DNK6062	DNK6062	DNK6065	DNK6062	DNK6062
	25	Knob/POW	Not used	Not used	DNK6066	Not used	Not used
NSP	29	Name Label	DAL1261	DAL1251	DAL1252	DAL1255	DAL1254
NSP	30	Label	Not used	DRW1975	Not used	Not used	Not used
NSP	31	Caution Label	Not used	DRW2429	DRW2430	Not used	Not used
NSP	32	V Select Label	Not used	Not used	DRW2400	Not used	Not used
	38	Screw (FE)	DBA1436	DBA1436	DBA1436	DBA1436	DBA1436

9.3 BOTTOM SECTION

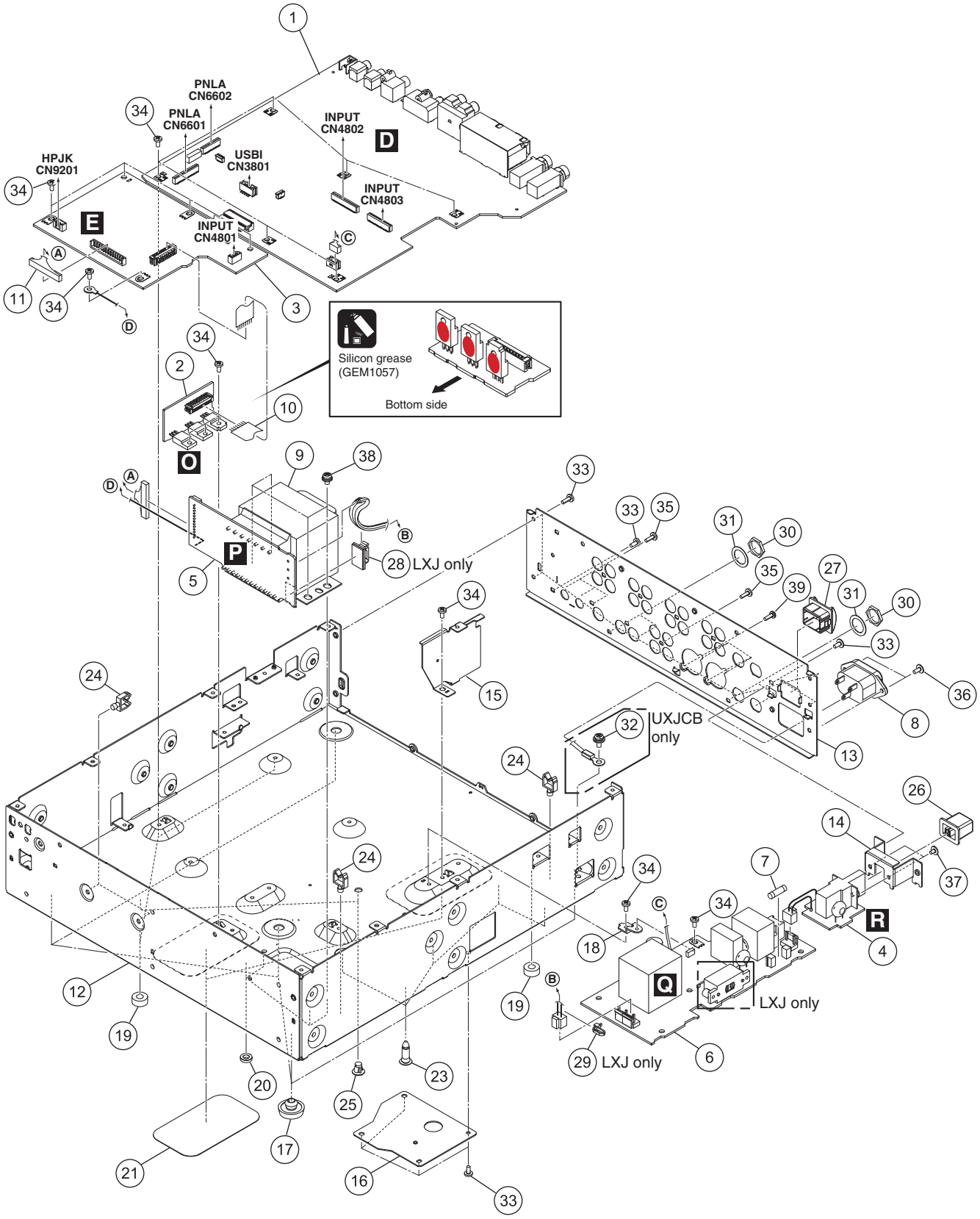

(1) BOTTOM SECTION PARTS LIST

Mark	No.	Description	Part No.
	1	MAIN Assy	DWX3430
	2	REG Assy	DWR1528
	3	SEC/HP Assy	DWR1529
	4	ACSW Assy	DWR1532
	5	PRIMARY Assy	See Contrast table (2)
	6	TRANS Assy	See Contrast table (2)
⚠	7	Fuse (T630 mA)	AEK1052
⚠	8	AC Inlet	See Contrast table (2)
⚠	9	Transformer	See Contrast table (2)
	10	Jumper Wire	D20PYY1010E
	11	Connector Assy	PF13EE-S17
NSP	12	Chassis/750	DNA1453
	13	Rear Panel	See Contrast table (2)
	14	Bracket PSW	DNF1759
	15	Shield Plate/PW	DNF1906
NSP	16	Plate	DNK6124
	17	Foot (Rubber)	REC-434
NSP	18	PCB Stay (FE)	VNE2489
NSP	19	Spacer	AEB7092
	20	Spacer	DEB1998
	21	Sheet/BOT	DEC3404
	22	•••••	
	23	PCB Holder	PNW2029
	24	Holder	VEC1355
NSP	25	PC Support	VEC1749
	26	Power Knob	DAC2306
	27	Power Knob Guard	DNK4534
	28	Locking Wire Saddle	See Contrast table (2)
	29	Binder	See Contrast table (2)
	30	Nut (M12)	NKX2FNI
	31	Washer	DEC2920
	32	Screw	See Contrast table (2)
	33	Screw	BBZ30P060FTB
	34	Screw	BBZ30P060FTC
	35	Screw	BPZ30P080FTB
	36	Screw	IBZ30P080FTB
	37	Screw	IMZ30P040FTC
	38	Screw	PMB40P060FTB
	39	Screw	PPZ30P080FTB

(2) CONTRAST TABLE

DJM-750-K/SYXJ8, UXJCB, LXJ, KXJ5, XJCN5, DJM-750-S/SYXJ8, UXJCB, LXJ, KXJ5 and XJCN5 are constructed the same except for the following:

Mark	No.	Symbol and Description	DJM-750-K /SYXJ8	DJM-750-K /UXJCB	DJM-750-K /LXJ	DJM-750-K /KXJ5	DJM-750-K /XJCN5
	5	PRIMARY Assy	DWR1535	DWR1537	DWR1530	DWR1535	DWR1535
	6	TRANS Assy	DWR1536	DWR1538	DWR1531	DWR1536	DWR1536
⚠	8	AC Inlet/3P	Not used	DKP3915	Not used	Not used	Not used
⚠	8	AC Inlet/2P	DKP3916	Not used	DKP3916	DKP3916	DKP3916
⚠	9	Transformer	DTT1256	DTT1257	DTT1256	DTT1256	DTT1256
	13	Rear Panel	DNC2101	DNC2102	DNC2103	DNC2106	DNC2105
	28	Locking Wire Saddle	Not used	Not used	DEC3439	Not used	Not used
	29	Binder	Not used	Not used	ZCA-SKB90BK	Not used	Not used
	32	Screw	Not used	PMH40P080FTC	Not used	Not used	Not used

Mark	No.	Symbol and Description	DJM-750-S /SYXJ8	DJM-750-S /UXJCB	DJM-750-S /LXJ	DJM-750-S /KXJ5	DJM-750-S /XJCN5
	5	PRIMARY Assy	DWR1535	DWR1537	DWR1530	DWR1535	DWR1535
	6	TRANS Assy	DWR1536	DWR1538	DWR1531	DWR1536	DWR1536
⚠	8	AC Inlet/3P	Not used	DKP3915	Not used	Not used	Not used
⚠	8	AC Inlet/2P	DKP3916	Not used	DKP3916	DKP3916	DKP3916
⚠	9	Transformer	DTT1256	DTT1257	DTT1256	DTT1256	DTT1256
	13	Rear Panel	DNC2101	DNC2102	DNC2103	DNC2106	DNC2105
	28	Locking Wire Saddle	Not used	Not used	DEC3439	Not used	Not used
	29	Binder	Not used	Not used	ZCA-SKB90BK	Not used	Not used
	32	Screw	Not used	PMH40P080FTC	Not used	Not used	Not used

9.4 CONTROL PANEL SECTION (1/2)

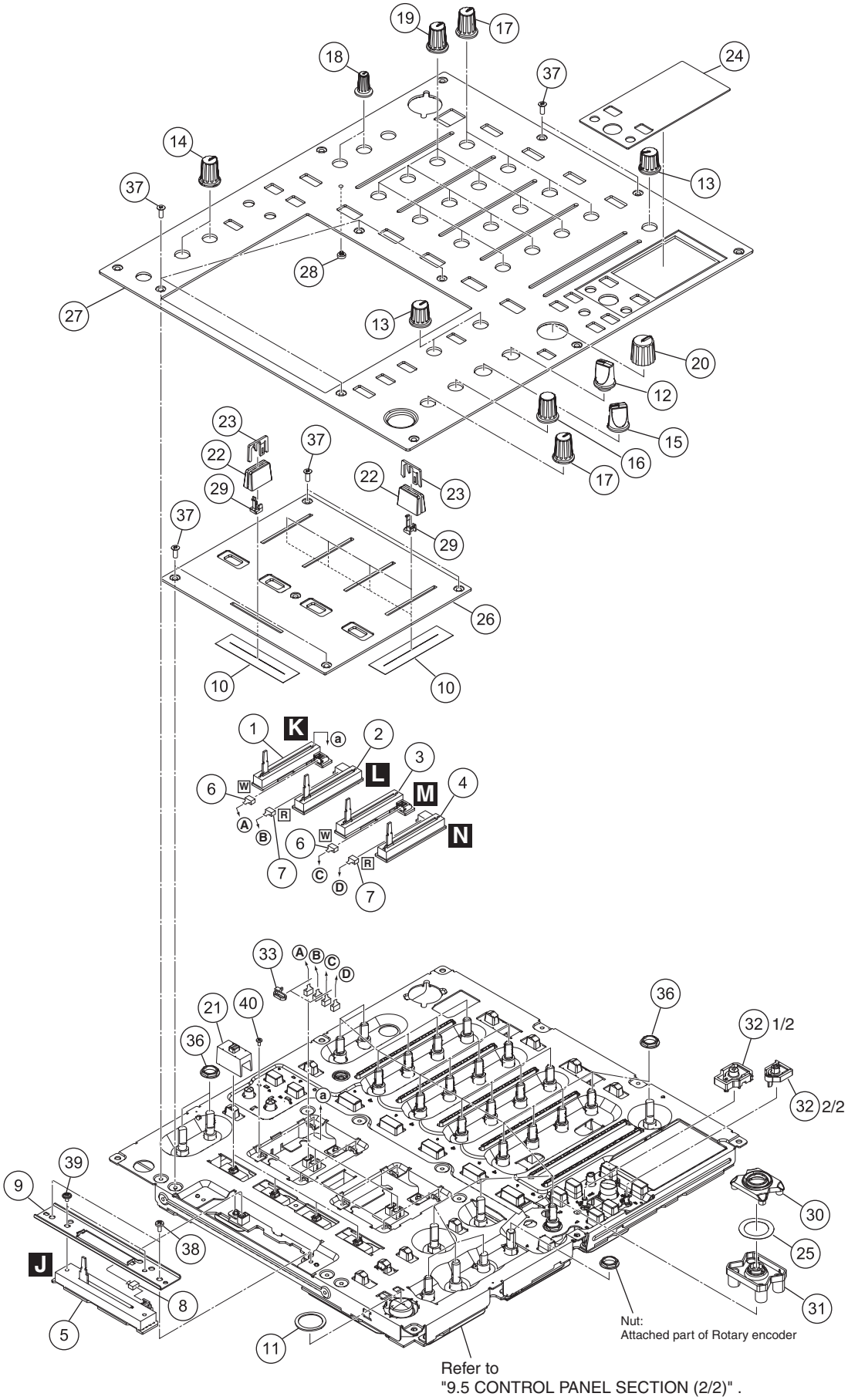

(1) CONTROL PANEL SECTION (1/2) PARTS LIST

Mark	No.	Description	Part No.
	1	FAD1 Assy	DWX3434
	2	FAD2 Assy	DWX3435
	3	FAD3 Assy	DWX3436
	4	FAD4 Assy	DWX3437
	5	FADC Assy	DWX3438
	6	Connector Assy	PF03PP-B05
	7	Connector Assy	PF03PP2B05
	8	Connector Assy	PF03PP6B07
	9	CRF Stay	DNF1870
	10	Fader Packing	DEC2903
	11	SW Packing (EF)	DEC2929
	12	Select Knob	DAA1205
	13	Knob (MA)	DAA1210
	14	Knob (Black)	DAA1212
	15	FX SEL Knob	DAA1213
	16	Knob (TIME)	DAA1214
	17	Rotary Knob (BN)	DAA1220
	18	Knob/MIC	DAA1301
	19	Knob/RSW	DAA1306
	20	Knob/FRE	DAA1309
	21	Slide SW Cap (W)	DAC2401
	22	Slider Knob 1	DAC2684
	23	Slider Knob 2	DAC2685
	24	Panel/FL	DAH2936
	25	Ring	DEC3479
	26	Panel/FD	See Contrast table (2)
	27	Control Panel	See Contrast table (2)
	28	Lens	DNK4532
	29	Slider Knob Stopper	DNK5888
	30	Lens	DNK6231
	31	Reflector	DNK6232
	32	Button Assy/UTY	DXB2138
	33	Binder	ZCA-SKB90BK
	34	•••••	
	35	•••••	
	36	Flange Nut M9	DBN1008
	37	Screw (FE)	See Contrast table (2)
	38	Screw	BBZ30P060FTC
	39	Screw	IMZ30P040FTC
	40	Screw	PMA20P040FTC

(2) CONTRAST TABLE

DJM-750-K/SYXJ8, UXJCB, LXJ, KXJ5, XJCN5, DJM-750-S/SYXJ8, UXJCB, LXJ, KXJ5 and XJCN5 are constructed the same except for the following:

Mark	No.	Symbol and Description	DJM-750-K /SYXJ8	DJM-750-K /UXJCB	DJM-750-K /LXJ	DJM-750-K /KXJ5	DJM-750-K /XJCN5
	26	Panel/FD	DNB1216	DNB1216	DNB1216	DNB1216	DNB1216
	27	Control Panel	DNB1218	DNB1218	DNB1218	DNB1218	DNB1218
	37	Screw (FE)	DBA1290	DBA1290	DBA1290	DBA1290	DBA1290

Mark	No.	Symbol and Description	DJM-750-S /SYXJ8	DJM-750-S /UXJCB	DJM-750-S /LXJ	DJM-750-S /KXJ5	DJM-750-S /XJCN5
	26	Panel/FD	DNB1217	DNB1217	DNB1217	DNB1217	DNB1217
	27	Control Panel	DNB1219	DNB1219	DNB1219	DNB1219	DNB1219
	37	Screw (FE)	DBA1436	DBA1436	DBA1436	DBA1436	DBA1436

9.5 CONTROL PANEL SECTION (2/2)

• Bottom view

Note:
Refer to “7. DISASSEMBLY” for styling of flexible cables, barriers.

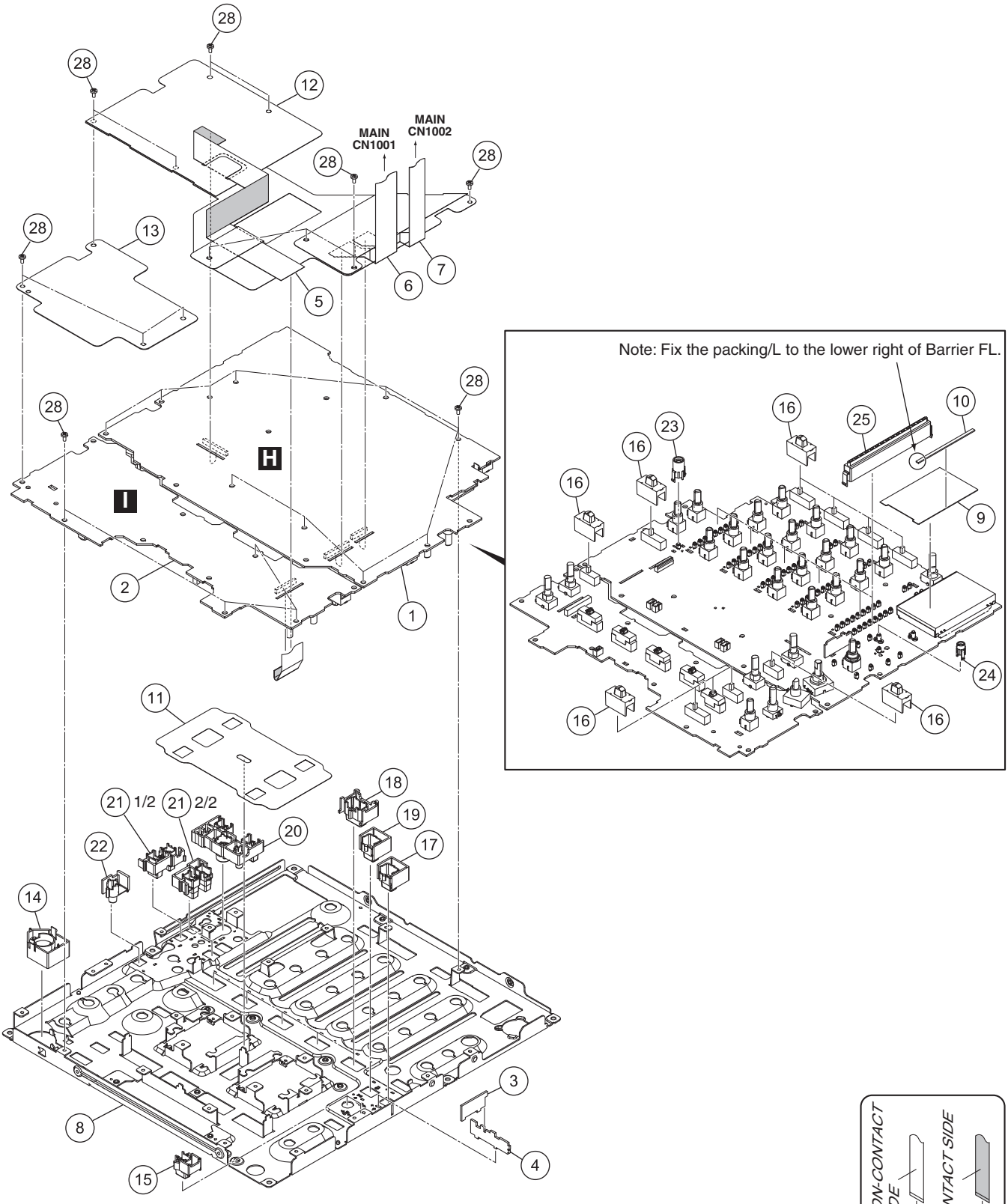

CONTROL PANEL SECTION (2/2) PARTS LIST

Mark	No.	Description	Part No.
	1	PNLA Assy	DWX3439
	2	PNLB Assy	DWX3440
	3	SHADE1 Assy	DWX3479
	4	SHADE2 Assy	DWX3483
	5	FFC/27P	DDD1601
	6	FFC/24P	DDD1628
	7	FFC/17P	DDD1629
	8	Stay/PNL	DND1275
	9	Barrier FL	DEC3351
	10	Packing/L	DEC3416
	11	Barrier/CHF	DMR1017
	12	Barrier/PNL	DMR1018
	13	Barrier/A	DMR1019
	14	Effect Knob	DAC2304
	15	Button (FL)	DAC2398
	16	Slide SW Cap	DAC2400
	17	MIC Knob	DAC2522
	18	Button/CUE	DAC2873
	19	Button/BLK	DAC2920
	20	Button/TAP	DAC2921
	21	Button/CFX	DAC2923
	22	Button/CUE	DAC2925
	23	Lens Holder	DNK4533
	24	Holder/LED	DNK6230
	25	Lebel Meter Assy	DXB1882
	26	•••••	
	27	•••••	
	28	Screw	BBZ30P060FTC