Pioneer *sound.vision.soul*

Service Manual

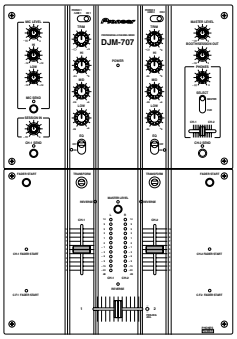

DJM-707

ORDER NO.
RRV2872

DJ MIXER

DJM-707

THIS MANUAL IS APPLICABLE TO THE FOLLOWING MODEL(S) AND TYPE(S).

Model	Type	Power Requirement	Remarks
DJM-707	KUCXJ	AC120V	
DJM-707	WYXJ	AC220 - 240V	
DJM-707	TLTXJ	AC110 - 240V	
DJM-707	NKXJ	AC220V	



For details, refer to "Important symbols for good services" .

PIONEER CORPORATION 4-1, Meguro 1-chome, Meguro-ku, Tokyo 153-8654, Japan
PIONEER ELECTRONICS (USA) INC. P.O. Box 1760, Long Beach, CA 90801-1760, U.S.A.
PIONEER EUROPE NV Haven 1087, Keetberglaan 1, 9120 Melsele, Belgium
PIONEER ELECTRONICS ASIACENTRE PTE. LTD. 253 Alexandra Road, #04-01, Singapore 159936
ⓒ**PIONEER CORPORATION 2004**

T-ZZY JAN. 2004 printed in Japan

SAFETY INFORMATION

This service manual is intended for qualified service technicians ; it is not meant for the casual do-it-yourselfer. Qualified technicians have the necessary test equipment and tools, and have been trained to properly and safely repair complex products such as those covered by this manual.
Improperly performed repairs can adversely affect the safety and reliability of the product and may void the warranty. If you are not qualified to perform the repair of this product properly and safely, you should not risk trying to do so and refer the repair to a qualified service technician.

WARNING
This product contains lead in solder and certain electrical parts contain chemicals which are known to the state of California to cause cancer, birth defects or other reproductive harm.

Health & Safety Code Section 25249.6 – Proposition 65

(FOR USA MODEL ONLY)

1. SAFETY PRECAUTIONS

The following check should be performed for the continued protection of the customer and service technician.

LEAKAGE CURRENT CHECK

Measure leakage current to a known earth ground (water pipe, conduit, etc.) by connecting a leakage current tester such as Simpson Model 229-2 or equivalent between the earth ground and all exposed metal parts of the appliance (input/output terminals, screwheads, metal overlays, control shaft, etc.). Plug the AC line cord of the appliance directly into a 120V AC 60Hz outlet and turn the AC power switch on. Any current measured must not exceed 0.5mA.

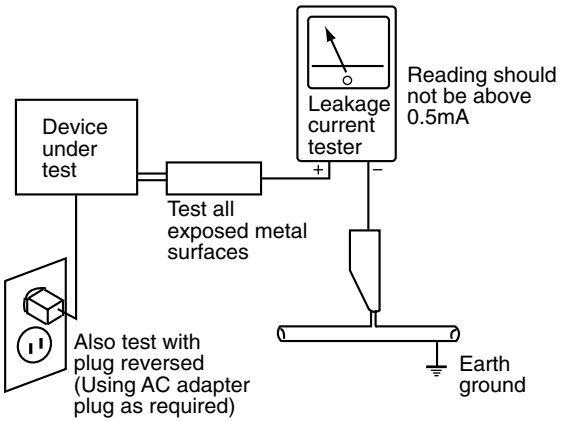

AC Leakage Test

ANY MEASUREMENTS NOT WITHIN THE LIMITS OUTLINED ABOVE ARE INDICATIVE OF A POTENTIAL SHOCK HAZARD AND MUST BE CORRECTED BEFORE RETURNING THE APPLIANCE TO THE CUSTOMER.

2. PRODUCT SAFETY NOTICE

Many electrical and mechanical parts in the appliance have special safety related characteristics. These are often not evident from visual inspection nor the protection afforded by them necessarily can be obtained by using replacement components rated for voltage, wattage, etc. Replacement parts which have these special safety characteristics are identified in this Service Manual.

Electrical components having such features are identified by marking with a ⚠ on the schematics and on the parts list in this Service Manual.

The use of a substitute replacement component which does not have the same safety characteristics as the PIONEER recommended replacement one, shown in the parts list in this Service Manual, may create shock, fire, or other hazards.

Product Safety is continuously under review and new instructions are issued from time to time. For the latest information, always consult the current PIONEER Service Manual. A subscription to, or additional copies of, PIONEER Service Manual may be obtained at a nominal charge from PIONEER.

[Important symbols for good services]
In this manual, the symbols shown-below indicate that adjustments, settings or cleaning should be made securely.
When you find the procedures bearing any of the symbols, be sure to fulfill them:

1. Product safety



You should conform to the regulations governing the product (safety, radio and noise, and other regulations), and should keep the safety during servicing by following the safety instructions described in this manual.

2. Adjustments



To keep the original performances of the product, optimum adjustments or specification confirmation is indispensable. In accordance with the procedures or instructions described in this manual, adjustments should be performed.

3. Cleaning



For optical pickups, tape-deck heads, lenses and mirrors used in projection monitors, and other parts requiring cleaning, proper cleaning should be performed to restore their performances.

4. Shipping mode and shipping screws



To protect the product from damages or failures that may be caused during transit, the shipping mode should be set or the shipping screws should be installed before shipping out in accordance with this manual, if necessary.

5. Lubricants, glues, and replacement parts



Appropriately applying grease or glue can maintain the product performances. But improper lubrication or applying glue may lead to failures or troubles in the product. By following the instructions in this manual, be sure to apply the prescribed grease or glue to proper portions by the appropriate amount.For replacement parts or tools, the prescribed ones should be used.

CONTENTS

1. SPECIFICATIONS 5
2. EXPLODED VIEWS AND PARTS LIST 6
   2.1 PACKING 6
   2.2 EXTERIOR SECTION 8
   2.3 CONTROL PANEL (LOWER) SECTION 10
   2.4 CONTROL PANEL (UPPER) SECTION 12
   2.5 FRONT PANEL SECTION 14
3. BLOCK DIAGRAM AND SCHEMATIC DIAGRM 16
   3.1 OVERALL BLOCK DIAGRAM 16
   3.2 OVERALL CONNECTION DIAGRAM 18
   3.3 MAIN ASSY (1/6) 20
   3.4 MAIN ASSY (2/6) 22
   3.5 MAIN ASSY (3/6) 24
   3.6 MAIN ASSY (4/6) 26
   3.7 MAIN ASSY (5/6) 28
   3.8 MAIN ASSY (6/6) 30
   3.9 CONT ASSY 32
   3.10 C1EQ ASSY 34
   3.11 C1EQ ASSY (2/2) 36
   3.12 C2EQ ASSY 38
   3.13 C1BF ASSY 40
   3.14 C2BF ASSY 42
   3.15 MICB ASSY 44
   3.16 HPBO ASSY 46
   3.17 FDVR ASSY 48
   3.18 SDRT ASSY 50
   3.19 XLR ASSY (1/2) 52
   3.20 XLR ASSY (2/2) 54

3.21 LVMR (1/2), C1TR, C2TR, FVA1 and FVA2 ASSYS 56
3.22 LVMR ASSY (2/2) 58
3.23 CFVR, RVSW and FSSW ASSYS 60
3.24 SW POWER SUPPLAY ASSY 62
3.25 VOLTAGES 63
3.26 WAVEFORMS 66
4. PCB CONNECTION DIAGRAM 70
4.1 MAIN ASSY 70
4.2 CONT ASSY 74
4.3 C1 EQ ASSY 76
4.4 C2 EQ ASSY 78
4.5 C1BF ASSY 80
4.6 C2BF ASSY 81
4.7 MICB ASSY 82
4.8 HPBO ASSY 83
4.9 LVMR, C1TR, C2TR, FVA1,FVA2 and FDVR ASSYS 84
4.10 SDRT ASSY 88
4.11 XLR ASSY 89
4.12 CFVR, RVSW and FSSW ASSYS 90
4.13 SW POWER SUPPLY ASSY 92
5. PCB PARTS LIST 94
6. ADJUSTMENT 100
6.1 ADJUSTMENT REQUIRED WHEN THE SET IS REPAIRED OR REPLACED 100
6.2 CH1 OFFSET ADJUSTMENT 102
6.3 CH1GAIN ADJUSTMENT 103
6.4 CH2 OFFSET ADJUSTMENT 104
6.5 CH2 GAIN ADJUSTMENT 105
6.6 CH1 EQ Low ADJUSTMENT 106
6.7 CH1 EQ Mid ADJUSTMENT 107
6.8 CH1 EQ Hi ADJUSTMENT 108
6.9 CH2 EQ Low ADJUSTMENT 109
6.10 CH2 EQ Mid ADJUSTMENT 110
6.11 CH2 EQ Hi ADJUSTMENT 111
7. GENERAL INFORMATIN 112
7.1 DIAGNOSIS 112
7.1.1 SERVICE MODE 112
7.1.2 Rewriting of the Software 114
7.1.3 POWER ON SEQUENCE 116
7.1.4 DISASSEMBLY 117
7.1.5 CONFIGURATION OF THE PC BOARD 121
7.2 PARTS 122
7.2.1 IC INFORMATION 122
8. PANEL FACILITIES AND SPECIFICATIONS 125

1. SPECIFICATIONS

Audio Section

Input terminal (input level/impedance)

CD 1, 2 ..... -14 dBV (200 mV) / 22 kΩ
LINE 1, 2 ..... -14 dBV (200 mV) / 47 kΩ
PHONO 1, 2 ..... -54 dBV (2 mV) / 47 kΩ
MIC ..... -54 dBV (2 mV) / 3 kΩ
SESSION IN ..... -14 dBV (200 mV) / 22 kΩ
RETURN ..... -14 dBV (200 mV) / 22 kΩ

Output terminal (output level/impedance)

MASTER OUT 1 (XLR) ..... 0 dBV (1 V) / 600 Ω
MASTER OUT 2 (RCA) ..... 0 dBV (1 V) / 1 kΩ
BOOTH / SESSION OUT ..... 0 dBV (1 V) / 1 kΩ
SEND ..... -14 dBV (200 mV) / 1 kΩ
PHONES ..... 6 dBV (2 V) / 22Ω or less
(Rated load impedance 32 Ω)

Frequency characteristics

CD, LINE, MIC ..... 20 Hz to 20 kHz
PHONO (RIAA) ..... 20 Hz to 20 kHz

SN ratio

CD, LINE ..... 93 dB or more
PHONO..... 78 dB or more
MIC ..... 64 dB or more

Total harmonic distortion rate

CD, LINE ..... 0.02% or less
Cross talk (1 kHz) ..... 77 dB or more

Channel equalizer (CD, LINE/PHONO)

HI ..... +6 dB to -26 dB
MID..... +6 dB to -26 dB
LOW..... +6 dB to -26 dB

Microphone equalizer (MIC)

HI ..... +12 dB to -12 dB
LOW ..... +12 dB to -12 dB

■ KUCXJ type

Electrical Section, etc.

Power supply voltage ..... AC 120 V, 60 Hz
Power consumption ..... 23 W
Operating temperature ..... +5° C to +35° C (41° F to 95° F)
Operating humidity ..... 5% to 85%
External dimensions ..... 251 (W) x 381.6 (D) x 107.9 (H) mm
9-7/8 (W) x 15 (D) x 4-1/4 (H) in
Weight ..... 6.3 kg
13 lbs 14 oz

Accessories

● Hexagonal Allen driver 1
● These operating instructions..... 1
● Warranty Card..... 1

For improvement purposes, specifications and design may be subject to modification without notice.

■ WYXJ type

Electrical Section, etc.

Power supply voltage ..... AC 220-240 V, 50/60 Hz
Power consumption ..... 23 W
Operating temperature ..... +5°C to +35°C
Operating humidity ..... 5% to 85%
External dimensions ..... 251 (W) x 381.6 (D) x 107.9 (H) mm
Weight ..... 6.3 kg

Accessories

● Hexagonal Allen driver 1
● These operating instructions..... 1

For improvement purposes, specifications and design may be subject to modification without notice.

■ TLTXJ type

Electrical Section, etc.

Power supply voltage ..... AC 110-240 V,50/60 Hz
Power consumption ..... 23 W
Operating temperature ..... +5°C to +35°C
Operating humidity 5%to 85%
External dimensions ..... 251 (W)x 381.6 (D)x 107.9 (H)mm
Weight ..... 6.3 kg

Accessories

● Hexagonal Allen driver 1
● These operating instructions..... 1

For improvement purposes,specifications and design may be subject to modification without notice.

Accessories

● Hexagonal Allen driver.....x1
(DEX1018)

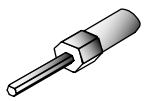

● Operating instructions..... x1
● Warranty Card..... x1
(KUCXJ type)

2. EXPLODED VIEWS AND PARTS LIST

NOTES:
- *Parts marked by "NSP" are generally unavailable because they are not in our Master Spare Parts List.*
- *The ⚠ mark found on some component parts indicates the importance of the safety factor of the part. Therefore, when replacing, be sure to use parts of identical designation.*
- *Screws adjacent to ▼ mark on product are used for disassembly.*
- *For the applying amount of lubricants or glue, follow the instructions in this manual. (In the case of no amount instructions, apply as you think it appropriate.)*

2.1 PACKING

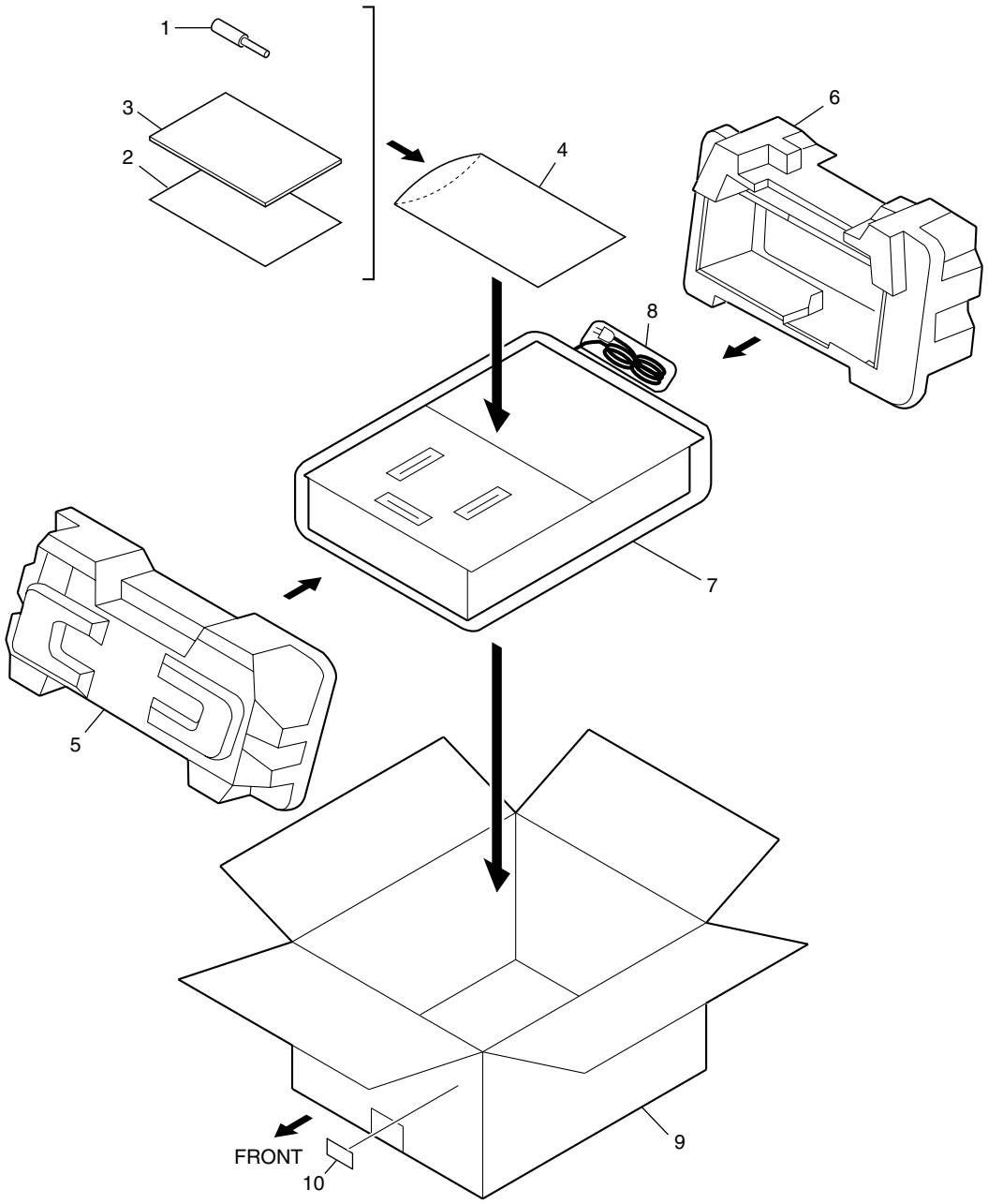

PACKING

Mark	No.	Description	Part No.
	1	Hexagon Screwdriver	DEX1018
NSP	2	Warranty Card	See Contrast table(2)
	3	Operating Instructions	See Contrast table(2)
NSP	4	Polyethylene Bag (0.03 x 230 x 340)	Z21-038
NSP	5	Pad (A)	DHA1586
	6	Pad (B)	DHA1587
	7	Sheet	RHX1006
	8	Polyethylene Bag	VHL1051
	9	Packing Case	See Contrast table(2)
NSP	10	Label	VRW1629

(2) CONTRAST TABLE

DJM-707/ KUCXJ, DJM-707/ WYXJ, DJM-707/ TLTXJ and DJM-707/NKXJ are constructed the same except for the following :

Mark	No.	Symbol and Description	DJM-707 KUCXJ	DJM-707 WYXJ	DJM-707 TLTXJ	DJM-707 NKXJ
NSP	2	Warranty Card	ARY7043	Not used	Not used	Not used
	3	Operating Instructions (English)	DRB1353	Not used	Not used	Not used
	3	Operating Instructions (English/ French/ German/ Italian/ Duch/ Spanish)	Not used	DRB1354	Not used	Not used
	3	Operating Instructions (English/ Spanish/ Chinese)	Not used	Not used	DRB1355	Not used
	3	Operating Instructions (Korea)	Not used	Not used	Not used	DRB1356
	9	Packing Case	DHG2445	DHG2444	DHG2446	DHG2448

2.2 EXTERIOR SECTION

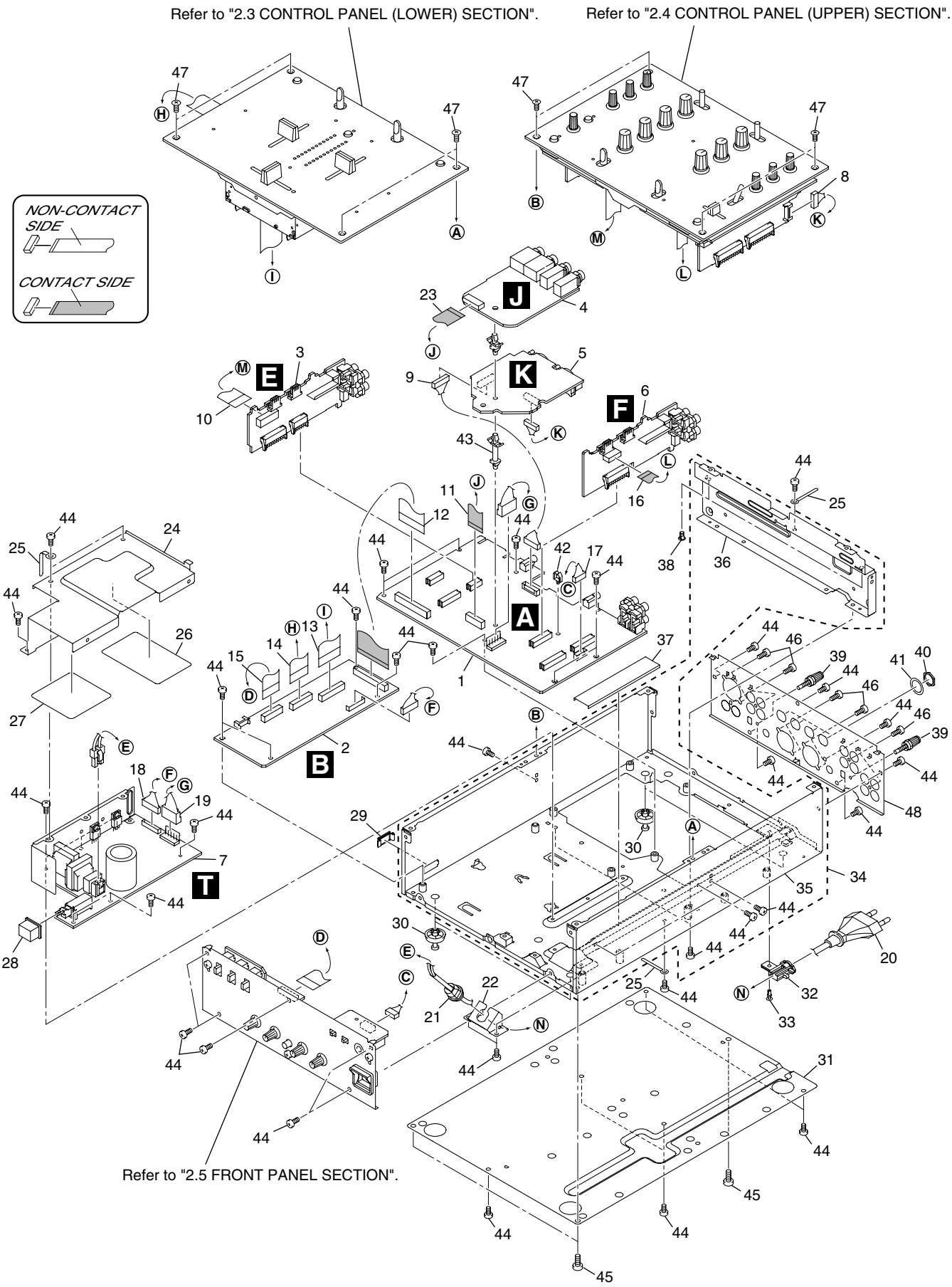

EXTERIOR SECTION Parts List

Mark	No.	Description	Part No.
	1	MAIN Assy	DWX2338
	2	CONT Assy	DWX2335
	3	C1BF Assy	DWS1338
	4	SDRT Assy	DWX2321
	5	XLR Assy	DWX2322
	6	C2BF Assy	DWS1339
⚠	7	SW POWER SUPPLY	DWR1377
	8	Connector Assy (8P)	DKP3660
	9	Connector Assy (9P)	DKP3662
	10	Flexible Cable (17P)	DDD1234
	11	Flexible Cable (15P)	DDD1243
	12	Flexible Cable (33P)	DDD1247
	13	Flexible Cable (23P)	DDD1239
	14	Flexible Cable (19P)	DDD1238
	15	Flexible Cable (17P)	DDD1246
	16	Flexible Cable (11P)	DDD1245
	17	Connector Assy (6P)	DKP3661
	18	Connector Assy	PF08EE-D17
	19	Connector Assy (5P)	DKP3659
⚠	20	AC Power Cord	See Contrast table(2)
	21	Strain Relief	See Contrast table(2)
	22	Cord Stopper Stay	DNH2576
	23	Locking Card Spacer	PNW2917
NSP	24	Shield Case	DNH2572
NSP	25	Cord Stopper	ZCB-069Z
	26	Shield Sheet B	DEC2570
	27	Shield Sheet C	DEC2584
	28	Power Knob	DAC2133
	29	Blind Cap	DNK4218
	30	Foot	REC-434
NSP	31	Bottom Plate	DNH2570
	32	Cord Cover	DNK4197
	33	Rivet	RBM-003
	34	Chassis (7) Assy	DXB1816
NSP	35	Chassis (7)	DNA1297
NSP	36	Partition Plate	DNH2573
	37	Shield Sheet A	DEC2569
	38	Card Spacer	DNK2769
	39	Terminal Screw	AKE-031
	40	Nut	NKX2FUC
	41	Washer	DBE1010
	42	Mini Clamp	DEC2588
NSP	43	PC Support	VEC1584
	44	Screw	BBZ30P060FZK
	45	Screw	BBZ40P120FMC
	46	Screw	BPZ30P080FMC
	47	Screw	CMZ30P100FZK
NSP	48	Rear Panel	See Contrast table(2)

(2) CONTRAST TABLE

DJM-707/ KUCXJ, DJM-707/ WYXJ, DJM-707/ TLTXJ and DJM-707/NKXJ are constructed the same except for the following :

Mark	No.	Symbol and Description	DJM-707 KUCXJ	DJM-707 WYXJ	DJM-707 TLTXJ	DJM-707 NKXJ
⚠	20	AC Power Cord	VDG1075	VDG1077	VDG1077	VDG1096
⚠	21	Strain Relief	CM-22C	CM-22B	CM-22B	CM-22C
NSP	48	Rear Panel	DNC1662	DNC1661	DNC1663	DNC1665

2.3 CONTROL PANEL (LOWER) SECTION

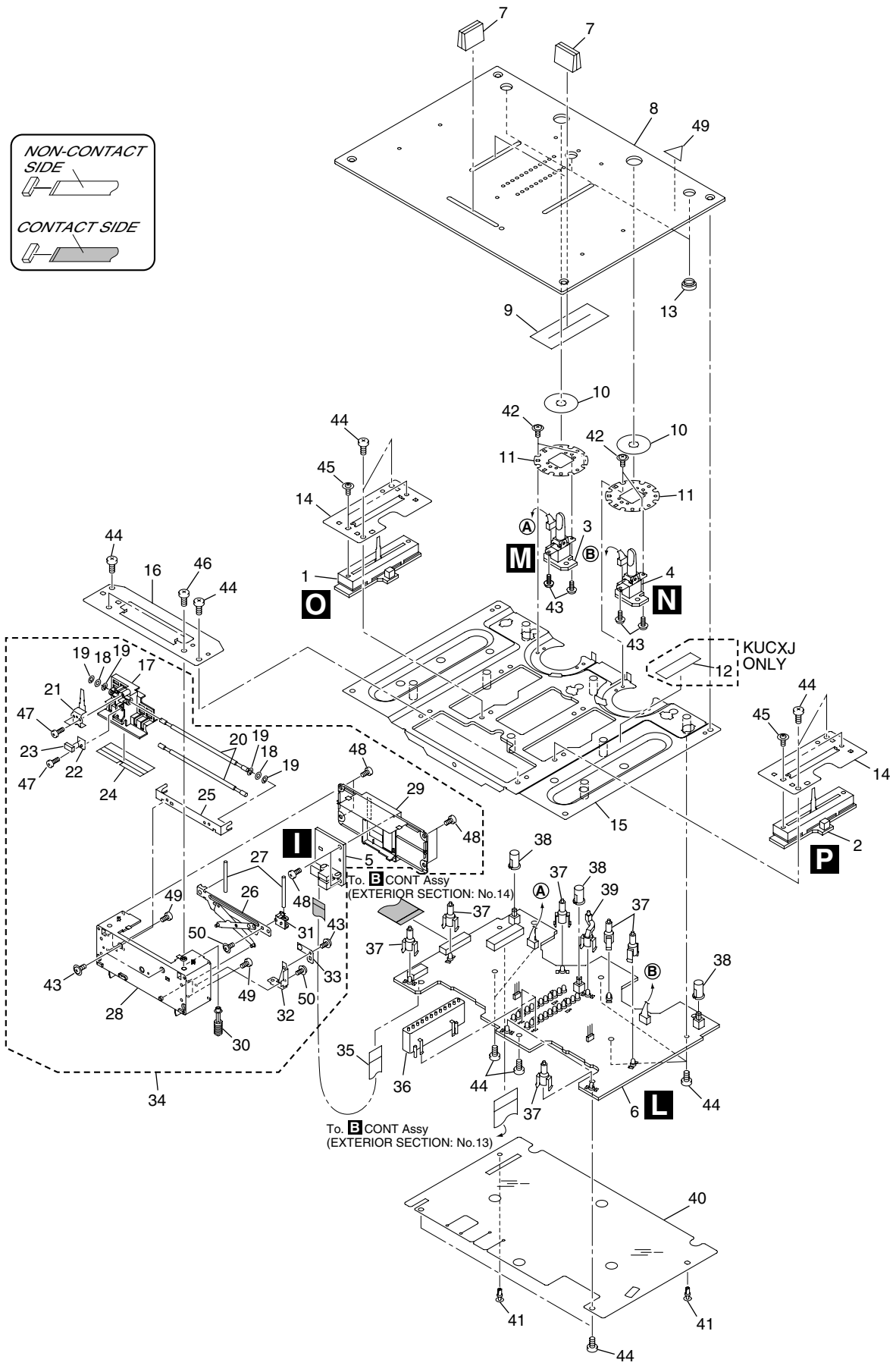

CONTROL PANEL (LOWER) SECTION Parts List

Mark	No.	Description	Part No.
	1	FVA1 Assy	DWX2323
	2	FVA2 Assy	DWX2324
	3	C1TR Assy	DWS1334
	4	C2TR Assy	DWS1335
	5	FDVR Assy	DWX2320
	6	LVMR Assy	DWS1330
	7	Slider Knob (L)	DNK4210
	8	Control Panel (D7)	DNB1124
	9	Fader Packing (A)	DEC2571
	10	SW Packing (A)	DEC2573
	11	Transform Panel	DNF1682
	12	65 Label (S)	See Contrast table (2)
	13	Push SW Guide	DNK4208
	14	CH Fader Bracket	DNF1683
NSP	15	Panel Stay D Assy	DXB1787
	16	CR Fader Bracket	DNF1684
	17	Slider Base	DNK4192
	18	O Ring (2.8)	DEB1618
	19	Washer	WT28D060D025
	20	Guide Shaft	DLA1966
	21	Lever Plate	DNH2564
	22	Yoke	DNH2569
	23	Fader Magnet	DMG1010
	24	Encoder Plate S	DEC2568
	25	Stopper S	DNH2578
	26	MG Plate Assy	DXA1968
	27	MG Shaft	DLA1947
	28	Case A	DNK4193
	29	Case B	DNK4194
	30	Worm Gear S	DNK4195
	31	Rack Gear S	DNK4196
	32	WG Holder	DNF1681
	33	WG Spring	DBK1245
	34	Cross Fader Assy-S	DXX2535
	35	Flexible Cable (9P)	DDD1240
	36	Level Meter Holder	DNK4214
	37	LED Lens (C)	DNK4217
	38	Push SW Knob (B)	DNK4207
	39	LED Lens (B)	DNK4216
	40	Shield Sheet (F)	DEC2591
	41	Rivet	RBM-003
	42	Screw	AMZ26P040FMC
	43	Screw	AMZ20P040FMC
	44	Screw	BBZ30P060FZK
	45	Thin Head Screw	DBA1198
	46	Screw	BPZ30P080FMC
	47	Screw	BPZ20P060FMC
	48	Screw	BPZ20P050FMC
NSP	49	Caution Label	See Contrast table (2)

(2) CONTRAST TABLE

DJM-707/ KUCXJ, DJM-707/ WYXJ, DJM-707/ TLTXJ and DJM-707/NKXJ are constructed the same except for the following :

Mark	No.	Symbol and Description	DJM-707 KUCXJ	DJM-707 WYXJ	DJM-707 TLTXJ	DJM-707 NKXJ
	12	65 Label (S)	DRW2164	Not used	Not used	Not used
NSP	49	Caution Label	DRW1975	Not used	Not used	Not used

2.4 CONTROL PANEL (UPPER) SECTION

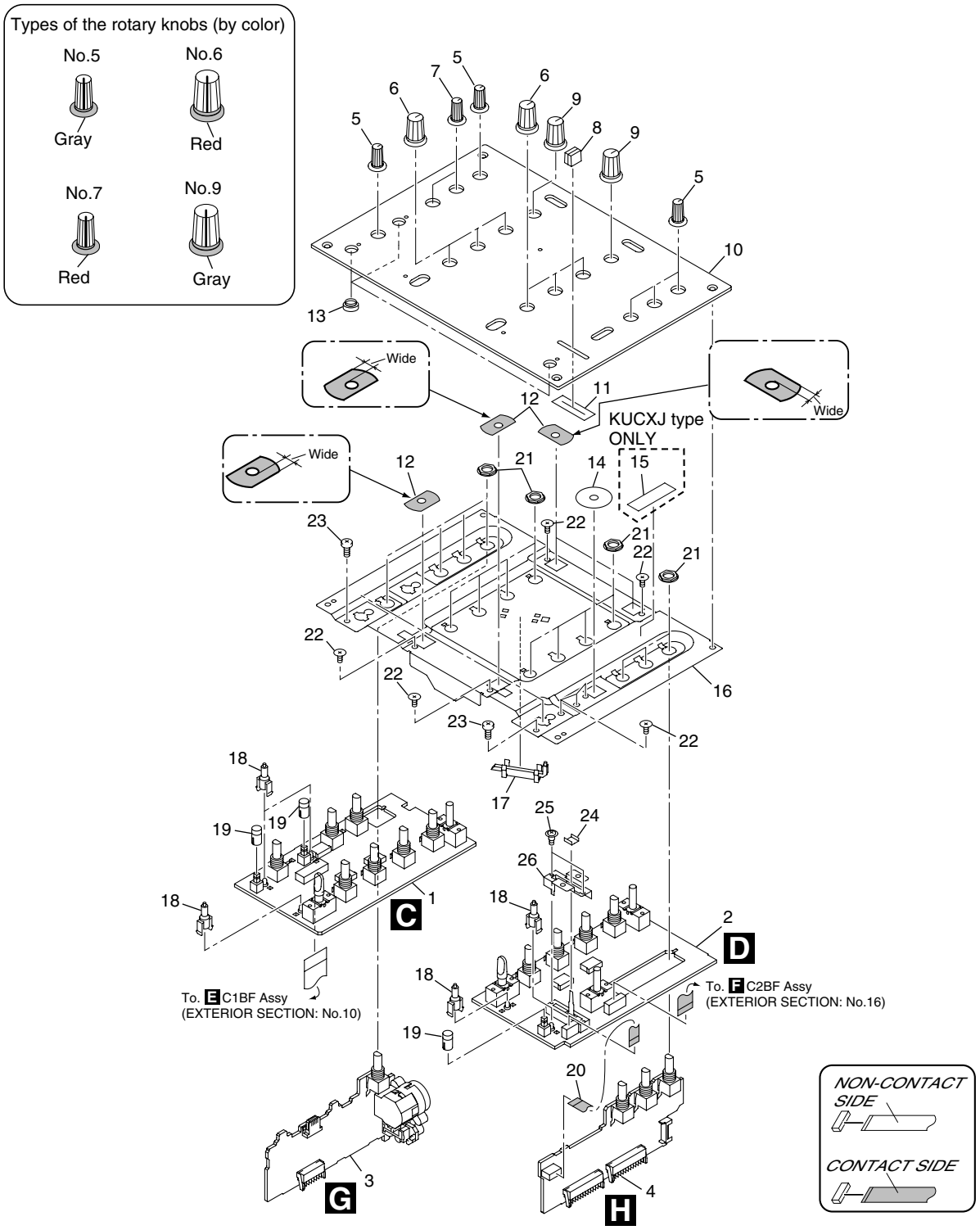

CONTROL PANEL (UPPER) Parts List

Mark	No.	Description	Part No.
	1	C1EQ Assy	DWS1336
	2	C2EQ Assy	DWS1337
	3	MICB Assy	DWX2363
	4	HPBO Assy	DWX2319
	5	Rotary Knob (Small: Red)	DNK4203
	6	Rotary Knob (Large: Red)	DNK4202
	7	Rotary Knob (Small Red)	DNK4204
	8	Slider Knob (L)	DNK4211
	9	Rotary Knob (Large: Glay)	DNK4201
	10	Control Panel (U7)	DNB1123
	11	Fader Packing (B)	DEC2572
	12	SW Packing (D)	DEC2580
	13	Push SW Guide	DNK4208
	14	SW Packing (A)	DEC2573
	15	65 Label (S)	See Contrast table(2)
NSP	16	Panel Stay (U7)	DND1249
	17	LED Lens (E)	DNK4227
	18	LED Lens (A)	DNK4215
	19	Push SW Knob (A)	DNK4206
	20	Flexible Cable (7P)	DDD1244
	21	Flange Nut M9	DBN1004
	22	Screw	CMZ26P050FZK
	23	Screw	BBZ30P060FZK
	24	Cue Earth Plate	DBK1252
	25	Screw	DBA1141
	26	Cue Fader Bracket	DNF1690

(2) CONTRAST TABLE

DJM-707/ KUCXJ, DJM-707/ WYXJ and DJM-707/ TLTXJ and DJM-707/NKXJ are constructed the same except for the following :

Mark	No.	Symbol and Description	DJM-707 KUCXJ	DJM-707 WYXJ	DJM-707 TLTXJ	DJM-707 NKXJ
	15	65 Label (S)	DRW2164	Not used	Not used	Not used

2.5 FRONT PANEL SECTION

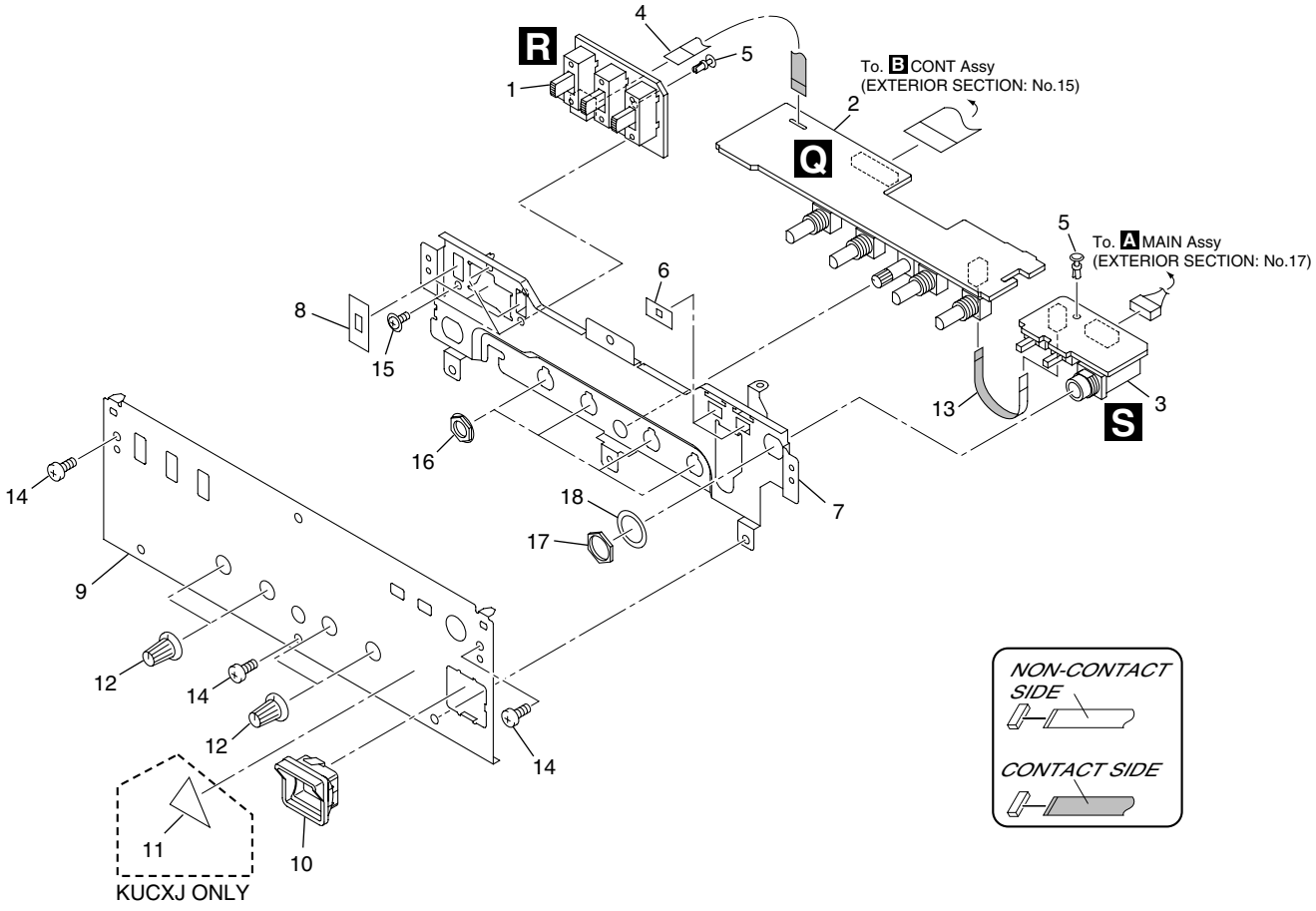

FRONT PANEL Parts List

Mark	No.	Description	Part No.
	1	RVSW Assy	DWS1332
	2	CFVR Assy	DWS1341
	3	FSSW Assy	DWS1333
	4	Flexible Cable (6P)	DDD1235
	5	Rivet	RBM-003
	6	Slide SW Packing (B)	DEC2590
NSP	7	Front Panel Stay	DNH2571
	8	Slide SW Packing (A)	DEC2589
	9	Front Panel (7)	DNB1122
	10	Power Knob Guide	DNK4198
	11	Caution Label	See Contrast table(2)
	12	Rotary Knob (SS)	DAA1162
	13	Flexible Cable (3P)	DDD1236
	14	Screw	BBZ30P060FZK
	15	Screw	AMZ26P040FMC
	16	Flange Nut M9	DBN1004
	17	Nut	NKX2FUC
	18	Washer	DBE1010

(2) CONTRAST TABLE

DJM-707/ KUCXJ, DJM-707 WYXJ, DJM-707/ TLTXJ and DJM-707/NKXJ are constructed the same except for the following :

Mark	No.	Symbol and Description	DJM-707 KUCXJ	DJM-707 WYXJ	DJM-707 TLTXJ	DJM-707 NKXJ
NSP	11	Caution Label	DRW1975	Not used	Not used	Not used

3. BLOCK DIAGRAM AND SCHEMATIC DIAGRM

3.1 OVERALL BLOCK DIAGRAM

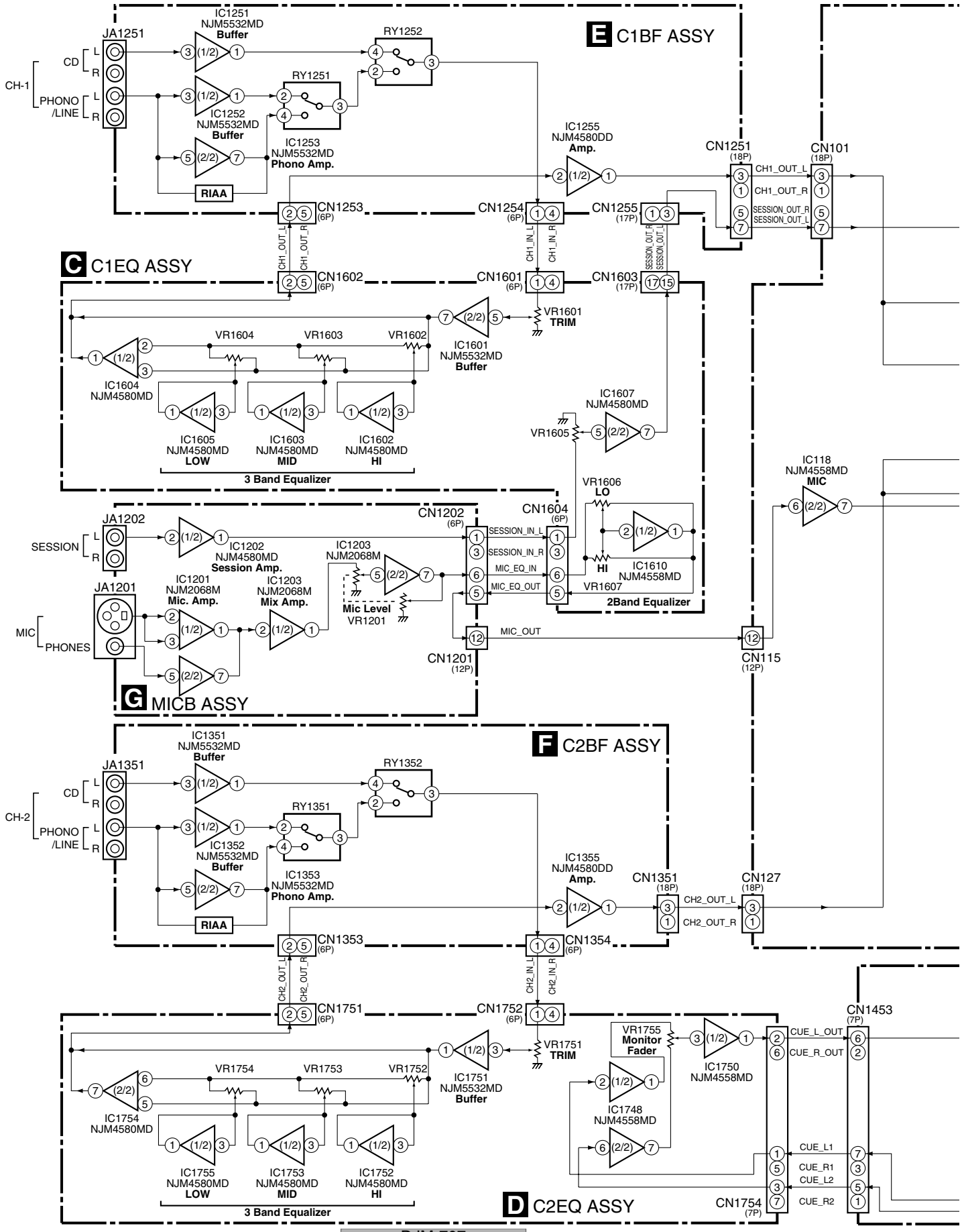

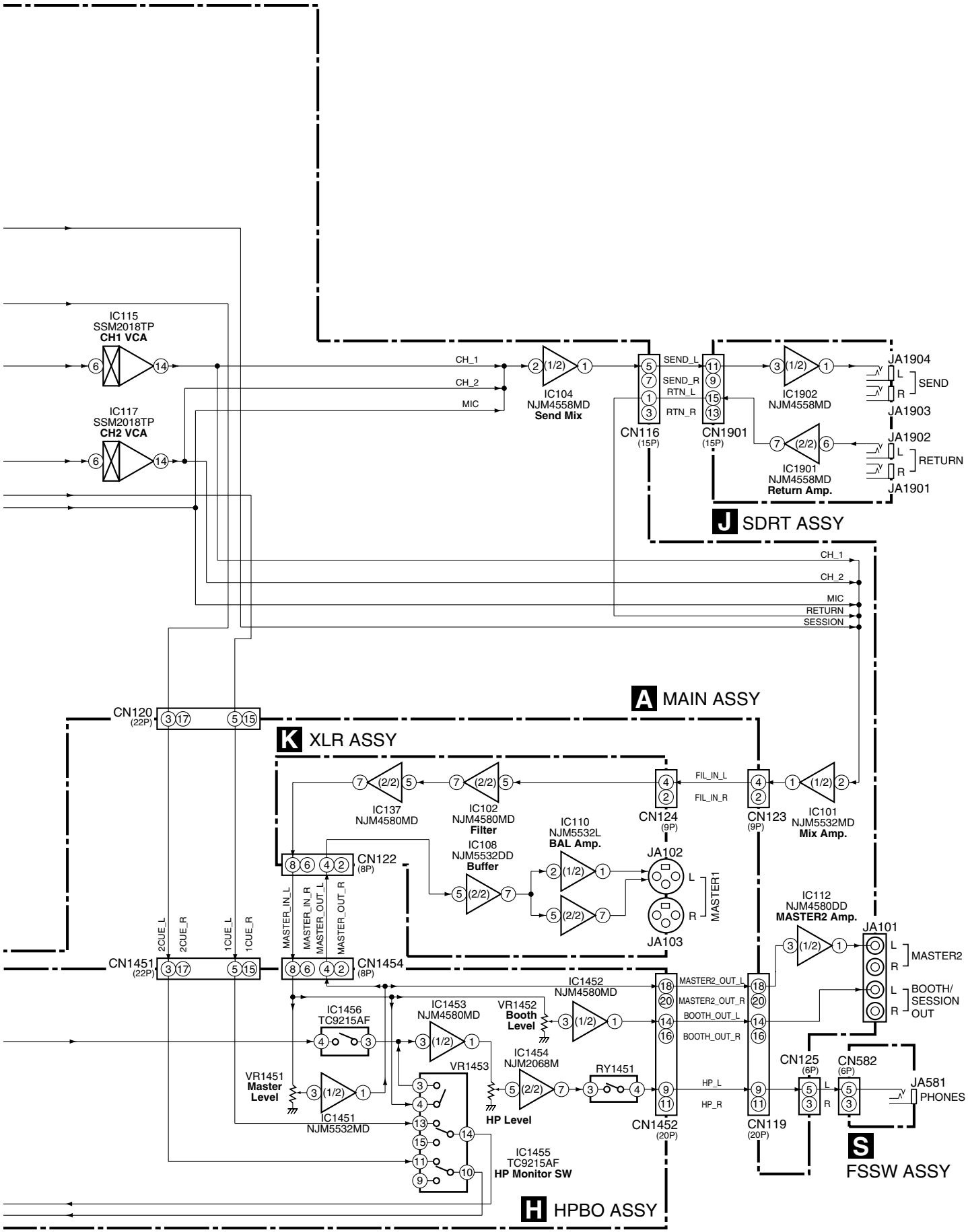
IC115
SSM2018TP
CH1 VCA
IC117
SSM2018TP
CH2 VCA
CH_1
CH_2
MIC
IC104
NJM4558MD
Send Mix
SEND_L
SEND_R
RTN_L
RTN_R
CN116
(15P)
CN1901
(15P)
IC1902
NJM4558MD
IC1901
NJM4558MD
Return Amp.
JA1904
JA1903
JA1902
JA1901
SEND
RETURN
J SDRT ASSY
RETURN
SESSION
A MAIN ASSY
CN120
(22P)
K XLR ASSY
IC137
NJM4580MD
IC102
NJM4580MD
Filter
IC108
NJM5532DD
Buffer
IC110
NJM5532L
BAL Amp.
CN124
(9P)
FIL_IN_L
FIL_IN_R
CN123
(9P)
IC101
NJM5532MD
Mix Amp.
CN122
(8P)
JA102
JA103
MASTER1
IC112
NJM4580DD
MASTER2 Amp.
JA101
MASTER2
BOOTH/
SESSION
OUT
2CUE_L
2CUE_R
1CUE_L
1CUE_R
MASTER_IN_L
MASTER_IN_R
MASTER_OUT_L
MASTER_OUT_R
CN1451
(22P)
CN1454
(8P)
IC1452
NJM4580MD
MASTER2_OUT_L
MASTER2_OUT_R
BOOTH_OUT_L
BOOTH_OUT_R
IC1456
TC9215AF
IC1453
NJM4580MD
VR1452
Booth
Level
IC1454
NJM2068M
VR1453
RY1451
VR1451
Master
Level
IC1451
NJM5532MD
HP Level
HP_L
HP_R
CN1452
(20P)
CN119
(20P)
CN125
(6P)
CN582
(6P)
JA581
PHONES
IC1455
TC9215AF
HP Monitor SW
S
FSSW ASSY
H HPBO ASSY

3.2 OVERALL CONNECTION DIAGRAM

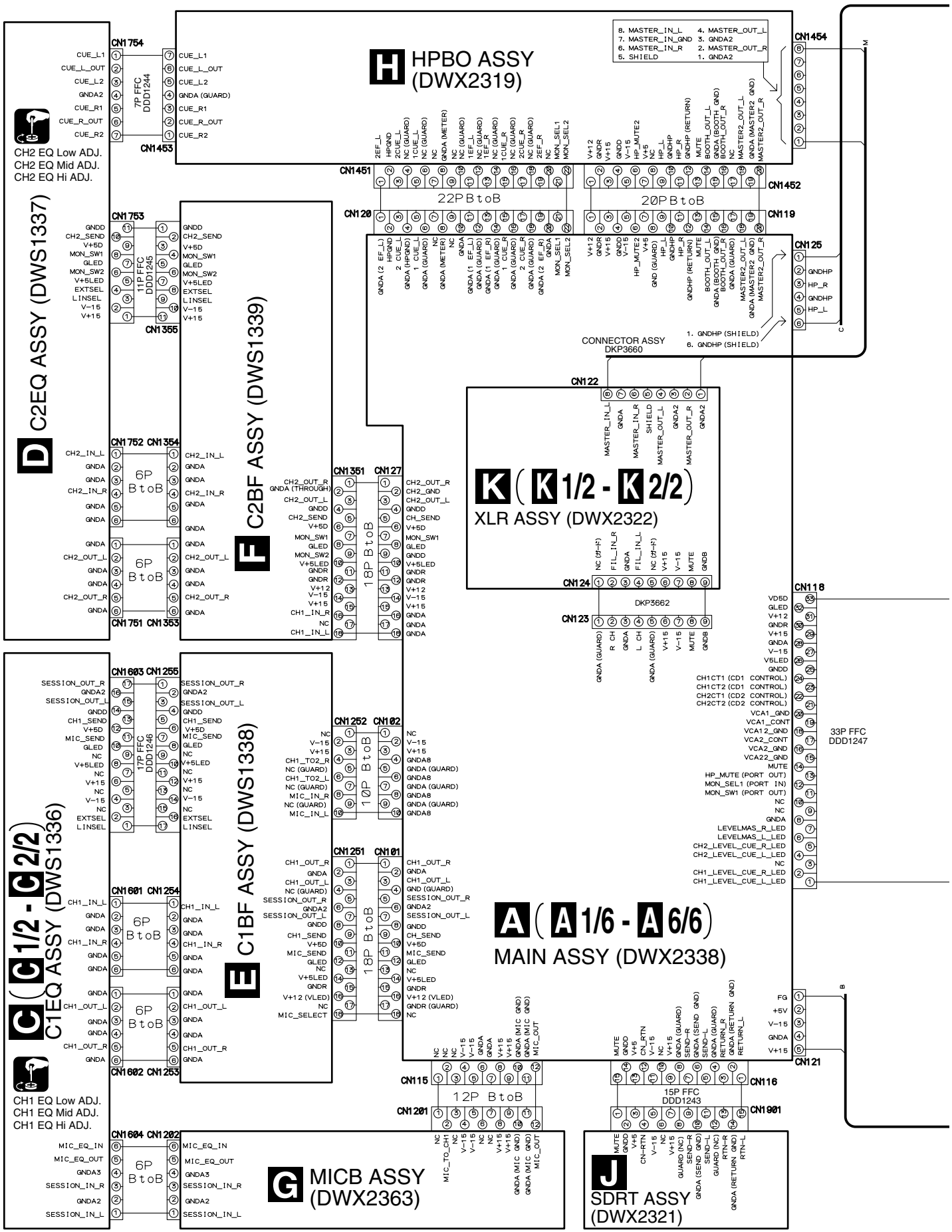

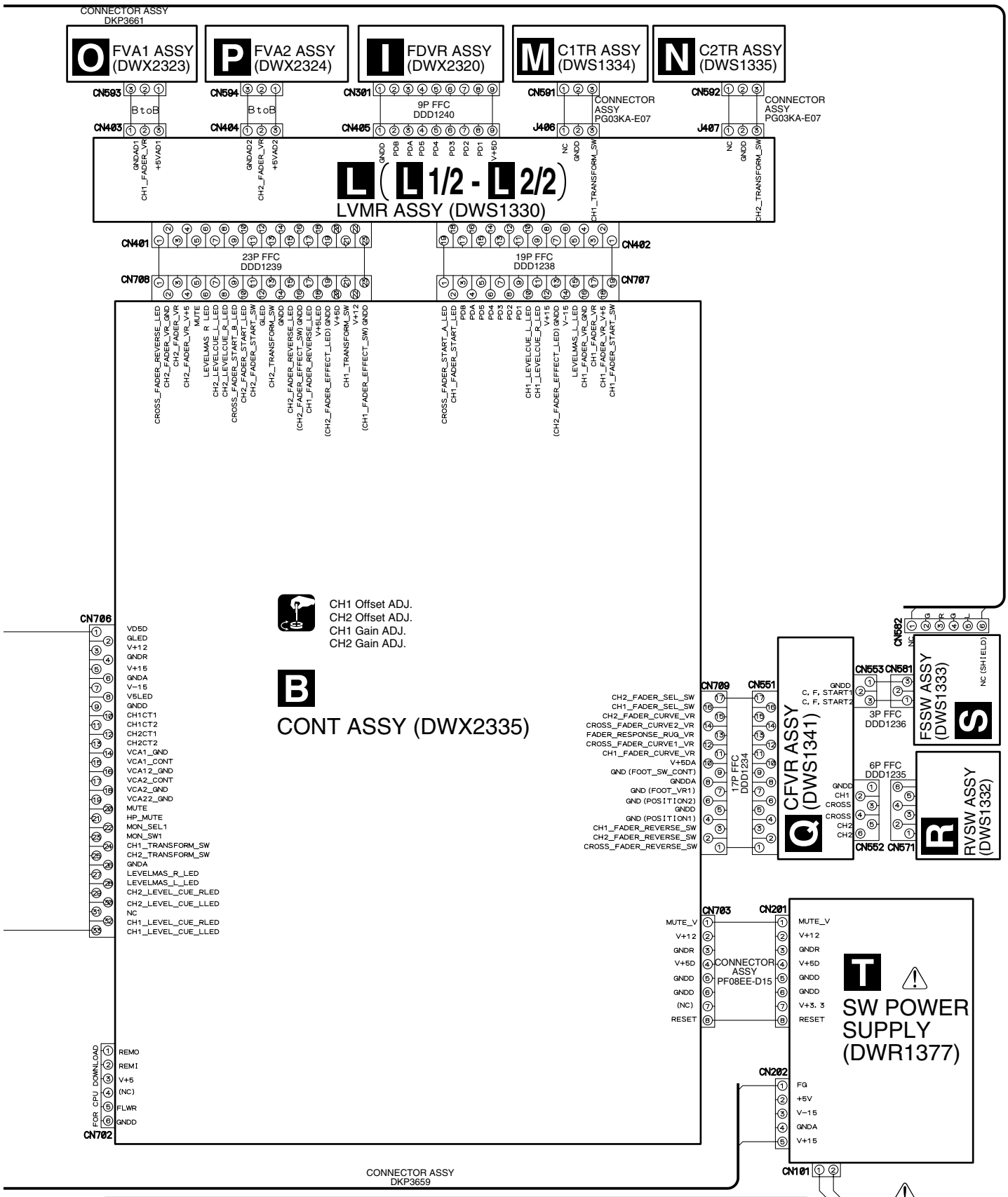

- When ordering service parts, be sure to refer to "EXPLODED VIEWS and PARTS LIST" or "PCB PARTS LIST".
- The ⚠ mark found on some component parts indicates the importance of the safety factor of the part. Therefore, when replacing, be sure to use parts of identical designation.
- : The power supply is shown with the marked box.

3.3 MAIN ASSY (1/6)

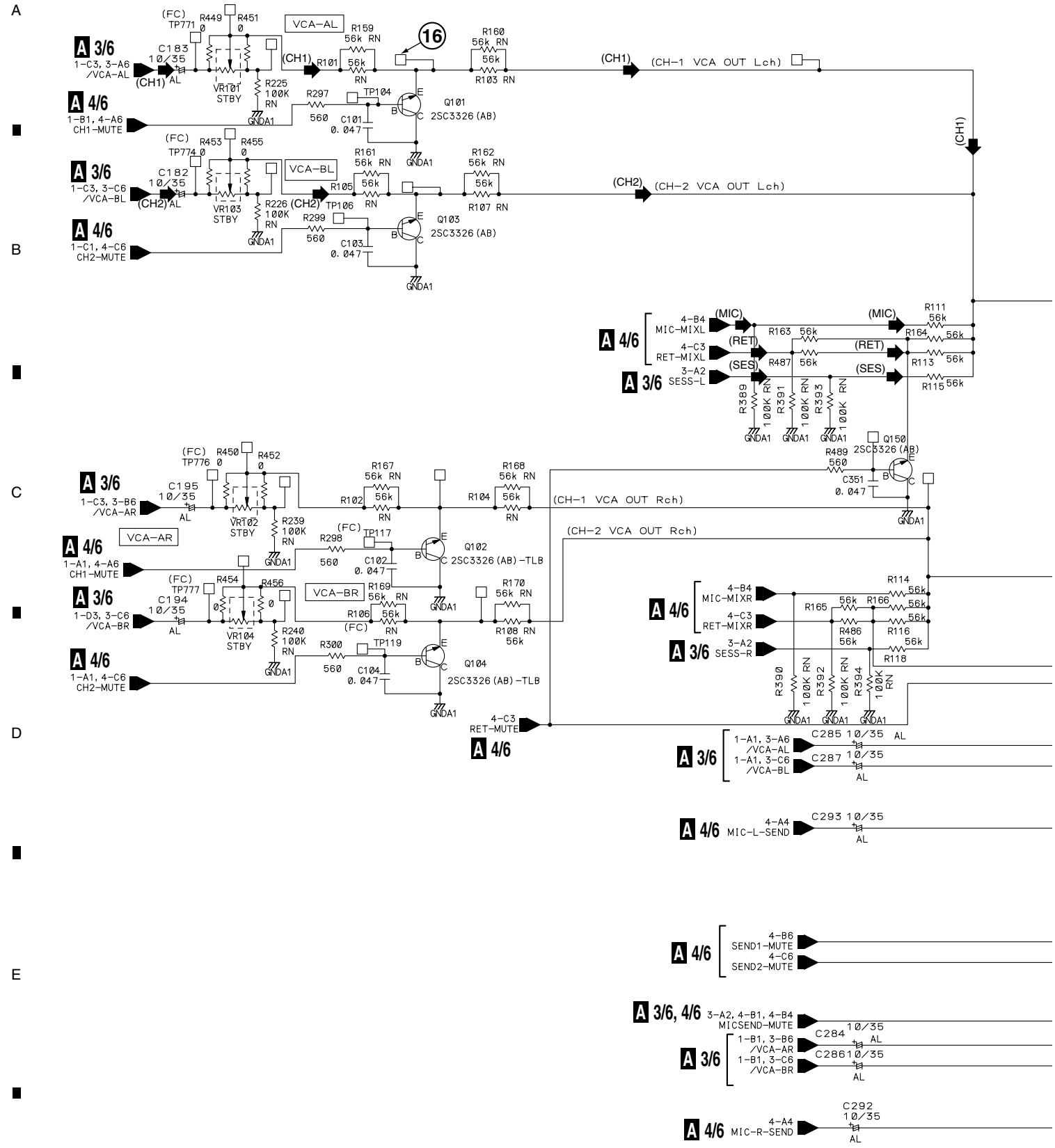

A 1/6 MAIN ASSY (DWX2338)

• MIX AMP. BLOCK

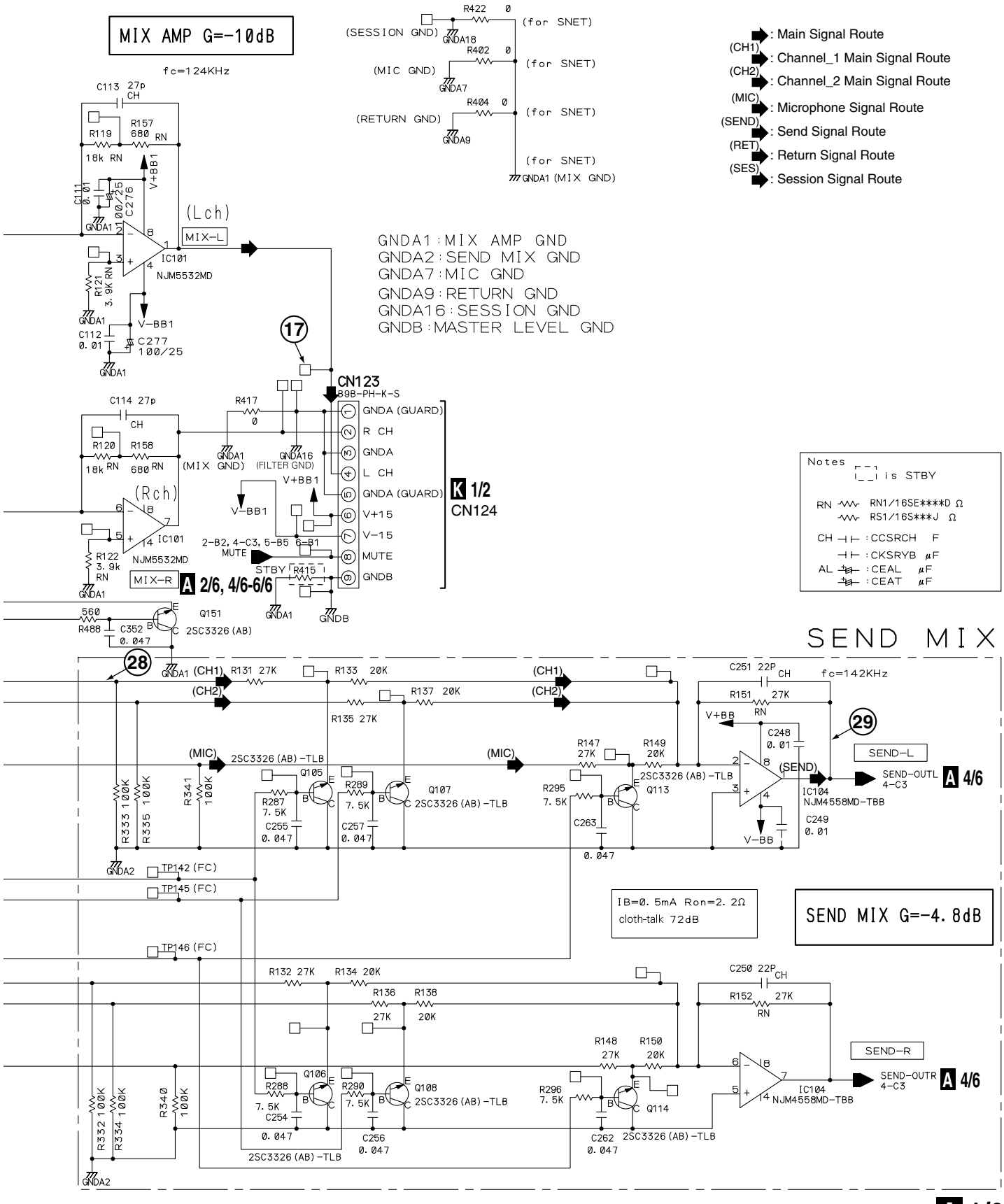

3.4 MAIN ASSY (2/6)

A

A 2/6 MAIN ASSY (DWX2338)

B

C

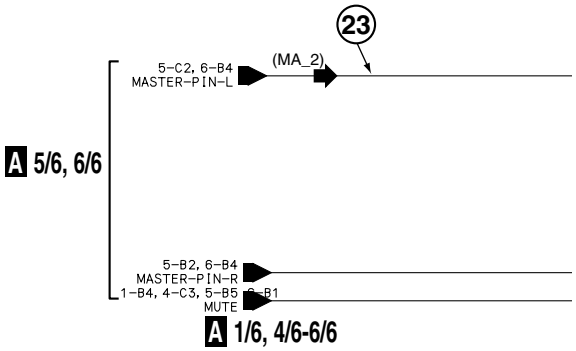

D

E

F

(MA_2) : MASTER_2 Signal Route
(BOOTH) : Booth Signal Route

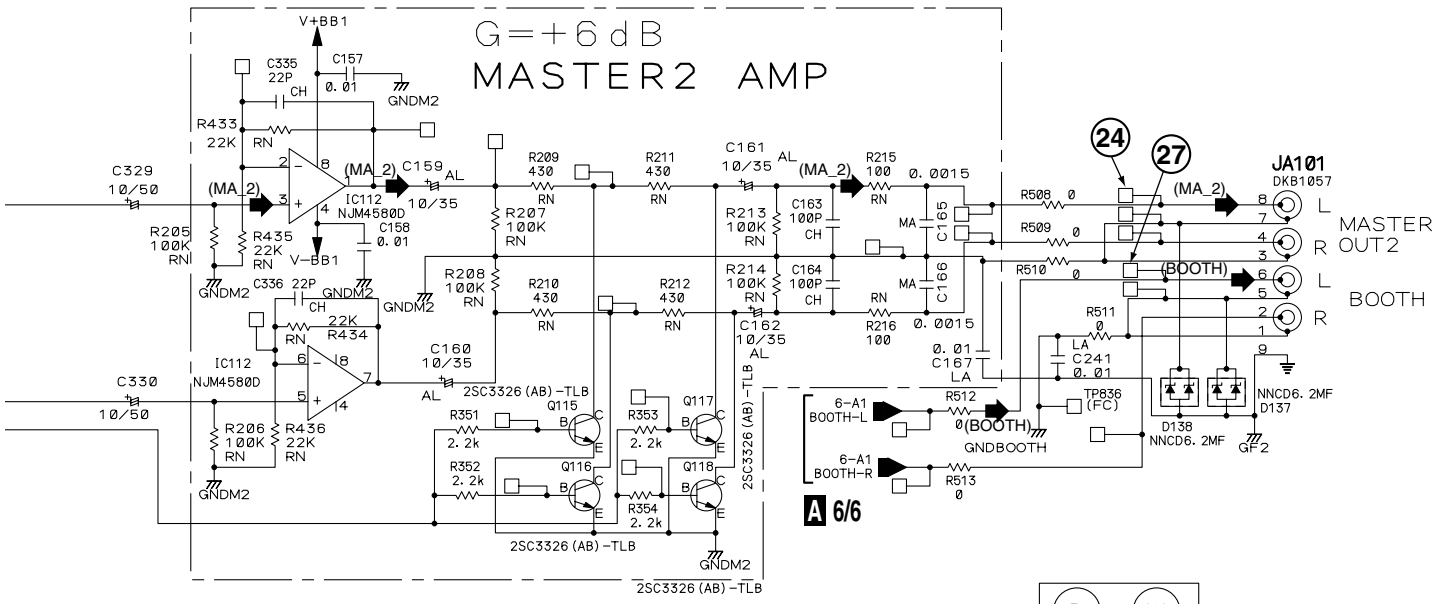

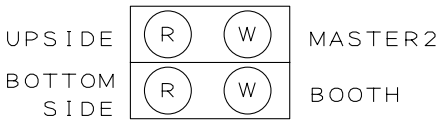

Notes
[ ] : is STBY
RN RN1/16SE****D Ω
RS1/16S***J Ω
CH : CCSRCH F
LA : CFTLA μF
MA : CQMA μF
: CKSRYB μF
AL : CEAL μF
: CEAT μF

A 2/6

3.5 MAIN ASSY (3/6)

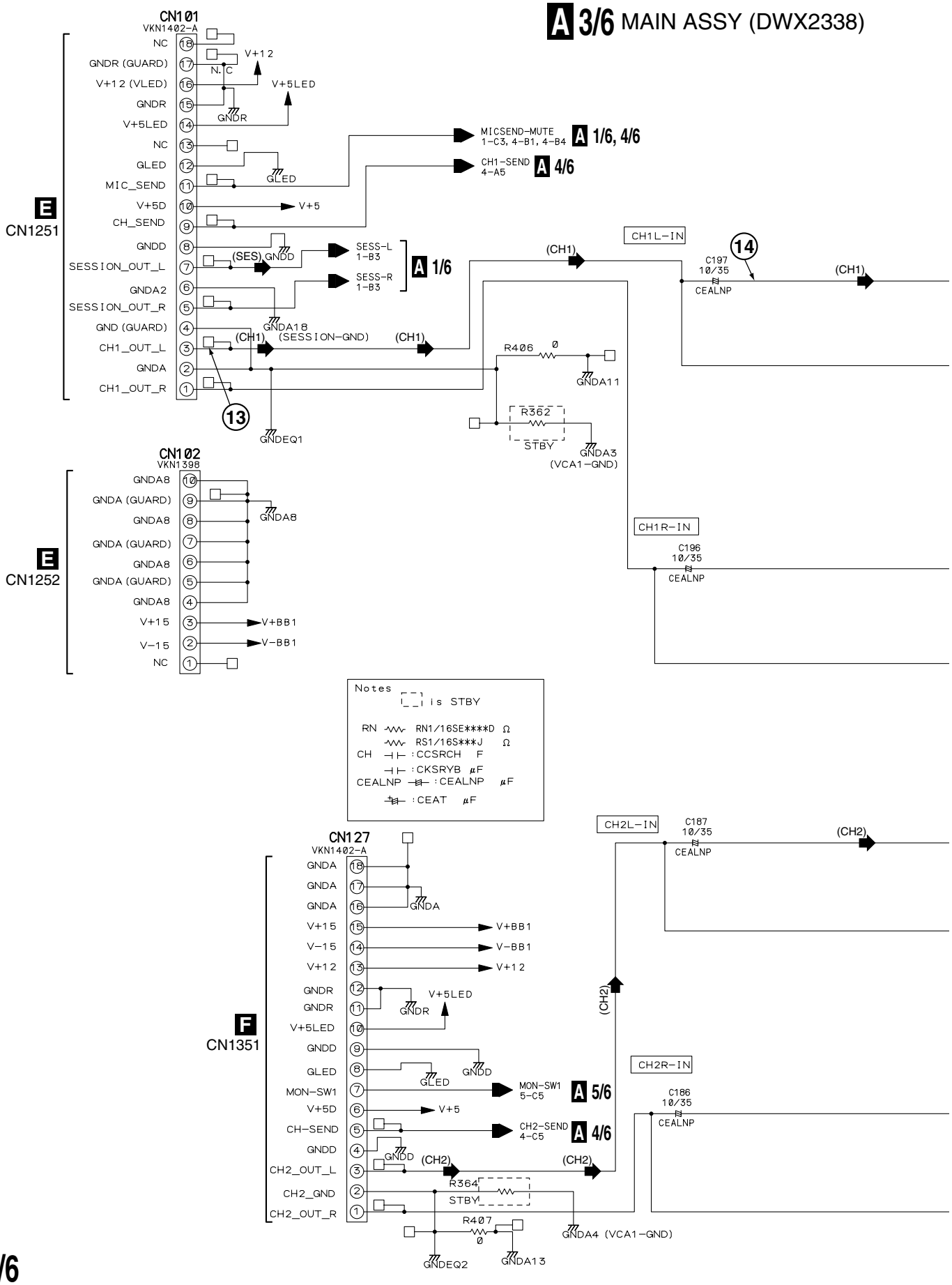

A 3/6

(CH1) : Channel_1 Main Signal Route
(CH2) : Channel_2 Main Signal Route
(SES) : Session Signal Route

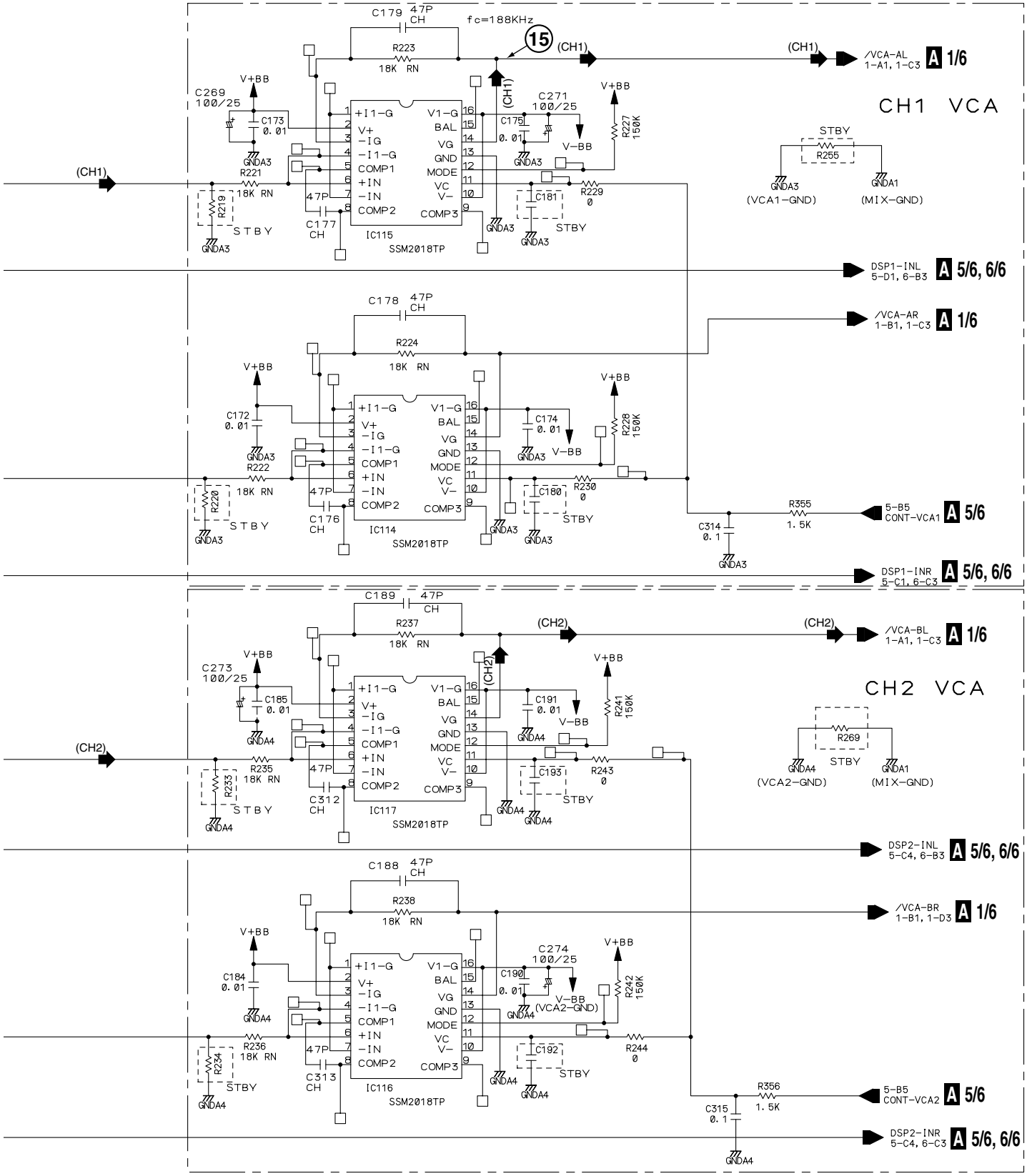

A 3/6

3.6 MAIN ASSY (4/6)

A 4/6 MAIN ASSY (DWX2338)

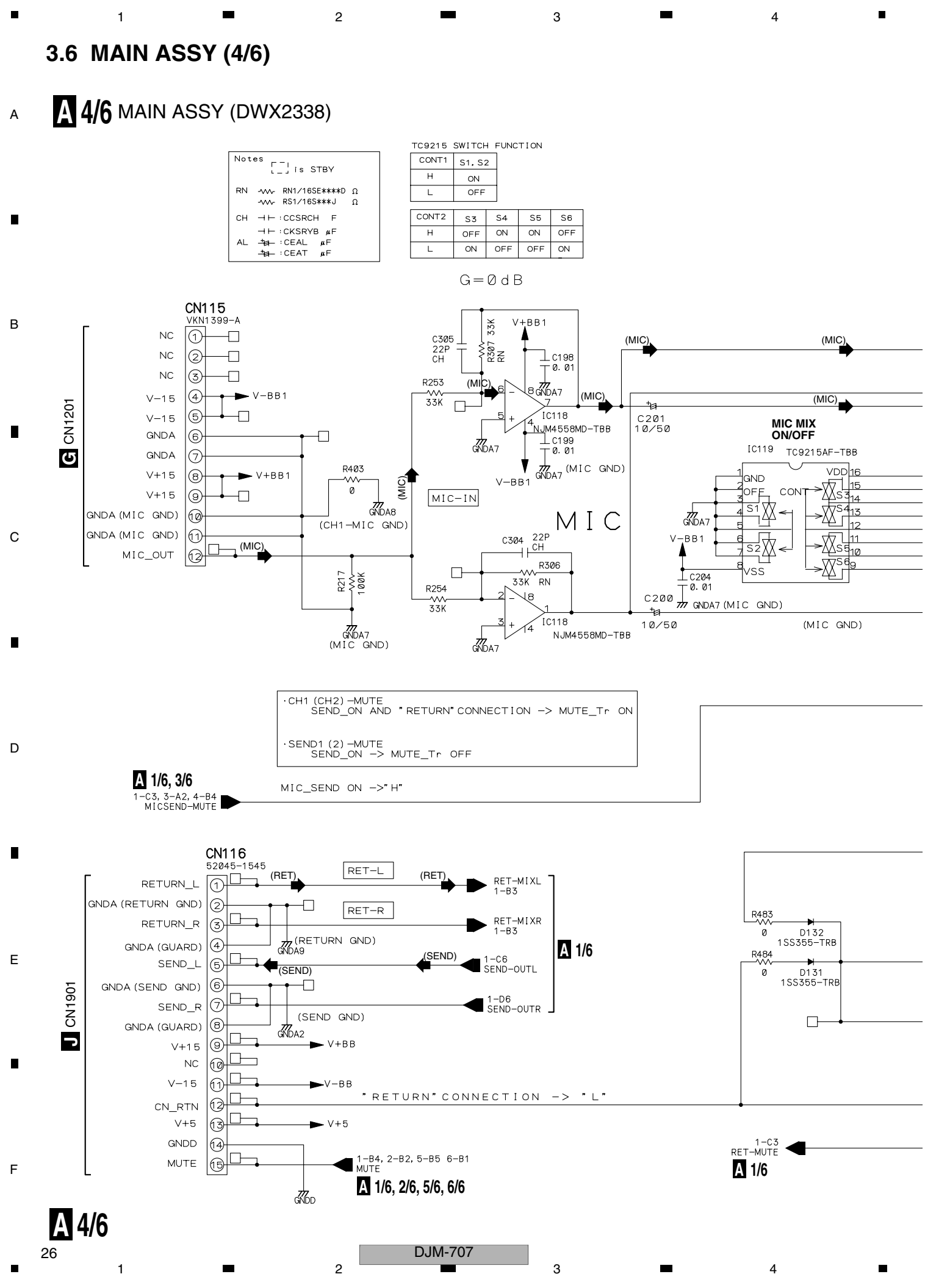

A 4/6

(MIC) : Microphone Signal Route
(SEND) : Send Signal Route
(RET) : Return Signal Route

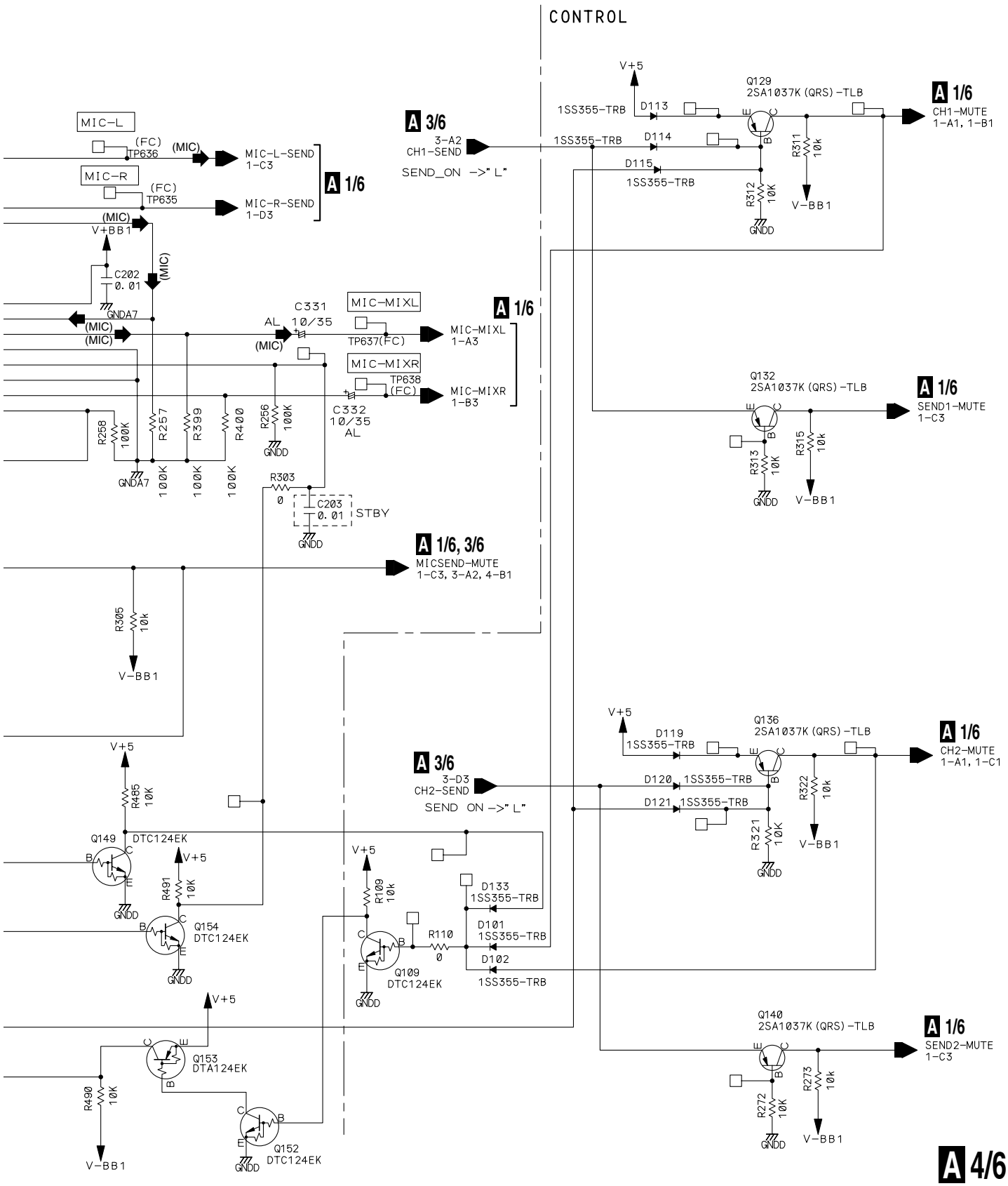

3.7 MAIN ASSY (5/6)

A **A 5/6** MAIN ASSY (DWX2338)

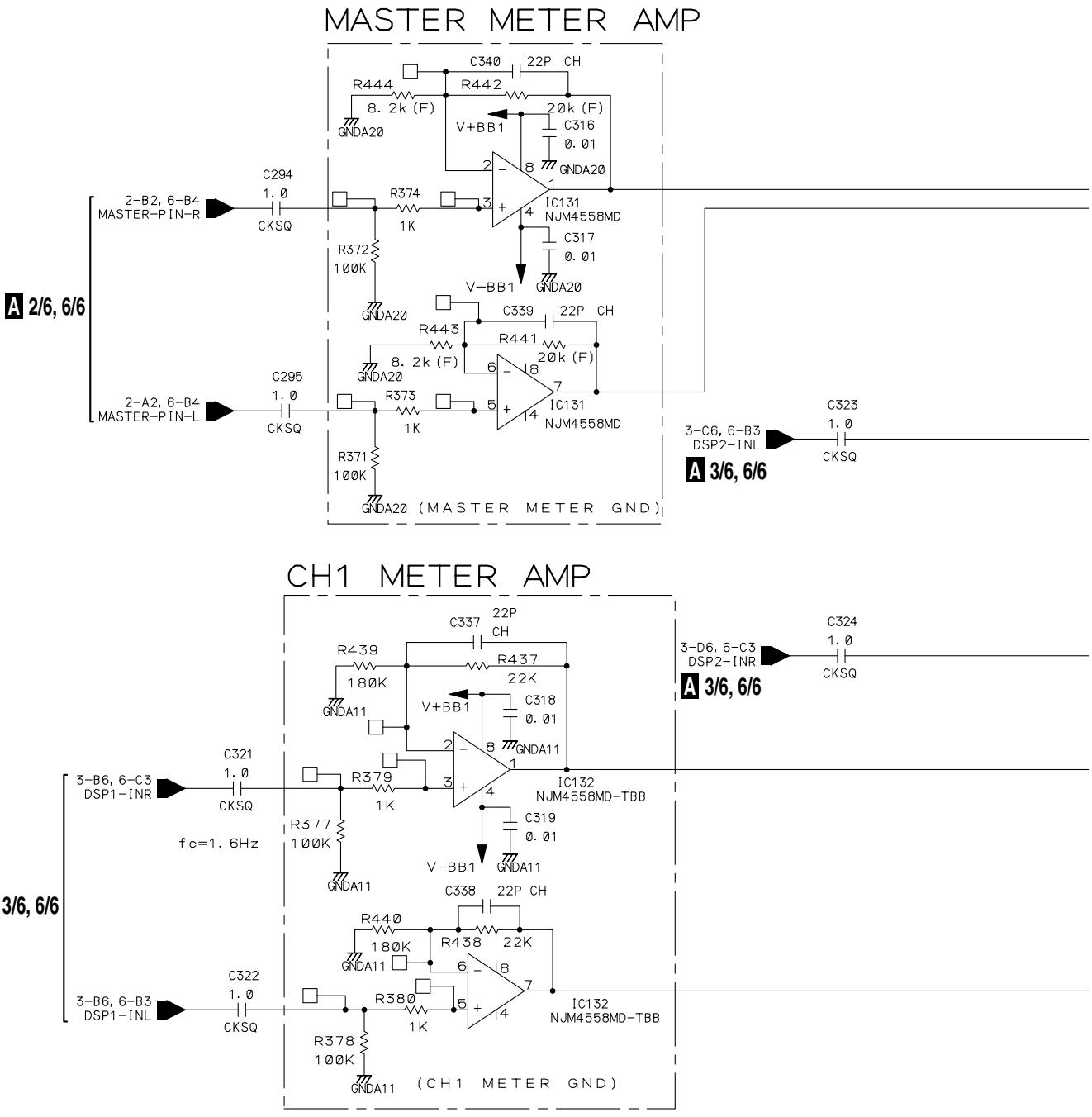

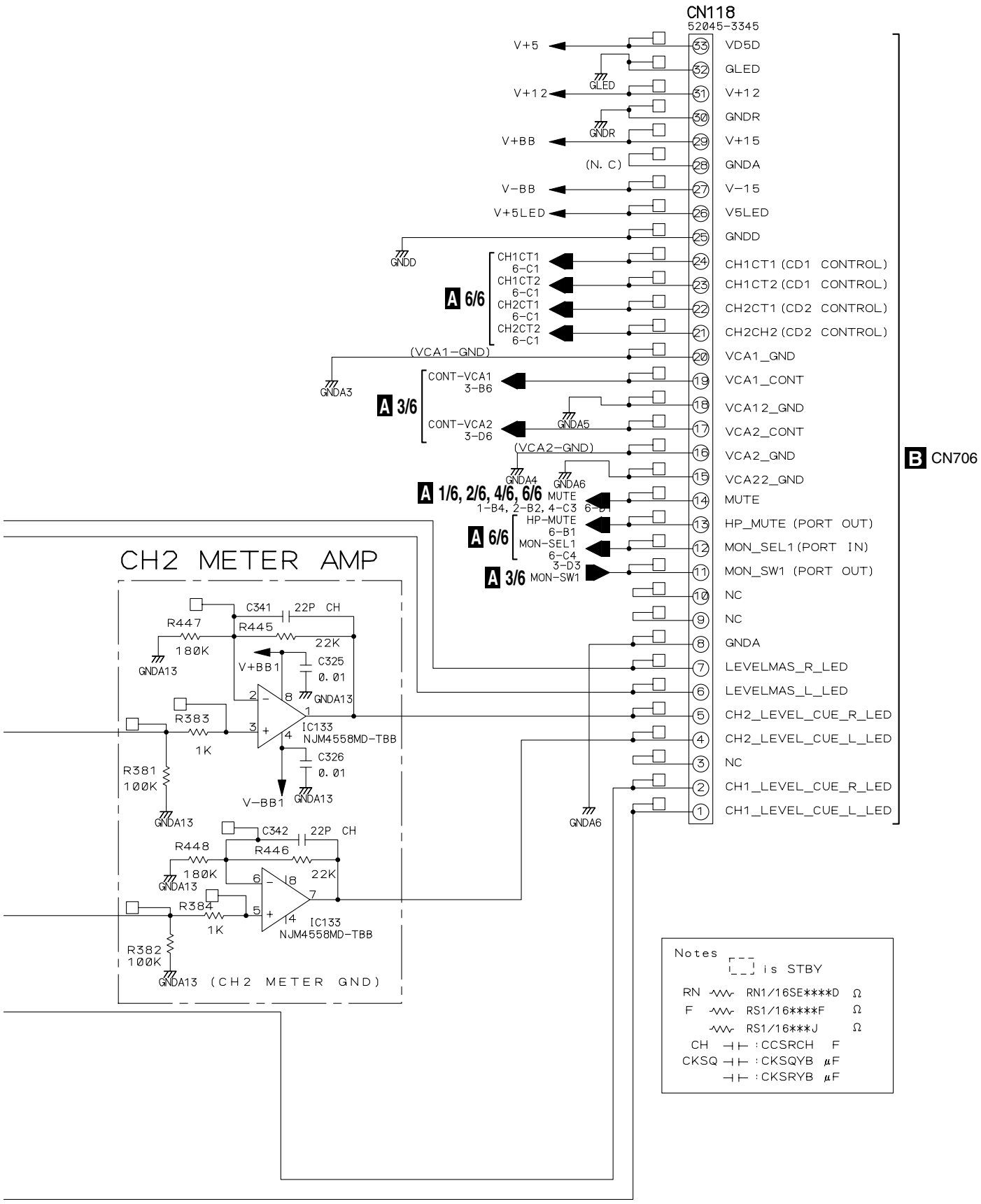
CN118
52045-3345
V+5
GLED
V+12
GNDR
V+BB
(N. C)
V-BB
V+5LED
GNDD
A 6/6
CH1CT1 6-C1
CH1CT2 6-C1
CH2CT1 6-C1
CH2CT2 6-C1
(VCA1-GND)
GNDA3
A 3/6
CONT-VCA1 3-B6
CONT-VCA2 3-D6
GNDA5
(VCA2-GND)
GNDA4
GNDA6
A 1/6, 2/6, 4/6, 6/6 MUTE
1-B4, 2-B2, 4-C3 6-B
A 6/6
HP-MUTE 6-B1
MON-SEL1 6-C4
A 3/6 MON-SW1
GNDA6
53 VD5D
52 GLED
51 V+12
50 GNDR
29 V+15
28 GNDA
27 V-15
26 V5LED
25 GNDD
24 CH1CT1 (CD1 CONTROL)
23 CH1CT2 (CD1 CONTROL)
22 CH2CT1 (CD2 CONTROL)
21 CH2CH2 (CD2 CONTROL)
20 VCA1_GND
19 VCA1_CONT
18 VCA12_GND
17 VCA2_CONT
16 VCA2_GND
15 VCA22_GND
14 MUTE
13 HP_MUTE (PORT OUT)
12 MON_SEL1 (PORT IN)
11 MON_SW1 (PORT OUT)
10 NC
9 NC
8 GNDA
7 LEVELMAS_R_LED
6 LEVELMAS_L_LED
5 CH2_LEVEL_CUE_R_LED
4 CH2_LEVEL_CUE_L_LED
3 NC
2 CH1_LEVEL_CUE_R_LED
1 CH1_LEVEL_CUE_L_LED
B CN706
CH2 METER AMP
C341 22P CH
R447 180K
R445 22K
GNDA13
V+BB1
C325 0.01
R383 1K
IC133 NJM4558MD-TBB
C326 0.01
R381 100K
V-BB1
C342 22P CH
R448 180K
R446 22K
R384 1K
R382 100K
GNDA13 (CH2 METER GND)
Notes
is STBY
RN RN1/16SE****D Ω
F RS1/16****F Ω
RS1/16***J Ω
CH : CCSRCH F
CKSQ : CKSQYB μF
: CKSRYB μF

3.8 MAIN ASSY (6/6)

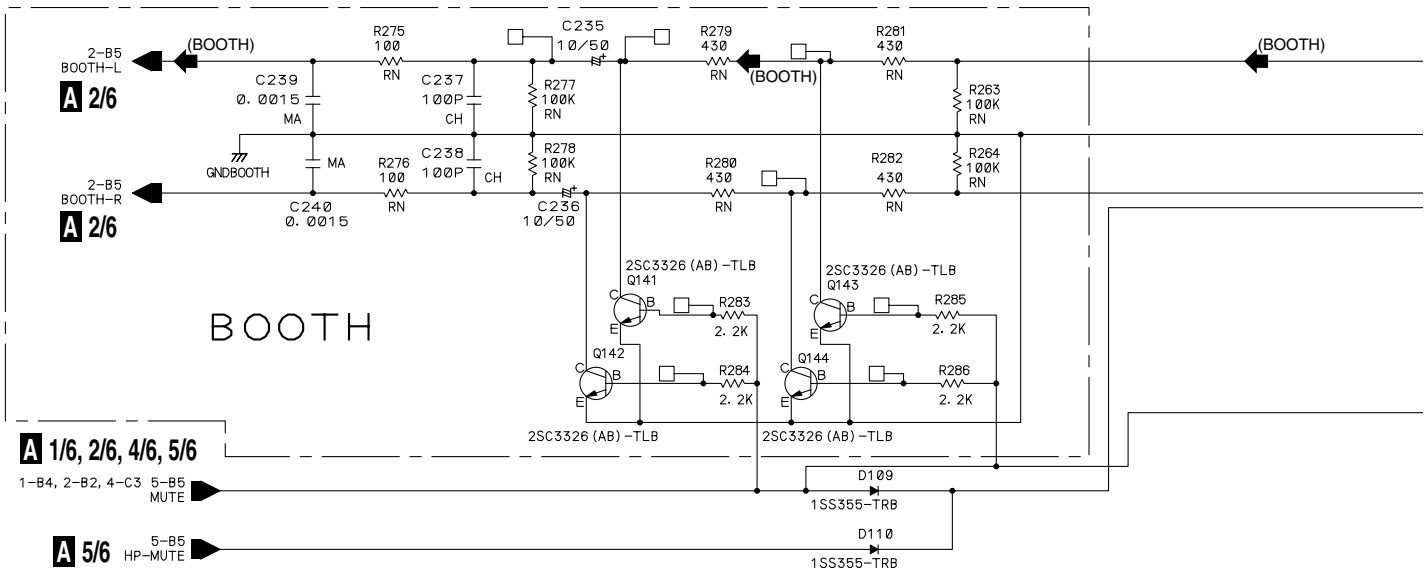

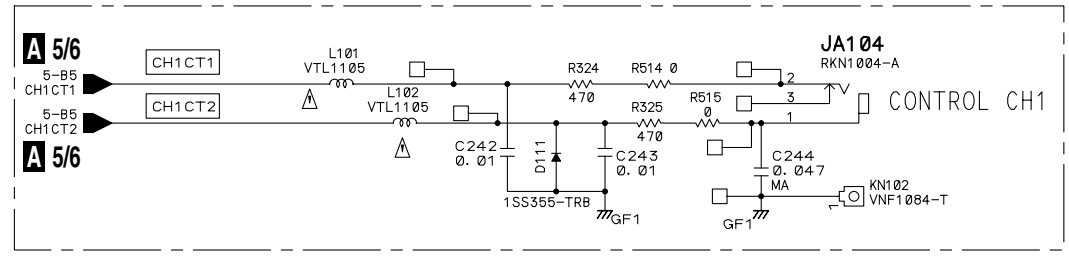

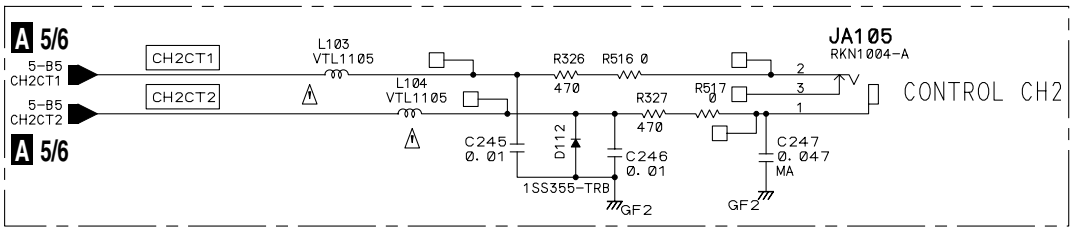

GNDA1 : MIX AMP GND
GNDA2 : SEND MIX GND
GNDA3 : VCA1 GND
GNDA4 : VCA2 GND
GNDA5 : VCA12 GND
GNDA6 : VCA22 GND
GNDA7 : MIC GND
GNDA8 : CH1 MIC GND
GNDA9 : RETURN GND
GNDA11 : CH1 METER GND
GNDA13 : CH2 METER GND
GNDA14 : MASTER METER GND
GNDA16 : FILTER GND
GNDA17 : MASTER LEVEL IN GND
GNDA18 : SESSION GND
GNDM2 : MASTER2 GND
GNDB : MASTER LEVEL OUT GND

Notes
: is STBY
RN RN1/16SE****D Ω
RS1/16S***J Ω
CH : CCSRCH F
MA : CQMA µF
: CKSRYB µF
AL : CEAL µF
: CEAT µF

CAUTION : FOR CONTINUED PROTECTION AGAINST RISK OF FIRE. REPLACE ONLY WITH SAME TYPE NO. ICP-N15, MFD BY ROHM CO., LTD. FOR IC135.

CAUTION : FOR CONTINUED PROTECTION AGAINST RISK OF FIRE. REPLACE ONLY WITH SAME TYPE NO. ICP-N20, MFD BY ROHM CO., LTD. FOR IC134.

CAUTION : FOR CONTINUED PROTECTION AGAINST RISK OF FIRE. REPLACE ONLY WITH SAME TYPE NO. AEK7004 MFD, BY LITTELFUSE INK. FOR IC140, IC142 and IC143.

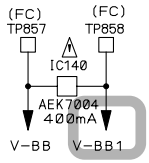

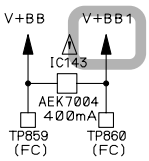

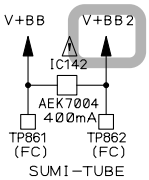

(CH1) : Channel_1 Main Signal Route
(CH2) : Channel_2 Main Signal Route
(MA_2) : MASTER_2 Signal Route
(BOOTH) : Booth Signal Route

A 6/6

A 6/6 MAIN ASSY (DWX2338)

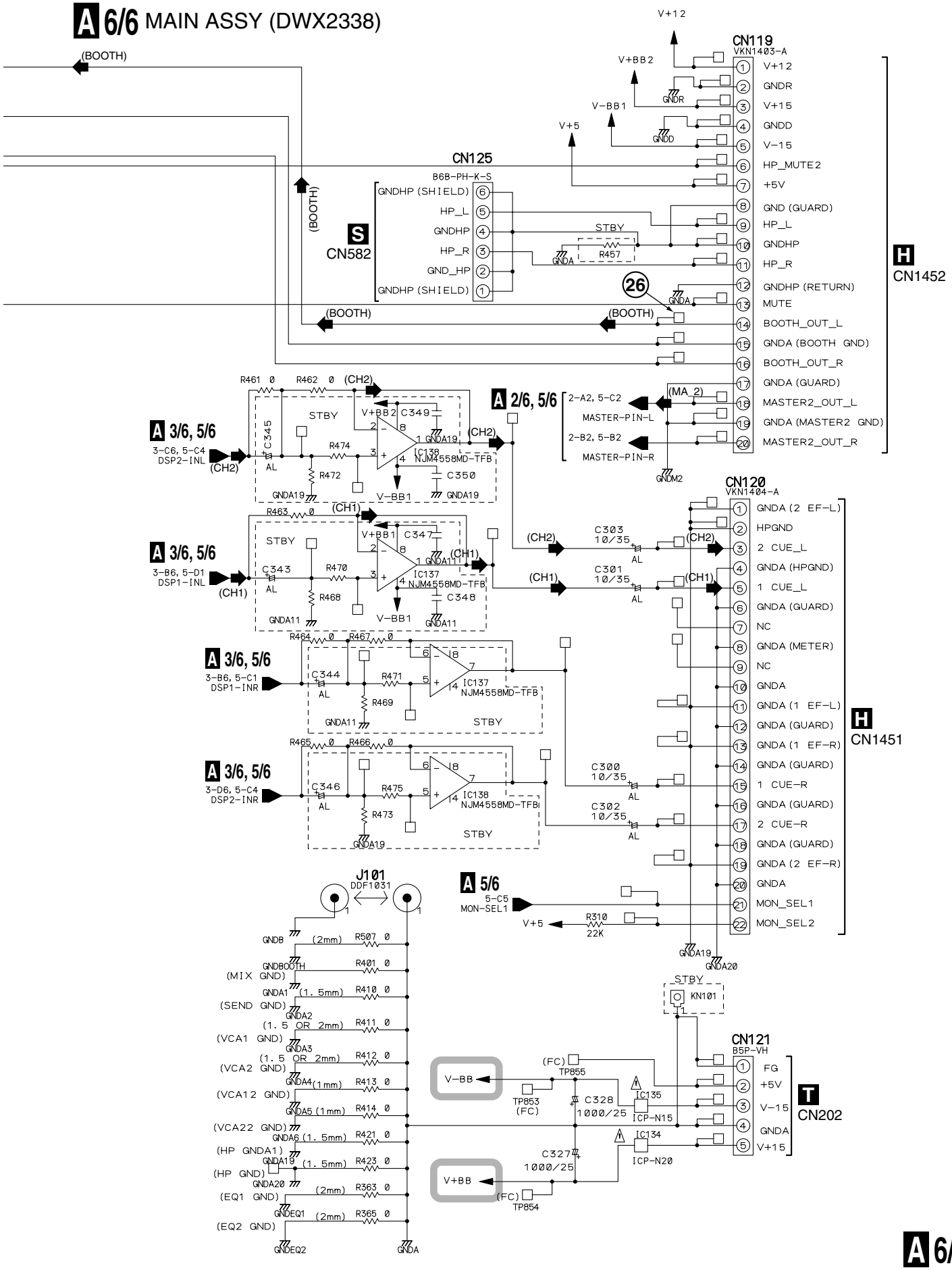

3.9 CONT ASSY

B CONT ASSY (DWX2335)

CAUTION : FOR CONTINUED PROTECTION AGAINST RISK OF FIRE. REPLACE ONLY WITH SAME TYPE NO. ICP-N20, MFD BY ROHM CO., LTD. FOR IC732.

CAUTION : FOR CONTINUED PROTECTION AGAINST RISK OF FIRE. REPLACE ONLY WITH SAME TYPE NO. AEK7004 MFD, BY LITTELFUSE INK. FOR IC734.

CAUTION : FOR CONTINUED PROTECTION AGAINST RISK OF FIRE. REPLACE ONLY WITH SAME TYPE NO. AEK7005 MFD, BY LITTELFUSE INK. FOR IC733.

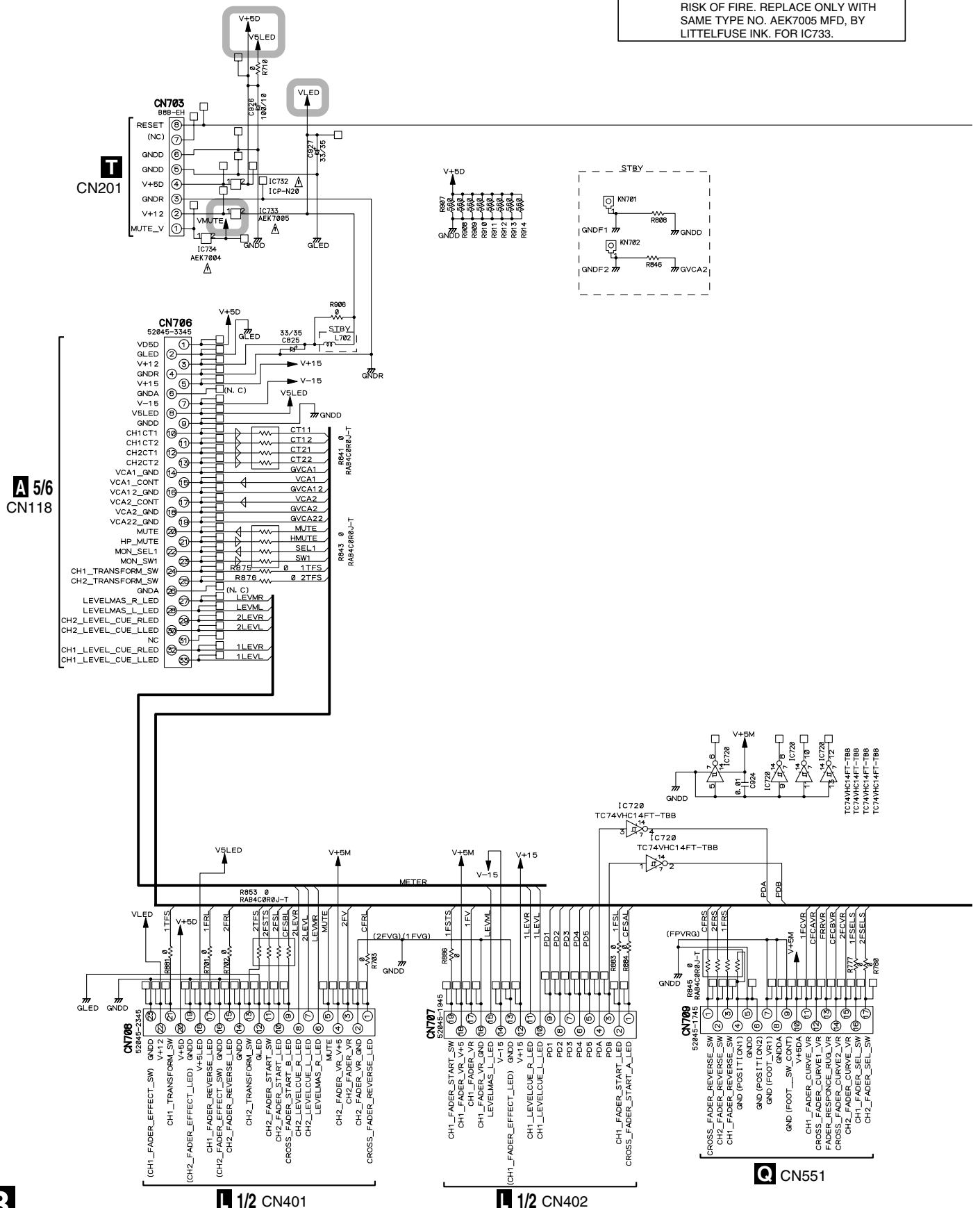

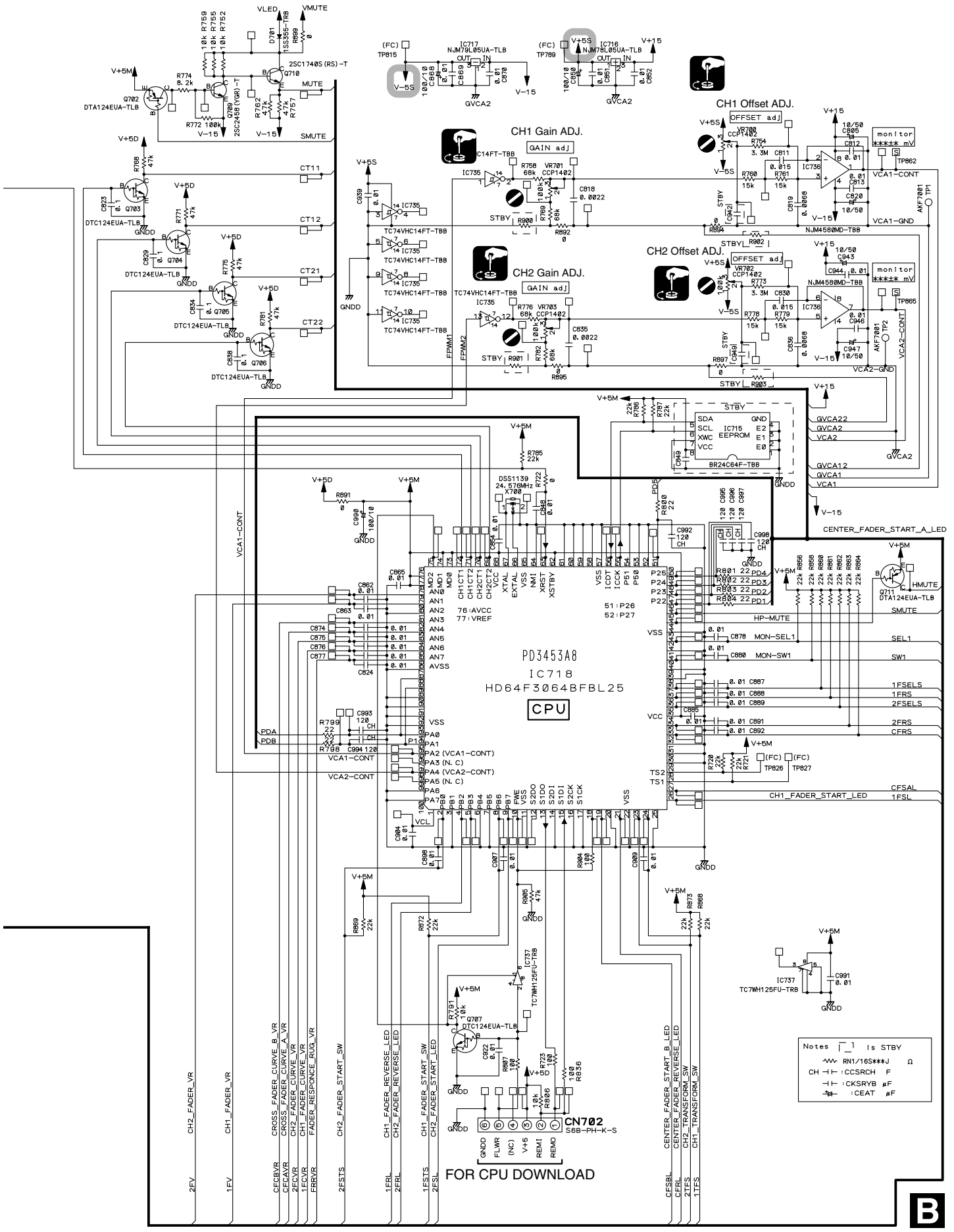

CH1 Gain ADJ.
CH1 Offset ADJ.
CH2 Gain ADJ.
CH2 Offset ADJ.
PD3453A8
IC718
HD64F3064BFBL25
CPU
CN702
S6B-PH-K-S
FOR CPU DOWNLOAD
Notes
Is STBY
RN1/16S***J
CCSRCH
CKSRYB
CEAT

3.10 C1EQ ASSY

C 1/2 C1EQ ASSY (DWS1336)

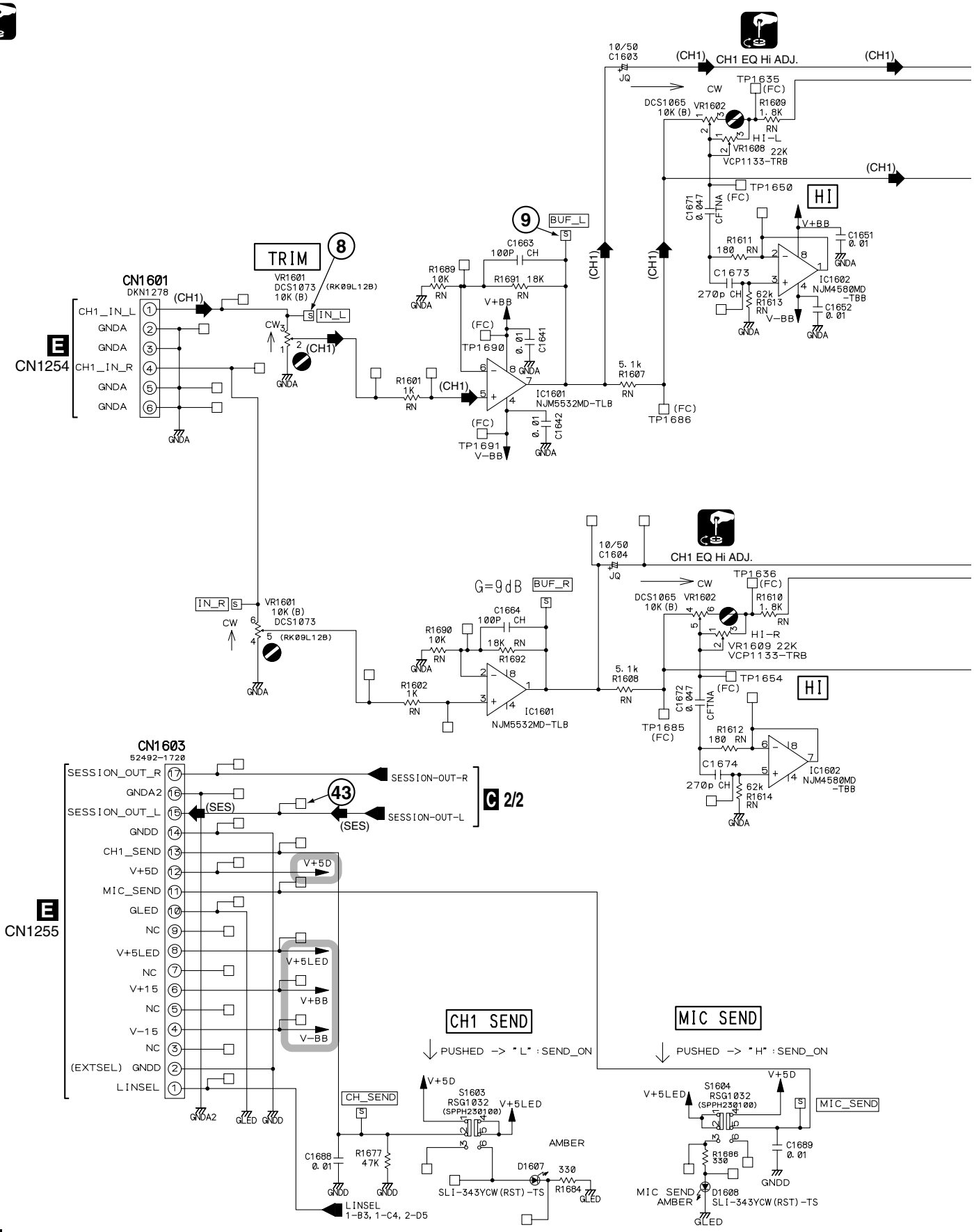

C 1/2

(CH1) : Channel_1 Main Signal Route
(SES) : Session Signal Route

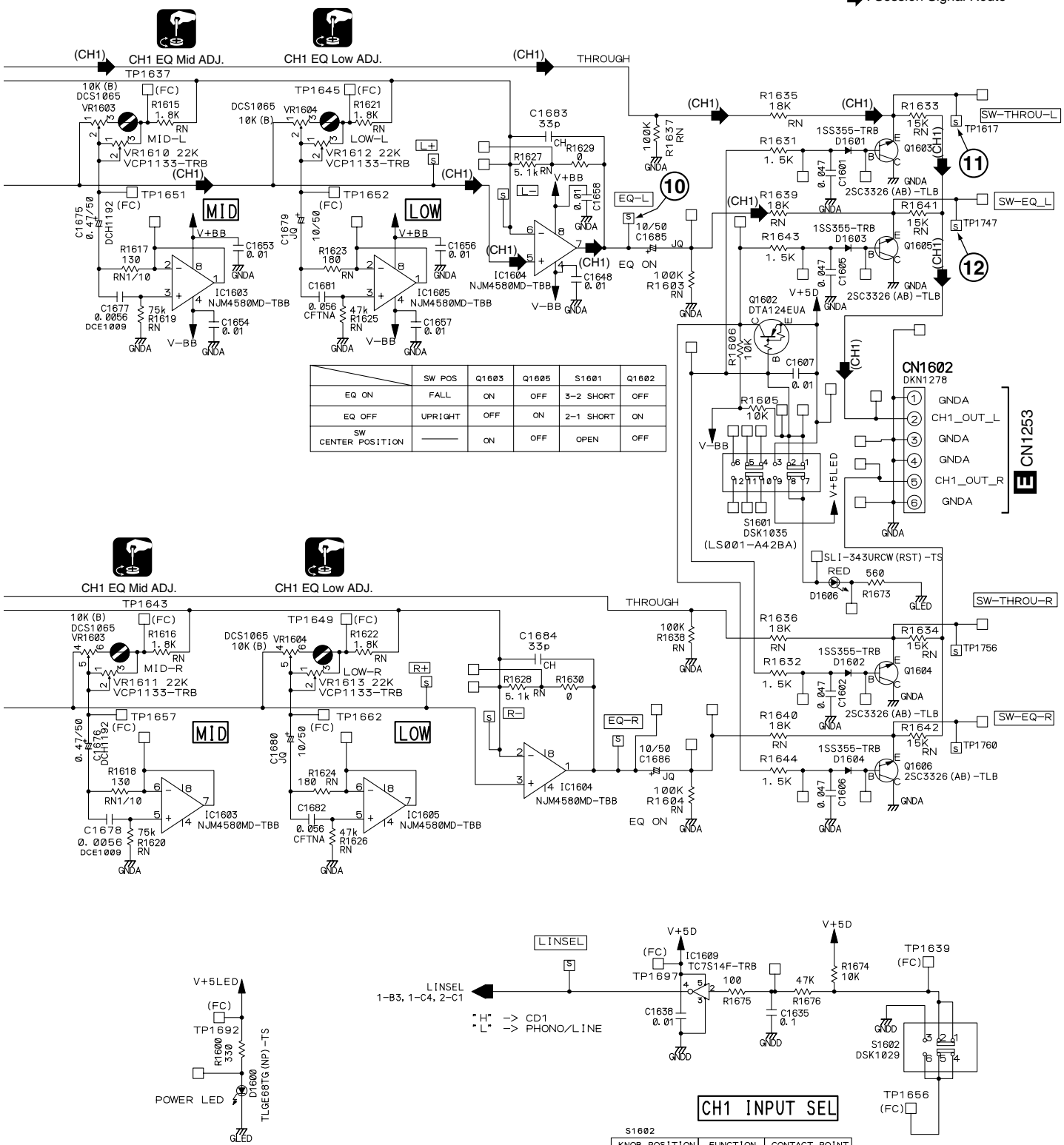

	SW POS	Q1603	Q1605	S1601	Q1602
EQ ON	FALL	ON	OFF	3-2 SHORT	OFF
EQ OFF	UPRIGHT	OFF	ON	2-1 SHORT	ON
SW CENTER POSITION	———	ON	OFF	OPEN	OFF

S1602

KNOB POSITION	FUNCTION	CONTACT POINT
CENTER	PHONO/LINE	2-1 5-4
RIGHT SIDE	CD1	2-3 5-6

Notes
[ ] : STBY
RN : RN1/16SE****D Ω
RN1/10 : RN1/10SE****D Ω
: RS1/16S***J Ω
CH : CCSRCH F
CFTNA : CFTNA μF
: CKSRYB μF
JQ : CEJQ μF

C 1/2

3.11 C1EQ ASSY (2/2)

C 2/2 C1EQ ASSY (DWS1336)

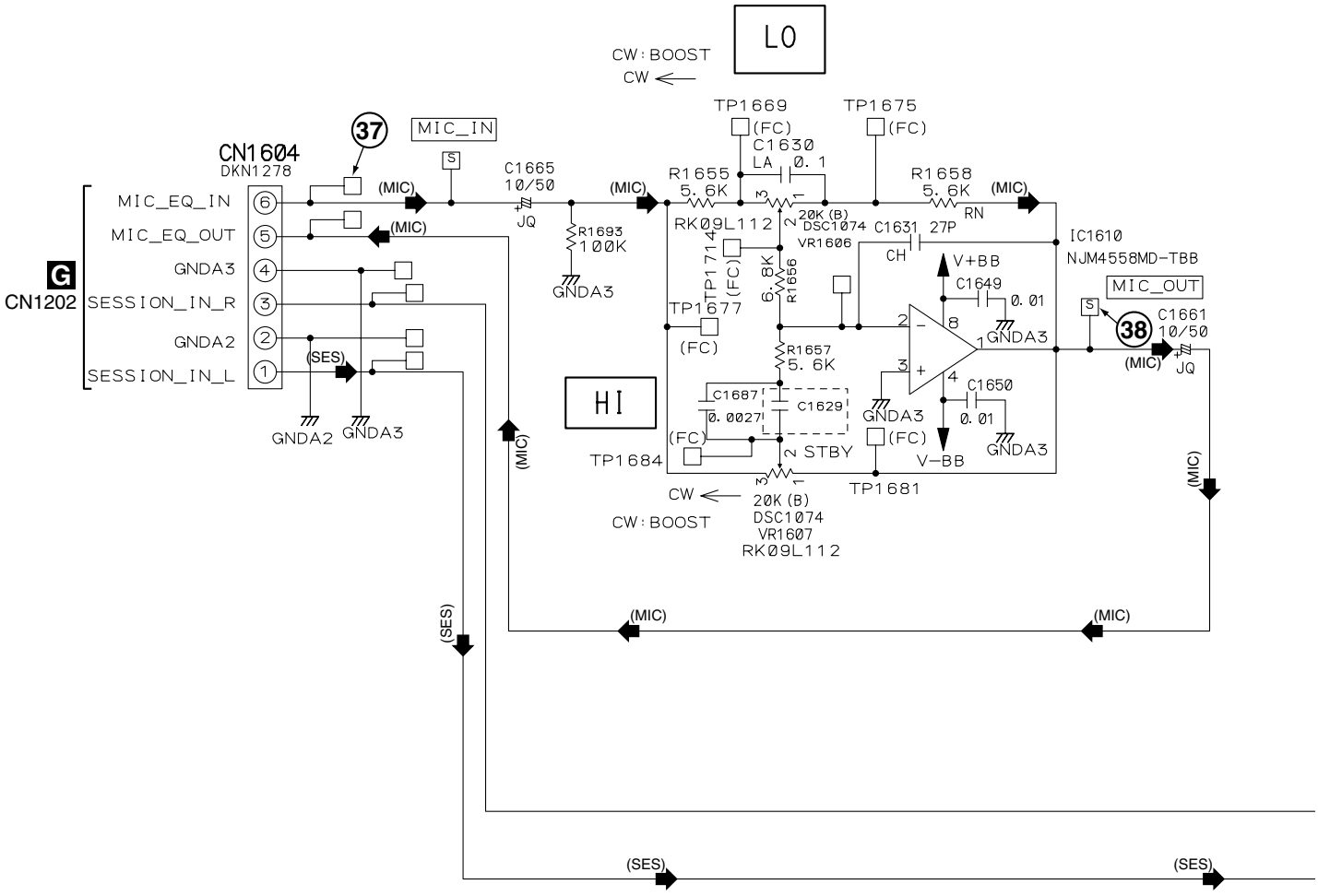

Notes

[ ] is STBY

RN	RN1/16SE****D	Ω
	RS1/16S***J	Ω
CH	: CCSRCH	F
LA	: CFTLA	μF
	: CKSRYB	μF
JQ	: CEJQ	μF

C 2/2

(MIC) : Microphone Signal Route
(SES) : Session Signal Route

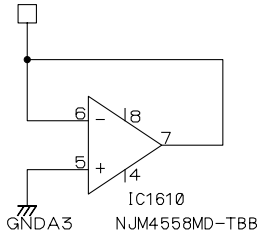

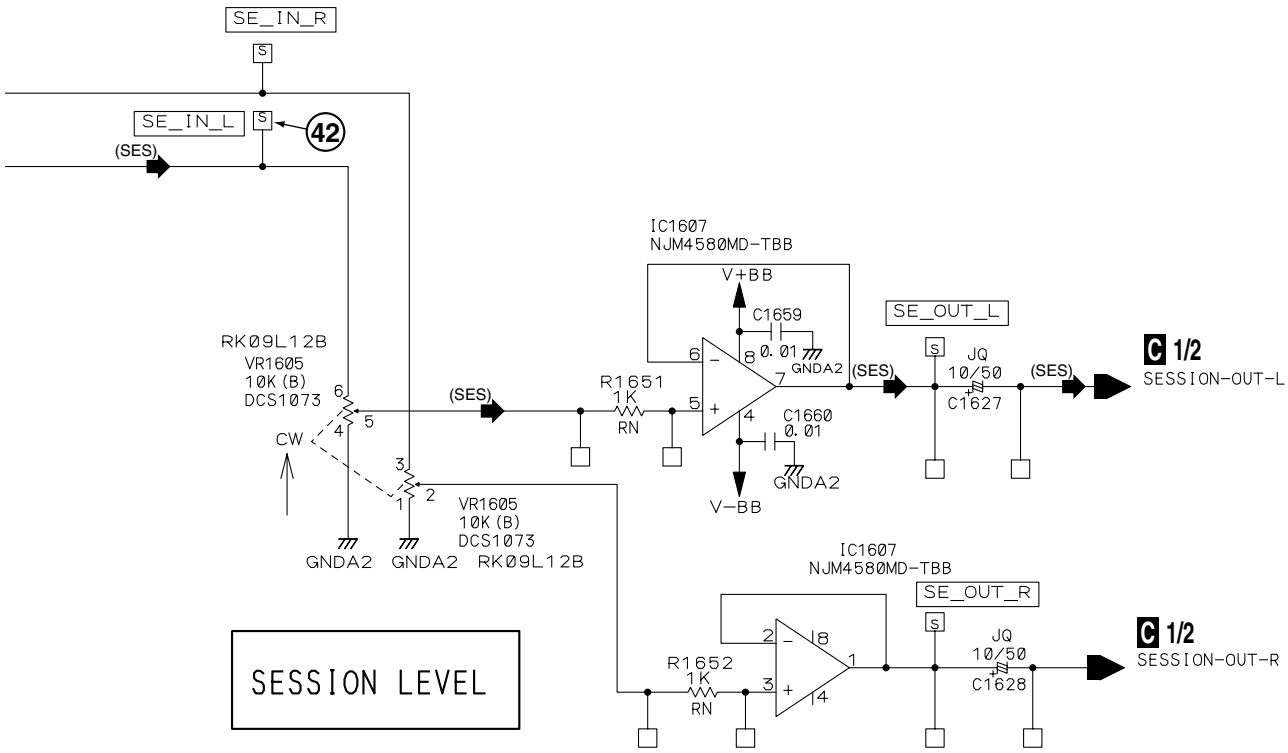

C 2/2

3.12 C2EQ ASSY

D C2EQ ASSY (DWS1337)

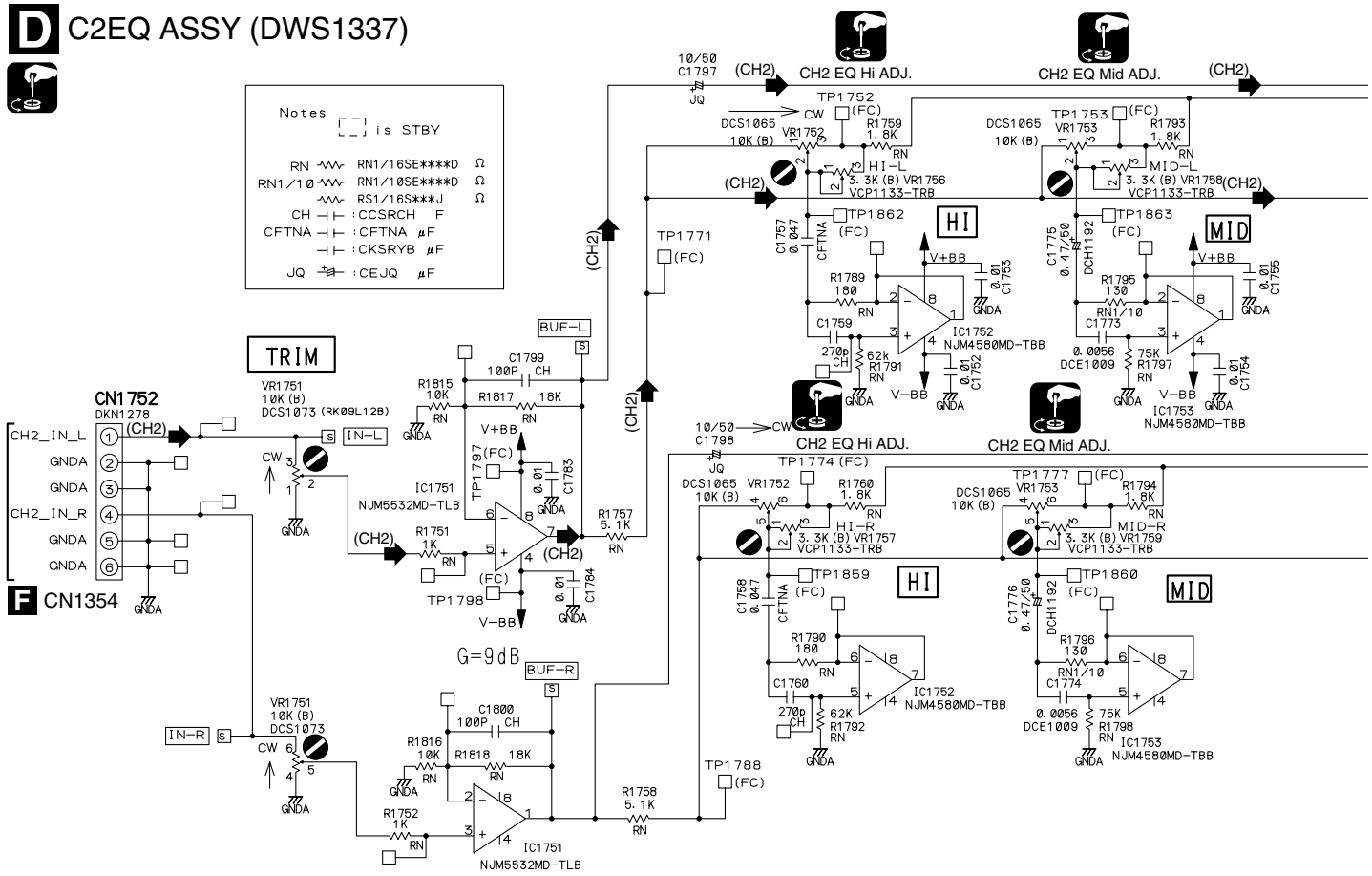

F CN1354

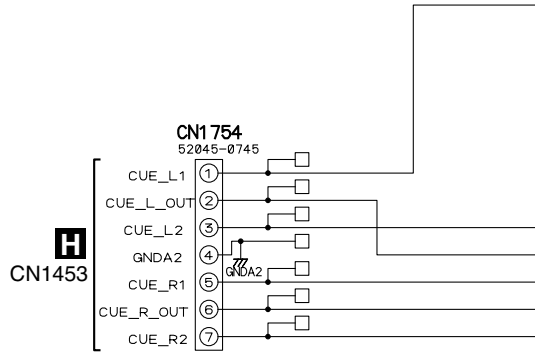

H CN1453

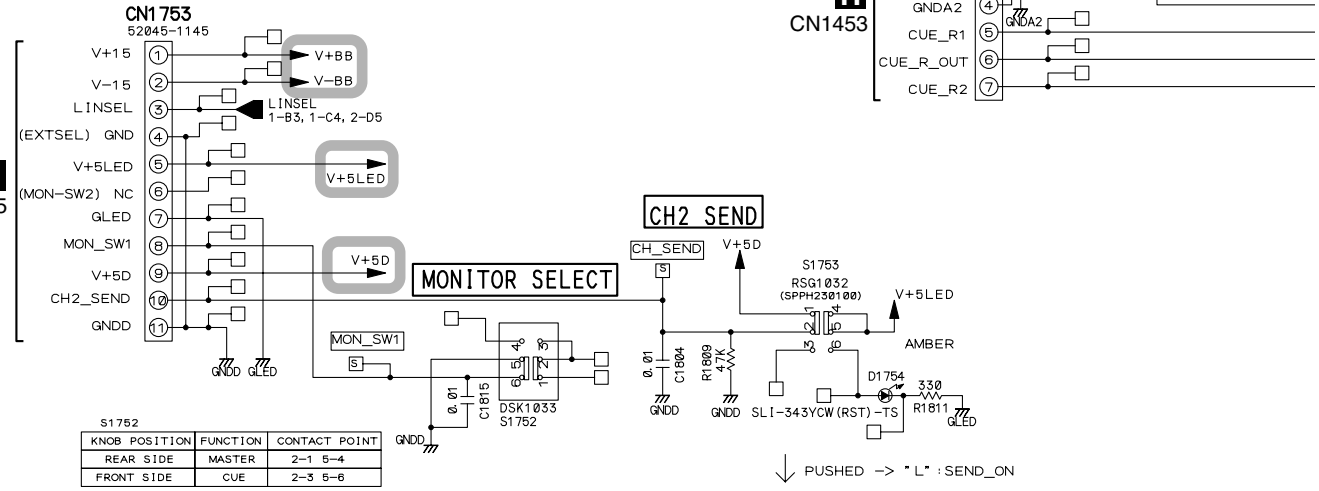

F CN1355

S1752

KNOB POSITION	FUNCTION	CONTACT POINT
REAR SIDE	MASTER	2-1 5-4
FRONT SIDE	CUE	2-3 5-6

D

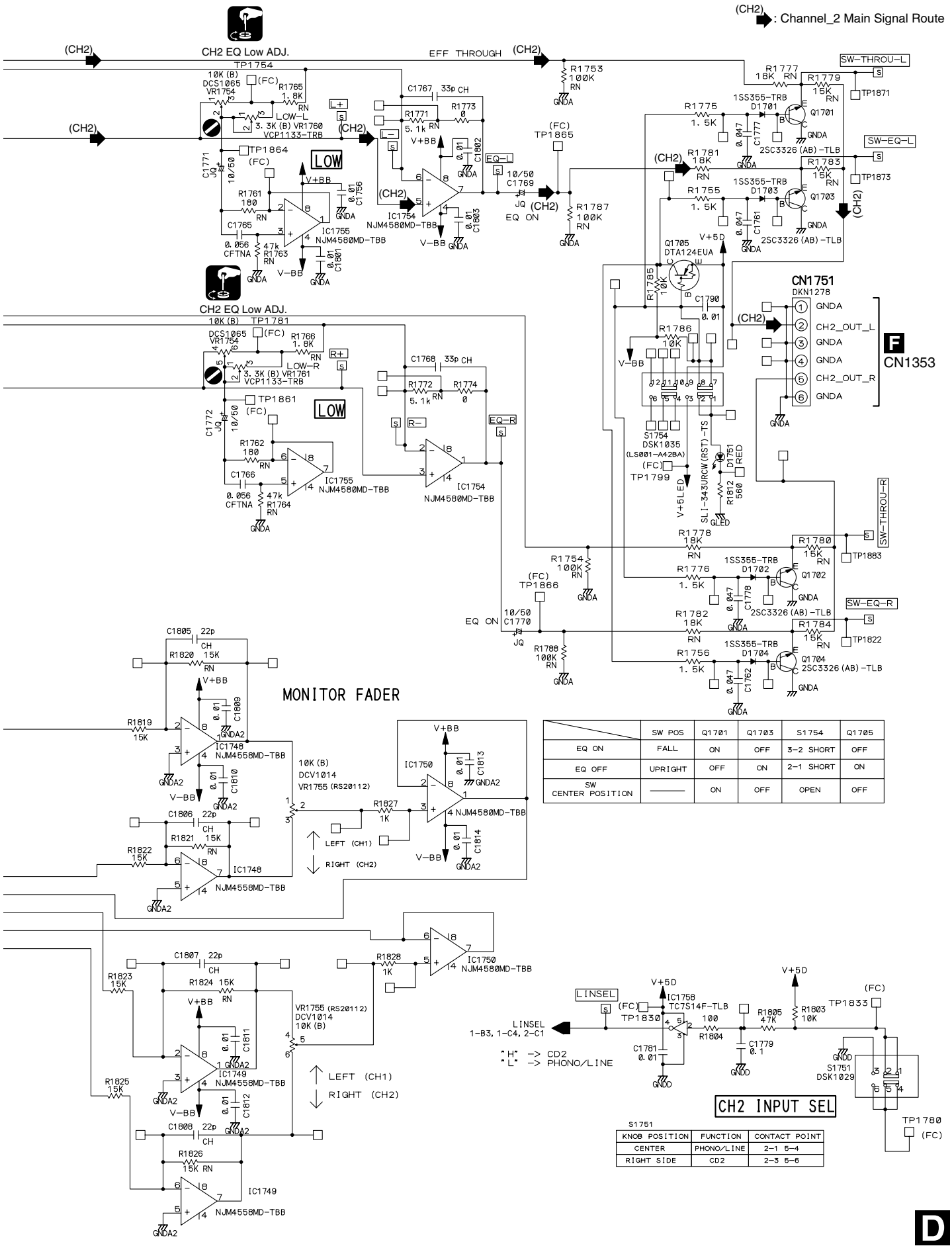

	SW POS	Q1701	Q1703	S1754	Q1705
EQ ON	FALL	ON	OFF	3-2 SHORT	OFF
EQ OFF	UPRIGHT	OFF	ON	2-1 SHORT	ON
SW CENTER POSITION	———	ON	OFF	OPEN	OFF

S1751

KNOB POSITION	FUNCTION	CONTACT POINT
CENTER	PHONO/LINE	2-1 5-4
RIGHT SIDE	CD2	2-3 5-6

3.13 C1BF ASSY

E C1BF ASSY (DWS1338)

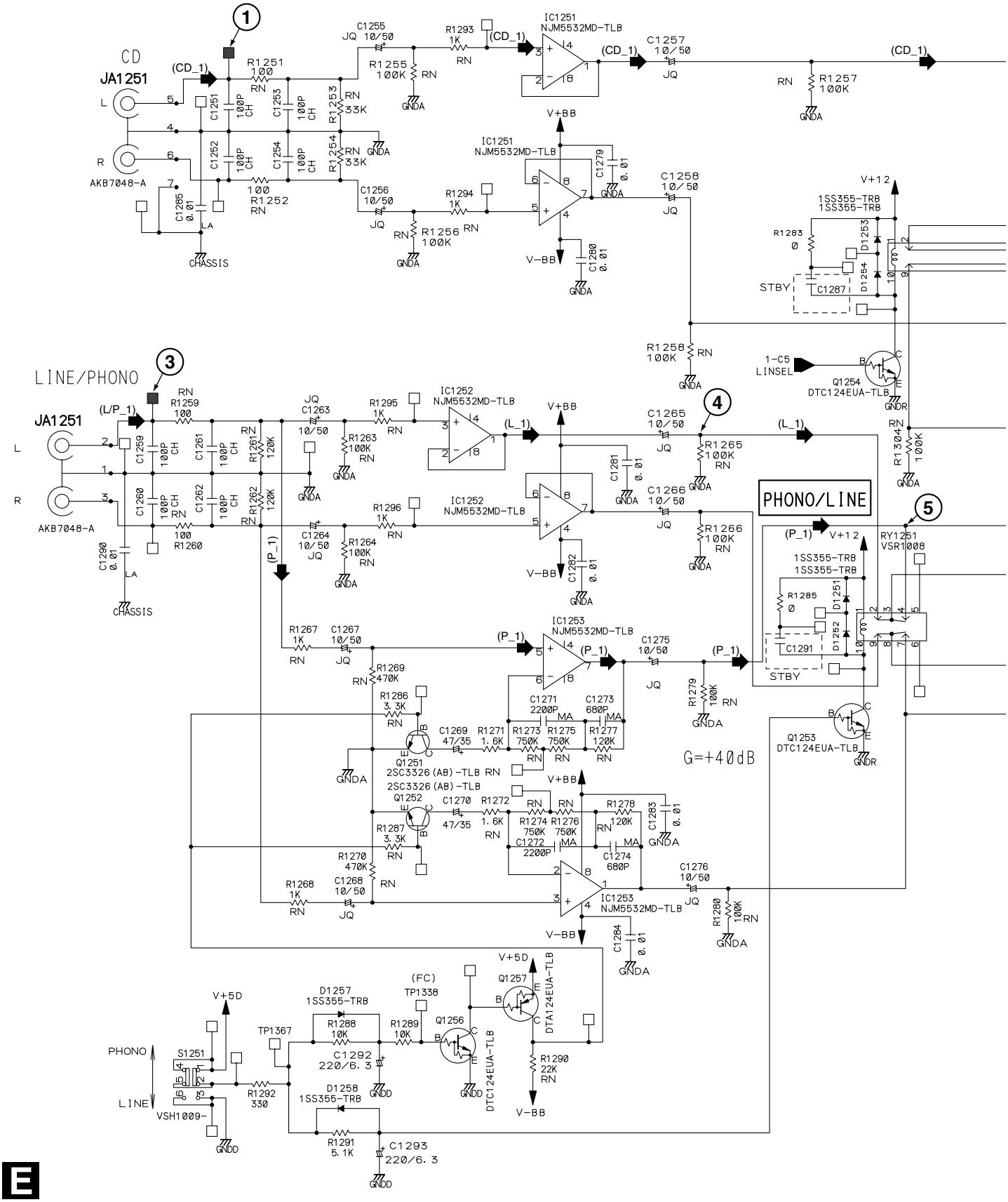

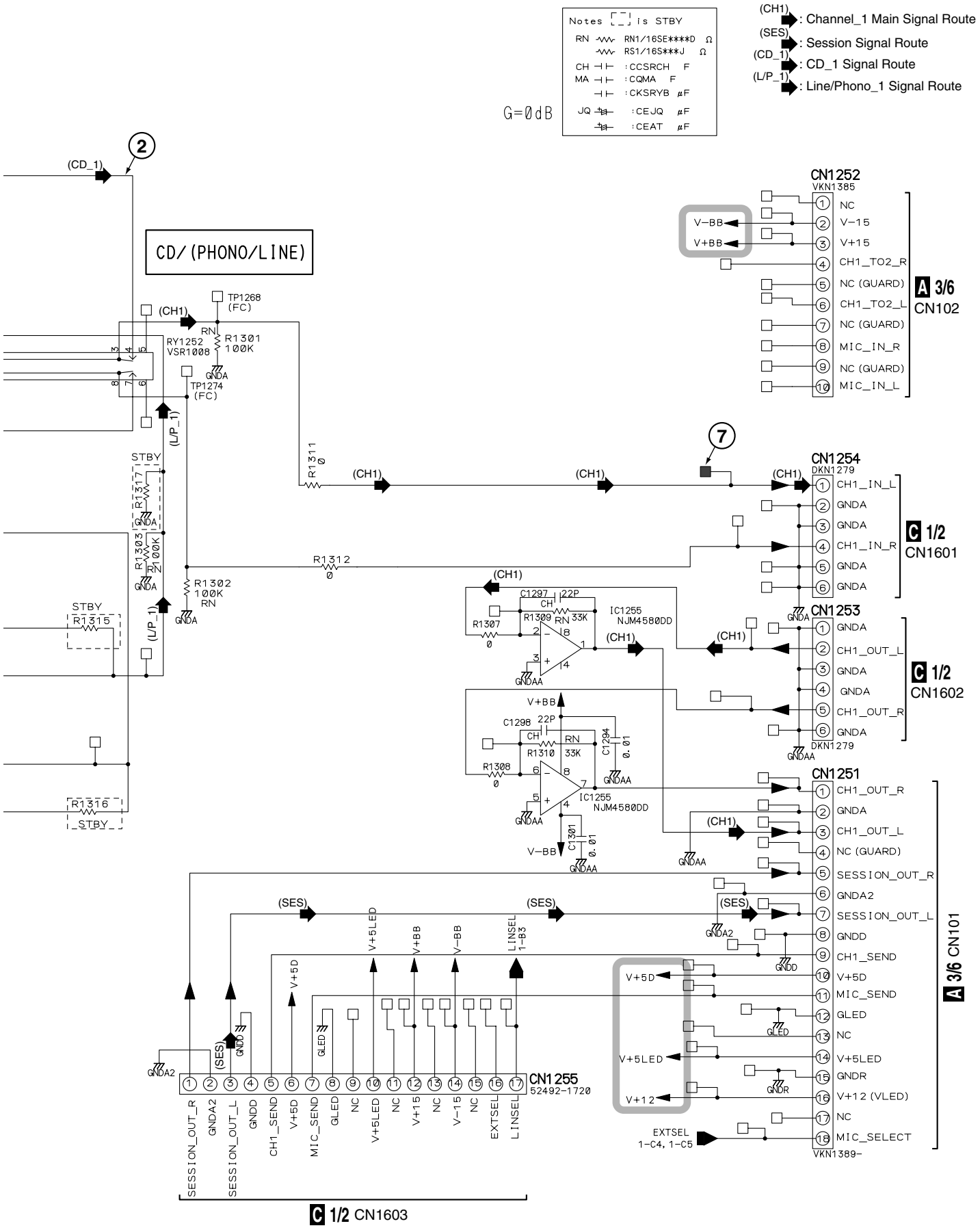
Notes [ ] is STBY
RN RN1/16SE****D Ω
RS1/16S***J Ω
CH :CCSRCH F
MA :CQMA F
:CKSRYB µF
JQ :CEJQ µF
:CEAT µF
G=0dB
(CH1): Channel_1 Main Signal Route
(SES): Session Signal Route
(CD_1): CD_1 Signal Route
(L/P_1): Line/Phono_1 Signal Route
CD/(PHONO/LINE)
(CD_1)
(CH1)
(SES)
(L/P_1)
TP1268 (FC)
TP1274 (FC)
RY1252 VSR1008
R1301 100K
R1302 100K
R1303 100K
R1305 100K
R1307 0
R1308 0
R1309 33K
R1310 33K
R1311 0
R1312 0
R1315
R1316
R1317
STBY
GNDA
GNDAA
GNDA2
GNDD
V+BB
V-BB
V+5D
V+5LED
V+12
V+15
V-15
GLED
GNDR
EXTSEL
LINSEL
C1297 22P
C1298 22P
C1294 0.01
C1301 0.01
IC1255 NJM4580DD
CN1252 VKN1385
1 NC
2 V-15
3 V+15
4 CH1_TO2_R
5 NC (GUARD)
6 CH1_TO2_L
7 NC (GUARD)
8 MIC_IN_R
9 NC (GUARD)
10 MIC_IN_L
A 3/6 CN102
CN1254 DKN1279
1 CH1_IN_L
2 GNDA
3 GNDA
4 CH1_IN_R
5 GNDA
6 GNDA
C 1/2 CN1601
CN1253 DKN1279
1 GNDA
2 CH1_OUT_L
3 GNDA
4 GNDA
5 CH1_OUT_R
6 GNDA
C 1/2 CN1602
CN1251 VKN1389-
1 CH1_OUT_R
2 GNDA
3 CH1_OUT_L
4 NC (GUARD)
5 SESSION_OUT_R
6 GNDA2
7 SESSION_OUT_L
8 GNDD
9 CH1_SEND
10 V+5D
11 MIC_SEND
12 GLED
13 NC
14 V+5LED
15 GNDR
16 V+12 (VLED)
17 NC
18 MIC_SELECT
A 3/6 CN101
CN1255 52492-1720
1 SESSION_OUT_R
2 GNDA2
3 SESSION_OUT_L
4 GNDD
5 CH1_SEND
6 V+5D
7 MIC_SEND
8 GLED
9 NC
10 V+5LED
11 NC
12 V+15
13 NC
14 V-15
15 NC
16 EXTSEL
17 LINSEL
C 1/2 CN1603

3.14 C2BF ASSY

F C2BF ASSY (DWS1339)

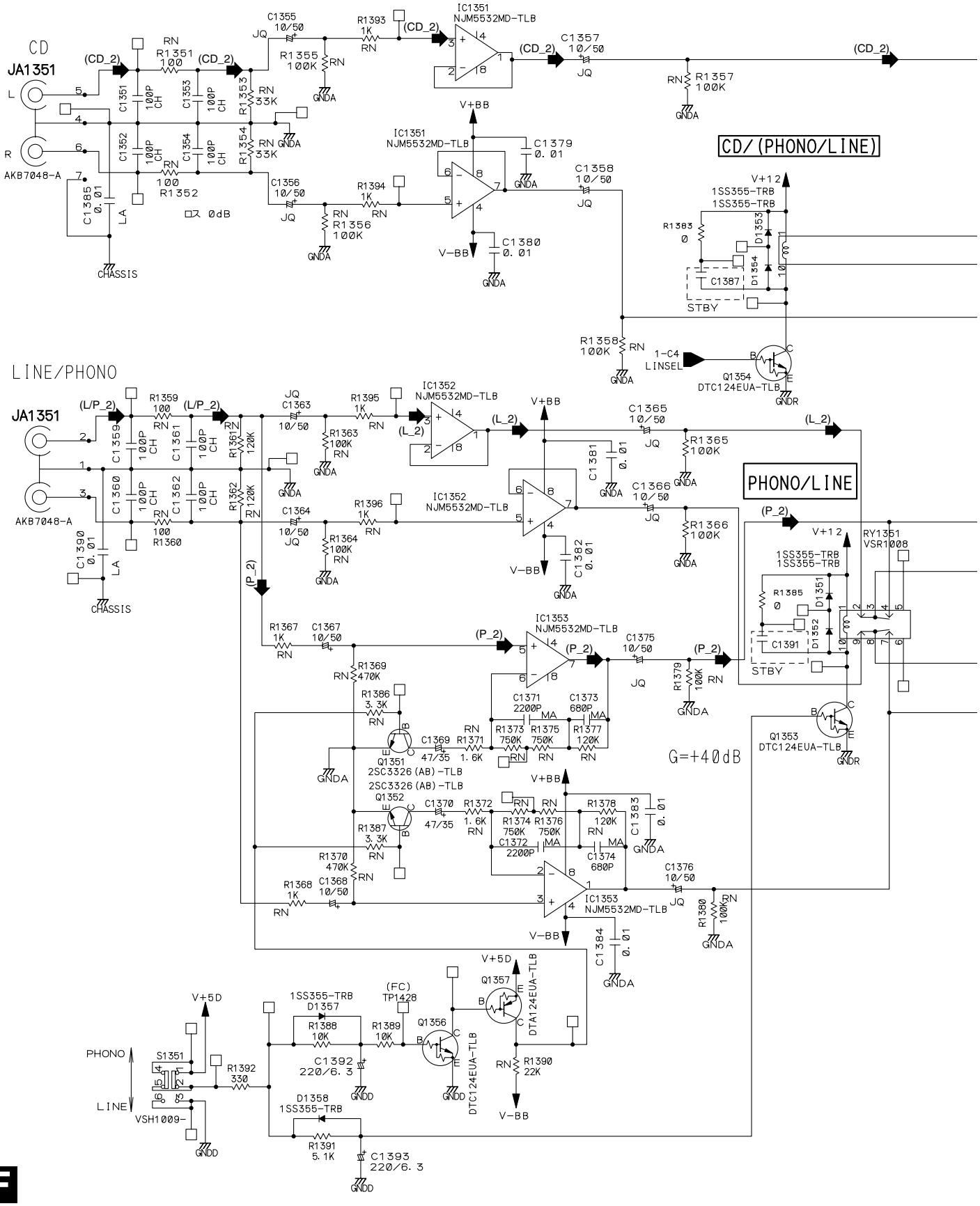

(CH2) : Channel_2 Main Signal Route
(CD_2) : CD_2 Signal Route
(L/P_2) : Line/Phono_2 Signal Route

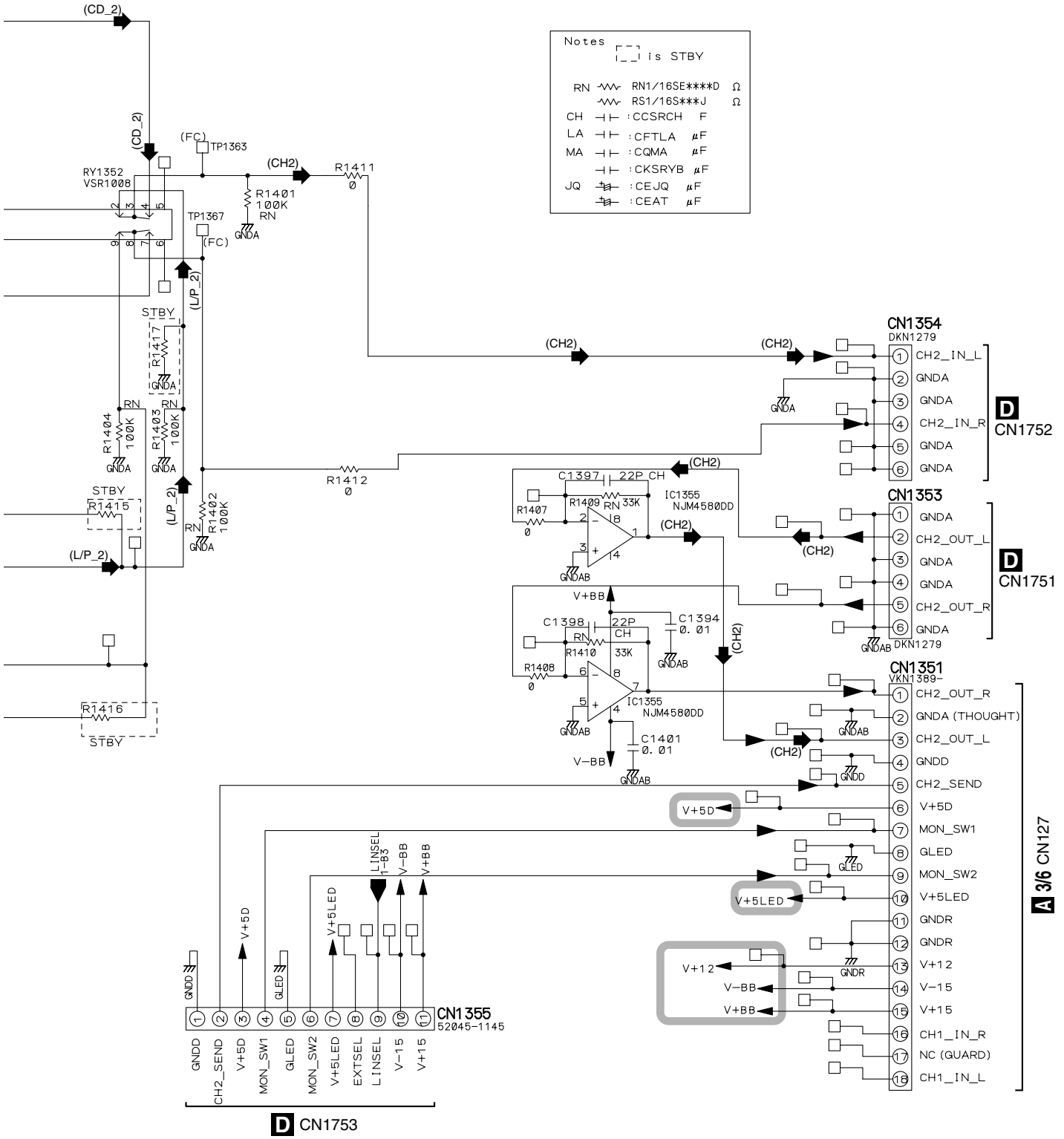

3.15 MICB ASSY

G MICB ASSY (DWX2363)

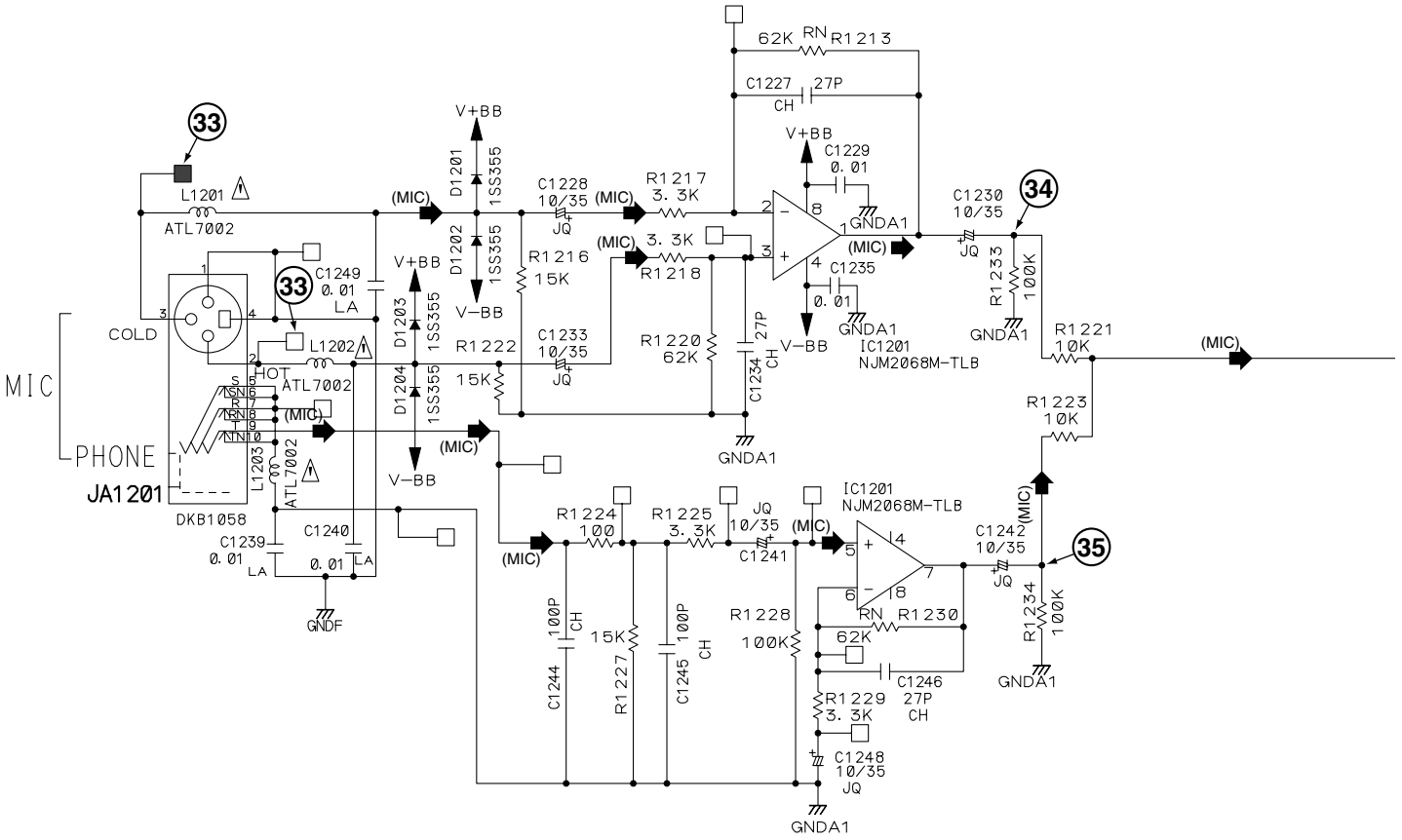

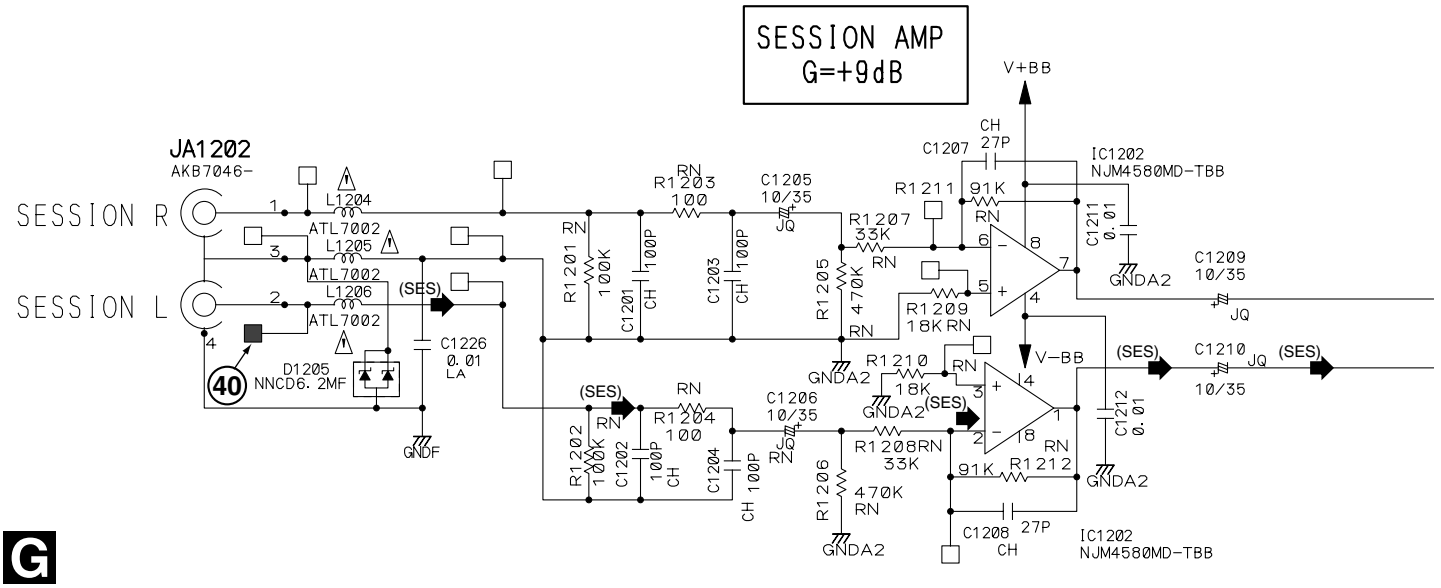

(MIC) : Microphone Signal Route
(SES) : Session Signal Route

Notes
[ ] is STBY

RN RN1/16SE***D Ω
RN (SC) RN1/16SC***D Ω
RS1/16S***J Ω
CH :CCSRCH F
LA :CFTLA µF
:CKSRYB µF
JQ :CEJQ µF
:CEAT µF

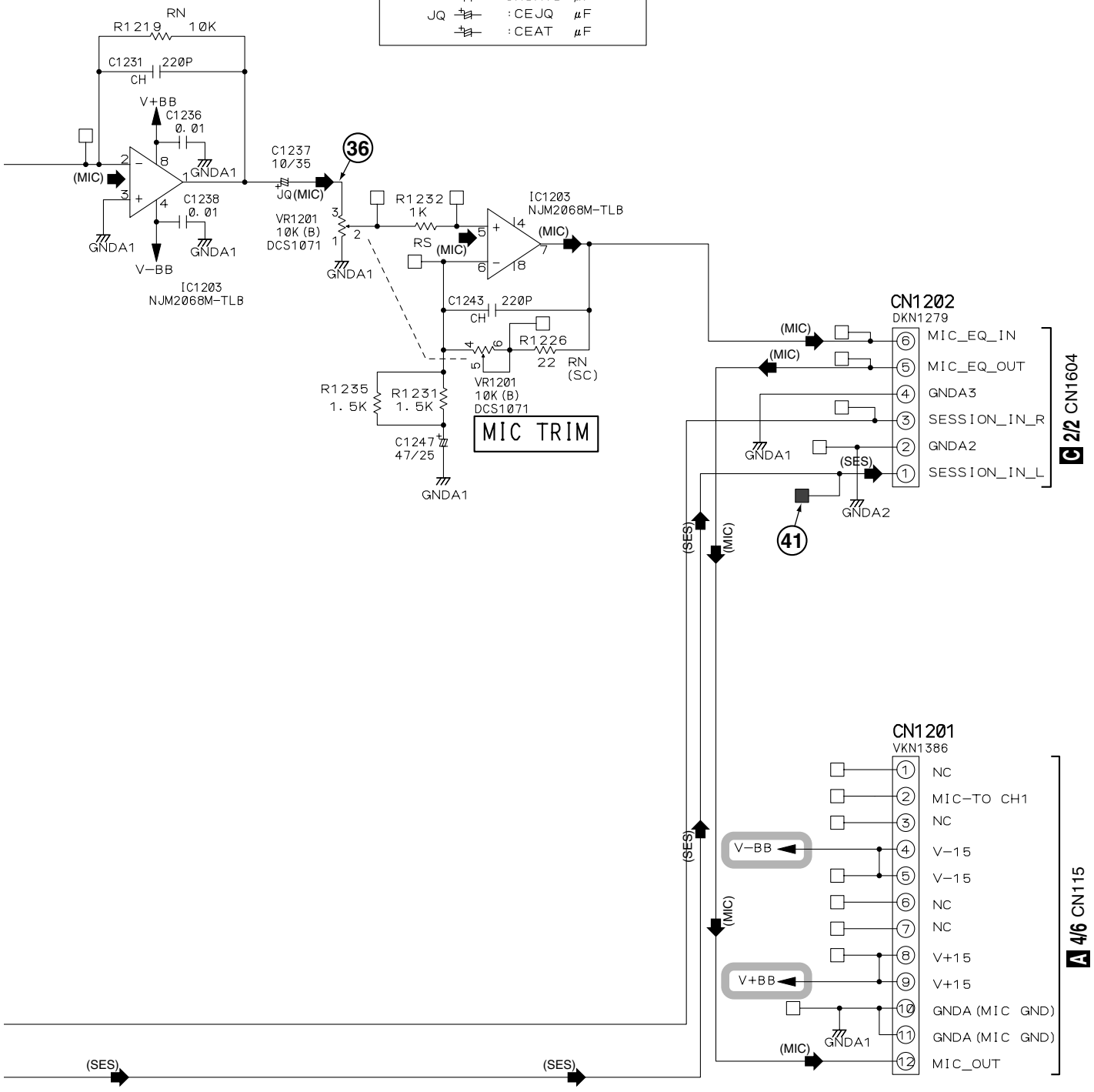

3.16 HPBO ASSY

H HPBO ASSY (DWX2319)

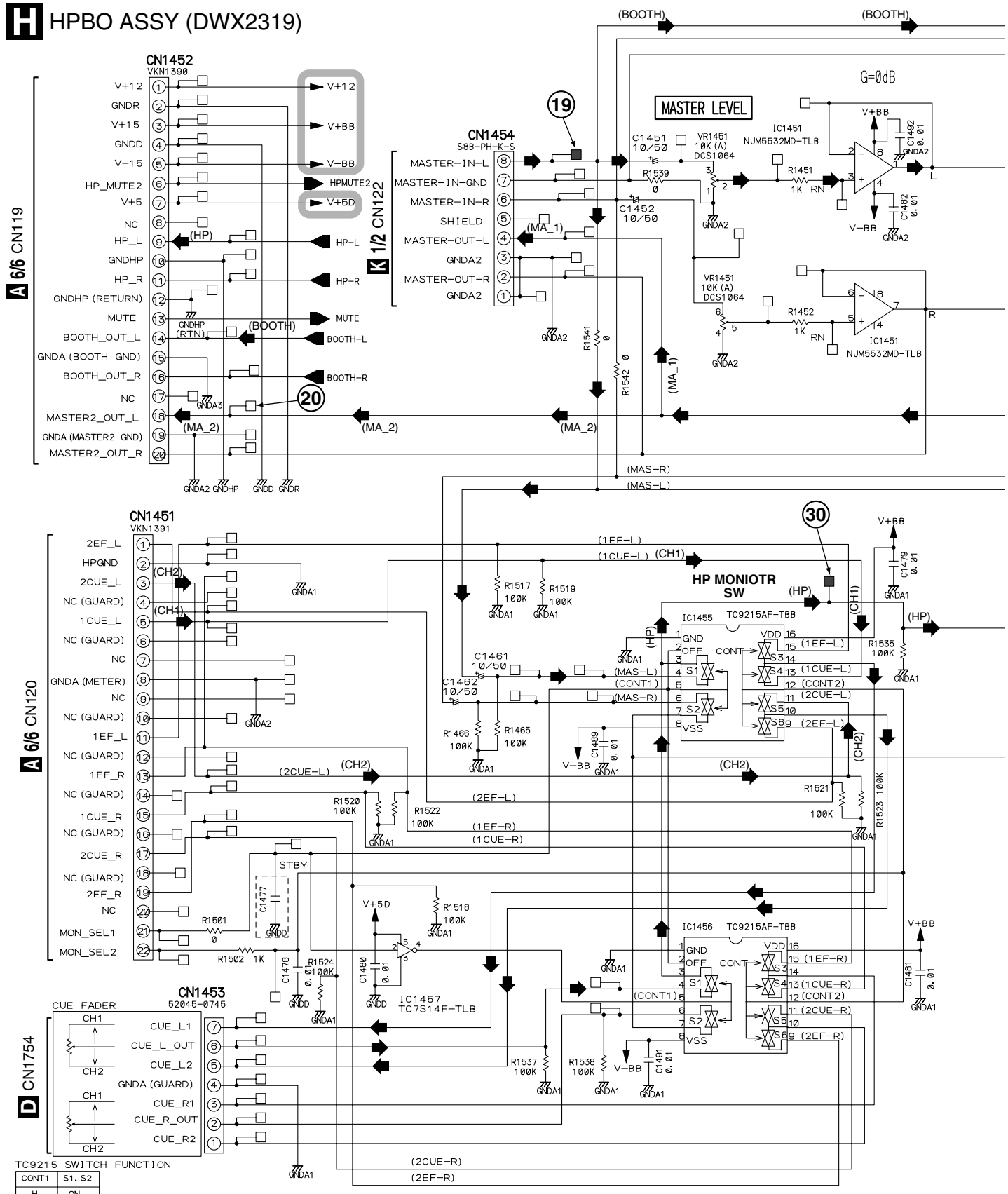

TC9215 SWITCH FUNCTION

CONT1	S1, S2
H	ON
L	OFF

CONT2	S3	S4	S5	S6
H	OFF	ON	ON	OFF
L	ON	OFF	OFF	ON

○ : SW ON
× : SW OFF

	IC1455						IC1455					
	S1	S2	S3	S4	S5	S6	S1	S2	S3	S4	S5	S6
MASTER	○	○	–	–	–	–	×	×	–	–	–	–
CUE	×	×	×	○	○	×	○	○	×	○	○	×
EFFECT	×	×	○	×	×	○	○	○	○	×	×	○

MICOM. CONTROL	MON-SEL1	MON-SEL2
MASTER	H	H
CUE	L	H
EFFECT	L	L

H

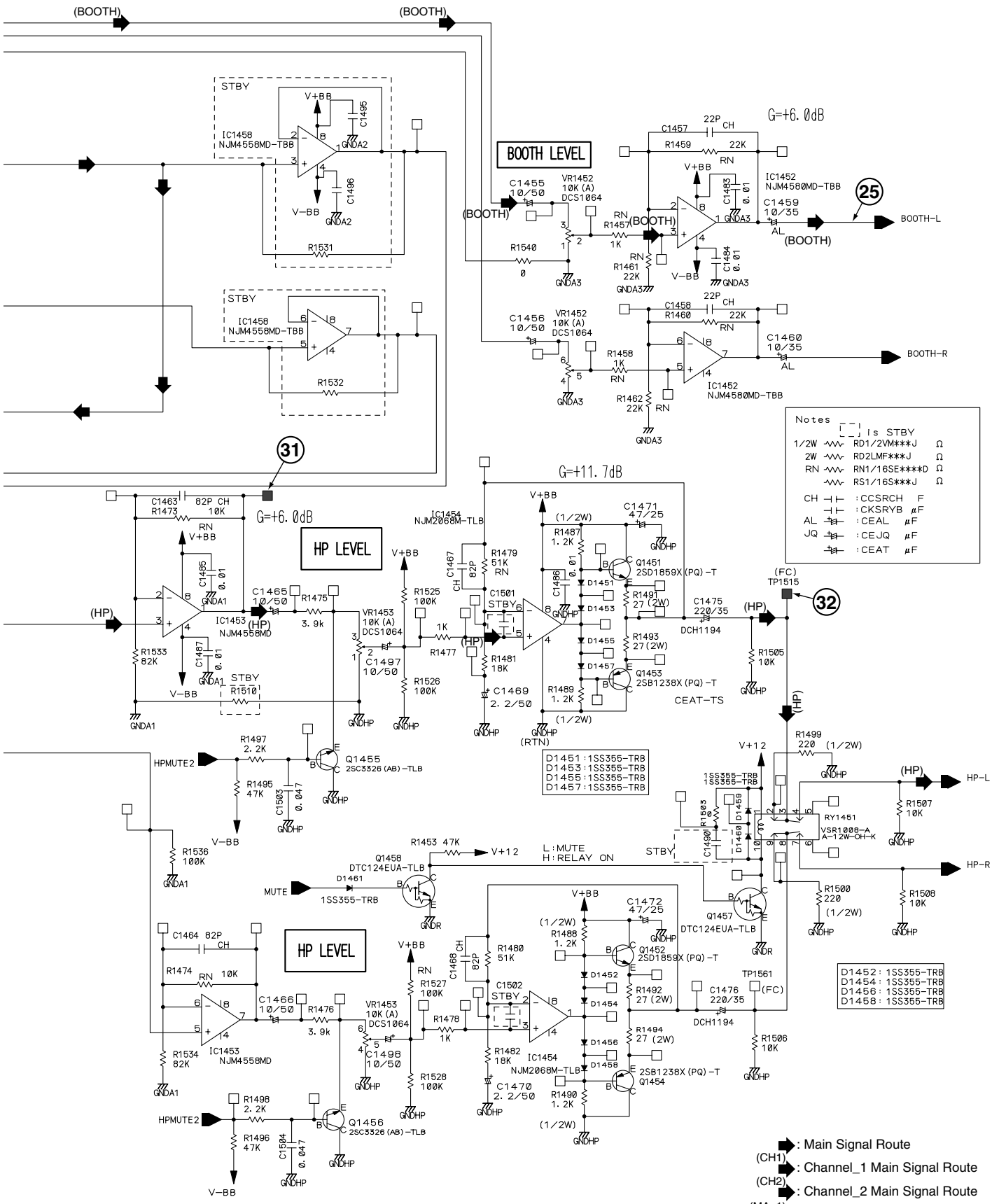
BOOTH LEVEL
HP LEVEL
HP LEVEL
G=+6.0dB
G=+11.7dB
G=+6.0dB
STBY
IC1458 NJM4558MD-TBB
IC1452 NJM4580MD-TBB
IC1453 NJM4558MD
IC1454 NJM2068M-TLB
VR1452 10K (A) DCS1064
VR1453 10K (A) DCS1064
Notes
[ ] is STBY
1/2W RD1/2VM***J Ω
2W RD2LMF***J Ω
RN RN1/16SE****D Ω
RS1/16S***J Ω
CH :CCSRCH F
:CKSRYB µF
AL :CEAL µF
JQ :CEJQ µF
:CEAT µF
D1451 :1SS355-TRB
D1453 :1SS355-TRB
D1455 :1SS355-TRB
D1457 :1SS355-TRB
D1452 :1SS355-TRB
D1454 :1SS355-TRB
D1456 :1SS355-TRB
D1458 :1SS355-TRB
L :MUTE
H :RELAY ON
CEAT-TS
(BOOTH)
(HP)
(RTN)
(FC)
BOOTH-L
BOOTH-R
HP-L
HP-R
HPMUTE2
MUTE
V+BB
V+12
V-BB
GNDA1
GNDA2
GNDA3
GNDHP
GNDR
25
31
32
: Main Signal Route
(CH1) : Channel_1 Main Signal Route
(CH2) : Channel_2 Main Signal Route
(MA_1) : MASTER_1 Signal Route
(MA_2) : MASTER_2 Signal Route
(BOOTH) : Booth Signal Route
(HP) : Phones Signal Route

3.17 FDVR ASSY

FDVR ASSY (DWX2320)

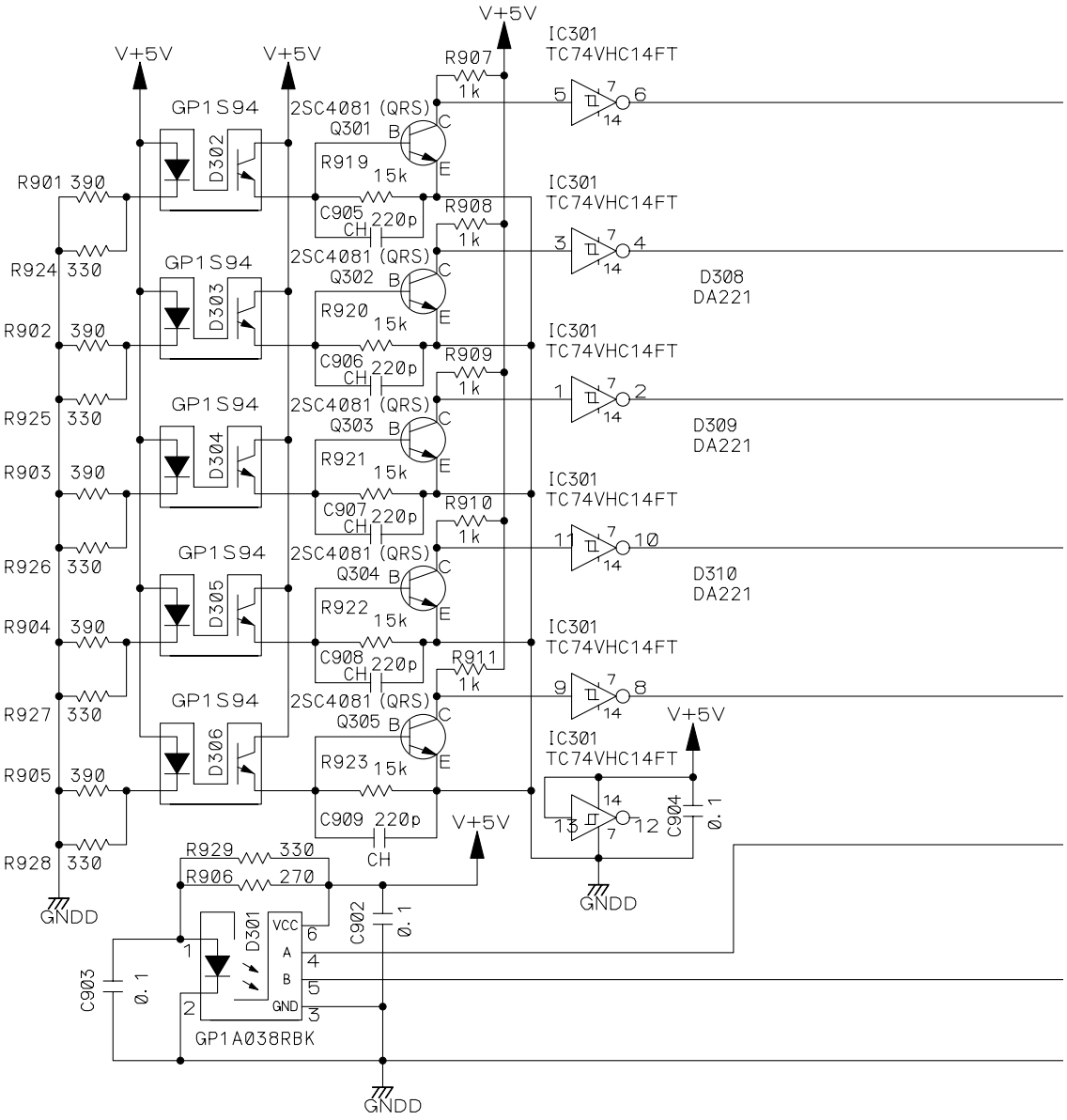

Notes

is STBY

RS1/16***J Ω

CH : CCSRCH F

: CKSRYB μF

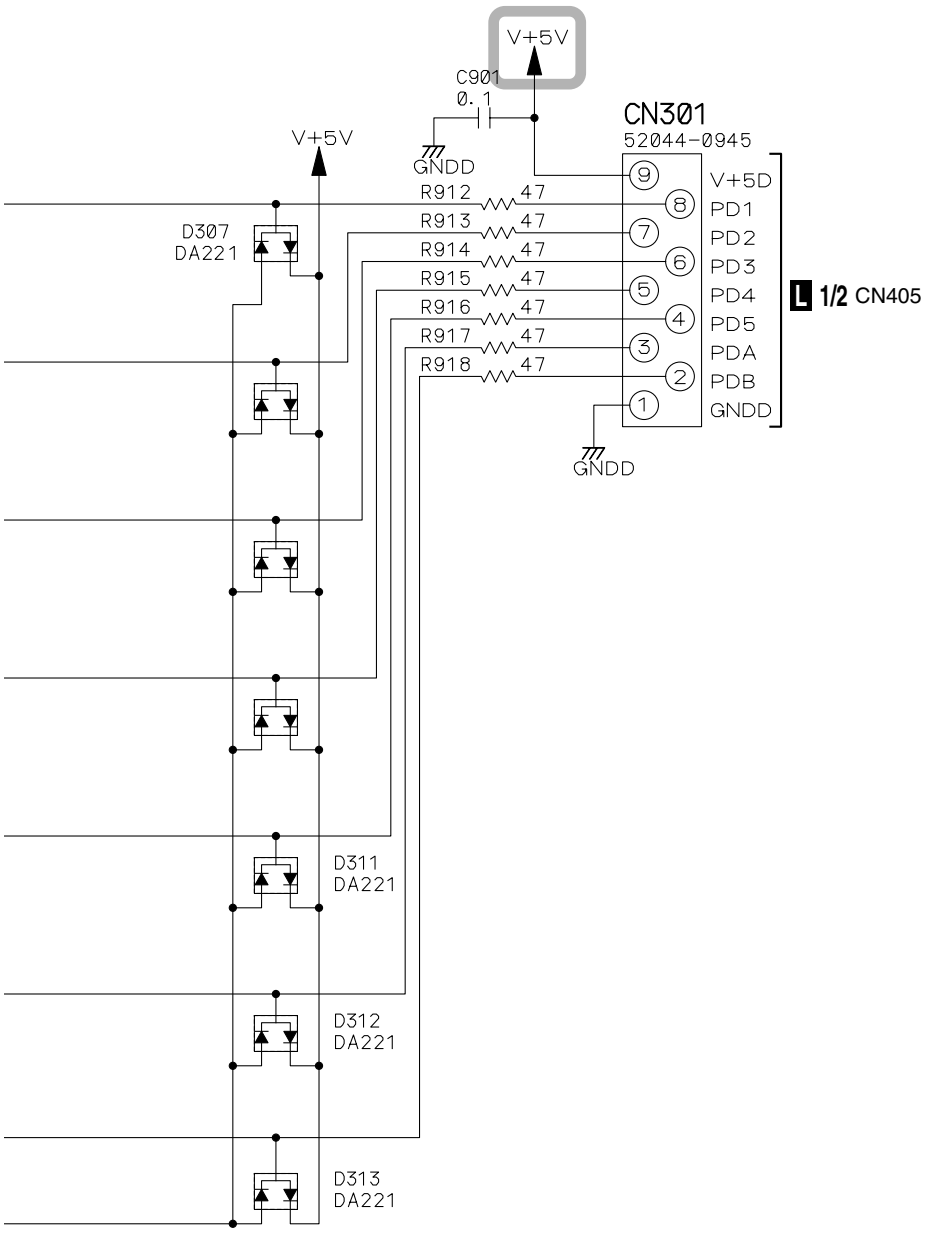
V+5V
C901
0.1
GNDD
V+5V
CN301
52044-0945
9 V+5D
8 PD1
7 PD2
6 PD3
5 PD4
4 PD5
3 PDA
2 PDB
1 GNDD
GNDD
R912 47
R913 47
R914 47
R915 47
R916 47
R917 47
R918 47
D307
DA221
D311
DA221
D312
DA221
D313
DA221
L 1/2 CN405

3.18 SDRT ASSY

J SDRT ASSY (DWX2321)

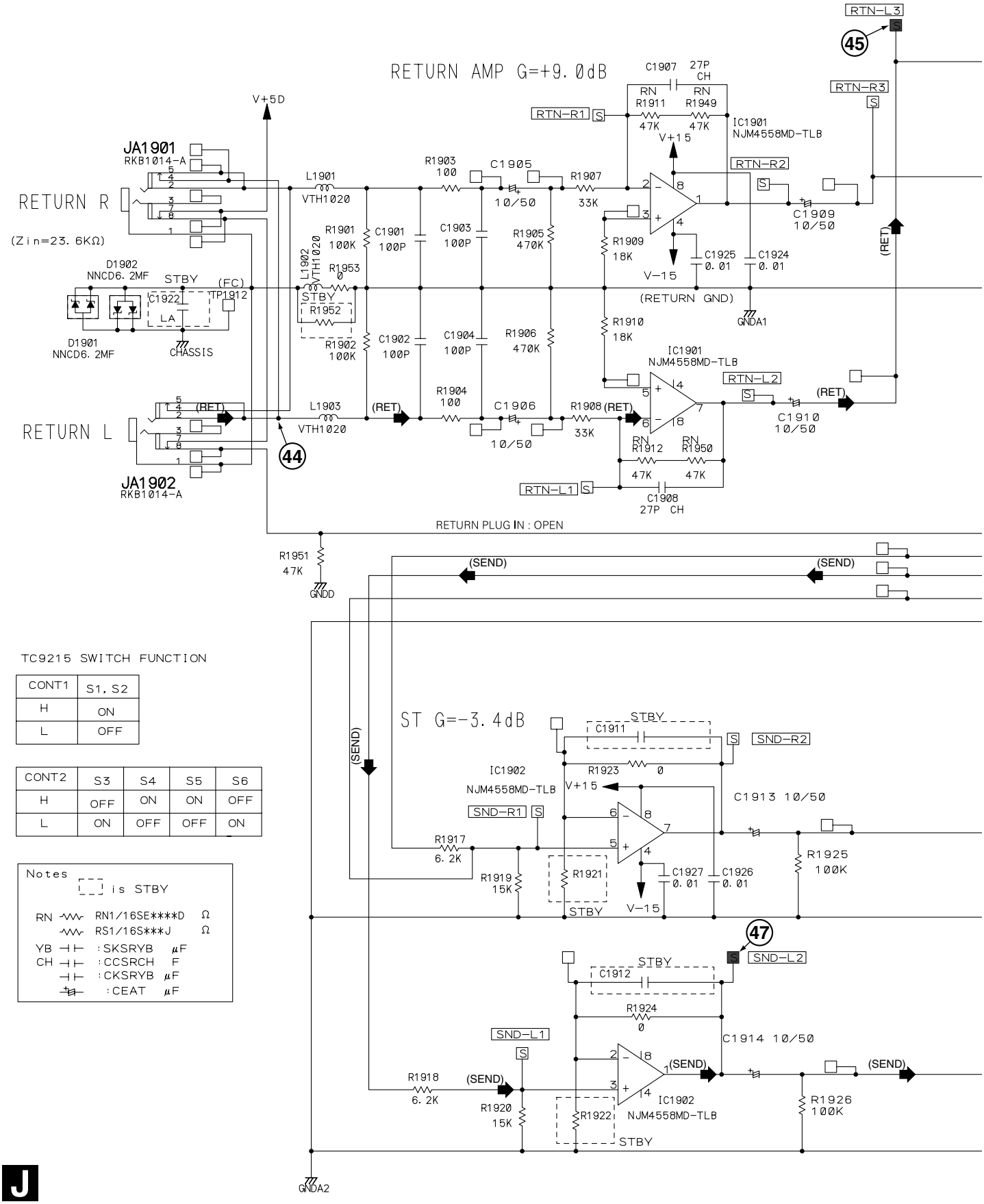

TC9215 SWITCH FUNCTION

CONT1	S1, S2
H	ON
L	OFF

CONT2	S3	S4	S5	S6
H	OFF	ON	ON	OFF
L	ON	OFF	OFF	ON

Notes

[ ] is STBY

RN RN1/16SE****D Ω
RS1/16S***J Ω
YB :SKSRYB μF
CH :CCSRCH F
:CKSRYB μF
:CEAT μF

(SEND) : Send Signal Route
(RET) : Return Signal Route

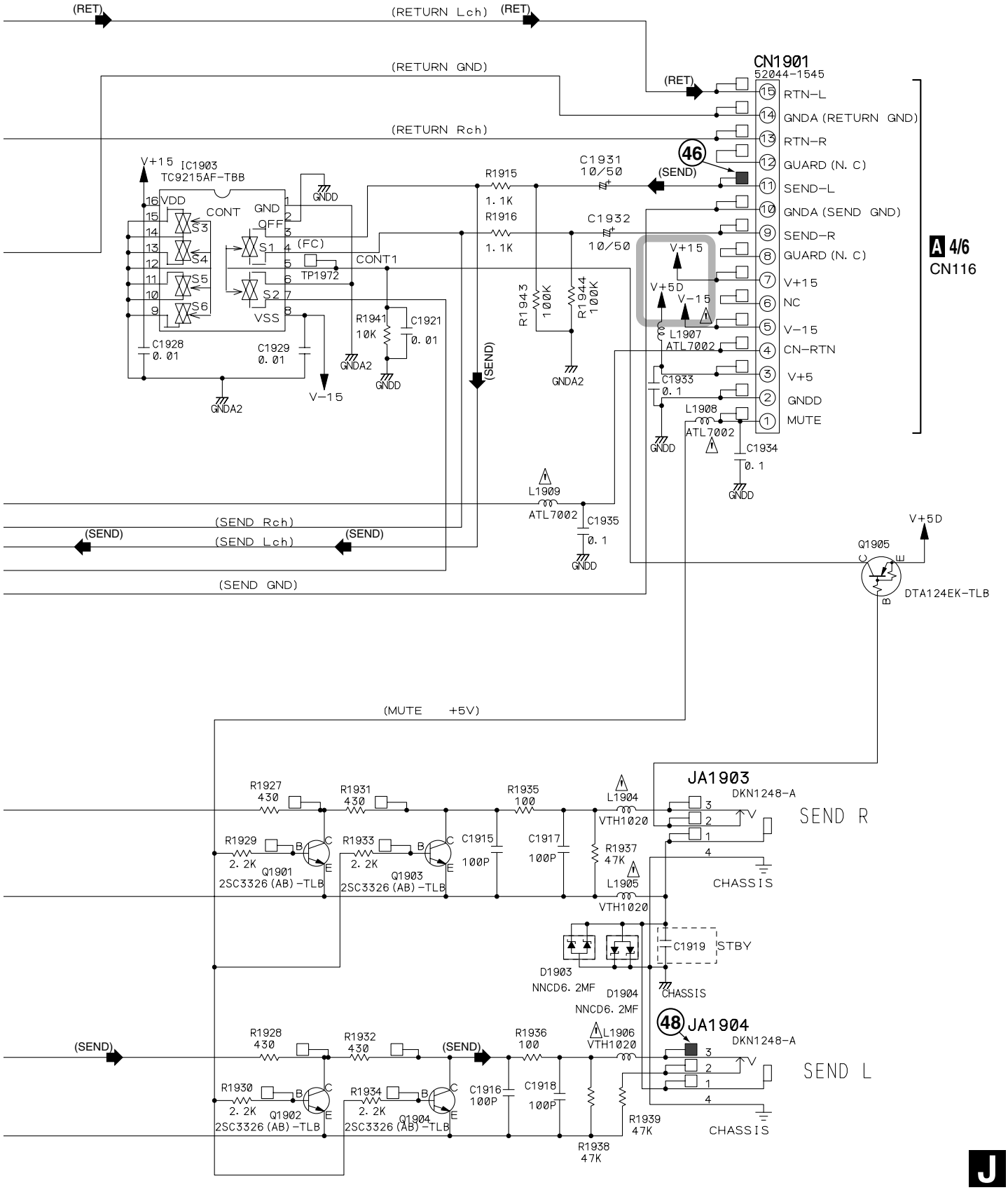

3.19 XLR ASSY (1/2)

K 1/2 XLR ASSY (DWX2322)

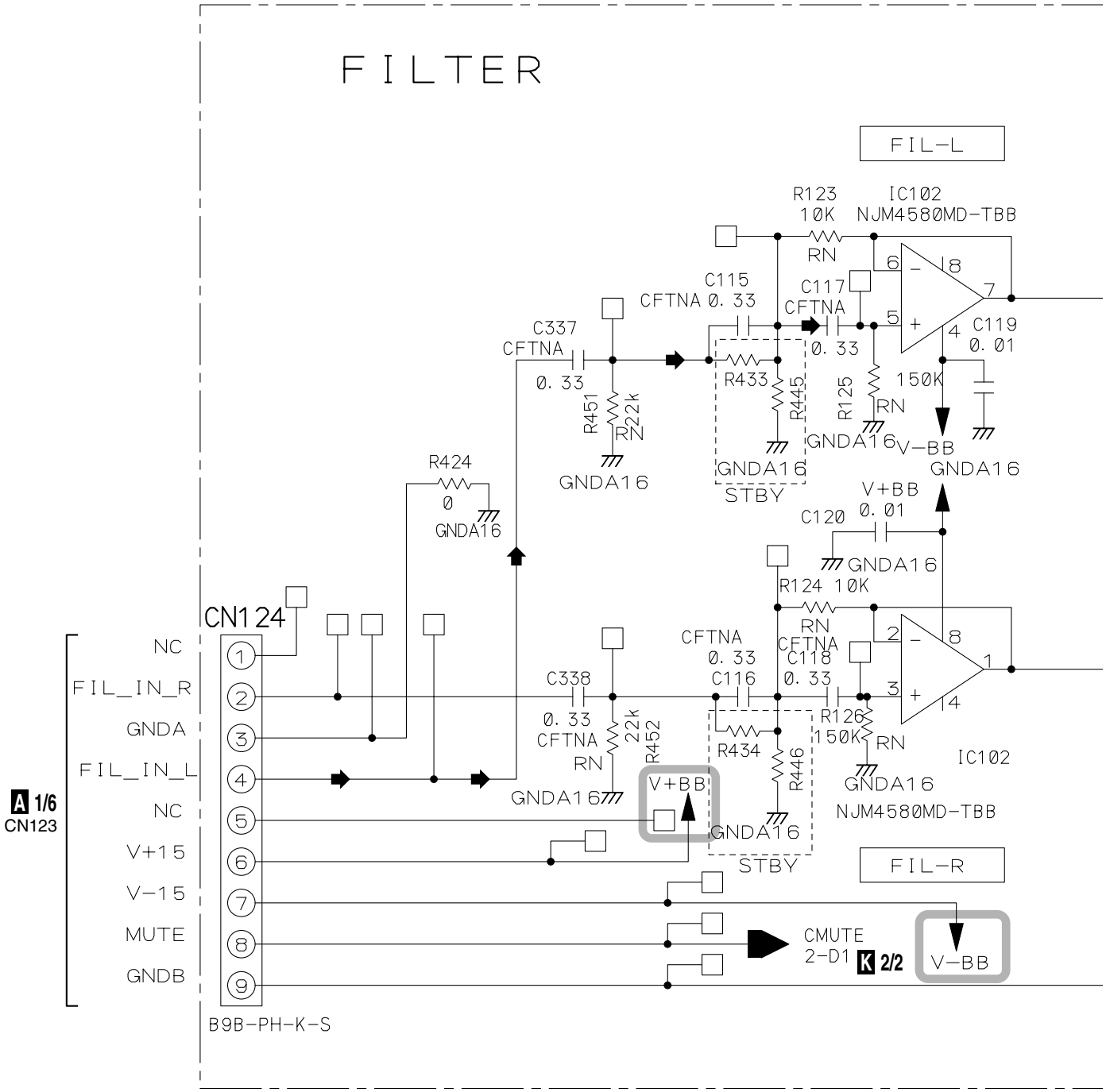

: Main Signal Route

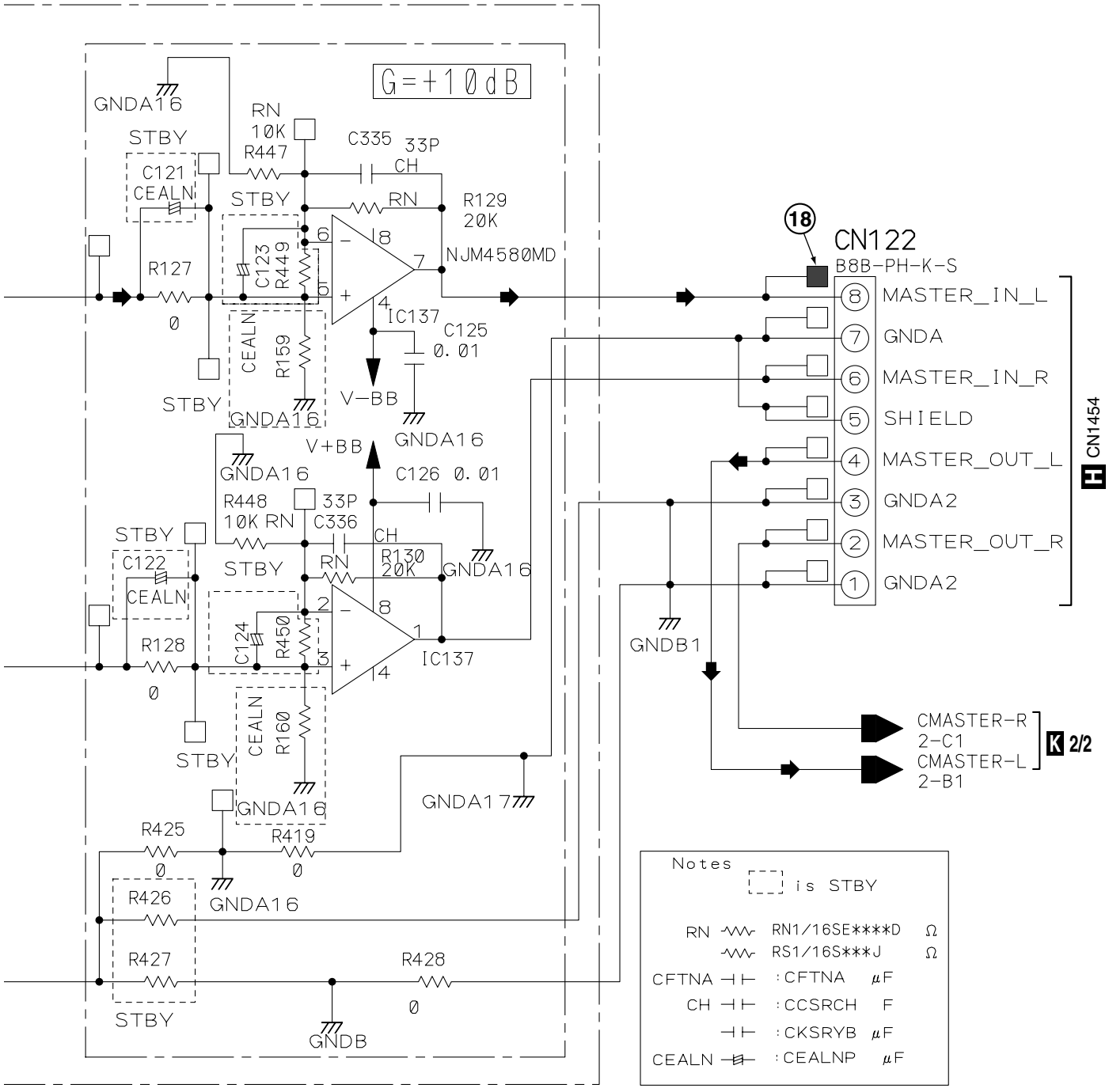

K 1/2

3.20 XLR ASSY (2/2)

K 2/2 XLR ASSY (DWX2322)

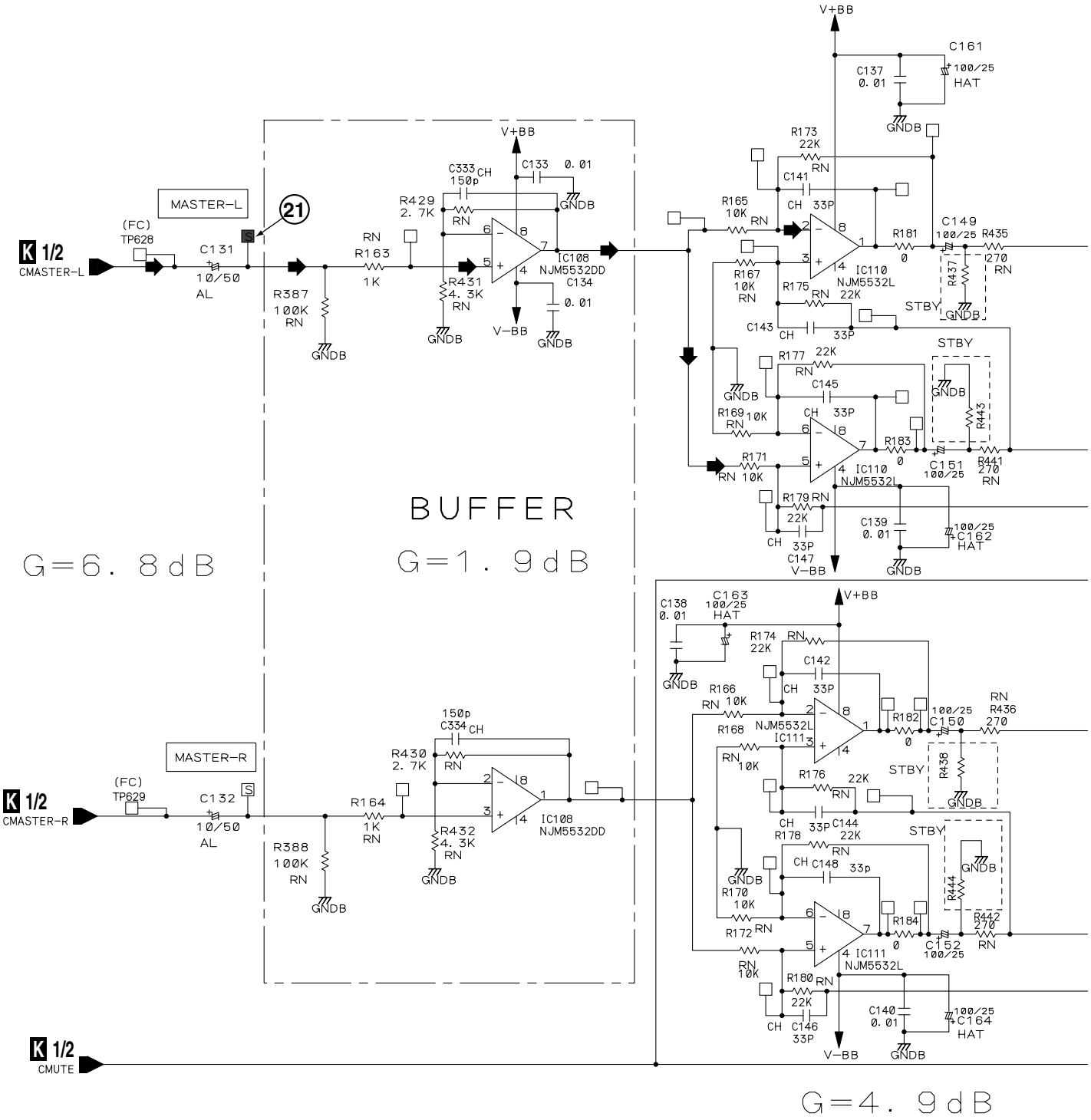

: Main Signal Route

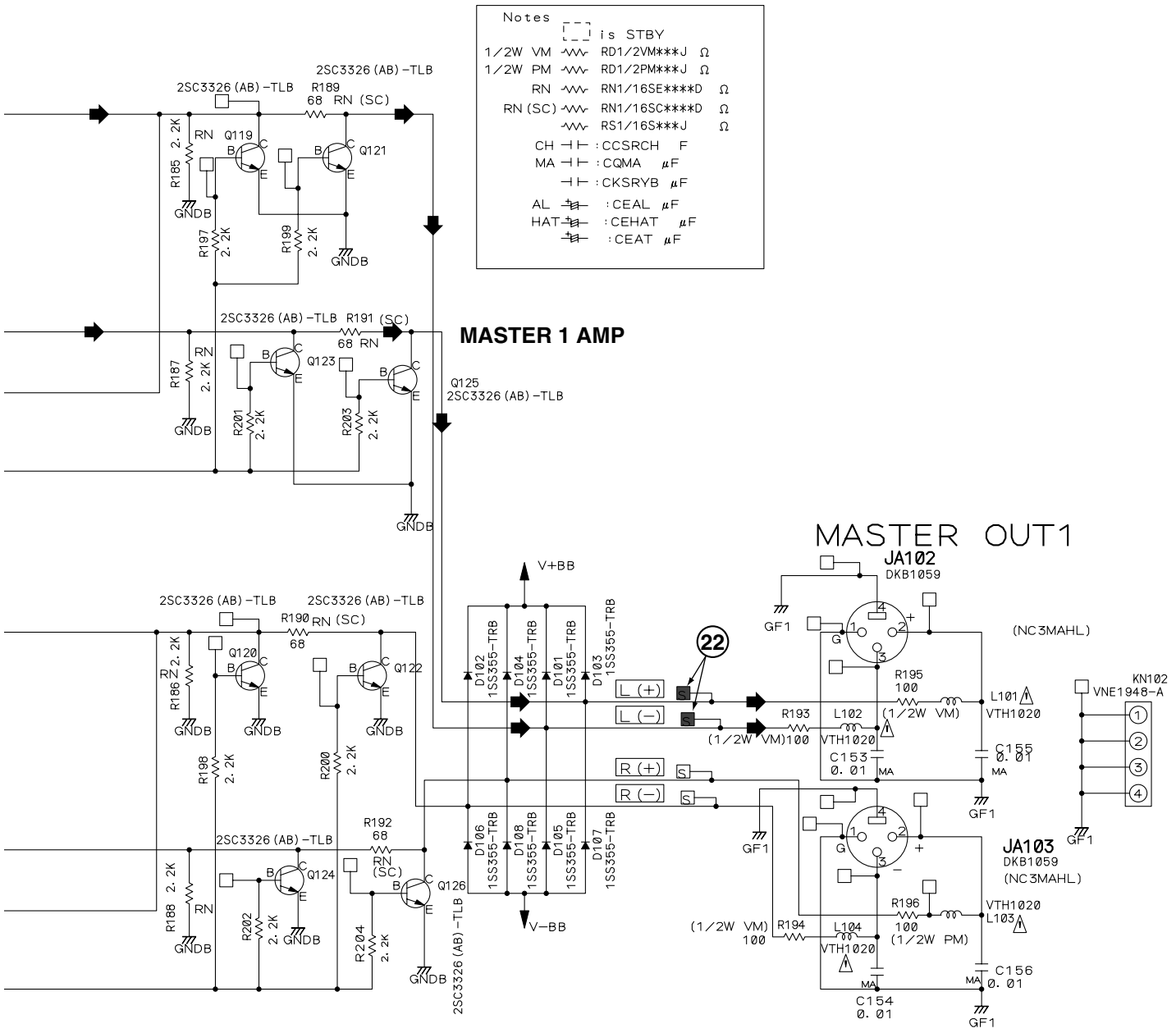

3.21 LVMR (1/2), C1TR, C2TR, FVA1 and FVA2 ASSYS

L 1/2 LVMR ASSY (DWS1330)

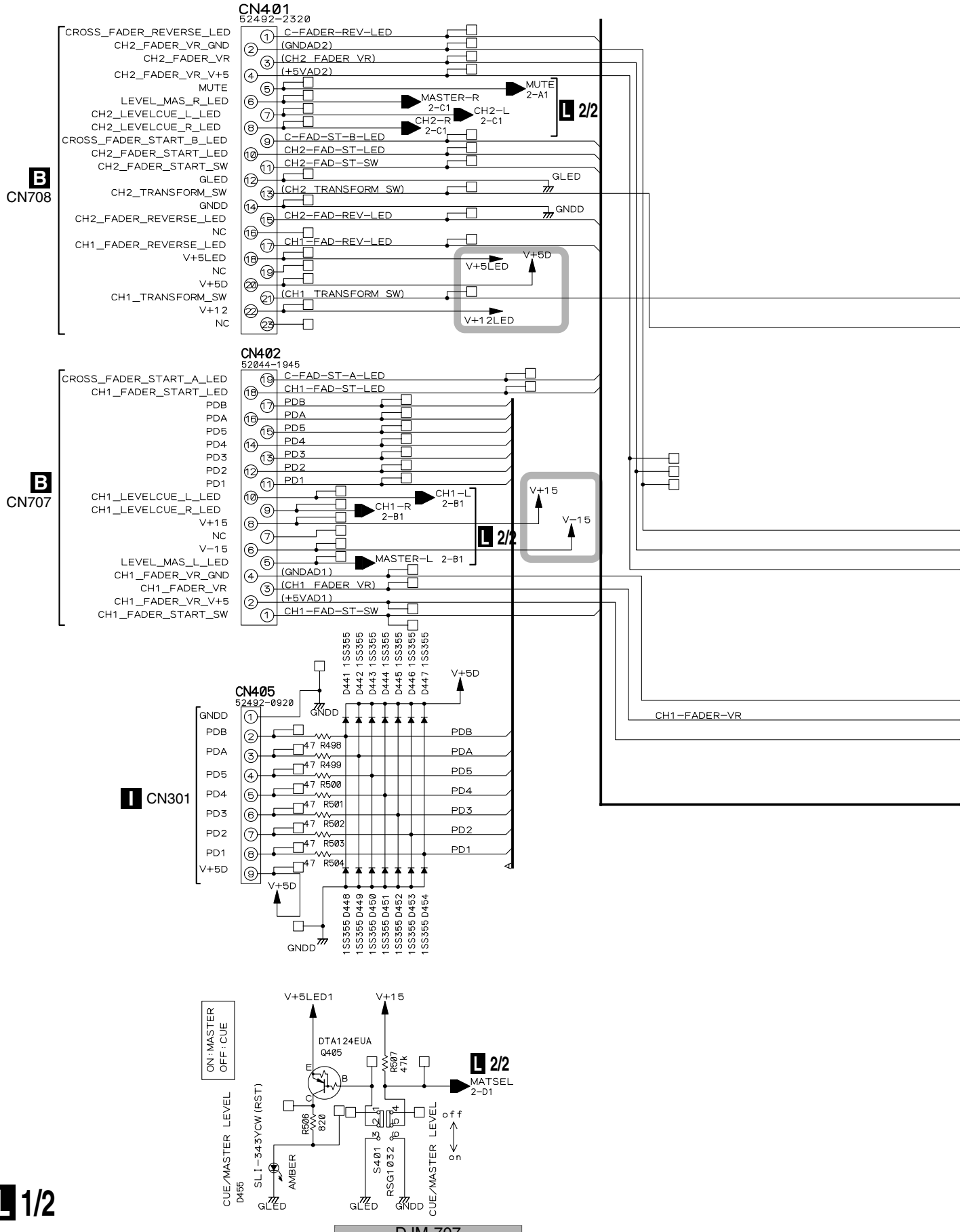

OFF 2-1 HI
ON 2-3 LO

M C1TR ASSY (DWS1334)

N C2TR ASSY (DWS1335)

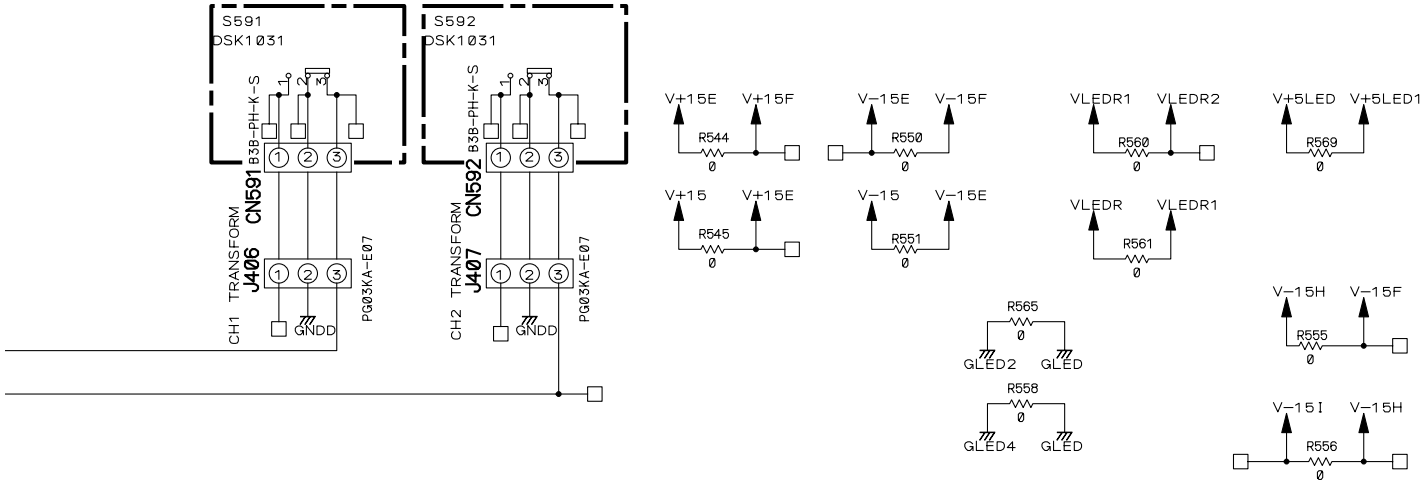

Notes
[ ] is STBY
RS1/16S***J Ω
CH : CCSRCH F
: CKSRYB μF
: CEAT μF

P FVA2 ASSY (DWS2324)

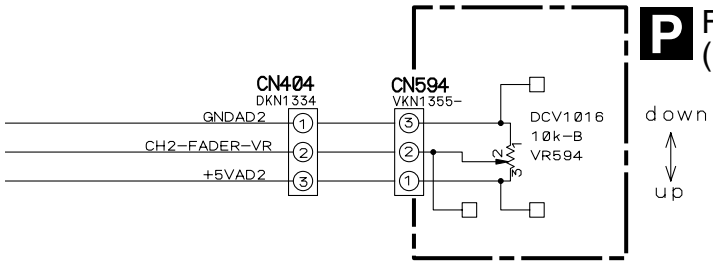

O FVA1 ASSY (DWS2323)

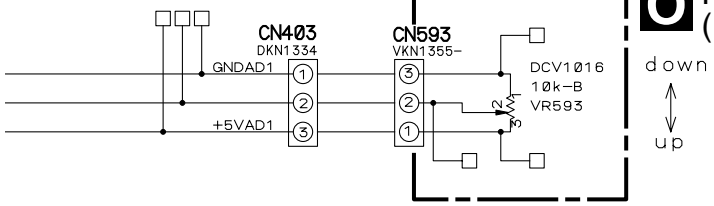

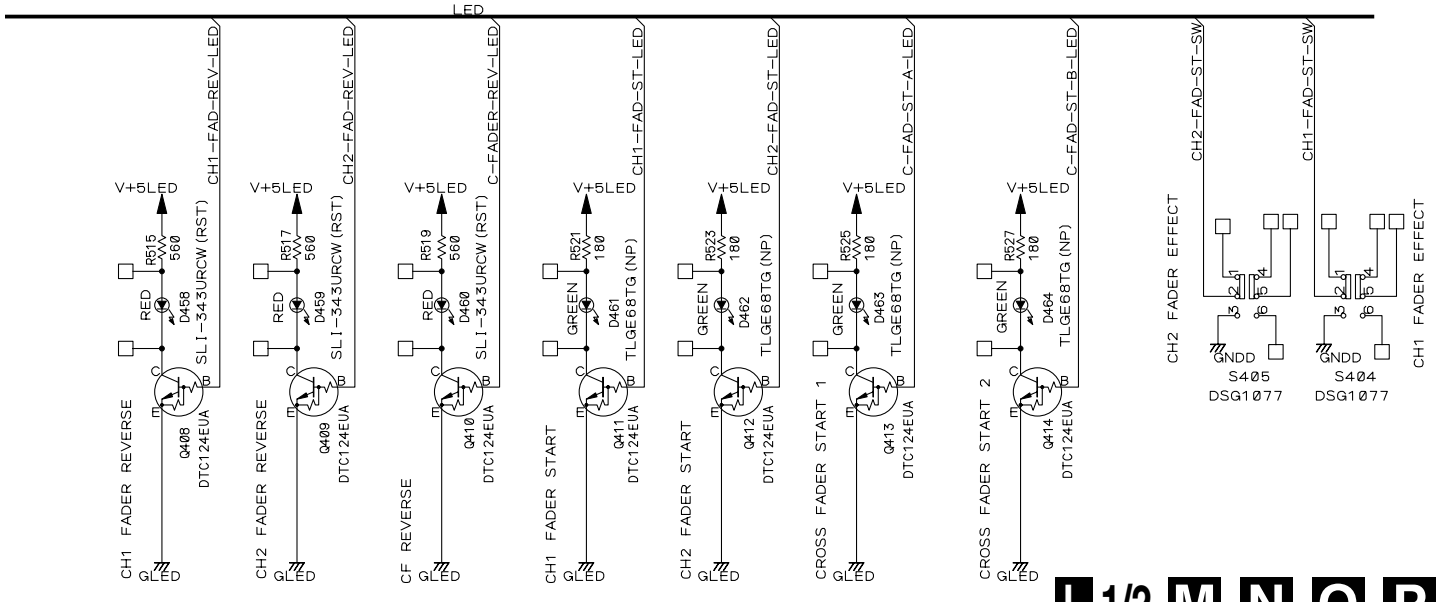

L 1/2 M N O P

3.22 LVMR ASSY (2/2)

L 2/2 LVMR ASSY (DWS1330)

Mute	VLEDL	VLEDR
H	OPEN	OPEN
L	+12V	+12V

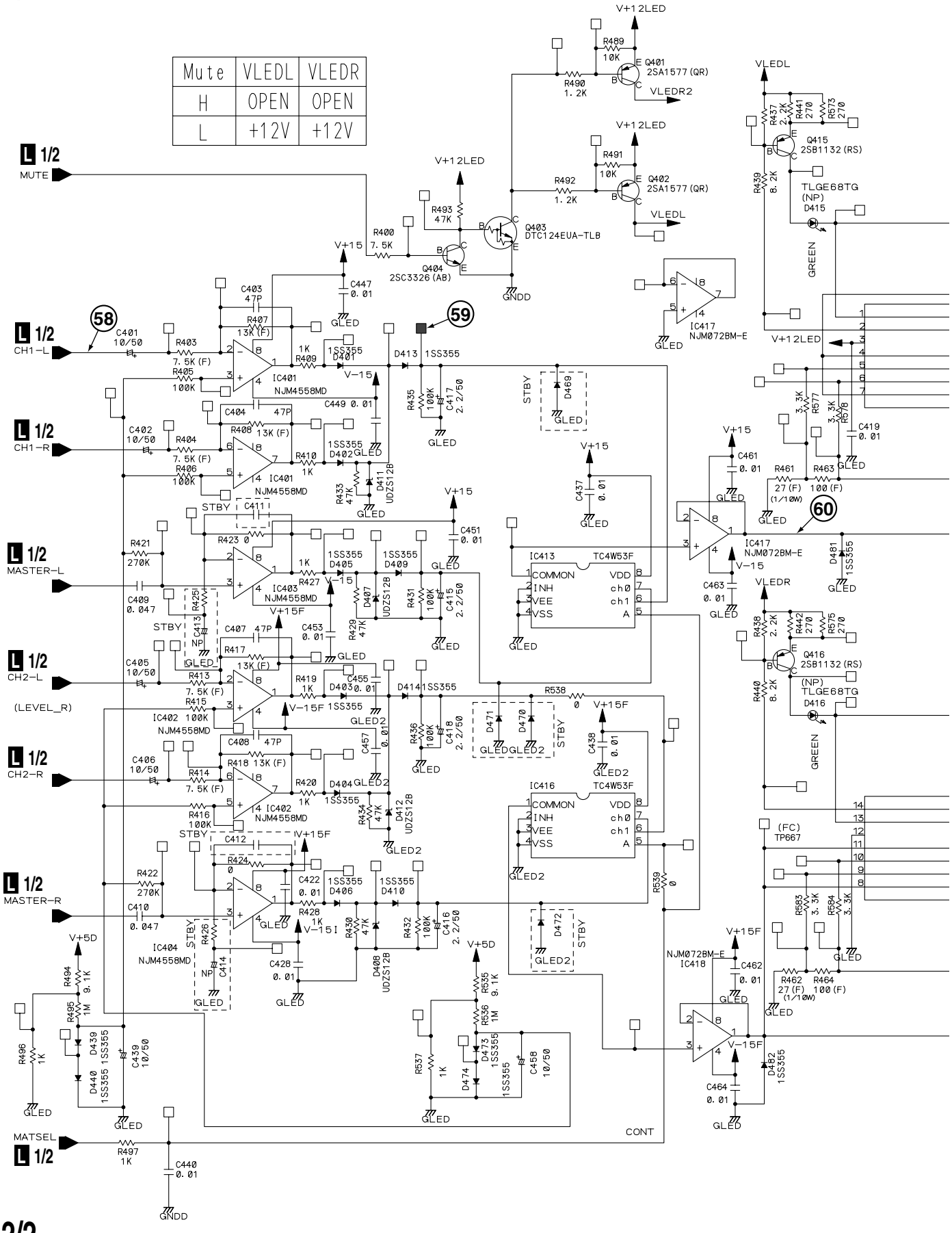

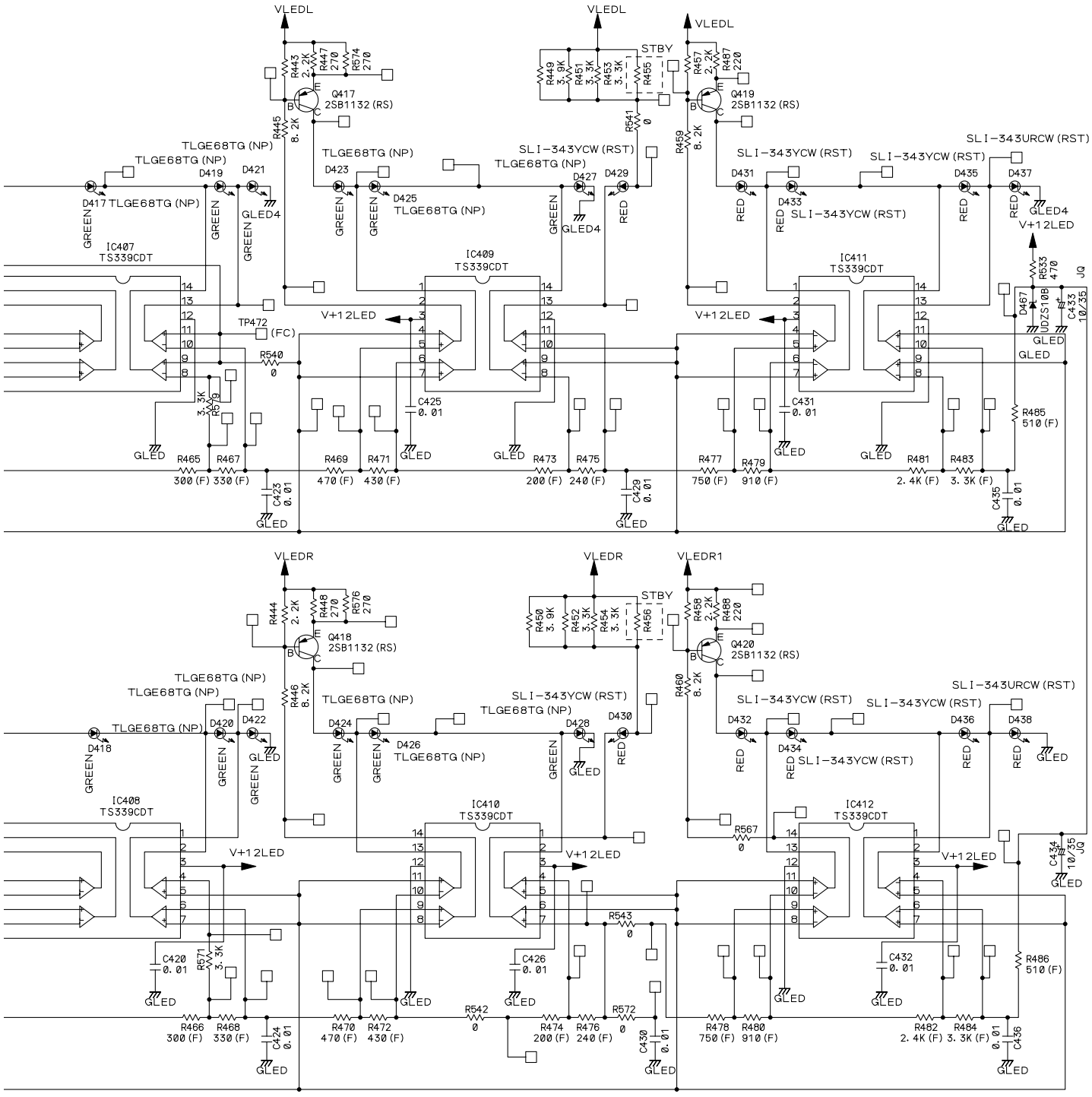

Notes
[ ] Is STBY
F RS1/16S****F Ω
F(1/10W) RS1/10S****F Ω
RS1/16S***J Ω
CH :CCSRCH F
:CKSRYB µF
JQ :CEJQ µF
:CEAT µF

CONT	S3	S4	S5	S6
H	OFF	ON	ON	OFF
L	ON	OFF	OFF	ON

L 2/2

3.23 CFVR, RVSW and FSSW ASSYS

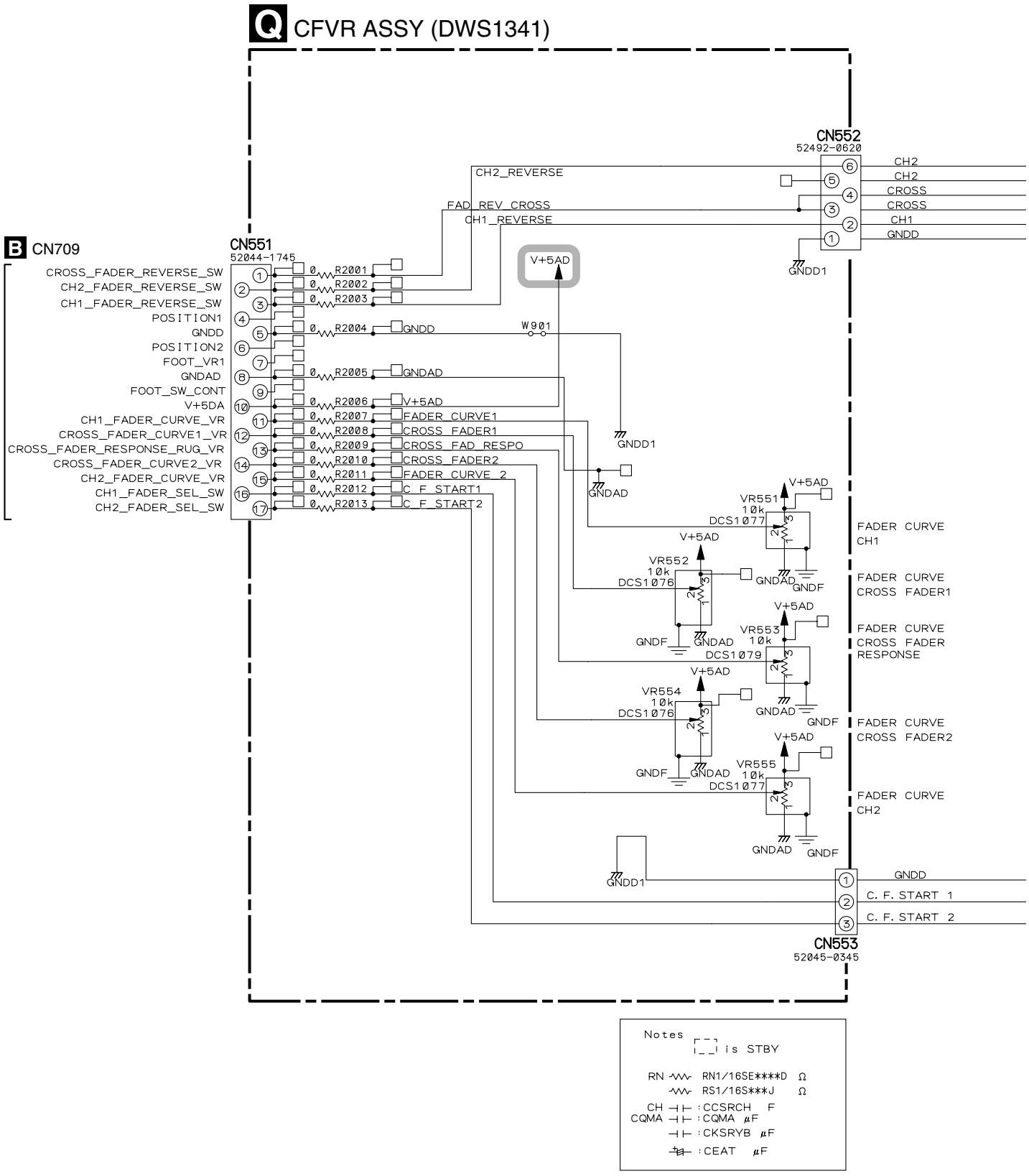

R RVSW ASSY (DWS1332)

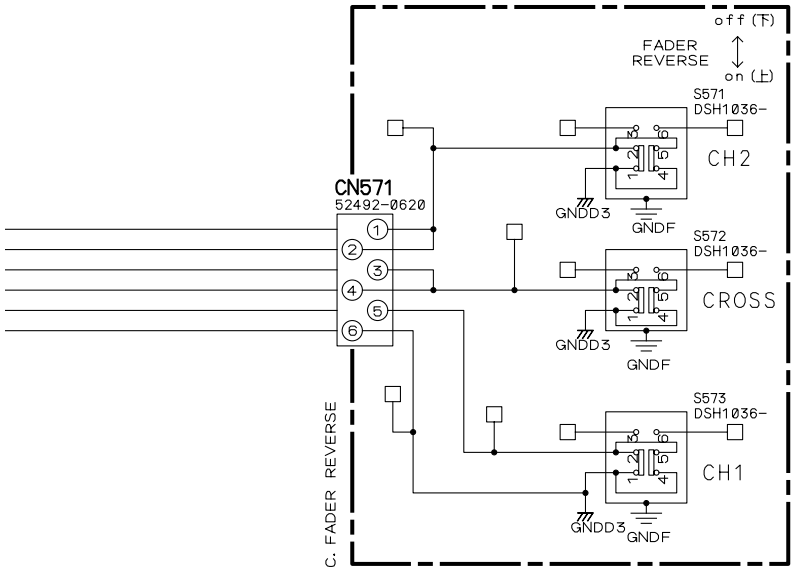

S551	SW POS.	SEL	Pin on	controll ch1	controll ch2
	up	ch1	4–3	L	H
	CENTER	off	4–2	H	H
	down	ch2	4–1	H	L

L : CH1 0dB, CH2 −∞
R : CH1 −∞, CH2 0dB

S FSSW ASSY (DWS1333)

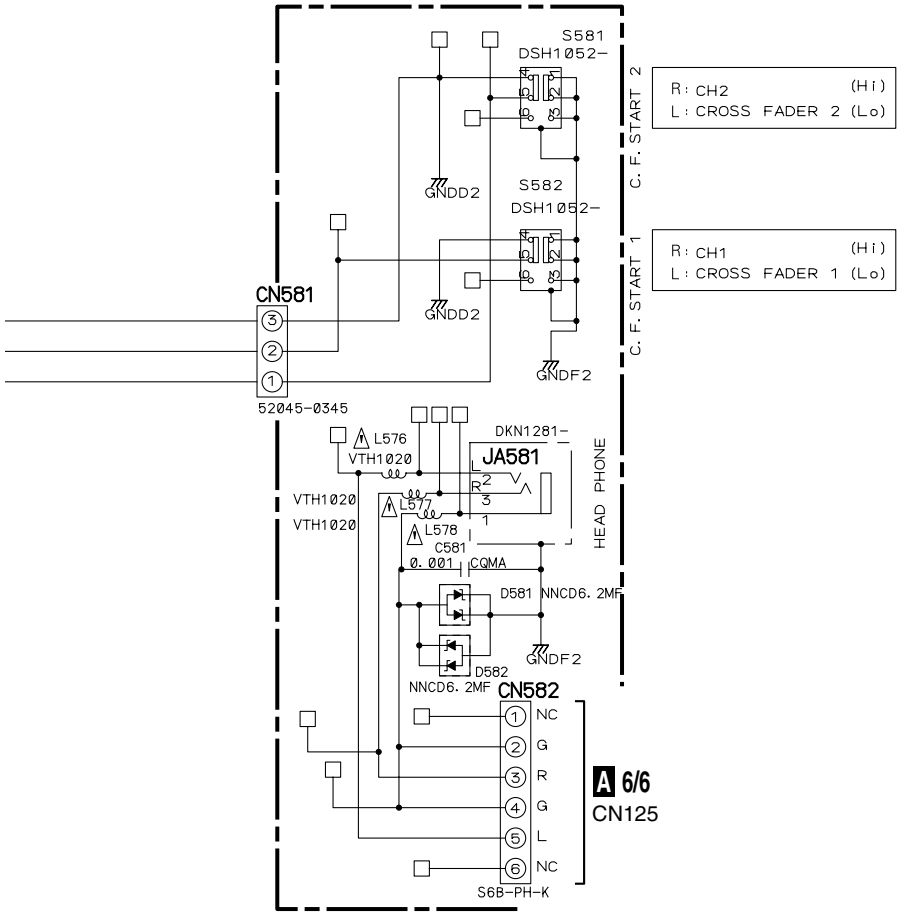

3.24 SW POWER SUPPLAY ASSY

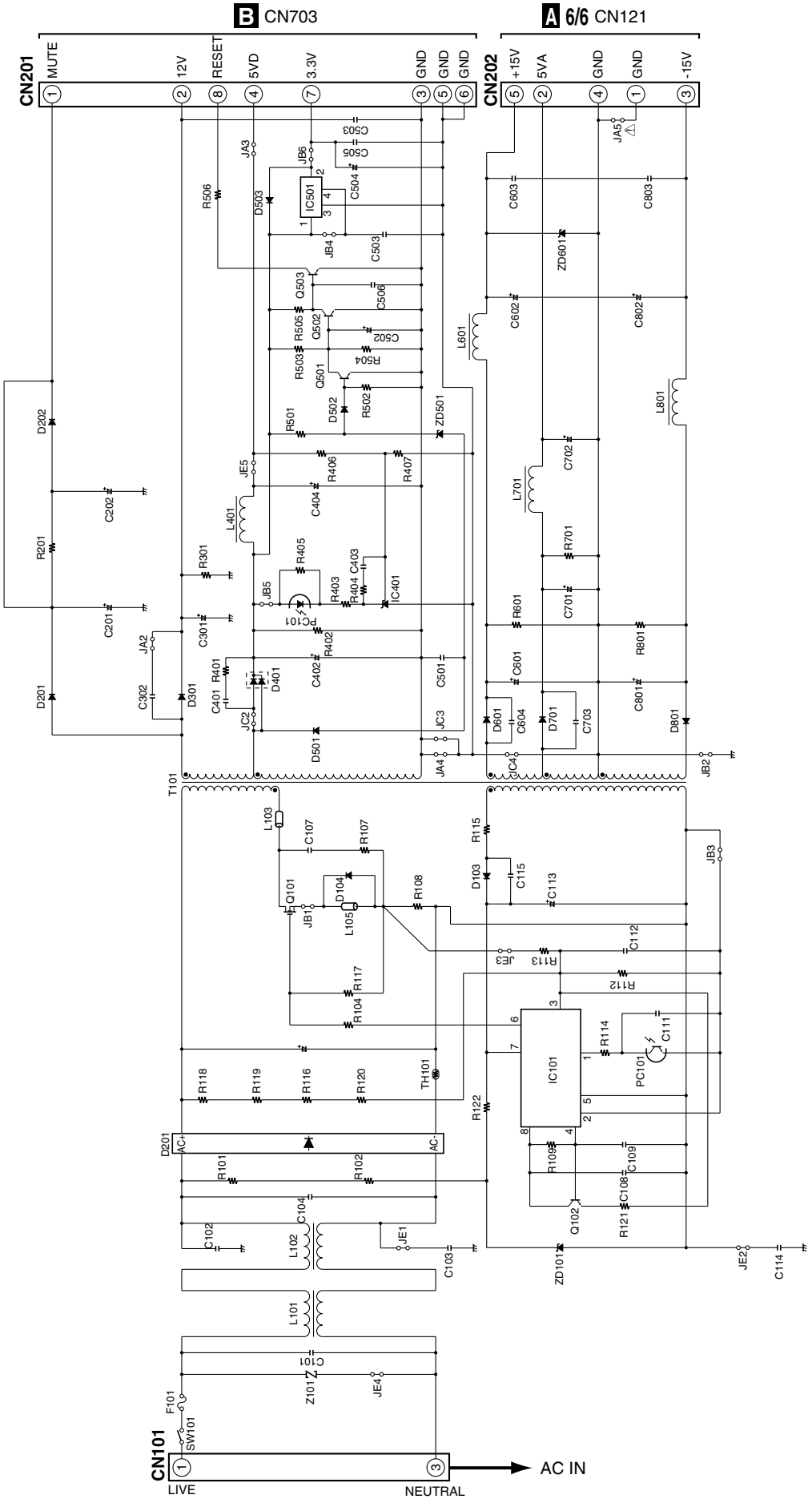

T SW POWER SUPPLY (DWR1377)

• NOTE FOR FUSE REPLACEMENT

CAUTION - FOR CONTINUED PROTECTION AGAINST RISK OF FIRE.
REPLACE WITH SAME TYPE AND RATINGS ONLY.

3.25 VOLTAGES

■ VOLTAGES

• Measurement condition

① **Front panel**

FADER REVERSE : All OFF
FADER CURVE : Turn all knobs clockwise fully
CUT LAG : Turn it counterclockwise fully
FADER START : OFF

② **Top panel**

MIC	: MAX	CH-1 switch	: CD 1	CH-2 switch	: CD 2	MASTER	: MAX
HI	: MID	TRIM	: MAX	TRIM	: MAX	BOOTH/SESSION OUT	: MAX
LOW	: MID	HI	: MID	HI	: MID	PHONES	: MAX
MIC SEND	: OFF	MID	: MID	MID	: MID	SELECT	: MASTER
SESSION IN	: MAX	LOW	: MID	LOW	: MID	FADER	: Center
CH-1 SEND	: OFF	EQ	: OFF	EQ	: OFF	CH-2 SEND	: OFF

FADER START	: OFF	FADER START	: OFF
TRANSFORM	: OFF	TRANSFORM	: OFF
CH-1 Fader	: MAX	CH-2 Fader	: MAX

MASTER LEVEL : ON
Cross Fader : Center

③ **Rear panel**

PHONO/LINE switch : Set both CH-1 and CH-2 to PHONO side
SEND, RETURN : Non connection
CD1, CD2 : 1kHz, 0dB input

A MAIN ASSY

IC101

No.	Voltage
1	2.0mV
2	1.3mV
3	0.7mV
4	-14.24V
5	0.7mV
6	0.7mV
7	3.4mV
8	14.14V

IC104

No.	Voltage
1	-0.5mV
2	1.6mV
3	1.4mV
4	-14.48V
5	1.4mV
6	1.7mV
7	0.2mV
8	14.34V

IC112

No.	Voltage
1	90.4mV
2	47.8mV
3	5.9mV
4	-14.24V
5	48.3mV
6	93.5mV
7	93.8mV
8	14.15V

IC114

No.	Voltage
1	2.5mV
2	14.35V
3	1.4mV
4	3.4mV
5	-11.76V
6	3.4mV
7	2.5mV
8	6.77V
9	3.4mV
10	-14.48V
11	18.1mV
12	963mV
13	-7.5mV
14	-7.5mV
15	2.04V
16	-14.48V

IC115

No.	Voltage
1	3.4mV
2	14.35V
3	4.6mV
4	5.2mV
5	-11.76V
6	5.2mV
7	5.1mV
8	6.54V
9	3.3mV
10	-14.48V
11	18.8mV
12	956mV
13	1.3mV
14	-7.4mV
15	2.04V
16	-14.48V

IC116

No.	Voltage
1	3.3mV
2	14.34V
3	2.5mV
4	6.5mV
5	-11.73V
6	5.0mV
7	3.2mV
8	6.76V
9	4.1mV
10	-14.48V
11	26.2mV
12	961mV
13	1.3mV
14	-7.2mV
15	2.03V
16	-14.49V

IC117

No.	Voltage
1	4.0mV
2	14.34V
3	3.7mV
4	7.2mV
5	-11.77V
6	7.3mV
7	4.0mV
8	6.75V
9	4.2mV
10	-14.48V
11	26.2mV
12	953mV
13	1.3mV
14	-6.9mV
15	2.02V
16	-14.48V

IC118

No.	Voltage
1	0.8mV
2	1.8mV
3	1.8mV
4	-14.24V
5	1.8mV
6	2.1mV
7	1.2mV
8	14.11V

IC119

No.	Voltage
1	1.8mV
2	1.8mV
3	1.8mV
4	1.8mV
5	1.8mV
6	1.8mV
7	1.8mV
8	-14.24V
9	1.8mV
10	1.8mV
11	1.8mV
12	46.1mV
13	1.8mV
14	1.8mV
15	1.8mV
16	14.1V

IC131

No.	Voltage
1	180.4mV
2	55.2mV
3	-3.1mV
4	-14.25V
5	-3.2mV
6	55.1mV
7	180.7mV
8	14.15V

IC132

No.	Voltage
1	-6.1mV
2	-4.4mV
3	-4.5mV
4	-14.22V
5	3.9mV
6	-6.1mV
7	-6.1mV
8	14.11V

IC133

No.	Voltage
1	-6.3mV
2	-4.6mV
3	-4.6mV
4	-14.24V
5	-4.4mV
6	-4.3mV
7	-6.0mV
8	14.15V

C C1EQ ASSY

IC1601

No.	Voltage
1	-2.9mV
2	3.0mV
3	3.9mV
4	-14.23V
5	2.8mV
6	3.2mV
7	-2.3mV
8	14.12V

IC1607

No.	Voltage
1	3.2mV
2	3.2mV
3	2.9mV
4	-14.23V
5	2.8mV
6	3.1mV
7	3.1mV
8	14.11V

IC1602

No.	Voltage
1	8.5mV
2	8.5mV
3	8.5mV
4	-14.24V
5	8.5mV
6	8.7mV
7	8.7mV
8	14.12V

IC1610

No.	Voltage
1	1.4mV
2	2.0mV
3	1.9mV
4	-14.24V
5	1.9mV
6	1.9mV
7	1.9mV
8	14.11V

IC1603

No.	Voltage
1	9.8mV
2	9.8mV
3	8.5mV
4	-14.24V
5	9.4mV
6	9.5mV
7	9.5mV
8	14.12V

IC1604

No.	Voltage
1	-1.4mV
2	6.1mV
3	6.0mV
4	-14.23V
5	5.4mV
6	5.8mV
7	1.3mV
8	14.12V

IC1605

No.	Voltage
1	6.3mV
2	6.3mV
3	6.2mV
4	-14.24V
5	6.2mV
6	6.4mV
7	6.4mV
8	14.12V

D C2EQ ASSY

IC1748

No.	Voltage
1	1.8mV
2	2.1mV
3	1.6mV
4	-14.22V
5	1.7mV
6	1.7mV
7	1.4mV
8	14.12V

IC1753

No.	Voltage
1	9.6mV
2	9.6mV
3	9.4mV
4	-14.24V
5	9.4mV
6	9.5mV
7	9.5mV
8	14.11V

IC1749

No.	Voltage
1	1.7mV
2	2.1mV
3	1.5mV
4	-14.23V
5	1.5mV
6	1.0mV
7	1.0mV
8	14.13V

IC1754

No.	Voltage
1	-3.8mV
2	3.3mV
3	3.1mV
4	-14.25V
5	3.1mV
6	3.4mV
7	-3.7mV
8	14.14V

IC1750

No.	Voltage
1	1.9mV
2	1.9mV
3	1.8mV
4	-14.25V
5	1.8mV
6	1.9mV
7	1.9mV
8	14.14V

IC1755

No.	Voltage
1	6.8mV
2	6.8mV
3	6.6mV
4	-14.23V
5	6.6mV
6	6.8mV
7	6.8mV
8	14.12V

IC1751

No.	Voltage
1	-3.1mV
2	-4.1mV
3	-4.1mV
4	-14.23V
5	1.8mV
6	1.8mV
7	-5.5mV
8	14.12V

IC1758

No.	Voltage
1	28.0mV
2	4.96V
3	11.1mV
4	4.97V
5	4.98V

IC1752

No.	Voltage
1	7.9mV
2	7.9mV
3	7.9mV
4	-14.23V
5	7.9mV
6	7.9mV
7	7.9mV
8	14.12V

E C1BF ASSY

IC1251

No.	Voltage
1	11.4mV
2	11.4mV
3	11.4mV
4	-14.23V
5	11.7mV
6	12.8mV
7	12.8mV
8	14.14V

IC1252

No.	Voltage
1	12.7mV
2	12.7mV
3	12.8mV
4	-14.23V
5	12.8mV
6	13.1mV
7	13.1mV
8	14.14V

IC1253

No.	Voltage
1	278.8mV
2	-104.2mV
3	-100.9mV
4	-14.22V
5	-102.3mV
6	-166.5mV
7	261.8mV
8	14.13V

IC1255

No.	Voltage
1	-13.5mV
2	1.4mV
3	1.8mV
4	-14.23V
5	1.4mV
6	1.4mV
7	-13.3mV
8	14.14V

F C2BF ASSY

IC1351

No.	Voltage
1	11.2mV
2	11.2mV
3	11.1mV
4	-14.24V
5	11.1mV
6	11.3mV
7	11.3mV
8	14.16V

IC1352

No.	Voltage
1	12.7mV
2	12.7mV
3	12.3mV
4	-14.25V
5	12.1mV
6	12.6mV
7	12.6mV
8	14.14V

IC1353

No.	Voltage
1	350mV
2	-129.2mV
3	-139.2mV
4	-14.24V
5	-137.2mV
6	-133.4mV
7	329mV
8	14.14V

IC1355

No.	Voltage
1	-12.6mV
2	1.8mV
3	1.8mV
4	-14.23V
5	1.8mV
6	1.8mV
7	12.3mV
8	14.14V

G MICB ASSY

IC1201

No.	Voltage
1	-60.4mV
2	14.0mV
3	13.9mV
4	-14.22V
5	21.4mV
6	21.7mV
7	9.9mV
8	14.13V

IC1202

No.	Voltage
1	-5.0mV
2	4.0mV
3	3.6mV
4	-14.22V
5	3.6mV
6	3.9mV
7	-5.1mV
8	14.13V

IC1203

No.	Voltage
1	0.4mV
2	2.1mV
3	1.7mV
4	-14.23V
5	3.7mV
6	3.8mV
7	2.1mV
8	14.13V

H HPBO ASSY

IC1451

No.	Voltage
1	-4.3mV
2	-4.4mV
3	-4.6mV
4	-14.24V
5	-4.6mV
6	-4.6mV
7	-4.4mV
8	14.27V

IC1452

No.	Voltage
1	-0.2mV
2	1.7mV
3	1.6mV
4	-14.25V
5	1.6mV
6	1.7mV
7	-0.1mV
8	14.27V

IC1453

No.	Voltage
1	-5.1mV
2	1.5mV
3	1.6mV
4	-14.24V
5	1.5mV
6	1.8mV
7	1.6mV
8	14.27V

IC1454

No.	Voltage
1	7.15V
2	77.0mV
3	7.11V
4	5.1mV
5	7.09V
6	7.13V
7	7.13V
8	14.27V

IC1455

No.	Voltage
1	1.5mV
2	20.9mV
3	1.5mV
4	1.3mV
5	21.0mV
6	1.4mV
7	1.3mV
8	-14.26V
9	1.5mV
10	1.6mV
11	-7.2mV
12	20.9mV
13	1.6mV
14	2.0mV
15	1.9mV
16	14.24V

IC1456

No.	Voltage
1	1.5mV
2	20.5mV
3	1.5mV
4	1.6mV
5	4.98V
6	1.4mV
7	1.4mV
8	-14.25V
9	1.4mV
10	1.4mV
11	-7.0mV
12	20.6mV
13	1.4mV
14	2.0mV
15	2.0mV
16	14.24V

J SDRT ASSY

IC1901

No.	Voltage
1	0.9mV
2	2.9mV
3	2.9mV
4	-14.57V
5	2.9mV
6	3.0mV
7	0.9mV
8	14.43V

IC1902

No.	Voltage
1	2.5mV
2	2.5mV
3	2.4mV
4	-14.57V
5	2.2mV
6	2.9mV
7	2.9mV
8	14.43V

IC1903

No.	Voltage
1	2.3mV
2	15.6mV
3	2.3mV
4	2.3mV
5	4.94V
6	2.3mV
7	2.3mV
8	-14.57V
9	2.2mV
10	2.2mV
11	2.2mV
12	2.2mV
13	2.2mV
14	2.2mV
15	2.2mV
16	14.43V

K XLR ASSY

IC102

No.	Voltage
1	13.1mV
2	13.1mV
3	13.0mV
4	-14.24V
5	12.9mV
6	9.3mV
7	13.0mV
8	14.14V

IC108

No.	Voltage
1	3.4mV
2	-172.2mV
3	-188.6mV
4	-14.23V
5	-193.4mV
6	-180.1mV
7	-4.1mV
8	14.14V

IC110

No.	Voltage
1	206.7mV
2	40.3mV
3	39.3mV
4	-14.24V
5	-8.7mV
6	-10.2mV
7	-119.7mV
8	14.14V

IC111

No.	Voltage
1	180.1mV
2	44.1mV
3	43.3mV
4	-14.25V
5	-10.8mV
6	-4.2mV
7	-164.6mV
8	14.14V

IC137

No.	Voltage
1	104.0mV
2	38.0mV
3	1.5mV
4	-14.24V
5	16.4mV
6	38.1mV
7	102.3mV
8	14.14V

L LVMR ASSY

IC401

No.	Voltage
1	311.2mV
2	320.3mV
3	357mV
4	-14.55V
5	355mV
6	318mV
7	305.7mV
8	14.41V

IC402

No.	Voltage
1	311.1mV
2	321.7mV
3	358mV
4	-14.55V
5	358mV
6	317.7mV
7	306.2mV
8	14.41V

IC403

No.	Voltage
1	314.7mV
2	314.4mV
3	330.0mV
4	-14.56V
5	24.7mV
6	24.8mV
7	24.8mV
8	14.42V

IC404

No.	Voltage
1	317.7mV
2	316.8mV
3	340.0mV
4	-14.56V
5	27.3mV
6	26.9mV
7	26.9mV
8	14.41V

IC407

No.	Voltage
1	5.94V
2	53.3mV
3	12.23V
4	11.47V
5	52.1mV
6	153.4mV
7	11.48V
8	457mV
9	11.48V
10	793mV
11	11.49V
12	24.6mV
13	1.98V
14	3.94V

IC408

No.	Voltage
1	1.98V
2	3.93V
3	12.19V
4	460mV
5	11.48V
6	795mV
7	11.48V
8	1.62V
9	55.1mV
10	156.6mV
11	11.49V
12	27.9mV
13	5.9V
14	57.3mV

IC409

No.	Voltage
1	3.94V
2	55.8mV
3	12.19V
4	11.5V
5	1.27V
6	1.71V
7	11.5V
8	1.91V
9	11.51V
10	11.51V
11	2.16V
12	24.7mV
13	232.9mV
14	1.98V

IC410

No.	Voltage
1	251.6mV
2	1.98V
3	12.19V
4	1.91V
5	11.51V
6	11.51V
7	2.16V
8	11.52V
9	1.27V
10	1.71V
11	11.52V
12	28.0mV
13	3.92V
14	64.1mV

IC411

No.	Voltage
1	5.68V
2	53.7mV
3	12.19V
4	11.52V
5	2.92V
6	3.84V
7	11.52V
8	6.26V
9	11.52V
10	9.61V
11	11.52V
12	24.6mV
13	1.86V
14	3.76V

IC412

No.	Voltage
1	1.86V
2	3.77V
3	12.19V
4	6.27V
5	11.5V
6	9.61V
7	11.5V
8	11.5V
9	2.92V
10	3.85V
11	11.5V
12	27.6mV
13	5.66V
14	56.8mV

IC413

No.	Voltage
1	11.49V
2	24.7mV
3	24.7mV
4	24.7mV
5	14.34V
6	11.49V
7	11.54V
8	14.41V

IC416

No.	Voltage
1	11.49V
2	27.4mV
3	27.4mV
4	27.4mV
5	14.34V
6	11.5V
7	11.49V
8	14.41V

IC417

No.	Voltage
1	11.51V
2	11.51V
3	11.51V
4	-14.55V
5	24.8mV
6	26.2mV
7	26.1mV
8	14.41V

IC418

No.	Voltage
1	11.51V
2	11.51V
3	11.51V
4	-14.55V
5	27.4mV
6	29.2mV
7	29.2mV
8	14.41V

3.26 WAVEFORMS

Note : The encircled numbers denote measuring point in the schematic diagram.

E C1BF ASSY

① JA251 (CD L)
V: 0.1V/div. H: 200uS/div.

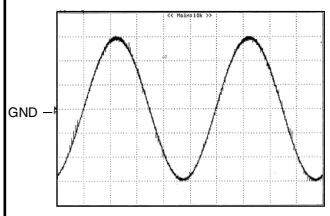

E C1BF ASSY

⑤ RY1251 4pin (LINE L)
V: 1V/div. H: 200uS/div.

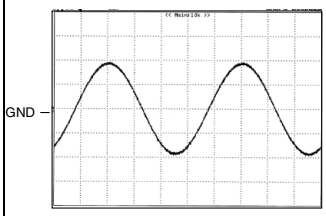

C 1/2 C1EQ ASSY

⑨ IC1601 7 pin (BUF_L)
V: 1V/div. H: 200uS/div.

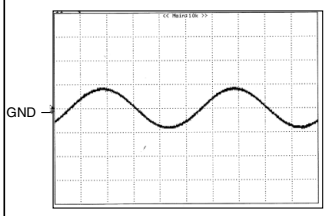

C 1/2 C1EQ ASSY

⑫ TP1747 (SW_EQ_L)
V: 1/div. H: 200uS/div.

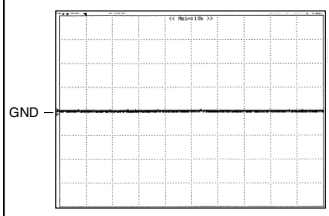

E C1BF ASSY

② RY1252 4pin (CD L)
V: 0.1V/div. H: 200uS/div.

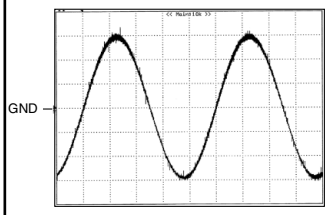

C 1/2 C1EQ ASSY

⑩ IC1604 7pin (EQ_LOUT)
V: 1V/div. H: 200uS/div.

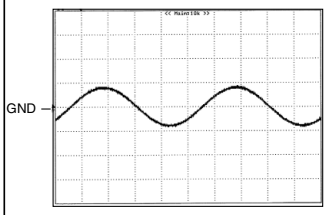

C 1/2 C1EQ ASSY
MODE: EQ- ON (S1601)

⑫ TP1715 (EQ_L)
V: 1V/div. H: 200uS/div.

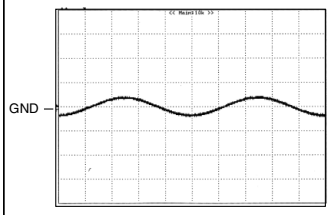

E C1BF ASSY

③ JA1251 (LINE L)
V: 20mV/div. H: 200uS/div.

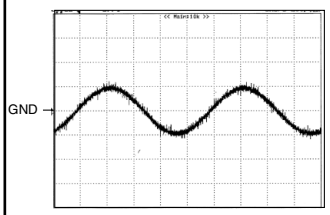

E C1BF ASSY

⑦ CN1254 1pin (CH1_IN_L)
V: 0.1V/div. H: 200uS/div.

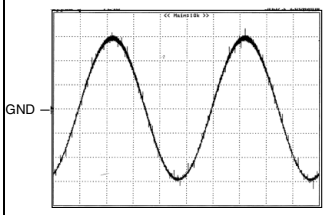

C 1/2 C1EQ ASSY
MODE: EQ- OFF (S1601)

⑪ TP1617 (THROU_L)
V: 1V/div. H: 200uS/div.

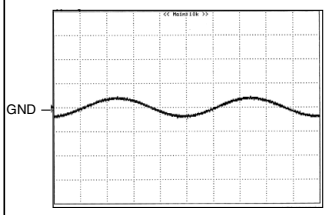

A 3/6 MAIN ASSY

⑬ CN101 3pin (1CH_OUT_L)
V: 1V/div. H: 200uS/div.

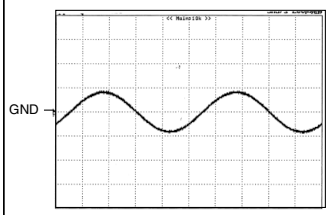

E C1BF ASSY

④ RY1251 2pin (LINE L)
V: 20mV/div. H: 200uS/div.

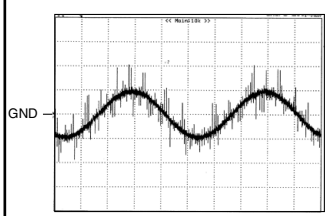

C 1/2 C1EQ ASSY

⑧ CN1601 1pin (CH1_IN_L)
V: 0.1/div. H: 200uS/div.

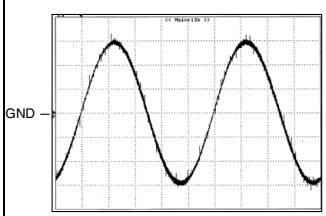

C 1/2 C1EQ ASSY

⑪ TP1617 (THROU_L)
V: 1V/div. H: 200uS/div.

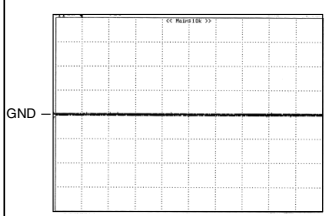

A 3/6 MAIN ASSY

⑭ C197(NP) (+IN)
V: 1V/div. H: 200uS/div.

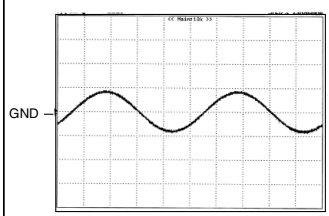

A 3/6 MAIN ASSY

15 IC115 14pin (VG)
V: 1V/div. H: 200uS/div.

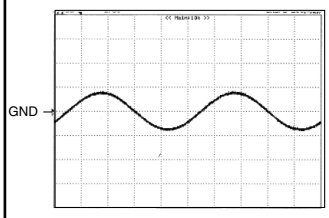

H HPBO ASSY

19 CN1454 8pin (MASTER_IN_L)
V: 1V/div. H: 200uS/div.

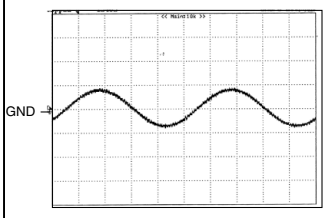

K 2/2 XLR ASSY

22 L (-) pin
V: 1V/div. H: 200uS/div.

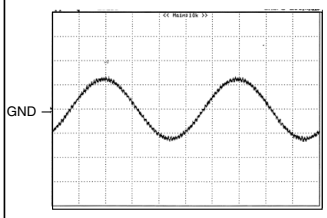

A 6/6 MAIN ASSY

26 CN119 14 pin (BOOTH_OUT_L)
V: 1V/div. H: 200uS/div.

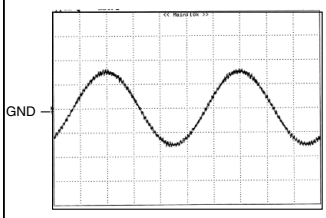

A 1/6 MAIN ASSY

16 Q101 E (CH1 VCA OUT L)
V: 0.2/div. H: 200uS/div.

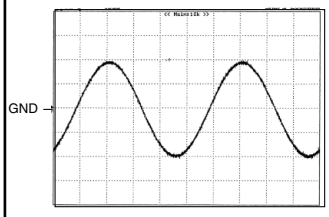

H HPBO ASSY

20 CN1452 18pin (MASTER2_OUT_L)
V: 1V/div. H: 200uS/div.

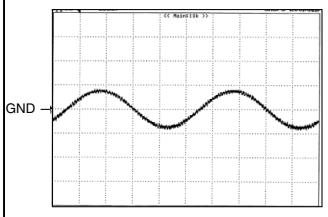

A 2/6 MAIN ASSY

23 C329 +pin (MASTER_PIN_L)
V: 1V/div. H: 200uS/div.

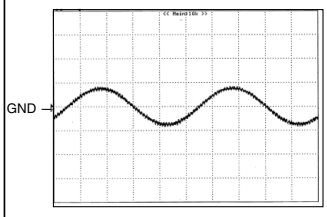

A 2/6 MAIN ASSY

27 JA101 (BOOTH_L)
V: 1V/div. H: 200uS/div.

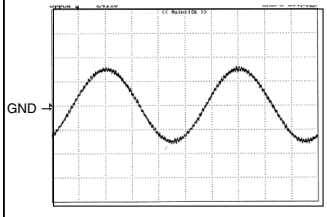

A 1/6 MAIN ASSY

17 CN123 4pin (FIL_IN_L)
V: 0.2V/div. H: 200uS/div.

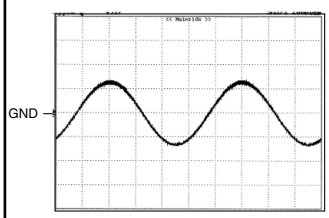

K 2/2 XLR ASSY

21 C131 pin (MASTER_L)
V: 1V/div. H: 200uS/div.

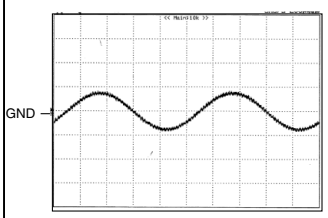

A 2/6 MAIN ASSY
MODE: EQ- OFF (S1601)

24 JA101 (MASTER OUT2_L)
V: 1V/div. H: 200uS/div.

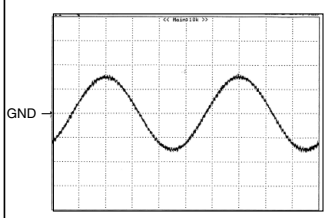

A 1/6 MAIN ASSY

28 C285 (VCA_AL)
V: 1V/div. H: 200uS/div.

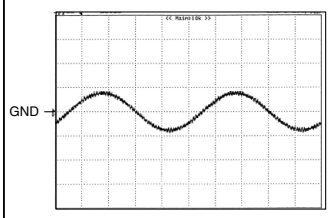

K 1/2 XLRASSY

18 CN122 8pin (MASTER_IN_L)
V: 1V/div. H: 200uS/div.

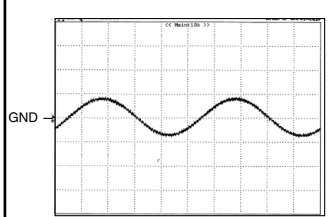

K 2/2 XLR ASSY

22 L (+) pin
V: 1V/div. H: 200uS/div.

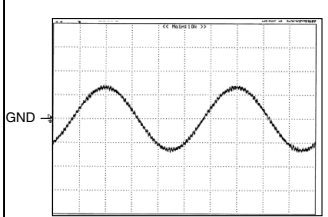

H HPBO ASSY

25 C1459 (BOOTH_L)
V: 1V/div. H: 200uS/div.

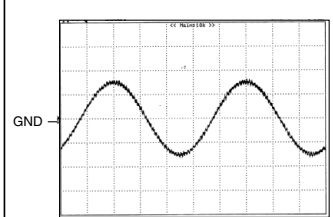

A 1/6 MAIN ASSY
MODE: SEND- OFF (S1603)

29 IC104 1pin (SEND_OUT_L)
V: 1V/div. H: 200uS/div.

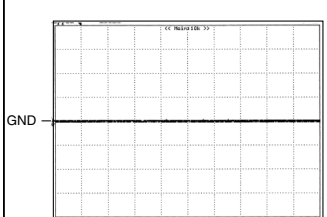

A 1/6 MAIN ASSY
MODE: SEND- ON (S1603)

29 IC104 1pin (SEND_OUT_L)
V: 1V/div. H: 200us/div.

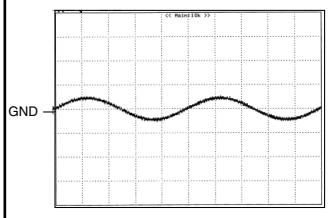

H HPBO ASSY

31 IC1453 1pin (HP_LEVEL)
V: 1V/div. H: 200uS/div.

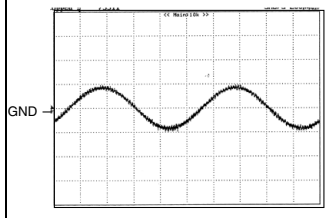

G MICB ASSY

35 C1242 pin (MIC)
V: 0.1V/div. H: 200uS/div.

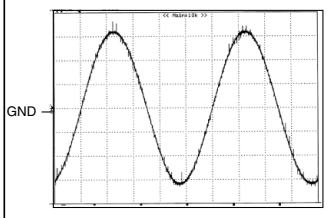

H HPBO ASSY
MODE: SELECT-MASTER(S1752)

30 IC1455 3pin (MASTER L)
V: 1Vdiv. H: 200uS/div.

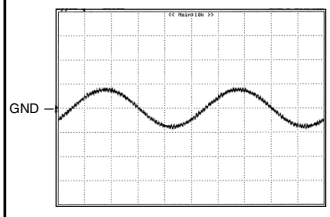

H HPBO ASSY

32 TP1515 (FC)
V: 1V/div. H: 200uS/div.

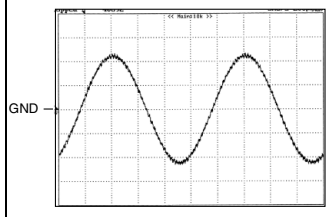

G MICB ASSY

36 C1237 pin (MIC)
V: 0.1V/div. H: 200uS/div.

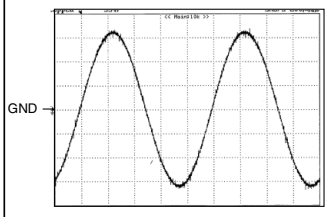

G MICB ASSY

40 JA1202 (SESSION_L)
V: 0.1V/div. H: 200uS/div.

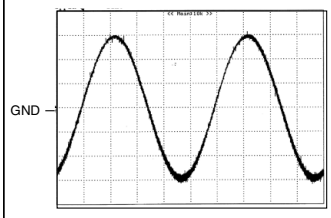

H HPBO ASSY
MODE: SELECT-EFECT(S1752)

30 IC1455 3pin (MASTER L)
V: 1V/div. H: 200uS/div.

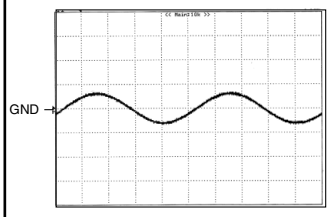

G MICB ASSY

33 JA1201 2, 3pin (MIC)
V: 20mV/div. H: 200uS/div.

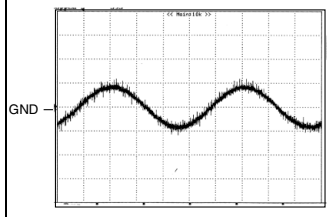

C 2/2 C1EQ ASSY

37 CN1604 (MIC_EQ_IN)
V: 5V/div. H: 200uS/div.

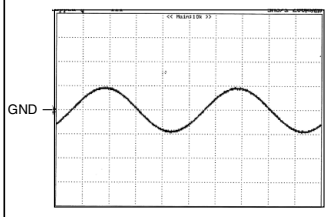

G MICB ASSY

41 CN1202 1pin (SESSION_IN_L)
V: 1V/div. H: 200uS/div.

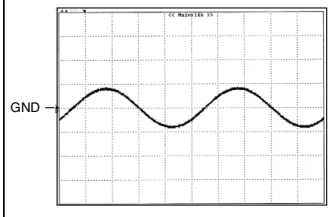

H HPBO ASSY
MODE: SELECT-CUE (S1752)

30 IC1455 3pin (MASTER L)
V: 1V/div. H: 200uS/div.

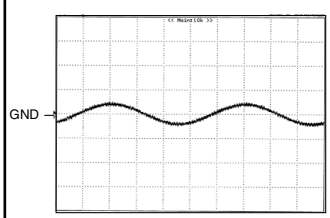

G MICB ASSY

34 C1230 pin (MIC)
V: 0.1V/div. H: 200uS/div.

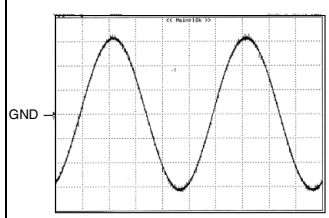

C 2/2 C1EQ ASSY

38 IC1610 1pin (MIC_OUT)
V: 5V/div. H: 200uS/div.

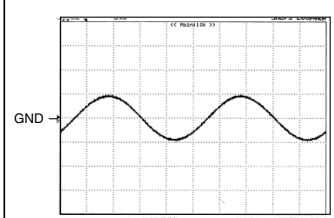

C 2/2 C1EQ ASSY

42 CN1604 1pin (SE_IN_L)
V: 1V/div. H: 200uS/div.

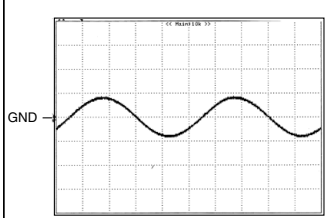

C 1/2 CH1EQ ASSY

43 CN1603 15pin (SESSION_OUT_L)
V: 1V/div. H: 200uS/div.

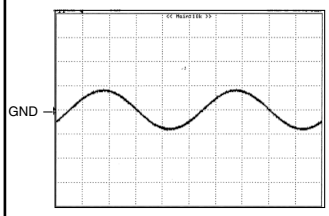

J SDRT ASSY

47 IC1902 1pin (SND_L2)
V: 0.1V/div. H: 200uS/div.

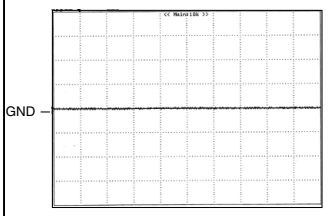

L 2/2 LVMR ASSY

59 IC413 6pin (CH1)
V: 1V/div. H: 200uS/div.

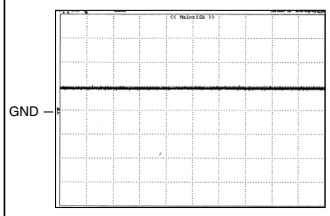

J SDRT ASSY

44 JA1902 2pin (RETURN L)
V: 0.1V/div. H: 200uS/div.

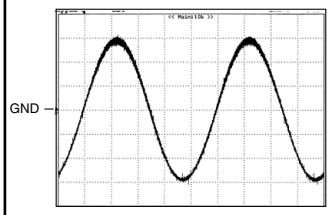

J SDRT ASSY
MODE: SEND- ON (S1603)

47 IC1902 1pin (SND_L2)
V: 0.1Vdiv. H: 200uS/div.

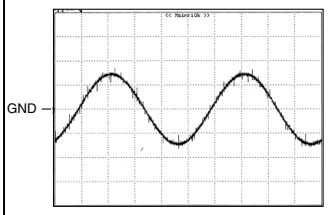

L 2/2 LVMR ASSY
MODE: MASTER LEVEL- ON (S401)

60 IC417 1pin
V: 1V/div. H: 200uS/div.

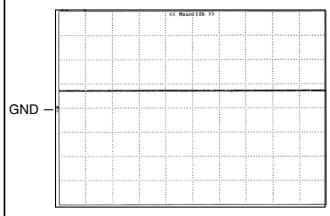

J SDRT ASSY

45 C1910 pin (RTN_L3)
V: 1V/div. H: 200uS/div.

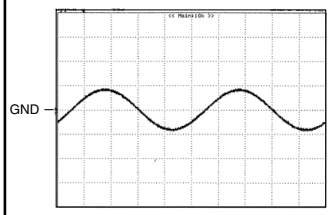

J SDRT ASSY
MODE: SEND- ON (S1603)

48 JA1904 3pin (SEND L)
V: 0.1V/div. H: 200uS/div.

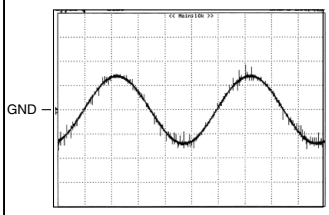

L 2/2 LVMR ASSY
MODE: MASTER LEVEL- OFF (S401)

60 IC417 1pin
V: 1V/div. H: 200uS/div.

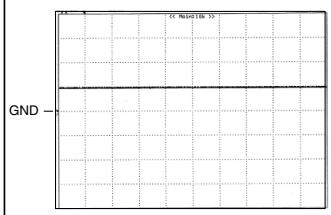

J SDRT ASSY
MODE: SEND- ON (S1603)

46 CN1901 11pin (SEND_L)
V: 1V/div. H: 200uS/div.

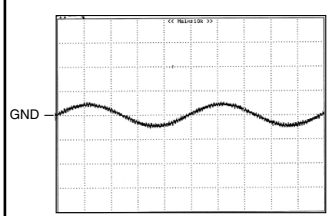

L 2/2 LVMR ASSY

58 C401 pin (CH1_L)
V: 1V/div. H: 200uS/div.

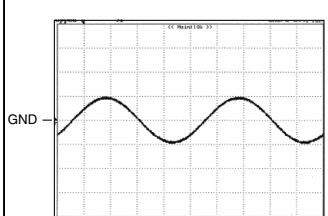

4. PCB CONNECTION DIAGRAM
4.1 MAIN ASSY

SIDE A

NOTE FOR PCB DIAGRAMS :

1. Part numbers in PCB diagrams match those in the schematic diagrams.
2. A comparison between the main parts of PCB and schematic diagrams is shown below.
3. The parts mounted on this PCB include all necessary parts for several destinations.
   For further information for respective destinations, be sure to check with the schematic diagram.
4. View point of PCB diagrams.

Symbol In PCB Diagrams	Symbol In Schematic Diagrams	Part Name
B C E	B C E B C E	Transistor
B C E	B C E B C E	Transistor with resistor
D G S	D G S D G S	Field effect transistor
		Resistor array
		3-terminal regulator

Connector Capacitor

P.C.Board Chip Part

SIDE A

SIDE B

Q132 Q149
Q152 Q154
Q153 IC119 Q136 Q140 IC101
IC118 IC137 Q109 Q129 Q101 Q103 Q150 Q151
IC132 IC115 IC114 IC104
VR101 VR103

A MAIN ASSY

MAIN DWX2338

Production code

DC FC

K CN124

CN123

OPEN

E CN1252 CN102

G CN1201 CN115

CONTACT SIDE

CONTACT SIDE

ATTENTION

REMPLACER LE IC LINKS COMME INDIQUE

FR4 P

120.5

CN118 CN101 CN116

B CN706 **E** CN1251 **J** CN1901

A

SIDE A

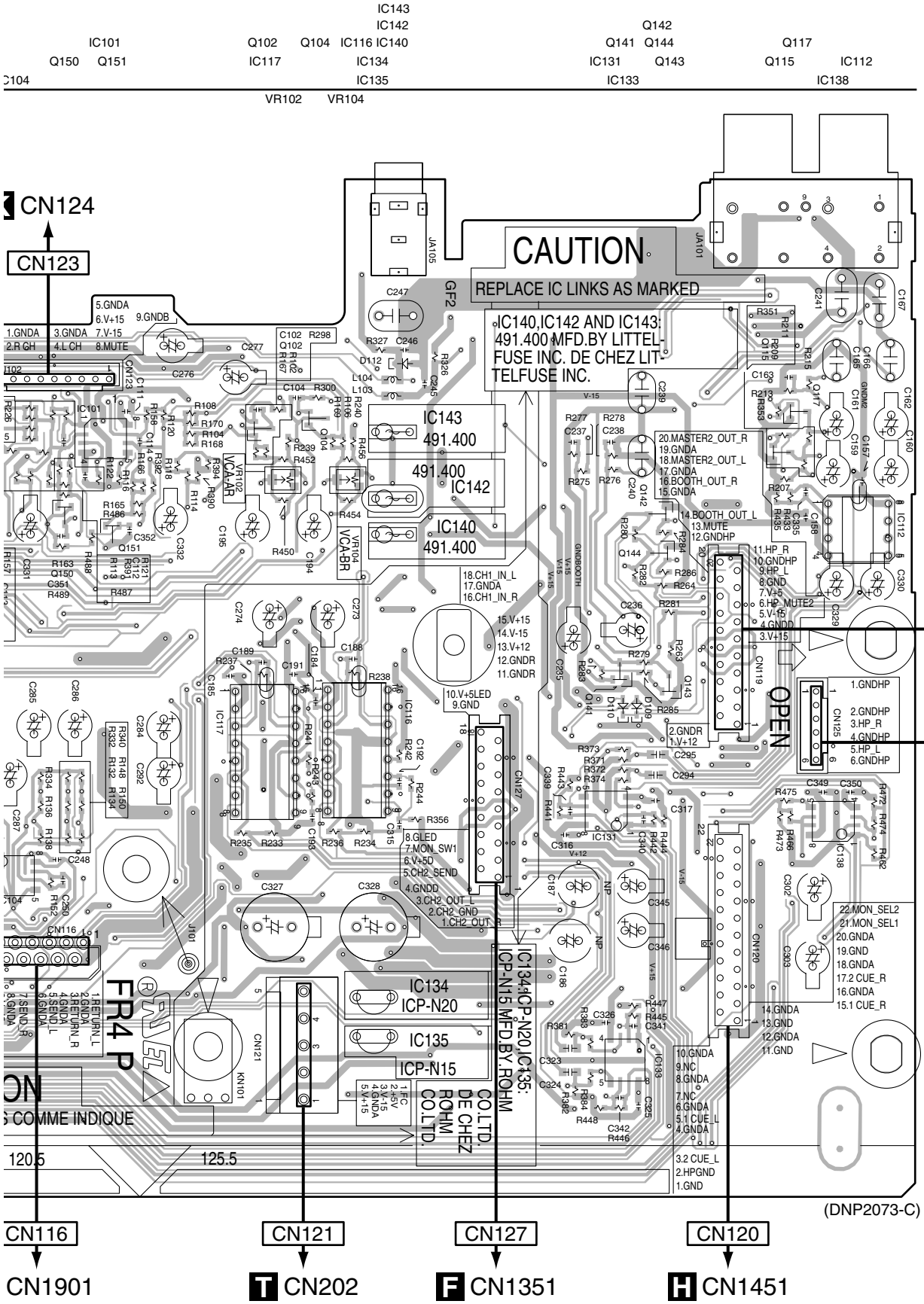
CAUTION
REPLACE IC LINKS AS MARKED
IC140,IC142 AND IC143:
491.400 MFD.BY LITTEL-
FUSE INC. DE CHEZ LIT-
TELFUSE INC.
IC143
491.400
IC142
491.400
IC140
491.400
IC134
ICP-N20
IC135
ICP-N15
IC134ICP-N20,IC135:
ICP-N15 MFD.BY.ROHM
CO.LTD.
DE CHEZ
ROHM
CO.LTD
CN124
CN123
CN116
CN121
CN127
CN120
CN119
CN125
H CN1452
S CN582
CN1901
T CN202
F CN1351
H CN1451
OPEN
(DNP2073-C)
120.5
125.5

SIDE B

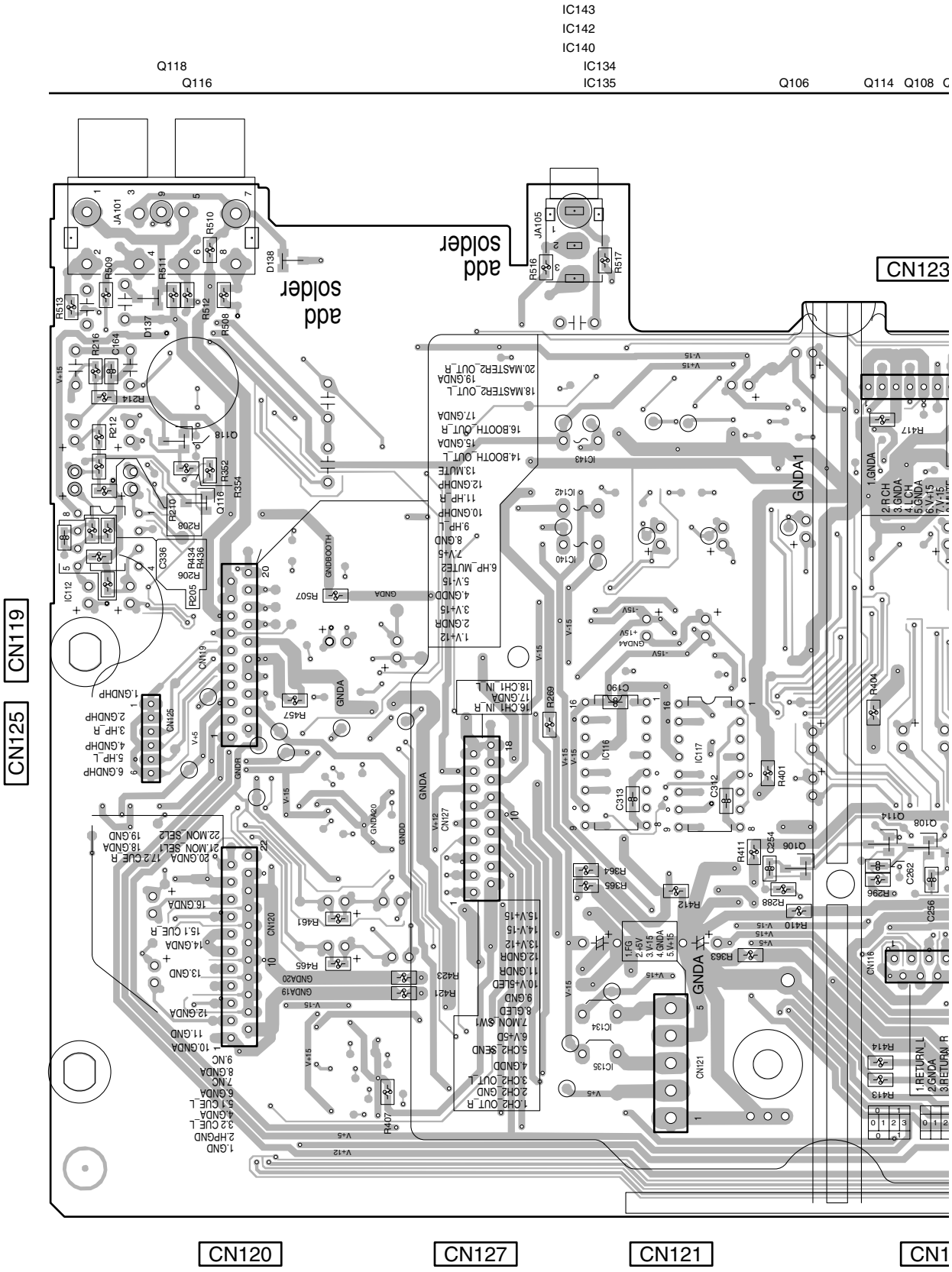

IC143
IC142
IC140
IC134
IC135
Q118
Q116
Q106
Q114
Q108
add solder
add solder
CN123
CN119
CN125
CN120
CN127
CN121
GNDA1
GNDA

A

SIDE B

Q114 Q108 Q105 Q107 Q113

A MAIN ASSY

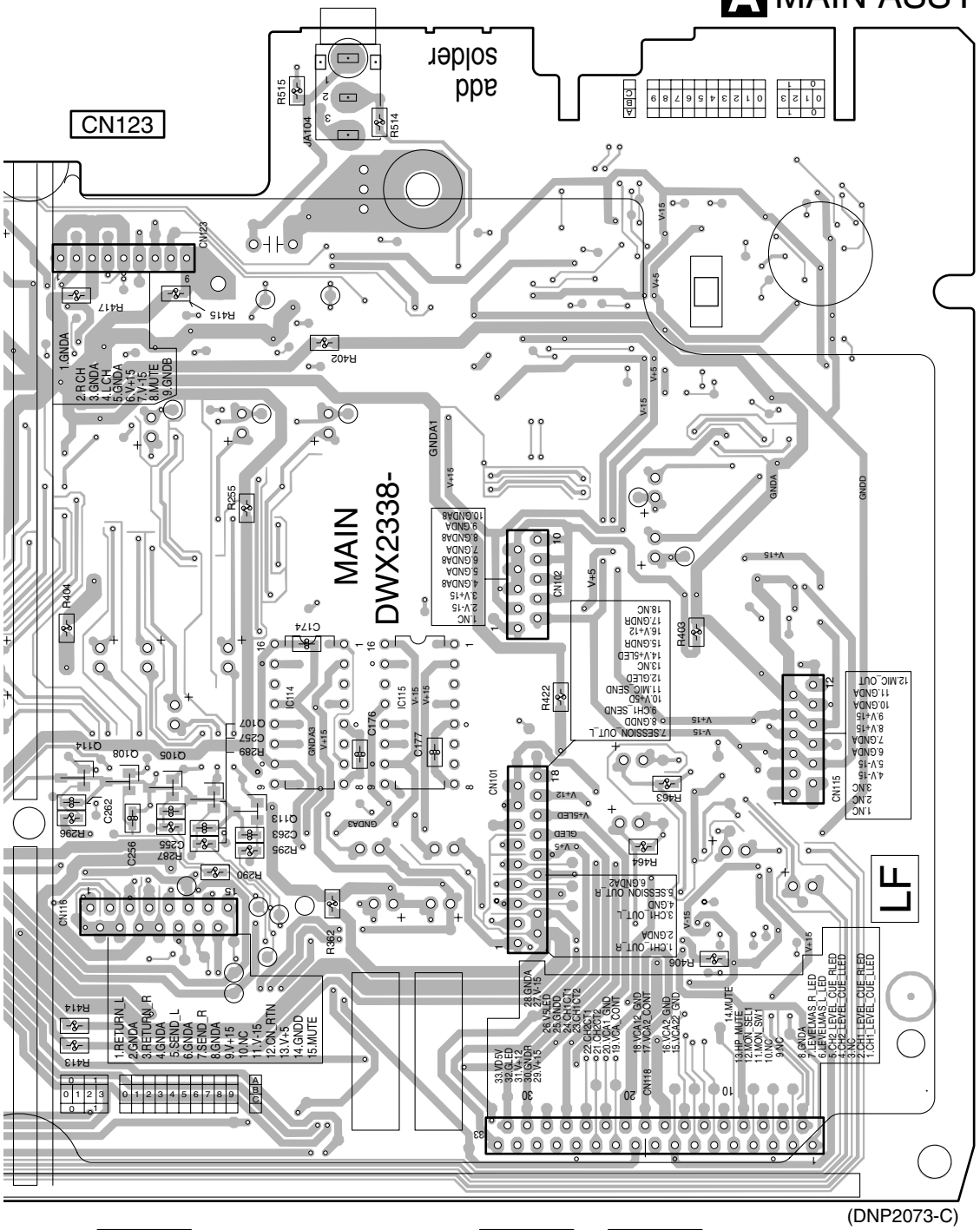

4.2 CONT ASSY

SIDE A

SIDE A

B CONT ASSY

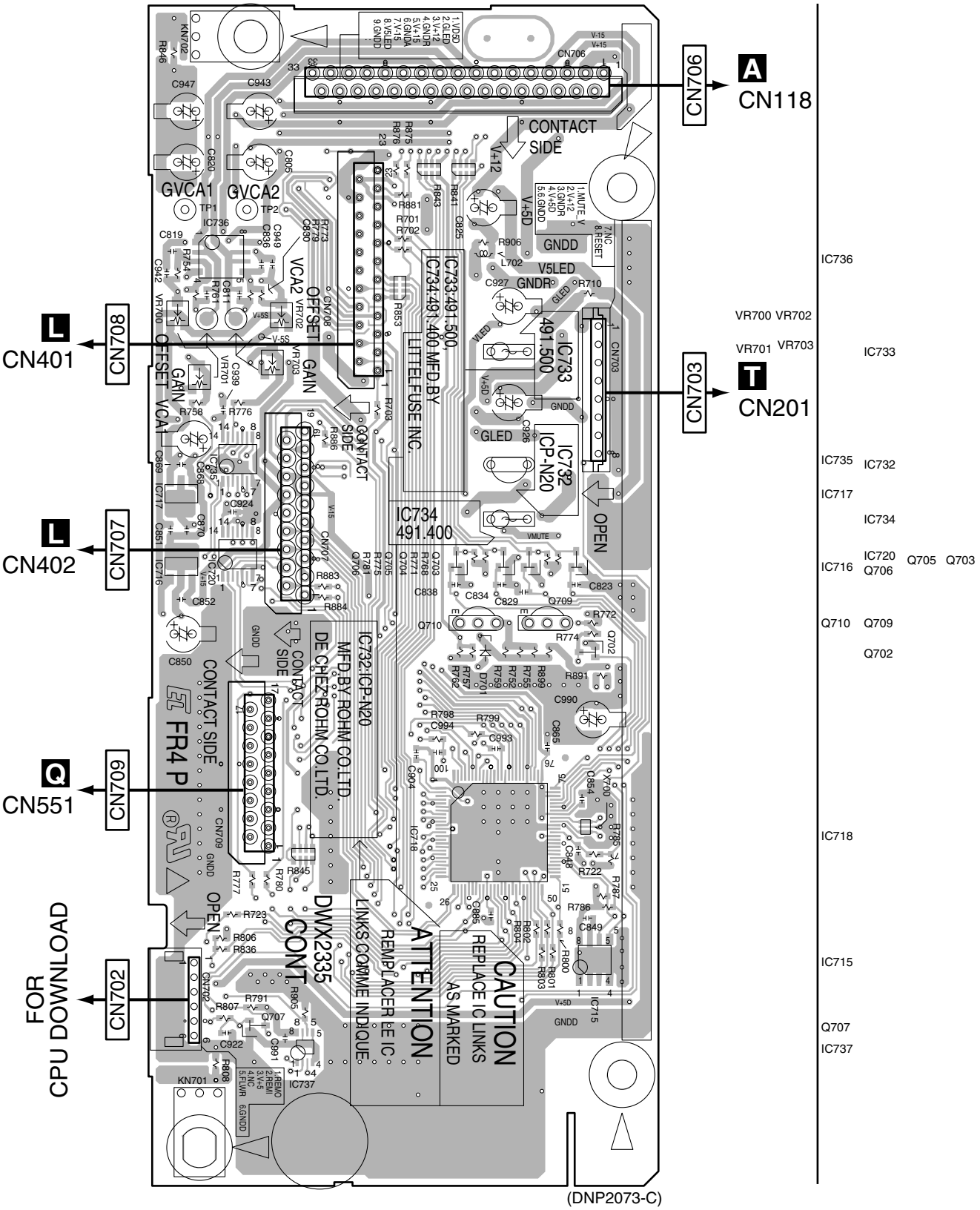

(DNP2073-C)

B

B

SIDE B

SIDE B

B CONT ASSY

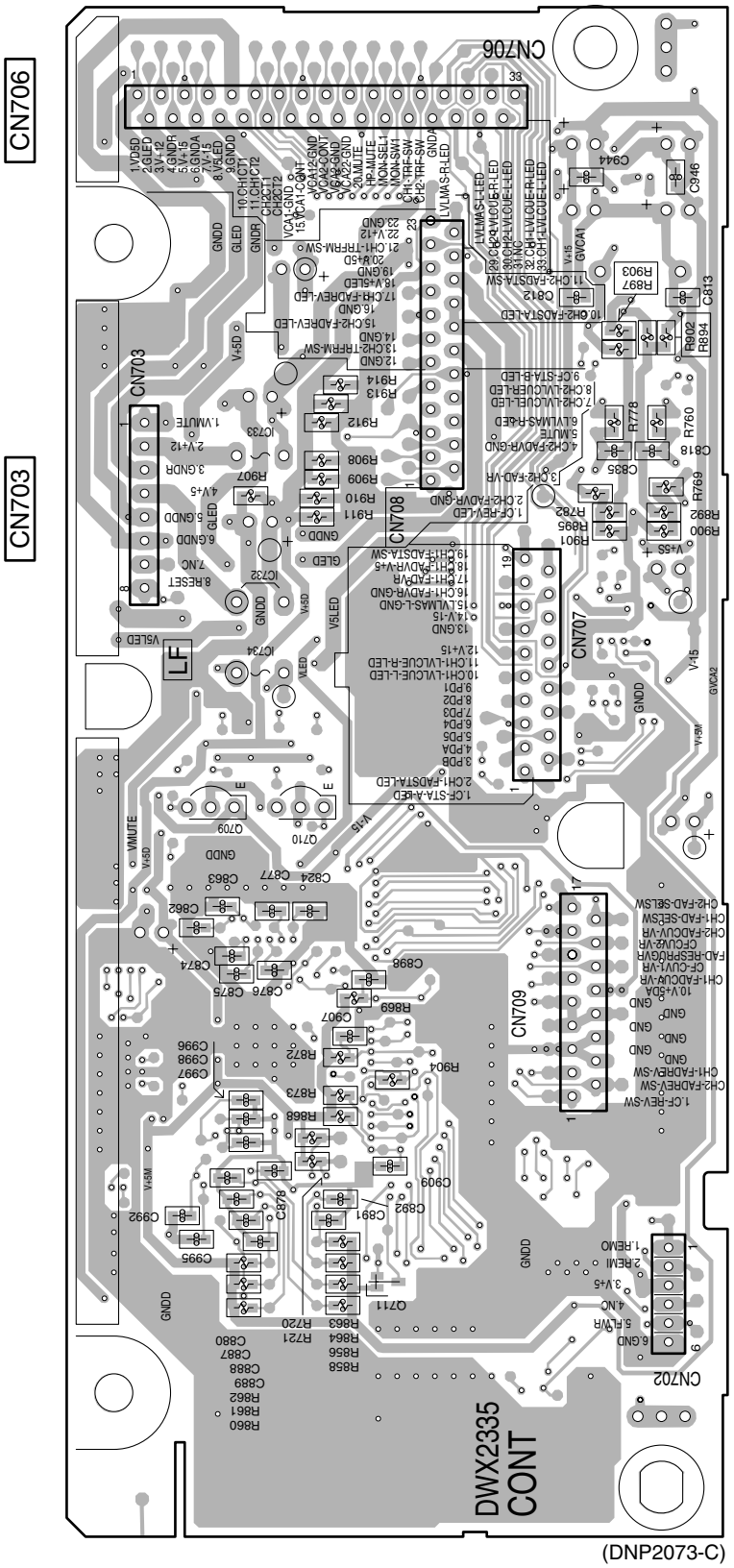

(DNP2073-C)

4.3 C1 EQ ASSY

SIDE A

SIDE A

C C1EQ ASSY

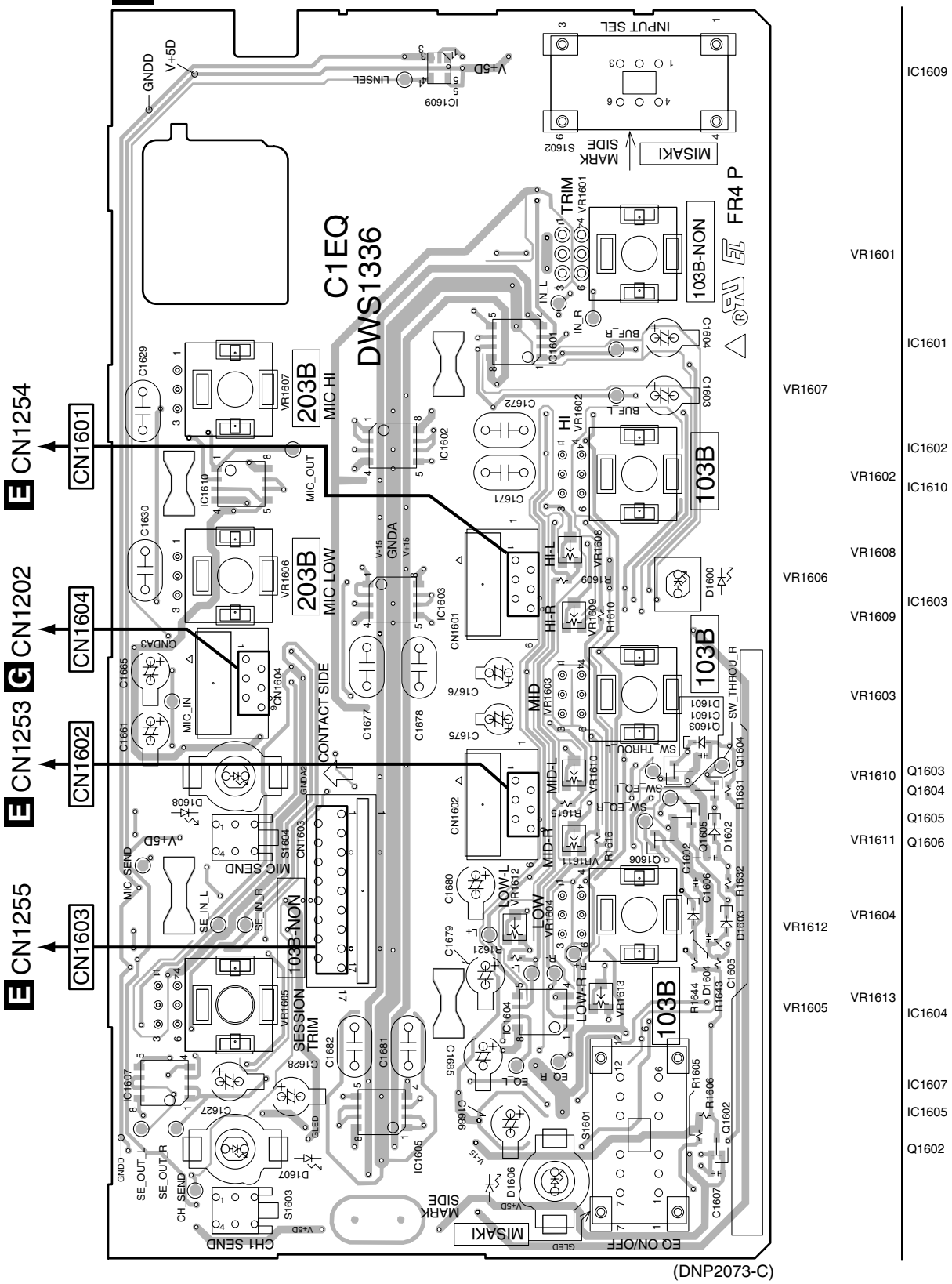

(DNP2073-C)

SIDE B

SIDE B

C C1EQ ASSY

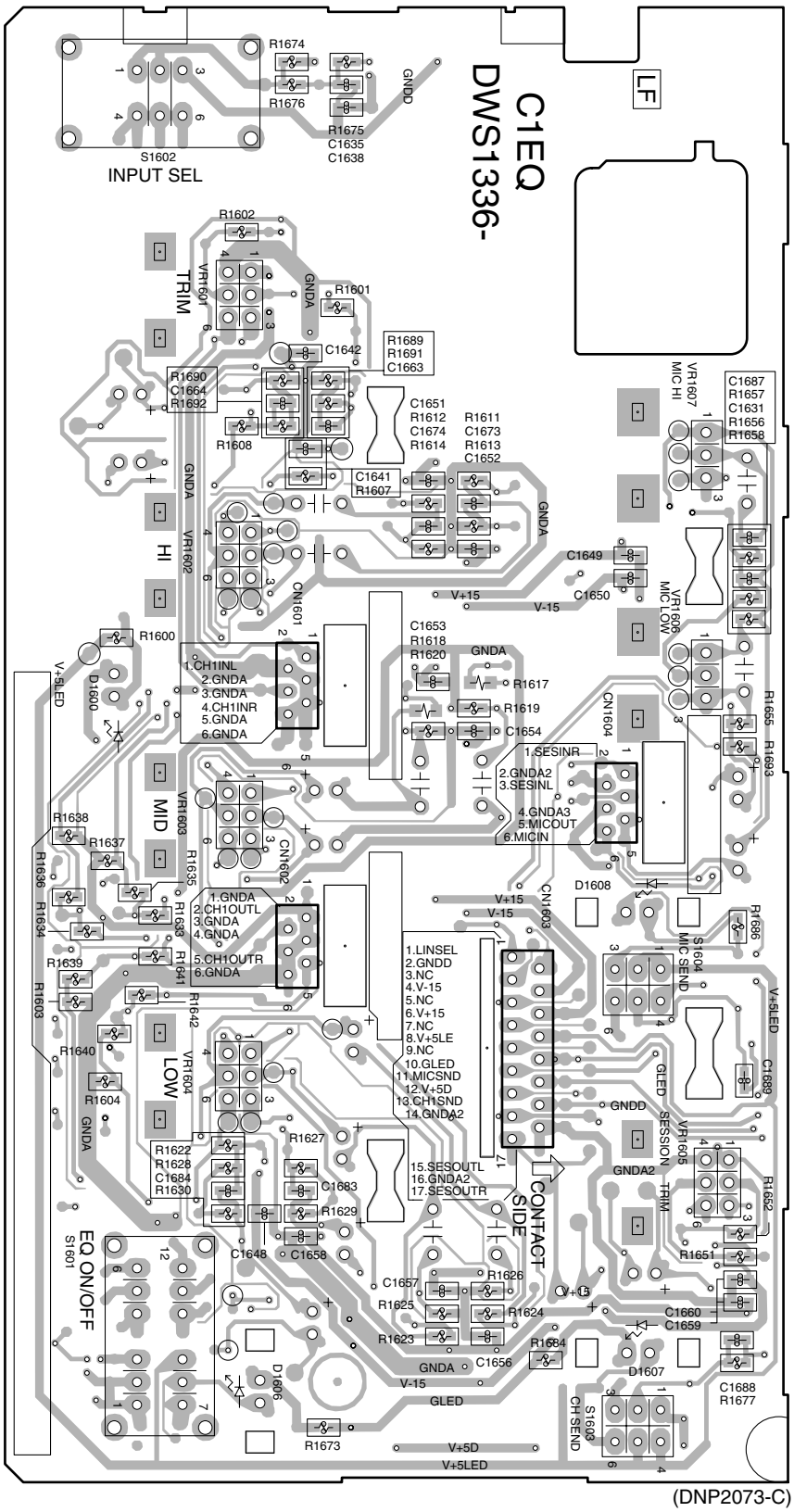

(DNP2073-C)

C

C

4.4 C2 EQ ASSY

SIDE A

SIDE A

D C2EQ ASSY

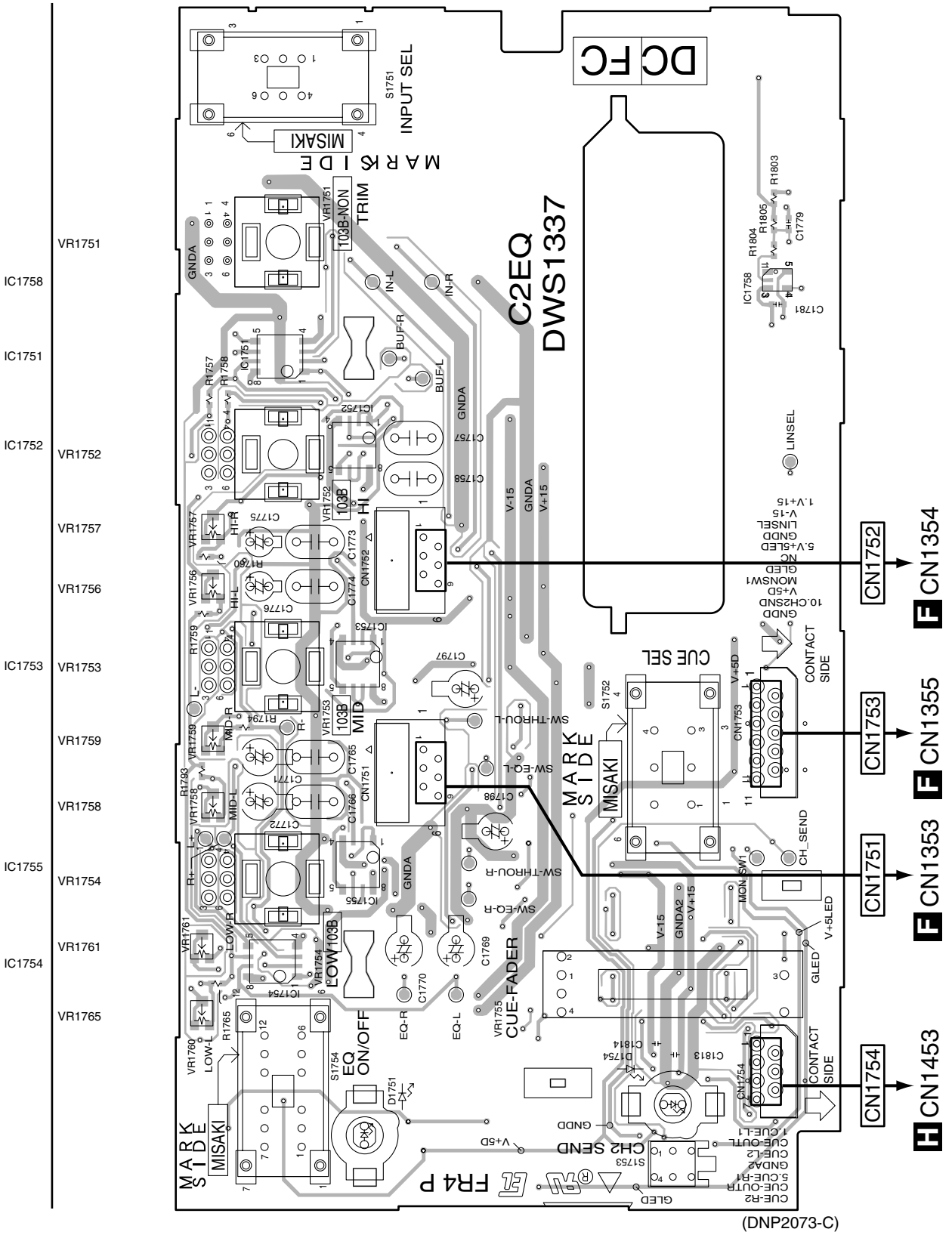

SIDE B

SIDE B

D C2EQ ASSY

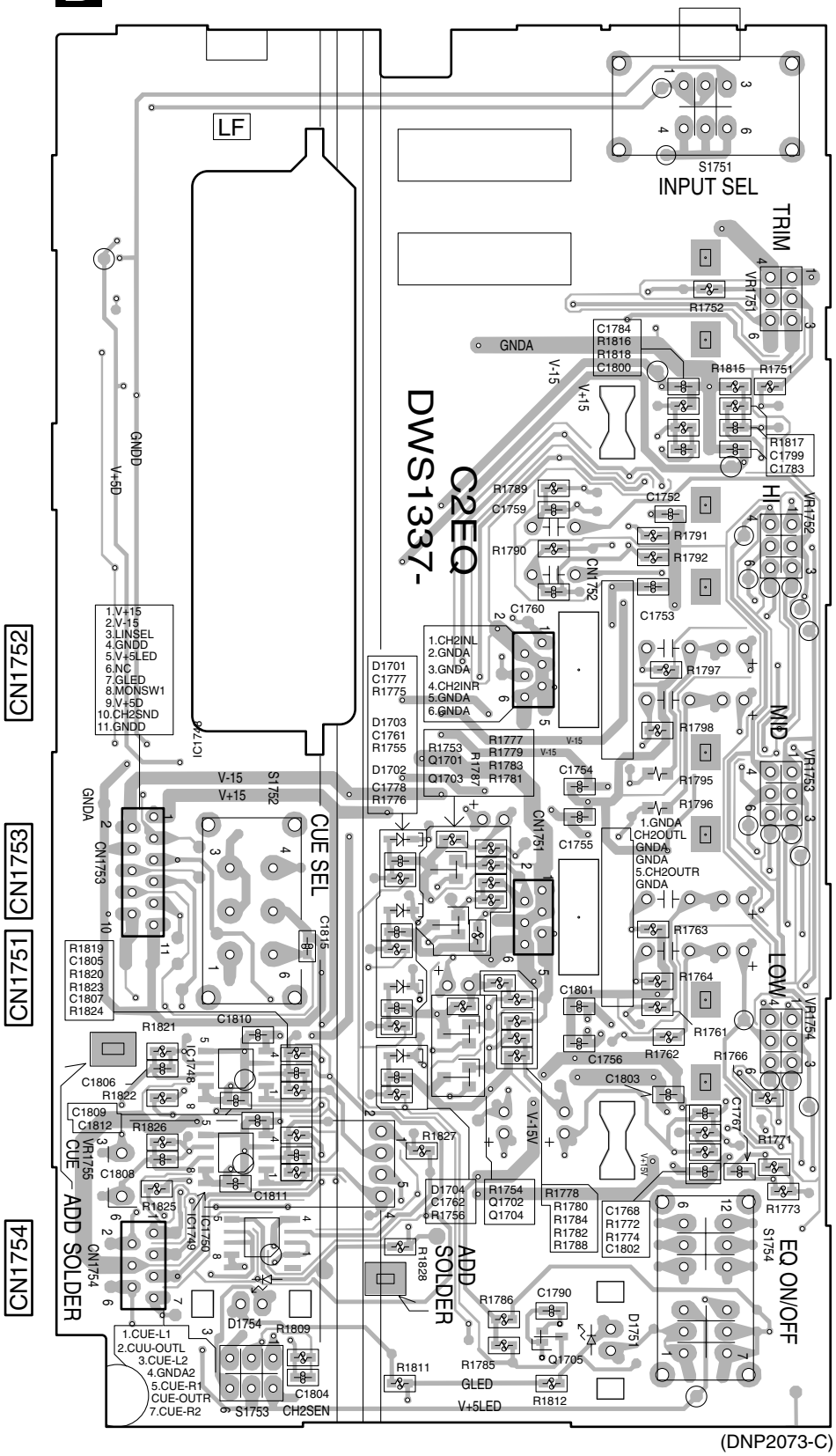

(DNP2073-C)

4.5 C1BF ASSY

SIDE A

SIDE B

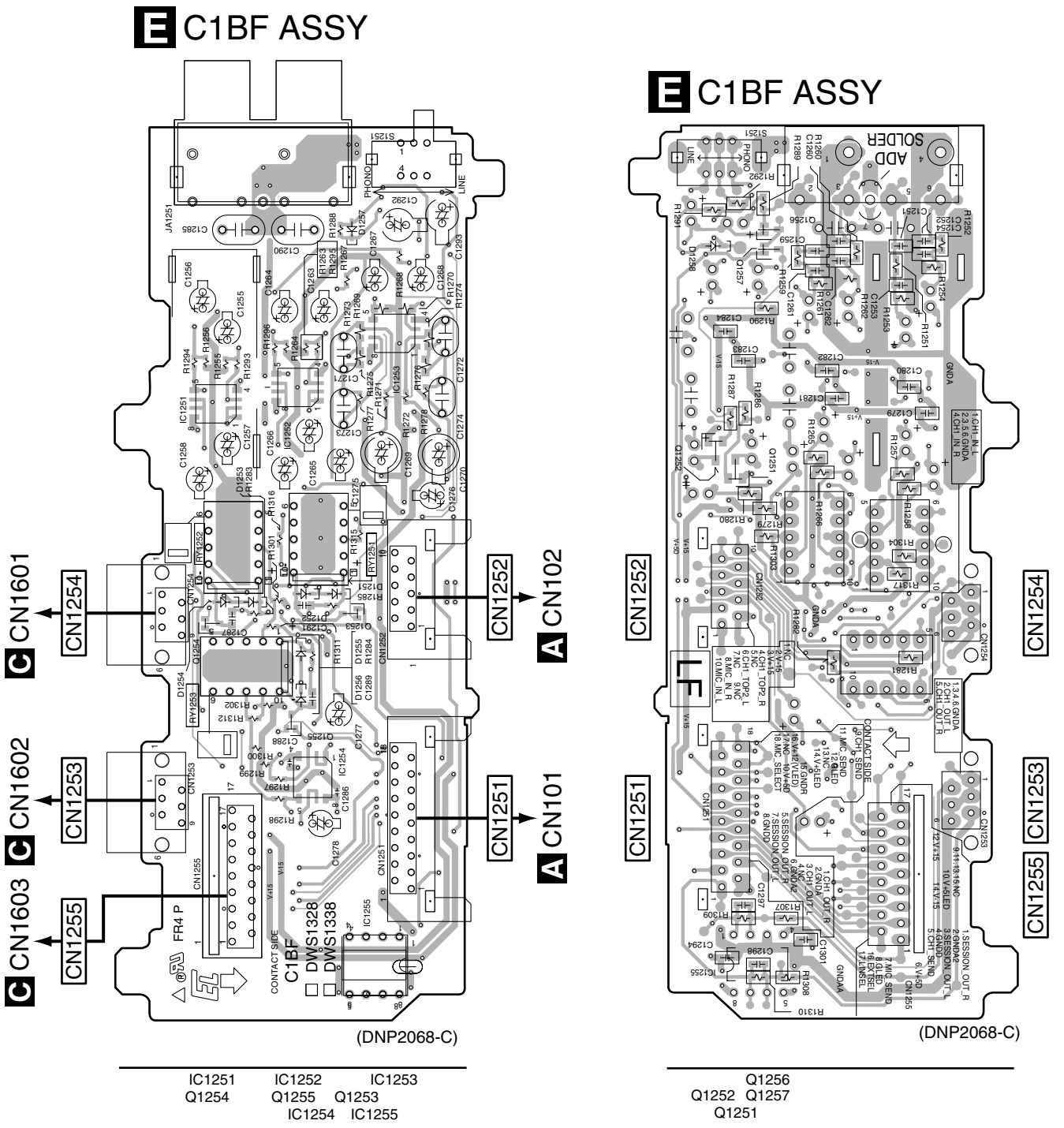

4.6 C2BF ASSY

SIDE A

SIDE B

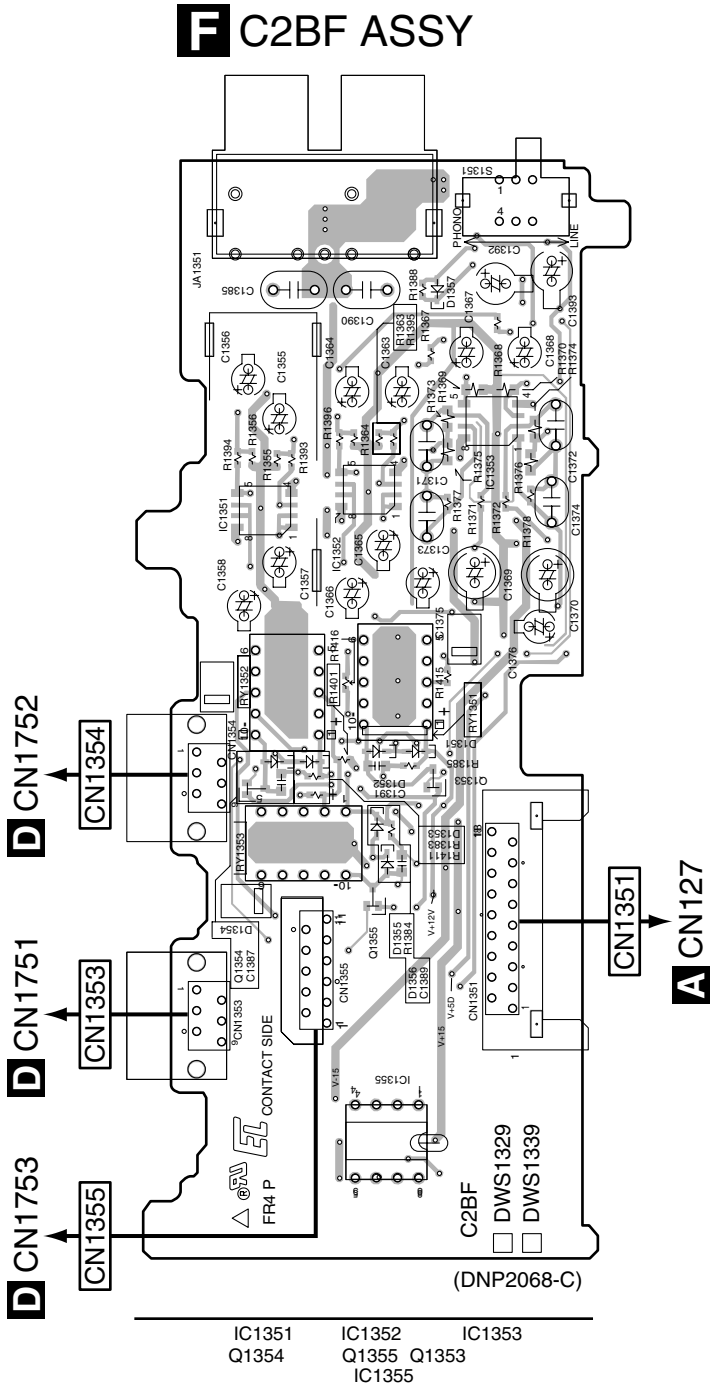

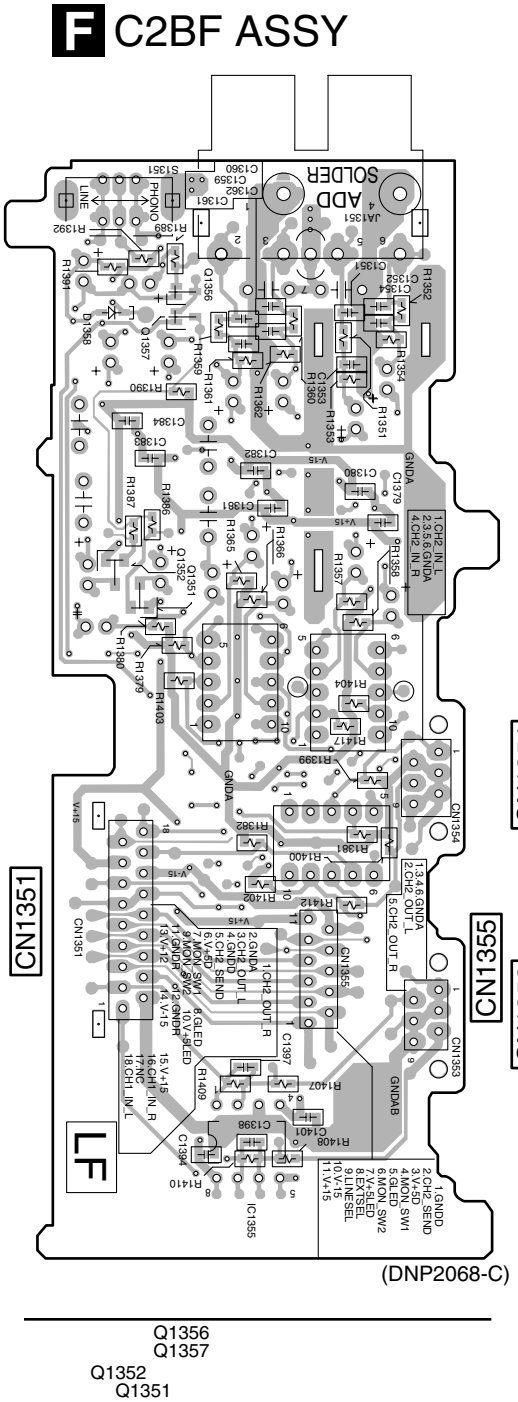

4.7 MICB ASSY

SIDE A

SIDE B

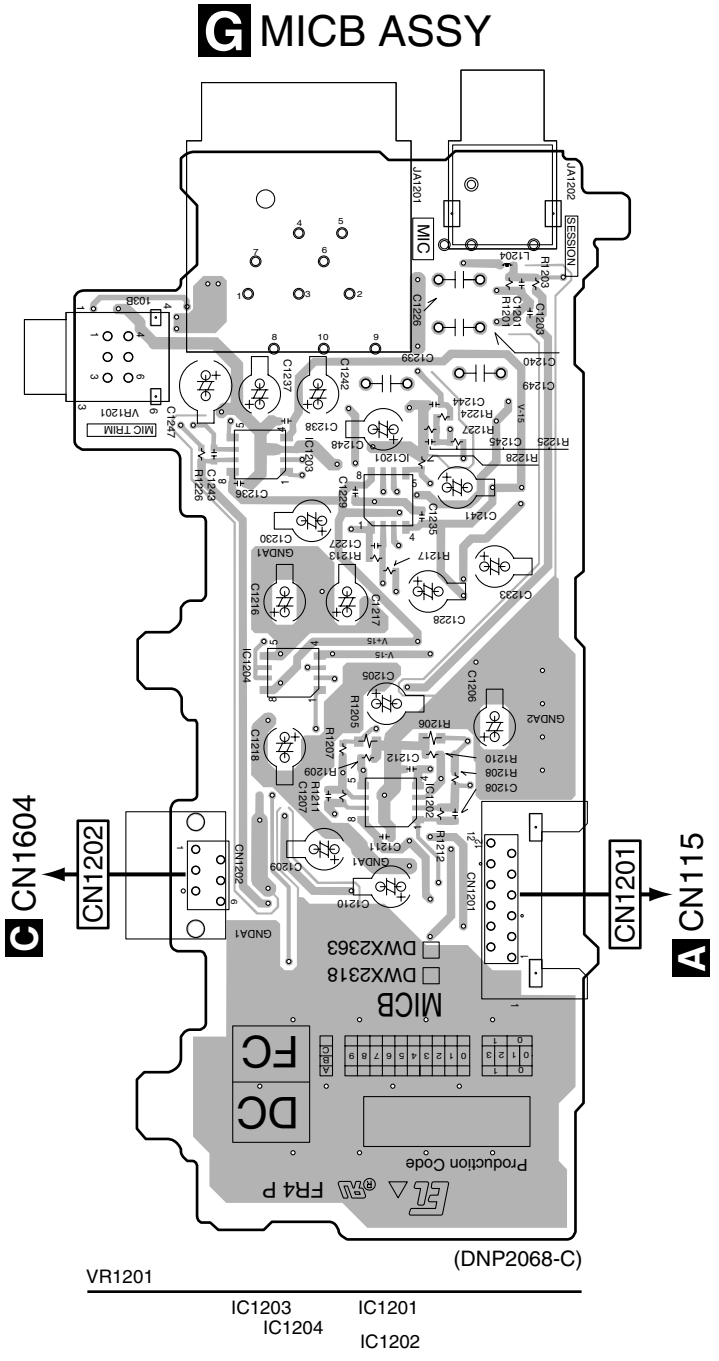

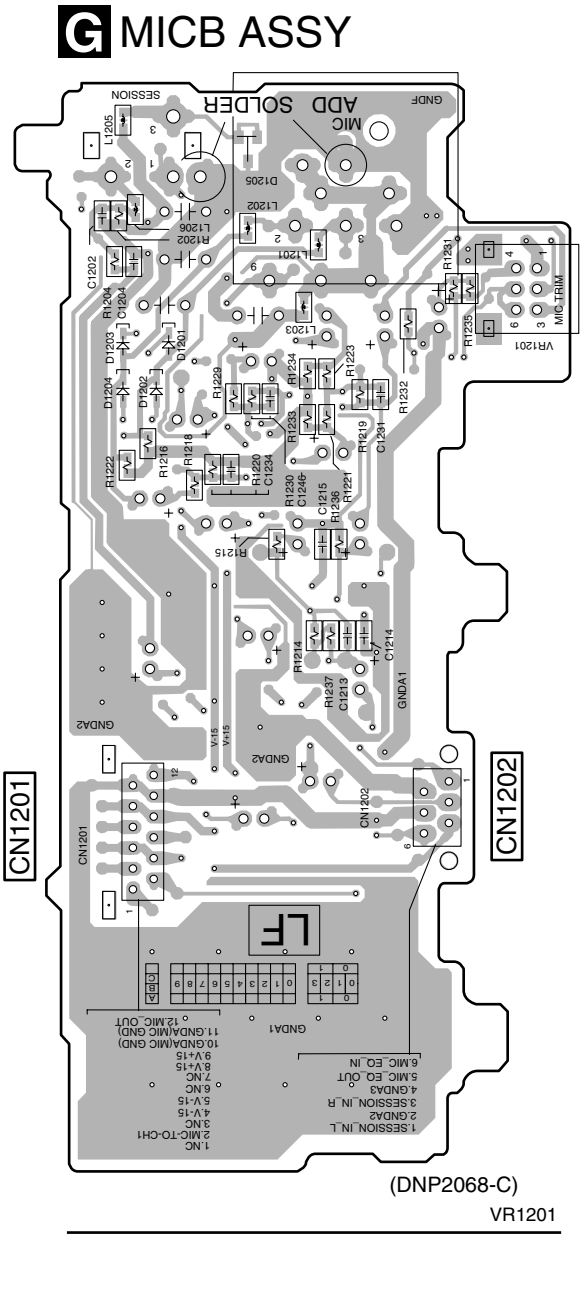

4.8 HPBO ASSY

SIDE A

SIDE B

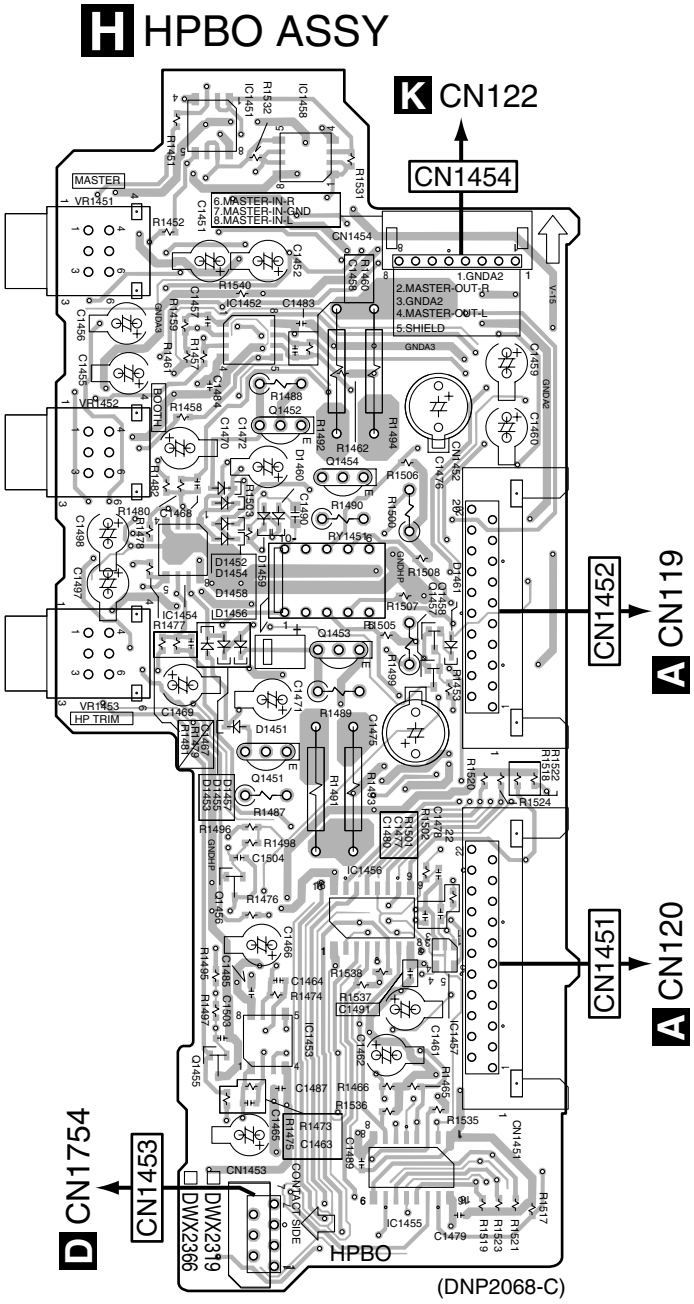

VR1451
VR1452
VR1453

IC1451 IC1458
IC1452
IC1454 Q1452 Q1454 Q1458
Q1451 Q1453 Q1457
Q1456 IC1456 IC1457
Q1455 IC1453 IC1455

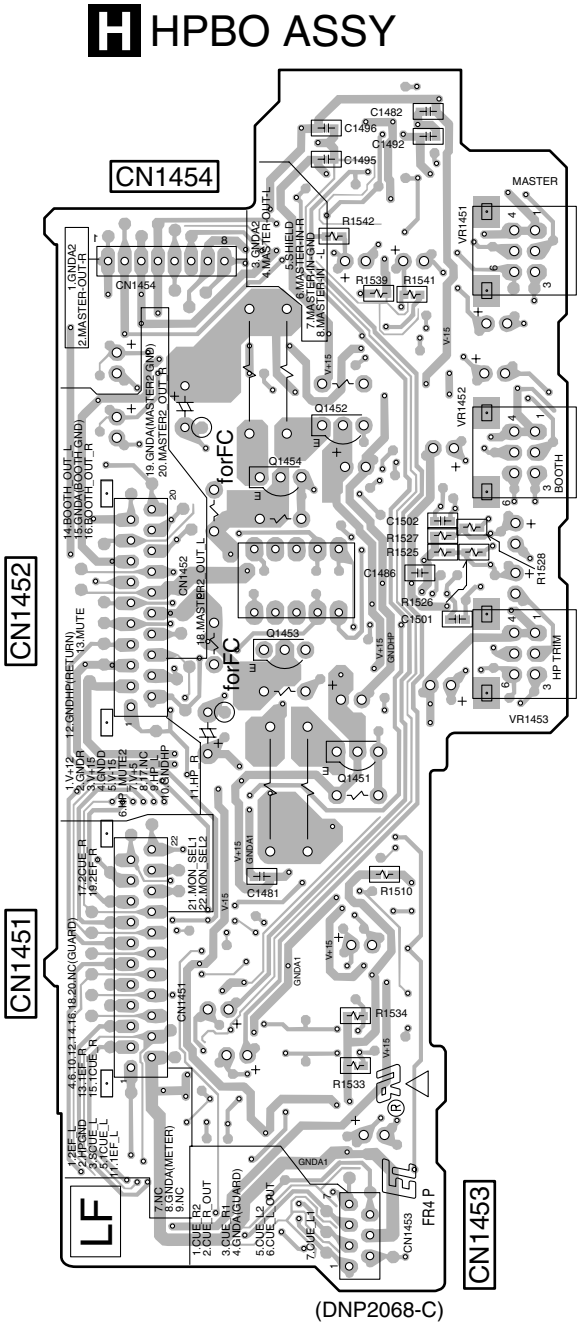

VR1451
VR1452
VR1453

Q1454 Q1452
Q1453 Q1451

4.9 LVMR, C1TR, C2TR, FVA1,FVA2 and FDVR ASSYS

SIDE A

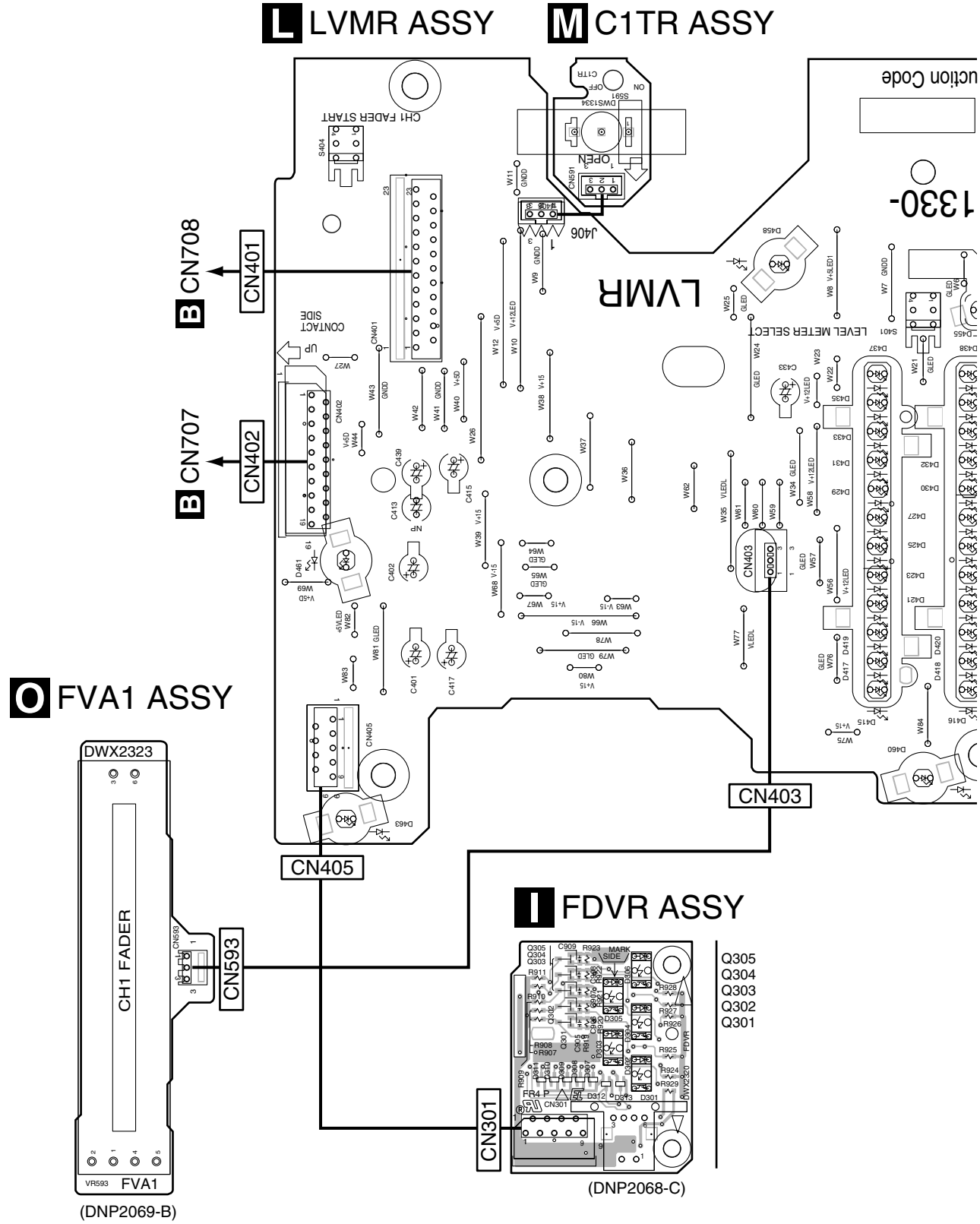

SIDE A

N C2TR ASSY

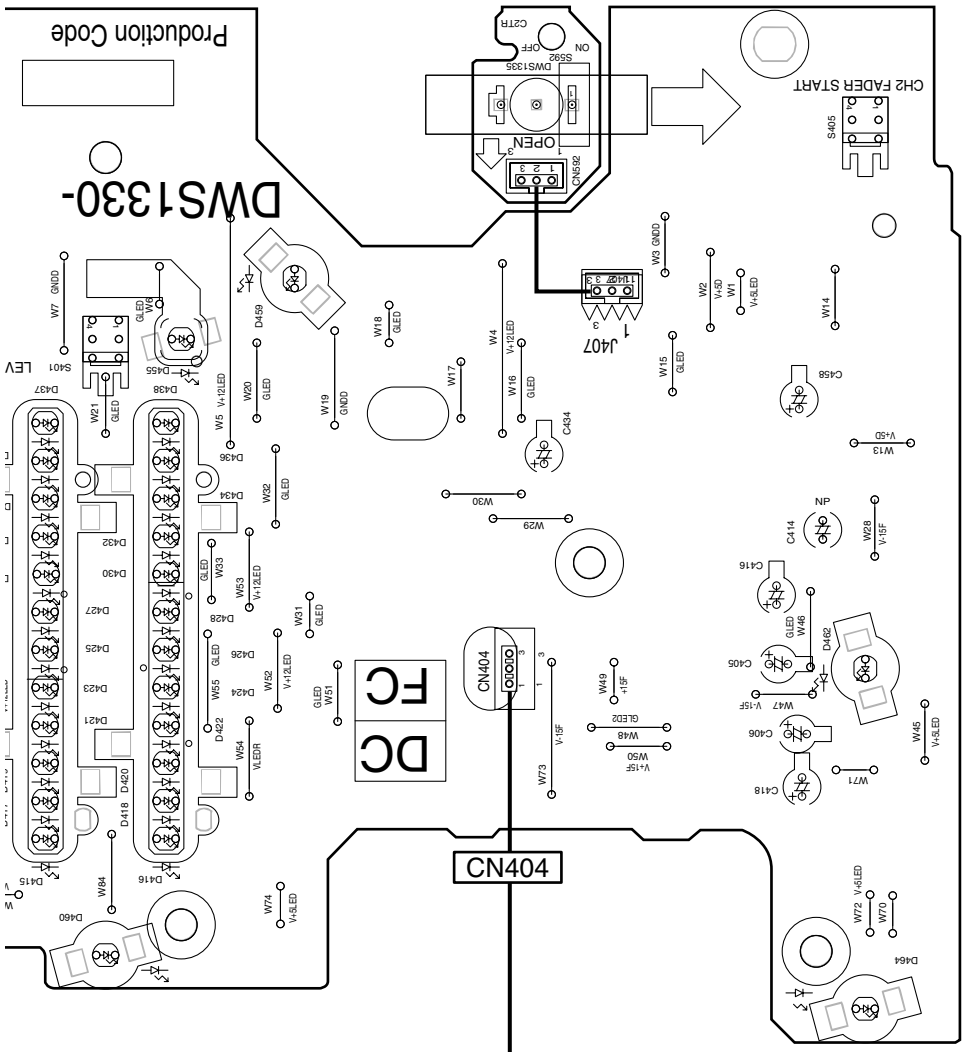

P FVA2 ASSY

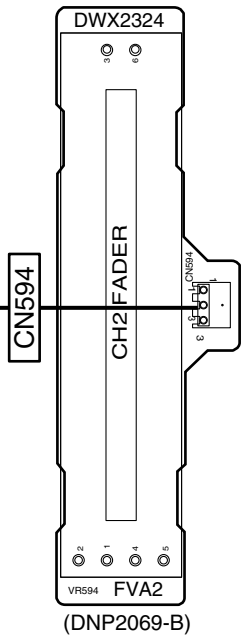

SIDE B

L LVMR ASSY

N C2TR ASSY

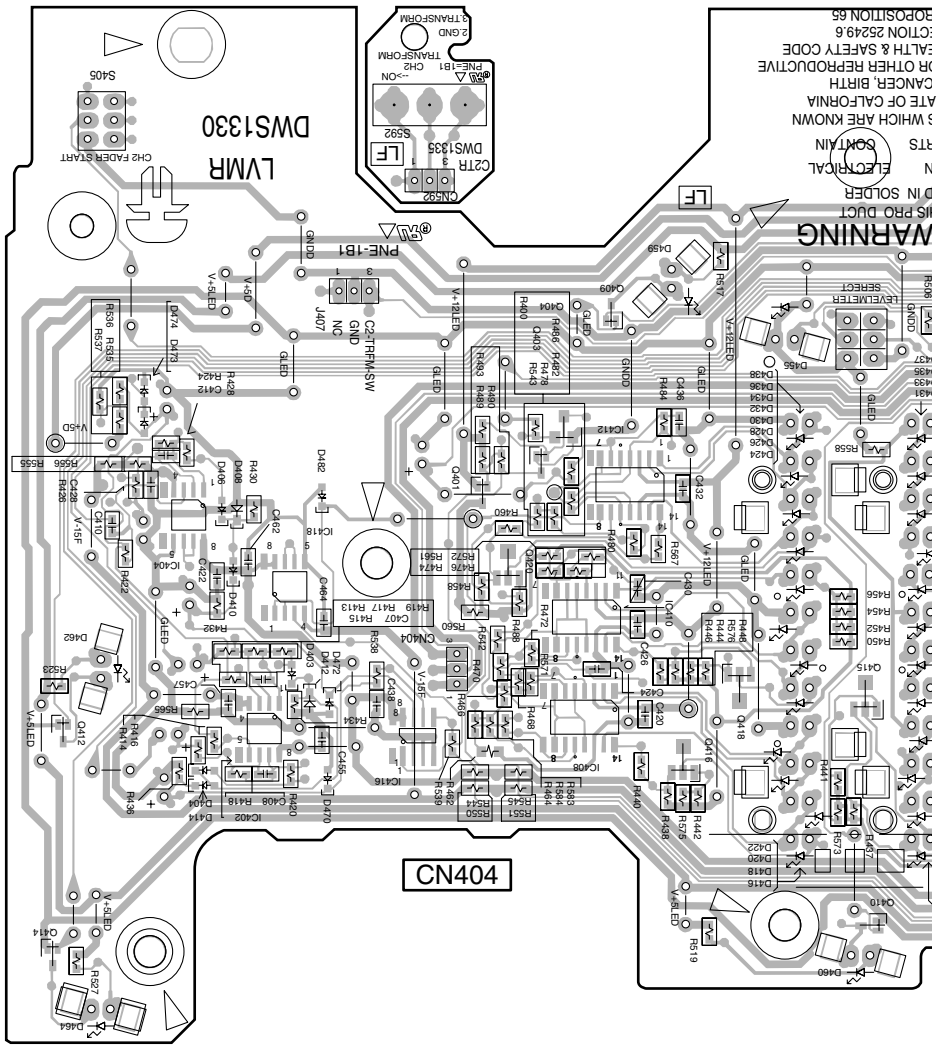

P FVA2 ASSY

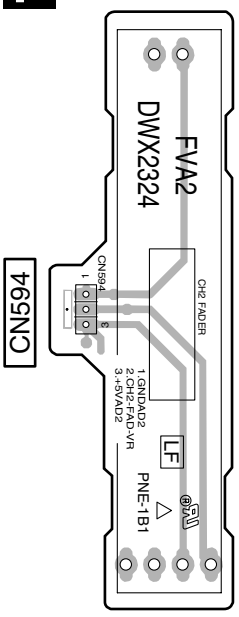

(DNP2069-B)

SIDE B

Q405 Q408 IC411
Q415 Q419 IC409 Q402 IC413 IC403
Q410 IC407 Q417 IC417 IC401 Q413 Q411

M C1TR ASSY

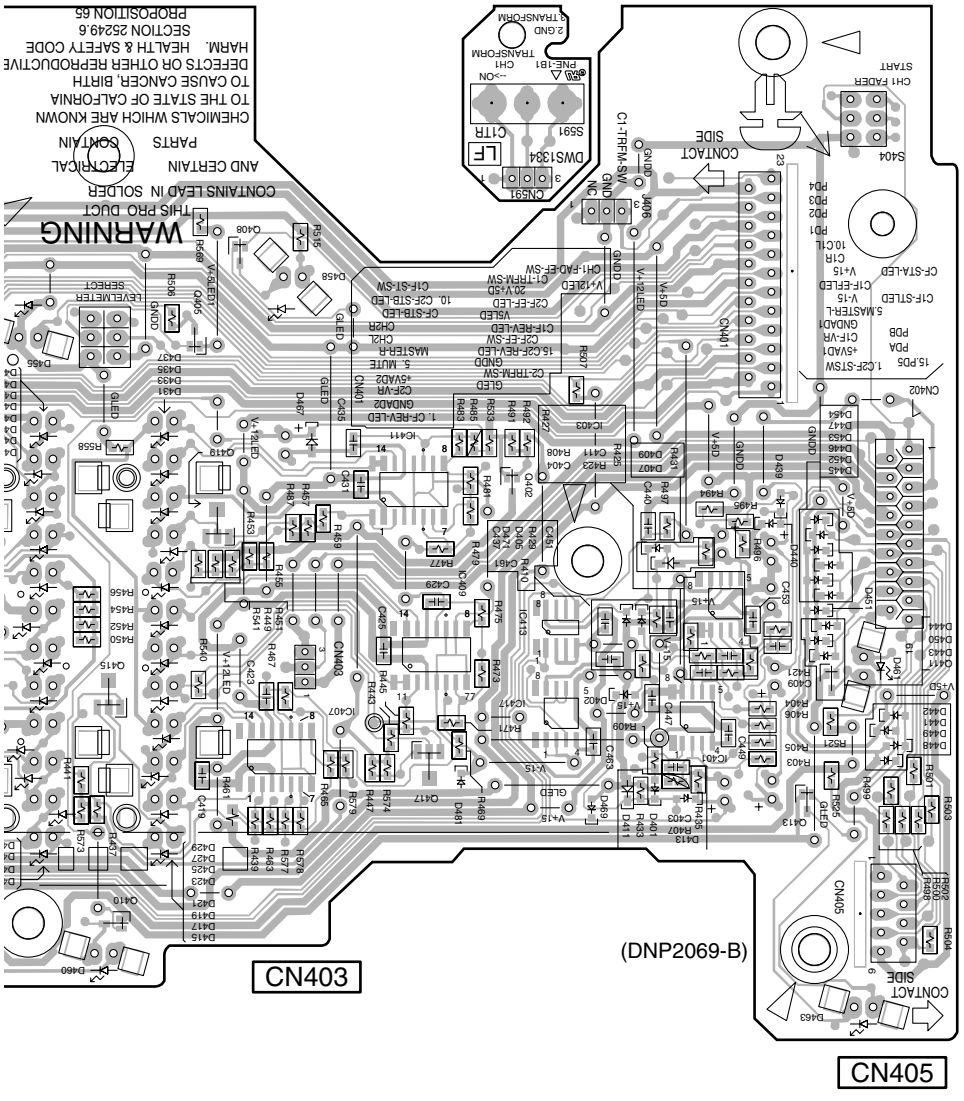

O FVA1 ASSY

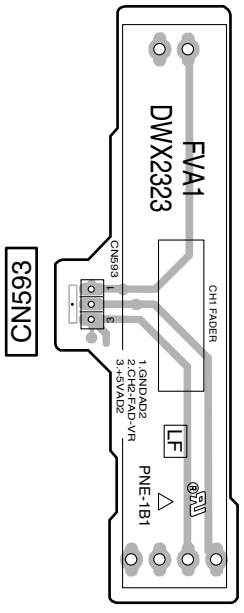

I FDVR ASSY

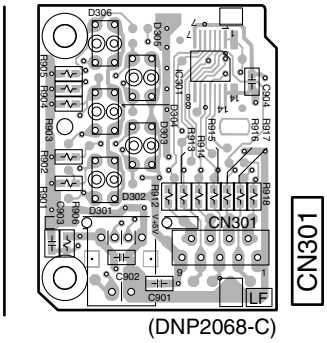

4.10 SDRT ASSY

SIDE A

SIDE B

J SDRT ASSY

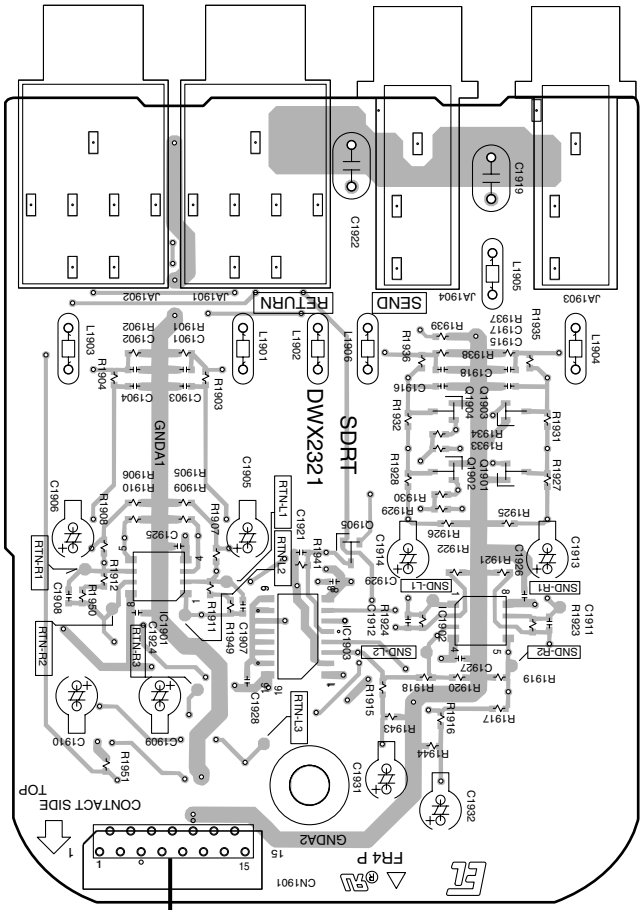

CN1901

A CN116

J SDRT ASSY

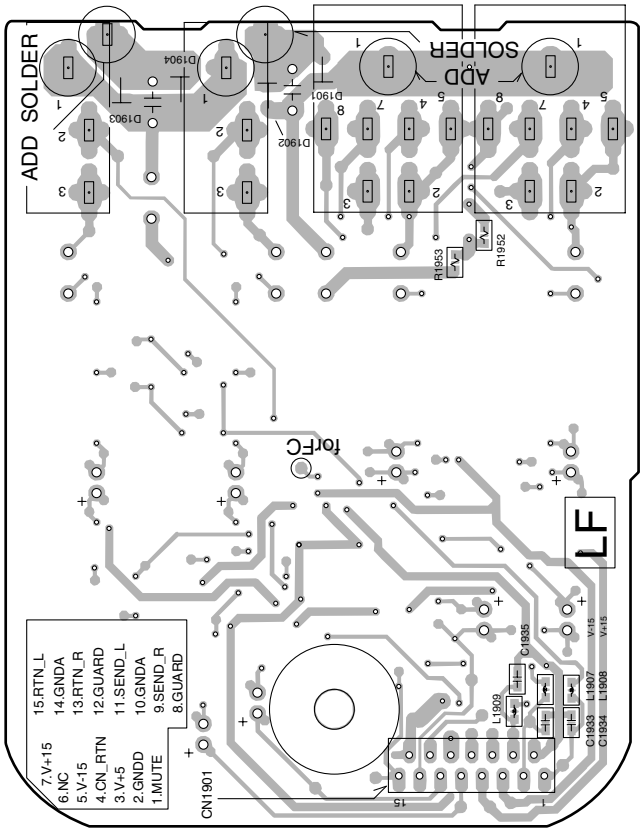

CN1901

IC1901 Q1905 IC1903 Q1904 Q1903 Q1902 Q1901 IC1902

4.11 XLR ASSY

SIDE A

K XLR ASSY

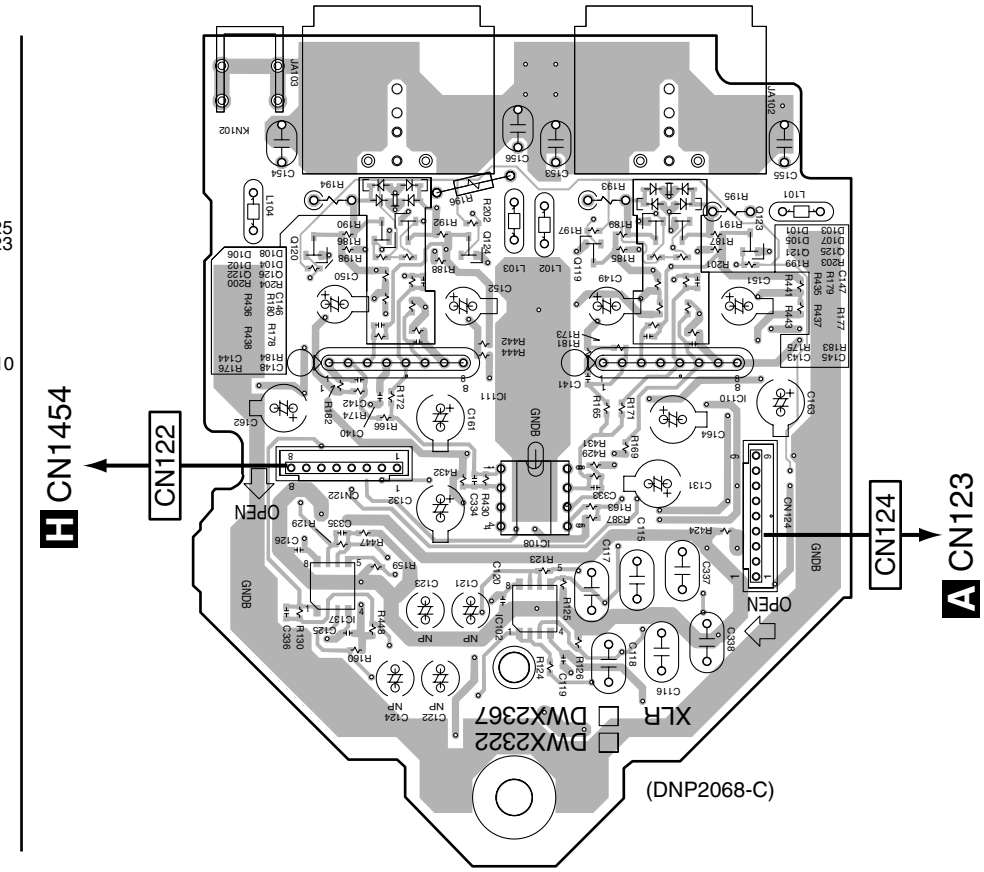

SIDE A

SIDE B

K XLR ASSY

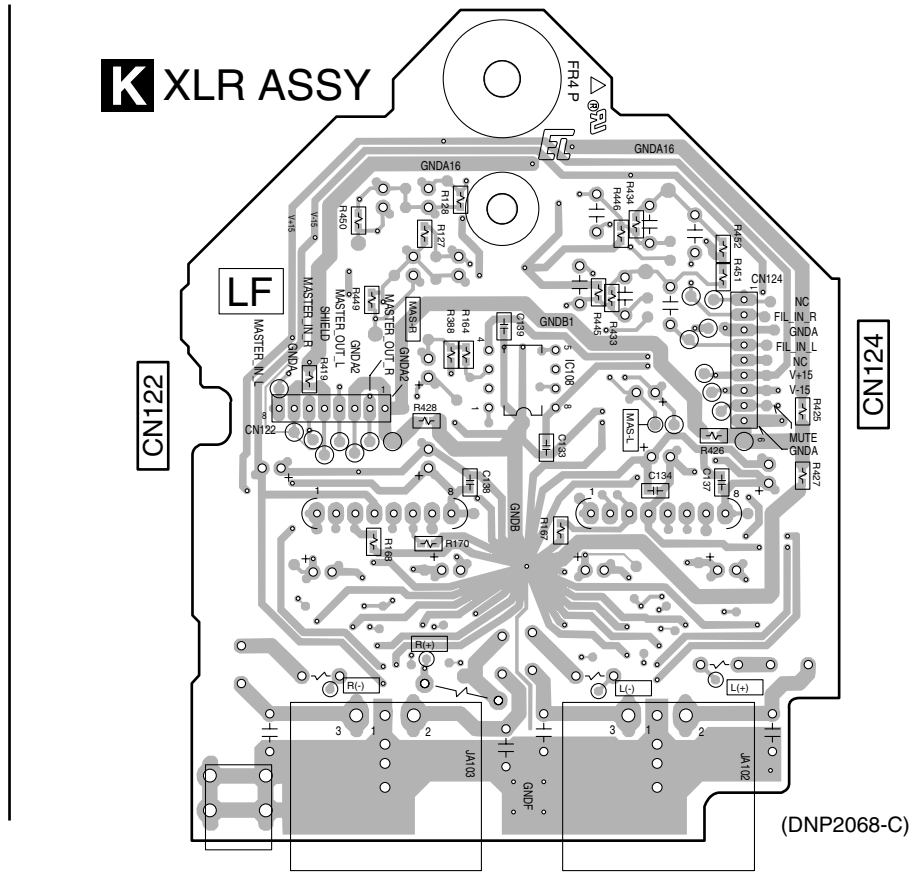

SIDE B

K **K**

4.12 CFVR, RVSW and FSSW ASSYS

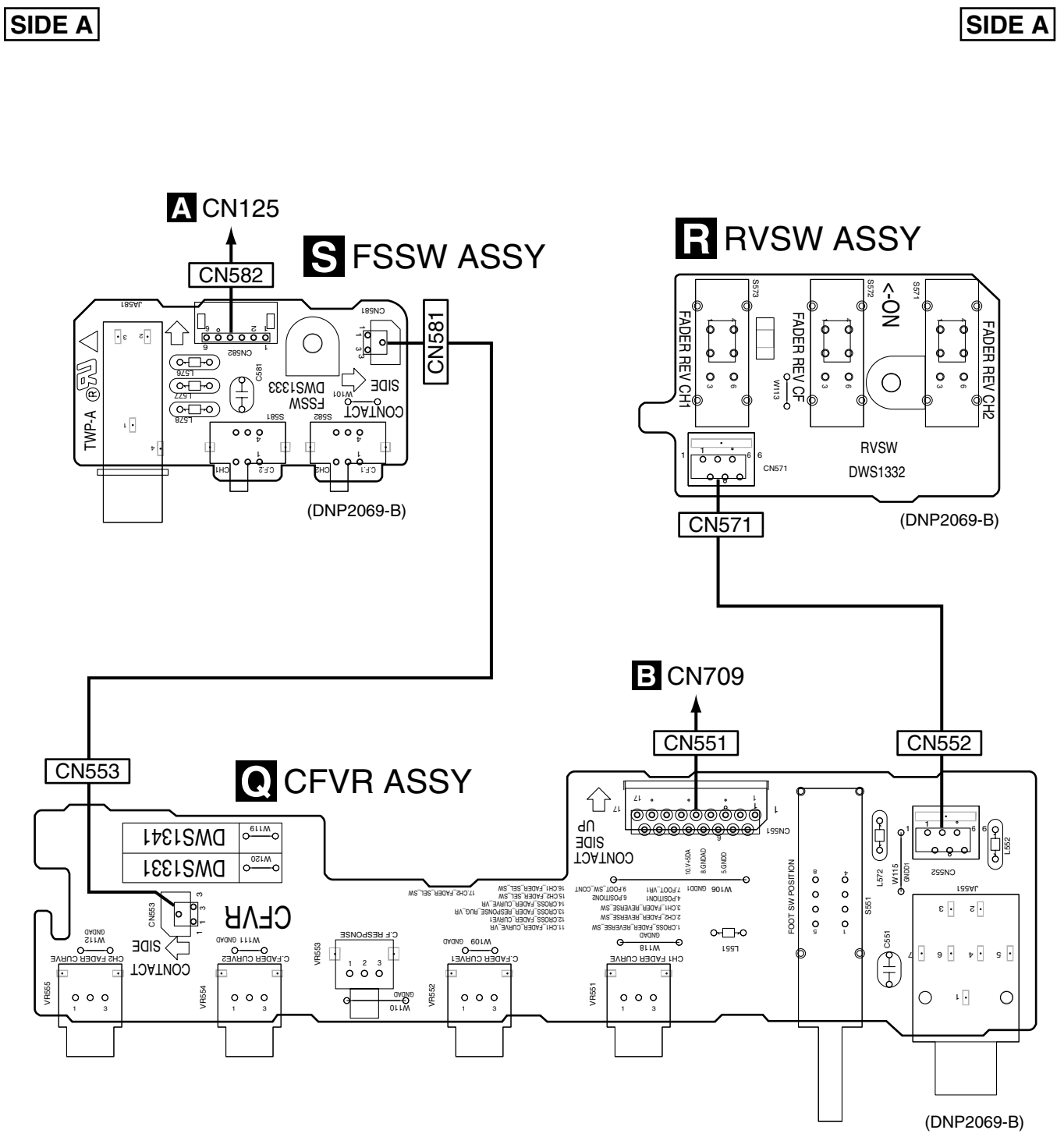

SIDE B

SIDE B

R RVSW ASSY

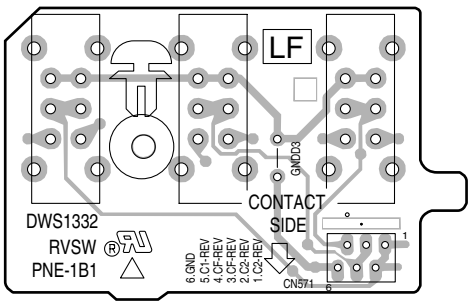

S FSSW ASSY

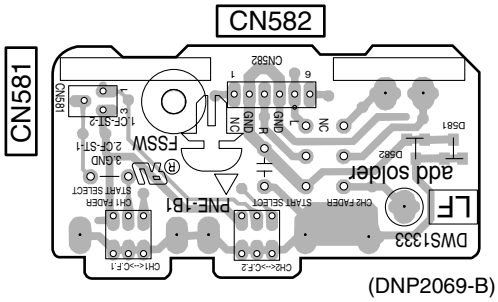

Q CFVR ASSY

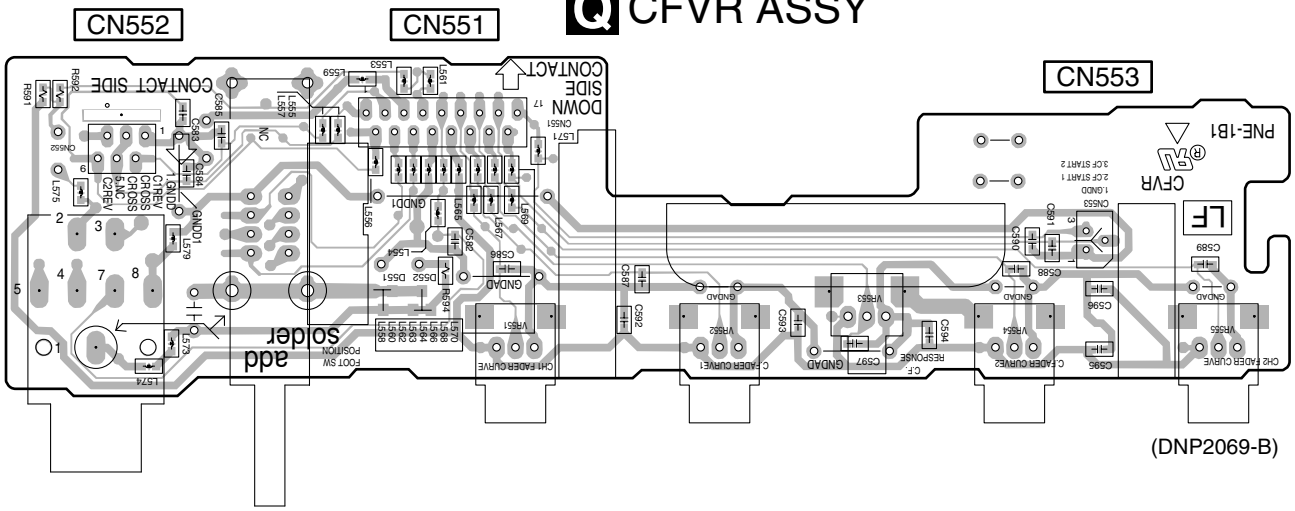

4.13 SW POWER SUPPLY ASSY

SIDE A

SIDE A

T SW POWER SUPPLY

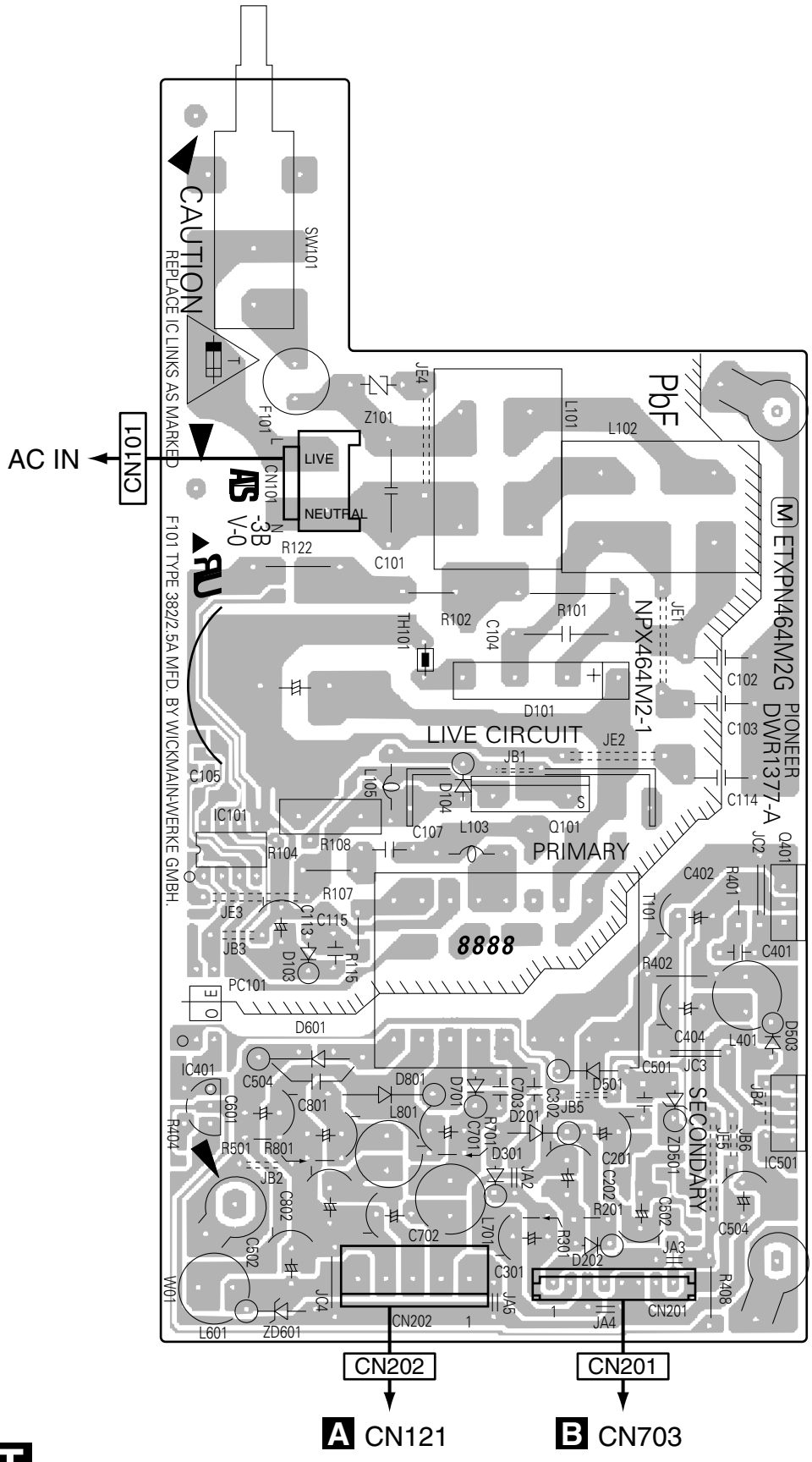

IC101 Q101

Q401

IC401 IC501

SIDE B

SIDE B

T SW POWER SUPPLY

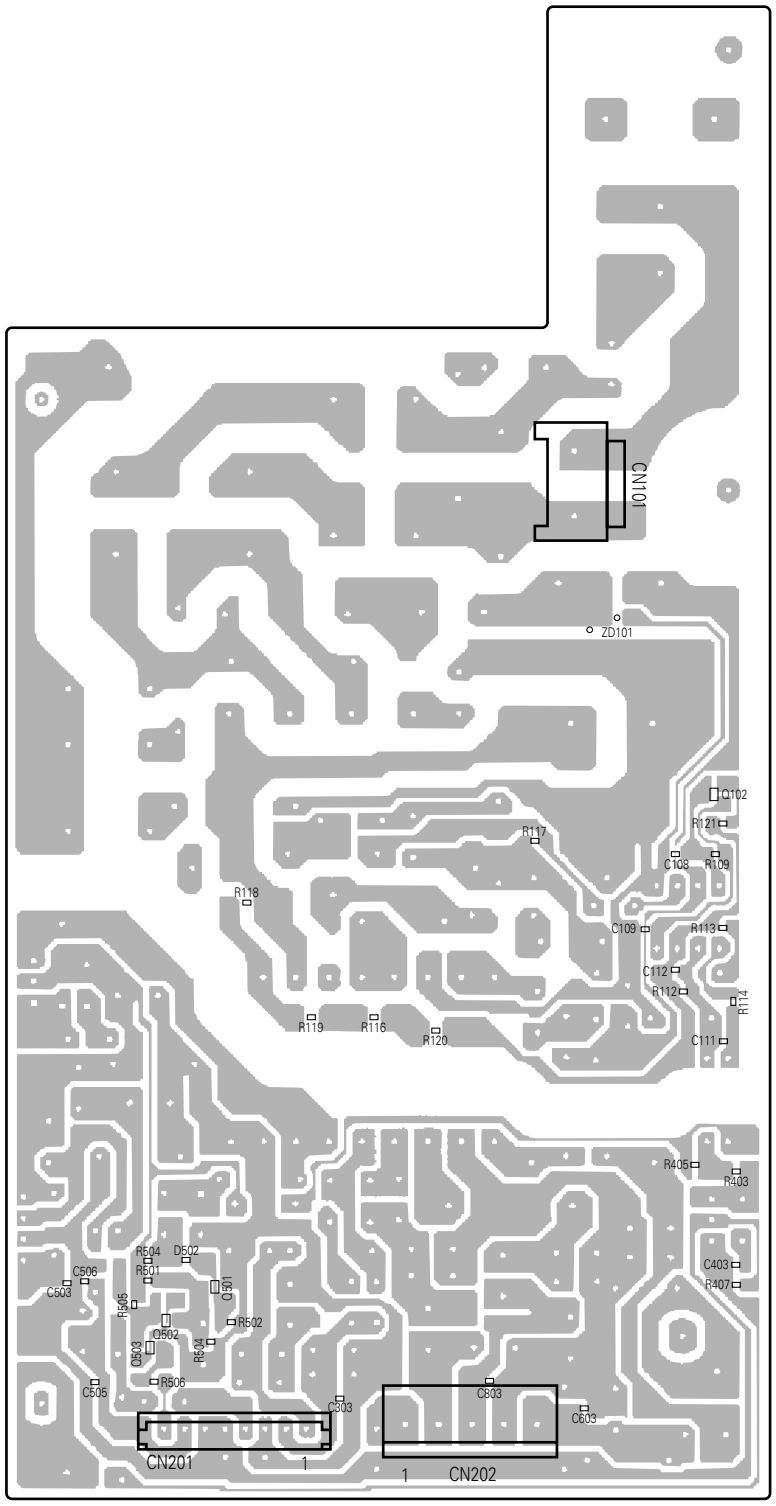

Q102

Q501
Q502
Q503

CN101

CN201

CN202

5. PCB PARTS LIST

NOTES:
- *Parts marked by "NSP" are generally unavailable because they are not in our Master Spare Parts List.*
- *The ⚠ mark found on some component parts indicates the importance of the safety factor of the part. Therefore, when replacing, be sure to use parts of identical designation.*
- *When ordering resistors, first convert resistance values into code form as shown in the following examples.*

Ex.1 When there are 2 effective digits (any digit apart from 0), such as 560 ohm and 47k ohm (tolerance is shown by J=5%, and K=10%).

560 Ω	→ *56 x 10¹* →	*561*	*RD1/4PU 5 6 1 J*
47k Ω	→ *47 x 10³* →	*473*	*RD1/4PU 4 7 3 J*
0.5 Ω	→ *R50*		*RN2H R 5 0 K*
1 Ω	→ *1R0*		*RS1P 1 R 0 K*

Ex.2 When there are 3 effective digits (such as in high precision metal film resistors).

5.62k Ω	→ *562 x 10¹* →	*5621*	*RN1/4PC 5 6 2 1 F*

LIST OF ASSEMBLIES

Mark	No.	Description	Part No.
NSP	1	..MOTHER ASSY	DWM2174
	2	..C1EQ ASSY	DWS1336
	2	..C2EQ ASSY	DWS1337
	2	..CONT ASSY	DWX2335
	2	..MAIN ASSY	DWX2338
NSP	1	..JACK ASSY	DWM2171
	2	..C1BF ASSY	DWS1338
	2	..C2BF ASSY	DWS1339
	2	..MICB ASSY	DWX2363
	2	..HPBO ASSY	DWX2319
	2	..FDVR ASSY	DWX2320
	2	..SDRT ASSY	DWX2321
	2	..XLR ASSY	DWX2322
NSP	1	..SUB ASSY	DWM2172
	2	..LVMR ASSY	DWS1330
	2	..CFVR ASSY	DWS1341
	2	..RVSW ASSY	DWS1332
	2	..FSSW ASSY	DWS1333
	2	..C1TR ASSY	DWS1334
	2	..C2TR ASSY	DWS1335
	2	..FVA1 ASSY	DWX2323
	2	..FVA2 ASSY	DWX2324
⚠	1	..SW POWER SUPPLY ASSY	DWR1377

A MAIN ASSY

Mark	No.	Description	Part No.
SEMICONDUCTORS			
⚠		IC140,IC142,IC143 (400mA)	AEK7004
⚠		IC135	ICP-N15
⚠		IC134	ICP-N20
		IC104,IC118,IC131-IC133	NJM4558MD
		IC112	NJM4580DD
		IC101	NJM5532MD
		IC114-IC117	SSM2018TP
		IC119	TC9215AF
		Q129,Q132,Q136,Q140	2SA1037K
		Q101-Q108,Q113-Q118	2SC3326
		Q141-Q144,Q150,Q151	2SC3326
		Q153	DTA124EK
		Q109,Q149,Q152,Q154	DTC124EK
		D101,D102,D109-D115	1SS355
		D119-D121,D131-D133	1SS355
		D137,D138	NNCD6.2MF
COILS AND FILTERS			
⚠		L101-L104 CHIP BEAD	VTL1105
CAPACITORS			
		C163,C164,C237,C238	CCSRCH101J50
		C250,C251,C304,C305	CCSRCH220J50
		C335-C342	CCSRCH220J50
		C113,C114	CCSRCH270J50
		C176-C179,C188,C189	CCSRCH470J50
		C312,C313	CCSRCH470J50
		C159-C162,C182,C183	CEAL100M35
		C194,C195,C284-C287	CEAL100M35
		C292,C293,C300-C303	CEAL100M35
		C331,C332	CEAL100M35
		C186,C187,C196,C197	CEALNP100M35
		C200,C201,C235,C236	CEAT100M50
		C329,C330	CEAT100M50
		C269,C271,C273,C274	CEAT101M25
		C276,C277	CEAT101M25
		C327,C328	CEAT102M25
		C167,C241	CFTLA103J50
		C294,C295,C321-C324	CKSQYB105K16
		C111,C112,C157,C158	CKSRYB103K50
		C172-C175,C184,C185	CKSRYB103K50
		C190,C191,C198,C199,C202	CKSRYB103K50
		C204,C242,C243,C245,C246	CKSRYB103K50
		C248,C249,C316-C319	CKSRYB103K50
		C325,C326	CKSRYB103K50
		C314,C315	CKSRYB104K25
		C101-C104,C254-C257	CKSRYB473K50
		C262,C263,C351,C352	CKSRYB473K50
		C165,C166,C239,C240	CQMA152J50
		C244,C247	CQMA473J50
RESISTORS			
		R215,R216,R275,R276	RN1/16SE1000D
		R205-R208,R213,R214	RN1/16SE1003D
		R225,R226,R239,R240	RN1/16SE1003D
		R263,R264,R277,R278	RN1/16SE1003D
		R389-R394	RN1/16SE1003D
		R119,R120,R221-R224	RN1/16SE1802D
		R235-R238	RN1/16SE1802D
		R433-R436	RN1/16SE2202D
		R151,R152	RN1/16SE2702D
		R306,R307	RN1/16SE3302D
		R121,R122	RN1/16SE3901D
		R209-R212,R279-R282	RN1/16SE4300D
		R101-R108,R115,R118	RN1/16SE5602D

Mark No.	Description	Part No.
	R159-R162,R167-R170	RN1/16SE5602D
	R157,R158	RN1/16SE6800D
	R441,R442	RS1/16S2002F
	R443,R444	RS1/16S8201F
	Other Resistors	RS1/16S###J

OTHERS

CN116	15P FFC CONNECTOR	52045-1545
CN118	33P FFC CONNECTOR	52045-3345
CN121	5P VH CONNECTOR	B5P-VH
CN125	KR CONNECTOR	B6B-PH-K-S
CN123	KR CONNECTOR	B9B-PH-K-S
J101	EARTH LEAD UNIT	DDF1031
JA101	4P PIN JACK	DKB1057
JA104,JA105	REMOTE CONTROL JACK	RKN1004
CN102	B TO B CONNECTOR 10P	VKN1398
CN115	B TO B CONNECTOR 12P	VKN1399
CN101,CN127	B TO B CONNECTOR 18P	VKN1402
CN119	B TO B CONNECTOR 20P	VKN1403
CN120	B TO B CONNECTOR 22P	VKN1404
KN102	WRAPPING TERMINAL	VNF1084

B CONT ASSY

SEMICONDUCTORS

⚠	IC734 (400mA)	AEK7004
⚠	IC733 (500mA)	AEK7005
⚠	IC732	ICP-N20
	IC736	NJM4580MD
	IC716	NJM78L05UA
	IC717	NJM79L05UA
	IC718	PD3453A8
	IC720,IC735	TC74VHC14FT
	IC737	TC7WH125FU
	Q710	2SC1740S
	Q709	2SC2458
	Q702,Q711	DTA124EUA
	Q703-Q707	DTC124EUA
	D701	1SS355

CAPACITORS

C992-C998	CCSRCH121J50
C805,C820,C943,C947	CEAT100M50
C850,C868,C926,C990	CEAT101M10
C825,C927	CEAT330M35
C812,C813,C824,C848	CKSRYB103K50
C851,C852,C854,C862,C863	CKSRYB103K50
C865,C869,C870,C874-C878	CKSRYB103K50
C880,C885,C887-C889	CKSRYB103K50
C891,C892,C898,C904,C907	CKSRYB103K50
C909,C922,C924,C939,C944	CKSRYB103K50
C946,C991	CKSRYB103K50
C823,C829,C834,C838	CKSRYB104K25
C811,C830	CKSRYB153K50
C818,C835	CKSRYB222K50
C819,C836	CKSRYB682K50

RESISTORS

R841,R843,R845,R853	RAB4C0R0J
VR700-VR703 (100k)	CCP1402

Mark No.	Description	Part No.
	Other Resistors	RS1/16S###J

OTHERS

CN709	17P FFC CONNECTOR	52045-1745
CN707	19P FFC CONNECTOR	52045-1945
CN708	23P FFC CONNECTOR	52045-2345
CN706	33P FFC CONNECTOR	52045-3345
CN703	8P TOP POST	B8B-EH
X700	CHIP CERAMIC RESONATOR (24.57MHz)	DSS1139
CN702	KR CONNECTOR	S6B-PH-K-S

C C1EQ ASSY

SEMICONDUCTORS

IC1610	NJM4558MD
IC1602-IC1605,IC1607	NJM4580MD
IC1601	NJM5532MD
IC1609	TC7S14F
Q1603-Q1606	2SC3326
Q1602	DTA124EUA
D1601-D1604	1SS355
D1606	SLI-343URCW
D1607,D1608	SLI-343YCW
D1600	TLGE68TG

SWITCHES AND RELAYS

S1602	DSK1029
S1601	DSK1035
S1603,S1604	RSG1032

CAPACITORS

C1663,C1664	CCSRCH101J50
C1631	CCSRCH270J50
C1673,C1674	CCSRCH271J50
C1683,C1684	CCSRCH330J50
C1603,C1604,C1627,C1628,C1661	CEJQ100M50
C1665,C1679,C1680,C1685,C1686	CEJQ100M50
C1630	CFTLA104J50
C1671,C1672	CFTNA473J50
C1681,C1682	CFTNA563J50
C1607,C1638,C1641,C1642	CKSRYB103K50
C1648-C1654,C1656-C1660	CKSRYB103K50
C1688,C1689	CKSRYB103K50
C1635	CKSRYB104K25
C1687	CKSRYB272K50
C1601,C1602,C1605,C1606	CKSRYB473K50
C1677,C1678 (5600pF/50V)	DCE1009
C1675,C1676 (0.47uF/50V)	DCH1192

RESISTORS

R1617,R1618	RN1/10SE1300D
R1601,R1602,R1651,R1652	RN1/16SE1001D
R1689,R1690	RN1/16SE1002D
R1603,R1604,R1637,R1638	RN1/16SE1003D
R1633,R1634,R1641,R1642	RN1/16SE1502D
R1611,R1612,R1623,R1624	RN1/16SE1800D
R1609,R1610,R1615,R1616	RN1/16SE1801D
R1621,R1622	RN1/16SE1801D
R1635,R1636,R1639,R1640	RN1/16SE1802D
R1691,R1692	RN1/16SE1802D
R1625,R1626	RN1/16SE4702D
R1607,R1608,R1627,R1628	RN1/16SE5101D

Mark	No.	Description	Part No.
	R1658		RN1/16SE5601D
	R1613,R1614		RN1/16SE6202D
	R1619,R1620		RN1/16SE7502D
	VR1602-VR1604 (10K-ohm -B)		DCS1065
	VR1601,VR1605 (10K-ohm -B)		DCS1073
	VR1606,VR1607 (20K-ohm -B)		DCS1074
	VR1608-VR1613 (22k-ohm)		VCP1133
	Other Resistors		RS1/16S###J

OTHERS

CN1603	FFC CONNECTOR 17P	52492-1720
CN1601,CN1602,CN1604	B TO B CONNECTOR 6P	DKN1278

D C2EQ ASSY

SEMICONDUCTORS

	IC1748-IC1750	NJM4558MD
	IC1752-IC1755	NJM4580MD
	IC1751	NJM5532MD
	IC1758	TC7S14F
	Q1701-Q1704	2SC3326
	Q1705	DTA124EUA
	D1701-D1704	1SS355
	D1751	SLI-343URCW
	D1754	SLI-343YCW

SWITCHES AND RELAYS

	S1751	DSK1029
	S1752	DSK1033
	S1754	DSK1035
	S1753	RSG1032

CAPACITORS

	C1799,C1800	CCSRCH101J50
	C1805-C1808	CCSRCH220J50
	C1759,C1760	CCSRCH271J50
	C1767,C1768	CCSRCH330J50
	C1769-C1772,C1797,C1798	CEJQ100M50
	C1757,C1758	CFTNA473J50
	C1765,C1766	CFTNA563J50
	C1752-C1756,C1781,C1783,C1784	CKSRYB103K50
	C1790,C1801-C1804,C1809-C1815	CKSRYB103K50
	C1779	CKSRYB104K25
	C1761,C1762,C1777,C1778	CKSRYB473K50
	C1773,C1774 (5600pF/50V)	DCE1009
	C1775,C1776 (0.47uF/50V)	DCH1192

RESISTORS

	R1795,R1796	RN1/10SE1300D
	R1751,R1752	RN1/16SE1001D
	R1815,R1816	RN1/16SE1002D
	R1753,R1754,R1787,R1788	RN1/16SE1003D
	R1779,R1780,R1783,R1784	RN1/16SE1502D
	R1820,R1821,R1824,R1826	RN1/16SE1502D
	R1761,R1762,R1789,R1790	RN1/16SE1800D
	R1759,R1760,R1765,R1766	RN1/16SE1801D
	R1793,R1794	RN1/16SE1801D
	R1777,R1778,R1781,R1782	RN1/16SE1802D
	R1817,R1818	RN1/16SE1802D
	R1763,R1764	RN1/16SE4702D
	R1757,R1758,R1771,R1772	RN1/16SE5101D
	R1791,R1792	RN1/16SE6202D
	R1797,R1798	RN1/16SE7502D

Mark	No.	Description	Part No.
	VR1752-VR1754 (10K-ohm -B)		DCS1065
	VR1751 (10K-ohm -B)		DCS1073
	VR1755 (10K-ohm -B)		DCV1014
	VR1756-VR1761 (22k-ohm)		VCP1133
	Other Resistors		RS1/16S###J

OTHERS

CN1754	7P FFC CONNECTOR	52045-0745
CN1753	11P FFC CONNECTOR	52045-1145
CN1751,CN1752	B TO B CONNECTOR 6P	DKN1278
0	CUE FADER BRACKET	DNF1690

E C1BF ASSY

SEMICONDUCTORS

	IC1255	NJM4580DD
	IC1251-IC1253	NJM5532MD
	Q1251,Q1252	2SC3326
	Q1257	DTA124EUA
	Q1253,Q1254,Q1256	DTC124EUA
	D1251-D1254,D1257,D1258	1SS355

SWITCHES AND RELAYS

	S1251	VSH1009
	RY1251,RY1252	VSR1008

CAPACITORS

	C1251-C1254,C1259-C1262	CCSRCH101J50
	C1297,C1298	CCSRCH220J50
	C1292,C1293	CEAT221M6R3
	C1269,C1270	CEAT470M35
	C1255-C1258,C1263-C1268	CEJQ100M50
	C1275,C1276	CEJQ100M50
	C1285,C1290	CFTLA103J50
	C1279-C1284,C1294,C1301	CKSRYB103K50
	C1271,C1272	CQMA222J50
	C1273,C1274	CQMA681J50

RESISTORS

	R1269,R1270	RN1/10SE4703D
	R1273-R1276	RN1/10SE7503D
	R1251,R1252,R1259,R1260	RN1/16SE1000D
	R1267,R1268,R1293-R1296	RN1/16SE1001D
	R1255-R1258,R1263-R1266	RN1/16SE1003D
	R1279,R1280,R1301-R1304	RN1/16SE1003D
	R1261,R1262,R1277,R1278	RN1/16SE1203D
	R1271,R1272	RN1/16SE1601D
	R1290	RN1/16SE2202D
	R1286,R1287	RN1/16SE3301D
	R1253,R1254,R1309,R1310	RN1/16SE3302D
	Other Resistors	RS1/16S###J

OTHERS

CN1255	FFC CONNECTOR 17P	52492-1720
JA1251	4P PIN JACK	AKB7048
CN1253,CN1254	B TO B CONNECTOR 6P	DKN1279
0	SHIELD CASE S	DNH2589
CN1252	B TO B CONNECTOR 10P	VKN1385
CN1251	B TO B CONNECTOR 18P	VKN1389

Mark	No.	Description	Part No.

F C2BF ASSY

SEMICONDUCTORS

	IC1355	NJM4580DD
	IC1351-IC1353	NJM5532MD
	Q1351,Q1352	2SC3326
	Q1357	DTA124EUA
	Q1353,Q1354,Q1356	DTC124EUA
	D1351-D1354,D1357,D1358	1SS355

SWITCHES AND RELAYS

	S1351	VSH1009
	RY1351,RY1352	VSR1008

CAPACITORS

	C1351-C1354,C1359-C1362	CCSRCH101J50
	C1397,C1398	CCSRCH220J50
	C1392,C1393	CEAT221M6R3
	C1369,C1370	CEAT470M35
	C1355-C1358,C1363-C1368	CEJQ100M50
	C1375,C1376	CEJQ100M50
	C1385,C1390	CFTLA103J50
	C1379-C1384,C1394,C1401	CKSRYB103K50
	C1371,C1372	CQMA222J50
	C1373,C1374	CQMA681J50

RESISTORS

	R1369,R1370	RN1/10SE4703D
	R1373-R1376	RN1/10SE7503D
	R1351,R1352,R1359,R1360	RN1/16SE1000D
	R1367,R1368,R1393-R1396	RN1/16SE1001D
	R1355-R1358,R1363-R1366	RN1/16SE1003D
	R1379,R1380,R1401-R1404	RN1/16SE1003D
	R1361,R1362,R1377,R1378	RN1/16SE1203D
	R1371,R1372	RN1/16SE1601D
	R1390	RN1/16SE2202D
	R1386,R1387	RN1/16SE3301D
	R1353,R1354,R1409,R1410	RN1/16SE3302D
	Other Resistors	RS1/16S###J

OTHERS

	CN1355 11P FFC CONNECTOR	52045-1145
	JA1351 4P PIN JACK	AKB7048
	CN1353,CN1354 B TO B CONNECTOR 6P	DKN1279
0	SHIELD CASE S	DNH2589
	CN1351 B TO B CONNECTOR 18P	VKN1389

G MICB ASSY

SEMICONDUCTORS

	IC1201,IC1203	NJM2068M
	IC1202	NJM4580MD
	D1201-D1204	1SS355
	D1205	NNCD6.2MF

COILS AND FILTERS

⚠	L1201-L1206 CHIP FERRITE BEAD	ATL7002

CAPACITORS

	C1201-C1204,C1244,C1245	CCSRCH101J50
	C1231,C1243	CCSRCH221J50
	C1207,C1208,C1227,C1234	CCSRCH270J50
	C1247	CEAT470M25
	C1205,C1206,C1209,C1210,C1228	CEJQ100M35
	C1230,C1233,C1237,C1241,C1242	CEJQ100M35
	C1248	CEJQ100M35
	C1226,C1239,C1240,C1249	CFTLA103J50
	C1211,C1212,C1229,C1235,C1236	CKSRYB103K50
	C1238	CKSRYB103K50

RESISTORS

	R1205,R1206	RN1/10SE4703D
	R1226	RN1/16SC22R0D
	R1203,R1204	RN1/16SE1000D
	R1219	RN1/16SE1002D
	R1201,R1202	RN1/16SE1003D
	R1209,R1210	RN1/16SE1802D
	R1207,R1208	RN1/16SE3302D
	R1213,R1230	RN1/16SE6202D
	R1211,R1212	RN1/16SE9102D
	VR1201 (10K-ohm -B)	DCS1071
	Other Resistors	RS1/16S###J

OTHERS

	JA1202 2P PIN JACK	AKB7046
	JA1201 CANNON CONNECTOR	DKB1058
	CN1202 B TO B CONNECTOR 6P	DKN1279
	CN1201 B TO B CONNECTOR 12P	VKN1386

H HPBO ASSY

SEMICONDUCTORS

	IC1454	NJM2068M
	IC1453	NJM4558MD
	IC1452	NJM4580MD
	IC1451	NJM5532MD
	IC1457	TC7S14F
	IC1455,IC1456	TC9215AF
	Q1453,Q1454	2SB1238X
	Q1455,Q1456	2SC3326
	Q1451,Q1452	2SD1859X
	Q1457,Q1458	DTC124EUA
	D1451-D1461	1SS355

SWITCHES AND RELAYS

	RY1451	VSR1008

CAPACITORS

	C1457,C1458	CCSRCH220J50
	C1463,C1464,C1467,C1468	CCSRCH820J50
	C1459,C1460	CEAL100M35
	C1451,C1452,C1455,C1456	CEAT100M50
	C1461,C1462,C1465,C1466	CEAT100M50
	C1497,C1498	CEAT100M50
	C1469,C1470	CEAT2R2M50
	C1471,C1472	CEAT470M25
	C1478-C1487,C1489,C1491,C1492	CKSRYB103K50
	C1503,C1504	CKSRYB473K50
	C1475,C1476 (220uF/35V)	DCH1194

RESISTORS

	R1487-R1490	RD1/2VM122J
	R1499,R1500	RD1/2VM221J
	R1451,R1452,R1457,R1458	RN1/16SE1001D
	R1473,R1474	RN1/16SE1002D

Mark	No.	Description	Part No.
	R1459-R1462		RN1/16SE2202D
	R1479,R1480		RN1/16SE5102D
	R1491-R1494		RS2LMF270J
	VR1451-VR1453 (10K-ohm -A)		DCS1064
	Other Resistors		RS1/16S###J
OTHERS			
	CN1453	7P FFC CONNECTOR	52045-0745
	CN1452	B TO B CONNECTOR 20P	VKN1390
	CN1451	B TO B CONNECTOR 22P	VKN1391

I FDVR ASSY

SEMICONDUCTORS			
	IC301		TC74VHC14FT
	Q301-Q305		2SC4081
	D307-D313		DA221
	D301		GP1A038RBK
	D302-D306		GP1S94
CAPACITORS			
	C905-C909		CCSRCH221J50
	C901-C904		CKSRYB104K25
RESISTORS			
	All Resistors		RS1/16S###J
OTHERS			
	CN301	9P FFC CONNECTOR	52044-0945

J SDRT ASSY

SEMICONDUCTORS			
	IC1901,IC1902		NJM4558MD
	IC1903		TC9215AF
	Q1901-Q1904		2SC3326
	Q1905		DTA124EK
	D1901-D1904		NNCD6.2MF
COILS AND FILTERS			
⚠	L1907-L1909	CHIP FERRITE BEAD	ATL7002
⚠	L1901-L1906	FERRITE BEAD	VTH1020
CAPACITORS			
	C1901-C1904,C1915-C1918		CCSRCH101J50
	C1907,C1908		CCSRCH270J50
	C1905,C1906,C1909,C1910		CEAT100M50
	C1913,C1914,C1931,C1932		CEAT100M50
	C1921,C1924-C1929		CKSRYB103K50
	C1933-C1935		CKSRYB104K25
RESISTORS			
	R1911,R1912,R1949,R1950		RN1/16SE4702D
	Other Resistors		RS1/16S###J
OTHERS			
	CN1901	15P FFC CONNECTOR	52044-1545
	JA1903,JA1904	MIC. JACK	DKN1248
	JA1901,JA1902	HEADPHONES JACK	RKB1014

K XLR ASSY

SEMICONDUCTORS			
	IC102,IC137		NJM4580MD
	IC108		NJM5532DD
	IC110,IC111		NJM5532L
	Q119-Q126		2SC3326
	D101-D108		1SS355
COILS AND FILTERS			
	L101-L104	FERRITE BEAD	VTH1020
CAPACITORS			
	C333,C334		CCSRCH151J50
	C141-C148,C335,C336		CCSRCH330J50
	C131,C132		CEAL100M50
	C149-C152		CEAT101M25
	C161-C164		CEHAT101M25
	C115-C118,C337,C338		CFTNA334J50
	C119,C120,C125,C126		CKSRYB103K50
	C133,C134,C137-C140		CKSRYB103K50
	C153-C156		CQMA103J50
RESISTORS			
	R196		RD1/2PM101J
	R193-R195		RD1/2VM101J
	R189-R192		RN1/16SC68R0D
	R163,R164		RN1/16SE1001D
	R123,R124,R165-R172		RN1/16SE1002D
	R447,R448		RN1/16SE1002D
	R387,R388		RN1/16SE1003D
	R125,R126		RN1/16SE1503D
	R129,R130		RN1/16SE2002D
	R185-R188		RN1/16SE2201D
	R173-R180,R451,R452		RN1/16SE2202D
	R435,R436,R441,R442		RN1/16SE2700D
	R429,R430		RN1/16SE2701D
	R431,R432		RN1/16SE4301D
	Other Resistors		RS1/16S###J
OTHERS			
	CN122	KR CONNECTOR	B8B-PH-K-S
	CN124	KR CONNECTOR	B9B-PH-K-S
	JA102,JA103	CANNON CONNECTOR	DKB1059
	0	SCREW PLATE	VNE1948

L LVMR ASSY

SEMICONDUCTORS			
	IC417,IC418		NJM072BM-E
	IC401-IC404		NJM4558MD
	IC413,IC416		TC4W53F
	IC407-IC412		TS339CDT
	Q401,Q402		2SA1577
	Q415-Q420		2SB1132
	Q404		2SC3326
	Q405		DTA124EUA
	Q403,Q408-Q414		DTC124EUA
	D401-D406,D409,D410		1SS355
	D413,D414,D439-D454		1SS355
	D473,D474,D481,D482		1SS355
	D437,D438,D458-D460		SLI-343URCW
	D429-D436,D455		SLI-343YCW

Mark No.	Description	Part No.
	D415-D428,D461-D464	TLGE68TG
	D467	UDZS10B
	D407,D408,D411,D412	UDZS12B
	SWITCHES AND RELAYS	
	S404,S405	DSG1077
	S401	RSG1032
	CAPACITORS	
	C403,C404,C407,C408	CCSRCH470J50
	C401,C402,C405,C406,C439	CEAT100M50
	C458	CEAT100M50
	C415-C418	CEAT2R2M50
	C433,C434	CEJQ100M35
	C419,C420,C422-C426	CKSRYB103K50
	C428-C432,C435-C438,C440	CKSRYB103K50
	C447,C449,C451,C453,C455	CKSRYB103K50
	C457,C461-C464	CKSRYB103K50
	C409,C410	CKSRYB473K50
	RESISTORS	
	R461,R462	RS1/10S27R0F
	R463,R464	RS1/16S1000F
	R407,R408,R417,R418	RS1/16S1302F
	R473,R474	RS1/16S2000F
	R475,R476	RS1/16S2400F
	R481,R482	RS1/16S2401F
	R465,R466	RS1/16S3000F
	R467,R468	RS1/16S3300F
	R483,R484	RS1/16S3301F
	R471,R472	RS1/16S4300F
	R469,R470	RS1/16S4700F
	R485,R486	RS1/16S5100F
	R477,R478	RS1/16S7500F
	R403,R404,R413,R414	RS1/16S7501F
	R479,R480	RS1/16S9100F
	Other Resistors	RS1/16S###J
	OTHERS	
	CN402 19P FFC CONNECTOR	52044-1945
	CN405 FFC CONNECTOR 9P	52492-0920
	CN401 FFC CONNECTOR 23P	52492-2320
	CN403,CN404 B TO B CONNECTOR 3P	DKN1334
	J406,J407 CONNECTOR ASSY	PG03KA-E07

M C1TR ASSY

Mark No.	Description	Part No.
	SWITCHES AND RELAYS	
	S591	DSK1031
	OTHERS	
	CN591 KR CONNECTOR 3P	B3B-PH-K-S

N C2TR ASSY

Mark No.	Description	Part No.
	SWITCHES AND RELAYS	
	S592	DSK1031
	OTHERS	
	CN592 KR CONNECTOR 3P	B3B-PH-K-S

O FVA1 ASSY

Mark No.	Description	Part No.
	RESISTORS	
	VR593 (10k-ohm -B)	DCV1016
	OTHERS	
	CN593 B TO B CONNECTOR 3P	VKN1355

P FVA2 ASSY

Mark No.	Description	Part No.
	RESISTORS	
	VR594 (10k-ohm -B)	DCV1016
	OTHERS	
	CN594 B TO B CONNECTOR 3P	VKN1355

Q CFVR ASSY

Mark No.	Description	Part No.
	RESISTORS	
	VR552,VR554 (10k-ohm)	DCS1076
	VR551,VR555 (10k-ohm)	DCS1077
	VR553 (10k-ohm)	DCS1079
	Other Resistors	RS1/16S###J
	OTHERS	
	CN551 17P FFC CONNECTOR	52044-1745
	CN553 3P FFC CONNECTOR	52045-0345
	CN552 FFC CONNCTOR 6P	52492-0620

R RVSW ASSY

Mark No.	Description	Part No.
	SWITCHES AND RELAYS	
	S571-S573	DSH1036
	OTHERS	
	CN571 FFC CONNECTOR 6P	52492-0620

S FSSW ASSY

Mark No.	Description	Part No.
	SEMICONDUCTORS	
	D581,D582	NNCD6.2MF
	COILS AND FILTERS	
⚠	L576-L578 FERRITE BEAD	VTH1020
	SWITCHES AND RELAYS	
	S581,S582	DSH1052
	CAPACITORS	
	C581	CQMA102J50
	OTHERS	
	CN581 3P FFC CONNECTOR	52045-0345
	JA581 HEADPHONES JACK	DKN1281
	CN582 KR CONNECTOR	S6B-PH-K-S

6. ADJUSTMENT

6.1 ADJUSTMENT REQUIRED WHEN THE SET IS REPAIRED OR REPLACED

CONT Assy

• When repaired

No adjustment required.

• When repaired

• Adjusting Point

When repair and System CPU are exchanged for a VCA control circuit

- When fixing and part exchanging a Ch1 VCA control circuit
- When fixing and part exchanging a Ch2 VCA control circuit

→ CH1 Gain Adjustment , CH1 Offset Adjustment
→ CH2 Gain Adjustment , CH2 Offset Adjustment

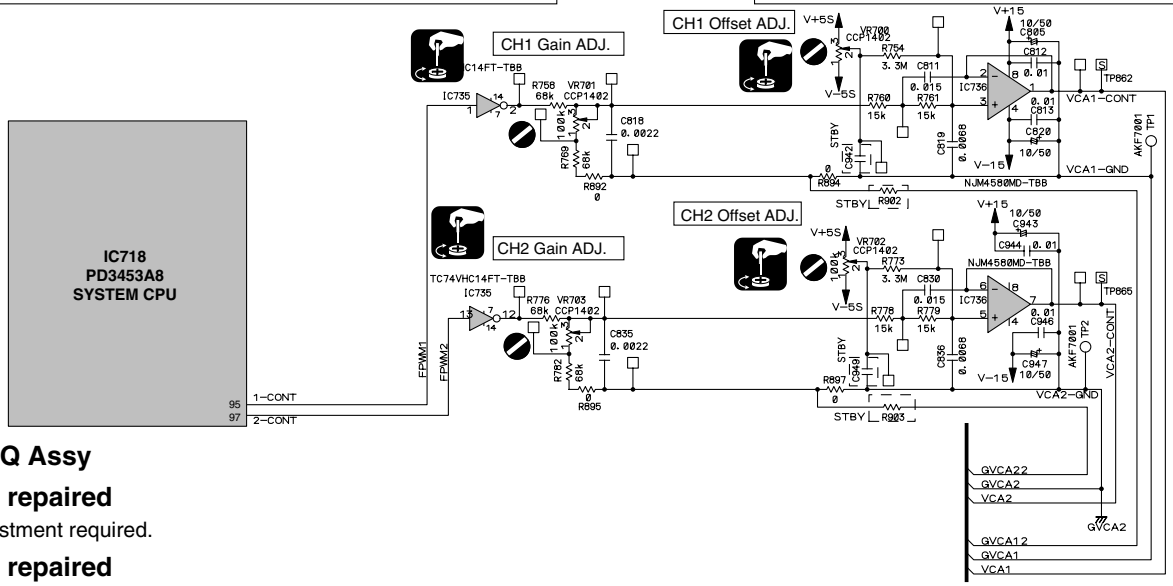

C1EQ Assy

• When repaired

No adjustment required.

• When repaired

• Adjusting Point

When repair and parts are exchanged for EQ circuit

- When fixing and part exchanging a Ch1 Lch (Rch) EQ (Hi) circuit.
- When fixing and part exchanging a Ch1 Lch (Rch) EQ (Mid) circuit
- When fixing and part exchanging a Ch1 Lch (Rch) EQ (Low) circuit

→ CH1 Lch (Rch) EQ Hi Adjustment
→ CH1 Lch (Rch) EQ Mid Adjustment
→ CH1 Lch (Rch) EQ Low Adjustment

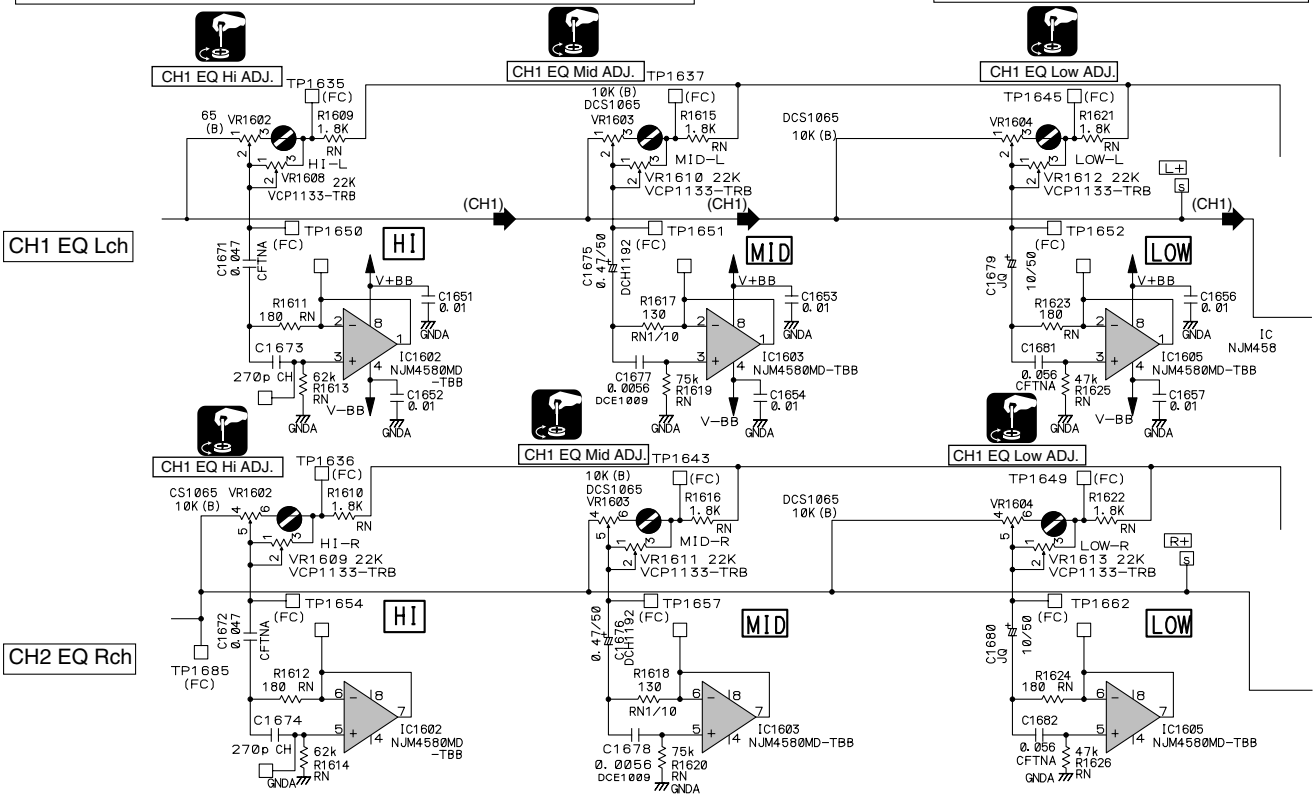

■ C2EQ Assy

• When repaired

No adjustment required.

• When repaired

When repair and parts are exchanged for EQ circuit

- When fixing and part exchanging a Ch2 Lch (Rch) EQ (Hi) circuit.
- When fixing and part exchanging a Ch2 Lch (Rch) EQ (Mid) circuit
- When fixing and part exchanging a Ch2 Lch (Rch) EQ (Low) circuit

• Adjusting Point

- CH2 Lch (Rch) EQ Hi Adjustment
- CH2 Lch (Rch) EQ Mid Adjustment
- CH2 Lch (Rch) EQ Low Adjustment

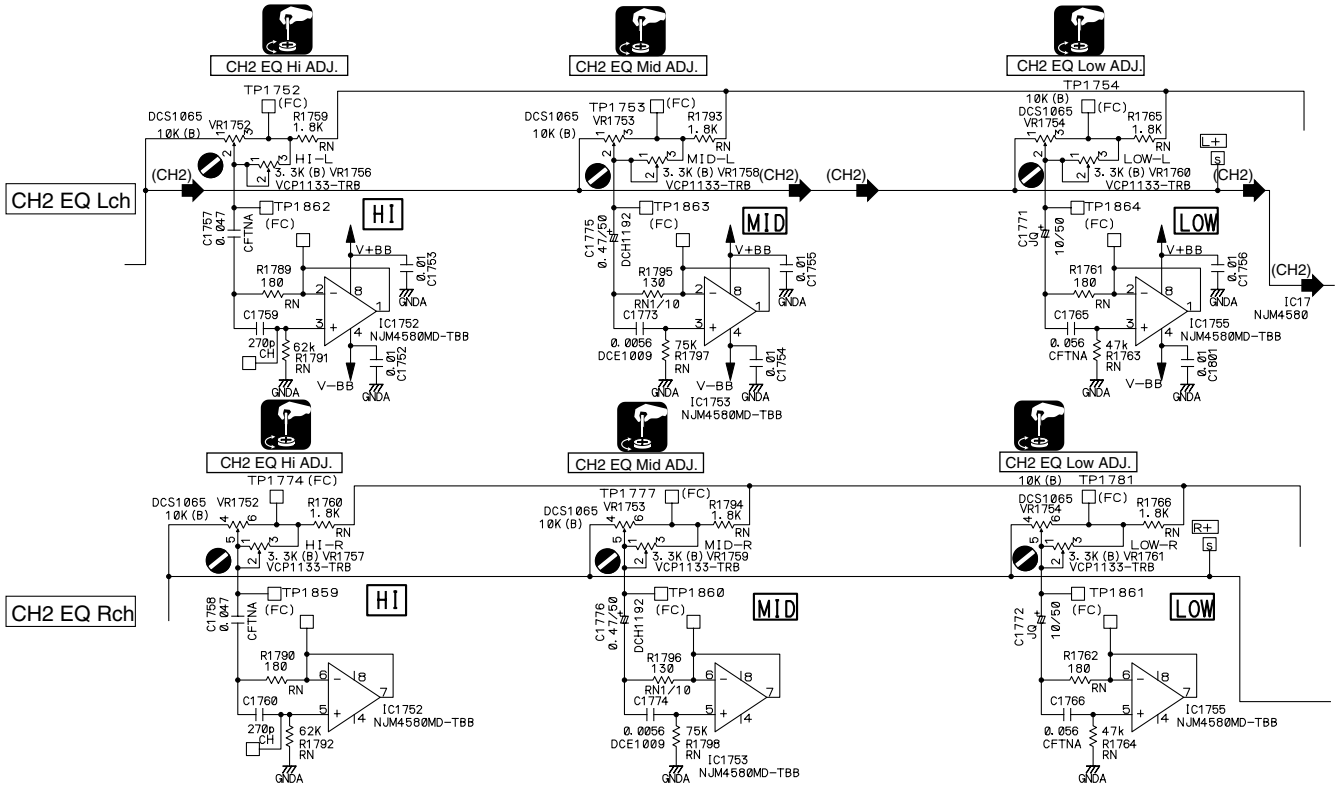

6.2 CH1 OFFSET ADJUSTMENT

■ Adjustment condition

• Power -ON state

■ Measuring instrument

• Digital multi-meter which can be measured to 0.1mV unit

■ Adjustment value / Adjustment points

• 0V ± 0.01V (VR700)

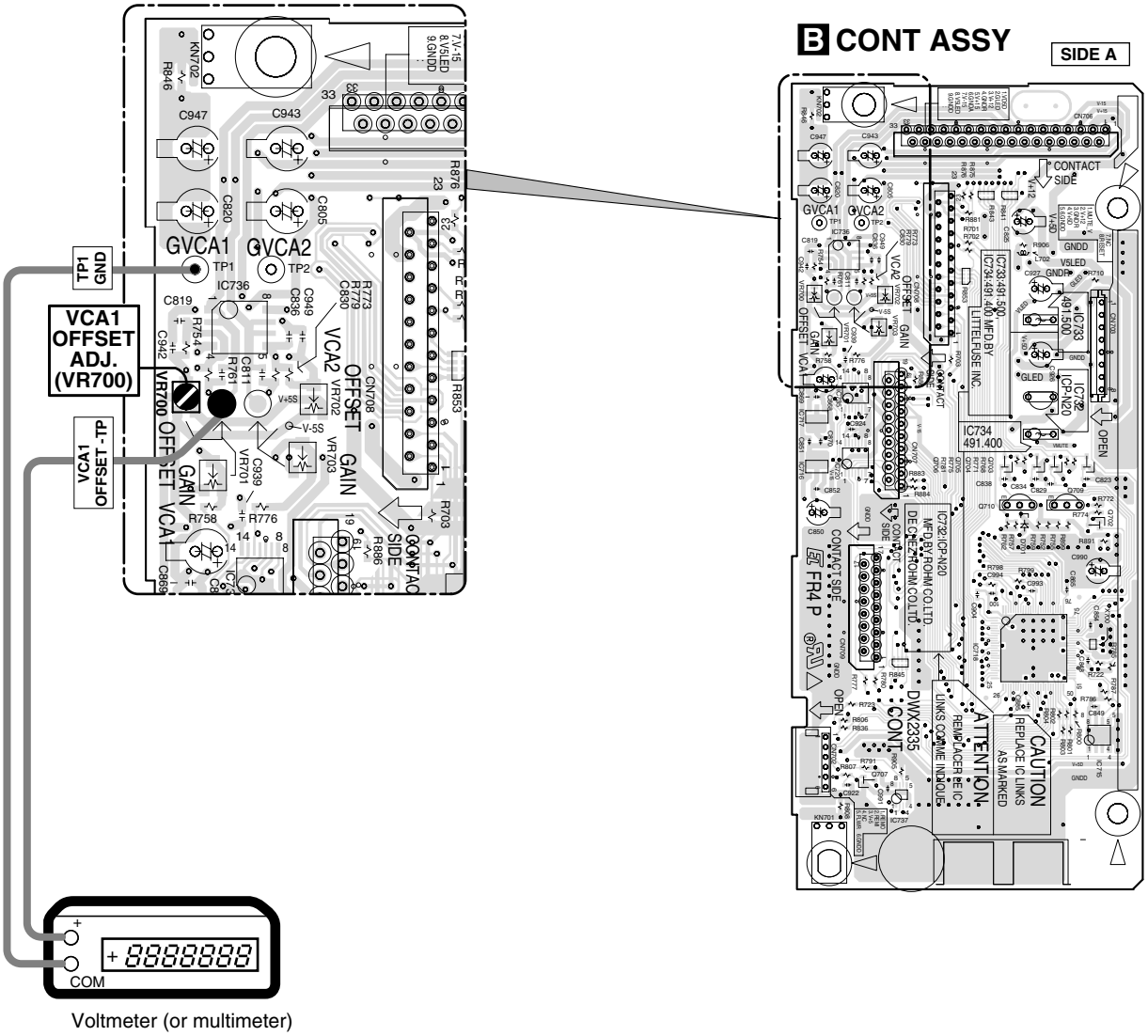

Adjustment points / Connection diagram

6.3 CH1GAIN ADJUSTMENT

■ Adjustment condition

• Power -ON state

■ Measuring instrument

• Digital multi-meter which can be measured to 0.1mV unit

■ Adjustment value / Adjustment points

• 3V ± 0.01V (VR701)

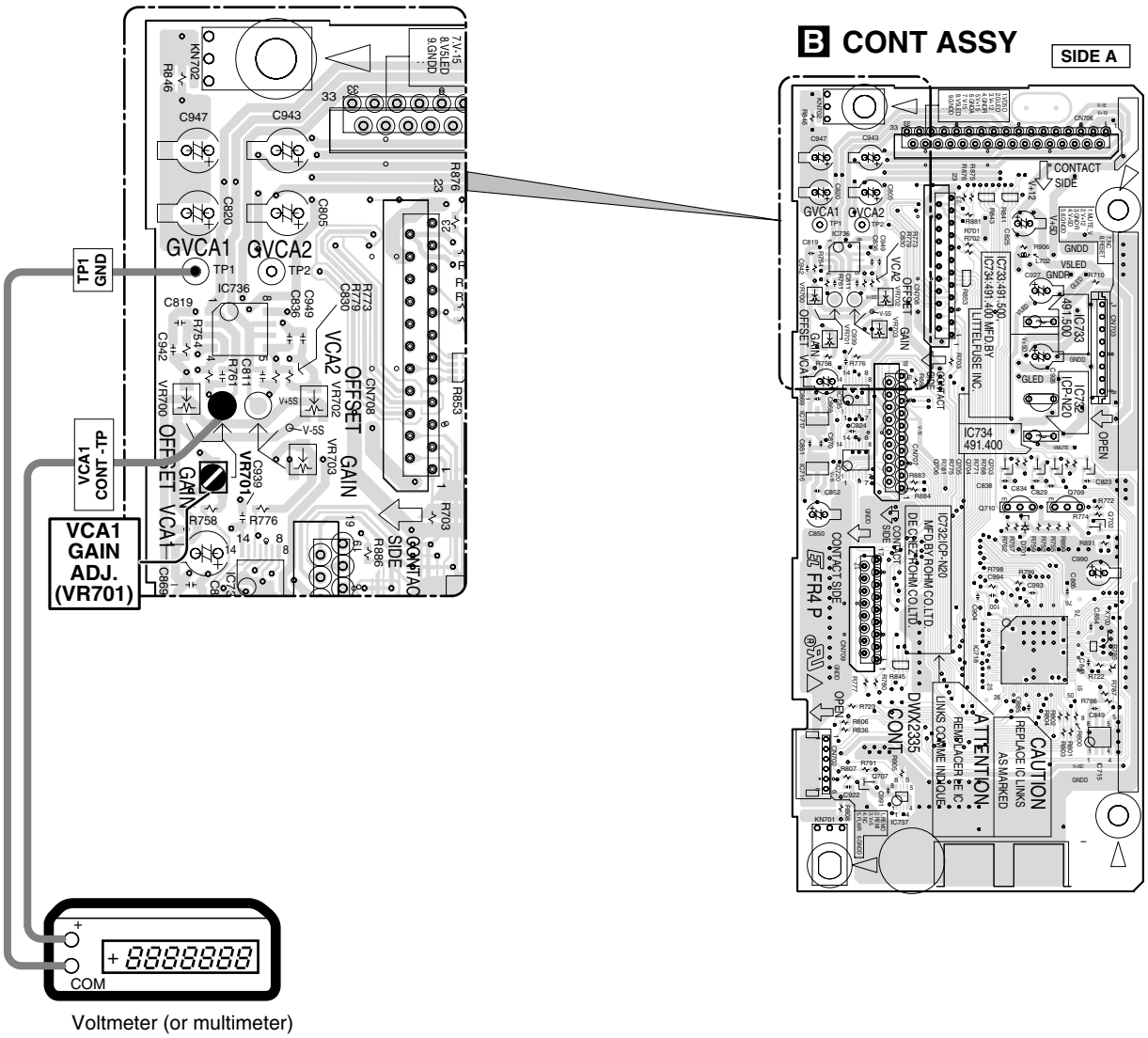

Voltmeter (or multimeter)

Adjustment points / Connection diagram

6.4 CH2 OFFSET ADJUSTMENT

■ Adjustment condition

• Power -ON state

■ Measuring instrument

• Digital multi-meter which can be measured to 0.1mV unit

■ Adjustment value / Adjustment points

• 0V ± 0.01V (VR702)

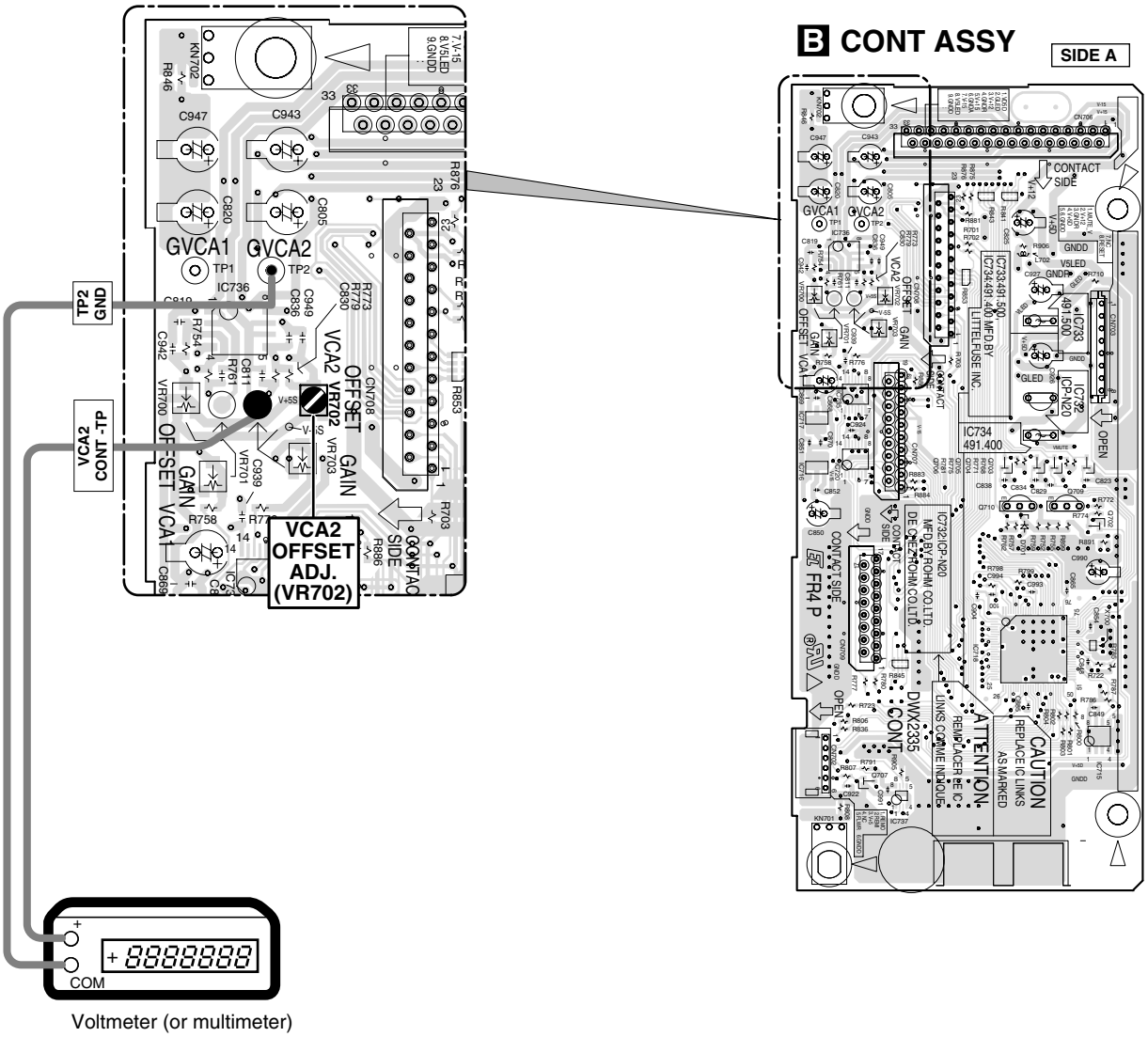

Adjustment points / Connection diagram

6.5 CH2 GAIN ADJUSTMENT

■ Adjustment condition

• Power -ON state

■ Measuring instrument

• Digital multi-meter which can be measured to 0.1mV unit

■ Adjustment value / Adjustment points

• 3V ± 0.01V (VR703)

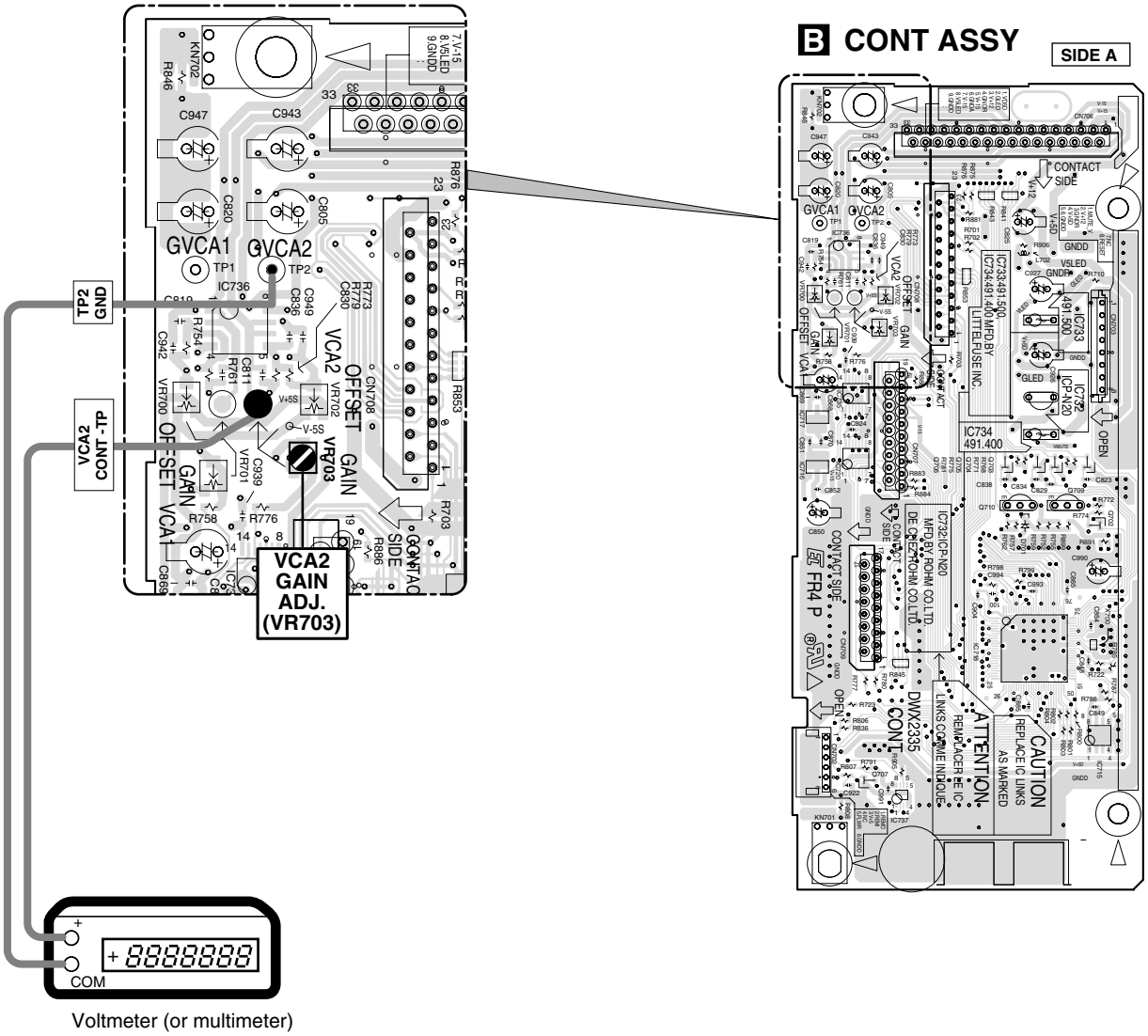

Adjustment points / Connection diagram

6.6 CH1 EQ Low ADJUSTMENT

■ Adjustment condition

- CH1 EQ ADJ VR [VR1604 (LOW): Ⓑ, VR1603 (MID): Ⓒ, VR1602 (HI) : Ⓓ] : Center click
- CH1 INPUT SELECTOR: CD1 Ⓙ, CH1 FADER: MAX Ⓚ, CROSS FADER: 1 side Ⓛ, MASTER LEVEL: MAX Ⓜ
- TRANSFORM Ⓝ, FADER REVERSE SW Ⓞ: All are turned OFF

■ Measuring instrument

- Low frequency transmitter
- Analog voltage meter which can be measured to 0.2dB unit

■ Adjustment method

Set the output of transmitter to 70Hz 2Vrms.

• Lch EQ Lo ADJ.

1. Turn S1601 (CH1 EQ ON/OFF: Ⓐ) to OFF.
2. Adjust VR1601 (CH1 TRIM: Ⓔ) so that the L ch output becomes **0dBv+0.2/-0dB**.
3. Turn S1601 (CH1 EQ ON/OFF: Ⓐ) to ON.
4. Adjust VR1612 (C1EQ Assy (CH1 Low Lch) : [A]) so that the L ch output becomes **0dBv+0.2/-0dB**.

• Rch EQ Lo ADJ.

1. Turn S1601 (CH1 EQ ON/OFF: Ⓐ) to OFF.
2. Adjust VR1601 (CH1 TRIM: Ⓔ) so that the R ch output becomes **0dBv+0.2/-0dB**.
3. Turn S1601 (CH1 EQ ON/OFF: Ⓐ) to ON.
4. Adjust VR1613 (C1EQ Assy (CH1 Low Rch) : [B]) so that the R ch output becomes **0dBv+0.2/-0dB**.

■ Adjustment value / Adjustment points

- Lch EQ Low ADJ. : 0dBv + 0.2/-0dBv (VR1612)
- Rch EQ Low ADJ. : 0dBv + 0.2/-0dBv (VR1613)

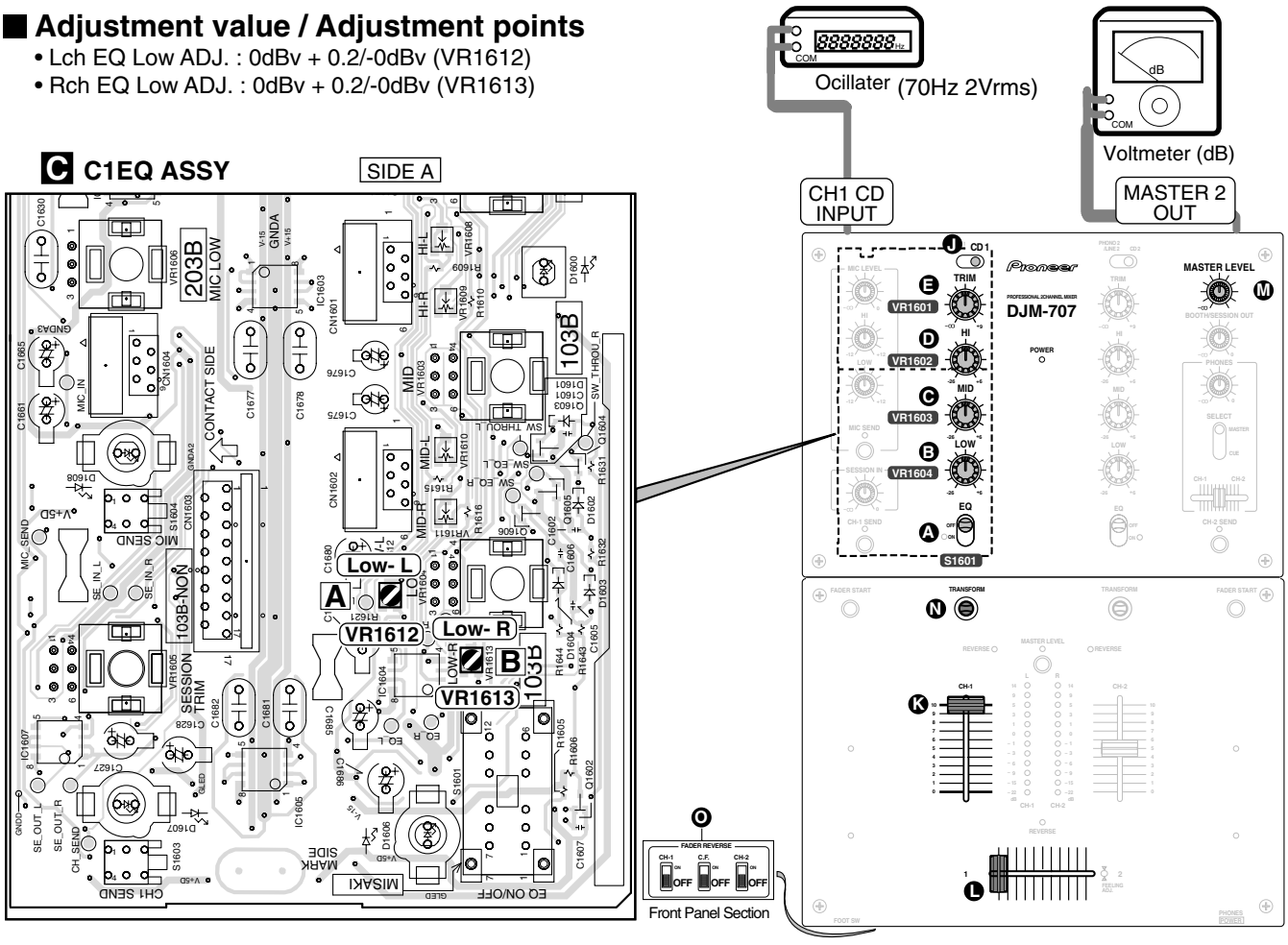

Adjustment points / Connection diagram

6.7 CH1 EQ Mid ADJUSTMENT

■ Adjustment condition

- CH1 EQ ADJ VR [VR1604 (LOW): (B), VR1603 (MID): (C), VR1602 (HI) : (D)] : Center click
- CH1 INPUT SELECTOR: CD1 (J), CH1 FADER: MAX (K), CROSS FADER: 1 side (L), MASTER LEVEL: MAX (M)
- TRANSFORM (N), FADER REVERSE SW (O): All are turned OFF

■ Measuring instrument

- Low frequency transmitter
- Analog voltage meter which can be measured to 0.2dB unit

■ Adjustment method

Set the output of transmitter to 1kHz 2Vrms.

• Lch EQ Mid ADJ.

1. Turn S1601 (CH1 EQ ON/OFF: (A)) to OFF.
2. Adjust VR1601 (CH1 TRIM: (E)) so that the L ch output becomes **0dBv+0.2/-0dB**.
3. Turn S1601 (CH1 EQ ON/OFF: (A)) to ON.
4. Adjust VR1610 (C1EQ Assy (CH1 Mid Lch) : [C]) so that the L ch output becomes **0dBv+0.2/-0dB**.

• Rch EQ Mid ADJ.

1. Turn S1601 (CH1 EQ ON/OFF: (A)) to OFF.
2. Adjust VR1601 (CH1 TRIM: (E)) so that the R ch output becomes **0dBv+0.2/-0dB**.
3. Turn S1601 (CH1 EQ ON/OFF: (A)) to ON.
4. Adjust VR1611 (C1EQ Assy (CH1 Mid Rch) : [D]) so that the R ch output becomes **0dBv+0.2/-0dB**.

■ Adjustment value / Adjustment points

- Lch EQ Mid ADJ. : 0dBv + 0.2/-0dBv (VR1610)
- Rch EQ Mid ADJ. : 0dBv + 0.2/-0dBv (VR1611)

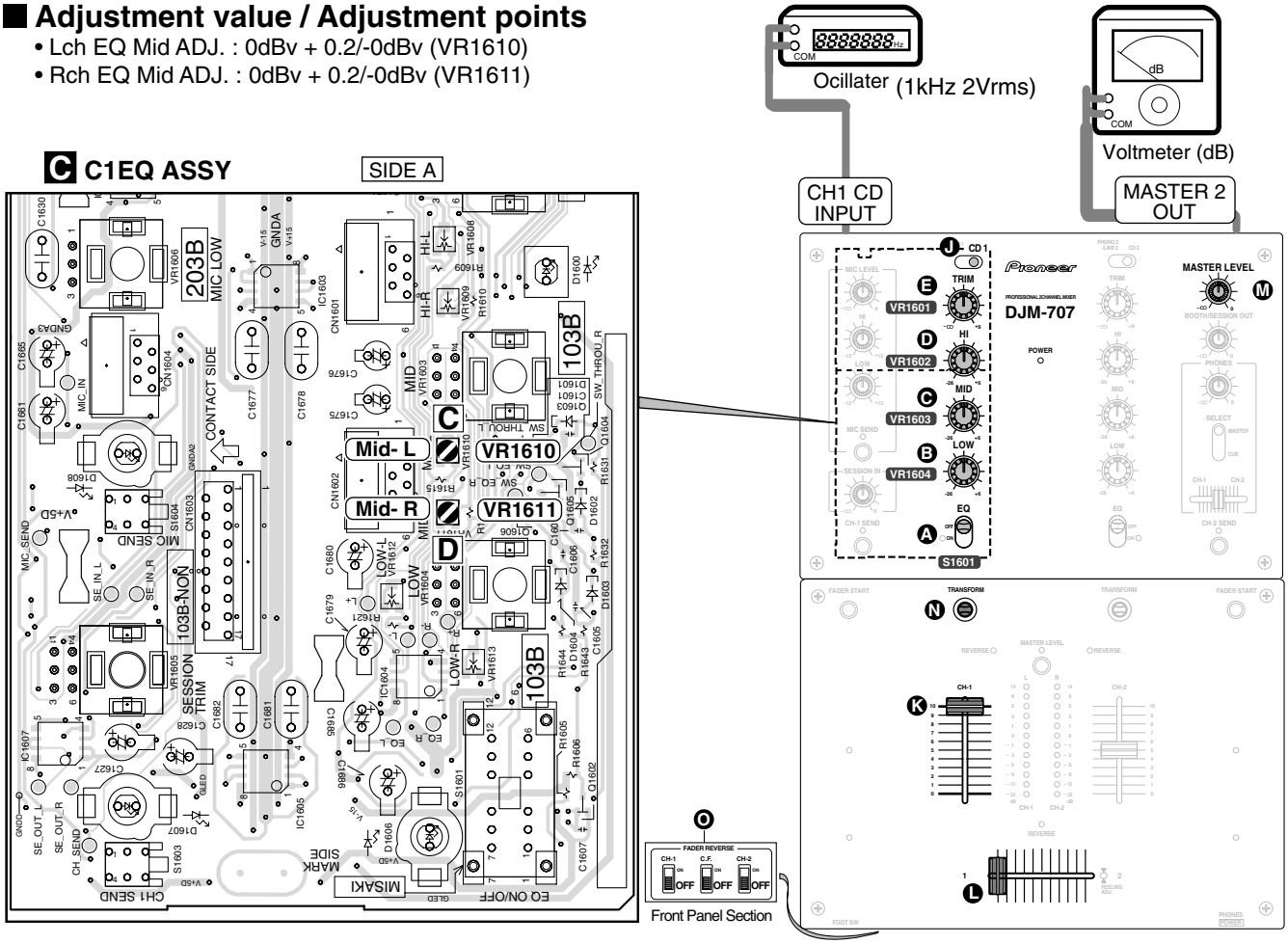

Adjustment points / Connection diagram

6.8 CH1 EQ Hi ADJUSTMENT

■ Adjustment condition

- CH1 EQ ADJ VR [VR1604 (LOW): (B), VR1603 (MID): (C), VR1602 (HI) : (D)] : Center click
- CH1 INPUT SELECTOR: CD1 (J), CH1 FADER: MAX (K), CROSS FADER: 1 side (L), MASTER LEVEL: MAX (M)
- TRANSFORM (N), FADER REVERSE SW (O): All are turned OFF

■ Measuring instrument

- Low frequency transmitter
- Analog voltage meter which can be measured to 0.2dB unit

■ Adjustment method

Set the output of transmitter to 13kHz 2Vrms.

• Lch EQ Hi ADJ.

1. Turn S1601 (CH1 EQ ON/OFF: (A)) to OFF.
2. Adjust VR1601 (CH1 TRIM: (E)) so that the L ch output becomes **0dBv+0.2/-0dB**.
3. Turn S1601 (CH1 EQ ON/OFF: (A)) to ON.
4. Adjust VR1608 (C1EQ Assy (CH1 Hi Lch) : [E]) so that the L ch output becomes **0dBv+0.2/-0dB**.

• Rch EQ Hi ADJ.

1. Turn S1601 (CH1 EQ ON/OFF: (A)) to OFF.
2. Adjust VR1601 (CH1 TRIM: (E)) so that the R ch output becomes **0dBv+0.2/-0dB**.
3. Turn S1601 (CH1 EQ ON/OFF: (A)) to ON.
4. Adjust VR1609 (C1EQ Assy (CH1 Hi Rch) : [F]) so that the R ch output becomes **0dBv+0.2/-0dB**.

■ Adjustment value / Adjustment points

- Lch EQ Hi ADJ. : 0dBv + 0.2/-0dBv (VR1608)
- Rch EQ Hi ADJ. : 0dBv + 0.2/-0dBv (VR1609)

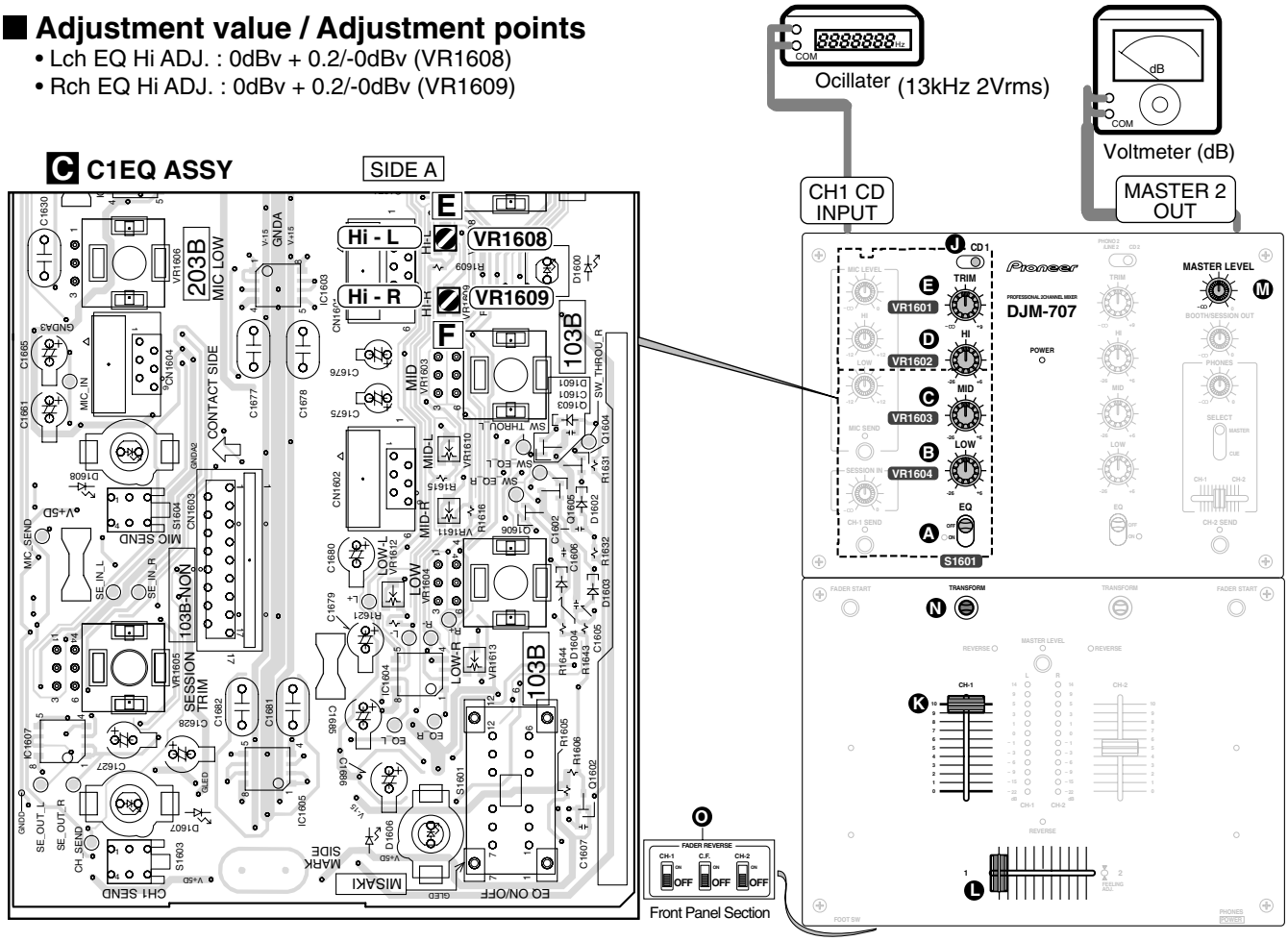

Adjustment points / Connection diagram

6.9 CH2 EQ Low ADJUSTMENT

■ Adjustment condition

- CH2 EQ ADJ VR [VR1754 (LOW): G, VR1753 (MID): H, VR1752 (HI) : I] : Center click
- CH2 INPUT SELECTOR: CD2 J, CH2 FADER: MAX K, CROSS FADER: 2 side L, MASTER LEVEL: MAX M
- TRANSFORM N, FADER REVERSE SW O: All are turned OFF

■ Measuring instrument

- Low frequency transmitter
- Analog voltage meter which can be measured to 0.2dB unit

■ Adjustment method

Set the output of transmitter to 70Hz 2Vrms.

• Lch EQ Low ADJ.

1. Turn S1754 (CH2 EQ ON/OFF: F) to OFF.
2. Adjust VR1751 (CH2 TRIM: E) so that the L ch output becomes **0dBv+0.2/-0dB**.
3. Turn S1754 (CH2 EQ ON/OFF: F) to ON.
4. Adjust VR1760 (C2EQ Assy (CH2 Low Lch) : G) so that the L ch output becomes **0dBv+0.2/-0dB**.

• Rch EQ Low ADJ.

1. Turn S1754 (CH2 EQ ON/OFF: F) to OFF.
2. Adjust VR1751 (CH2 TRIM: E) so that the R ch output becomes **0dBv+0.2/-0dB**.
3. Turn S1754 (CH2 EQ ON/OFF: F) to ON.
4. Adjust VR1761 (C2EQ Assy (CH2 Low Rch) : H) so that the R ch output becomes **0dBv+0.2/-0dB**.

■ Adjustment value / Adjustment points

- Lch EQ Low ADJ. : 0dBv + 0.2/-0dBv (VR1760)
- Rch EQ Low ADJ. : 0dBv + 0.2/-0dBv (VR1761)

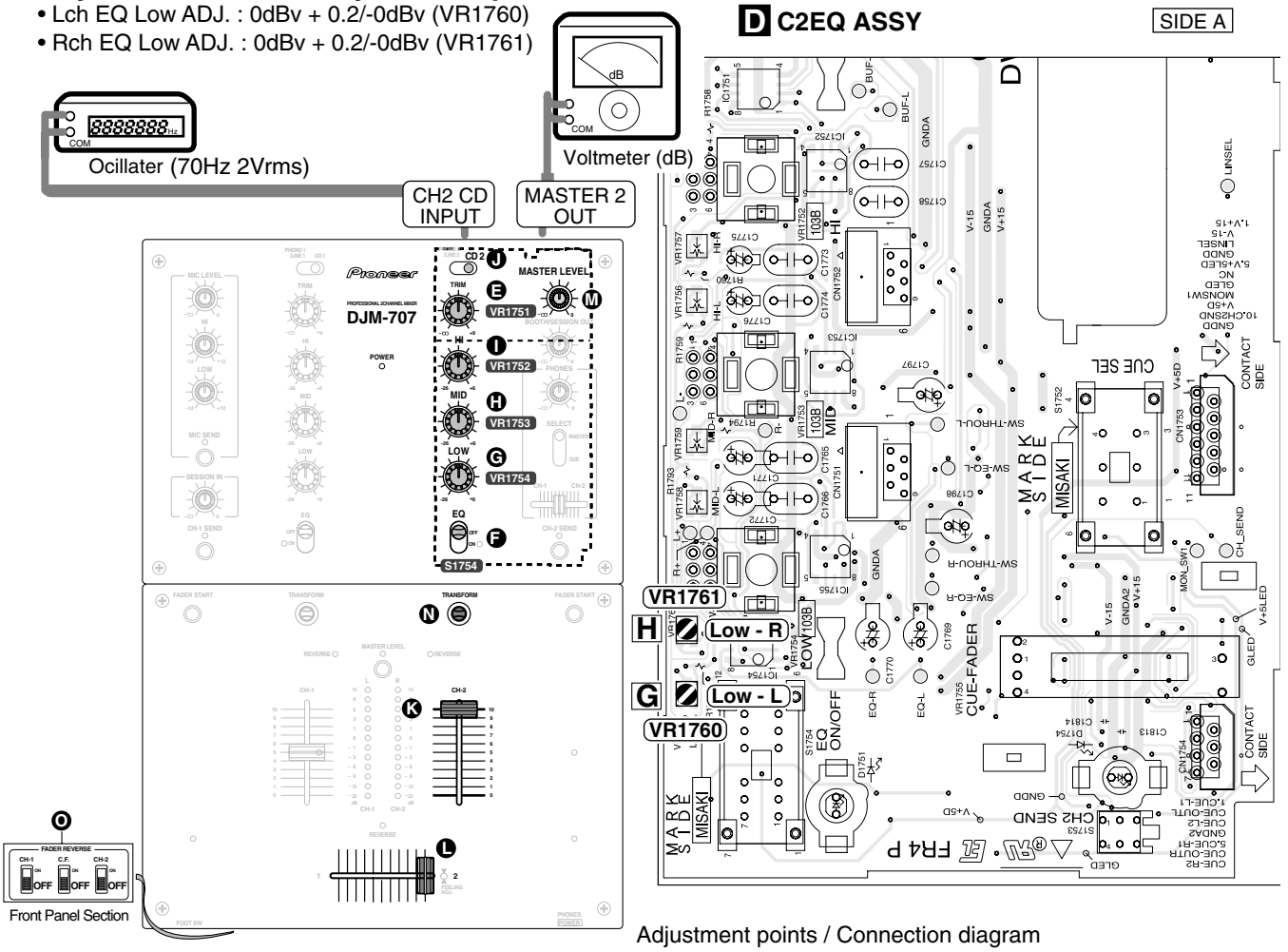

Adjustment points / Connection diagram

6.10 CH2 EQ Mid ADJUSTMENT

■ Adjustment condition

- CH2 EQ ADJ VR [VR1754 (LOW): (G), VR1753 (MID): (H), VR1752 (HI) : (I)] : Center click
- CH2 INPUT SELECTOR: CD1 (J), CH2 FADER: MAX (K), CROSS FADER: 2 side (L), MASTER LEVEL: MAX (M)
- TRANSFORM (N), FADER REVERSE SW (O): All are turned OFF

■ Measuring instrument

- Low frequency transmitter
- Analog voltage meter which can be measured to 0.2dB unit

■ Adjustment method

Set the output of transmitter to 1kHz 2Vrms.

• Lch EQ Mid ADJ.

1. Turn S1754 (CH2 EQ ON/OFF: (F)) to OFF.
2. Adjust VR1751 (CH2 TRIM: (E)) so that the L ch output becomes **0dBv+0.2/-0dB**.
3. Turn S1754 (CH2 EQ ON/OFF: (F)) to ON.
4. Adjust VR1758 (C2EQ Assy (CH2 Mid Lch) : [I]) so that the L ch output becomes **0dBv+0.2/-0dB**.

• Rch EQ Mid ADJ.

1. Turn S1754 (CH2 EQ ON/OFF: (F)) to OFF.
2. Adjust VR1751 (CH2 TRIM: (E)) so that the R ch output becomes **0dBv+0.2/-0dB**.
3. Turn S1754 (CH2 EQ ON/OFF: (F)) to ON.
4. Adjust VR1759 (C2EQ Assy (CH2 Mid Rch) : [J]) so that the R ch output becomes **0dBv+0.2/-0dB**.

■ Adjustment value / Adjustment points

- Lch EQ Mid ADJ. : 0dBv + 0.2/-0dBv (VR1758)
- Rch EQ Mid ADJ. : 0dBv + 0.2/-0dBv (VR1759)

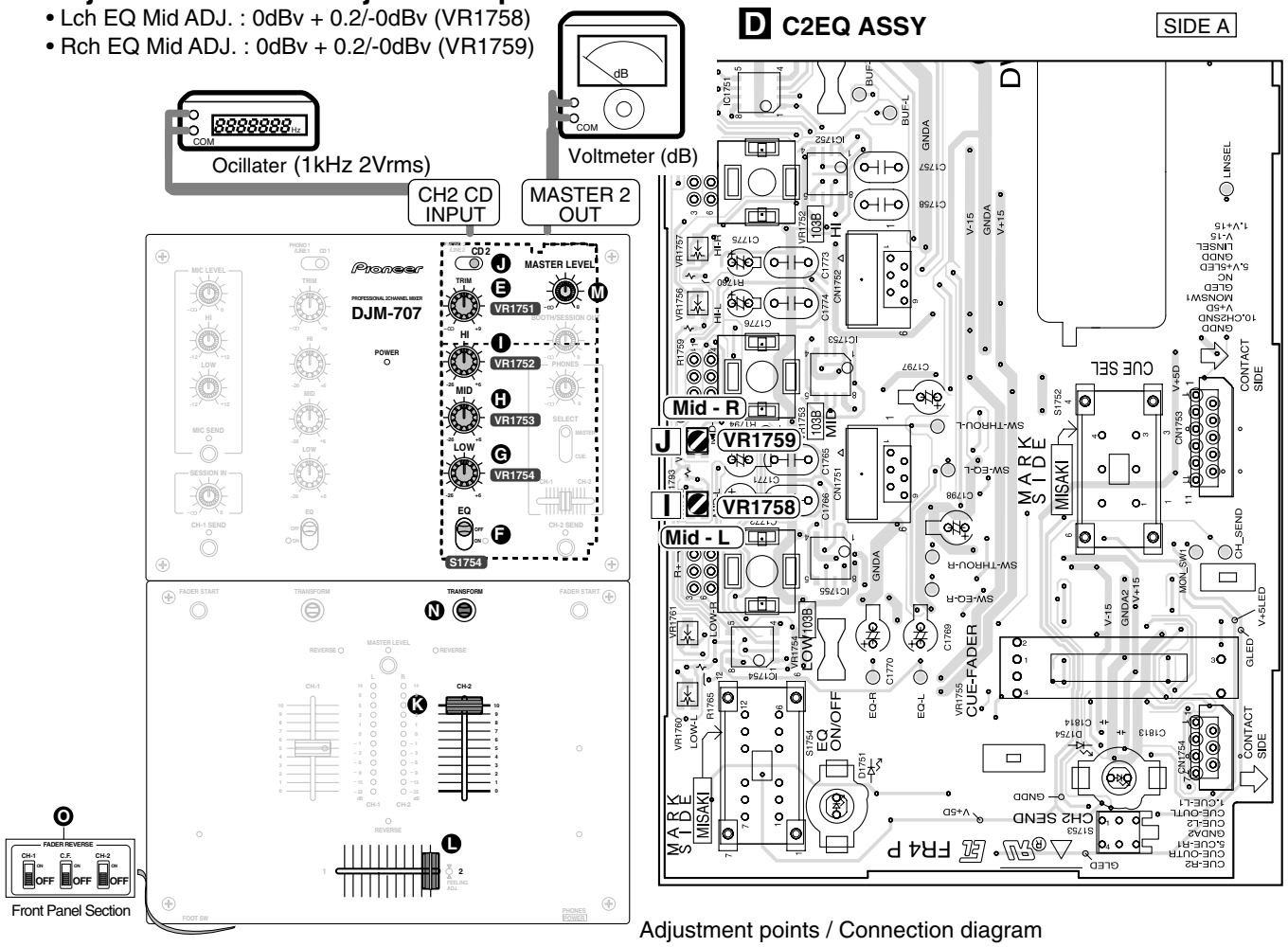

Adjustment points / Connection diagram

6.11 CH2 EQ Hi ADJUSTMENT

■ Adjustment condition

- CH2 EQ ADJ VR [VR1754 (LOW): (G), VR1753 (MID): (H), VR1752 (HI) : (I)] : Center click
- CH1 INPUT SELECTOR: CD2 (J), CH2 FADER: MAX (K), CROSS FADER: 2 side (L), MASTER LEVEL: MAX (M)
- TRANSFORM (N), FADER REVERSE SW (O): All are turned OFF

■ Measuring instrument

- Low frequency transmitter
- Analog voltage meter which can be measured to 0.2dB unit

■ Adjustment method

Set the output of transmitter to 13kHz 2Vrms.

• Lch EQ Hi ADJ.

1. Turn S1754 (CH2 EQ ON/OFF: (F)) to OFF.
2. Adjust VR1751 (CH2 TRIM: (E)) so that the L ch output becomes **0dBv+0.2/-0dB**.
3. Turn S1754 (CH2 EQ ON/OFF: (F)) to ON.
4. Adjust VR1756 (C2EQ Assy (CH2 Hi Lch) : [K]) so that the L ch output becomes **0dBv+0.2/-0dB**.

• Rch EQ Hi ADJ.

1. Turn S1754 (CH2 EQ ON/OFF: (F)) to OFF.
2. Adjust VR1751 (CH2 TRIM: (E)) so that the R ch output becomes **0dBv+0.2/-0dB**.
3. Turn S1754 (CH2 EQ ON/OFF: (F)) to ON.
4. Adjust VR1757 (C2EQ Assy (CH2 Hi Rch) : [L]) so that the R ch output becomes **0dBv+0.2/-0dB**.

■ Adjustment value / Adjustment points

- Lch EQ Hi ADJ. : 0dBv + 0.2/-0dBv (VR1756)
- Rch EQ Hi ADJ. : 0dBv + 0.2/-0dBv (VR1757)

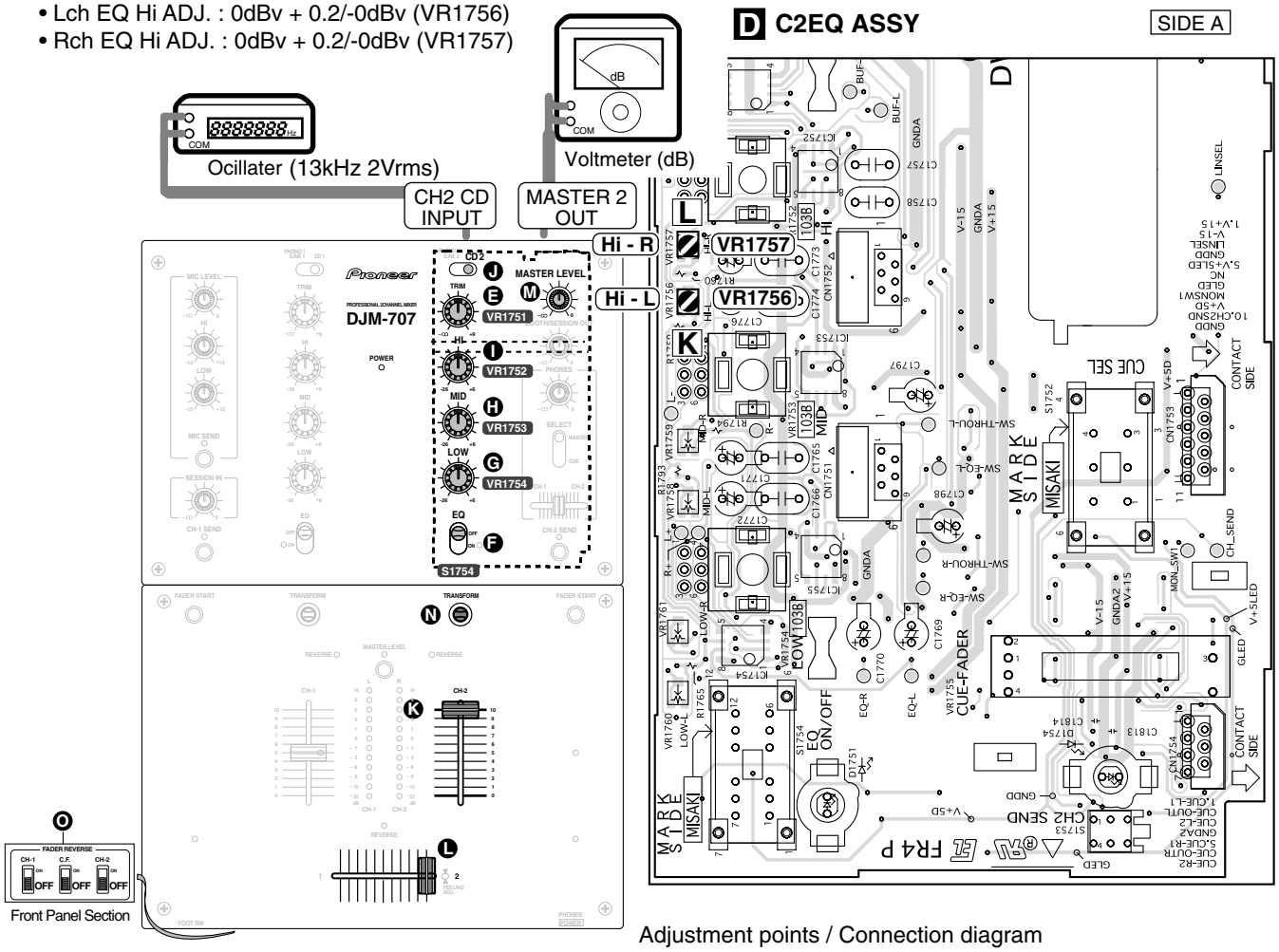

7. GENERAL INFORMATIN

7.1 DIAGNOSIS

7.1.1 SERVICE MODE

1. Outline of Service Mode

With this unit, the whole system is controlled by a single system control microcomputer. Variable Resistor Check mode and Setup mode for the system control microcomputer are provided.

① Variable Resistor Check mode
Mode for checking each variable resistor

② Setup mode
Mode for initial setting for the noncontact fader.
This mode also allows you to check the version of the system control microcomputer.

2. Variable Resistor (VR) Check Mode

To enter VR Check mode 1, ground Pin 28 of the system control microcomputer then turn on the power.
To enter VR Check mode 2, ground Pin 29 of the system control microcomputer then turn on the power.

VR Check Mode : ON

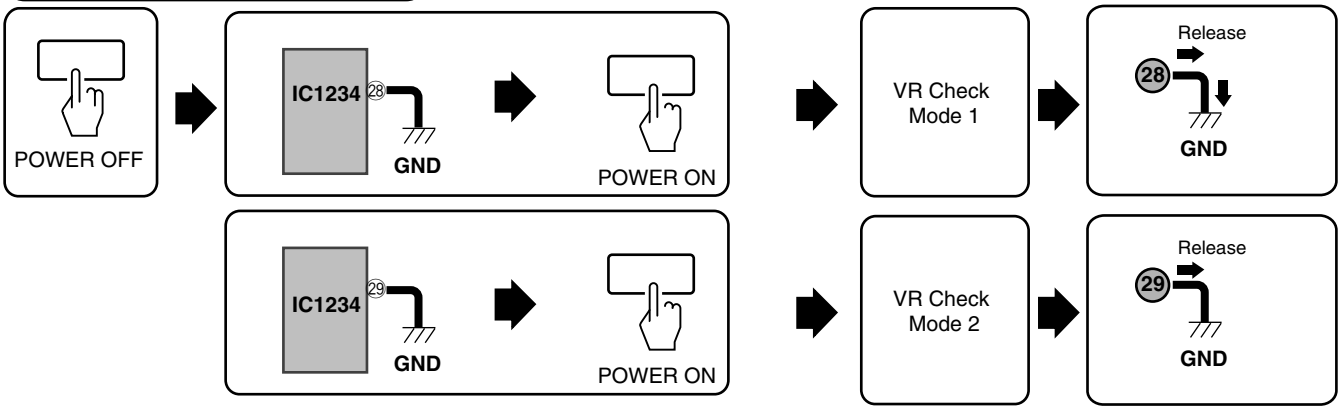

VR Check Mode : CANCEL



In this mode, you can check if the input to each VR is normal by observing which indication goes on or off depending on the position of a VR, as shown in the table below:

Mode	VR	Indications
1	CH1 FADER VR	VR<11 → CH-1 FADER START : Lights C.F.1 FADER START : Goes off
		12<VR<21 → CH-1 FADER START : Lights C.F.1 FADER START : Lights
		22<VR → CH-1 FADER START : Goes off C.F.1 FADER START : Lights
	CH2 FADER VR	VR<11 → CH-2 FADER START : Lights C.F.2 FADER START : Goes off
		12<VR<21 → CH-2 FADER START : Lights C.F.2 FADER START : Lights
		22<VR → CH-2 FADER START : Goes off C.F.2 FADER START : Lights
2	CROSS FADER 1 VR	VR<11 → CH-1 FADER START : Lights C.F.1 FADER START : Goes off
		12<VR<21 → CH-1 FADER START : Lights C.F.1 FADER START : Lights
		22<VR → CH-1 FADER START : Goes off C.F.1 FADER START : Lights
	CROSS FADER 2 VR	VR<11 → CH-2 FADER START : Lights C.F.2 FADER START : Goes off
		12<VR<21 → CH-2 FADER START : Lights C.F.2 FADER START : Lights
		22<VR → CH-2 FADER START : Goes off C.F.2 FADER START : Lights

∗ 0<VR<32

3. Setup Mode

To enter Setup mode, while holding both the CH1 FADER START and CH2 FADER START buttons pressed, press the POWER button.

Setup Mode : ON

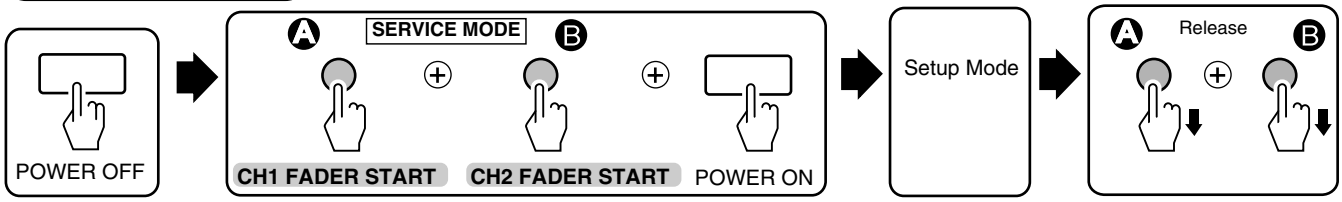

During Setup mode, the CH1 FADER START, C.F.1 FADER START, CH-2 FADER START, and C.F.2 FADER START indications light up. (If the initial setting for the noncontact fader has already been made, only the CH-1 FADER START and C.F.1 FADER START indications light.)

Setup Mode : CANCEL



4. Initial Setting for the Noncontact Fader

How to set up

① Move the crossfader lever to its leftmost position.
② While holding the CH1 FADER START button pressed, move the crossfader lever to its rightmost position.
Move the lever at a constant speed from the leftmost to the rightmost position, taking 1.5 seconds or more.
③ Release the CH1 FADER START button.

- When the initial setting is completed, the CH-1 FADER START and C.F.1 FADER START indications light up.
- If the initial setting fails, the CH-1 FADER START, C.F.1 FADER START, CH-2 FADER START, or C.F.2 FADER START indication flashes, depending on the type of error.

LED	Error
CH-1 FADER START	Start error: At the start of making the initial setting, the crossfader lever was not set to its leftmost position.
C.F.1 FADER START	Speed error: The crossfader lever was moved too quickly.
CH-2 FADER START	End error: The crossfader lever was not moved to its rightmost position.
C.F.2 FADER START	Code error: The gray codes for the crossfader could not be read.

If an error is generated, repeat from Step ① of "How to set up."

- To quit this mode, turn off the power.

5. Checking the Version

- You can check the version of the system control microcomputer by counting how many times the CH1 REVERSE and CH2 REVERSE indications flash when Setup mode is activated.

How to check the version

① The number of times the flashing CH1 REVERSE indication is lit represents the second digit of the version.
② The number of times the flashing CH2 REVERSE indication is lit represents the first digit of the version.

Example:

① The CH1 REVERSE flashes and is lit three times. → 30
② The CH2 REVERSE flashes and is lit four times. → 4
③ The version is 34 (30 + 4).

To quit this mode, turn off the power.

7.1.2 Rewriting of the Software

[RS-232C Jig Schematic Diagram] (Jig No. GGF1490)

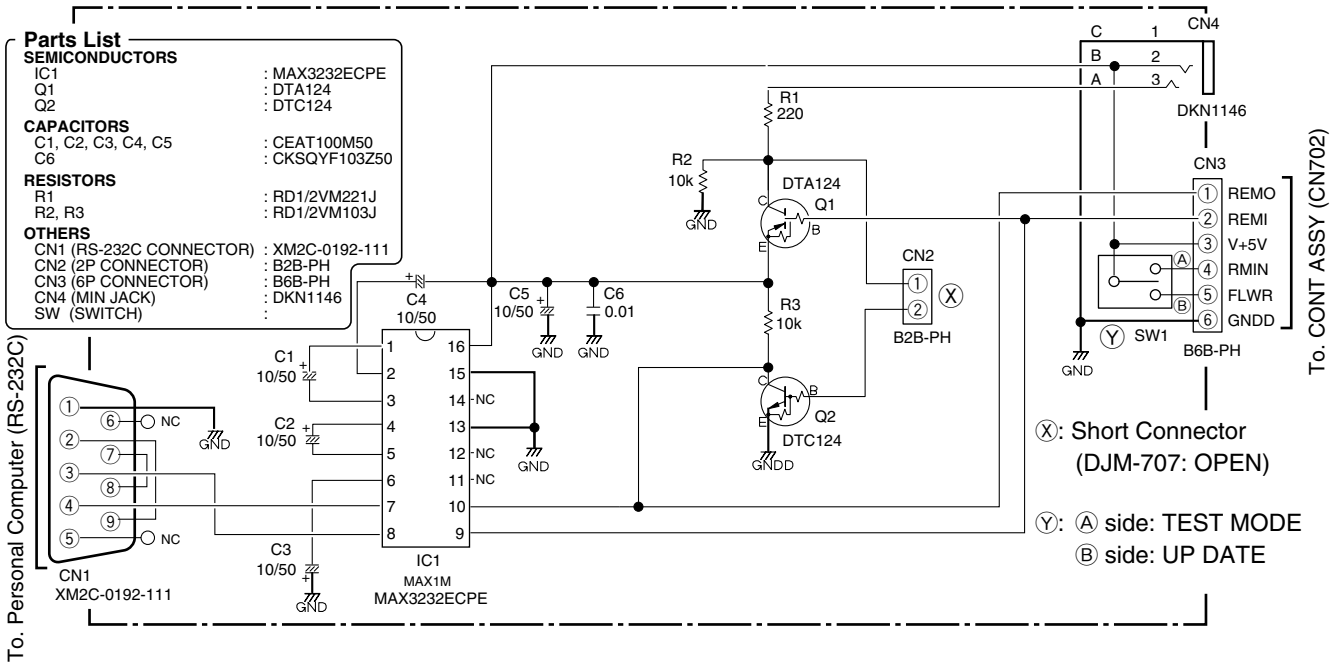

• Connection diagram of rewriting the program for the system control microcomputer

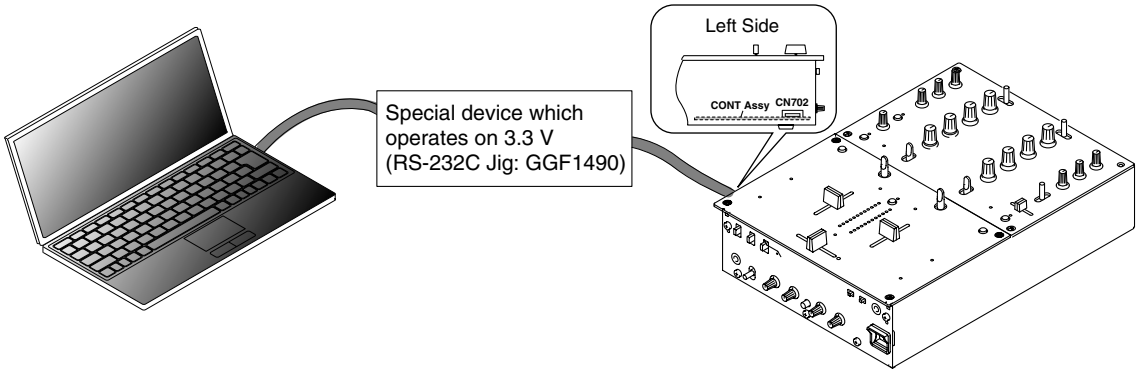

[How to rewrite the software for the DJM-707]

• Rewritable programs for the DJM-707

1. Programs for the system control microcomputer: mixer_707_xxxx.mot or PD3453x8.mot

Use the unit's connector for rewriting the program for the system control microcomputer.

• Time required for rewriting

1. Time required for transmitting the rewriting control program: Approx. 5 sec
2. Time required for rewriting the program for the system control microcomputer: Approx. 2 min 30 sec

• Notes

If the rewriting control program is not transferred when OK is clicked on while "Set to Boot mode and restart by resetting" is displayed in the rewriting procedure below, the following causes may be suspected:

1. The special device is not securely connected.
2. The DJM-707 is not turned on.

• After rewriting the system control microcomputer, make the setting for the noncontact fader (see 7.1.1 "Service mode").

1. How to rewrite the program for the system control microcomputer

① With the DJM-707's power off, connect the DJM-707 and a PC via the special device by connecting it to the connector for rewriting the program for the system control microcomputer.
② Turn on the DJM-707.
③ Start up [FLASH.exe], the software for rewriting, on the PC.
④ Assign "3068F.inf" to "Device selection Flash memory block information file."

• Operating screen

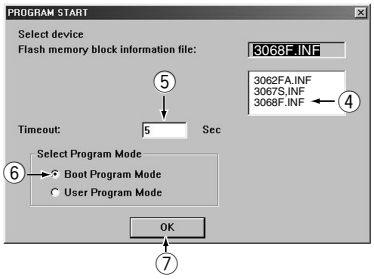

⑤ Assign 5 sec to "Timeout duration."

⑥ Assign "Boot mode" to "Mode selection."

⑦ Click on "Set".

⑧ If "Set to Boot mode and restart by resetting" is displayed, click on "OK".

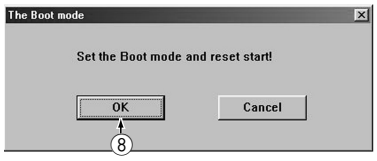

⑨ The rewriting control program is transferred in 5 seconds.

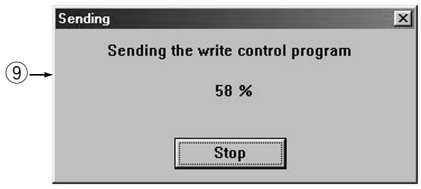

⑩ When program transfer is finished, the display in the window disappears. Select "WRITE" at the upper left of the menu bar.



⑪ After clicking on Reference, select "mixer_707_xxxx.mot" (or PD3453x8.mot) for "Filename."
⑫ Assign "00000000" to "Start address."
⑬ Assign "0003FFFF" to "End address."
⑭ Assign "0" to "Offset."
⑮ Click on "OK".

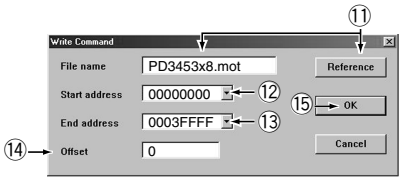

⑯ The system control computer program is transferred in 2 min 30 sec.



⑰ When program transfer is finished, the display in the window disappears. Select File on the menu bar then Exit to exit the program.



⑱ Turn off the DJM-707.
⑲ Disconnect the special device from the DJM-707.

• After rewriting the system control microcomputer, make the setting for the noncontact fader (see 7.1.1 "Service mode").

7.1.3 POWER ON SEQUENCE

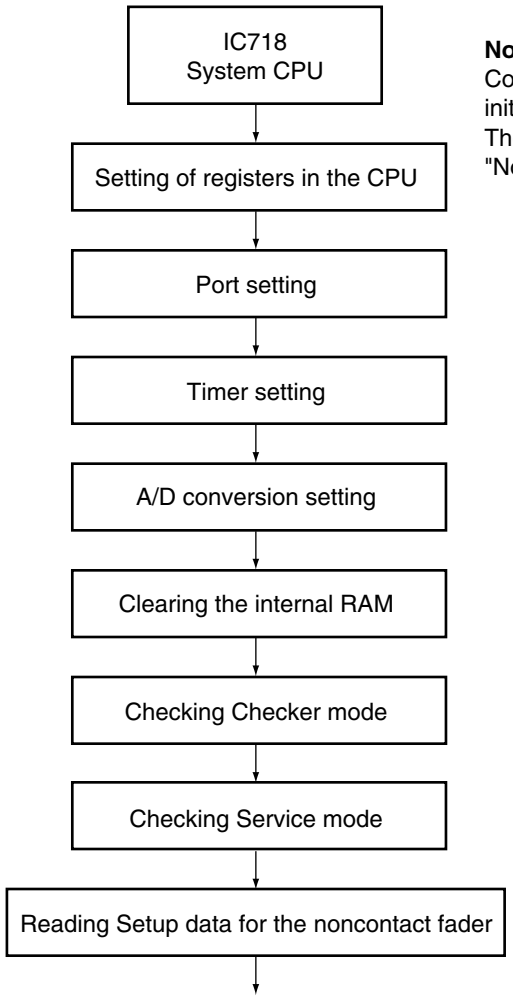

Note:
Communication with exterior IC is not performed at the time of initialization of DJM-707.
Therefore, processing from "Setup of registers in the CPU" to "Normal operation" is performed inside of the microcomputer.

To normal operation

- Main loop (2 msec period)
  Process contents
  Process of headphone
  Process of fader start signal

- Timer interrupt (100 μsec period)
  Process contents
  Fader control (Perform the following 1 process by 1 interrupt. Each process becomes a 500 μsec period.)
    0: There is no process
    1: Volume process of cross fader
    2: Volume process of CH1
    3: Volume process of CH2
    4: PWM output
  Reading of switches and volumes

7.1.4 DISASSEMBLY

■ Diagnosis of MAIN Assy

To diagnose the MAIN Assy, remove the bottom plate, as shown below:

① Remove the eight screws.
② Remove the bottom plate.

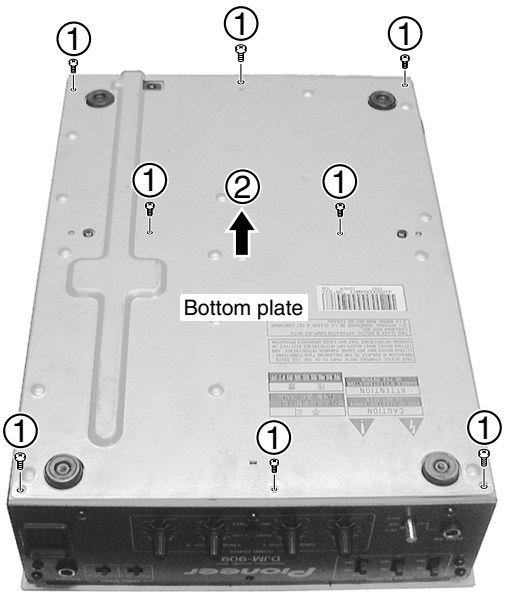

• **Bottom view**



Diagnosis

1 Diagnosis of Fader Section

① Remove the three slider knob (L)s.
② Remove the four screws.
③ Remove the control panel (D7).

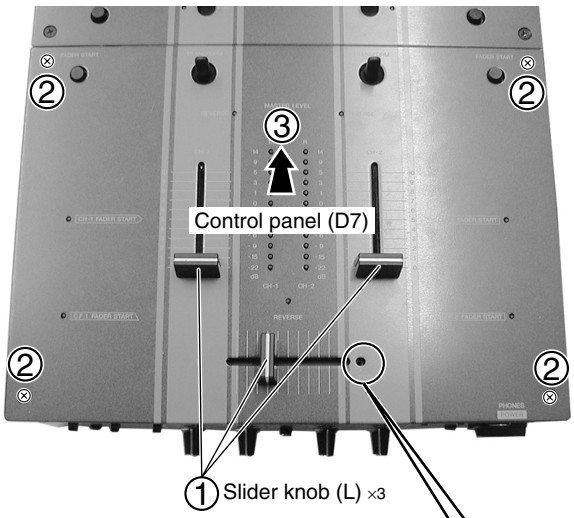

• About the load-adjuster screw (FEELING ADJ.) for the slider

Loading (smoothness) of the slider can be adjusted according to the user's preference.
For adjustment, use the supplied hexagonal driver.

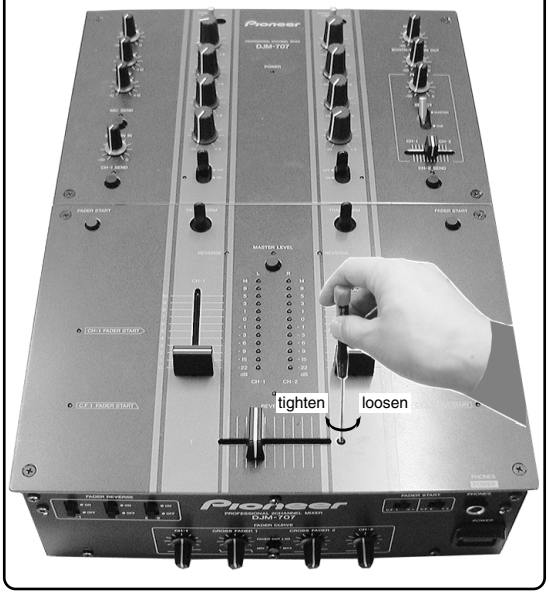

④ Remove the one screw.

⑤ Remove the panel (D) assy.

Note: As the control panel (U7) may easily get scratched, pull out or push in the panel stay (D) assy, slightly tilting it during disassembly or reassembly.

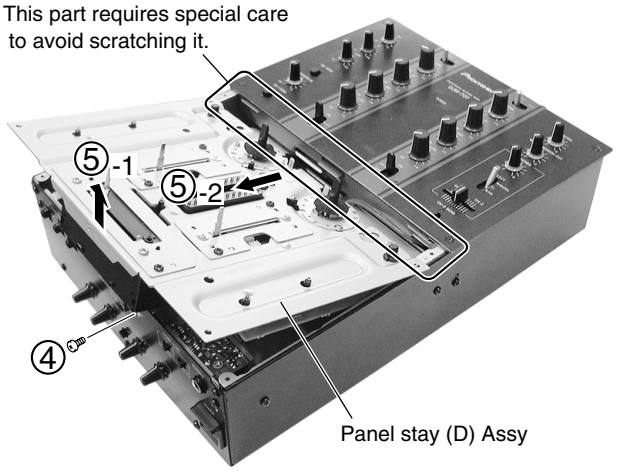

Note for removing the Front Panel block

When removing the Front Panel block from the unit, remove the screws indicated by the arrows (⇩).



⑥ Arrange the unit as shown in the photo below.

Note: As the flexible cables are short, provide a stand with a height similar to the unit's below the plate, to make your work easier.

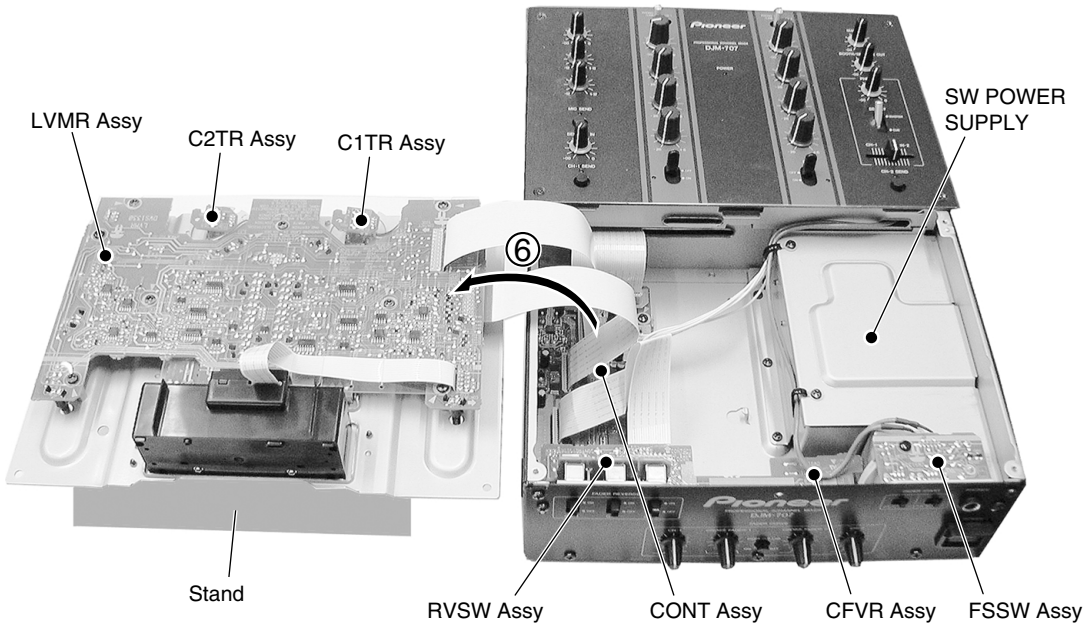

Diagnosis

⑦ Remove the six screws.
⑧ Remove the three volumes.

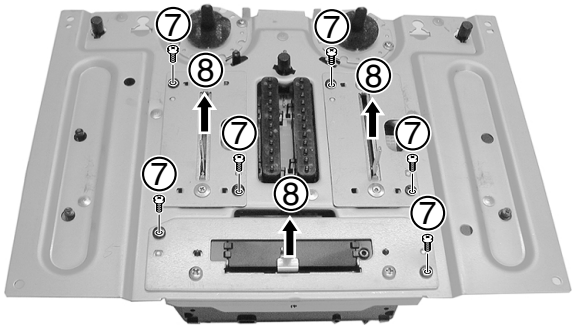

Exchange

• About the TRANSFORM ON/OFF lever

The pivot direction of the TRANSFORM ON/OFF lever can be changed by 45°, according to the user's preference.

① Remove the four screws.

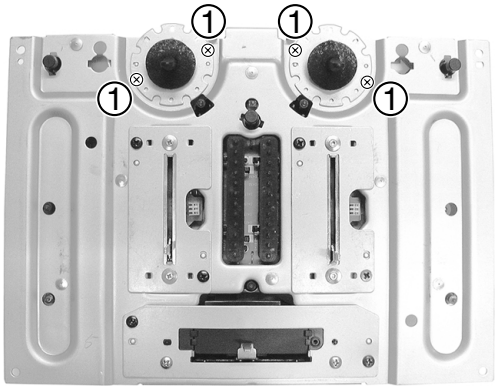

② Turn a direction.

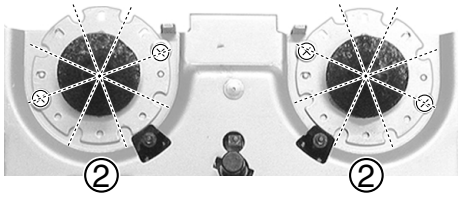

③ Reattatch the four screws.

2 Diagnosis of Volume Section

① Remove all volume knobs.
② Remove the four screws.
③ Remove the control panel (U7).

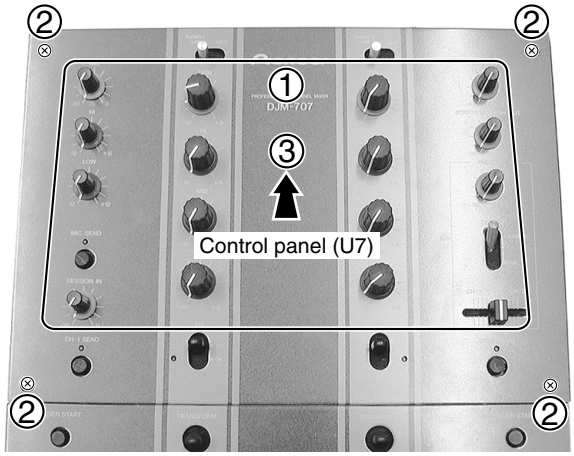

④ Remove the three screws.
⑤ Remove the eight hexagonal nuts.
⑥ Remove the Seven hexagonal nuts.
⑦ Remove the panel stay (U7).

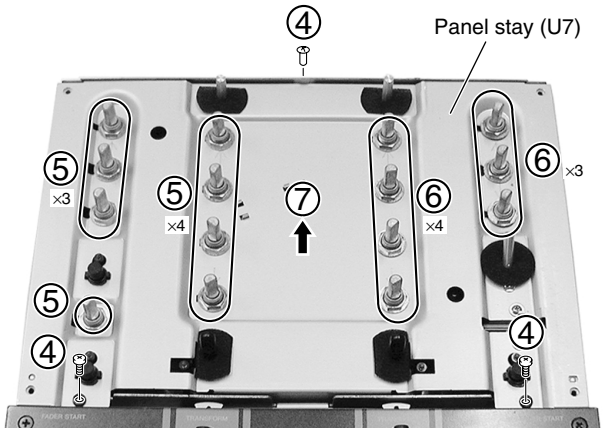

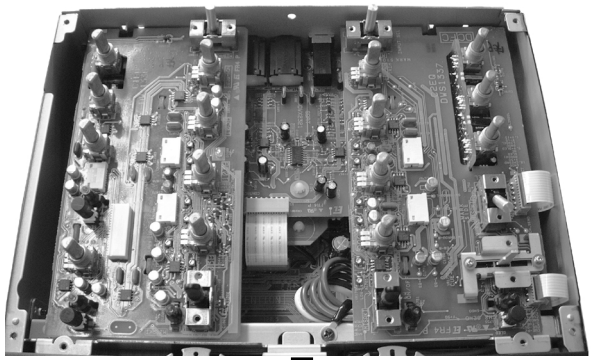

Diagnosis

3 Note for attaching the MIC LEVEL VR

① Tighten only the nut for the MIC LEVEL VR, and leave the other nuts untightened at this point.



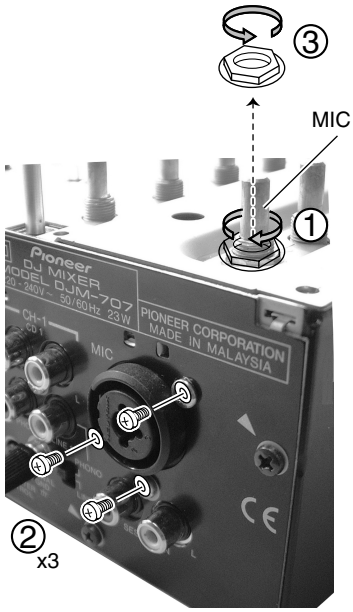

② Tighten the three screws of the MIC JACK block.

③ Remove the hexagonal nut.

④ Tighten the screws ❶ to ❾, in that order.

⑤ Tighten the 15 hexagonal nuts..

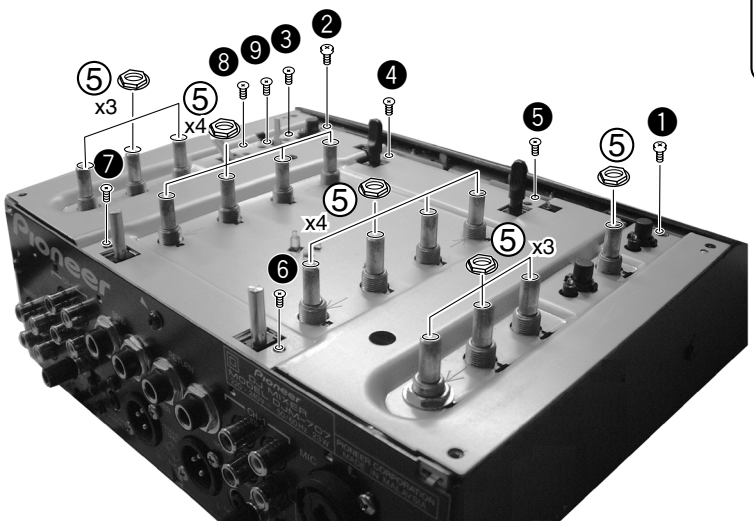

7.1.5 CONFIGURATION OF THE PC BOARD

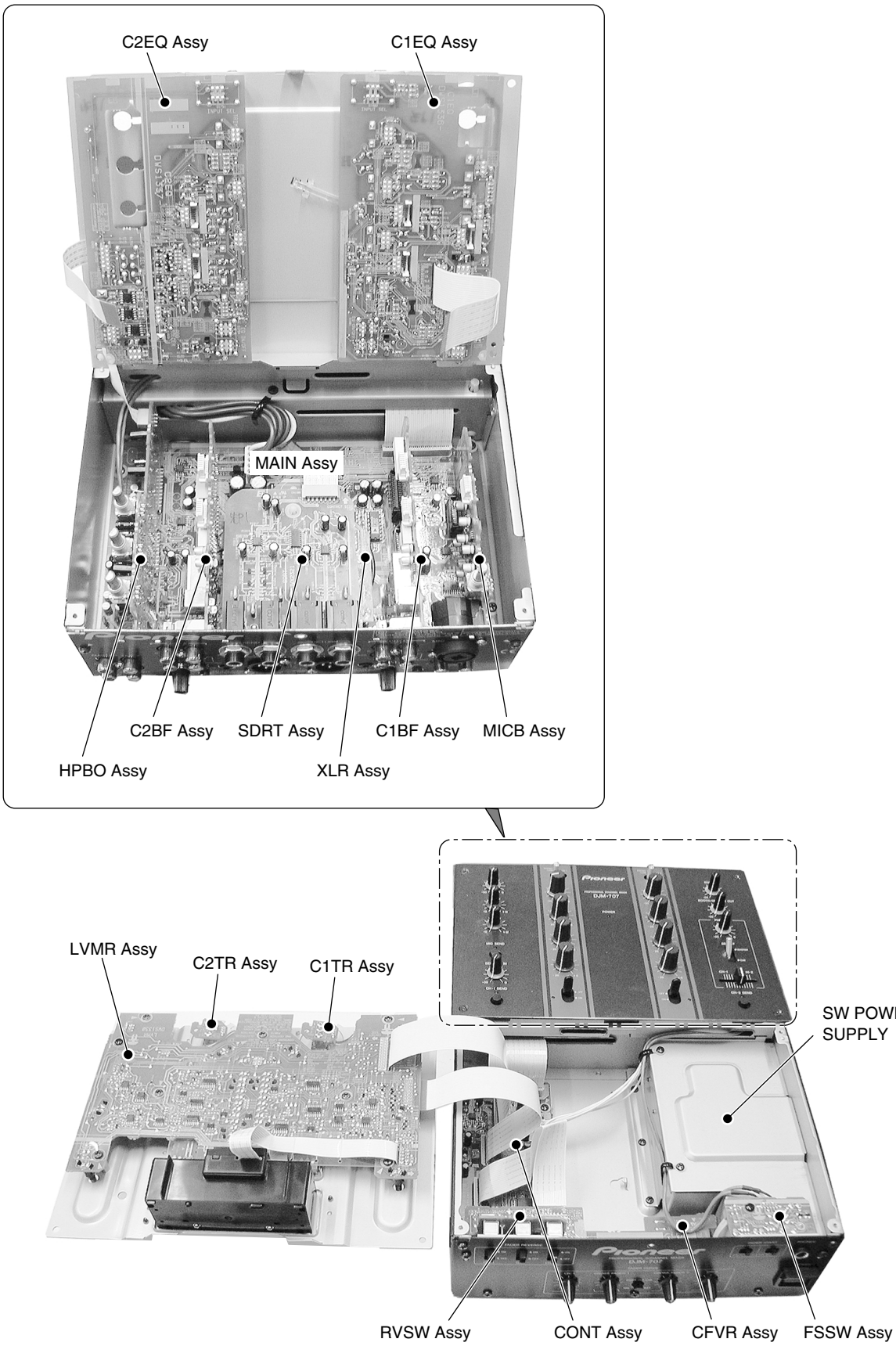

7.2 PARTS
7.2.1 IC INFORMATION

• The information shown in the list is basic information and may not correspond exactly to that shown in the schematic diagrams.

● List of IC

SSM2018TP, PD3453A8

■ SSM2018TP (MAIN ASSY : IC114-IC117)

• Voltage Controlled Amplifiers

● Pin Arrangement (Top view)

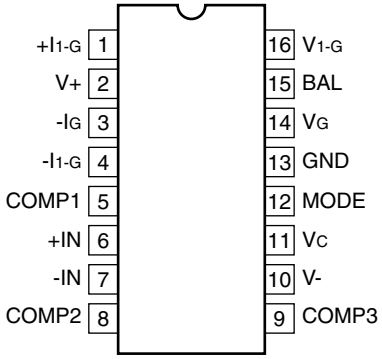

● Block Diagram

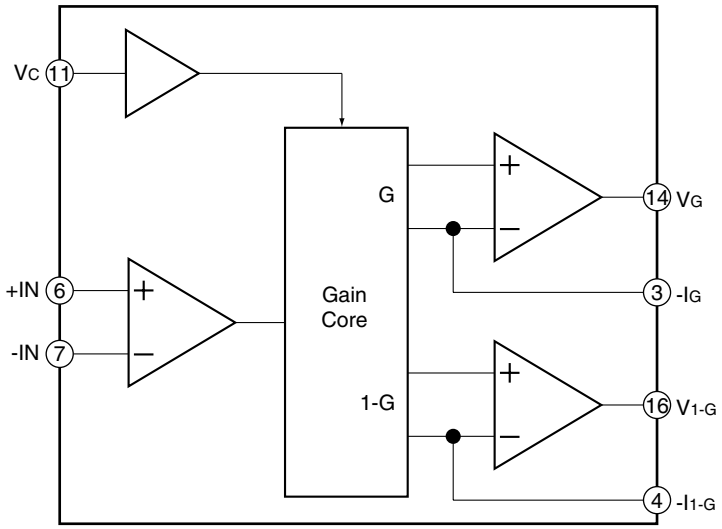

■ PD3453A8 (CONT ASSY : IC718)

• Main CPU

● Pin Function

No.	Mark	Pin Name	I/O	Function
1	Vcl	Vcl	O	Connect a external capacitor between this pin and GND
2	PB0/TP8/TMO0/XCS7	CH2_FD_ST_SW	I	Fader start switch of CH 2
3	PB1/TP9/TMO1/XCS6		I	GND
4	PB2/TP10/TMO2/XCS5	CH1_FD_R_LED	O	Fader reverse LED of CH 1
5	PB3/TP11/TMO3/XCS4	CH2_FD_R_LED	O	Fader reverse LED of CH 2
6	PB4/TP12		I	GND
7	PB5/TP13		I	GND
8	PB6/TP14	CH1_FD_ST_SW	I	Fader start switch of CH 1
9	PB7/TP15	CH2_FD_ST_LED	O	Fader start LED of CH 2
10	FEW	FLWR	I	Writing enable signal
11	Vss	Vss	I	GND
12	P90/TXD0		O	OPEN
13	P91/TXD1	S1DO	O	TXD for CPU
14	P92/RXD0		I	GND
15	P93/RXD1	S1DI	I	RXD for CPU
16	P94/SCK0/XIRQ4		I	GND
17	P95/SCK1/XIRQ5		I	GND
18	P40/D0	F_WE	O	Write permission to the flash
19	P41/D1	CRS_FDB_ST_LED	O	Fader start LED of cross fader side B
20	P42/D2		I	GND
21	P43/D3	CRS_FD_R_LED	O	Cross fader reverse LED
22	Vss	Vss	I	GND
23	P44/D4	CH2_TRS_SW	I	Transform switch of CH 2
24	P45/D5	CH1_TRS_SW	I	Transform switch of CH 1
25	P46/D6		I	GND
26	P47/D7	CH1_FD_ST_LED	O	Fader start LED of CH 1
27	P30/D8	CRS_FDA_ST_LED	O	Fader start LED of cross fader side A
28	P31/D9	TEST1	I	Port 1 for test mode
29	P32/D10	TEST2	I	Port 2 for test mode
30	P33/D11		I	GND
31	P34/D12		I	GND
32	P35/D13		I	GND
33	P36/D14	CRS_FD_R_SW	I	Cross fader reverse switch
34	P37/D15	CH2_FD_R_SW	I	Fader reverse switch of CH 2
35	Vcc	Vcc	I	Power supply
36	P10/A0	CH2_FD_SEL_SW	I	Fader select switch of CH 2
37	P11/A1	CH1_FD_R_SW	I	Fader reverse switch of CH 1
38	P12/A2	CH1_FD_SEL_SW	I	Fader select switch of CH 1
39	P13/A3		I	GND
40	P14/A4		I	GND
41	P15/A5	MON_SW1	I	
42	P16/A6		I	GND
43	P17/A7	MON_SEL1	O	
44	Vss	Vss	I	GND
45	P20/A8	HP_MUTE	O	Headphone MUTE
46	P21/A9	MUTE	O	Master MUTE
47	P22/A10	PD1	I	Gray code input signal 1 (for cross fader)
48	P23/A11	PD2	I	Gray code input signal 2 (for cross fader)

No.	Mark	Pin Name	I/O	Function
49	P24/A12	PD3	I	Gray code input signal 3 (for cross fader)
50	P25/A13	PD4	I	Gray code input signal 4 (for cross fader)
51	P26/A14	PD5	I	Gray code input signal 5 (for cross fader)
52	P27/A15		I	GND
53	P50/A16		I	GND
54	P51/A17		I	GND
55	P52/A18	ICCK	O	
56	P53/A19	ICDT	I/O	
57	Vss	Vss	I	GND
58	P60/XWAIT		I	GND
59	P61/XBREQ		I	GND
60	P62/XBACK		I	GND
61	P67/ ϕ		I	GND
62	XSTBY	XSTBY	I	Standby Low: Standby mode
63	XRES	XRESET	I	Reset input Low: Reset
64	NMI	NMI	I	Non maskable interruption request Active Low
65	Vss	Vss	I	GND
66	EXTAL	EXTAL	I	Connect a crystal resonator
67	XTAL	XTAL	I	Connect a crystal resonator
68	Vcc	Vcc	I	Power supply
69	P63/XAS	CH2_STOP	O	CH 2 stop signal of fader start
70	P64/XRD	CH2_STAT	O	CH 2 start signal of fader start
71	P65/XHWR	CH1_STOP	O	CH 1 stop signal of fader start
72	P66/XLWR	CH1_STAT	O	CH 1 start signal of fader start
73	MD0	MD0	I	Operation mode control pin MD2 : HIGH MD1 : HIGH MD0 : HIGH mode 7 Built-in ROM and RAM are valid.
74	MD1	MD1	I	
75	MD2	MD2	I	
76	AVcc	AVcc	I	Power supply for A/D converter
77	VREF	VREF	I	Reference voltage input for A/D converter
78	P70/AN0	CH2_FD_VR	I	Fader volume of CH 2
79	P71/AN1	CH1_FD_VR	I	Fader volume of CH 1
80	P72/AN2		I	GND
81	P73/AN3	CRS_FDB_CV	I	Curve volume of cross fader side B
82	P74/AN4	CRS_FDA_CV	I	Curve volume of cross fader side A
83	P75/AN5	CH2_FD_CV	I	Fader curve volume of CH 2
84	P76/AN6/DA0	CH1_FD_CV	I	Fader curve volume of CH 1
85	P77/AN7/DA1	CRS_FD_RRV	I	Cross fader response lag volume
86	AVss	Avss	I	Ground for A/D converter
87	P80/XIRQ0	PDA_S	I	PDA reserved
88	P81/XIRQ1/XCS3	PDB_S	I	PDB reserved
89	P82/XIRQ2/XCS2		I	GND
90	P83/XIRQ3/XCS1/XADTRG		I	GND
91	P84/XCS0		I	GND
92	Vss		I	GND
93	PA0/TP0/TCLKA	PDA	I	Linear encoder input signal A (for cross fader)
94	PA1/TP1/TCLKB	PDB	I	Linear encoder input signal B (for cross fader)
95	PA2/TP2/TIOCA0/TCLKC	VCA1_CONT	O	VCA control 1
96	PA3/TP3/TIOCB0/TCLKD	VCA1_S	O	VCA control 1 reserved
97	PA4/TP4/TIOCA1	VCA2_CNT	O	VCA control 2
98	PA5/TP5/TIOCB1	VCA2_S	O	VCA control 2 reserved
99	PA6/TP6/TIOCA2		I	GND
100	PA7/TP7/TIOCB2		I	GND

8. PANEL FACILITIES AND SPECIFICATIONS

■ Top Panel

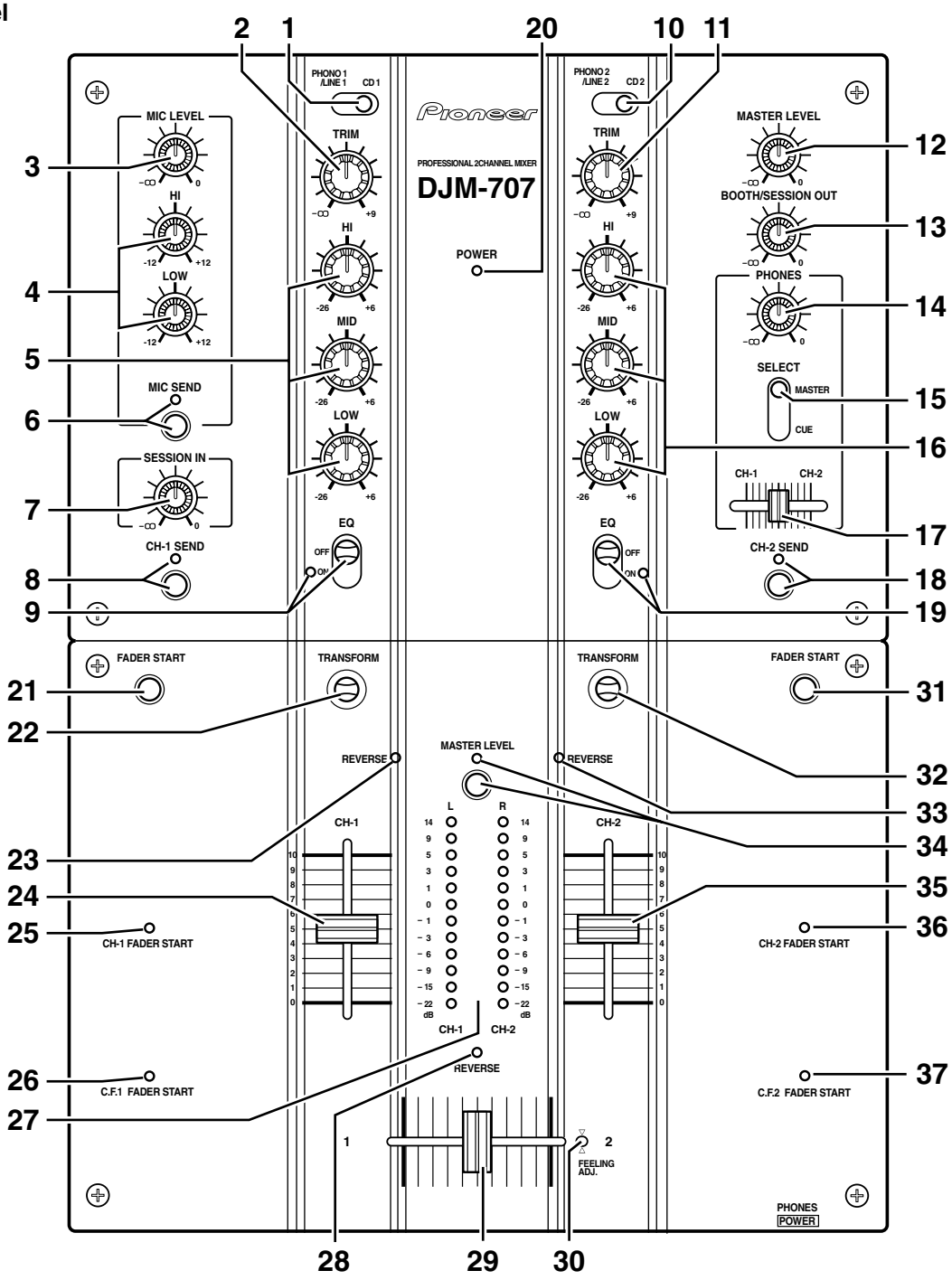

1 CH-1 input selector switch
(PHONO 1/LINE 1 – CD 1)
Use to select input signal from MIC jack, CH-1 PHONO/LINE input jacks, or CH-1 CD input jacks, and send them to the TRIM control.

2 CH-1 TRIM dial
Use to adjust the CH-1 input signal level (range of adjustment: +9 dB to –).

3 Microphone level dial (MIC LEVEL)
Use to adjust the microphone level (range of adjustment: 0 dB to –).

4 Microphone equalizer dials (HI/LOW)
HI
Use to adjust microphone treble response (range of adjustment: 10 kHz, ±12 dB).
LOW
Use to adjust microphone bass response (range of adjustment: 100 Hz, ±12 dB).

5 CH-1 equalizer dials (HI/MID/LOW)

HI

Use to adjust CH-1 input treble response
(range of adjustment: 13 kHz, +6 dB to –26 dB).

MID

Use to adjust CH-1 input midrange response
(range of adjustment: 1 kHz, +6 dB to –26 dB).

LOW

Use to adjust CH-1 input bass response
(range of adjustment: 70 Hz, +6 dB to –26 dB).

6 MIC SEND button and indicator

When set to On, the indicator lights, and microphone signals are output at the SEND jacks.

7 Session input level dial (SESSION IN)

Use to adjust the session input volume
(range of adjustment: 0 dB to –).

8 CH-1 SEND button and indicator

When set to On, the indicator lights, and CH-1 signals are output at the SEND jacks.

9 CH-1 EQ ON/OFF switch and indicator

When set to [ON], the indicator lights and CH-1 equalizer is enabled.
When set to [OFF], the indicator goes out and the equalizer circuit is bypassed.

10 CH-2 input selector switch (PHONO 2/LINE 2 – CD 2)

Use to select input signal from CH-2 PHONO/LINE input jacks, or CH-2 CD input jacks, and send them to the TRIM control.

11 CH-2 TRIM dial

Use to adjust the CH-2 input signal level
(range of adjustment: +9 dB to –).

12 MASTER LEVEL dial

User to adjust the master output volume level
(range of adjustment: 0 dB to –).

13 Booth monitor level dial (BOOTH/SESSION OUT)

Use to adjust the volume level of signals at the BOOTH/ SESSION OUT jacks (range of adjustment: 0 dB to –).
This level can be set independently of the setting of the MASTER LEVEL dial.

14 Headphones level dial (PHONES)

Use to adjust the volume level of the headphones output
(range of adjustment: 0 dB to –).

15 Monitor SELECT switch

MASTER position

selects MASTER output. (This setting allows output regardless of the setting of the MASTER LEVEL dial.)

CUE position

selects the channel adjusted with the headphone mixing lever (17).

16 CH-2 equalizer dials (HI/MID/LOW)

HI

Use to adjust CH-2 input treble response
(range of adjustment: 13 kHz, +6 dB to –26 dB).

MID

Use to adjust CH-2 input midrange response
(range of adjustment: 1 kHz, +6 dB to –26 dB).

LOW

Use to adjust CH-2 input bass response
(range of adjustment: 70 Hz, +6 dB to –26 dB).

17 Headphone mixing lever (CH-1 – CH-2)

This lever does not function when the monitor SELECT switch (15) is set to [MASTER].
When the monitor SELECT switch (15) is set to [EFFECT] or [CUE], moving the lever to the left side produces CH-1 monitor output, while moving it to the right produces CH-2 monitor output.
Centering the lever at the center detent position produces balanced output of CH-1 and CH-2 signals.

18 CH-2 SEND button and indicator

When set to On, the indicator lights, and CH-2 signals are output at the SEND jacks.

19 CH-2 EQ ON/OFF switch and indicator

When set to [ON], the indicator lights and the CH-2 equalizer is enabled.
When set to [OFF], the indicator goes out and the equalizer circuit is bypassed.

20 POWER indicator

Lights when power is turned On.

21 CH-1 FADER START button

When this button is set to On, fader start and back cue can be performed on the CH-1 CD player.
Whether the operation is initiated by operation of the CH-1 fader lever, or by the cross fader lever is determined by the position of the front panel's FADER START selector switch; the selection is indicated by the lighting of the top panel's CH-1 FADER START indicator or C.F.1 FADER START indicator.

22 CH-1 output On/Off lever (TRANSFORM)

Use to set CH-1 output to On or Off (Mute).
The lever's setting angle can be changed in 45° increments (changing of the angle should be performed by an authorized Pioneer service technician).

23 CH-1 REVERSE indicator

When lighted, indicates that the front panel's FADER REVERSE switch has been set so that the CH-1 fader lever operates in the reverse direction (see front panel item 38).

24 CH-1 fader lever

The CH-1 fader lever is used to control the level of signals sent to the cross fader. Signal level is maximum at scale mark "10," and minimum at scale mark "0".
When the front panel CH-1 FADER REVERSE switch is set to [ON], the signal level is maximum at scale mark "0," and minimum at scale mark "10".

∗ The channel fader curve can be adjusted by means of the front panel FADER CURVE dials.

25 CH-1 FADER START indicator

Lights when the CH-1 fader start/back cue function is enabled (see also top panel item 21 and front panel item 39).

26 C.f.1 FADER START indicator

Lights when the CH-1 cross-fader start/back cue function is enabled (see also top panel item 21 and front panel item 39).

27 Level meters
Displays CH-1 and CH-2 peak levels or master output (stereo) peak levels (see also item 34).

28 Cross fader REVERSE indicator
Indicates that the front panel's FADER REVERSE switch has been set so that the cross fader now operates in reverse (left side is CH-2, right side is CH-1) (see also front panel item 38).

29 Cross fader lever
When the lever is moved to the left side, CH-1 is at maximum output and CH-2 is at minimum. When moved to the right side, CH-2 is at maximum output and CH-1 is at minimum.

* The cross fader curve can be adjusted individually for CH-1 and CH-2 by means of the front panel FADER CURVE dials.

30 Operating load adjust screw (FEELING ADJ.)
The hexagonal Allen screw located next to the panel's slider opening can be rotated with a hexagonal Allen driver to adjust the sliding resistance of the cross fader lever.

31 CH-2 FADER START button
When this button is set to On, fader start and back cue can be performed on the CH-2 CD player.
Whether the operation is initiated by operation of the CH-2 fader lever, or by the cross fader lever is determined by the position of the front panel's FADER START selector switch; the selection is indicated by the lighting of the top panel's CH-2 FADER START indicator or C.F.2 FADER START indicator.

32 CH-2 output On/Off lever (TRANSFORM)
Use to set CH-2 output to On or Off (Mute).
This lever's setting angle can be changed in 45° increments (changing of the angle should be performed by an authorized Pioneer service technician).

33 CH-2 REVERSE indicator
When lighted, indicates that the front panel's FADER REVERSE switch has been set so that the CH-2 fader lever operates in the reverse direction (see front panel item 38).

34 MASTER LEVEL display button and indicator
When depressed to the On position, the indicator lights and the level meters display the master output (stereo) peak levels. When turned Off, the level meters display the peak levels for CH-1 (left) and CH-2 (right) (see also item 27).

35 CH-2 fader lever
The CH-2 fader lever is used to control the level of signals sent to the cross fader. Signal level is maximum at scale mark "10," and minimum at scale mark "0".
When the front panel CH-2 FADER REVERSE switch is set to [ON], the signal level is maximum at scale mark "0," and minimum at scale mark "10".

* The channel fader curve can be adjusted by means of the front panel FADER CURVE dials.

36 CH-2 FADER START indicator
Lights when the CH-2 fader start/back cue function is enabled (see also top panel item 31 and front panel item 39).

37 C.F.2 FADER START indicator
Lights when CH-2 cross-fader start/back cue function is enabled (see also top panel item 31 and front panel item 39).

Front Panel

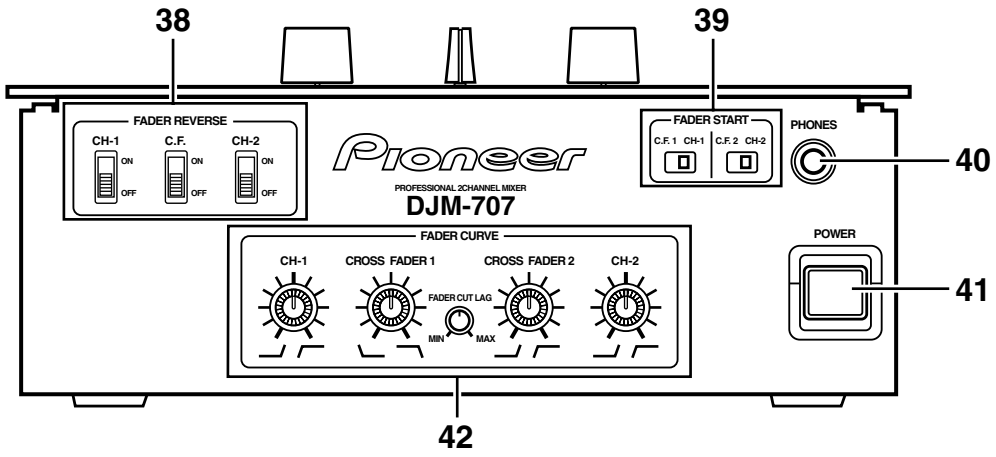

38 FADER REVERSE switches

CH-1 ON/OFF

When set to [ON], the top panel's CH-1 REVERSE indicator lights, and the CH-1 fader lever operates in the reverse direction (scale mark "0" becomes 0 dB attenuation, and "10" becomes minus infinity). The fader start function also operates in reverse.

CH-2 ON/OFF

When set to [ON], the top panel's CH-2 REVERSE indicator lights, and the CH-2 fader lever operates in the reverse direction (scale mark "0" becomes 0 dB attenuation, and "10" becomes minus infinity). The fader start function also operates in reverse.

C.F. ON/OFF

When set to [ON], the top panel's cross fader REVERSE indicator lights, and the cross fader lever operates in the reverse direction (left side becomes CH-2, and right side becomes CH-1). The fader start function also operates in reverse.

39 FADER START selector switches

C.F.1 / CH-1

This switch determines whether the fader start operation for the CD player connected to CH-1 is activated by the cross fader lever, or by the CH-1 fader lever.
When the top panel's CH-1 FADER START button is set to On, selecting [C.F.1] causes the top panel's C.F.1 FADER START indicator to light, and selecting [CH-1] causes the top panel's CH-1 FADER START indicator to light.

C.F.2 / CH-2

This switch determines whether the fader start operation for the CD player connected to CH-2 is activated by the cross fader lever, or by the CH-2 fader lever.
When the top panel's CH-2 FADER START button is set to On, selecting [C.F.2] causes the top panel's C.F.2 FADER START indicator to light, and selecting [CH-2] causes the top panel's CH-2 FADER START indicator to light.

40 Headphone output jack (PHONES)

Accepts a 6.3 mm stereo headphones plug.

41 POWER switch

42 Fader attenuation dials (FADER CURVE)

CH-1

Use to adjust CH-1's fader attenuation curve.

CH-2

Use to adjust CH-2's fader attenuation curve.

CROSS FADER 1

Use to adjust cross fader's CH-1 attenuation curve.

CROSS FADER 2

Use to adjust cross fader's CH-2 attenuation curve.

FADER CUT LAG

Use to adjust mechanical play at both extremes of the cross fader movement (the range in which lever movement produces no effect).

■ Rear Panel

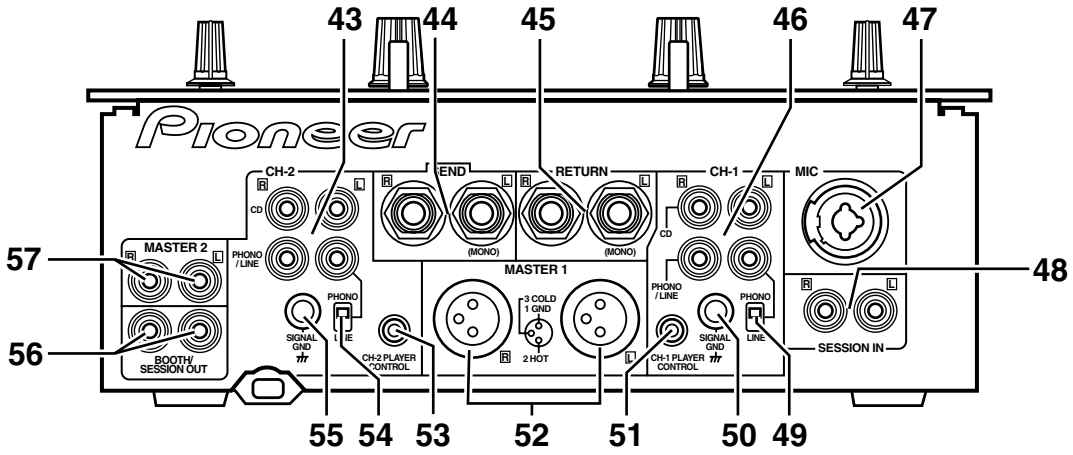

43 CH-2 input jacks

CD

Connect to audio output from CH-2 CD player.

PHONO / LINE

Connect to audio output from CH-2 analog turntable, cassette deck or other line signal level component.

44 External effector output jacks (SEND)

Connect to the input connectors of an external effector.
When the top panel switches (MIC SEND, CH-1 SEND, and CH-2 SEND) are set to On, these jacks output the MIC, CH-1, and CH-2 signals to the external effector.
When using an effector with a monaural input, connect it to the L channel output only. The signal actually sent to the effector will represent a mix of L and R signals.

45 External effector return jacks (RETURN)

Connect to the output connectors of the external effector.
When using an effector with monaural output, connect only to the L channel input. The signal received from the effector will be input to both L and R channels.

46 CH-1 input jacks

CD

Connect to the audio output of the CH-1 CD player.

PHONO / LINE

Connect to audio output from CH-1 analog turntable, cassette deck or other line signal level component.

47 Microphone input jack (MIC)

Connect to a microphone with XLR type or PHONE type plug.
When applying effects to the microphone sound, set the top panel's CH-1 input selector switch (MIC– PHONO 1/LINE 1– CD1) to the [MIC] position.

48 Session input jacks (SESSION IN)

When using multiple mixers simultaneously, connect the other mixer outputs to these jacks.

49 CH-1 PHONO/LINE selector switch

Use to set the input sensitivity at the CH-1 PHONO/LINE connectors. The [PHONO] position supports an MM type cartridge.

∗ When no analog turntable is used, set this switch to the [LINE] side.

50 CH-1 signal ground (SIGNAL GND)

Connect to the CH-1 analog turntable's ground wire. Note that this is not meant as a safety ground.

51 CH-1 PLAYER CONTROL jack

When a Pioneer DJ CD player is connected to the CH-1 CD jacks, a special control cord can be used to connect this jack to the player's control jack, thus enabling the fader start function.

52 MASTER 1 jacks

XLR type balanced output. Connect to the power amplifier's balanced input jacks.

53 CH-2 PLAYER CONTROL jack

When a Pioneer DJ CD player is connected to the CH-2 CD jacks, a special control cord used to connect this jack to the player's control jack, thus enabling the fader start function.

54 CH-2 PHONO/LINE selector switch

Use to set the input sensitivity at the CH-2 PHONO/LINE connectors. The [PHONO] position supports an MM type cartridge.

∗ When no analog turntable is used, set this switch to the [LINE] side.

55 CH-2 signal ground (SIGNAL GND)

Connect to the CH-2 analog turntable's ground wire. Note that this is not meant as a safety ground.

56 BOOTH/SESSION OUT jacks

Connector jacks for booth monitor output. When using this unit in tandem with another mixer, connect these jacks to the other mixer's session input jacks.

57 MASTER 2 jacks

RCA type unbalanced output. Connect to the power amplifier's unbalanced input jacks.