9. EXPLODED VIEWS AND PARTS LIST

NOTES:
- *Parts marked by "NSP" are generally unavailable because they are not in our Master Spare Parts List.*
- *The ⚠ mark found on some component parts indicates the importance of the safety factor of the part. Therefore, when replacing, be sure to use parts of identical designation.*
- *Screws adjacent to ▼ mark on product are used for disassembly.*
- *For the applying amount of lubricants or glue, follow the instructions in this manual. (In the case of no amount instructions, apply as you think it appropriate.)*

9.1 PACKING SECTION

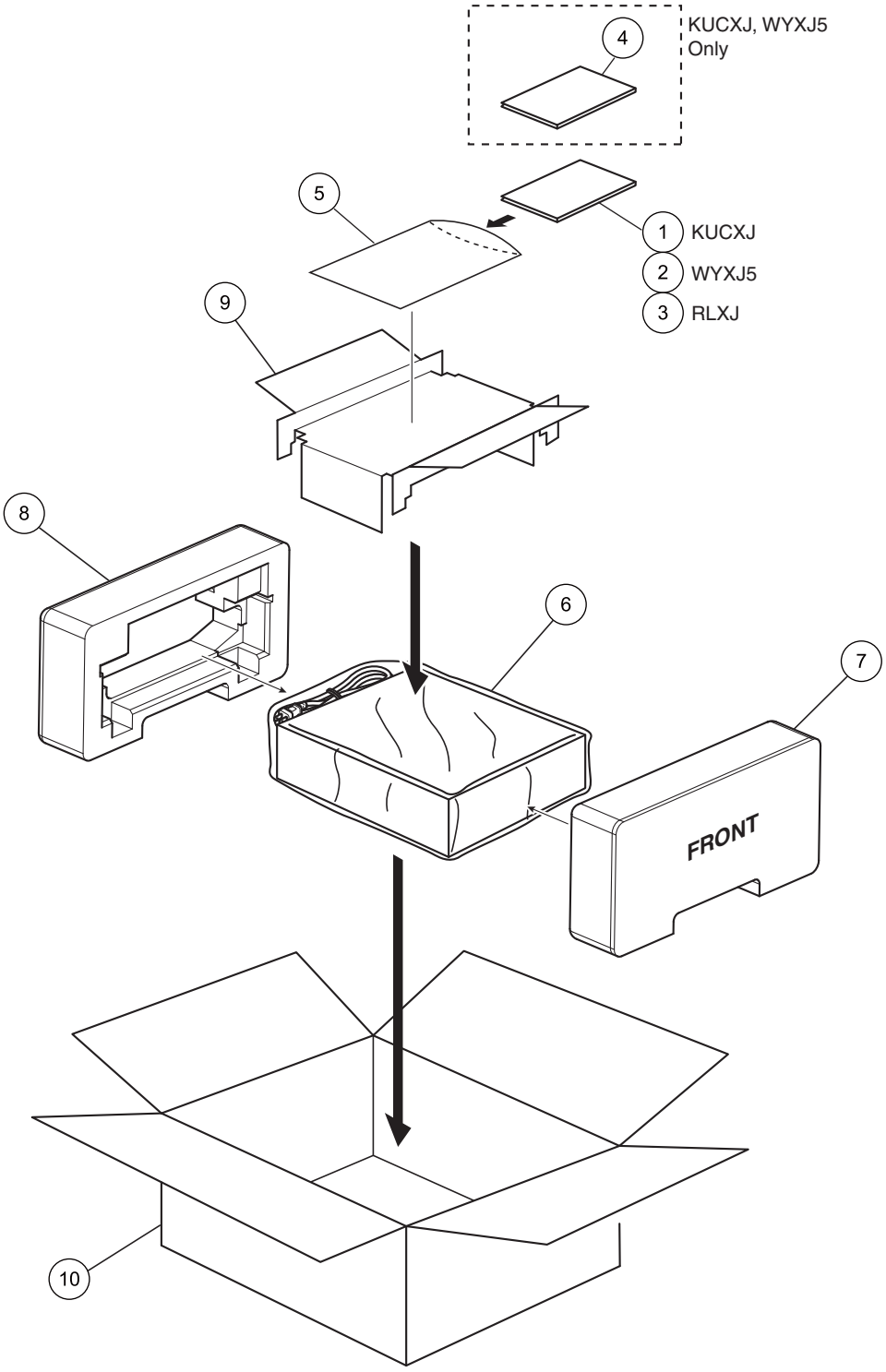

(1) PACKING SECTION PARTS LIST

Mark	No.	Description	Part No.
	1	Operating Instructions (English)	See Contrast table (2)
	2	Operating Instructions (English, French, German, Italian, Dutch, Spanish, Russian)	See Contrast table (2)
	3	Operating Instructions (English, Spanish, Chinese)	See Contrast table (2)
NSP	4	Warranty Card	See Contrast table (2)
NSP	5	Polyethylene Bag (0.06 x 230 x 340)	AHG7117
	6	Packing Sheet	AHG7010
	7	Pad F	DHA1741
	8	Pad R	DHA1742
	9	Pad T	DHA1764
	10	Carton Box	See Contrast table (2)

(2) CONTRAST TABLE

DJM-700-S/KUCXJ, WYXJ5, RLXJ, DJM-700-K/KUCXJ, WYXJ5 and RLXJ are constructed the same except for the following:

Mark	No.	Symbol and Description	DJM-700-S /KUCXJ	DJM-700-S /WYXJ5	DJM-700-S /RLXJ	DJM-700-K /KUCXJ	DJM-700-K /WYXJ5	DJM-700-K /RLXJ
	1	Operating Instructions (English)	DRB1426	Not used	Not used	DRB1426	Not used	Not used
	2	Operating Instructions (English, French, German, Italian, Dutch, Spanish, Russian)	Not used	DRB1425	Not used	Not used	DRB1425	Not used
	3	Operating Instructions (English, Spanish, Chinese)	Not used	Not used	DRB1427	Not used	Not used	DRB1427
NSP	4	Warranty Card	ARY7043	ARY7107	Not used	ARY7043	ARY7107	Not used
	10	Carton Box	DHG2690	DHG2689	DHG2691	DHG2696	DHG2695	DHG2715

9.2 EXTERIOR SECTION

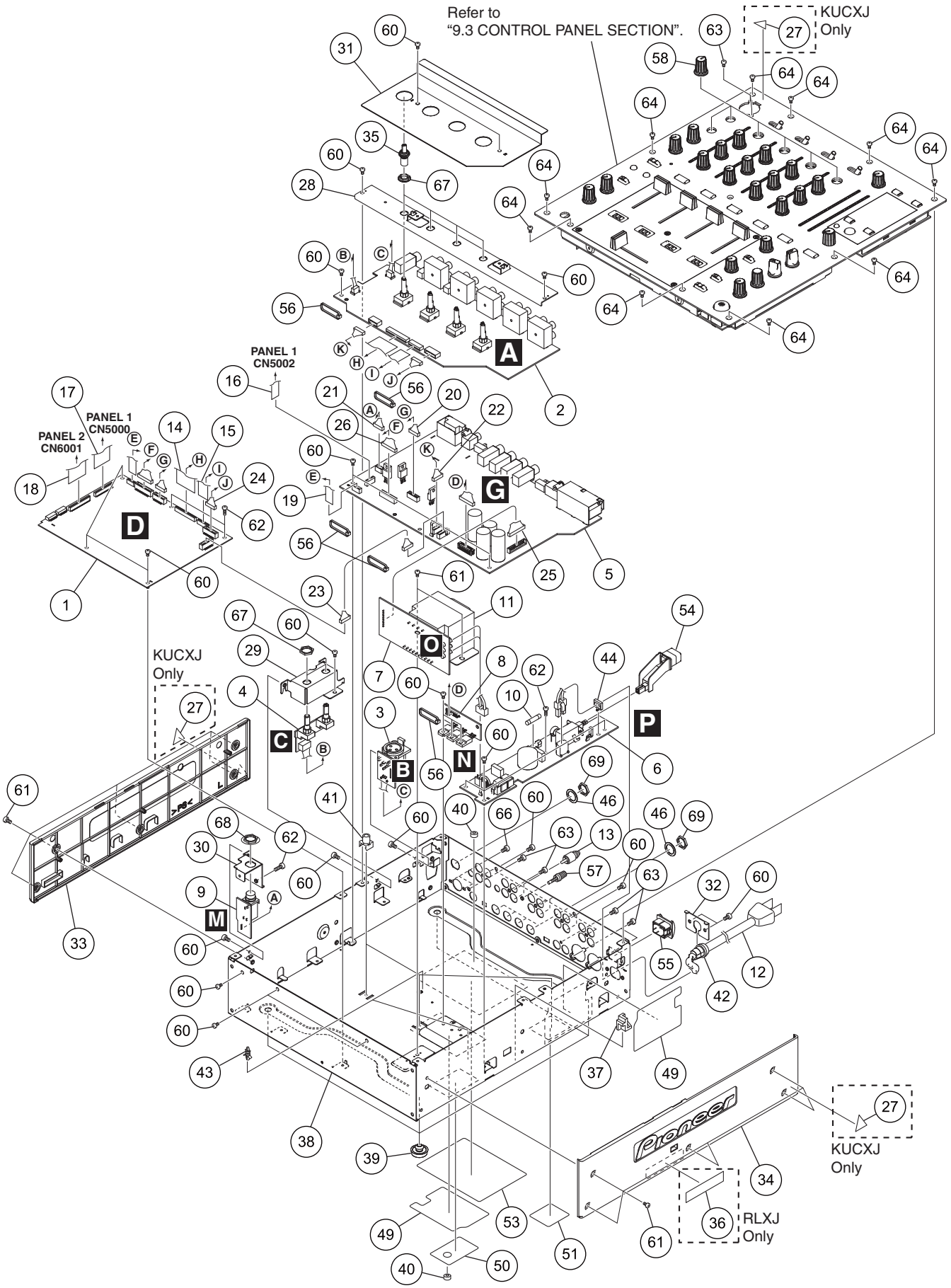

(1) EXTERIOR SECTION PARTS LIST

Mark	No.	Description	Part No.
	1	MAIN Assy	DWX2674
	2	INPUT Assy	DWX2675
	3	MIC1 JACK Assy	DWX2685
	4	MIC VR Assy	DWX2686
	5	OUTPUT Assy	DWX2676
⚠	6	PRIMARY Assy	See Contrast table (2)
	7	TRANS Assy	See Contrast table (2)
	8	REG Assy	DWX2689
	9	HP JACK Assy	DWX2690
⚠	10	Fuse (FU1901:T500mA)	AEK1051
⚠	11	Power Transformer	See Contrast table (2)
⚠	12	AC Power Cord	See Contrast table (2)
	13	Short Pin Plug	AKM7008
	14	30P FFC	DDD1362
	15	16P FFC	DDD1363
	16	11P FFC	DDD1366
	17	27P FFC	DDD1367
	18	31P FFC	DDD1368
	19	9P FFC	DDD1364
	20	Connector Assy	DKP3787
	21	Connector Assy	PF04PP-D27
	22	Connector Assy	PF06PP-D10
	23	Connector Assy	PF07PP-S12
	24	Connector Assy	PF08PP-D12
	25	Connector Assy	PF10EE-S22
	26	Connector Assy	PF11PP-D10
NSP	27	Label	See Contrast table (2)
	28	Trim Stay	DNF1765
	29	MIC VR Stay	DNF1766
	30	HP Stay	DNF1767
	31	Input Shield	DNF1770
	32	Power Cord Stay	DNF1792
	33	Side Panel L	DNK4945
	34	Side Panel R	See Contrast table (2)
	35	Extension Shaft	DNK4948
NSP	36	V Select Label	See Contrast table (2)
	37	Stopper (Screw)	DNK5084
	38	Chassis Assy	See Contrast table (2)
	39	Foot Assy	REC-434
	40	Spacer	AEB7092
	41	PCB Mold (PP)	AMR2534
	42	Cord Stopper	See Contrast table (2)
	43	Spacer	DEC2369
	44	Locking Mini Clamp	DEC2439
	45	•••••	
	46	Washer	DEC2920
	47	•••••	
	48	•••••	
	49	Bottom Sheet A	DEC3020
	50	Bottom Sheet B	DEC3021
	51	Bottom Sheet C	DEC3022
	52	•••••	
NSP	53	Label	See Contrast table (2)
	54	Button (POWER)	DAC2394
	55	Power Knob Guard	DNK4534
	56	Binder	ZCA-SKB90BK
	57	Terminal Screw	AKE-031
	58	Knob (BLACK)	DAA1212
	59	•••••	
	60	Screw	BBZ30P060FTB
	61	Screw	BBZ40P060FTB
	62	Screw	BCZ30P140FTC
	63	Screw	BPZ30P080FTB
	64	Screw	See Contrast table (2)
	65	•••••	
	66	Screw	PMH30P100FTB
	67	Flange Nut M9	DBN1008
	68	Flange Nut M12	DBN1012
	69	Nut M12	NKX2FNI

(2) CONTRAST TABLE

DJM-700-S/KUCXJ, WYXJ5, RLXJ, DJM-700-K/KUCXJ, WYXJ5 and RLXJ are constructed the same except for the following:

Mark	No.	Symbol and Description	DJM-700-S /KUCXJ	DJM-700-S /WYXJ5	DJM-700-S /RLXJ	DJM-700-K /KUCXJ	DJM-700-K /WYXJ5	DJM-700-K /RLXJ
⚠	6	PRIMARY Assy	DWX2687	DWX2687	DWX2692	DWX2687	DWX2687	DWX2692
	7	TRANS Assy	DWX2688	DWX2688	DWX2757	DWX2688	DWX2688	DWX2757
⚠	11	Power Transformer	DTT1209	DTT1208	DTT1208	DTT1209	DTT1208	DTT1208
⚠	12	AC Power Cord	VDG1075	Not used	Not used	VDG1075	Not used	Not used
⚠	12	Power Cord with Plug	Not used	VDG1061	VDG1061	Not used	VDG1061	VDG1061
NSP	27	Label	DRW1975	Not used	Not used	DRW1975	Not used	Not used
	34	Side Panel R	DNK4946	DNK4946	DNK4947	DNK4946	DNK4946	DNK4947
NSP	36	V Select Label	Not used	Not used	DRW2349	Not used	Not used	DRW2349
	38	Chassis Assy	DXB1952	DXB1951	DXB1951	DXB1952	DXB1951	DXB1951
	42	Cord Stopper	CM-22C	CM-22B	CM-22B	CM-22C	CM-22B	CM-22B
NSP	53	Label	DRW2351	DRW2350	DRW2352	DRW2357	DRW2356	DRW2358
	64	Screw	CCZ30P060FNI	CCZ30P060FNI	CCZ30P060FNI	CCZ30P060FTB	CCZ30P060FTB	CCZ30P060FTB

A

B

C

D

E

F

9.3 CONTROL PANEL SECTION

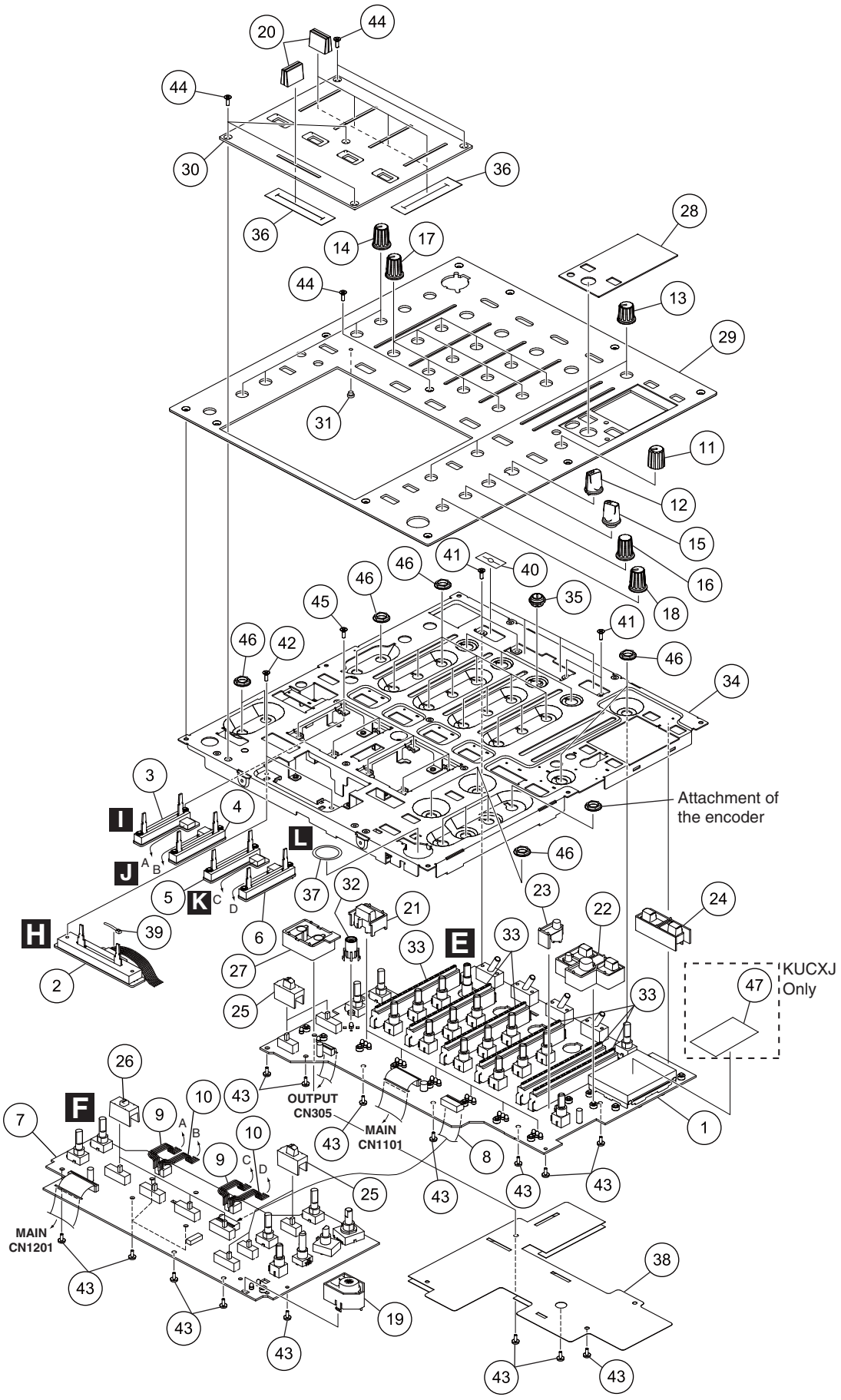

(1) CONTROL PANEL SECTION PARTS LIST

Mark	No.	Description	Part No.
	1	PANEL 1 Assy	DWX2677
	2	FADER (CROSS) Assy	DWX2680
	3	FADER (CH1) Assy	DWX2681
	4	FADER (CH2) Assy	DWX2682
	5	FADER (CH3) Assy	DWX2683
	6	FADER (CH4) Assy	DWX2684
	7	PANEL 2 Assy	DWX2678
	8	13P FFC	DDD1369
	9	Connector Assy	PF04PP-B05
	10	Connector Assy	PF04PP4B05
	11	Rotary SW Knob (HM)	DAA1197
	12	Select Knob	DAA1205
	13	Knob (MA)	DAA1210
	14	Knob (BLACK)	DAA1212
	15	FX SEL Knob	DAA1213
	16	Knob (TIME)	DAA1214
	17	Rotary SW Knob (G)	DAA1219
	18	Rotary Knob (BN)	DAA1220
	19	Effect Knob	DAC2304
	20	Slider Knob (L2)	DAC2371
	21	Button (CUE)	DAC2395
	22	Button (TAP)	DAC2397
	23	Button (FL)	DAC2398
	24	Button (MIDI)	DAC2399
	25	Slide SW Cap	DAC2400
	26	Slide SW Cap (W)	DAC2401
	27	Button (FS)	DAC2422
	28	Display Window	See Contrast table (2)
	29	Control Panel	See Contrast table (2)
	30	Fader Panel	See Contrast table (2)
	31	Lens	DNK4532
	32	Lens Holder	DNK4533
	33	Level Meter Assy	DXB1882
	34	Panel Stay	DNF1764
	35	Bush	DNK4996
	36	Fader Packing	DEC2903
	37	SW Packing	DEC2929
	38	Barrier (PANEL)	DEC3009
	39	Binder	ZCA-SKB90BK
	40	SW Packing	DED1177
	41	Screw	AMZ26P040FTC
	42	Screw	AMZ30P040FTC
	43	Screw	BBZ30P060FTB
	44	Screw	See Contrast table (2)
	45	Screw	PMA20P040FTC
	46	Flange Nut M9	DBN1008
	47	Barrier (FL)	See Contrast table (2)

(2) CONTRAST TABLE

DJM-700-S/KUCXJ, WYXJ5, RLXJ, DJM-700-K/KUCXJ, WYXJ5 and RLXJ are constructed the same except for the following:

Mark	No.	Symbol and Description	DJM-700-S /KUCXJ	DJM-700-S /WYXJ5	DJM-700-S /RLXJ	DJM-700-K /KUCXJ	DJM-700-K /WYXJ5	DJM-700-K /RLXJ
	28	Display Window S	DAH2542	DAH2542	DAH2542	Not used	Not used	Not used
	28	Display Window B	Not used	Not used	Not used	DAH2543	DAH2543	DAH2543
	29	Control Panel	DNB1152	DNB1152	DNB1152	Not used	Not used	Not used
	29	Control Panel B	Not used	Not used	Not used	DNB1153	DNB1153	DNB1153
	30	Fader Panel	DNB1154	DNB1154	DNB1154	Not used	Not used	Not used
	30	Fader Panel B	Not used	Not used	Not used	DNB1155	DNB1155	DNB1155
	44	Screw	CCZ30P060FNI	CCZ30P060FNI	CCZ30P060FNI	CCZ30P060FTB	CCZ30P060FTB	CCZ30P060FTB
	47	Barrier (FL)	DEC3058	Not used	Not used	DEC3058	Not used	Not used