9. EXPLODED VIEWS AND PARTS LIST

NOTES:
- *Parts marked by "NSP" are generally unavailable because they are not in our Master Spare Parts List.*
- *The ⚠ mark found on some component parts indicates the importance of the safety factor of the part. Therefore, when replacing, be sure to use parts of identical designation.*
- *Screws adjacent to ▼ mark on product are used for disassembly.*
- *For the applying amount of lubricants or glue, follow the instructions in this manual. (In the case of no amount instructions, apply as you think it appropriate.)*

9.1 PACKING SECTION

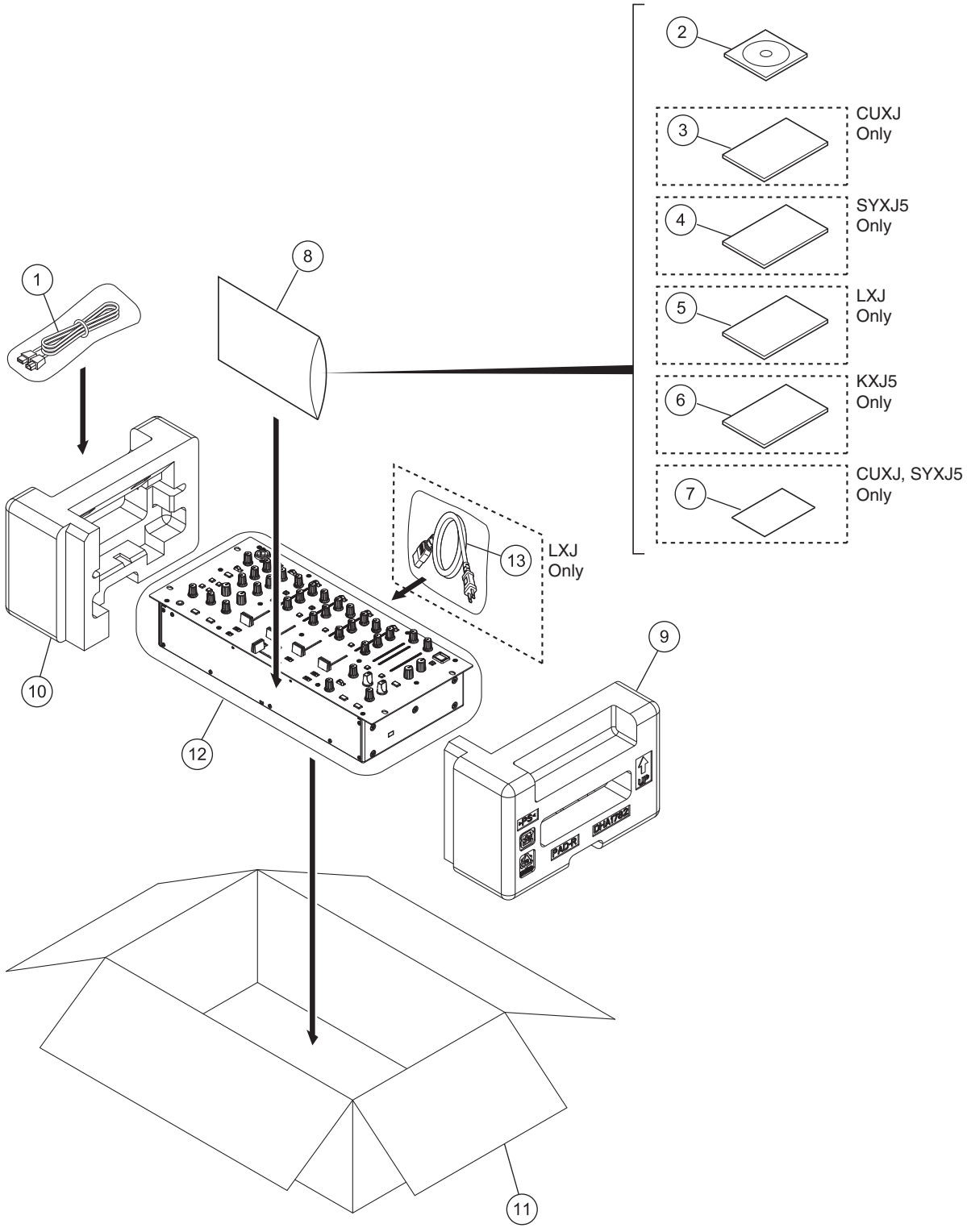

(1) PACKING SECTION PARTS LIST

Mark	No.	Description	Part No.
	1	USB Cable	DDE1128
	2	CD-ROM	DXX2596
	3	Operating Instructions	See Contrast table (2)
	4	Operating Instructions	See Contrast table (2)
	5	Operating Instructions	See Contrast table (2)
	6	Operating Instructions	See Contrast table (2)
NSP	7	Warranty Card	See Contrast table (2)
NSP	8	Polyethylene Bag (0.06 x 230 x 340)	AHG7117
	9	Pad R	DHA1782
	10	Pad L	DHA1783
	11	Packing Case	See Contrast table (2)
	12	Packing Sheet	RHC1023
⚠	13	Power Cable	See Contrast table (2)

(2) CONTRAST TABLE

DJM-5000/CUXJ, SYXJ5, LXJ and KXJ5 are constructed the same except for the following:

Mark	No.	Symbol and Description	DJM-5000 /CUXJ	DJM-5000 /SYXJ5	DJM-5000 /LXJ	DJM-5000 /KXJ5
	3	Operating Instructions (En, Fr)	DRB1491	Not used	Not used	Not used
	4	Operating Instructions (En, Fr, De, It, Nl, Es, Ru)	Not used	DRB1492	Not used	Not used
	5	Operating Instructions (En, Es, Zhtw)	Not used	Not used	DRB1493	Not used
	6	Operating Instructions (Ko)	Not used	Not used	Not used	DRB1495
NSP	7	Warranty Card	ARY7043	ARY7107	Not used	Not used
	11	Packing Case	DHG2792	DHG2793	DHG2794	DHG2797
⚠	13	Power Cable	Not used	Not used	ADG7062	Not used

9.2 EXTERIOR SECTION

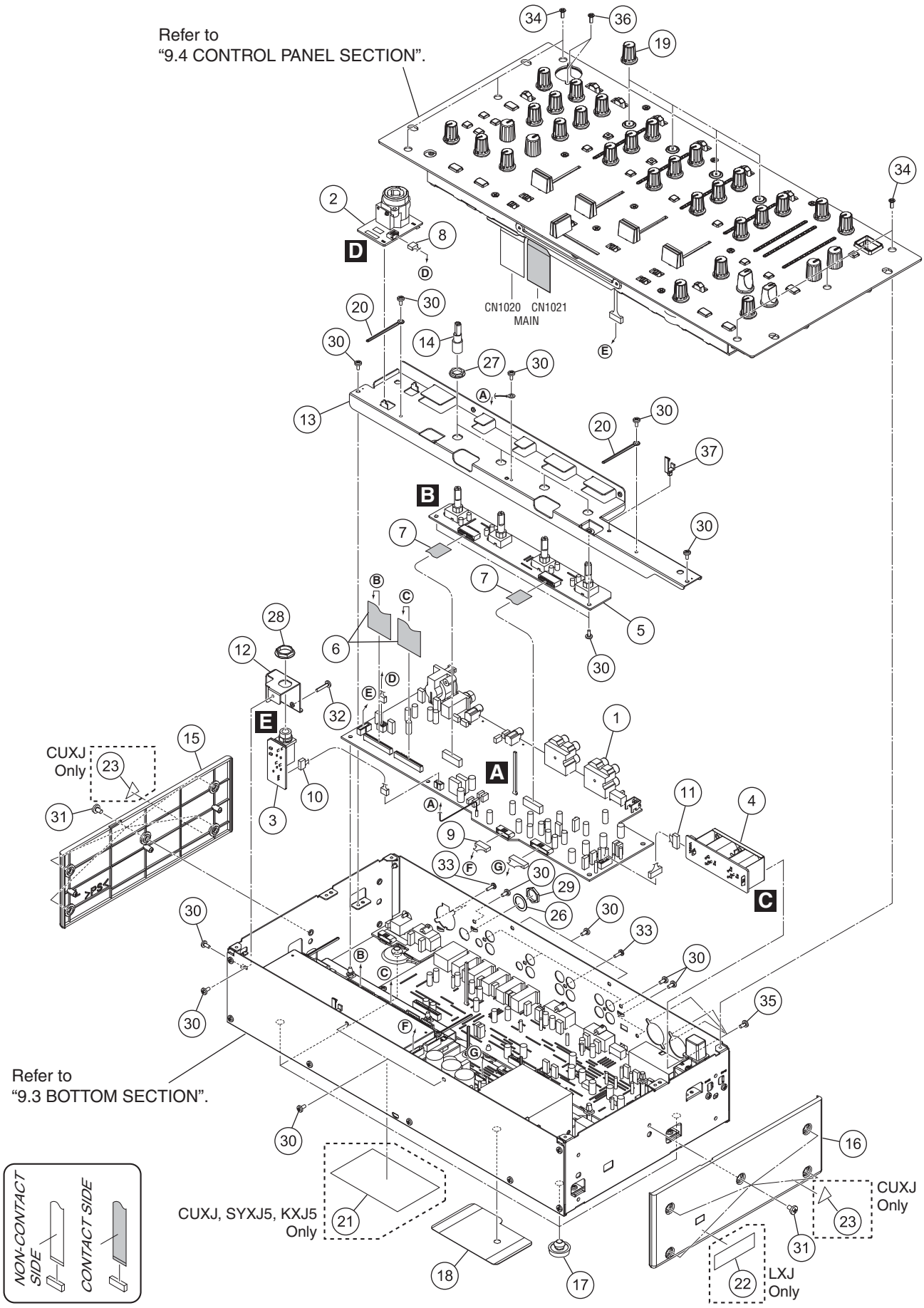

(1) EXTERIOR SECTION PARTS LIST

Mark	No.	Description	Part No.
	1	INPUT Assy	DWX2953
	2	MIC 1 AMP Assy	DWX2955
	3	HP JACK Assy	DWX2957
	4	ZONE JACK Assy	DWX3029
	5	CH TRIM Assy	DWX2964
	6	31P FFC	DDD1437
	7	14P FFC	DDD1486
	8	Connector Assy 3P	DKP3841
	9	Connector Assy 7P	DKP3848
	10	Connector Assy	PF03PP-D30
	11	Connector Assy 6P	PF06PP-D12
	12	HP Stay	DNF1830
	13	TRIM Bracket	DNF1833
	14	Extension Shaft	DNK4948
	15	Side Panel L	DNK5397
	16	Side Panel R	See Contrast table (2)
	17	Foot	REC-434
	18	Bottom Sheet A	DEC3203
	19	Rotary Knob (Gray)	DAA1249
	20	Cord Clamper	RNH-184
NSP	21	Label	See Contrast table (2)
NSP	22	Label	See Contrast table (2)
NSP	23	Caution Label	See Contrast table (2)
NSP	24	V Select Label	See Contrast table (2)
	25	Recycling Label M	See Contrast table (2)
	26	Washer	DEC2920
	27	Flange Nut M9	DBN1008
	28	Flange Nut M12	DBN1012
	29	Nut M12	NKX2FNI
	30	Screw	BBZ30P060FTB
	31	Screw	BBZ40P060FTB
	32	Screw	BCZ30P140FTC
	33	Screw	BPZ30P080FTB
	34	Screw	CCZ30P060FTB
	35	Screw	PPZ30P080FTB
	36	Screw	BPZ30P120FTB
	37	Locking Mini Clamp	DEC2439

(2) CONTRAST TABLE

DJM-5000/CUXJ, SYXJ5, LXJ and KXJ5 are constructed the same except for the following:

Mark	No.	Symbol and Description	DJM-5000 /CUXJ	DJM-5000 /SYXJ5	DJM-5000 /LXJ	DJM-5000 /KXJ5
	16	Side Panel R	DNK5398	DNK5398	DNK5399	DNK5398
NSP	21	Label	DRW2392	DRW2393	Not used	DRW2397
NSP	22	Label	Not used	Not used	DRW2394	Not used
NSP	23	Caution Label	DRW1975	Not used	Not used	Not used
NSP	24	V Select Label	Not used	Not used	DRW2400	Not used
	25	Recycling Label M	Not used	Not used	Not used	DRW2307

9.3 BOTTOM SECTION

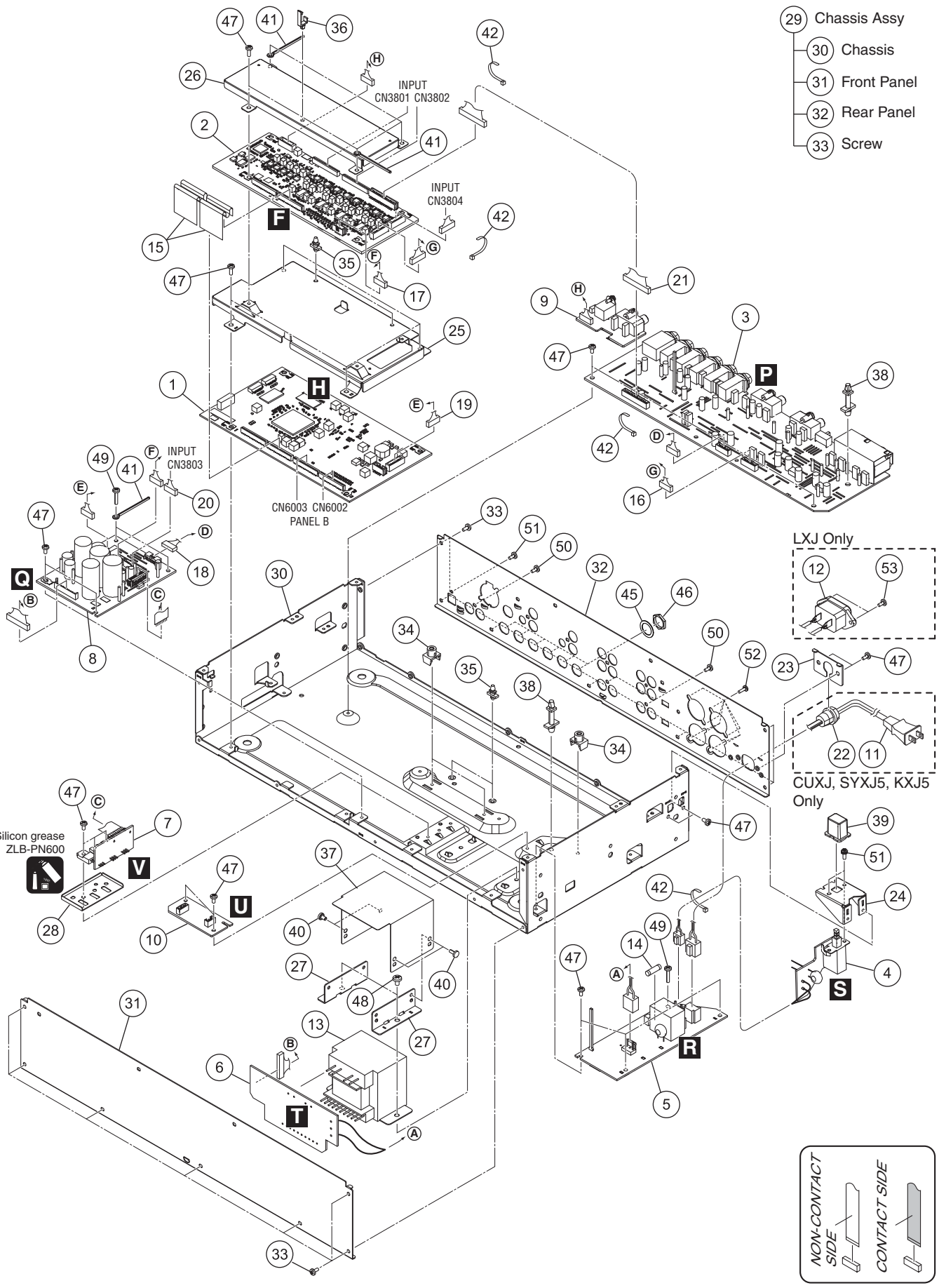

(1) BOTTOM SECTION PARTS LIST

Mark	No.	Description	Part No.
	1	MAIN Assy	DWX2952
	2	DAC Assy	DWX3027
	3	OUTPUT Assy	DWX2954
	4	PWR SW Assy	DWR1445
NSP	5	PRIMARY Assy	See Contrast table (2)
	6	TRANS Assy	See Contrast table (2)
	7	REG Assy	DWR1448
	8	PWR SECONDARY Assy	DWR1449
	9	USB/DIG JACK Assy	DWX2959
	10	STANDBY Assy	DWX3028
⚠	11	AC Power Cord	See Contrast table (2)
	12	AC Inlet Assy	See Contrast table (2)
⚠	13	Power Transformer	See Contrast table (2)
⚠	14	Fuse (T400 mA)	AEK1050
	15	29P FFC	DDD1468
	16	Connector Assy 8P	DKP3840
	17	Connector Assy	PF05PP-S12
	18	Connector Assy	PF07PP-D07
	19	Connector Assy	PF08PP-S07
	20	Connector Assy	PF10PP-S10
	21	Connector Assy	PF15PP-D20
	22	Cord Stopper	See Contrast table (2)
	23	Power Cord Stay	DNF1857
	24	POWER SW Stay	DNF1831
	25	Main Shield	DNF1832
	26	DAC Shield	DNF1835
	27	Trans Stay	DNF1839
	28	Heatsink	DNG1113
	29	Chassis Assy	See Contrast table (2)
NSP	30	Chassis	DNA1364

Mark	No.	Description	Part No.
	31	Front Panel	DNB1183
	32	Rear Panel	See Contrast table (2)
	33	Screw	BBZ30P060FTB
	34	PCB Mold	AMR2534
	35	Spacer	DEC2369
	36	Locking Mini Clamp	DEC2439
	37	Barrier (Trans)	DEC3183
NSP	38	PC Support	VEC1584
	39	POWER Knob	DAC2519
	40	Push Rivet	XEC3034
	41	Cord Clamper	RNH-184
	42	Binder (SKB-90BK)	ZCA-SKB90BK
	43	•••••	
	44	•••••	
	45	Washer	DEC2920
	46	Nut M12	NKX2FNI
	47	Screw	BSZ30P060FTC
	48	Screw	BBZ40P060FTB
	49	Screw	BCZ30P140FTC
	50	Screw	BPZ30P080FTB
	51	Screw	PMH30P080FTB
	52	Screw	PPZ30P080FTB
	53	Screw	See Contrast table (2)

(2) CONTRAST TABLE

DJM-5000/CUXJ, SYXJ5, LXJ and KXJ5 are constructed the same except for the following:

Mark	No.	Symbol and Description	DJM-5000 /CUXJ	DJM-5000 /SYXJ5	DJM-5000 /LXJ	DJM-5000 /KXJ5
NSP	5	PRIMARY Assy	DWR1446	DWR1446	DWR1450	DWR1446
	6	TRANS Assy	DWR1447	DWR1447	DWR1451	DWR1447
⚠	11	AC Power Cord	VDG1075	VDG1061	Not used	XDG3053
	12	AC Inlet Assy	Not used	Not used	DKP3843	Not used
⚠	13	Power Transformer	DTT1226	DTT1225	DTT1225	DTT1225
	22	Cord Stopper	CM-22C	CM-22B	Not used	CM-22B
	29	Chassis Assy	DXB2035	DXB2047	DXB2048	DXB2051
	32	Rear Panel	DNC1924	DNC1925	DNC1926	DNC1929
	53	Screw	Not used	Not used	IBZ30P080FTB	Not used

9.4 CONTROL PANEL SECTION

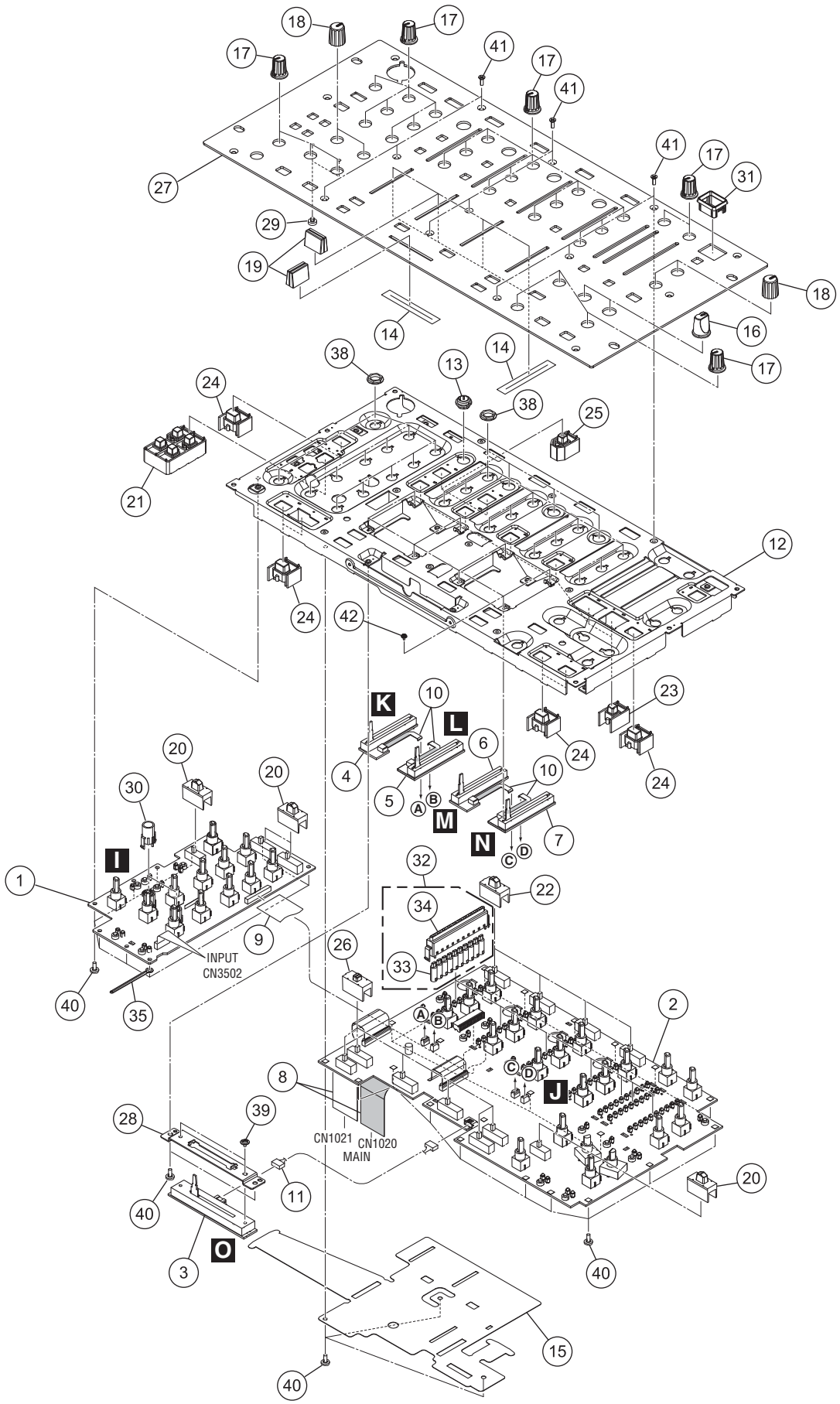

CONTROL PANEL SECTION PARTS LIST

Mark	No.	Description	Part No.
	1	PANEL A Assy	DWX2961
	2	PANEL B Assy	DWX2962
	3	CRS FADER Assy	DWX2972
	4	CH1 FADER Assy	DWX2968
	5	CH2 FADER Assy	DWX2969
	6	CH3 FADER Assy	DWX2970
	7	CH4 FADER Assy	DWX2971
	8	29P FFC	DDD1469
	9	22P FFC	DDD1471
	10	4P FFC	DDD1472
	11	Connector Assy	PF04PP-D10
	12	Panel Stay	DNF1834
	13	Bushing	DNK4996
	14	Fader Packing	DEC2903
	15	Barrier (Panel)	DEC3175
	16	FX SEL Knob	DAA1213
	17	Rotary Knob (Black)	DAA1248
	18	Rotary SW Knob (HM)	DAA1256
	19	Slider Knob (L2)	DAC2371
	20	Slide SW Cap	DAC2400
	21	SET Knob (MIC EFX)	DAC2516
	22	Slide SW Cap (LINE)	DAC2517
	23	CUE Knob	DAC2521
	24	MIC Knob	DAC2522
	25	FS Knob	DAC2524
	26	Slide SW Cap (B)	DAC2537
	27	Control Panel	DNB1167
	28	CRF Bracket	DNF1828
	29	Lens	DNK4532
	30	Lens Holder	DNK4533
	31	Power Knob Guard	DNK5388
	32	Level Meter Assy	DXB2028
	33	Level Meter Lens	DNK4530
	34	Level Meter Cap	DNK5273
	35	Cord Clamper	RNH-184
	36	•••••	
	37	•••••	
	38	Flange Nut M9	DBN1008
	39	Screw	IMZ30P040FTC
	40	Screw	BBZ30P060FTB
	41	Screw	CCZ30P060FTB
	42	Screw	PMA20P040FTC