9. EXPLODED VIEWS AND PARTS LIST

NOTES:
- *Parts marked by "NSP" are generally unavailable because they are not in our Master Spare Parts List.*
- *The ⚠ mark found on some component parts indicates the importance of the safety factor of the part. Therefore, when replacing, be sure to use parts of identical designation.*
- *Screws adjacent to ▼ mark on product are used for disassembly.*
- *For the applying amount of lubricants or glue, follow the instructions in this manual. (In the case of no amount instructions, apply as you think it appropriate.)*

9.1 PACKING SECTION

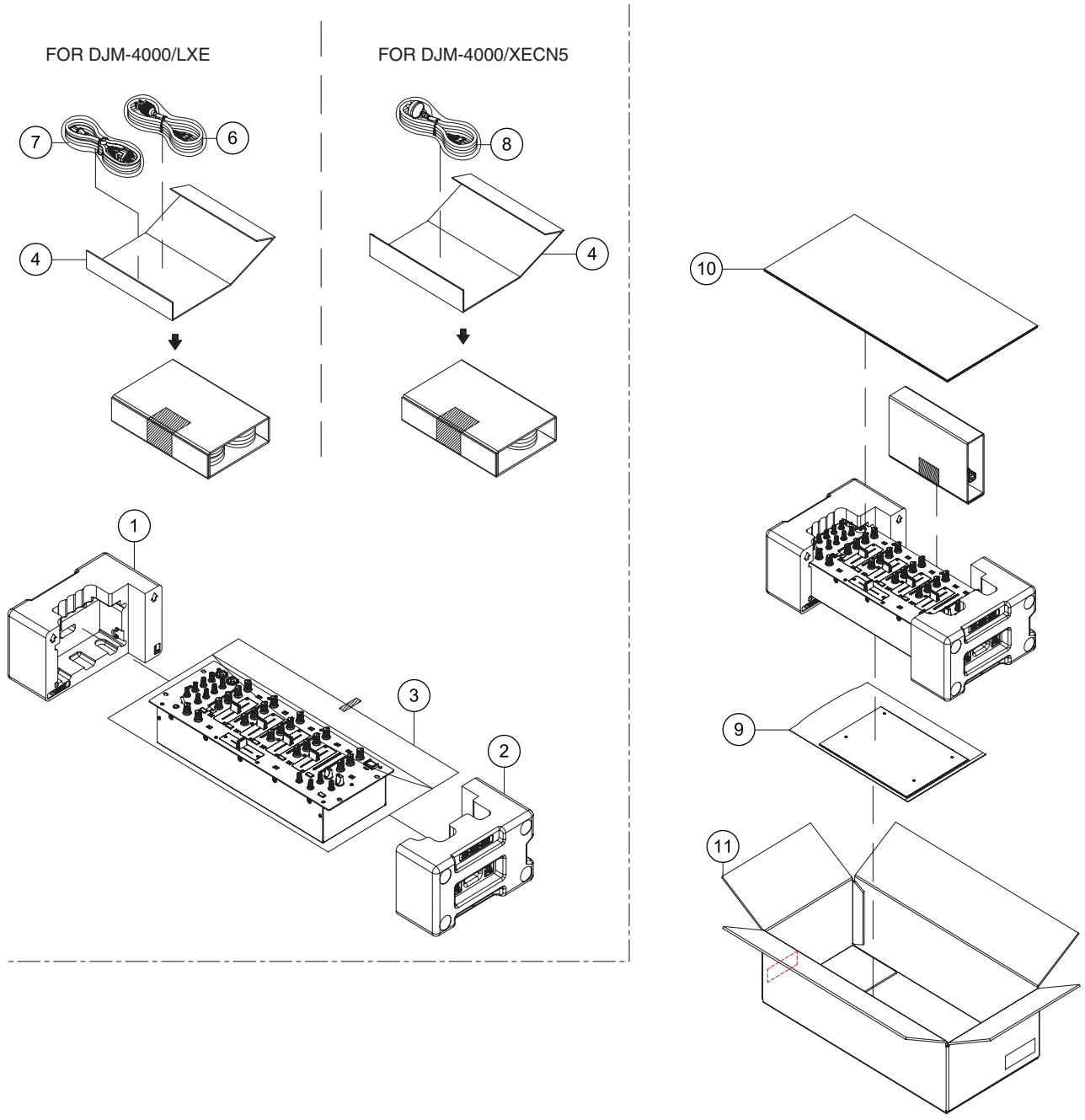

PACKING SECTION PARTS LIST

Mark	No.	Description	Part No.
	1	Polyfoam L	506-4000-635L-HA
	2	Polyfoam R	506-4000-635R-HA
	3	Soft Bag	509-4000-314-HA
	4	Box	507-4000-3346-HA
	5	•••••	
⚠	6	AC Power Cord UL/CSA (LXE)	409-HDJ7100-054D-HA
⚠	7	AC Power Cord VDE (LXE)	409-HDJ7100-055D-HA
⚠	8	AC Power Cord 3C (XECN5)	409-DMX101-218-HA
	9	Operating instructions (Es/En) (LXE)	502-D4000A-3200-HA
	9	Operating instructions (Zhcn/En) (XECN5)	502-D4000B-3201-HA
	10	Support Pasteboard	507-4000-3345-HA
	11	Gift Box (LXE)	507-4000-3344-HA
	11	Gift Box (XECN5)	507-4000B-3344-HA

9.2 EXTERIOR SECTION

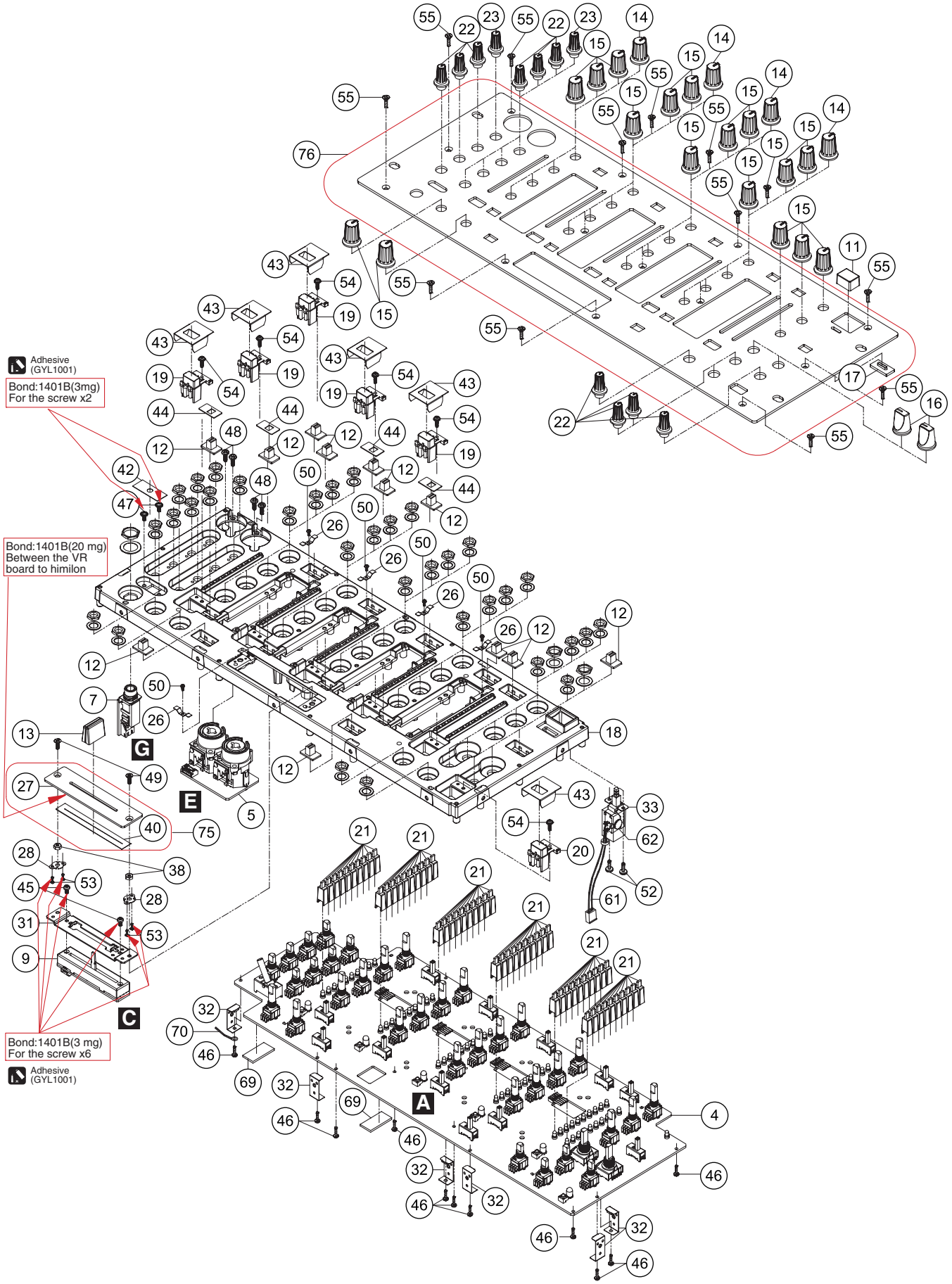

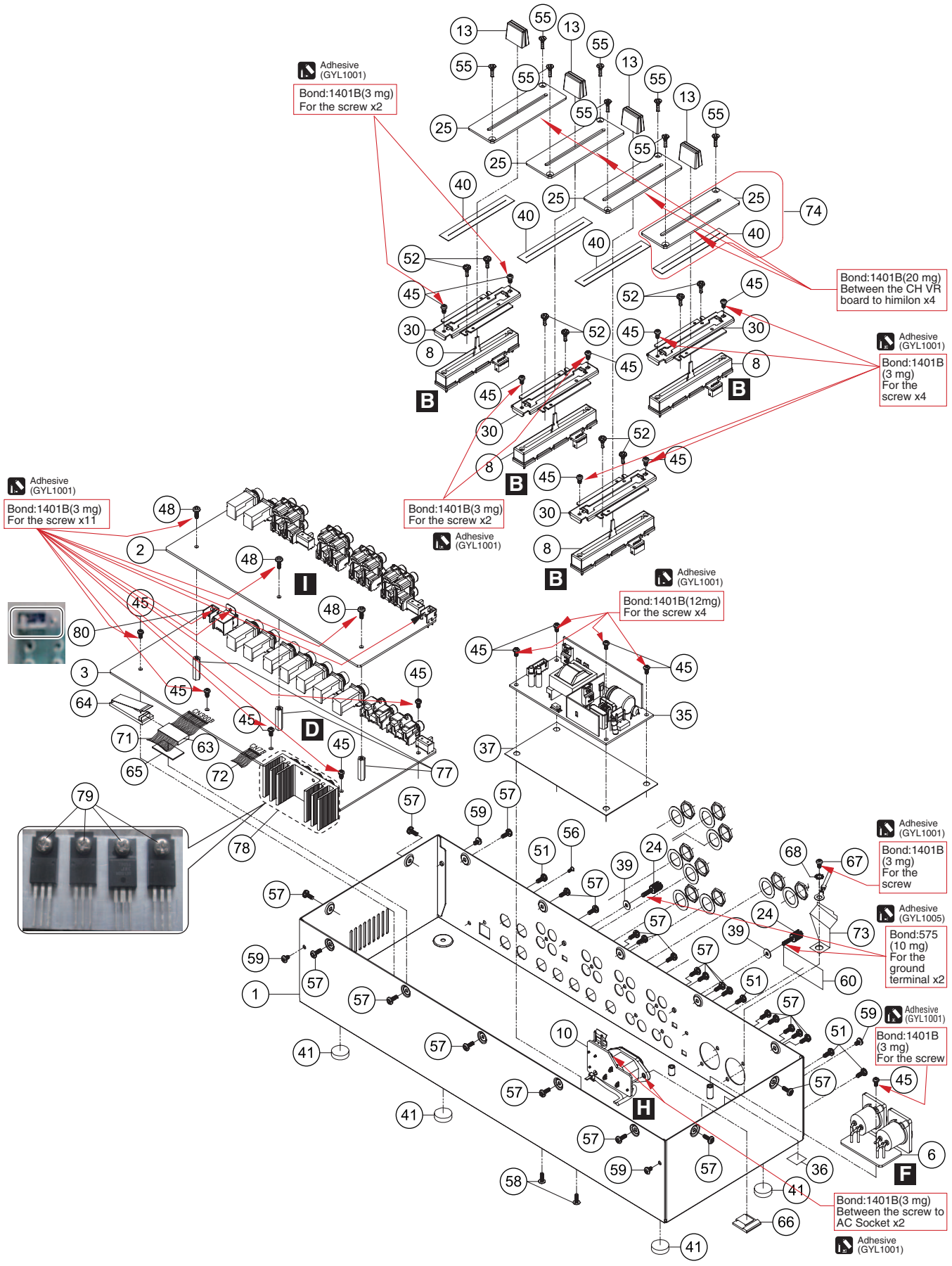
Adhesive (GYL1001)
Bond:1401B(3 mg) For the screw x2
Bond:1401B(20 mg) Between the CH VR board to himilon x4
Adhesive (GYL1001)
Bond:1401B (3 mg) For the screw x4
Adhesive (GYL1001)
Bond:1401B(3 mg) For the screw x11
Bond:1401B(3 mg) For the screw x2
Adhesive (GYL1001)
Adhesive (GYL1001)
Bond:1401B(12mg) For the screw x4
Adhesive (GYL1001)
Bond:1401B (3 mg) For the screw
Adhesive (GYL1005)
Bond:575 (10 mg) For the ground terminal x2
Adhesive (GYL1001)
Bond:1401B (3 mg) For the screw
Bond:1401B(3 mg) Between the screw to AC Socket x2
Adhesive (GYL1001)
B
I
D
H
F

EXTERIOR SECTION PARTS LIST

Mark	No.	Description	Part No.
NSP	1	Base Assy	
	2	INPUT PCB ASSY	704-DJM4000-A283-HA
	3	OUTPUT PCB ASSY	704-DJM4000-A284-HA
	4	MIXER PCB ASSY	704-DJM4000-A291-HA
	5	MIC PCB ASSY	704-DJM4000-A293-HA
	6	BAL. OUT PCB ASSY	704-DJM4000-A294-HA
	7	PHONE PCB ASSY	704-DJM4000-A295-HA
	8	CH FADER PCB ASSY	704-DJM4000-A296-HA
	9	CROSS FADER PCB ASSY	704-DJM4000-A297-HA
	10	AC SOCKET PCB ASSY	704-DJM4000-A298-HA
	11	Power Knob	100-HDJ2000-1641-HA
	12	Push Button	100-MX200-2706-HA
	13	Push Button	100-22-2824-HA
	14	Rotary Knob	100-DJM100-2826-HA
	15	Rotary Knob	100-DJM250-2826-HA
	16	Band Rotational Knob	100-DJM100-2873-HA
NSP	17	Filter Lens	100-DJM100-2876-HA
	18	Frame Plastic	100-4000-2920-HA
	19	Square Button	100-4000-2921-HA
	20	Square Button	100-4000-2921S-HA
	21	LED Pervious Cover	100-4000-2922-HA
	22	Rotate Knob	100-4000-2923-HA
	23	Rotate Knob	100-4000A-2923-HA
	24	Ground Terminal	200-GND-642-HA
NSP	25	CH VR Board	
	26	Ground Plate	300-MX200-1743-HA
NSP	27	VR Board	
	28	Fixed Cover	300-33-1918-HA
	29	•••••	
	30	Fixed Plate	300-4000-2014-HA
	31	CS Fixed Plate	300-4000-2015-HA
	32	Ground Plate	300-4000-2016-HA
	33	Power SW	403-A100-005-HA
	34	•••••	
⚠	35	Switching Power	411-DJM4000-855-HA
NSP	36	Ground Label	
NSP	37	Isegregate Sheet	
	38	Nut(M3xP0.5,CD,PB,HG	601-A100-004-HA
	39	Washer(8x3.2x1T,NI)	606-Q2221-122-HA
NSP	40	Himilon	
	41	Foot Pad(15x4T)	612-4000-275-HA
	42	Cushion	612-MX200-331-HA
	43	Fibrous(0.5T)	612-4000-433-HA
	44	Fibrous(0.5T)	612-4000-434-HA
	45	Screw(3x5 P=0.5)	602-B300-041-HA
	46	Screw(2.6x8 TTP)	602-SL24F-099-HA
	47	Screw(M2.6x6)	602-KM300-142-HA
	48	Screw(M3xP0.5xL8)	602-HP1010K-178-HA
	49	Screw(M3x8)	602-HMD510B-198-HA
	50	Screw(TTP,2x4,NI)	602-ST150-419-HA
	51	Screw(TTS,3x8,ZB)	602-DCM280-429-HA
	52	Screw	602-DJ5500-452-HA
	53	Screw(TTB,2x5,MC)	602-A700-494-HA
	54	Screw WBTP2.6x8 TTB	602-900-565-HA
	55	Screw SAE1018PTF3x10	602-PTF3010-585-HA
	56	Screw C-1018,2x5mm,m	602-ISOF2005-686B-HA
	57	Screw BTB,3x8,C-1018	602-BTB3008-706B-HA
	58	Screw(BTS,3x8)	602-BTS308-724B-HA
	59	Screw SAE1018 BTB3x5	602-BTB305-727B-HA
NSP	60	Bar Code	
	61	3N2P 3.96 CNCT Wire	404-DJM4000-3700-HA
	62	AC Safety Capacitor	413-S250-747-HA
	63	Core	415-DJM4000-404-HA
	64	Strain Relief Bushin	504-MC6000-275-HA
	65	EVA Cushion	612-DJM4000-438-HA
	66	Wire Mount(FW2-3m)	504-ST100-118-HA
NSP	67	Screw(ISOB,M3x8xP0.5,NI)	
NSP	68	Washer(4.36x8.26x0.9t)	
	69	Spacer EVA	612-390-234-HA
NSP	70	Locking Cable Clip	
	71	20P 1.0 FFC Cable	406-DJM4000-1219-HA
	72	12P 1.0 FFC	406-QFX-896-HA
	73	Segregate Sheet	501-4000-2520-HA
	74	CH VR Board	701-DJM4000-5254-HA
	75	VR Board Assy	701-DJM4000-5255-HA
	76	Front Panel Assy(LXE)	701-4000-5256-HA
		Front Panel Assy(XECN5)	701-4000B-5257-HA
	77	SPACER SUPPORT	504-RMX30-157-HA
	78	HEAT SINK	425-JM4000-174-HA
	79	SCREW(TTB,3*6NI)	602-SA12-377-HA
	80	FIXED PLATE(M3*P0.5)	300-4500-2010A-HA