Pioneer *sound.vision.soul*

Service Manual

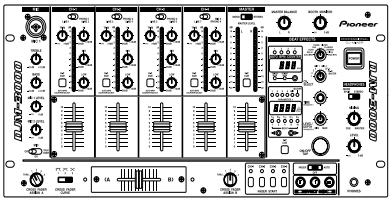

DJM-3000

ORDER NO.
RRV2587

DJ MIXER

DJM-3000

THIS MANUAL IS APPLICABLE TO THE FOLLOWING MODEL(S) AND TYPE(S).

Model	Type	Porew Requirement	The voltage can be converted by the following method.
DJM-3000	KUCXCN	AC120V	
DJM-3000	WYXCN	AC220-240V	
DJM-3000	RLBXCN	AC110-120V/220-240V	With the voltage selector



For details, refer to "Important symbols for good services" on the next page.

PIONEER CORPORATION 4-1, Meguro 1-chome, Meguro-ku, Tokyo 153-8654, Japan
PIONEER ELECTRONICS (USA) INC. P.O. Box 1760, Long Beach, CA 90801-1760, U.S.A.
PIONEER EUROPE NV Haven 1087, Keetberglaan 1, 9120 Melsele, Belgium
PIONEER ELECTRONICS ASIACENTRE PTE. LTD. 253 Alexandra Road, #04-01, Singapore 159936
ⓒ**PIONEER CORPORATION 2002**

T-ZZR APR.2002.printed in Japan

SAFTY INFORMATION

This service manual is intended for qualified service technicians; it is not meant for the casual do-it-yourselfer. Qualified technicians have the necessary test equipment and tools, and have been trained to properly and safely repair complex products such as those covered by this manual.
Improperly performed repairs can adversely affect the safety and reliability of the product and may void the warranty. If you are not qualified to perform the repair of this product properly and safely, you should not risk trying to do so and refer the repair to a qualified service technician.

WARNING

This product contains lead in solder and certain electrical parts contain chemicals which are known to the state of California to cause cancer, birth defects or other reproductive harm.

Health & Safety Code Section 25249.6 – Proposition 65

NOTICE

(FOR CANADIAN MODEL ONLY)

Fuse symbols (fast operating fuse) and/or (slow operating fuse) on PCB indicate that replacement parts must be of identical designation.

REMARQUE

(POUR MODÈLE CANADIEN SEULEMENT)

Les symboles de fusible (fusible de type rapide) et/ou (fusible de type lent) sur CCI indiquent que les pièces de remplacement doivent avoir la même désignation.

(FOR USA MODEL ONLY)

1. SAFETY PRECAUTIONS

The following check should be performed for the continued protection of the customer and service technician.

LEAKAGE CURRENT CHECK

Measure leakage current to a known earth ground (water pipe, conduit, etc.) by connecting a leakage current tester such as Simpson Model 229-2 or equivalent between the earth ground and all exposed metal parts of the appliance (input/output terminals, screwheads, metal overlays, control shaft, etc.). Plug the AC line cord of the appliance directly into a 120V AC 60 Hz outlet and turn the AC power switch on. Any current measured must not exceed 0.5 mA.

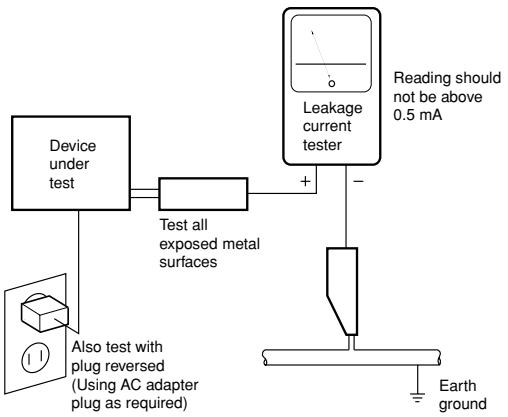

AC Leakage Test

ANY MEASUREMENTS NOT WITHIN THE LIMITS OUTLINED ABOVE ARE INDICATIVE OF A POTENTIAL SHOCK HAZARD AND MUST BE CORRECTED BEFORE RETURNING THE APPLIANCE TO THE CUSTOMER.

2. PRODUCT SAFETY NOTICE

Many electrical and mechanical parts in the appliance have special safety related characteristics. These are often not evident from visual inspection nor the protection afforded by them necessarily can be obtained by using replacement components rated for voltage, wattage, etc. Replacement parts which have these special safety characteristics are identified in this Service Manual.

Electrical components having such features are identified by marking with a ⚠ on the schematics and on the parts list in this Service Manual.

The use of a substitute replacement component which does not have the same safety characteristics as the PIONEER recommended replacement one, shown in the parts list in this Service Manual, may create shock, fire, or other hazards.

Product Safety is continuously under review and new instructions are issued from time to time. For the latest information, always consult the current PIONEER Service Manual. A subscription to, or additional copies of, PIONEER Service Manual may be obtained at a nominal charge from PIONEER.

[Important symbols for good services]

In this manual, the symbols shown-below indicate that adjustments, settings or cleaning should be made securely.
When you find the procedures bearing any of the symbols, be sure to fulfill them:

1. Product safety



You should conform to the regulations governing the product (safety, radio and noise, and other regulations), and should keep the safety during servicing by following the safety instructions described in this manual.

2. Adjustments



To keep the original performances of the product, optimum adjustments or specification confirmation is indispensable. In accordance with the procedures or instructions described in this manual, adjustments should be performed.

3. Cleaning



For optical pickups, tape-deck heads, lenses and mirrors used in projection monitors, and other parts requiring cleaning, proper cleaning should be performed to restore their performances.

4. Shipping mode and shipping screws



To protect the product from damages or failures that may be caused during transit, the shipping mode should be set or the shipping screws should be installed before shipping out in accordance with this manual, if necessary.

5. Lubricants, glues, and replacement parts



Appropriately applying grease or glue can maintain the product performances. But improper lubrication or applying glue may lead to failures or troubles in the product. By following the instructions in this manual, be sure to apply the prescribed grease or glue to proper portions by the appropriate amount.For replacement parts or tools, the prescribed ones should be used.

CONTENTS

SAFTY INFORMATION 2
1. SPECIFICATIONS 5
2. EXPLODED VIEWS AND PARTS LIST 6
2.1 PACKING 6
2.2 EXTERIOR(1/2) SECTION 8
2.3 EXTERIOR(2/2) SECTION 10
3. BLOCK DIAGRAM AND SCHEMATIC DIAGRAM 12
3.1 BLOCK DIAGRAM 12
3.2 OVERALL WIRING CONNECTION DIAGRAM 14
3.3 TERMA(1/3) ASSY 16
3.4 TERMA(2/3) ASSY 18
3.5 TERMA(3/3) ASSY 20
3.6 TERMB(1/4) ASSY 22
3.7 TERMB(2/4) ASSY 24
3.8 TERMB(3/4) ASSY 26
3.9 TERMB(4/4) ASSY 28
3.10 VR(1/8) ASSY 30
3.11 VR(2/8) and HP ASSY 32
3.12 VR(3/8) ASSY 34
3.13 VR(4/8) ASSY 36
3.14 VR(5/8) ASSY 38
3.15 VR(6/8), CF and CFCURV ASSYS ASSY 40
3.16 VR(7/8) ASSY 42
3.17 VR(8/8) ASSY 44
3.18 MAF, CHF1-4 and MIC ASSYS 45
3.19 DSP(1/3) ASSY 46
3.20 DSP(2/3) ASSY 48
3.21 DSP(3/3) ASSY 50
3.22 EFFECT ASSY 52
3.23 LED(1/2) ASSY 54
3.24 LED(2/2) ASSY 56
3.25 REG, POWER, TRANS and PSW ASSYS 58
4. PCB CONNECTION DIAGRAM 66
4.1 CF and MAF ASSYS 67
4.2 TERMA ASSY 68
4.3 TERMB ASSY 70
4.4 VR, CFCURV, MIC, EFFECT and HP ASSYS 72
4.5 DSP ASSY 76
4.6 LED ASSY 80
4.7 REG, POWER, TRANS and PSW ASSYS 84
4.8 CHF1 to CHF4 ASSYS 86
5. PCB PARTS LIST 87
6. ADJUSTMENT 95
7. GENERAL INFORMATION 96
7.1 DIAGNOSIS 96
7.1.1 DISASSEMBLY 98
7.2 PARTS 100
7.2.1 IC 100
7.3 OPTIONAL PARTS 101
8. PANEL FACILITIES 104

1. SPECIFICATIONS

Audio Section

Input terminal (input level/impedance)

PHONO(1-4)	–54dBV (2mV)/47kΩ
MIC 1	–54dBV (2mV)/3kΩ
MIC (2-3)	–60dBV (1mV)/3kΩ
LINE(1-7)	–14dBV (200mV)/22kΩ

Output terminal (output level/impedance)

MASTER OUT1 (RCA)	0dBV (1V)/1kΩ
MASTER OUT2 (XLR)	4dBm (1.23V)/600Ω
REC OUT (RCA)	–10dBV (1V)/1kΩ
BOOTH MONITOR	0dBV (1V)/1kΩ
SEND	–14dBV (1V)/1kΩ
PHONES	0dBV (0.63V)/22Ω
DIGITAL OUT 1(COAXIAL)	0.5V/75Ω
DIGITAL OUT 2(COAXIAL)	0.5V/75Ω

Frequency characteristics

LINE/MIC	20Hz to 20kHz
PHONO(RIAA)	20Hz to 20kHz

SN ratio

LINE	85dB (with effects off)
PHONO	75dB
MIC	64dB

Total harmonic distortion rate

LINE/PHONO	Below 0.02%

Cross talk(1kHz)	Over 70dB

Channel equalizer(LINE/PHONO/MIC3)

HI	+12dB, –26dB (13kHz)
MID	+12dB, –26dB (1kHz)
LOW	+12dB, –26dB (70Hz)

Microphone equalizer(MIC1, 2)

TREBLE	+12dB, –12dB (10kHz)
BASS	+12dB, –12dB (100Hz)

Effector

DELAY and ECHO	1 to 3500mSec
PAN, TRANS, FILTER and FLANGER	10 to 16000mSec
REVERB	1 to 100%
PITCH	0 to ±100%

Electrical Section, etc.

Power supply voltage

KUC model	AC 120V, 60Hz
WY model	AC 220- 240V 50/60Hz
RLB model	AC 110-120V/220-240V 50/60Hz

Power Consumption

KUC model	41W
WY model	48W
RLB model	49W

Operating temperature	+5˚C to +35˚C
Operating humidity	5% to 85%
External dimensions	482 (W) x220 (D) x 107 (H) mm
Weight (without package)	6.7kg

Accessories Parts

Short-circuit pin plug	2
Operating instruction	1
Warranty	1

Note

Specifications and the design are subject to possible modifications without notice, due to improvements.

2. EXPLODED VIEWS AND PARTS LIST

NOTES:
- *Parts marked by "NSP" are generally unavailable because they are not in our Master Spare Parts List.*
- *The ⚠ mark found on some component parts indicates the importance of the safety factor of the part. Therefore, when replacing, be sure to use parts of identical designation.*
- *Screws adjacent to ▼ mark on product are used for disassembly.*
- *For the applying amount of lubricants or glue, follow the instructions in this manual. (In the case of no amount instructions, apply as you think it appropriate.)*

2.1 PACKING

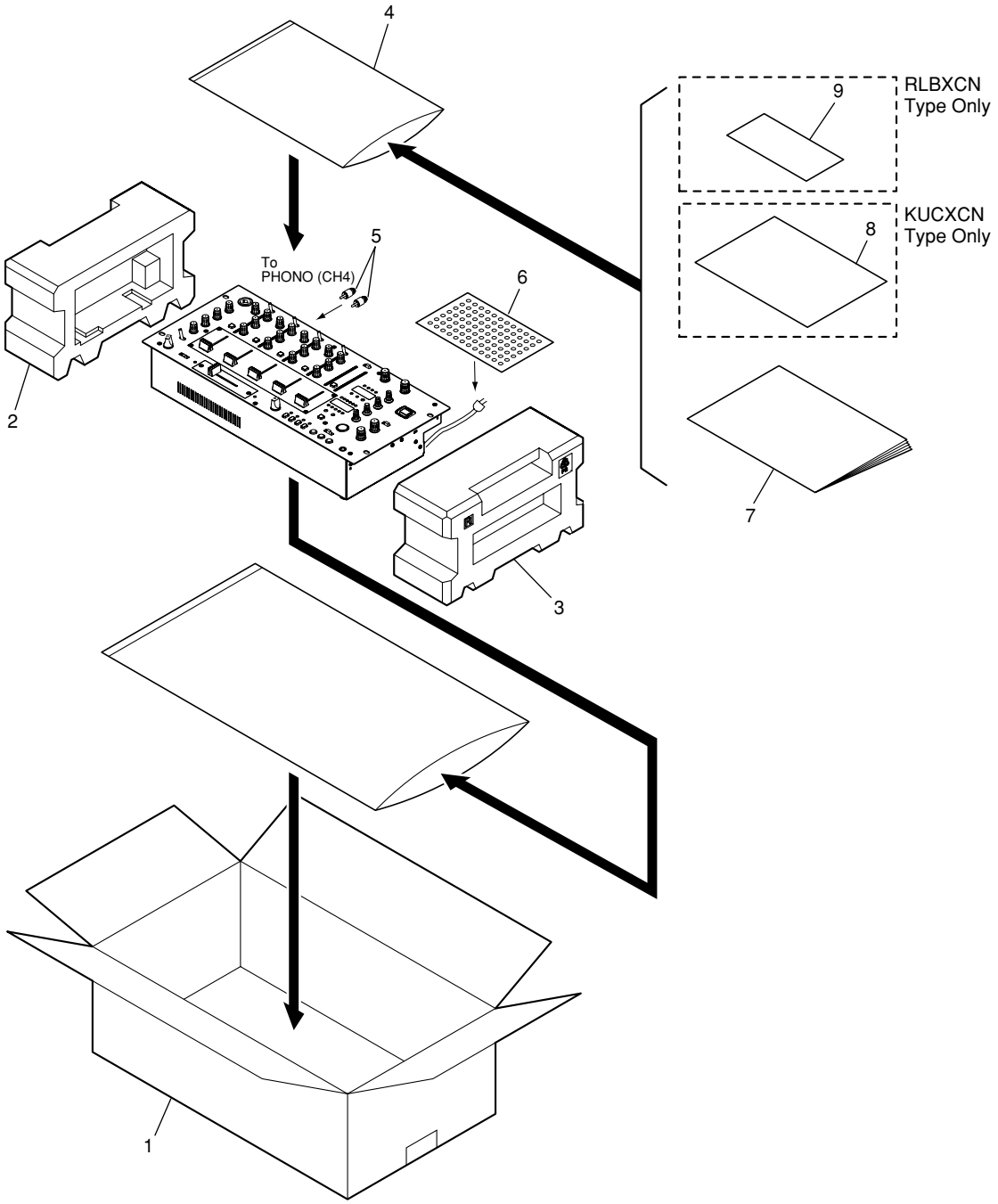

PACKING parts List

Mark	No.	Description	Part No.
	1	Packing Case	See Contrast table(2)
	2	Packing L	222302090
	3	Packing R	222302100
	4	Polyethylene Bag (340 x 230 x 0.05)	222402210
	5	Short Pin Plug	AKM7008
	6	Air Cap Sheet	222402260
	7	Operating Instructions	See Contrast table(2)
NSP	8	Warranty Card	See Contrast table(2)
NSP	9	Caution Card 220V	See Contrast table(2)

(2) CONTRAST TABLE

DJM-3000/KUCXCN, RLBXCN and WYXCN type are constructed the same except for the following :

Mark	NO	Symbol and Description	DJM-3000/ KUCXCN	DJM-3000/ RLBXCN	DJM-3000/ WYXCN
	1	Packing Case	222302120	222302110	222302070
	7	Operating Instructions (English/ French)	DRB1314	Not used	Not used
	7	Operating Instructions (English/ Spanish/ Chinese)	Not used	DRB1316	Not used
	7	Operating Instructions (English/ French/ German/ Italian/ Dutch/ Spanish)	Not used	Not used	DRB1315
NSP	8	Warranty Card	ARY7043	Not used	Not used
NSP	9	Caution Card 220V	Not used	ARR7003	Not used

2.2 EXTERIOR(1/2) SECTION

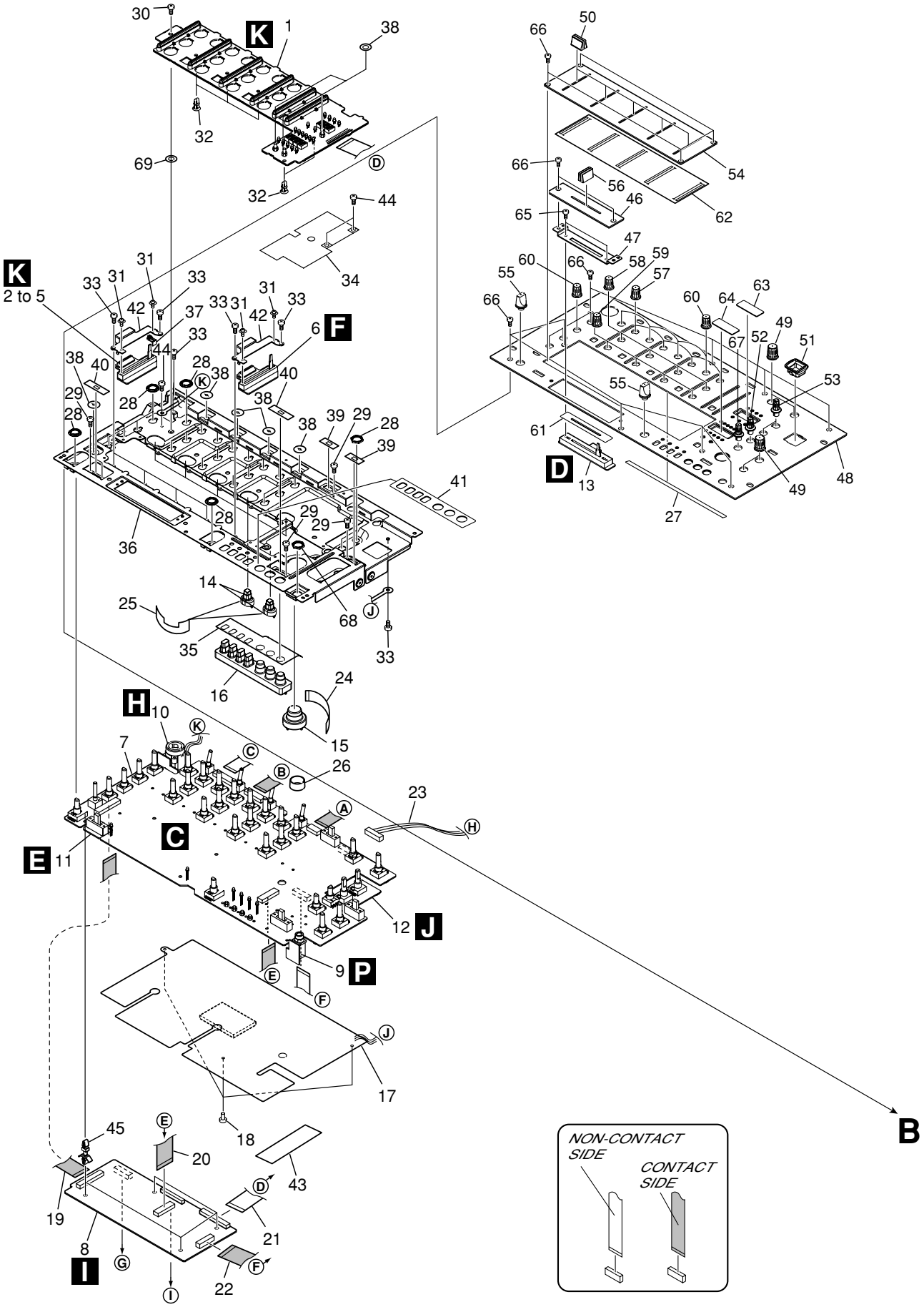

EXTERIOR(1/2) SECTION parts List

Mark	No.	Description	Part No.
	1	LED Assy	226902720
	2	CHF1 Assy	226902860CH1
	3	CHF2 Assy	226902860CH2
	4	CHF3 Assy	226902860CH3
	5	HF4 Assy	226902860CH4
	6	MAF Assy	226902940
	7	VR Assy	226903690
	8		DSP Assy226902640
	9	HP Assy	226902760
	10	MIC Assy	226902780
	11	CFCURV Assy	226903700
	12	EFFECT Assy	226902740
	13	CF Assy	226902960
	14	Rubber Key CUE	224301330
	15	Rubber Key TAP	224301340
	16	Rubber Key LONG	224301360
	17	PCB Sheet VR Assy	225300500
	18	Plastic Rivet	DEC1405
	19	FFC Cable 28P	226404733
	20	FFC Cable 21P	226404735
	21	FFC Cable 35P	226404742
	22	FFC Cable 31P	226404744
	23	Connector Assy	DKP3336
	24	Blind Sheet TAP	225401850
	25	Blind Sheet CUE	225401900
	26	Rubber Holder	225401890
	27	Brind Sheet	225402010
	28	Nut M9	DBN1004
	29	Screw	AMZ26P040FMC
	30	Screw	VBA1039
	31	Screw	DBA1141
NSP	32	PCB Holder	PNW1861
	33	Screw	BBZ30P060FMC
	34	Shield Plate	225401840
	35	Long Packing	225401730

Mark	No.	Description	Part No.
NSP	36	Panel Stay	224100480
	37	Detect Arm	DNK3750
	38	Lever SW Packing	DED1120
	39	Slide SW Packing B	DED1125
	40	SW Packing A	DED1145
	41	Lock Sheet	225402000
	42	Fader Bracket	225401690
	43	Sheet 120 x 30	DED1160
	44	Screw	IBZ30P060FMC
NSP	45	PCB Holder	PNW2174
	46	Slider Panel	224402210
	47	Slider Fitting Board	DNF1518
	48	Control Panel	224100460
	49	Rotary VR Knob B	DAA1136
	50	Fader Knob	DAC1846
	51	Power Knob Guide	DNK3207
	52	Rotary Knob	224301310
	53	Effect SW Knob	224301510
	54	Sub Panel	224301280
	55	Rotary SW Knob	224301350
	56	Cross Fader Knob	224402230
	57	VR Knob GR	224402260
	58	VR Knob GY	224402270
	59	VR Knob GG	224402280
	60	VR Knob BK	224301300
	61	Fader Packing B	DED1100
	62	Fader Packing	225300460
	63	Display Panel A	DAH2097
	64	Display Panel B	DAH2096
	65	Screw	AMZ30P040FMC
	66	Screw	CBZ30P080FZK
	67	Select Knob	224301320
	68	Nut	NKX2FUC
	69	Rubber Fwt	234404450

2.3 EXTERIOR(2/2) SECTION

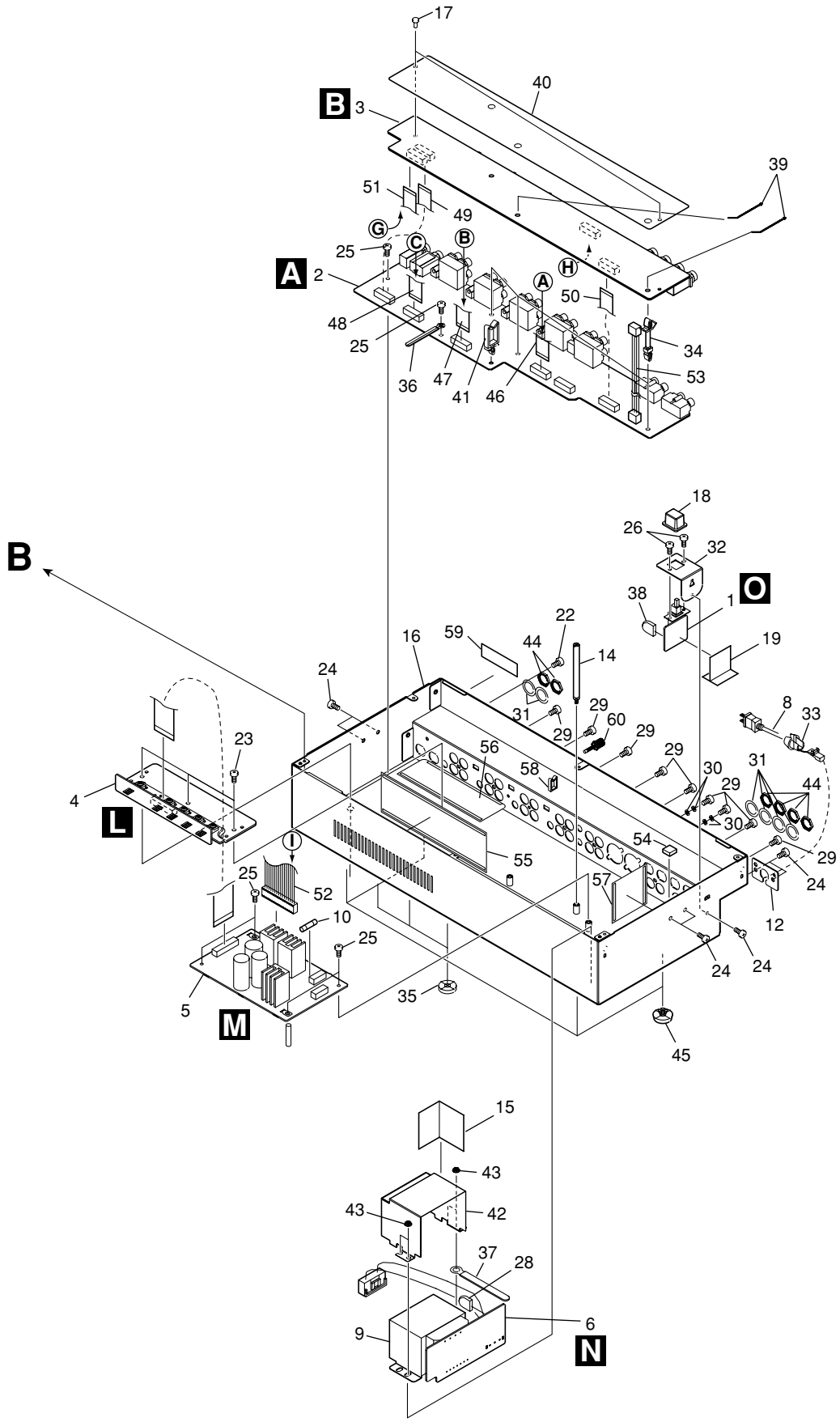

EXTERIOR(2/2) SECTION parts List

Mark	No.	Description	Part No.
	1	PSW Assy	226902820
	2	TERMA Assy	226902660
	3	TERMB Assy	226902680
	4	REG Assy	226902840
	5	POWER Assy	See Contrast table (2)
	6	TRANS Assy	See Contrast table (2)
	7	• • • • •	
⚠	8	Power Cord	See Contrast table (2)
⚠	9	Power Transformer	See Contrast table (2)
⚠	10	Fuse (1A)	See Contrast table (2)
	11	• • • • •	
	12	Power Cord Fitting Board	DNF1640
	13	• • • • •	
	14	Stand	225401830
	15	Insulation Sheet L	225401990
NSP	16	Chassis	224301490
	17	Nyron Rivet 3 x 4.5	RBM-003
	18	Power Knob	DAC1847
	19	SW Insulaton Sheet	225402040
	20	• • • • •	
	21	Sheet	RHX1006
	22	Screw	PMB30P060FZK
	23	Screw	BBZ30P060FMC
	24	Screw	BBZ30P060FZK
	25	Screw	BMZ30P060FMC
	26	Screw	AMZ30P040FMC
	27	Screw	AMZ26P040FMC
	28	Capacitor Cover 16	See Contrast table (2)
	29	Screw	BPZ30P080FZK
	30	Washer	DEC2484
	31	Washer	DBE1010
	32	SW Plate	225401630
	33	Cord Stopper	See Contrast table (2)
NSP	34	PCB Support	REC1248
	35	Screw Guard	224402350
	36	Clamper	RNH-184
	37	Wire Clamper	RNH1005
	38	Capacitor Cover 12.5	See Contrast table (2)
	39	Binder	ZCA-SKB90BK
	40	PCB Sheet Rear	225300470
NSP	41	Wire Clip	DEC1410
	42	Trans. Shield	225300490
	43	Nut M4	225401910
	44	Nut	NKX2FUC
	45	Foot Assy	REC-434
	46	FFC Cable 12P	226404730
	47	FFC Cable 19P	226404731
	48	FFC Cable 24P	226404732
	49	FFC Cable 21P	226404740
	50	FFC Cable 15P	226404741
	51	FFC Cable 20P	226404745
	52	Connector Assy	DKP3570
	53	Connector Assy -DIG	226404650
	54	Rubber Spacer	225401940
	55	Net A	225401950
	56	Net B	225401960
	57	Insulation Sheet	225401970
NSP	58	Mini Clamp	VEC1312
NSP	59	Serial Label	See Contrast table (2)
	60	Earth Terminal	AKE-03

(2) CONTRAST TABLE

DJM-3000/KUCXCN, RLBXCN and WYXCN type are constructed the same except for the following :

Mark	NO	Symbol and Description	DJM-3000/ KUCXCN	DJM-3000/ RLBXCN	DJM-3000/ WYXCN
	5	POWER Assy	226903790	226902700	226902700
	6	TRANS Assy	226902800	226902801	226902800
⚠	8	Power Cord	ADG7024	VDG1061	VDG1061
⚠	9	Power Transformer	927001510	927001500	927001490
⚠	10	Fuse (1A)	REK1075	Not used	Not used
⚠	10	Fuse (T500MA)	Not used	AEK1051	AEK1051
NSP	16	Chassis	224301480	224301470	224301460
	33	Cord Stopper	CM-22C	CM-22B	CM-22B
	28	Capacitor Cover 16	Not used	VEC1912	VEC1912
NSP	59	Serial Label	DRW1871	RRW-168	RRW-168
	38	Capacitor Cover 12.5	Not used	225500120	225500120

3. BLOCK DIAGRAM AND SCHEMATIC DIAGRAM

3.1 BLOCK DIAGRAM

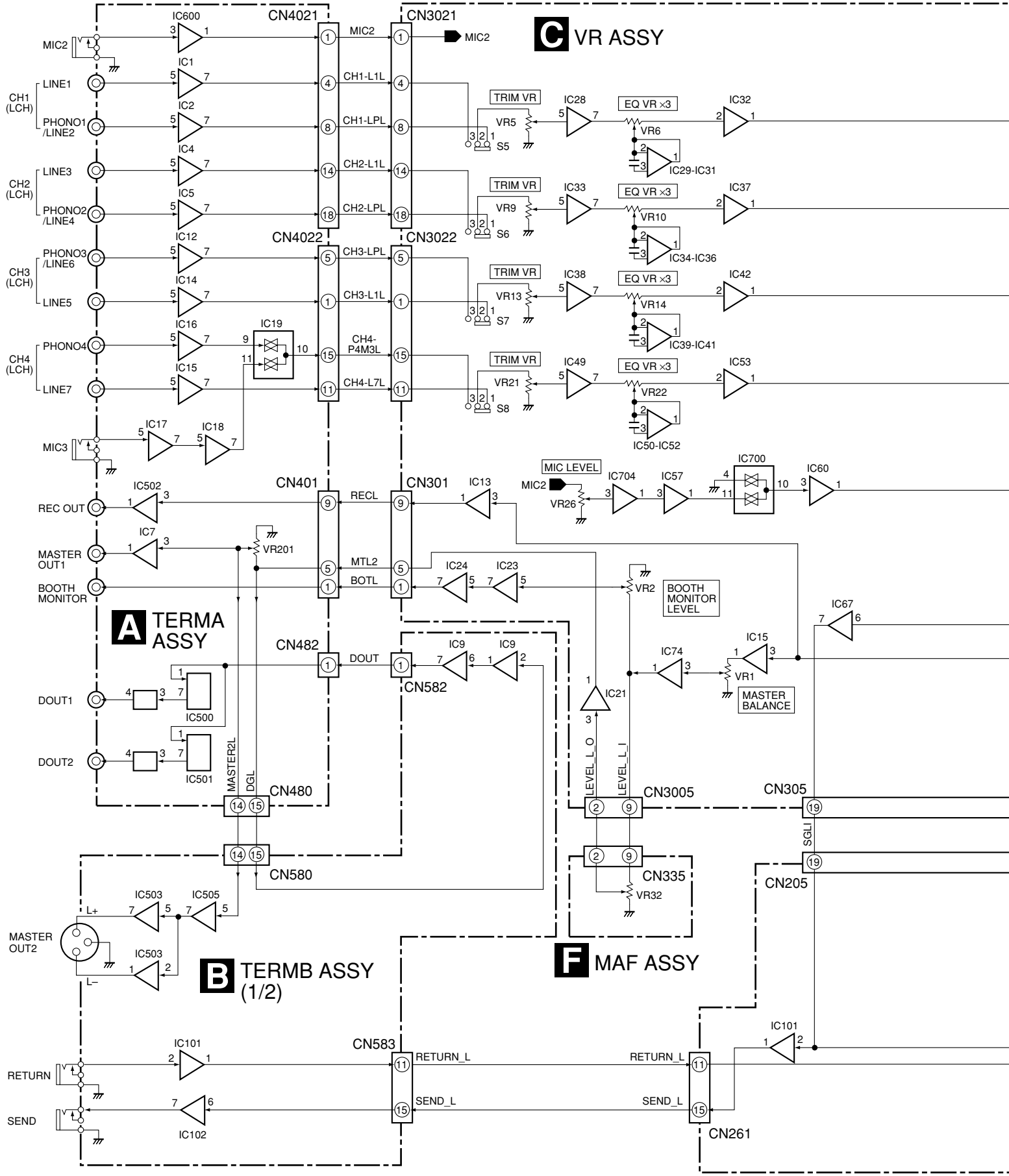

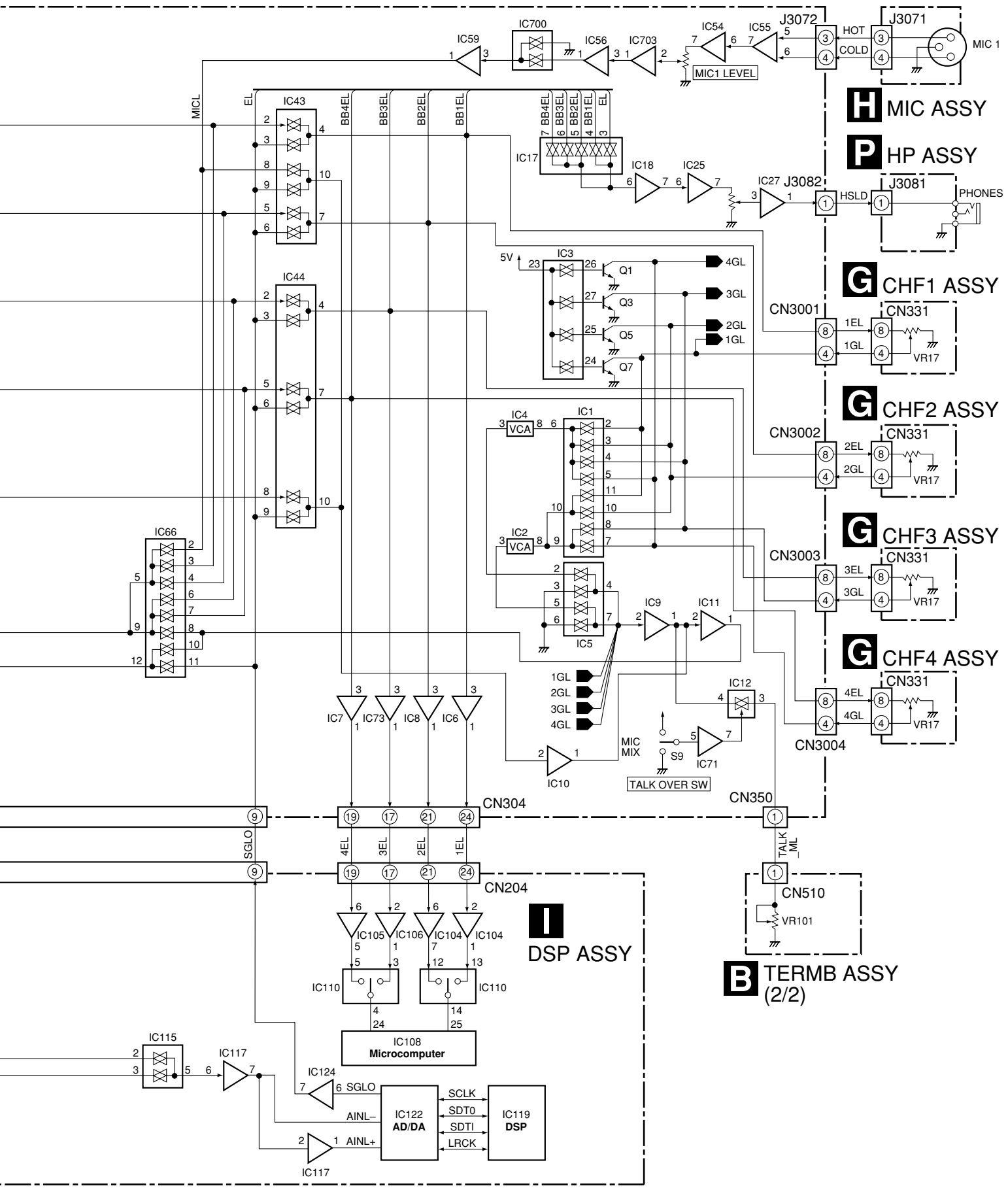
IC700
IC59
IC56
IC703
IC54
IC55
J3072
HOT
COLD
J3071
MIC 1
MIC1 LEVEL
H MIC ASSY
P HP ASSY
IC17
IC18
IC25
IC27
J3082
J3081
HSLD
PHONES
MICL
EL
IC43
IC44
BB4EL
BB3EL
BB2EL
BB1EL
IC3
5V
Q1
Q3
Q5
Q7
4GL
3GL
2GL
1GL
G CHF1 ASSY
CN3001
CN331
1EL
1GL
VR17
IC4
VCA
IC1
IC2
G CHF2 ASSY
CN3002
2EL
2GL
IC66
IC5
IC9
IC11
G CHF3 ASSY
CN3003
3EL
3GL
IC7
IC73
IC8
IC6
IC12
IC10
MIC MIX
S9
IC71
TALK OVER SW
G CHF4 ASSY
CN3004
4EL
4GL
CN304
CN350
SGLO
TALK_ML
CN204
CN510
VR101
IC105
IC106
IC104
IC110
I DSP ASSY
B TERMB ASSY (2/2)
IC115
IC117
IC124
IC108
Microcomputer
IC122
AD/DA
IC119
DSP
SCLK
SDT0
SDTI
LRCK
AINL–
AINL+

3.2 OVERALL WIRING CONNECTION DIAGRAM

Note : When ordering service parts, be sure to refer to "EXPLODED VIEWS and PARTS LIST" or "PCB PARTS LIST".

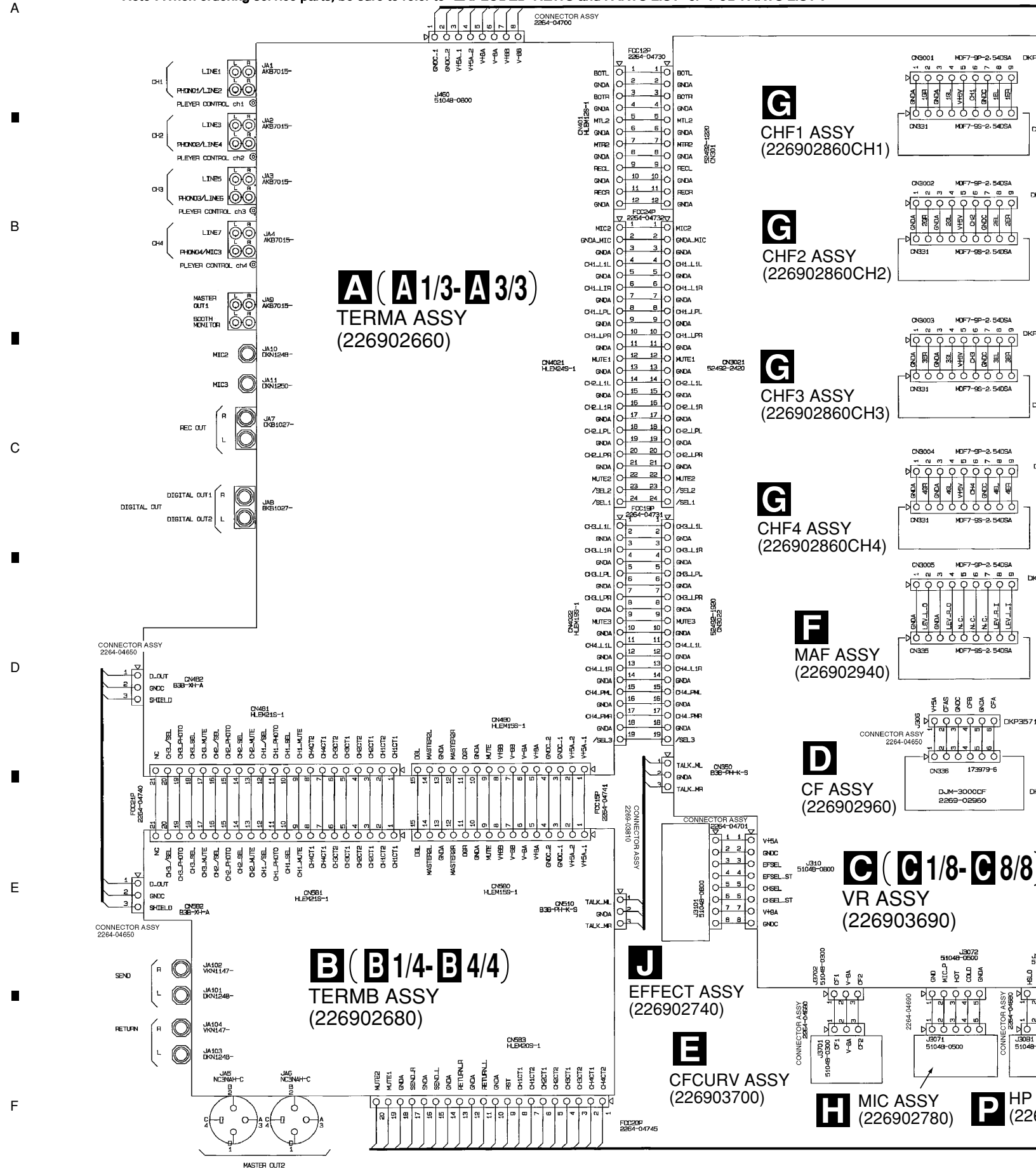

LIST".

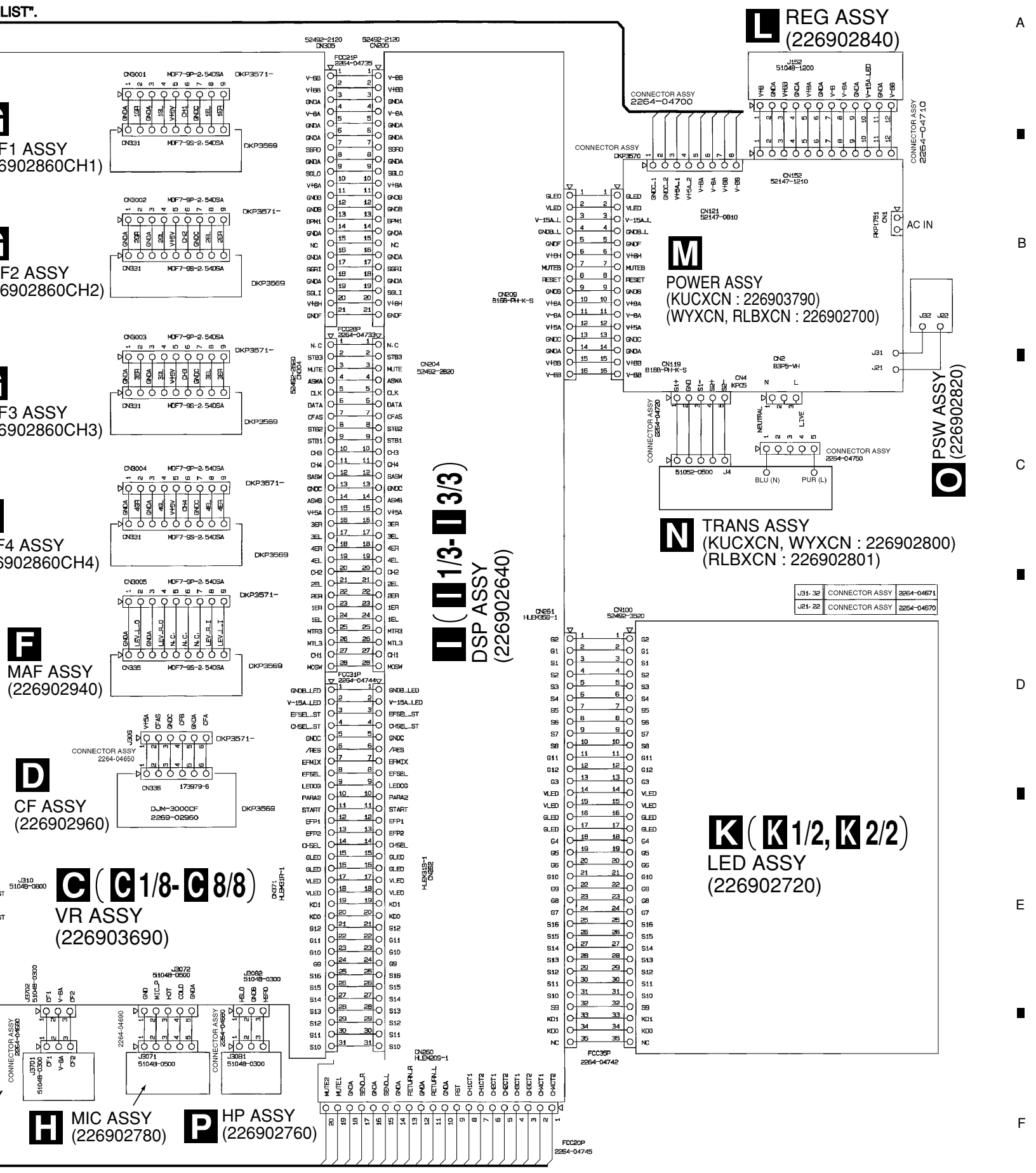
L REG ASSY (226902840)
M POWER ASSY (KUCXCN : 226903790) (WYXCN, RLBXCN : 226902700)
O PSW ASSY (226902820)
N TRANS ASSY (KUCXCN, WYXCN : 226902800) (RLBXCN : 226902801)
I (I 1/3-I 3/3) DSP ASSY (226902640)
K (K 1/2, K 2/2) LED ASSY (226902720)
C (C 1/8-C 8/8) VR ASSY (226903690)
F MAF ASSY (226902940)
D CF ASSY (226902960)
H MIC ASSY (226902780)
P HP ASSY (226902760)
F1 ASSY (6902860CH1)
F2 ASSY (6902860CH2)
F3 ASSY (6902860CH3)
F4 ASSY (6902860CH4)
CONNECTOR ASSY 2264-04700
CONNECTOR ASSY 2264-04710
CONNECTOR ASSY 2264-04720
CONNECTOR ASSY 2264-04750
CONNECTOR ASSY 2264-04650
CONNECTOR ASSY 2264-04690
AC IN
BLU (N)
PUR (L)
NEUTRAL
LIVE
J31, 32 CONNECTOR ASSY 2264-04671
J21, 22 CONNECTOR ASSY 2264-04670

3.3 TERMA(1/3) ASSY

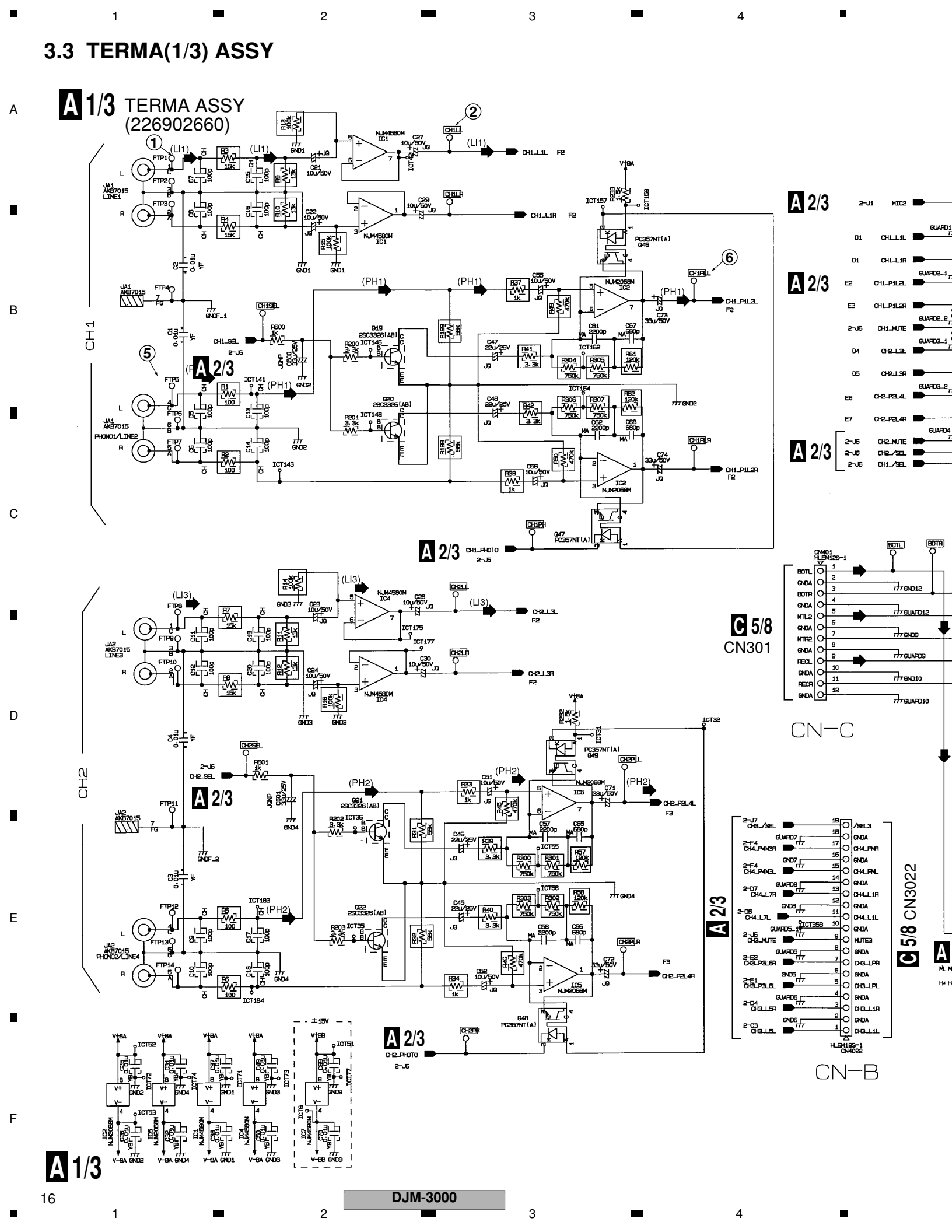

: The power supply is shown with the marked box.

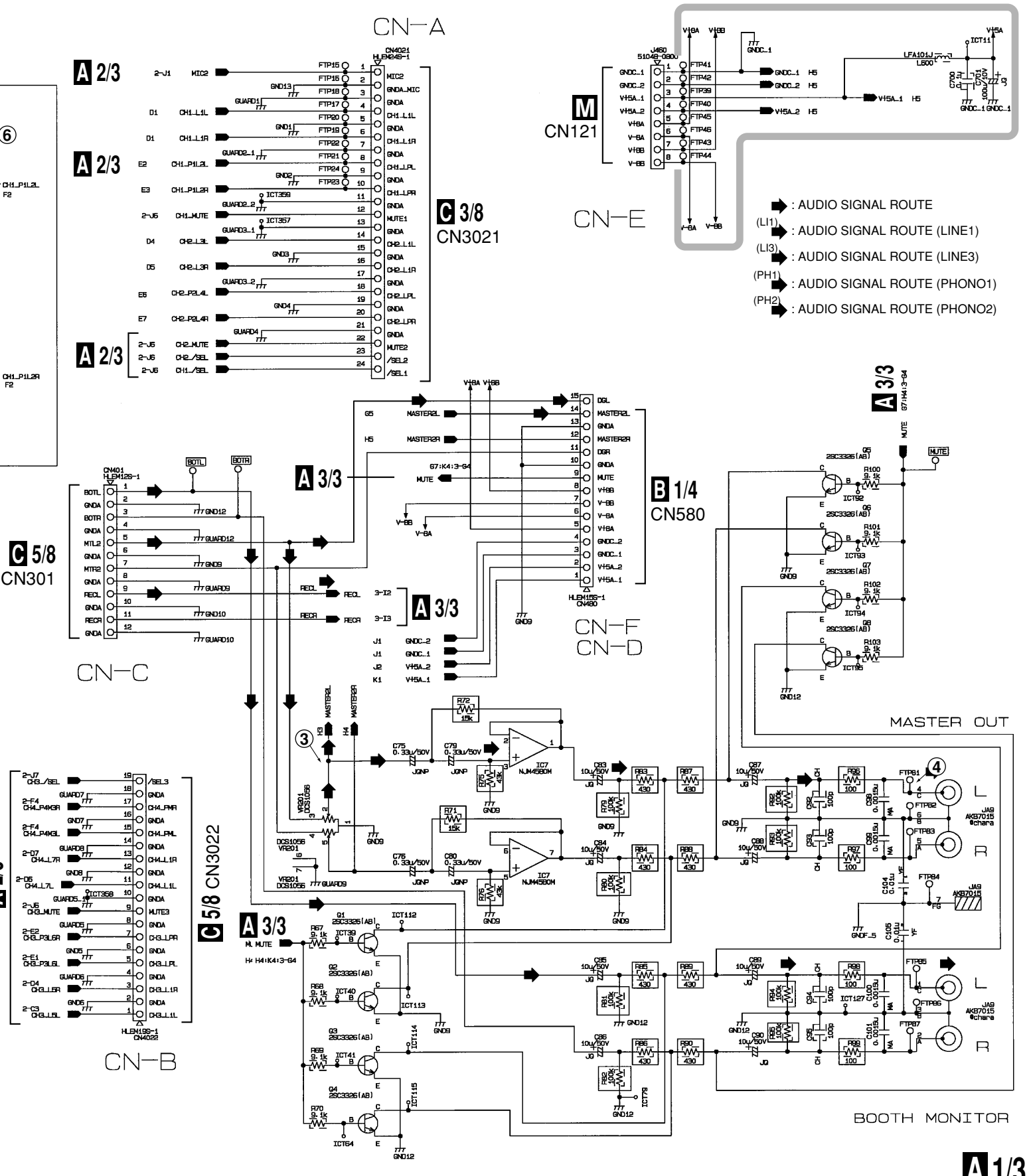

3.4 TERMA(2/3) ASSY

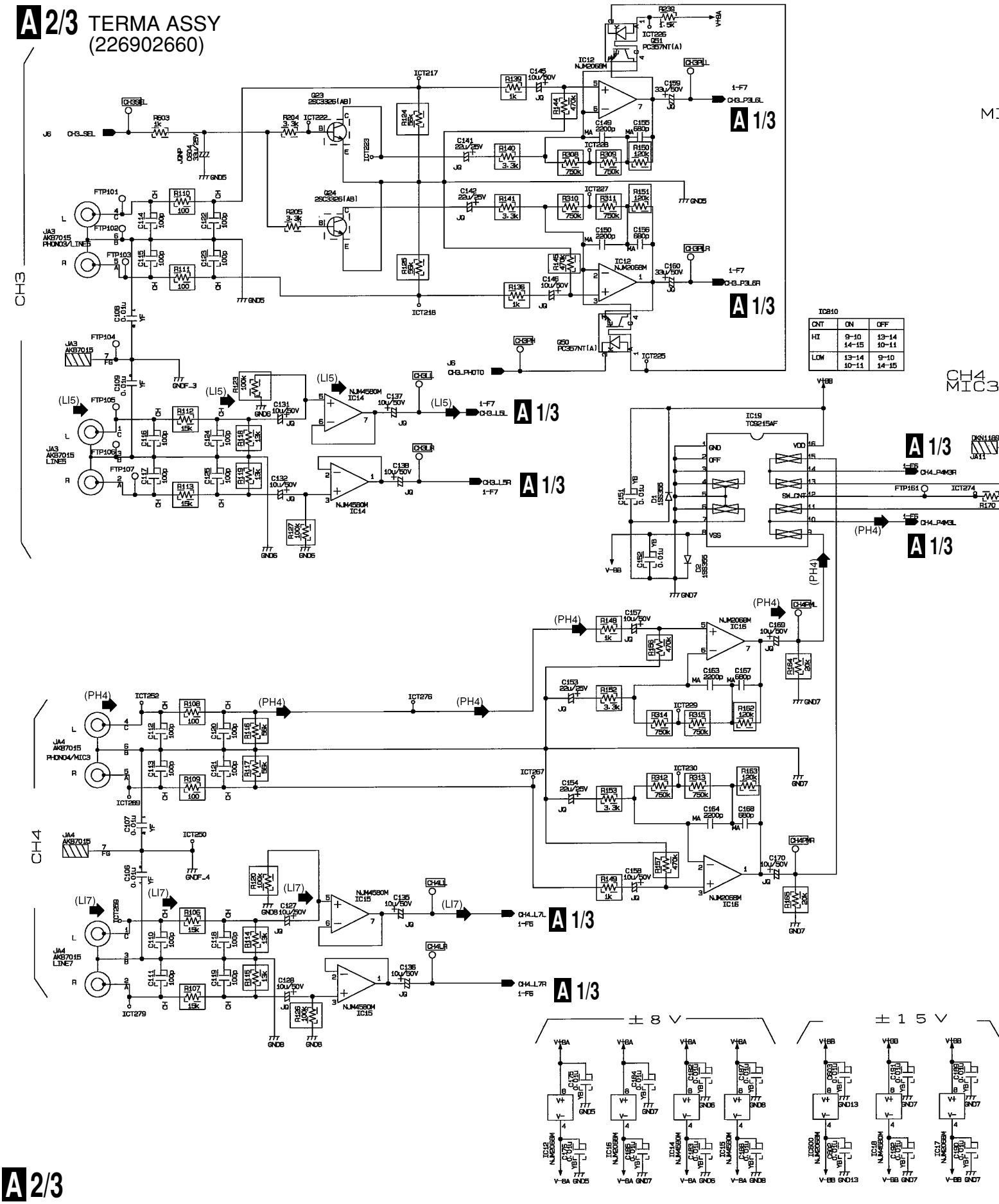

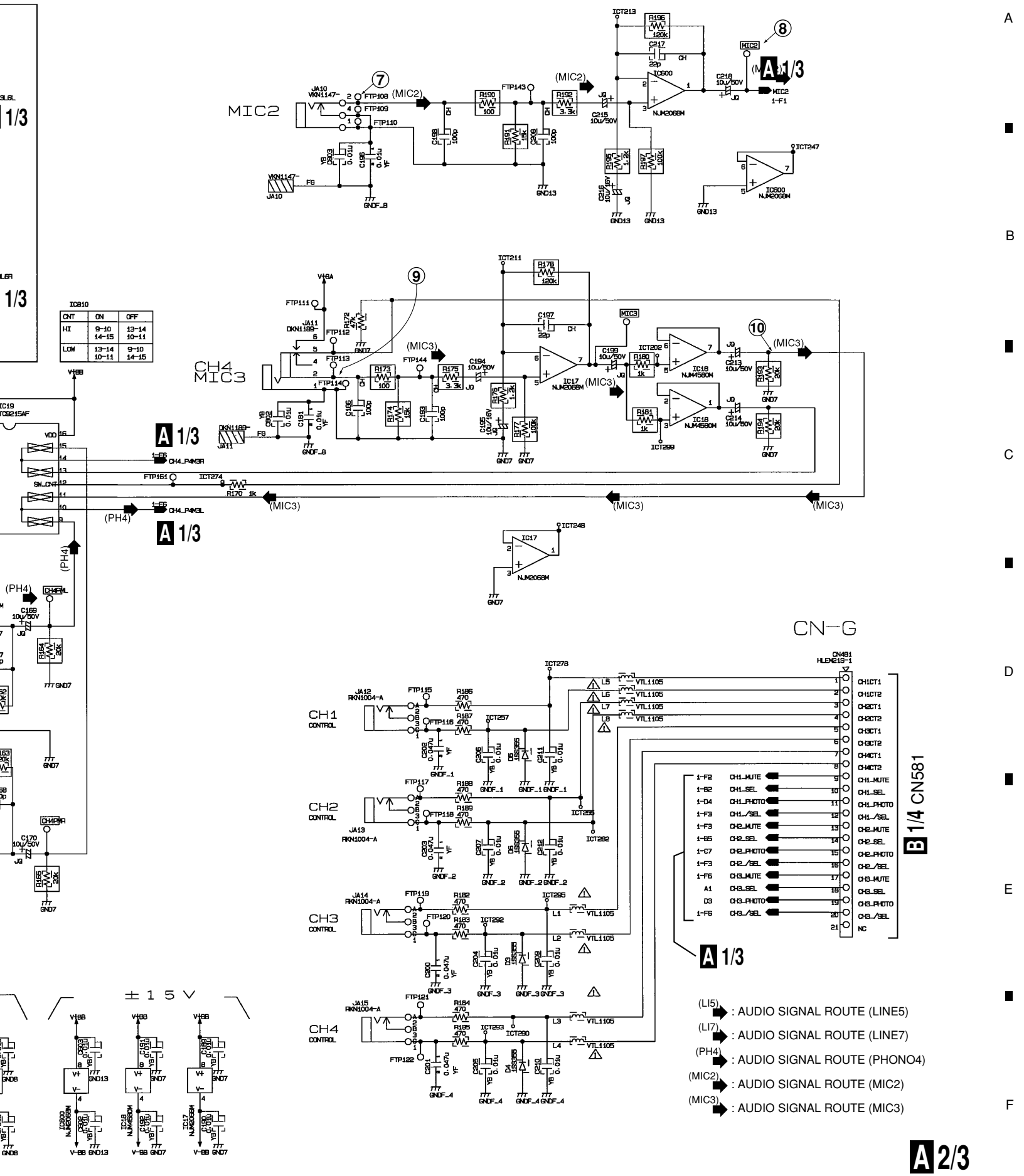
MIC2
CH4
MIC3
CH1
CONTROL
CH2
CONTROL
CH3
CONTROL
CH4
CONTROL
CN-G
B 1/4 CN581
A 1/3
A 2/3
±15V
(LI5) : AUDIO SIGNAL ROUTE (LINE5)
(LI7) : AUDIO SIGNAL ROUTE (LINE7)
(PH4) : AUDIO SIGNAL ROUTE (PHONO4)
(MIC2) : AUDIO SIGNAL ROUTE (MIC2)
(MIC3) : AUDIO SIGNAL ROUTE (MIC3)

3.5 TERMA(3/3) ASSY

A 3/3 TERMA ASSY (226902660)

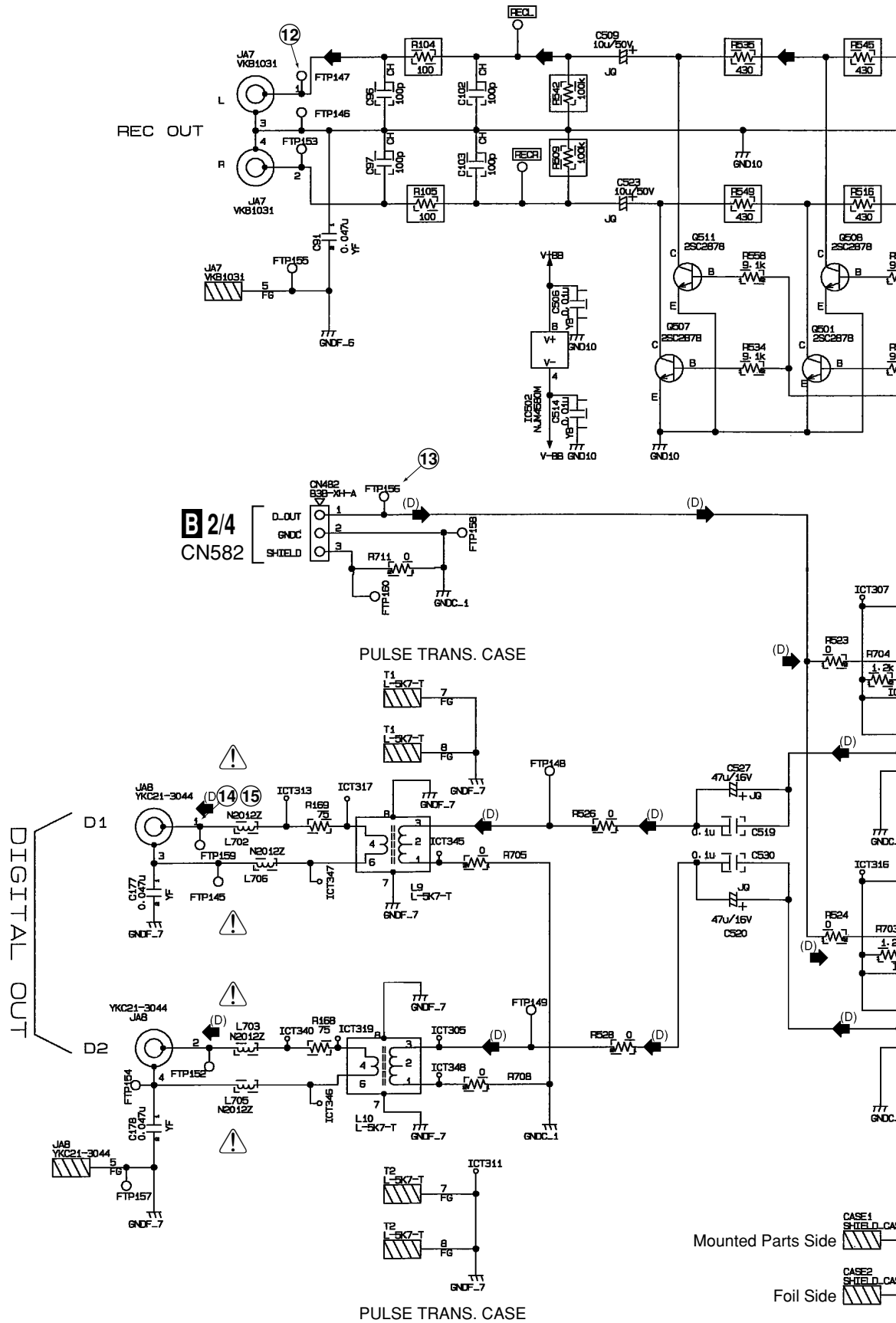

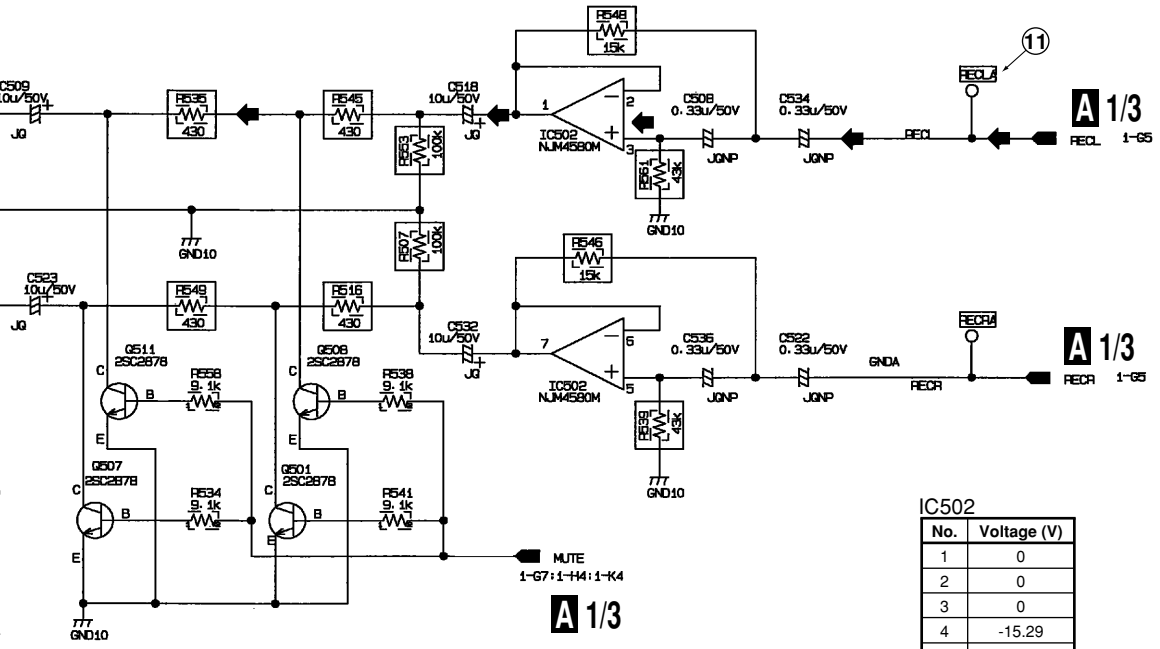

IC502

No.	Voltage (V)
1	0
2	0
3	0
4	-15.29
5	0
6	0
7	0
8	14.96

IC500

No.	Voltage (V)
1	2.38
2	2.57
3	2.55
4	2.51
5	2.55
6	2.51
7	0
8	5.01
9	0
10	2.51
11	2.55
12	2.51
13	2.55
14	5.01

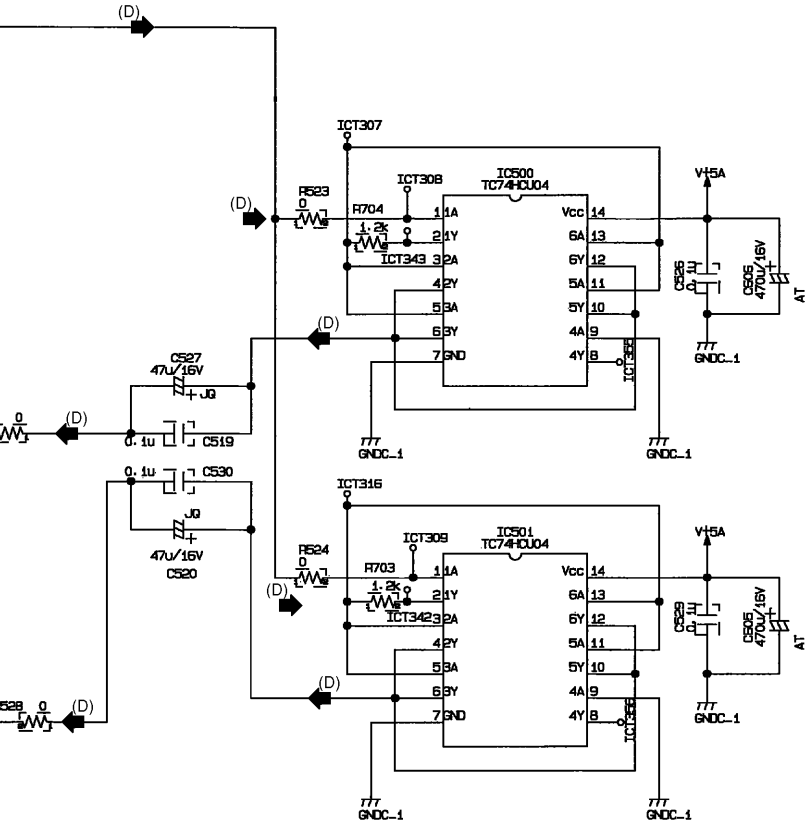

: AUDIO SIGNAL ROUTE

(D) : AUDIO SIGNAL ROUTE (DOUT)

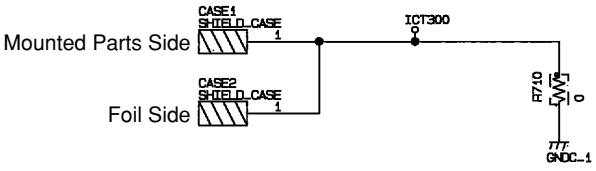

A 3/3

3.6 TERMB(1/4) ASSY

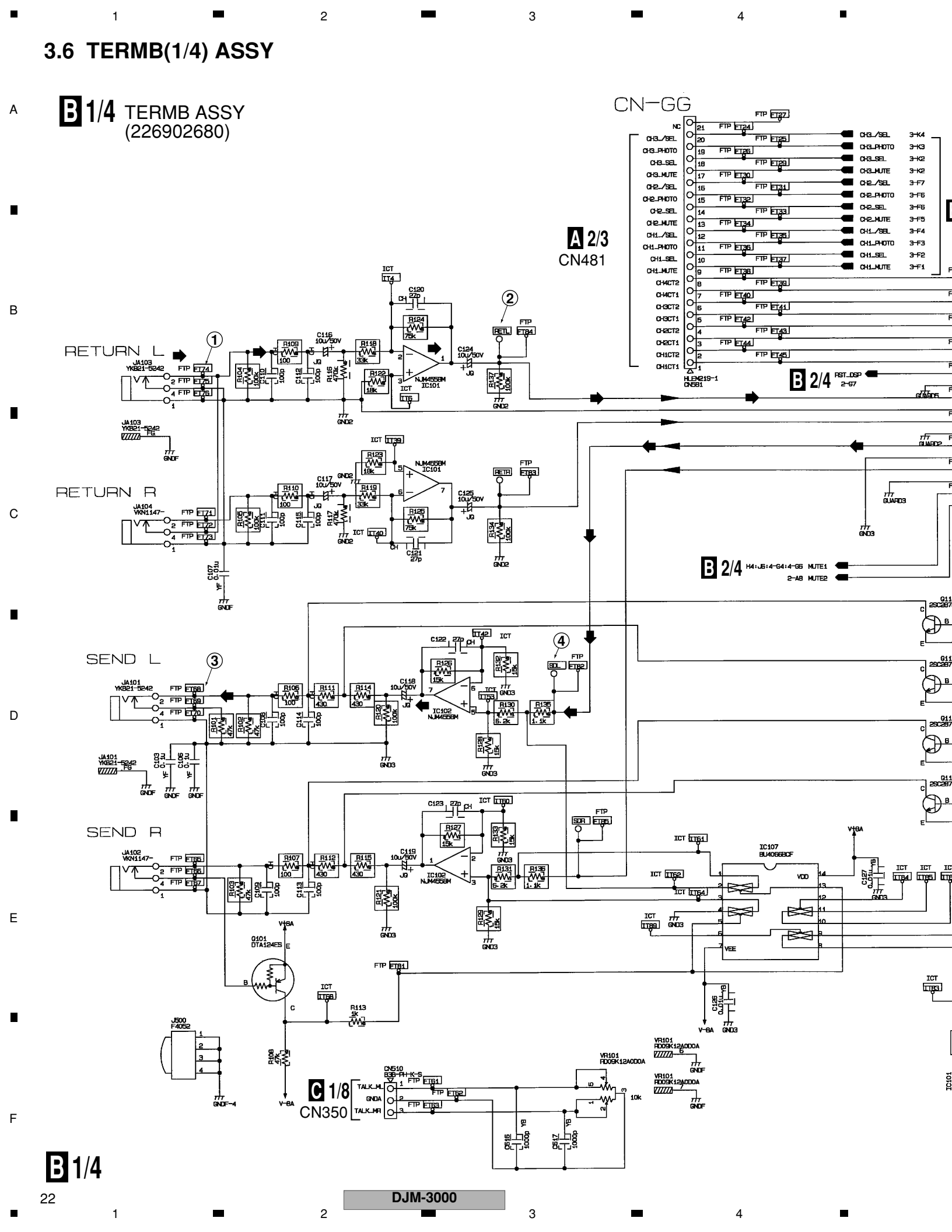

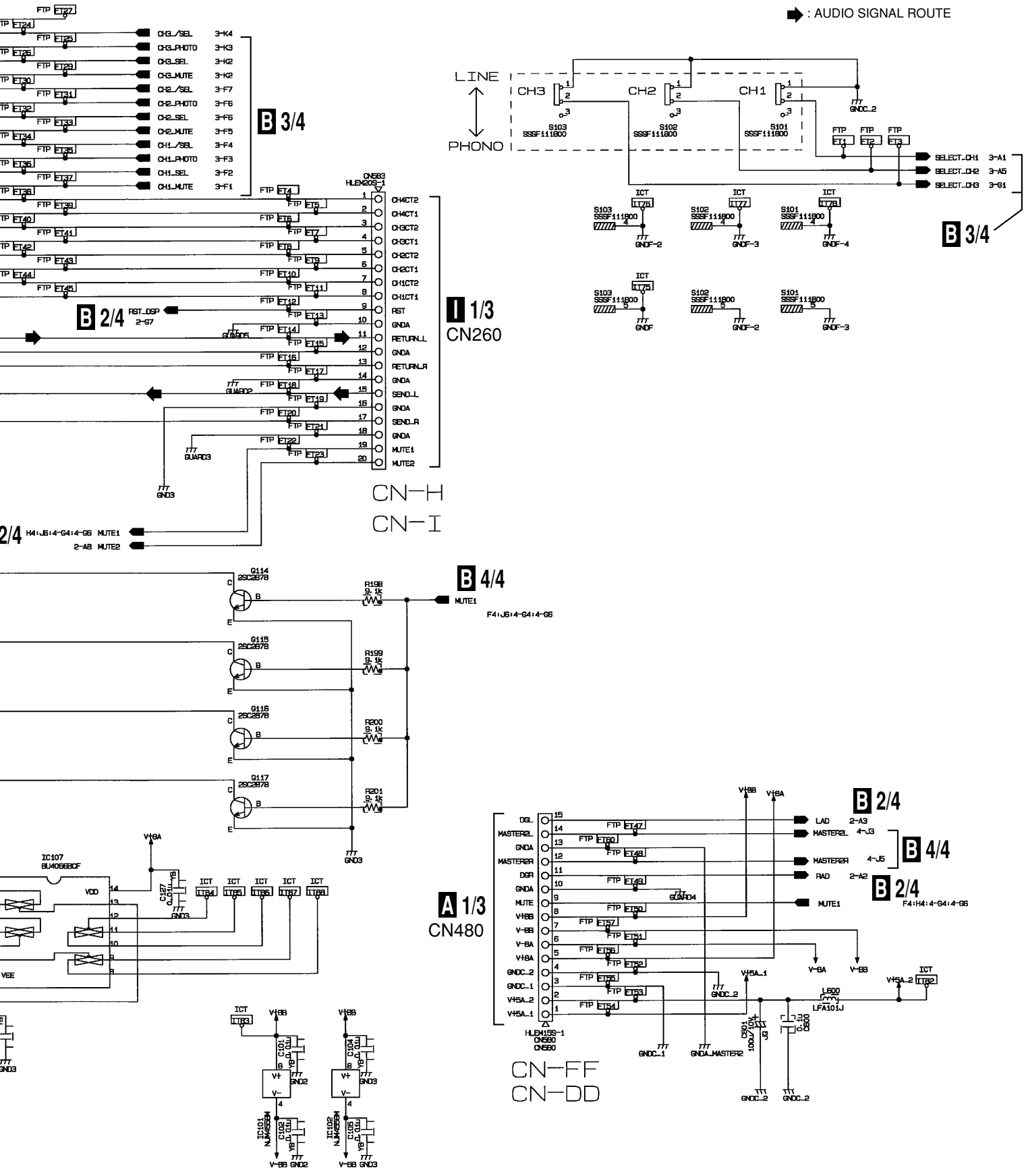
: AUDIO SIGNAL ROUTE
LINE
PHONO
CH3
CH2
CH1
B 3/4
B 2/4
I 1/3
CN260
CN-H
CN-I
B 4/4
A 1/3
CN480
B 2/4
B 4/4
B 2/4
CN-FF
CN-DD
B 1/4

3.7 TERMB(2/4) ASSY

B 2/4 TERMB ASSY (226902680)

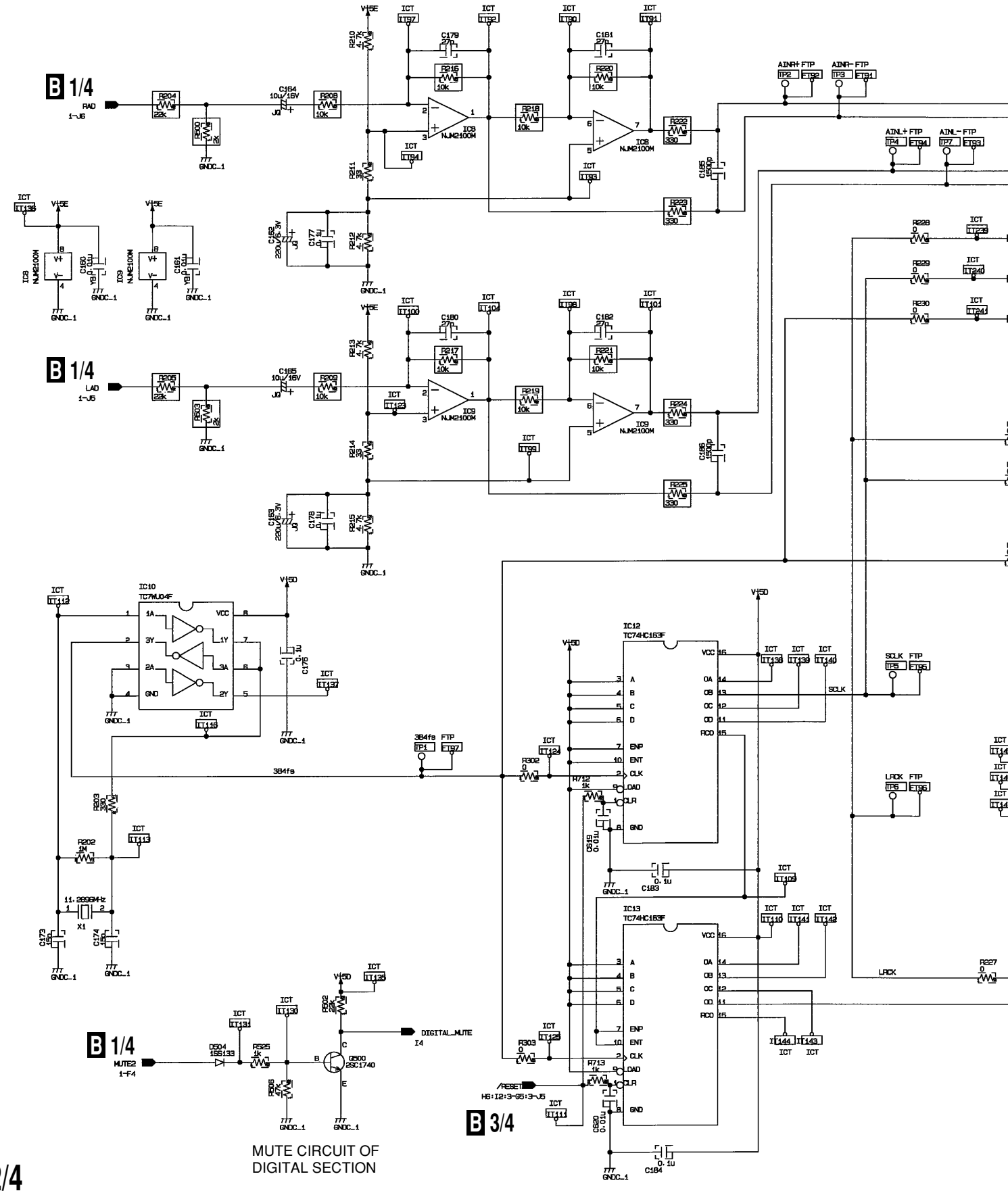

B 2/4

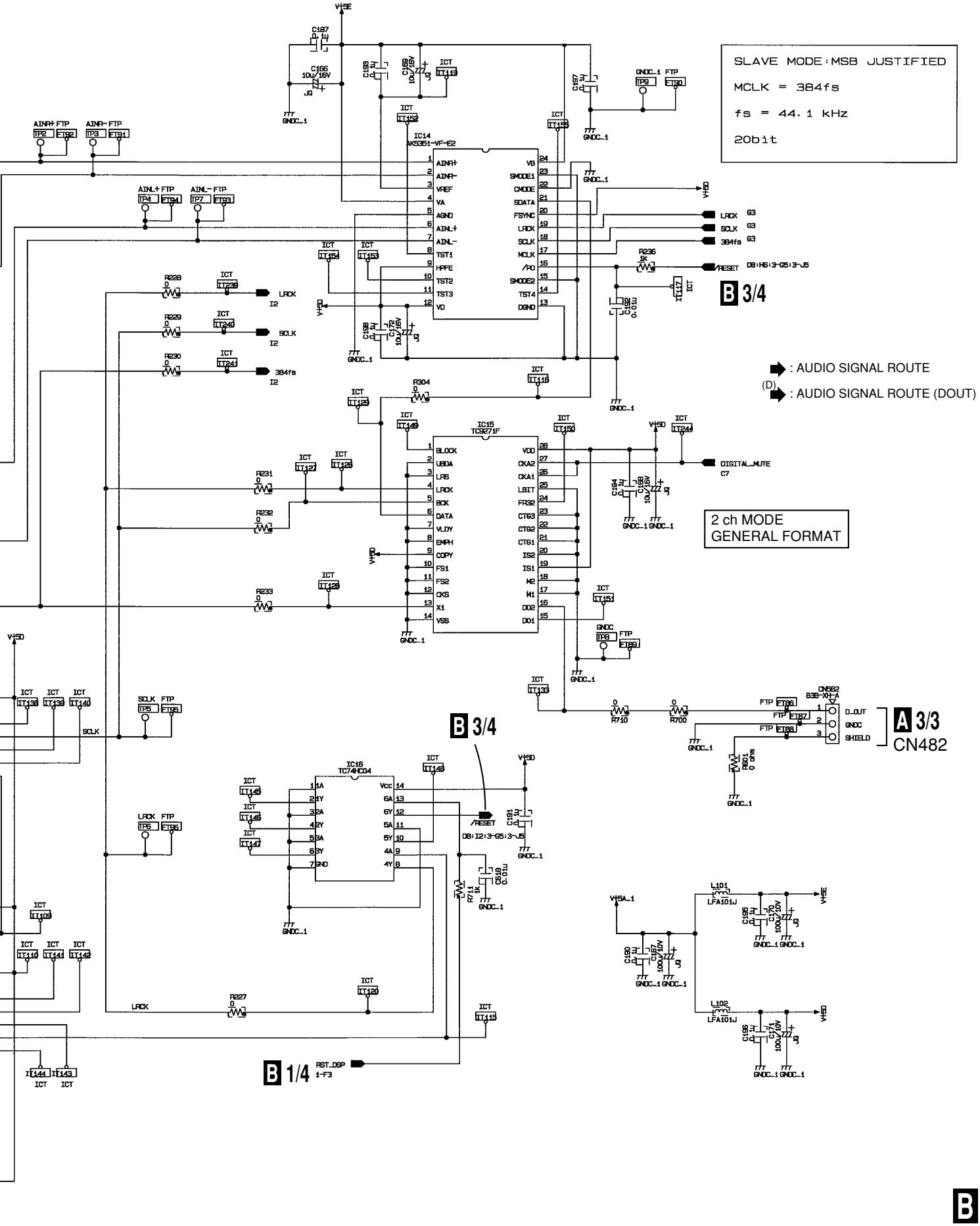
SLAVE MODE:MSB JUSTIFIED
MCLK = 384fs
fs = 44.1 kHz
20bit
IC14 AK5351-VF-E2
IC15 TC9271F
IC16 TC74HC04
: AUDIO SIGNAL ROUTE
(D) : AUDIO SIGNAL ROUTE (DOUT)
2 ch MODE
GENERAL FORMAT
B 3/4
A 3/3
CN482
B 1/4
B 2/4
LRCK
SCLK
384fs
/RESET
DIGITAL_MUTE
RST_DSP
D_OUT
GNDC
SHIELD

3.8 TERMB(3/4) ASSY

B 3/4 TERMB ASSY
(226902680)

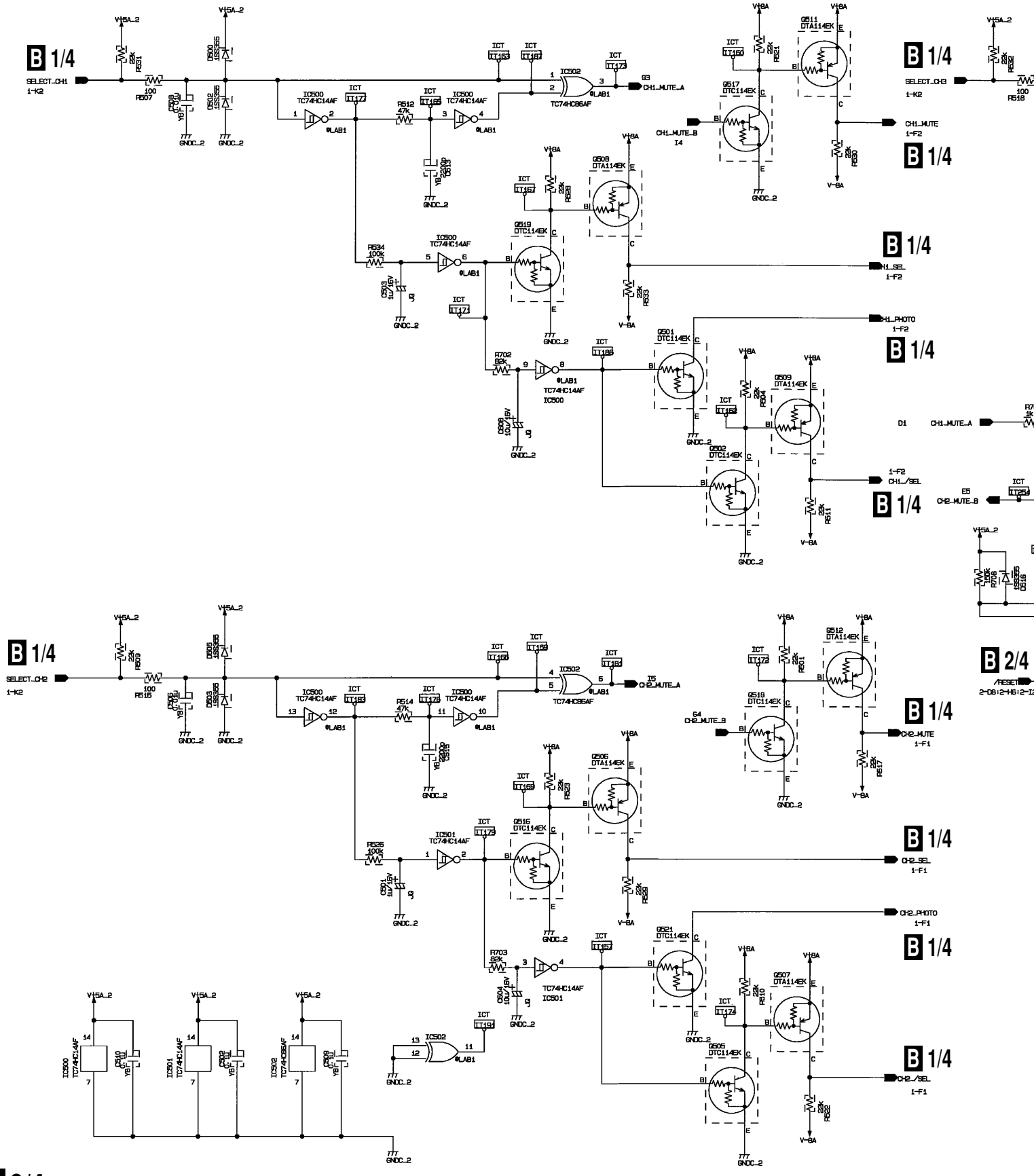

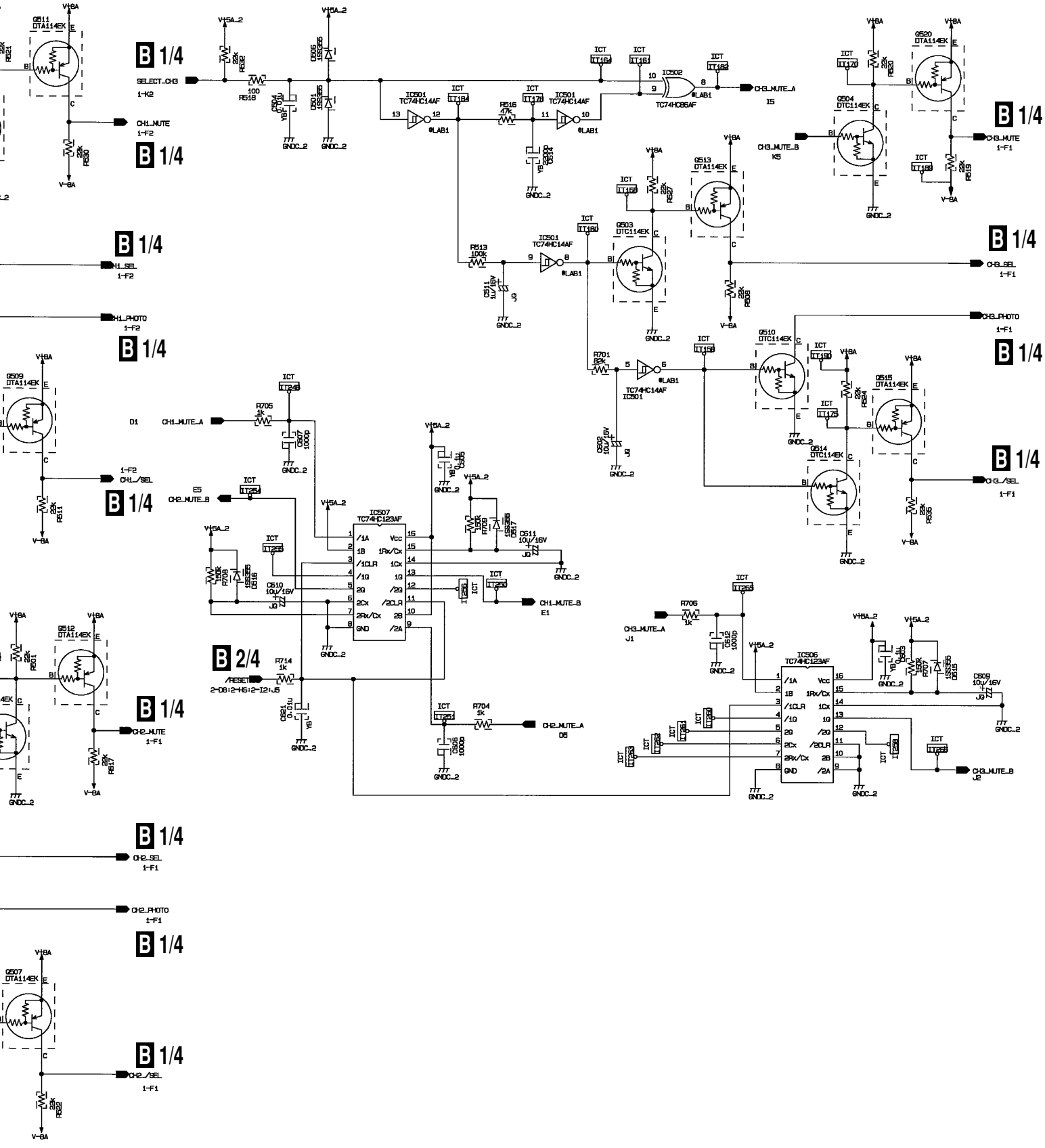
B 1/4
B 2/4
B 3/4
SELECT_CH3
CH1_MUTE
CH1_SEL
CH1_PHOTO
CH2_MUTE
CH2_SEL
CH2_PHOTO
CH3_MUTE_A
CH3_MUTE_B
CH3_MUTE
CH3_SEL
CH3_PHOTO
CH1_MUTE_A
CH1_MUTE_B
CH2_MUTE_A
CH2_MUTE_B
/RESET
IC501 TC74HC14AF
IC502 TC74HC86AF
IC506 TC74HC123AF
IC507 TC74HC123AF
Q503 DTC114EK
Q504 DTC114EK
Q507 DTA114EK
Q509 DTA114EK
Q510 DTC114EK
Q511 DTA114EK
Q512 DTA114EK
Q513 DTA114EK
Q514 DTC114EK
Q515 DTA114EK
Q520 DTA114EK
V-BA
V15A_2
GNDC_2

3.9 TERMB(4/4) ASSY

B 4/4 TERMB ASSY (226902680)

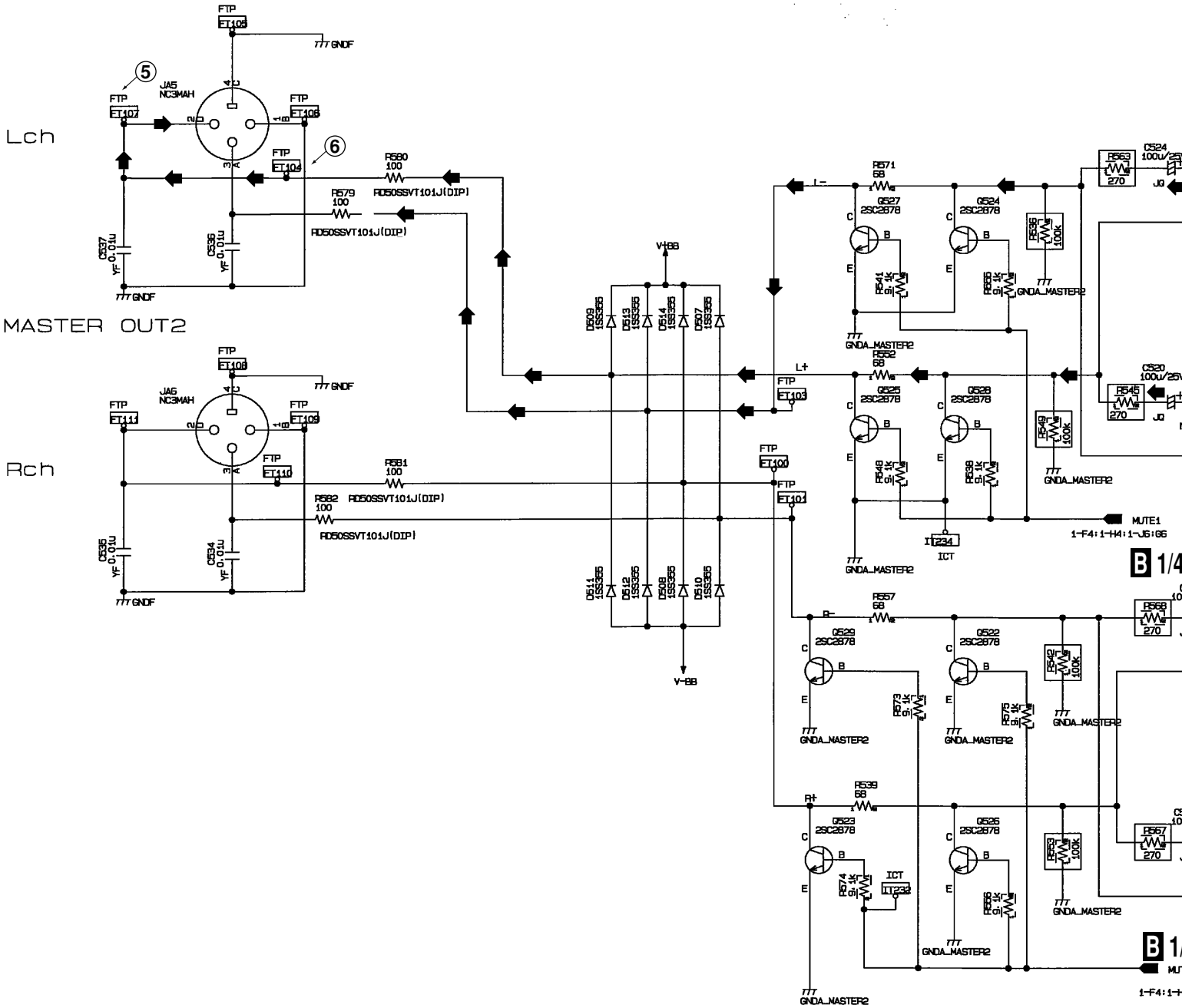

: AUDIO SIGNAL ROUTE

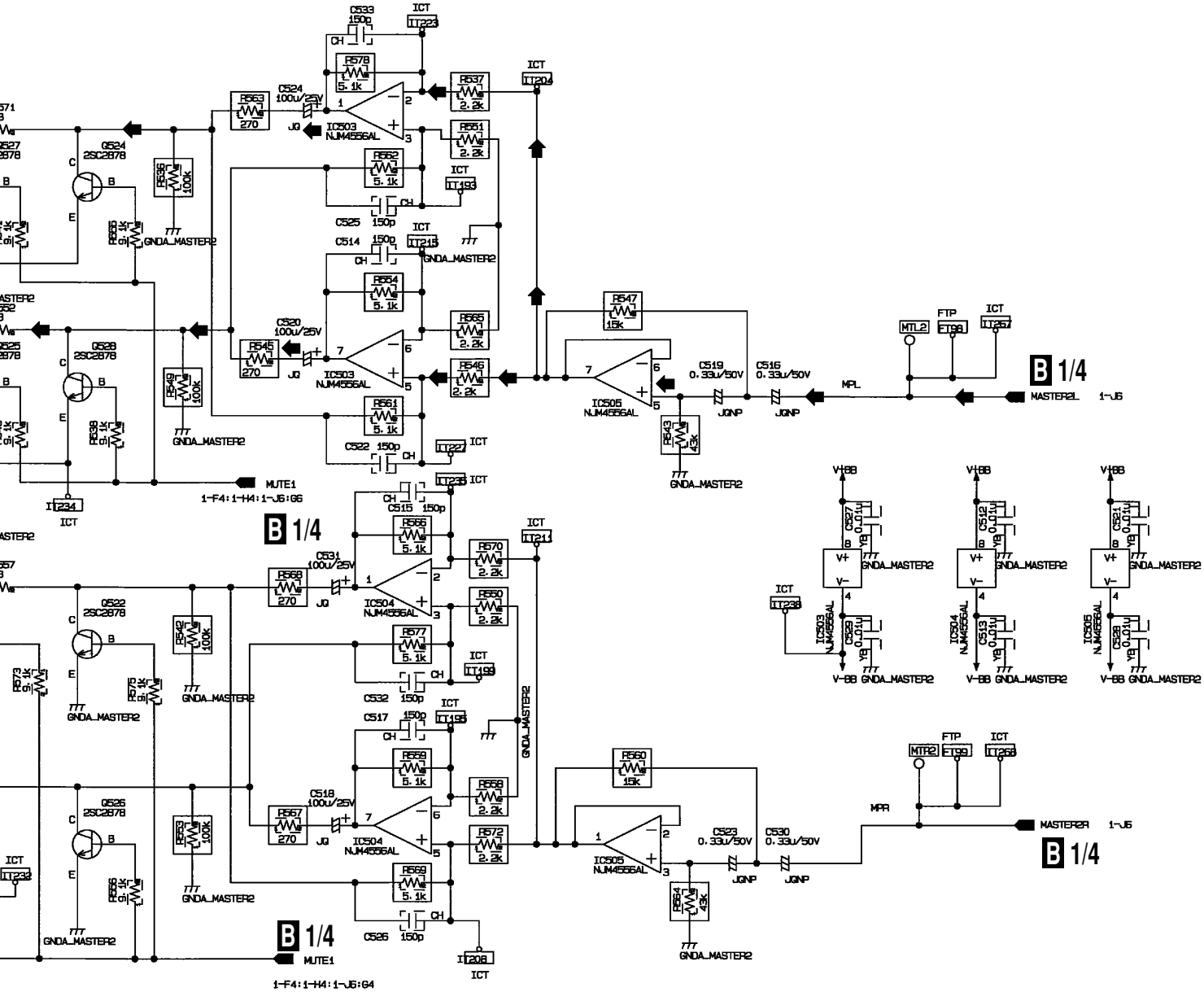

B 4/4

3.10 VR(1/8) ASSY

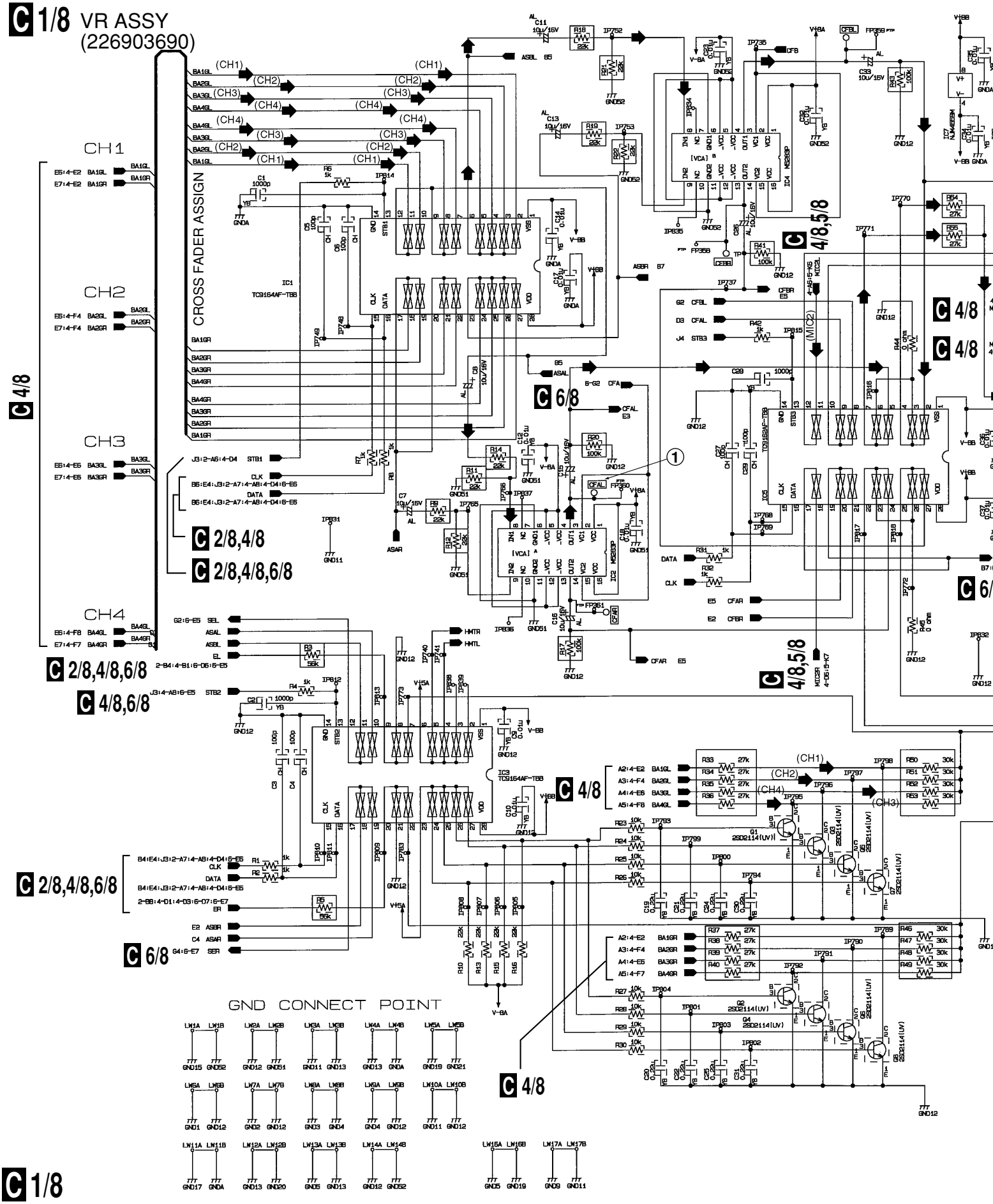

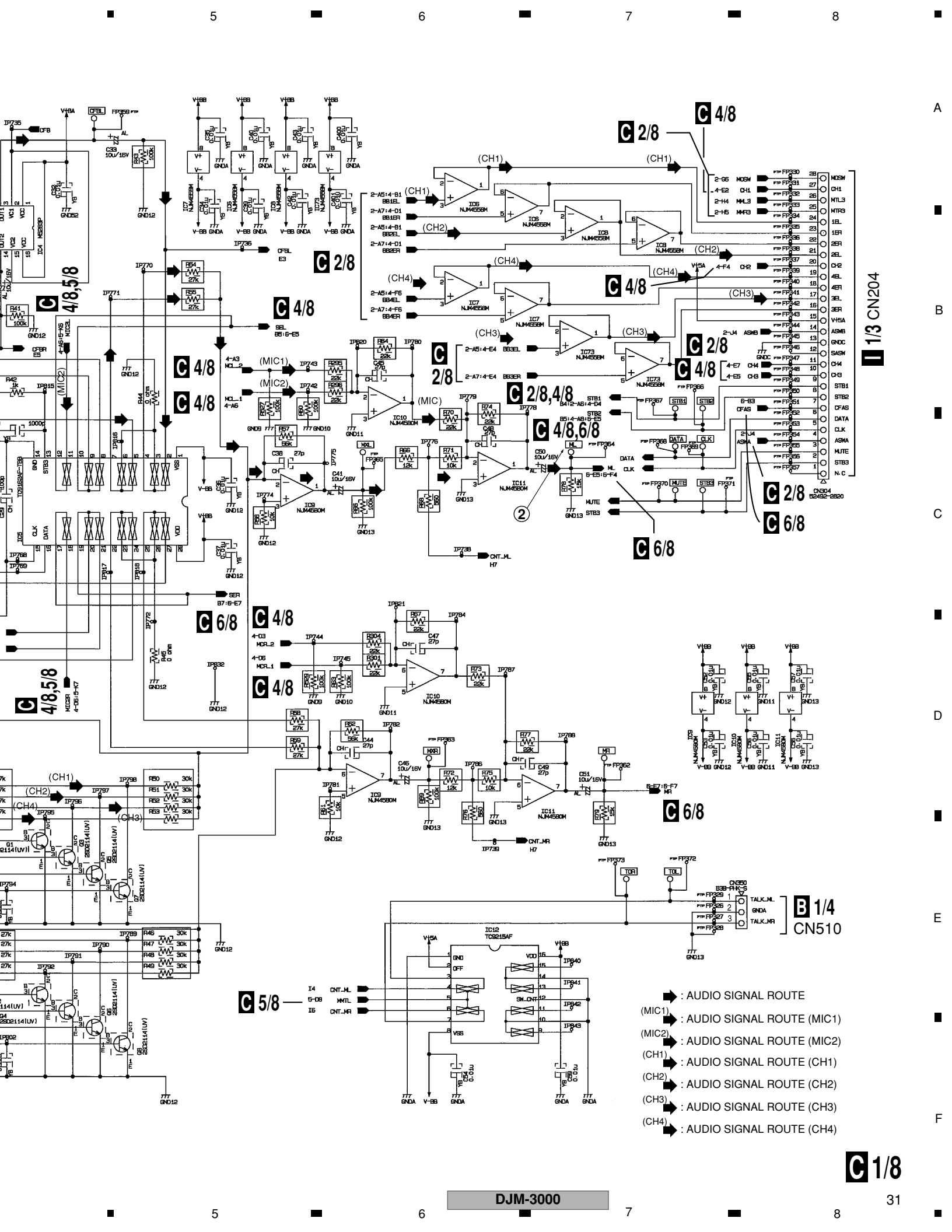
C 4/8
C 2/8
C 4/8,5/8
C 4/8
C 2/8
C 4/8
C 2/8,4/8
C 4/8,6/8
C 2/8
C 6/8
C 6/8
C 4/8
C 4/8
C 4/8,5/8
C 6/8
C 6/8
C 5/8
I 1/3 CN204
B 1/4 CN510
C 1/8
(CH1)
(CH2)
(CH3)
(CH4)
(MIC1)
(MIC2)
(MIC)
: AUDIO SIGNAL ROUTE
: AUDIO SIGNAL ROUTE (MIC1)
: AUDIO SIGNAL ROUTE (MIC2)
: AUDIO SIGNAL ROUTE (CH1)
: AUDIO SIGNAL ROUTE (CH2)
: AUDIO SIGNAL ROUTE (CH3)
: AUDIO SIGNAL ROUTE (CH4)

3.11 VR(2/8) and HP ASSY

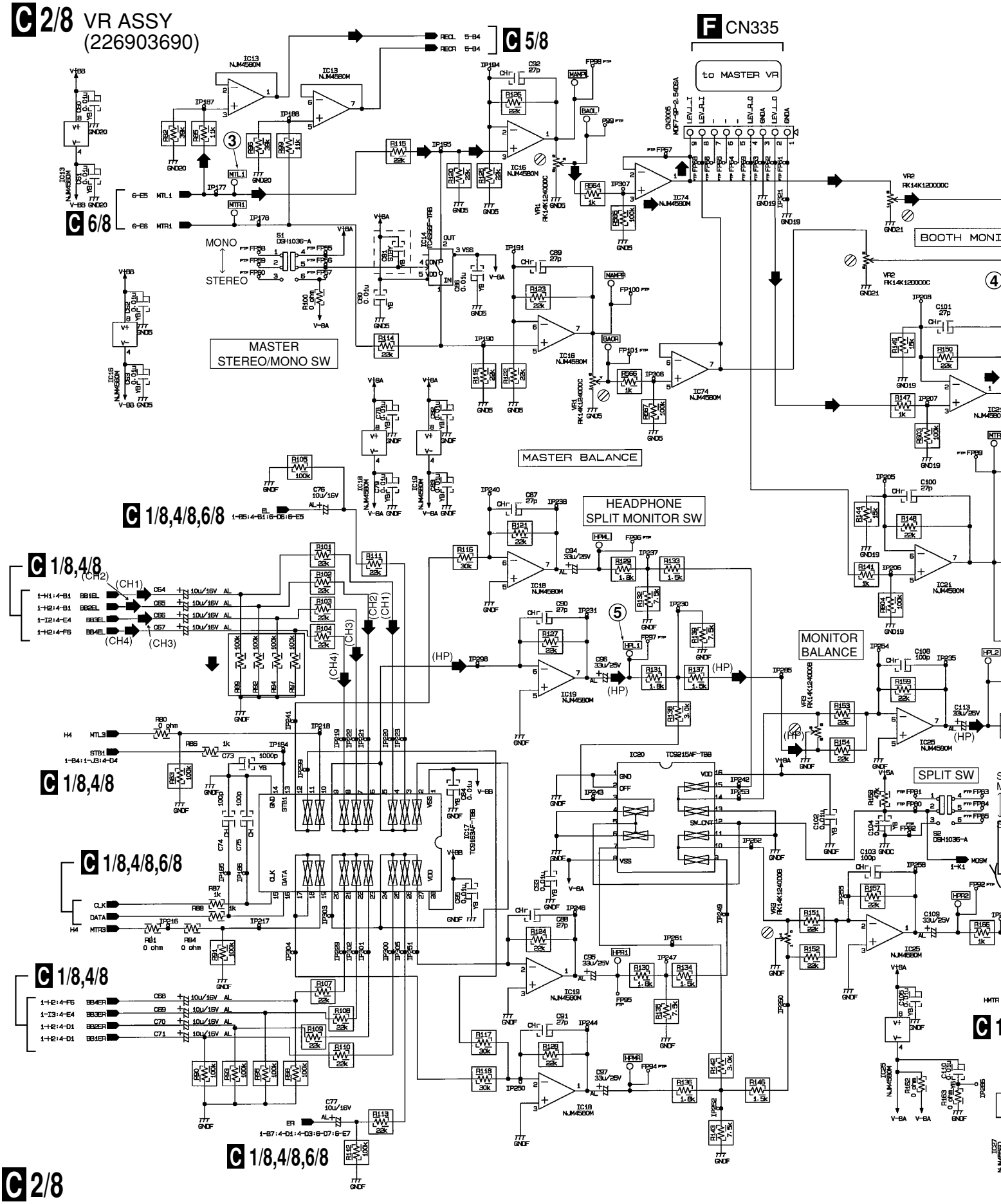

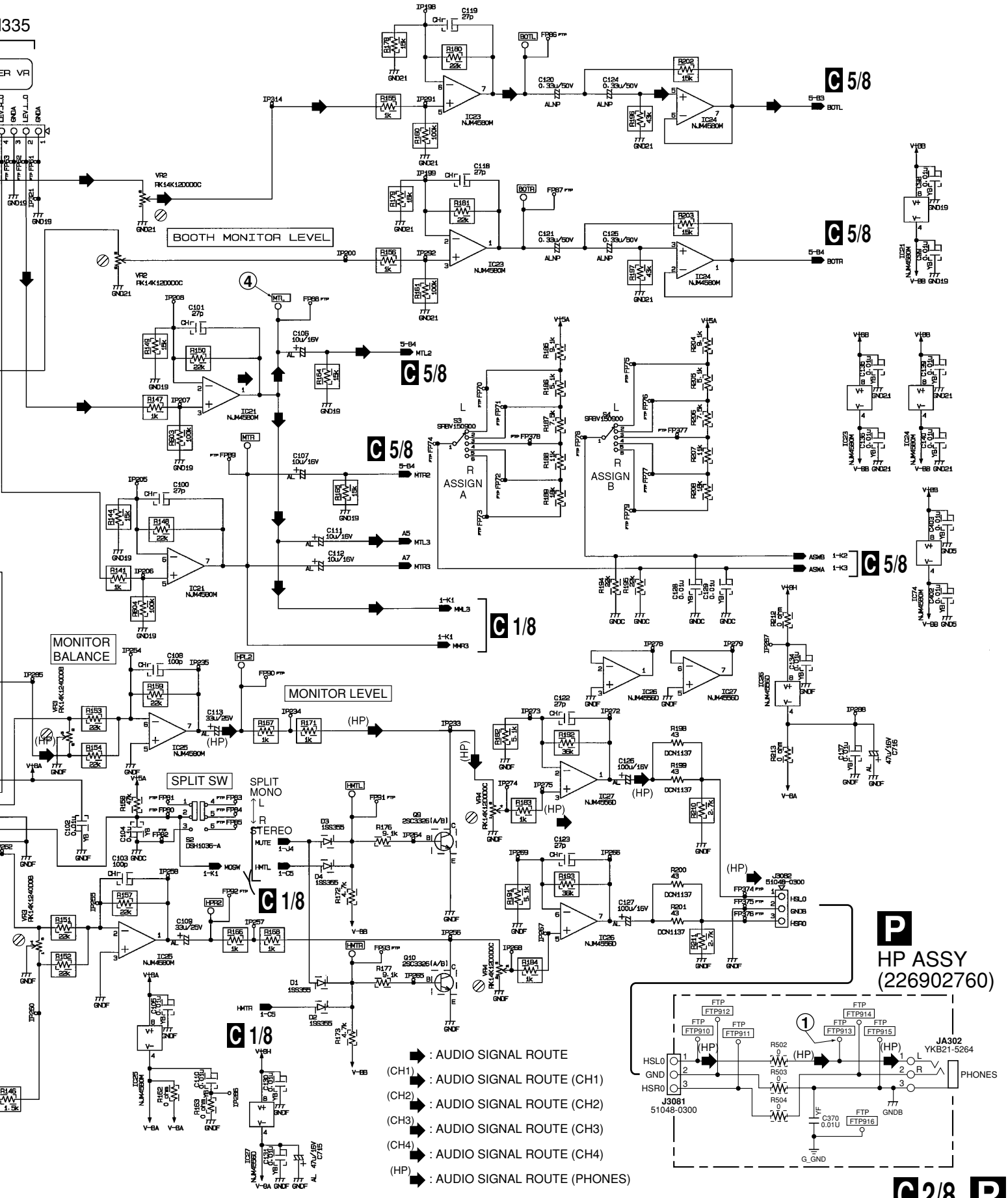
BOOTH MONITOR LEVEL
MONITOR BALANCE
MONITOR LEVEL
SPLIT SW
SPLIT
MONO
L
R
STEREO
R ASSIGN A
R ASSIGN B
C 5/8
C 1/8
P
HP ASSY
(226902760)
JA302
YKB21-5264
PHONES
J3081
51048-0300
HSL0
GND
HSR0
: AUDIO SIGNAL ROUTE
(CH1) : AUDIO SIGNAL ROUTE (CH1)
(CH2) : AUDIO SIGNAL ROUTE (CH2)
(CH3) : AUDIO SIGNAL ROUTE (CH3)
(CH4) : AUDIO SIGNAL ROUTE (CH4)
(HP) : AUDIO SIGNAL ROUTE (PHONES)

3.12 VR(3/8) ASSY

C 3/8 VR ASSY (226903690)

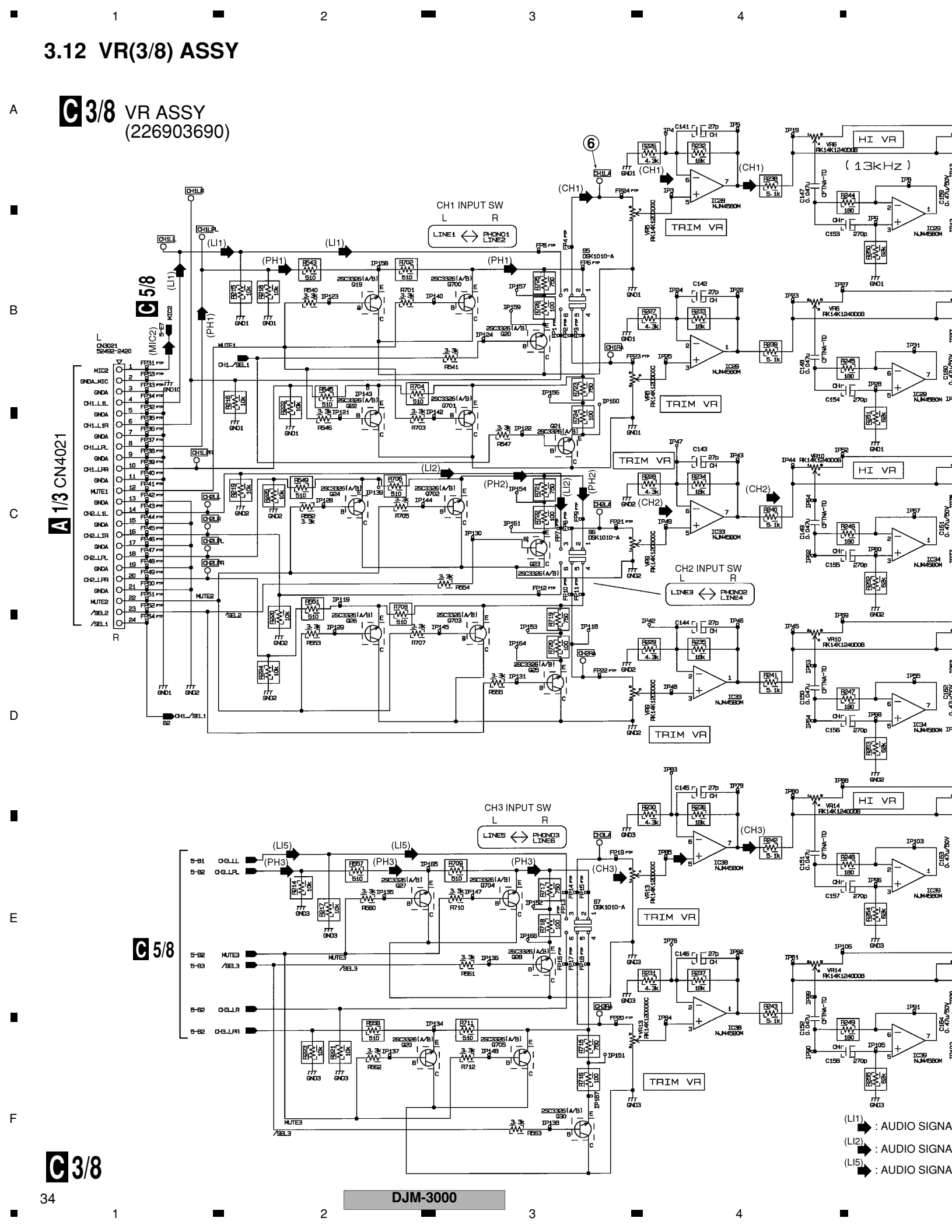

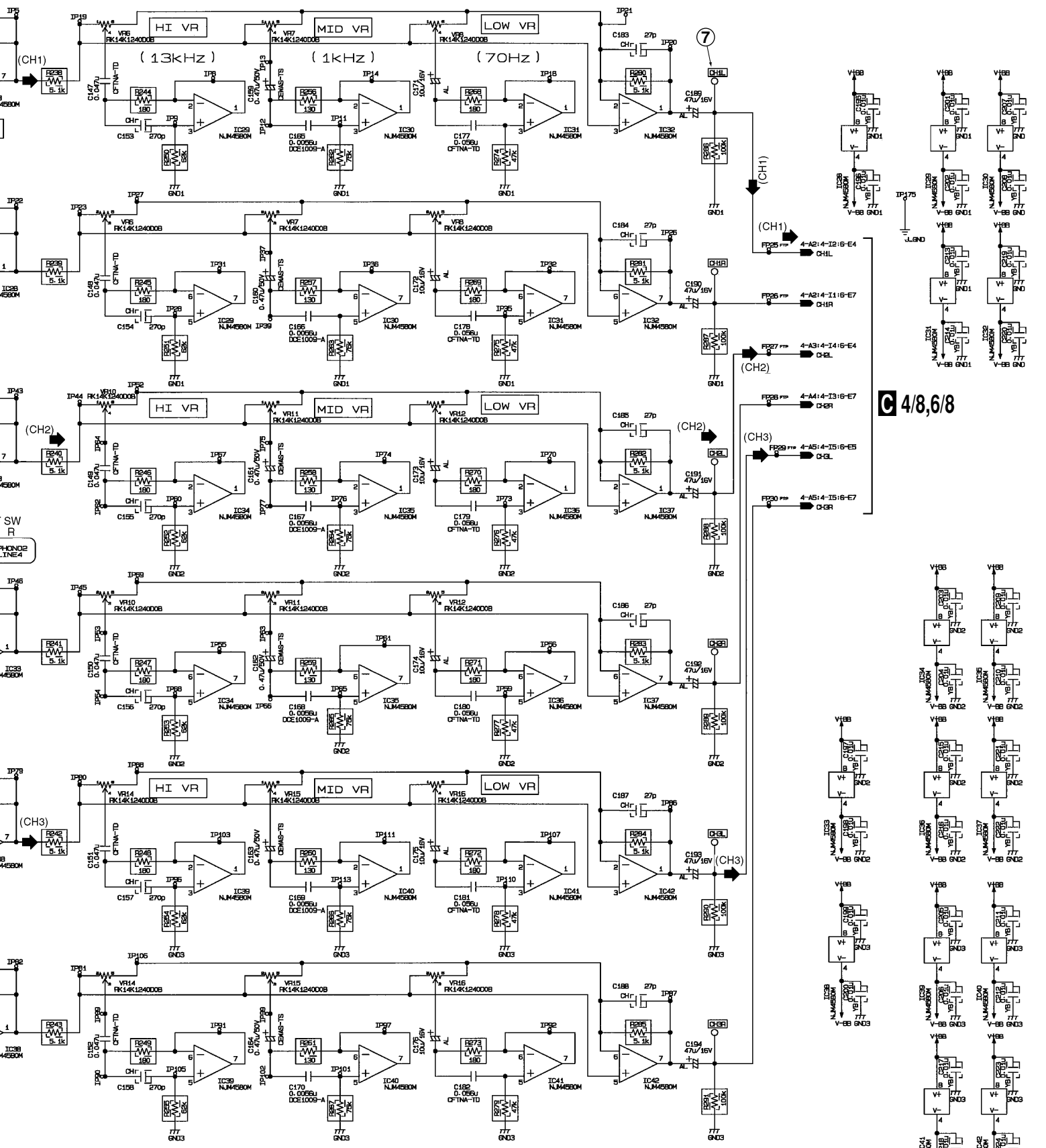
HI VR
MID VR
LOW VR
(13kHz)
(1kHz)
(70Hz)
(CH1)
(CH2)
(CH3)
(LI1) : AUDIO SIGNAL ROUTE (LINE1)
(LI2) : AUDIO SIGNAL ROUTE (LINE2)
(LI5) : AUDIO SIGNAL ROUTE (LINE5)
(PH1) : AUDIO SIGNAL ROUTE (PHONO1)
(PH2) : AUDIO SIGNAL ROUTE (PHONO2)
(PH3) : AUDIO SIGNAL ROUTE (PHONO3)
(CH1) : AUDIO SIGNAL ROUTE (CH1)
(CH2) : AUDIO SIGNAL ROUTE (CH2)
(CH3) : AUDIO SIGNAL ROUTE (CH3)

C 4/8,6/8

C 3/8

3.13 VR(4/8) ASSY

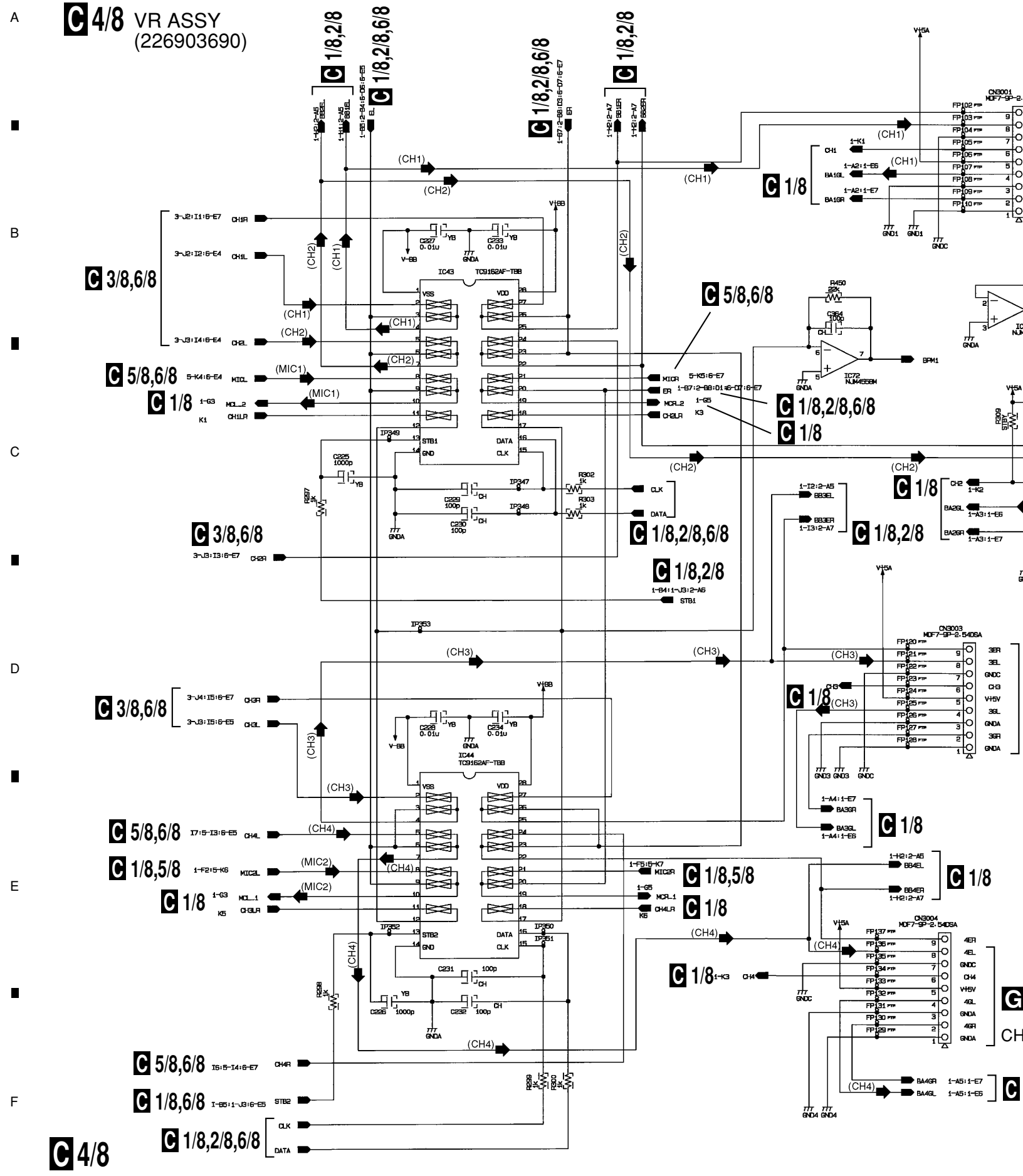

(MIC1) : AUDIO SIGNAL ROUTE (MIC1)
(MIC2) : AUDIO SIGNAL ROUTE (MIC2)
(CH1) : AUDIO SIGNAL ROUTE (CH1)
(CH2) : AUDIO SIGNAL ROUTE (CH2)
(CH3) : AUDIO SIGNAL ROUTE (CH3)
(CH4) : AUDIO SIGNAL ROUTE (CH4)

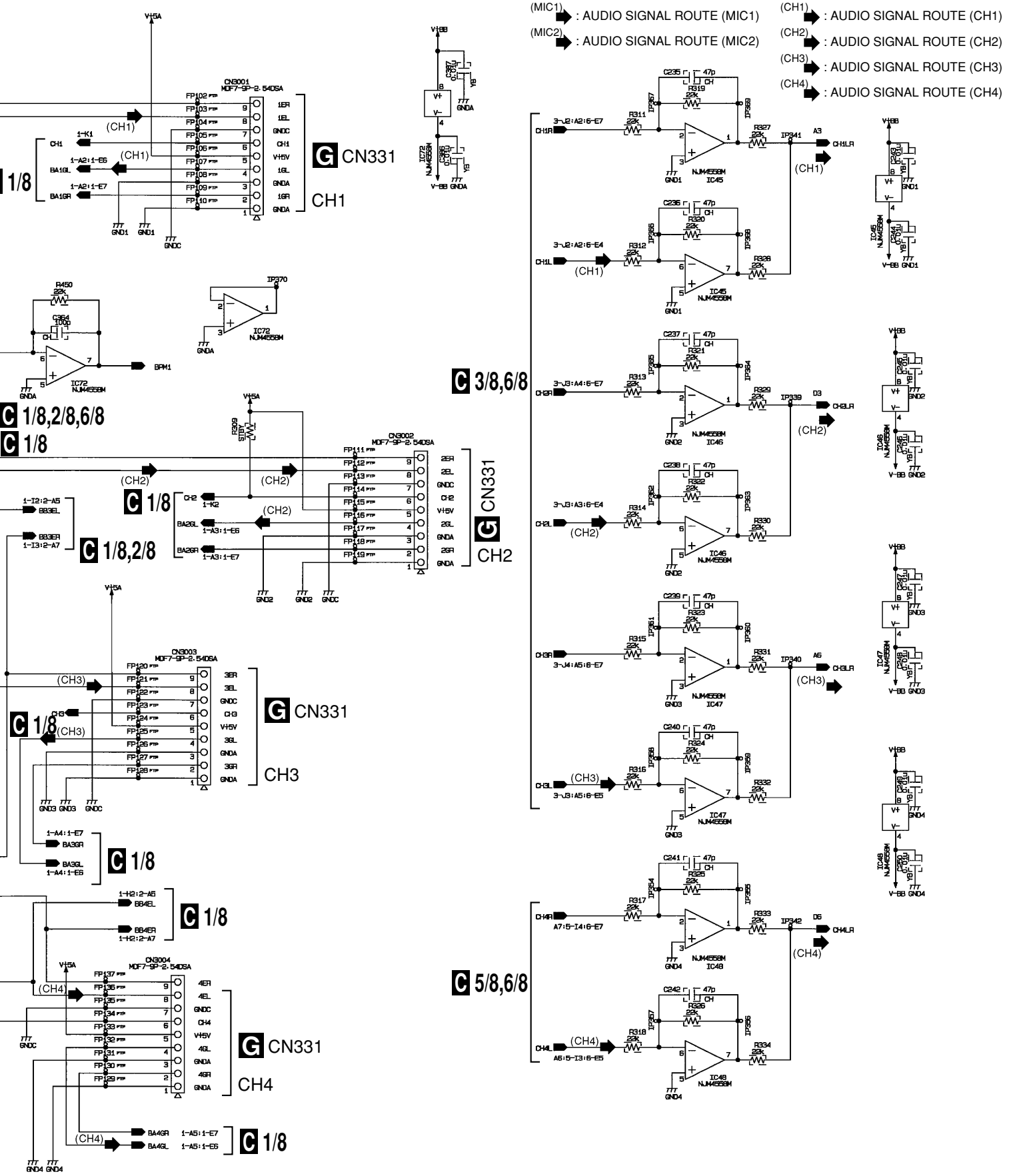

3.14 VR(5/8) ASSY

C 5/8 VR ASSY (226903690)

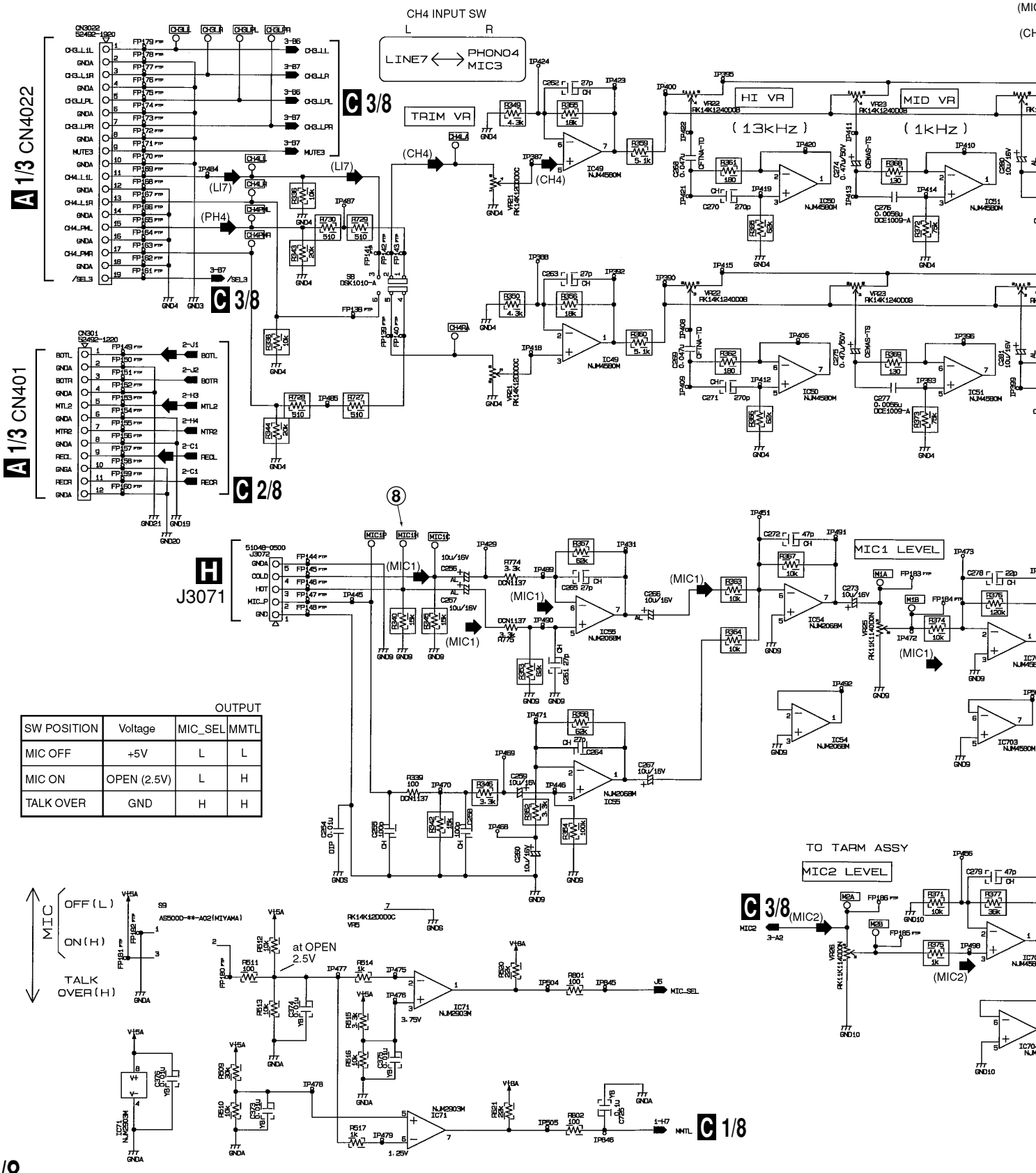

OUTPUT

SW POSITION	Voltage	MIC_SEL	MMTL
MIC OFF	+5V	L	L
MIC ON	OPEN (2.5V)	L	H
TALK OVER	GND	H	H

C 5/8

: AUDIO SIGNAL ROUTE

(LI7) : AUDIO SIGNAL ROUTE (LINE7)

(PH4) : AUDIO SIGNAL ROUTE (PHONO4)

(MIC1) : AUDIO SIGNAL ROUTE (MIC1)

(MIC2) : AUDIO SIGNAL ROUTE (MIC2)

(CH4) : AUDIO SIGNAL ROUTE (CH4)

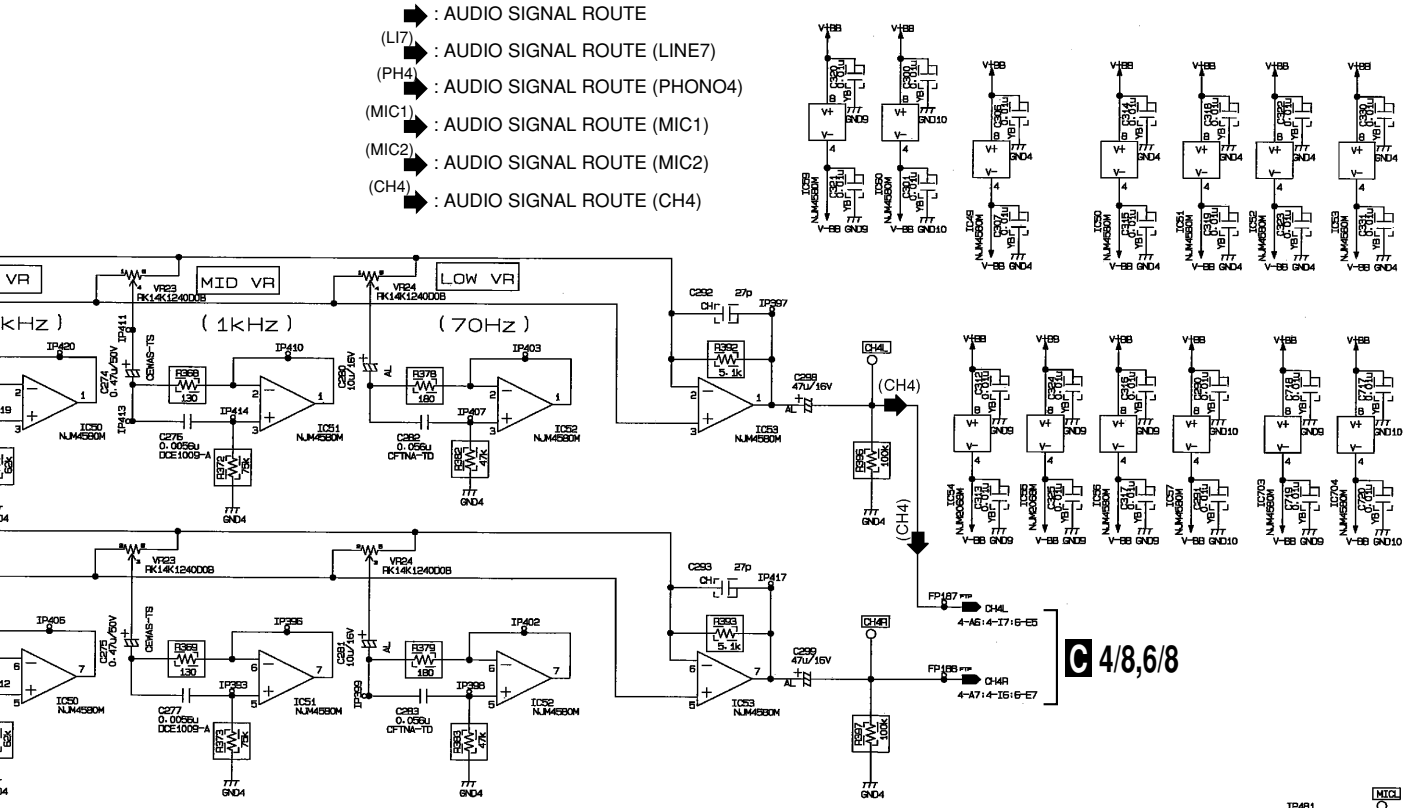

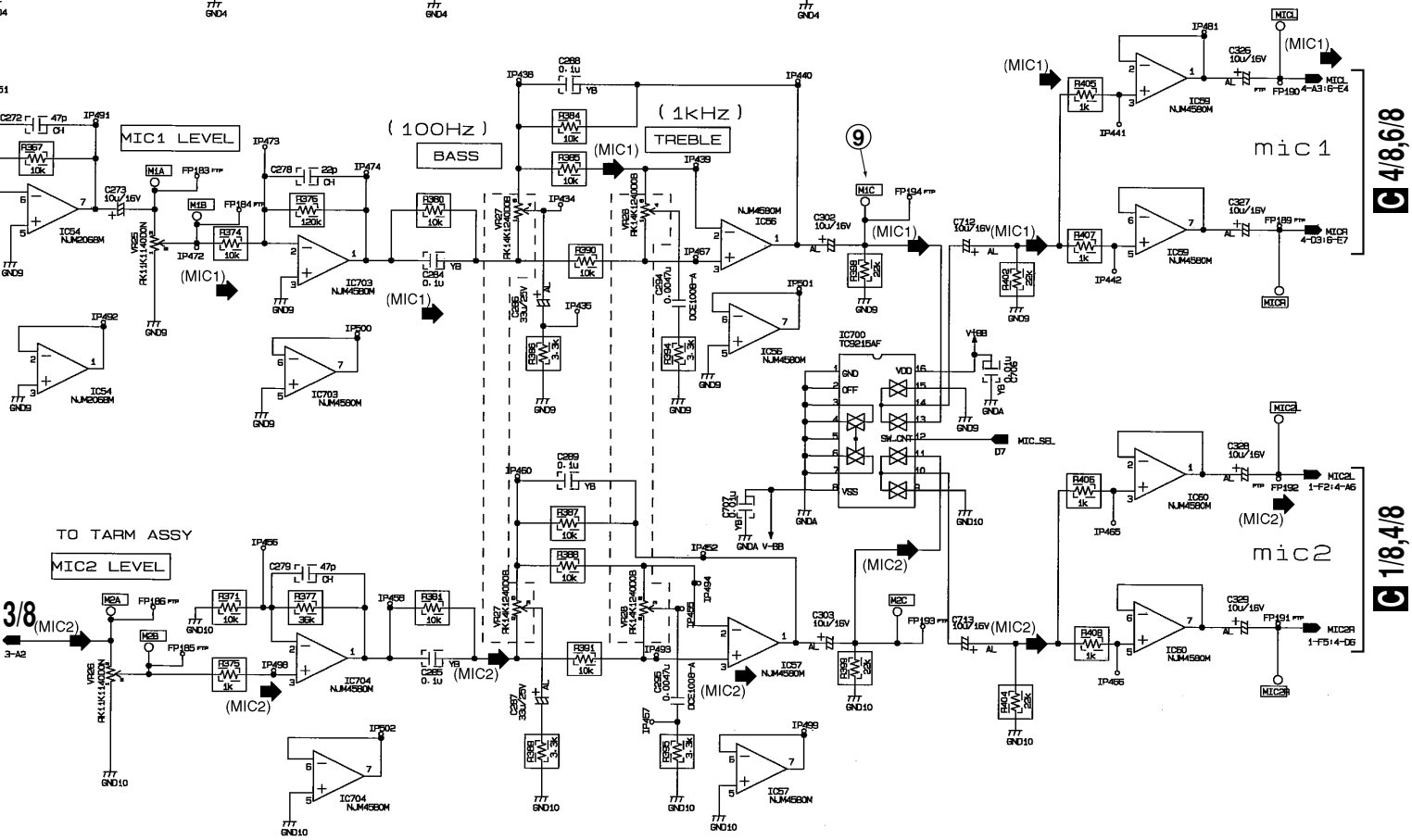



3.15 VR(6/8), CF and CFCURV ASSYS ASSY

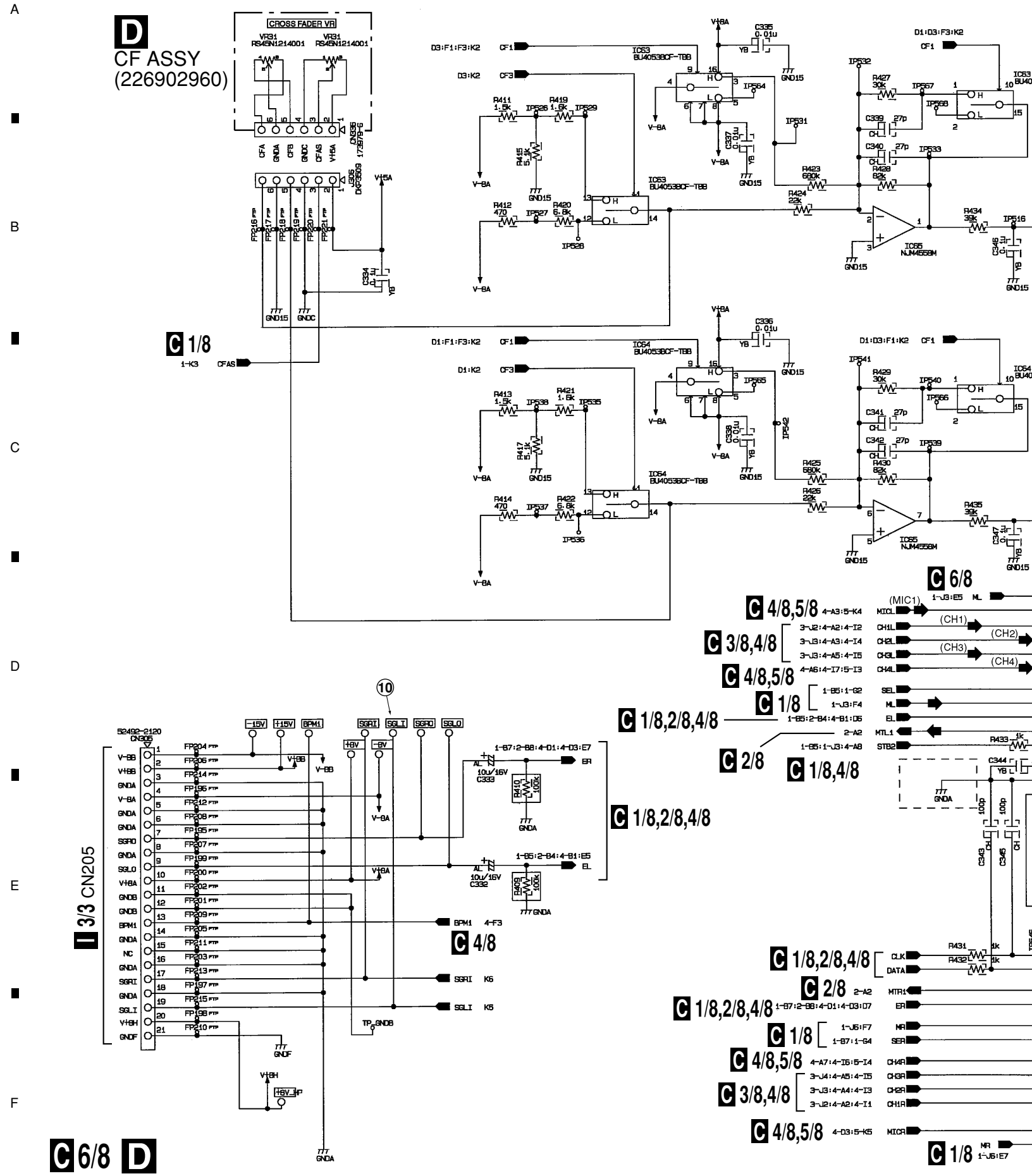

CROSS FADER CURVE

C 6/8 VR ASSY (226903690)

E CFCURV ASSY (226903700)

: AUDIO SIGNAL ROUTE
(MIC1) : AUDIO SIGNAL ROUTE (MIC1)
(CH1) : AUDIO SIGNAL ROUTE (CH1)
(CH2) : AUDIO SIGNAL ROUTE (CH2)
(CH3) : AUDIO SIGNAL ROUTE (CH3)
(CH4) : AUDIO SIGNAL ROUTE (CH4)

3.16 VR(7/8) ASSY

C 7/8 VR ASSY (226903690)

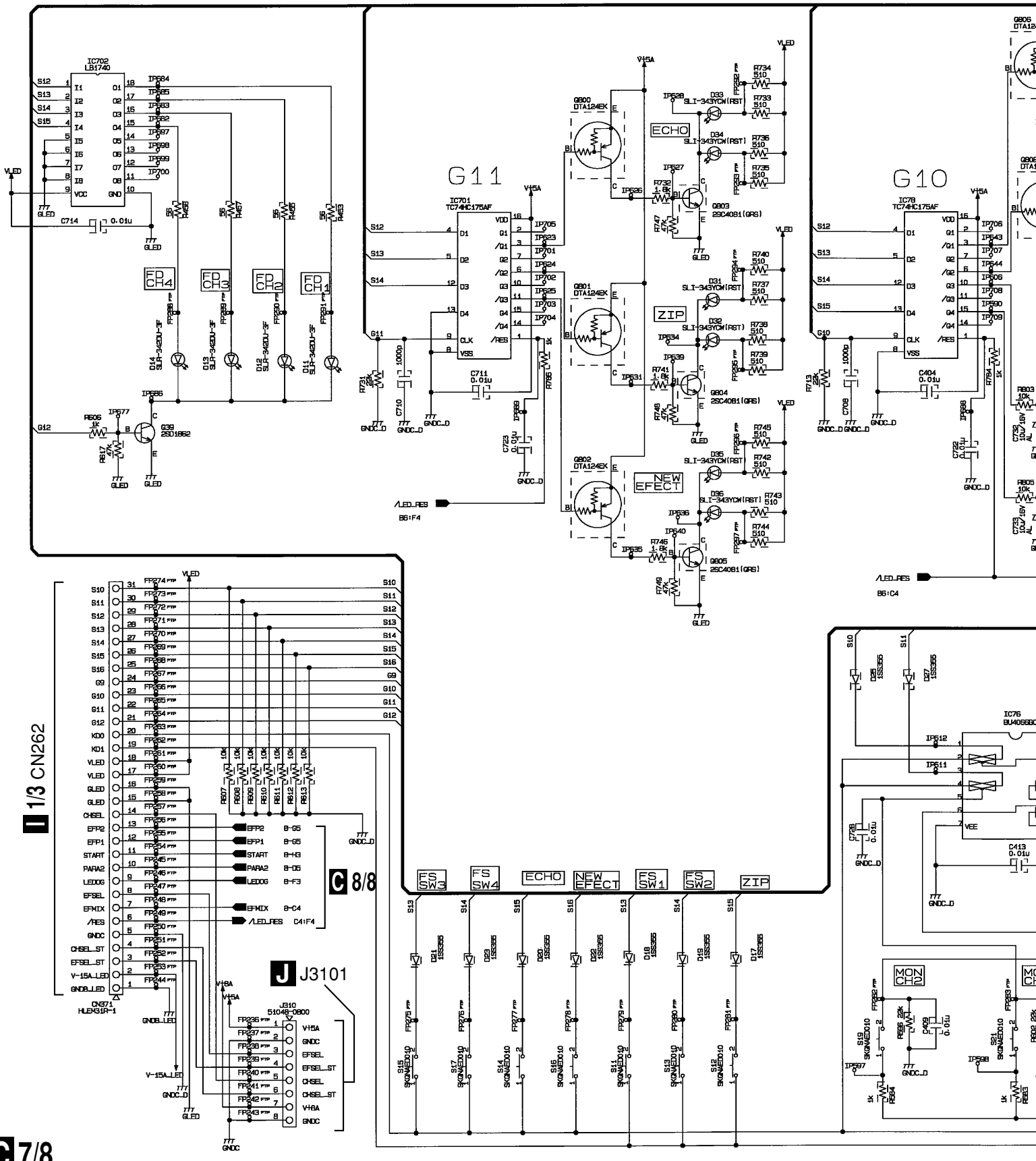

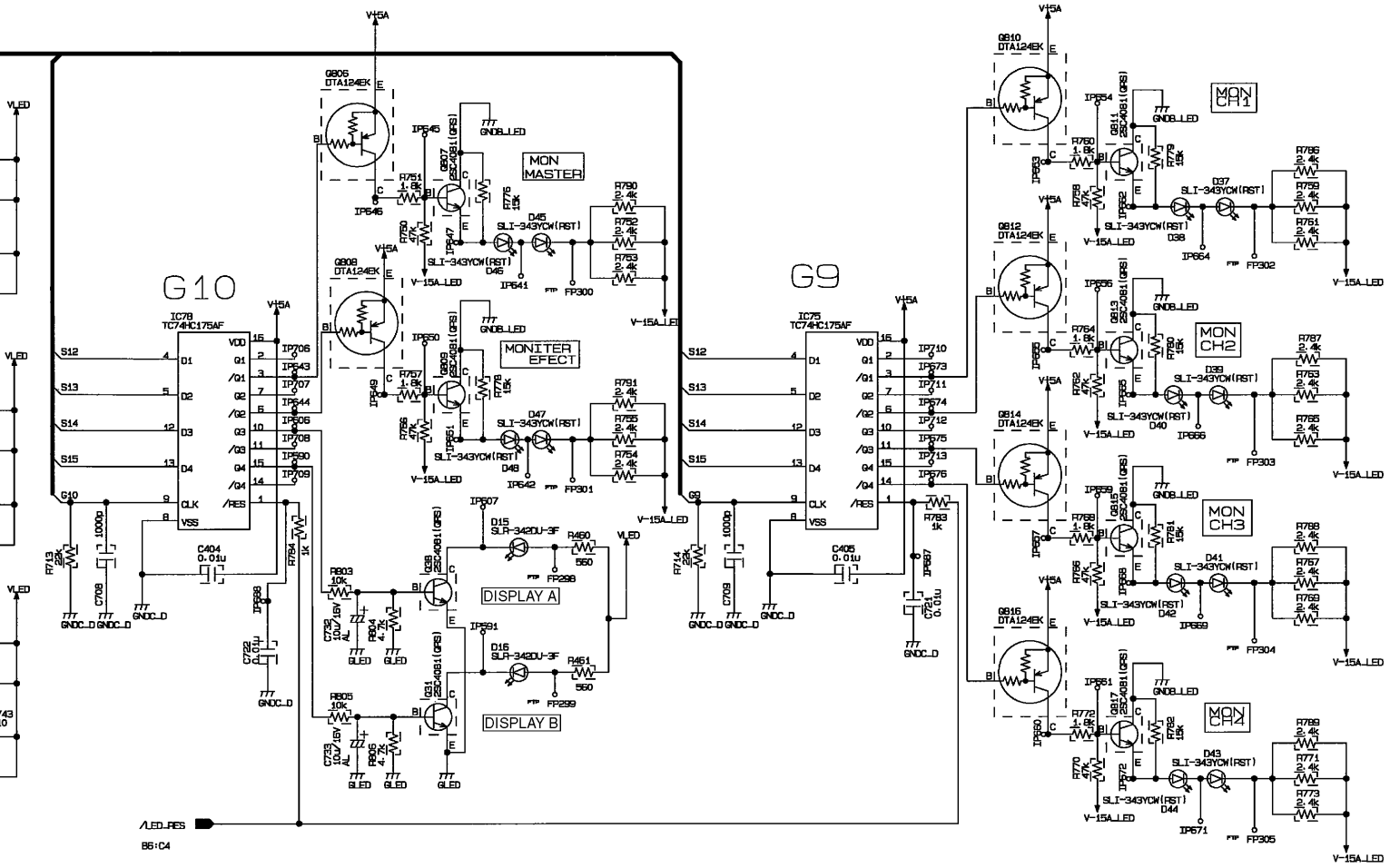
G10
G9
MON MASTER
MONITER EFECT
DISPLAY A
DISPLAY B
MON CH1
MON CH2
MON CH3
MON CH4
V15A
V-15A_LED
/LED_RES
B6:C4

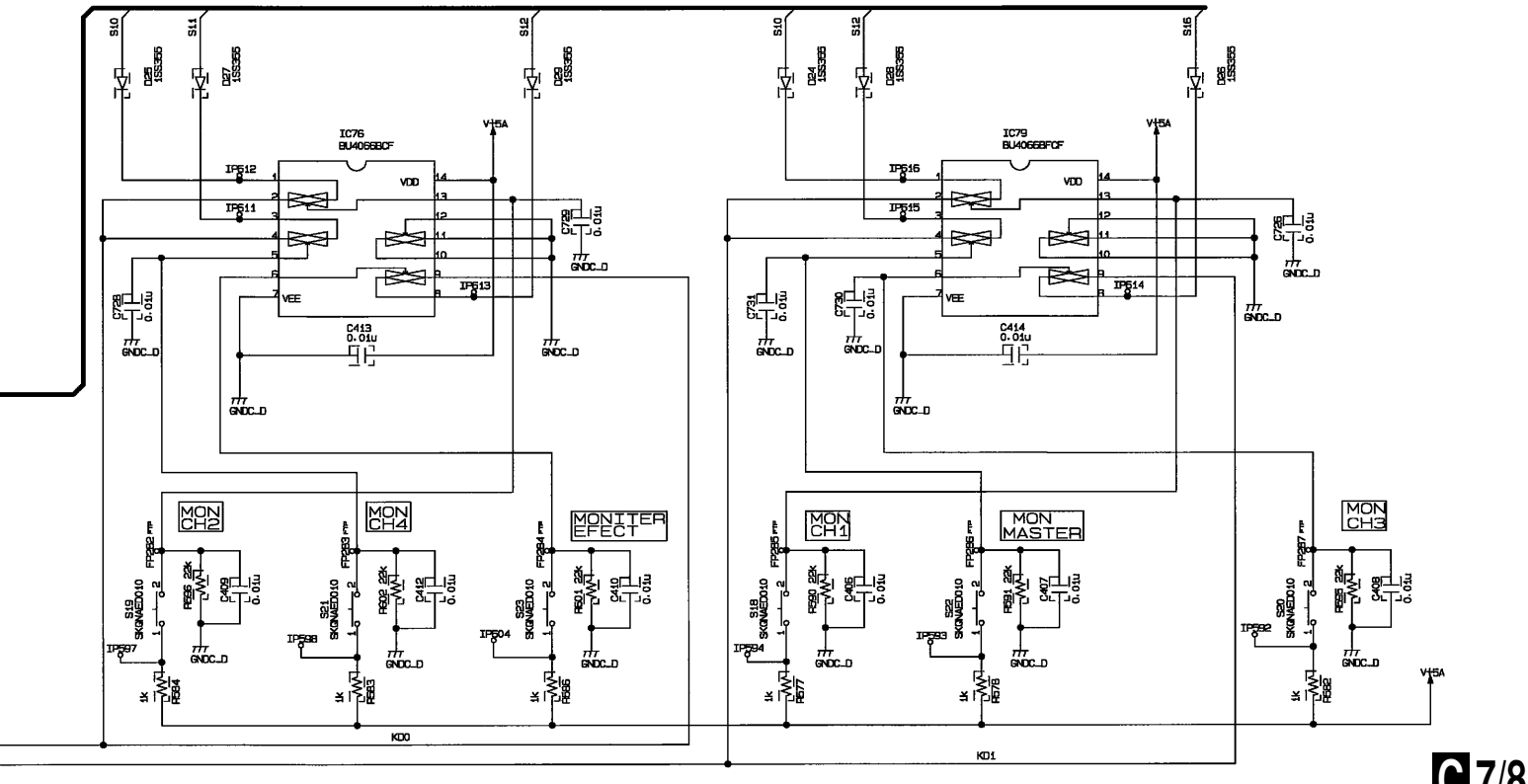
IC76 BU4066BCF
IC79 BU4066BFQF
MON CH2
MON CH4
MONITER EFECT
MON CH1
MON MASTER
MON CH3
KD0
KD1

3.17 VR(8/8) ASSY

C 8/8 VR ASSY (226903690)

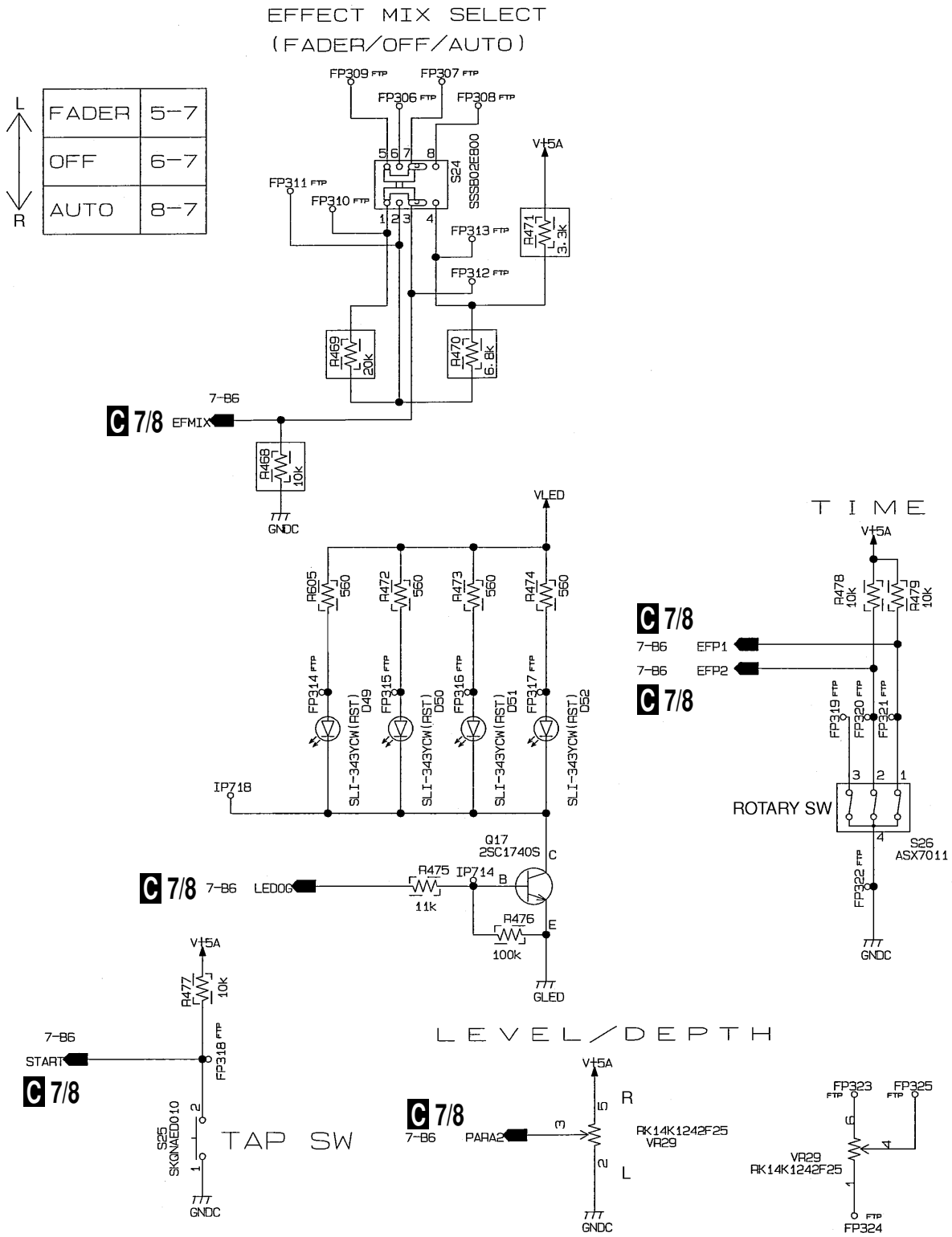

C 8/8

3.18 MAF, CHF1-4 and MIC ASSYS

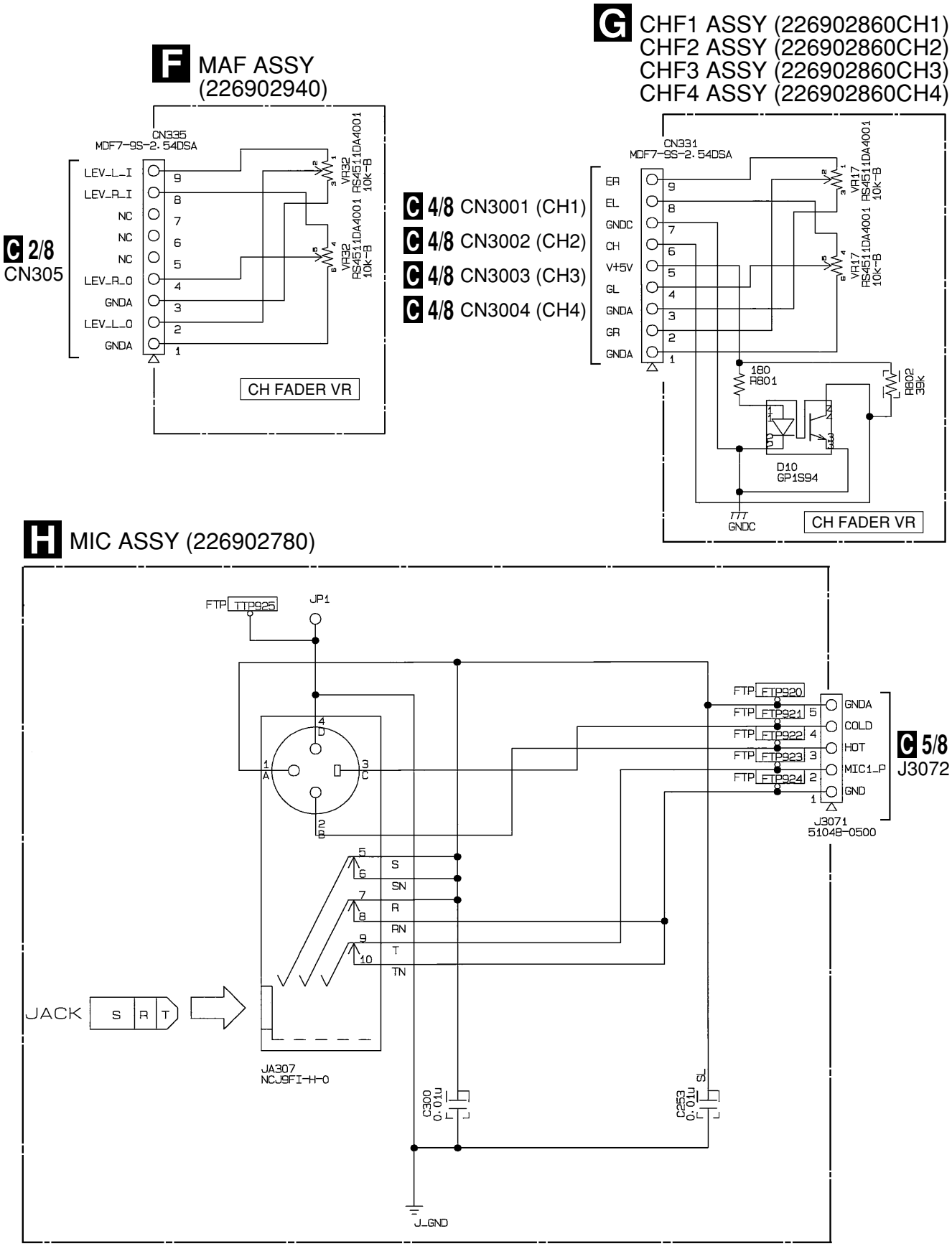

F G H

3.19 DSP(1/3) ASSY

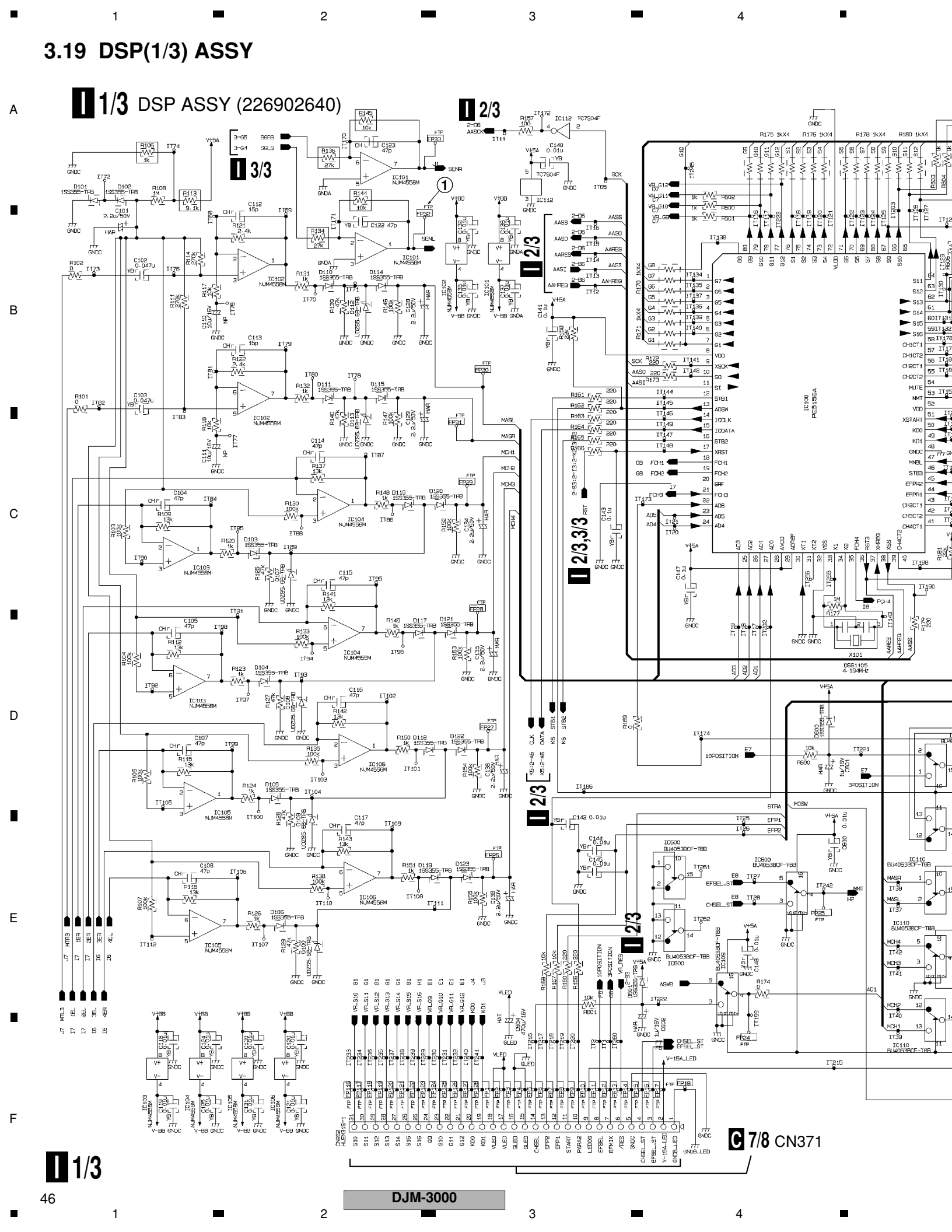

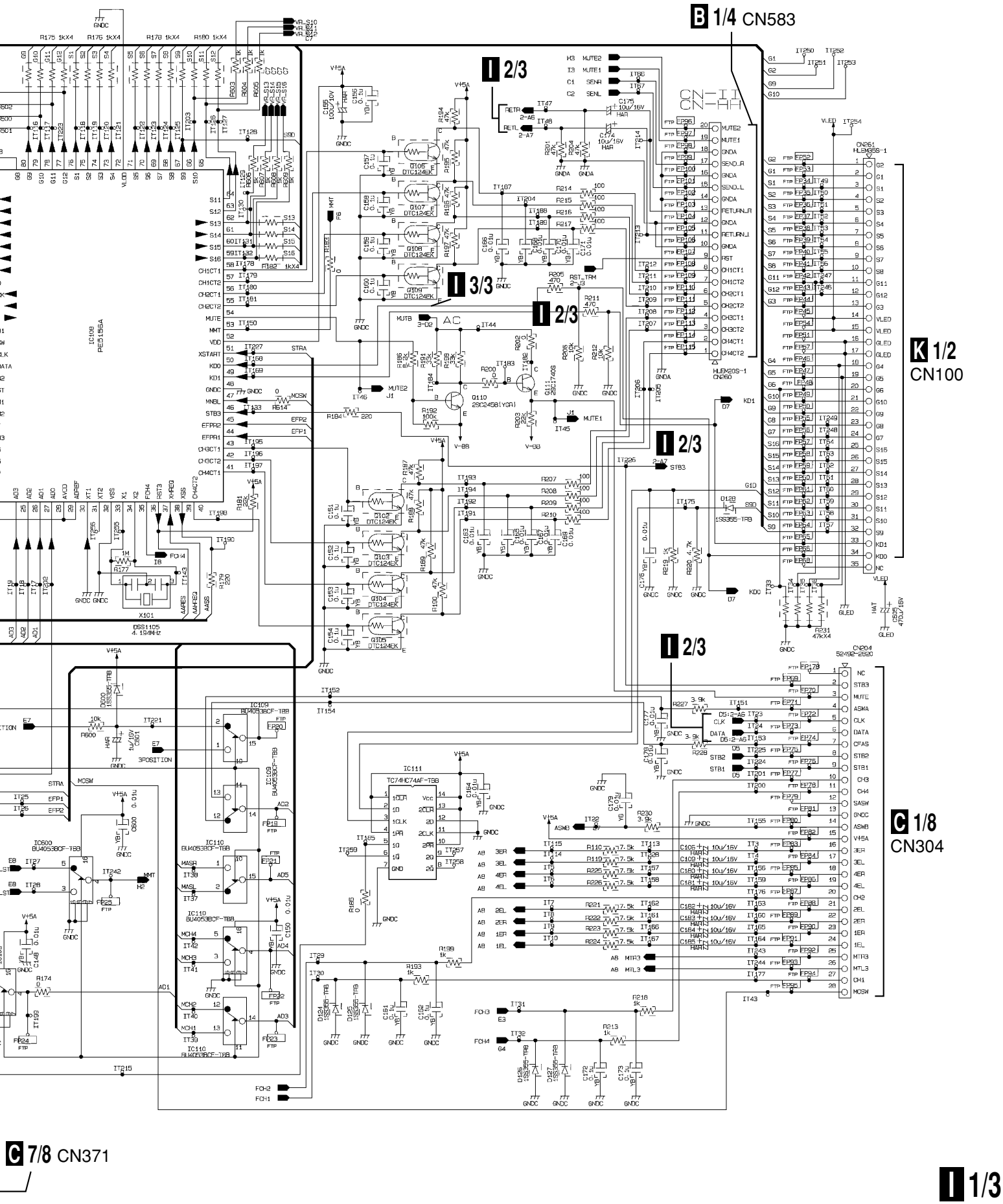
B 1/4 CN583
I 2/3
I 3/3
I 2/3
I 2/3
I 2/3
K 1/2
CN100
C 1/8
CN304
C 7/8 CN371
I 1/3

3.20 DSP(2/3) ASSY

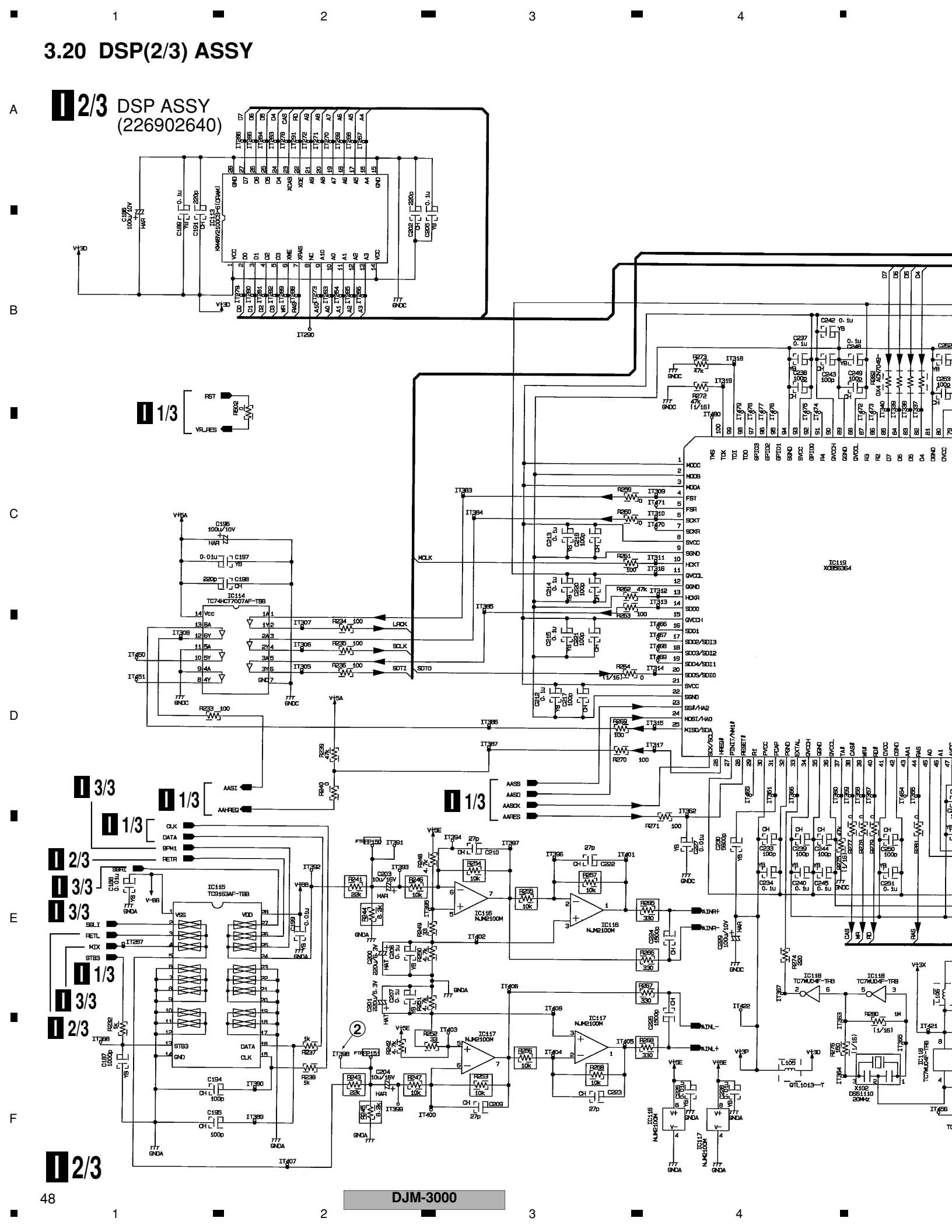

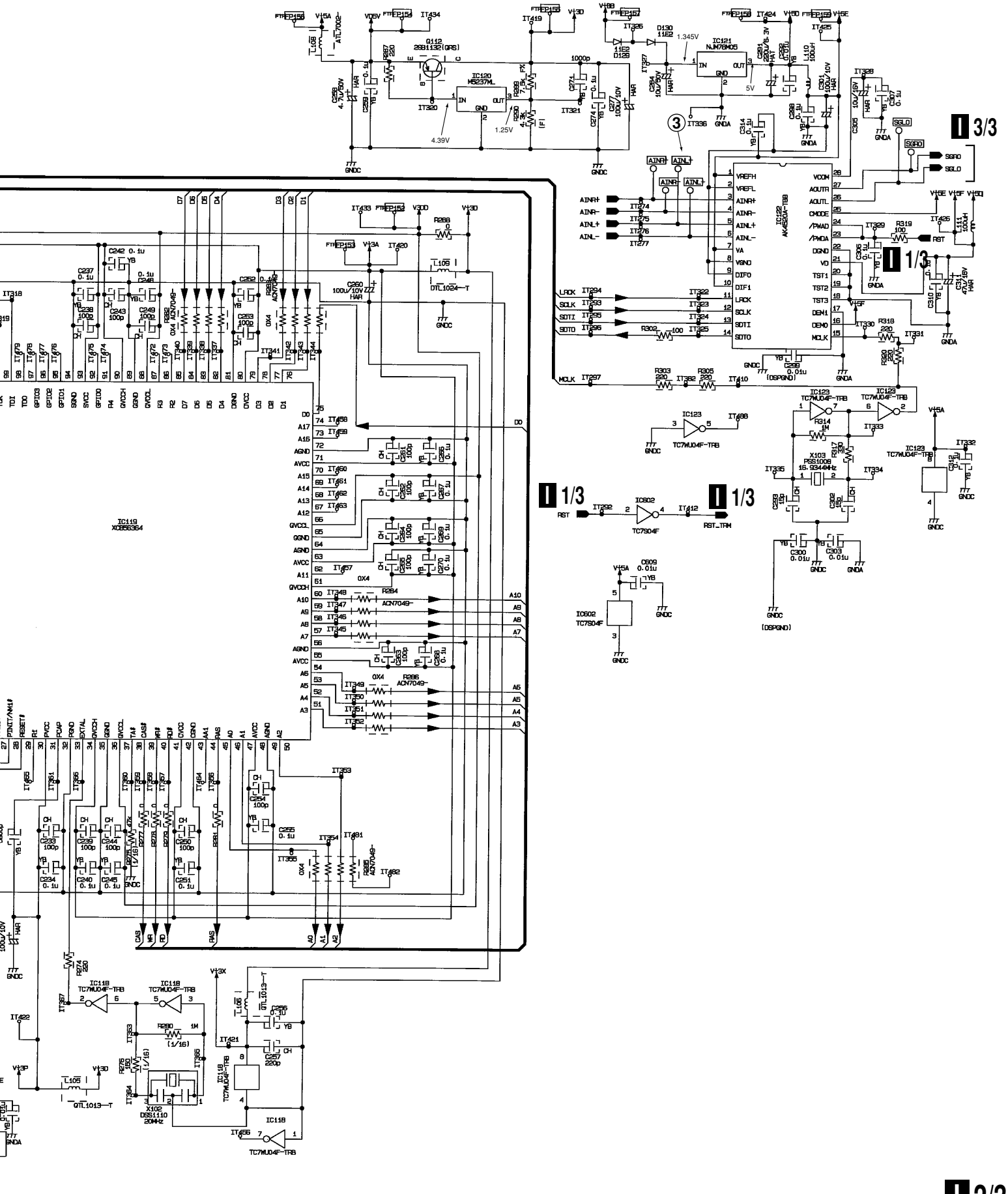

IC119
XC856364
IC120
M5237ML
IC121
NJM78M05
IC122
AK4520A-TBB
IC123
TC7WU04F-TRB
IC602
TC7S04F
X103
PSS1008
16.9344MHz
X102
DSS1110
20MHz
Q112
2SB1132(QRS)
1/3
3/3
2/3

3.21 DSP(3/3) ASSY

I 3/3 DSP ASSY

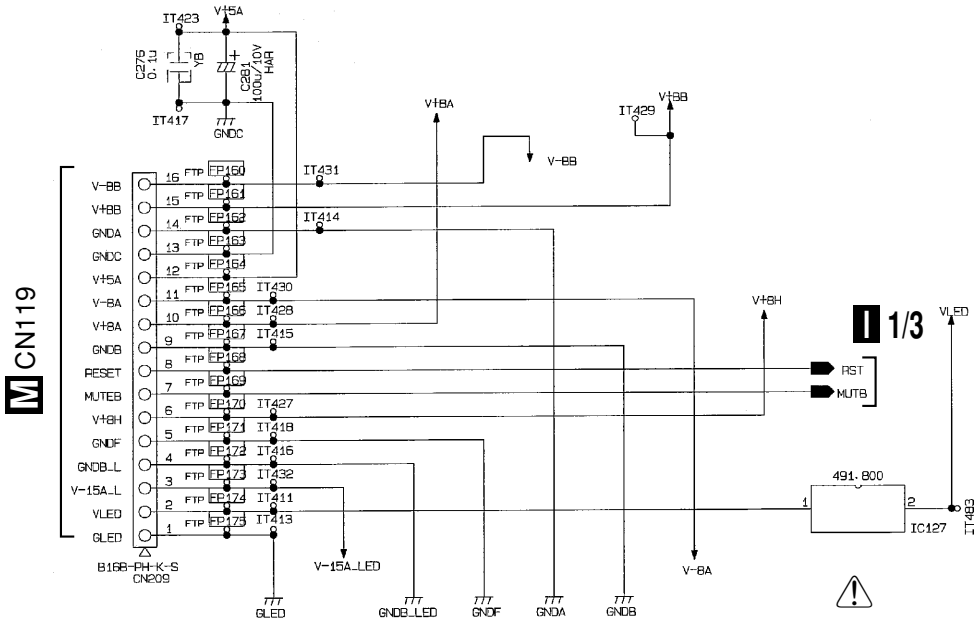

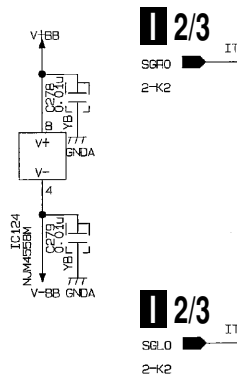

IC124

No.	Voltage (V)
1	0
2	0
3	0
4	-15.13
5	0
6	0
7	0
8	14.92

IC601

No.	Voltage (V)
1	0
2	0
3	0
4	-15.12
5	0
6	0
7	0
8	14.93

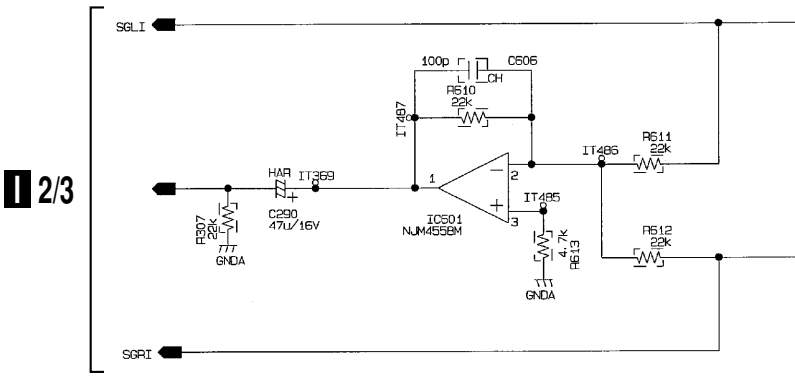

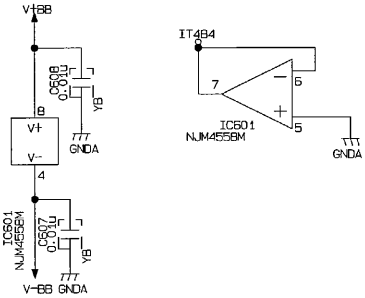

I 3/3

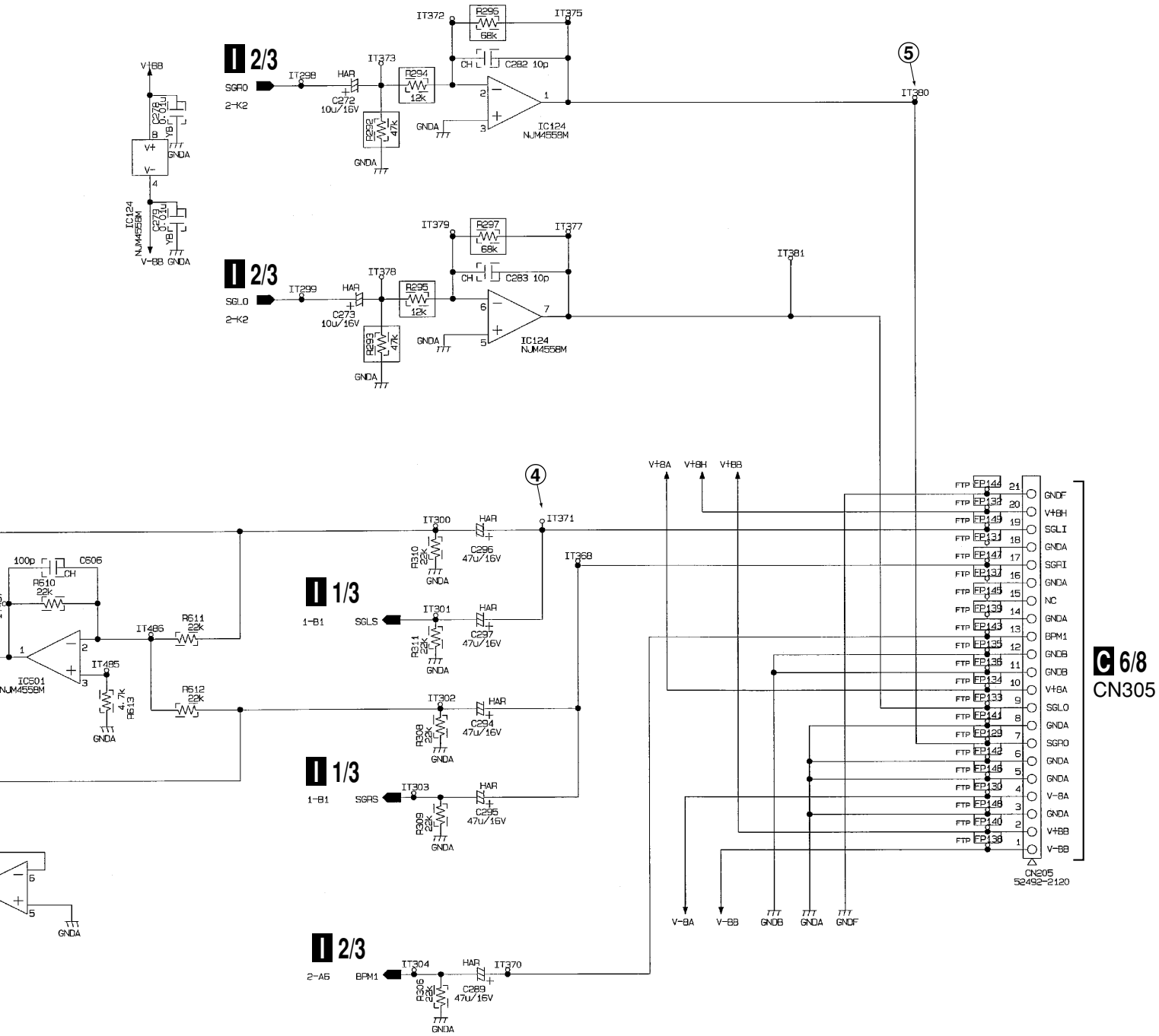
I 2/3
SGRO
2-K2
IT298
HAR
C272
10u/16V
IT373
R294
12k
R292
47k
GNDA
IT372
R295
68k
IT375
CH
C282 10p
IC124
NJM4559M
5
IT380
V+BB
C278
0.01u
YB
V+
V-
GNDA
IC124
NJM4559M
C279
0.01u
V-BB
I 2/3
SGLO
2-K2
IT299
HAR
C273
10u/16V
IT378
R295
12k
R293
47k
IT379
R297
68k
IT377
C283 10p
IT381
4
IT371
IT300
HAR
R310
22k
C296
47u/16V
I 1/3
1-B1
SGLS
IT301
R311
22k
C297
47u/16V
IT368
I 1/3
1-B1
SGRS
IT303
R309
22k
C295
47u/16V
I 2/3
2-A6
BPM1
IT304
R306
22k
C289
47u/16V
IT370
100p
C606
CH
R610
22k
IT486
R611
22k
IT485
IC501
NJM4558M
4.7k
R613
R612
22k
V+BA
V+BH
V+BB
V-BA
V-BB
GNDB
GNDA
GNDF
C 6/8
CN305
CN205
52492-2120
GNDF
V+BH
SGLI
GNDA
SGRI
GNDA
NC
GNDA
BPM1
GNDB
GNDB
V+BA
SGLO
GNDA
SGRO
GNDA
GNDA
V-BA
GNDA
V+BB
V-BB

I 3/3

3.22 EFFECT ASSY

J EFFECT ASSY (226902740)

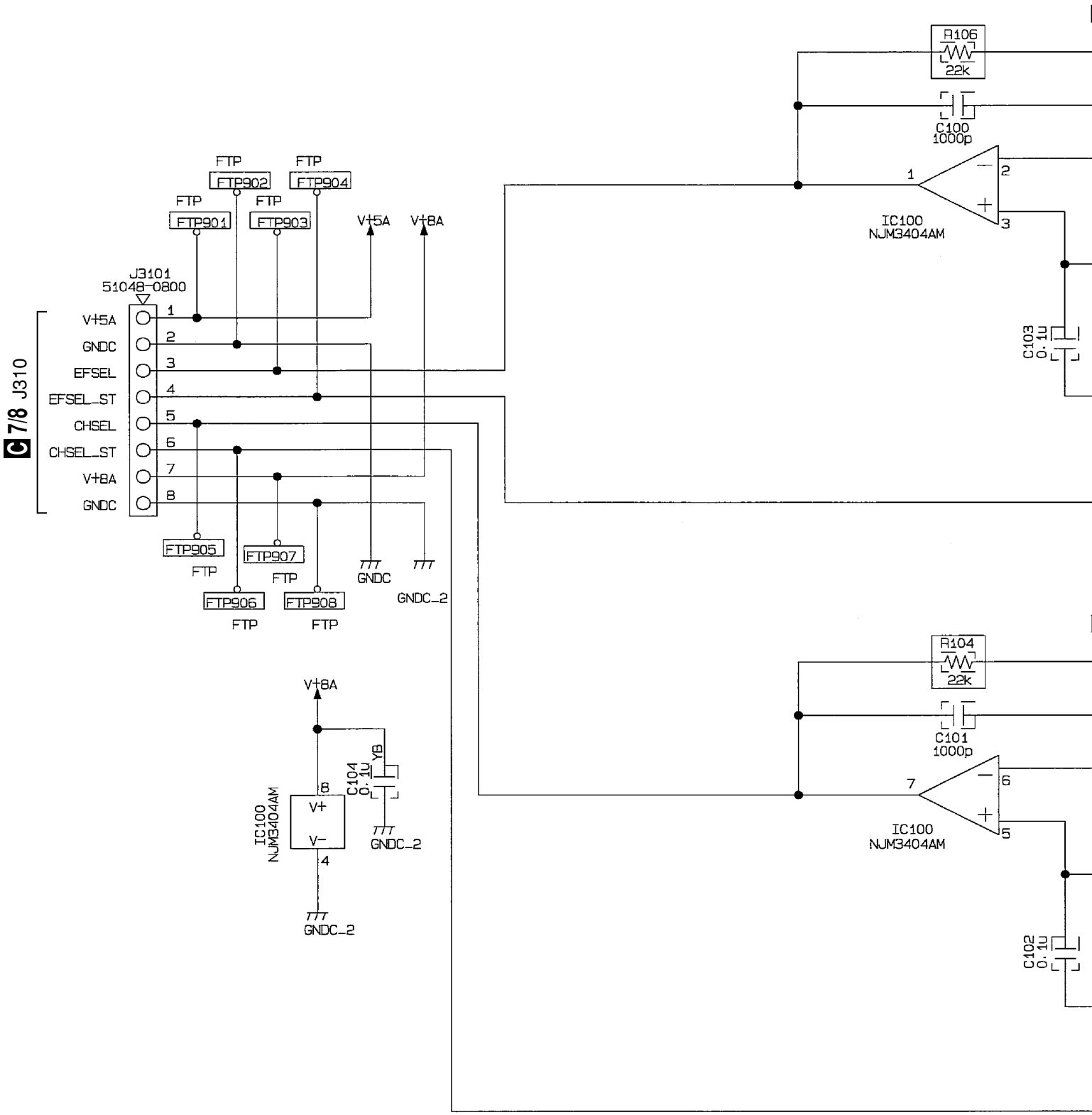

EFFECTS SELECT

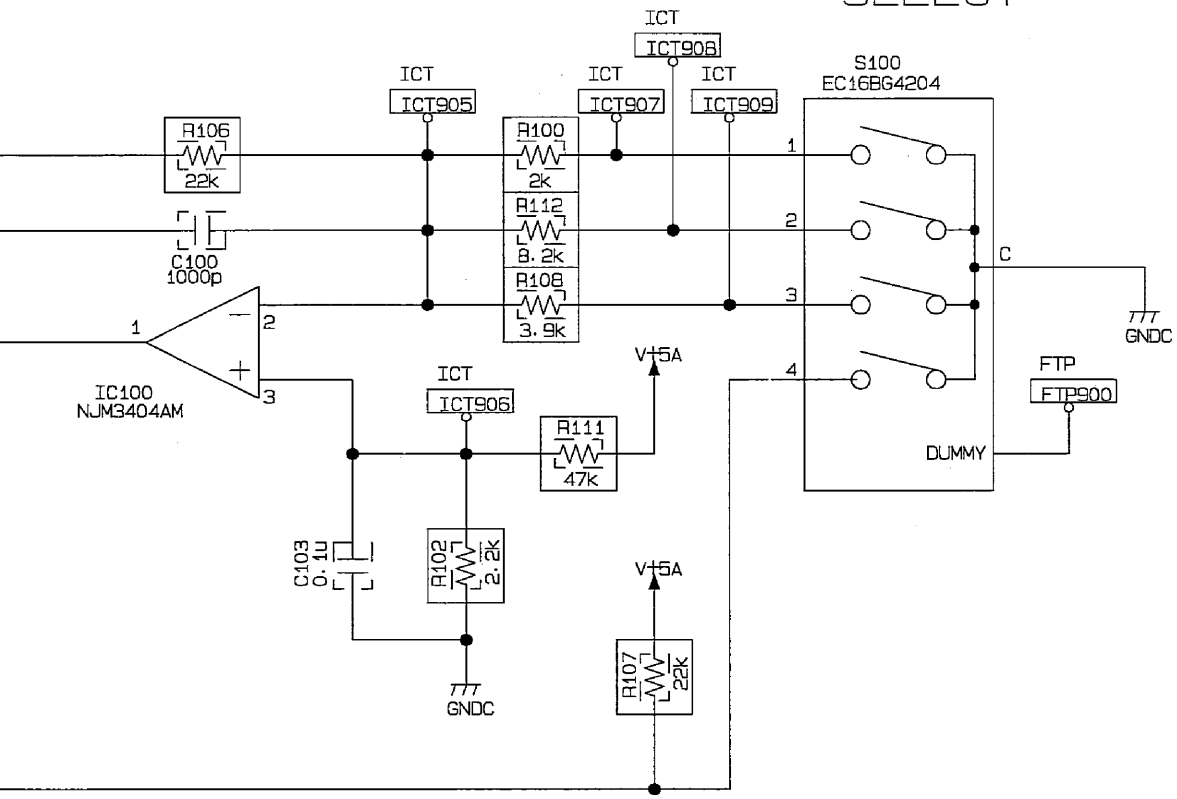

AUTO BPM
DELAY
ECHO
PAN
TRANS
FILTER
FLANGER
REVERS
PITCH
SND/RTN

CH. SELECT

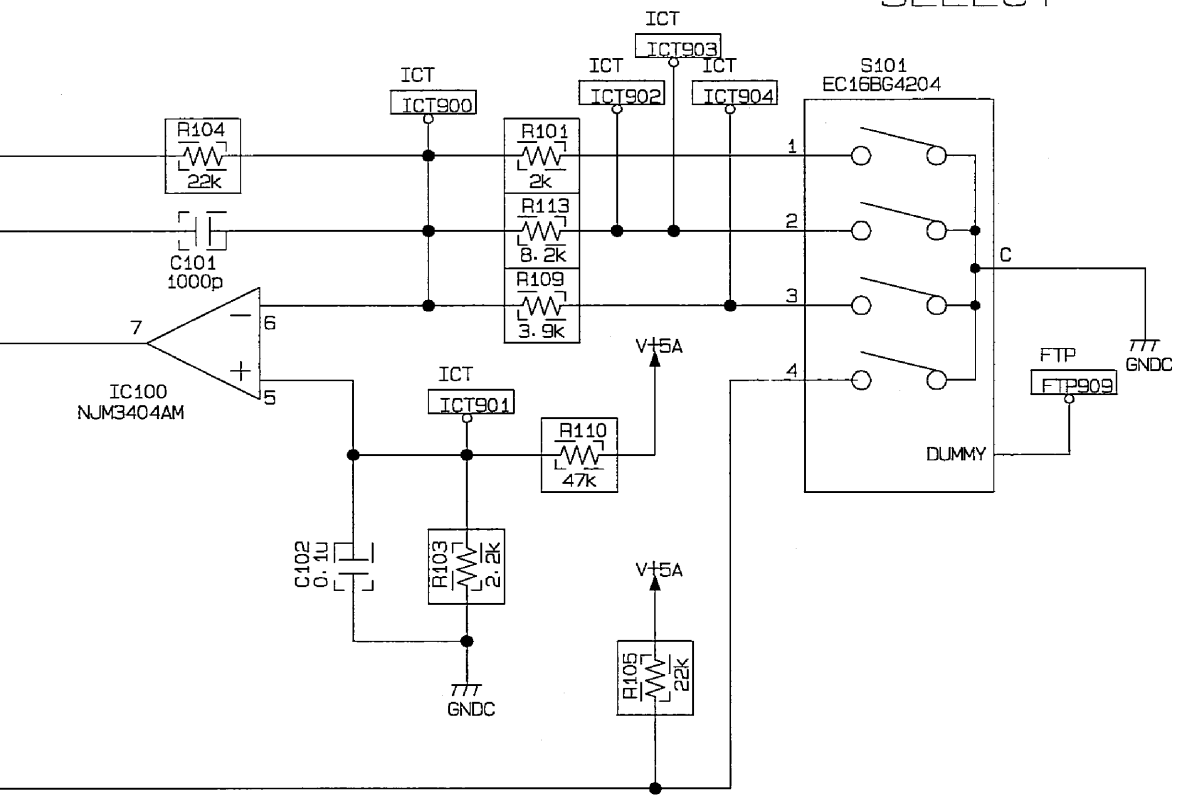

1
2
3
4
MIC1
MIC2
CF.A
CF.B
MASTER

IC100

No.	Voltage (V)
1	1.48
2	0.2
3	0.2
4	0
5	0.2
6	0.2
7	1.47
8	7.9

3.23 LED(1/2) ASSY

K 1/2 LED ASSY (226902720)

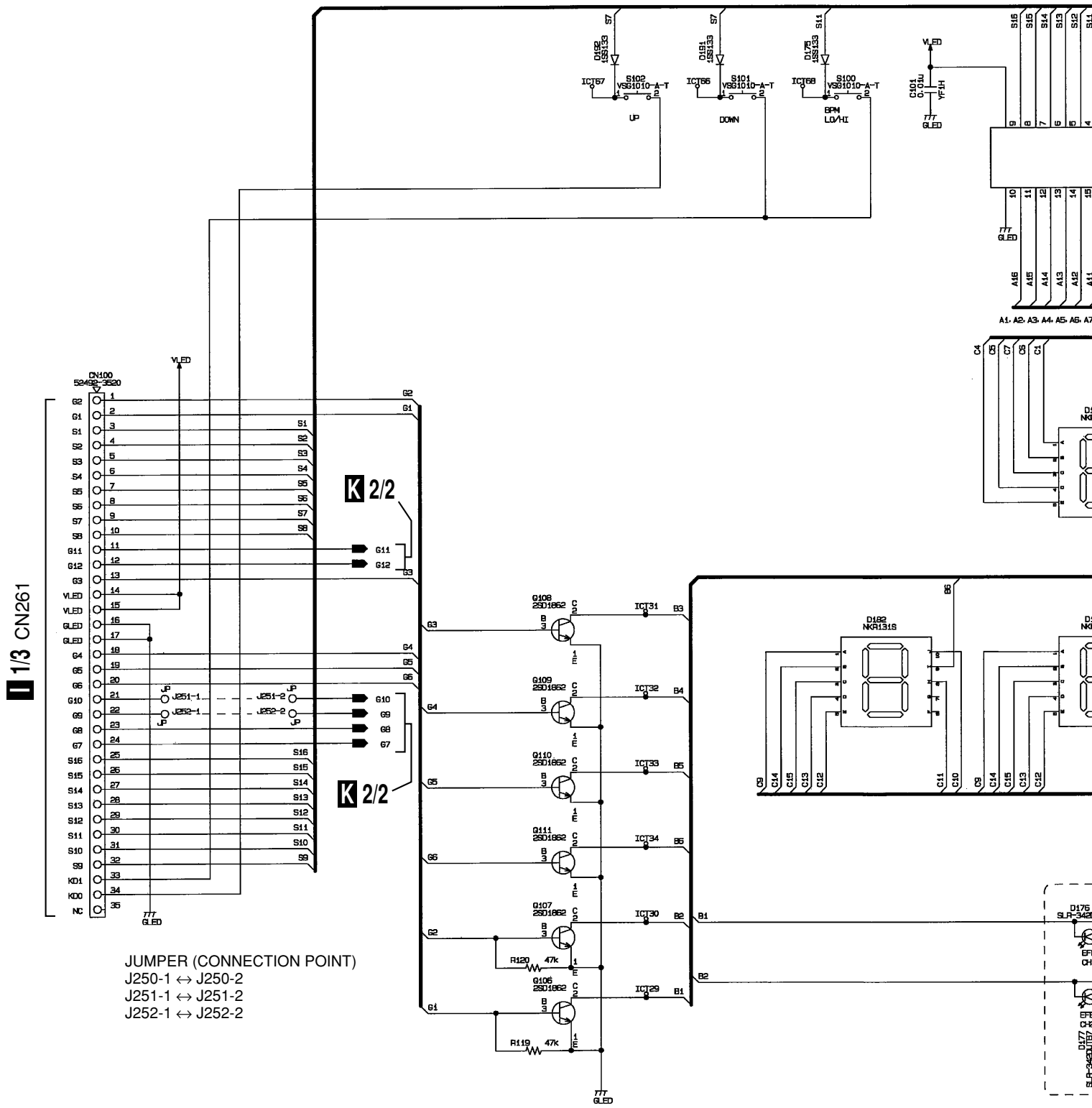

K 1/2

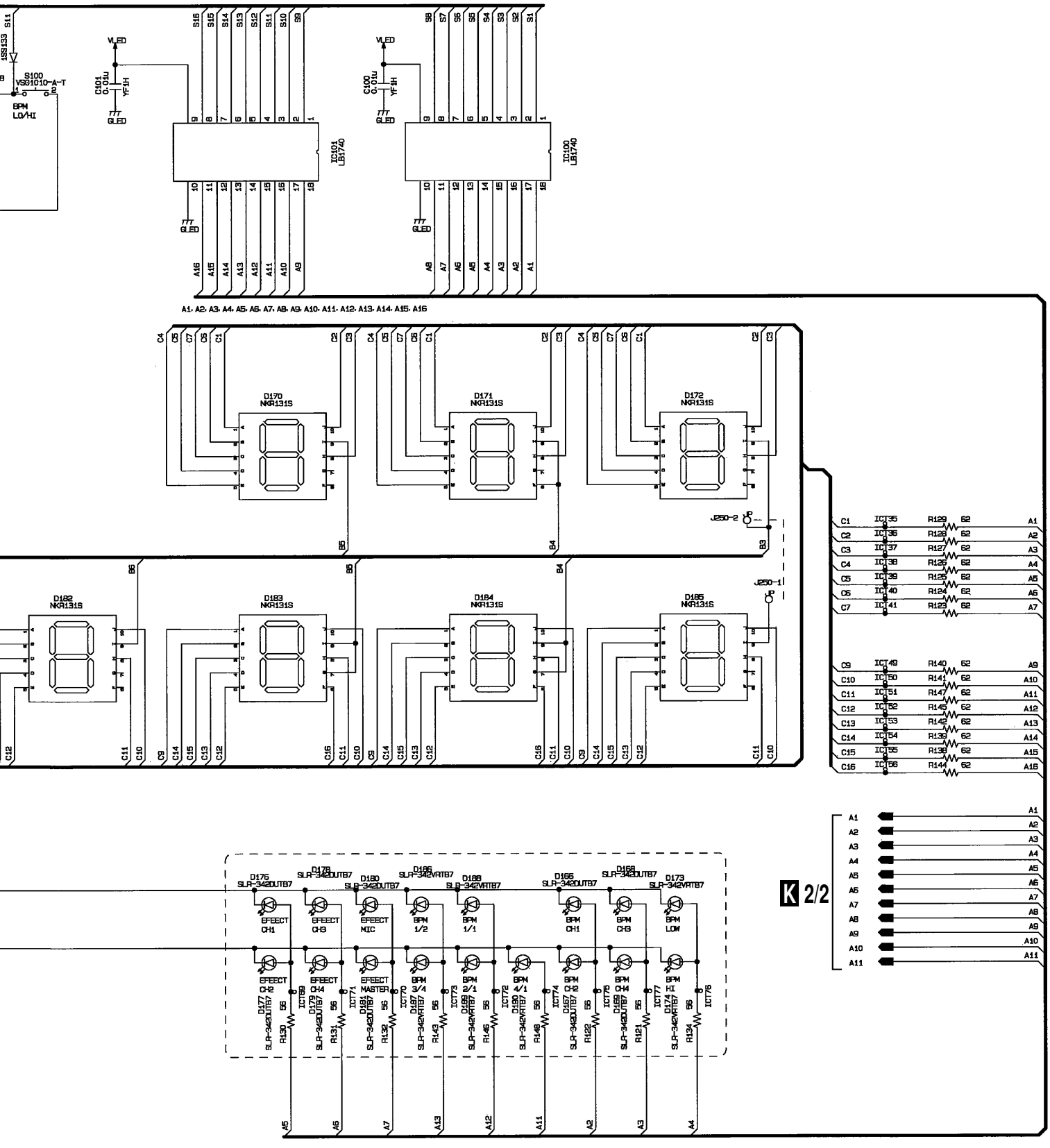
S100
VSR1010-A-T
BPM
LO/HI
VLED
C101
0.01U
YF1H
GLED
IC101
LB1740
IC100
LB1740
A1, A2, A3, A4, A5, A6, A7, A8, A9, A10, A11, A12, A13, A14, A15, A16
D170
NKR131S
D171
NKR131S
D172
NKR131S
D182
NKR131S
D183
NKR131S
D184
NKR131S
D185
NKR131S
J250-2
J250-1
D175
SLR-342OUTB7
D176
SLR-342OUTB7
D178
SLR-342OUTB7
D180
SLR-342OUTB7
D165
SLR-342VRTB7
D166
SLR-342VRTB7
D168
SLR-342OUTB7
D165
SLR-342OUTB7
D166
SLR-342OUTB7
D173
SLR-342VRTB7
EFFECT CH1
EFFECT CH3
EFFECT MIC
BPM 1/2
BPM 1/1
BPM CH1
BPM CH3
BPM LOW
EFFECT CH2
EFFECT CH4
EFFECT MASTER
BPM 3/4
BPM 2/1
BPM 4/1
BPM CH2
BPM CH4
BPM MASTER
K 2/2

3.24 LED(2/2) ASSY

K 2/2 LED ASSY
(226902720)

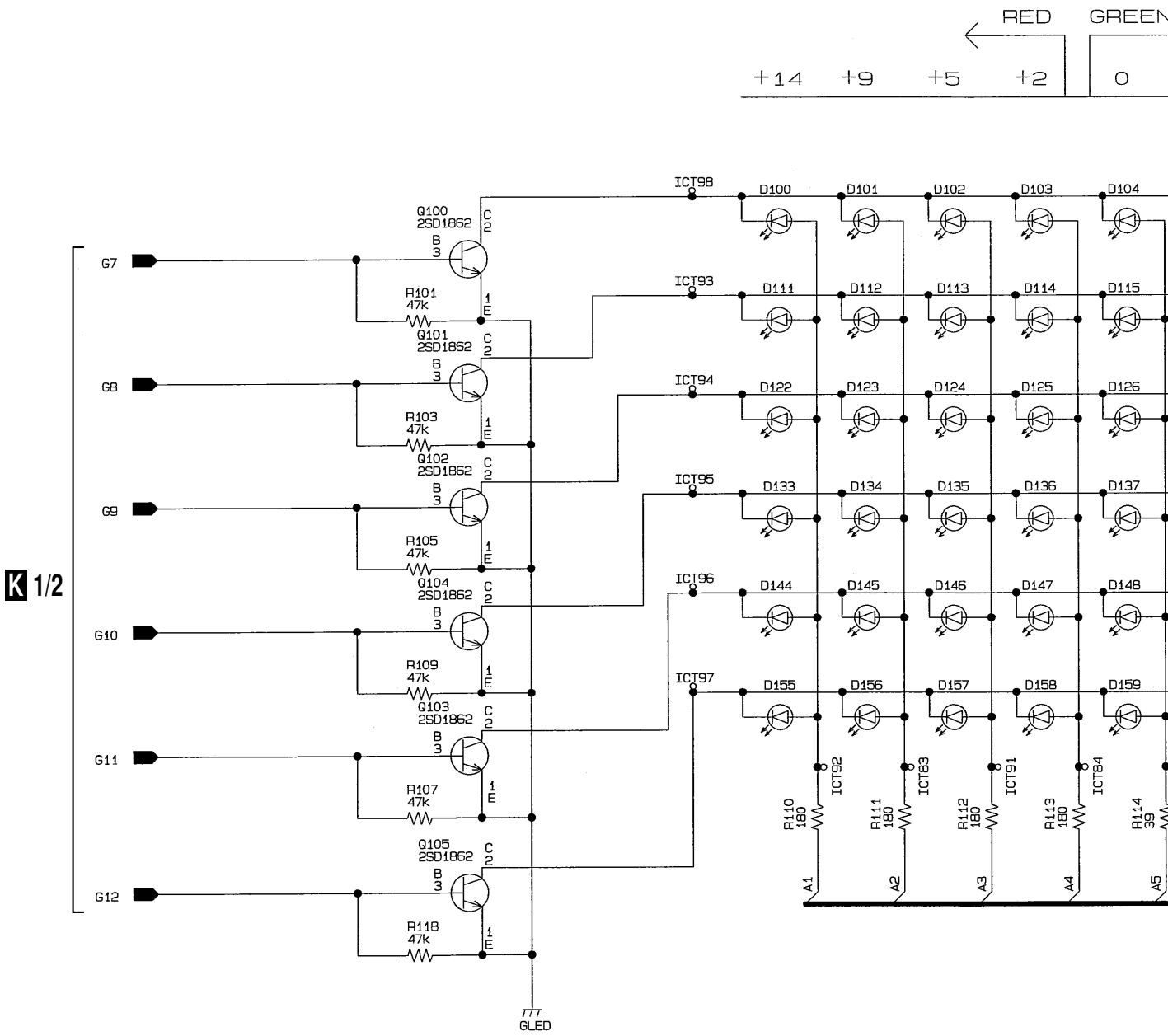

K 2/2

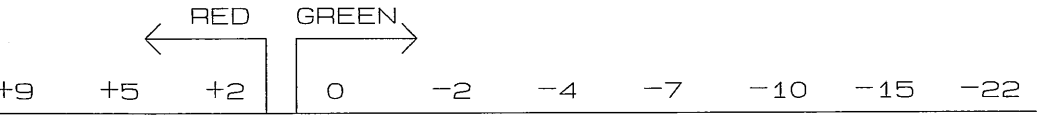
RED
GREEN
+9
+5
+2
0
−2
−4
−7
−10
−15
−22

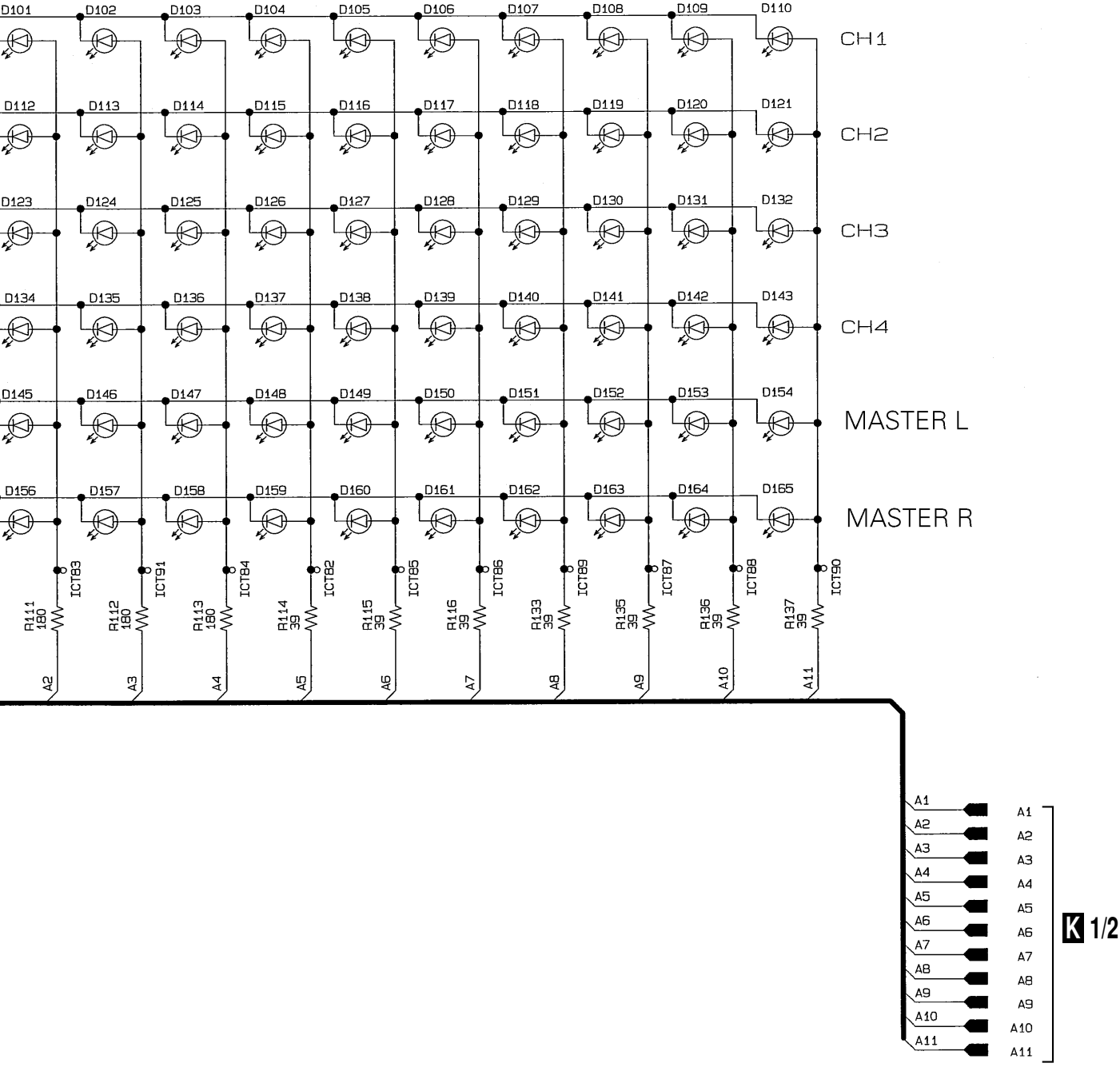
D101 D102 D103 D104 D105 D106 D107 D108 D109 D110
CH1
D112 D113 D114 D115 D116 D117 D118 D119 D120 D121
CH2
D123 D124 D125 D126 D127 D128 D129 D130 D131 D132
CH3
D134 D135 D136 D137 D138 D139 D140 D141 D142 D143
CH4
D145 D146 D147 D148 D149 D150 D151 D152 D153 D154
MASTER L
D156 D157 D158 D159 D160 D161 D162 D163 D164 D165
MASTER R
R111 180 ICT83 A2
R112 180 ICT91 A3
R113 180 ICT84 A4
R114 39 ICT82 A5
R115 39 ICT85 A6
R116 39 ICT86 A7
R133 39 ICT89 A8
R135 39 ICT87 A9
R136 39 ICT88 A10
R137 39 ICT90 A11

A1
A2
A3
A4
A5
A6
A7
A8
A9
A10
A11
K 1/2

K 2/2

3.25 REG, POWER, TRANS and PSW ASSYS

L REG ASSY (226902840)

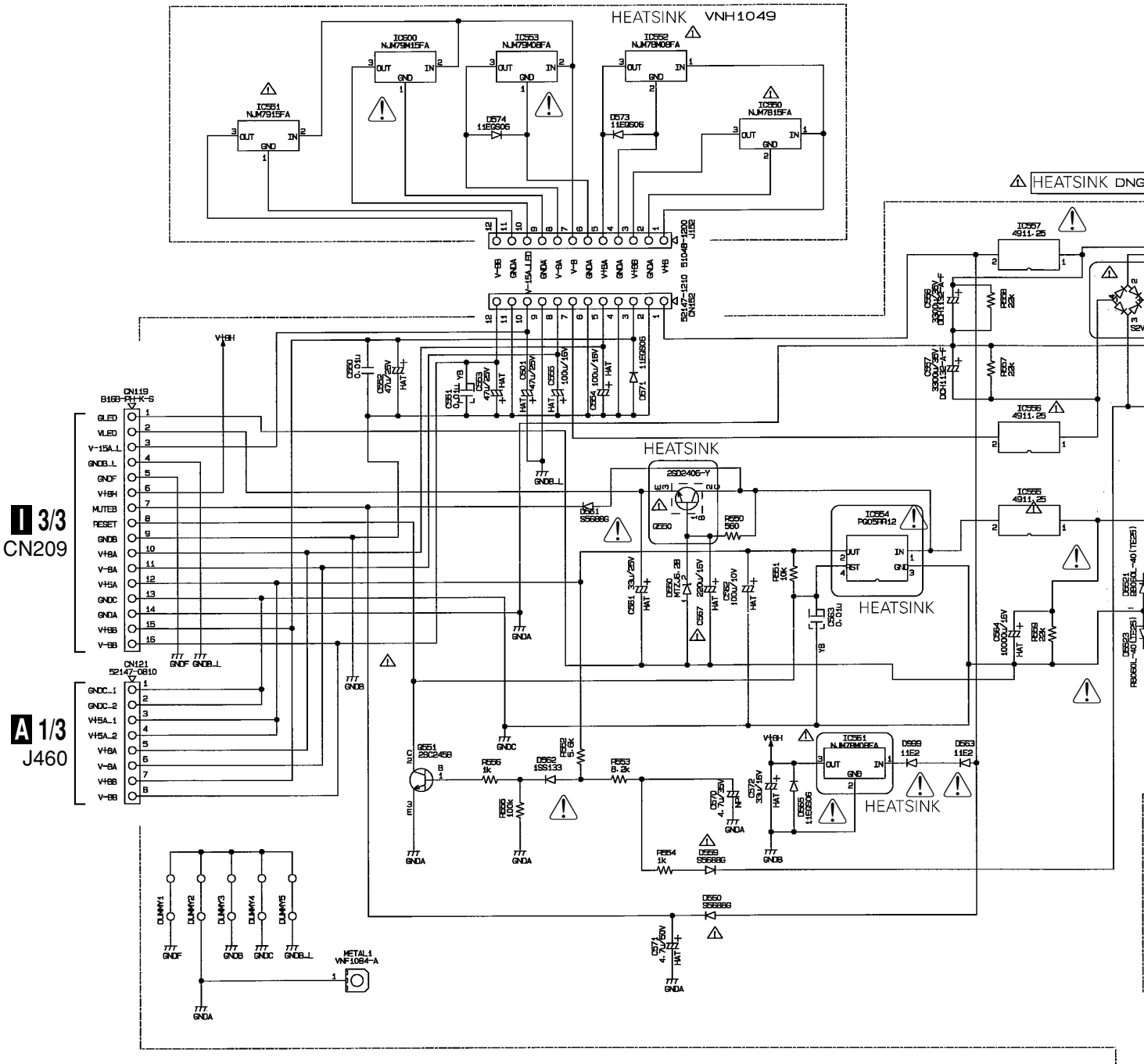

M POWER ASSY
(KUCXCN : 226903790)
(WYXCN, RLBXCN : 226902700)

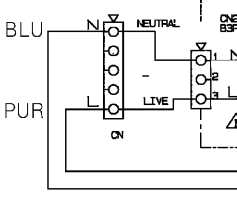

• NOTE FOR FUSE REPLACEMENT

CAUTION - FOR CONTINUED PROTECTION AGAINST RISK OF FIRE.
REPLACE WITH SAME TYPE AND RATINGS ONLY.

L **M**

REG ASSY

IC550

No.	Voltage (V)
1	20.65
2	0
3	14.99

IC551

No.	Voltage (V)
1	0
2	-20.92
3	-15.3

IC552

No.	Voltage (V)
1	20.65
2	0
3	7.97

IC553

No.	Voltage (V)
1	0
2	-20.99
3	-8.1

IC600

No.	Voltage (V)
1	0
2	-20.92
3	-15.2

N TRANS ASSY
(KUCXCN, WYXCN : 226902800)
(RLBXCN : 226902801)

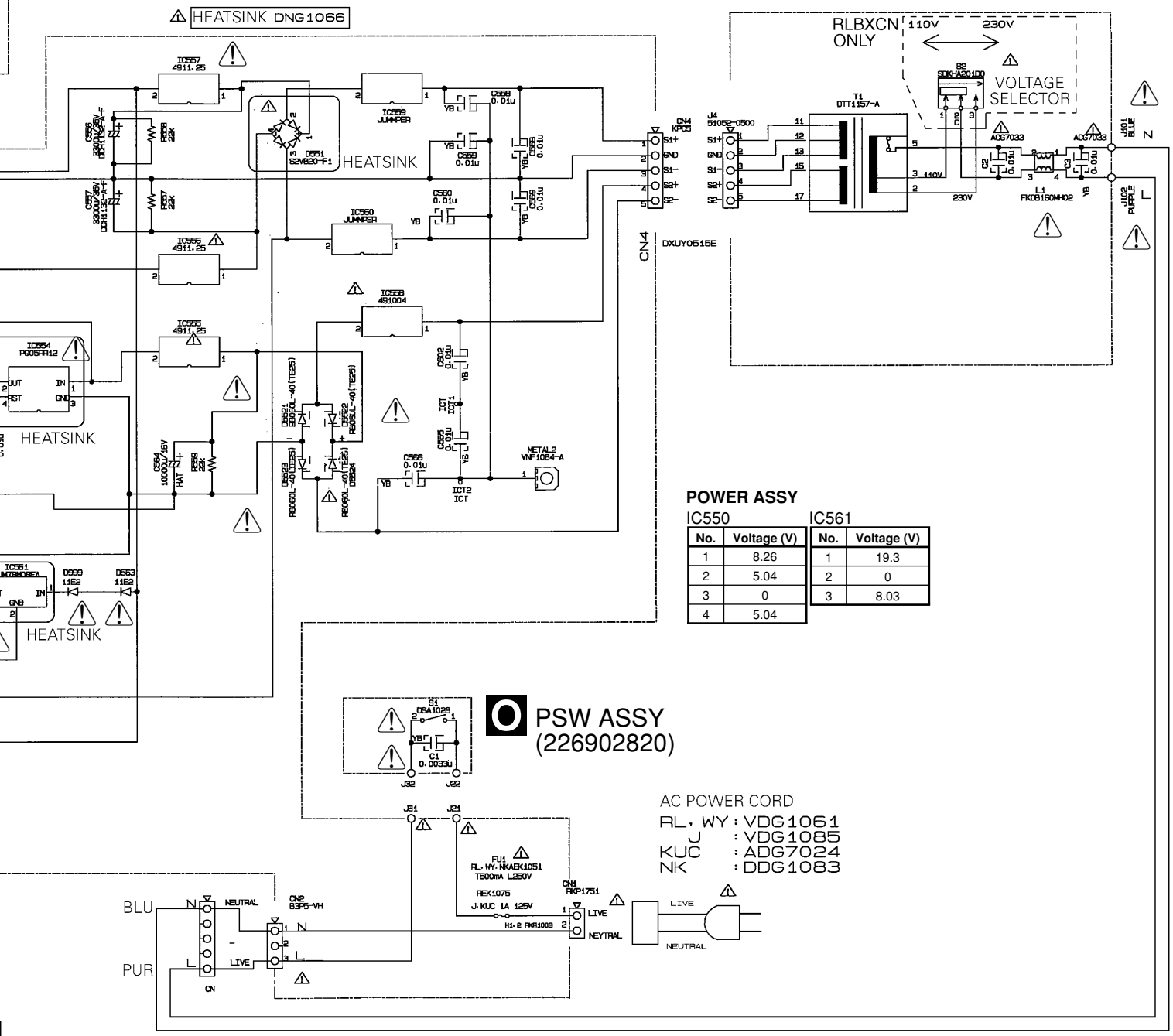

POWER ASSY

IC550

No.	Voltage (V)
1	8.26
2	5.04
3	0
4	5.04

IC561

No.	Voltage (V)
1	19.3
2	0
3	8.03

O PSW ASSY
(226902820)

AC POWER CORD
RL, WY : VDG1061
J : VDG1085
KUC : ADG7024
NK : DDG1083

M N O

WAVEFORMS

Note : The encircled numbers denote measuring point in the schematic diagram.

A TERMA ASSY

1 FTP1
V: 1V/div. H: 200µsec/div.
(at LINE1 0dBV input)

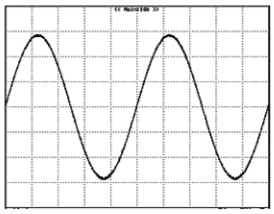

2 CH1LL
V: 0.5V/div. H: 200µsec/div.

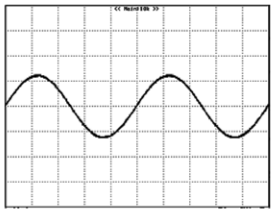

3 MASTER2L
V: 2V/div. H: 200µsec/div.

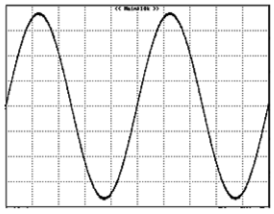

4 FTP81 (MASTER1 OUT L ch)
V: 2V/div. H: 200µsec/div.

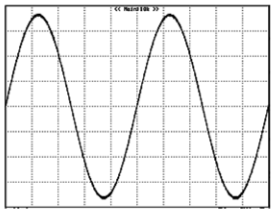

5 FTP5
V: 20V/div. H: 200µsec/div.
(at PHONO1 -40dBV input)

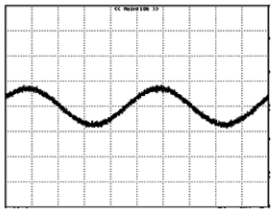

6 CH1PLL
V: 0.2V/div. H: 200µsec/div.

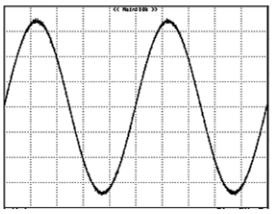

7 FTP108
V: 20V/div. H: 200µsec/div.
(at MIC2 -50dBV input)

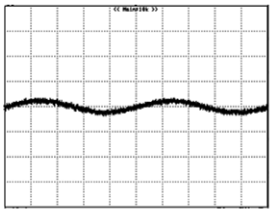

8 MIC2
V: 0.2V/div. H: 200µsec/div.

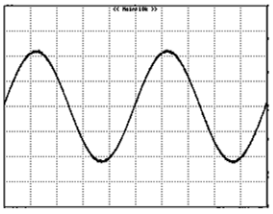

9 FTP113
V: 20V/div. H: 200µsec/div.
(at MIC3 -50dBV input)

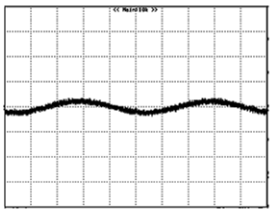

10 C213 – side
V: 0.2V/div. H: 200µsec/div.

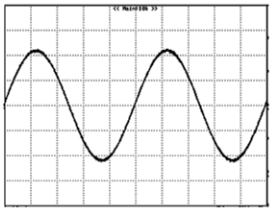

11 RECLA
V: 1V/div. H: 200µsec/div.
(at LINE1 0dBV input)

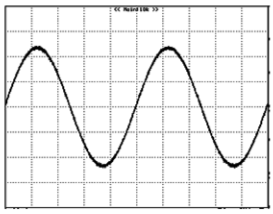

12 FTP147
V: 1V/div. H: 200µsec/div.
(at LINE1 0dBV input)

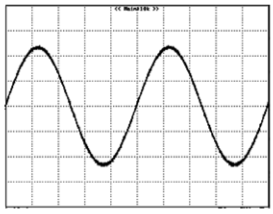

13 FTP156
V: 2V/div. H: 200nsec/div.

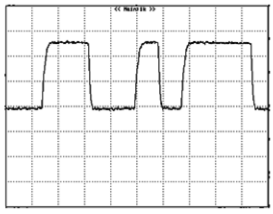

14 FTP159
V: 0.5V/div. H: 200nsec/div.

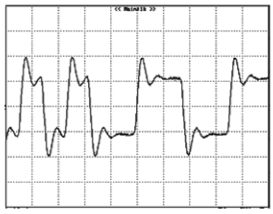

15 FTP159
V: 0.5V/div. H: 200nsec/div.

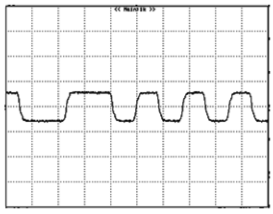

I DSP ASSY

1 FP32 (SENL)
V: 0.5V/div. H: 200µsec/div.

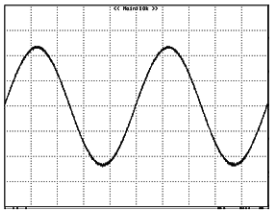

2 IT398 (C204)
V: 2V/div. H: 200µsec/div.

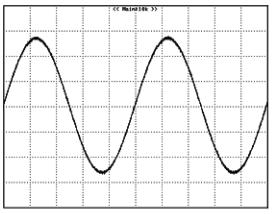

3 AINL +
V: 2V/div. H: 200µsec/div.

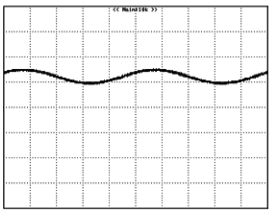

4 IT371 (SGLI)
V: 1V/div. H: 200µsec/div.

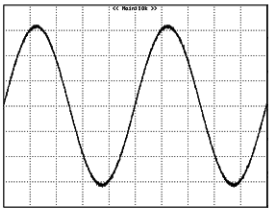

5 IT380 (SGLO)
V: 2V/div. H: 500µsec/div.
(PAN [500] DIPTH max)

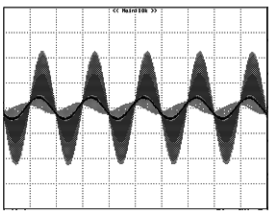

B TERMB ASSY

1 FT74
V: 0.5V/div. H: 200µsec/div.
(at 0dBV input)

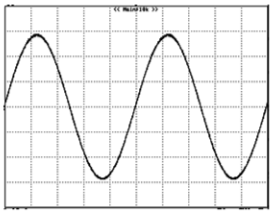

6 FT104
V: 5V/div. H: 200µsec/div.

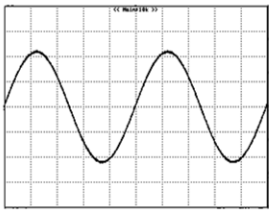

2 RETL
V: 1V/div. H: 200µsec/div.

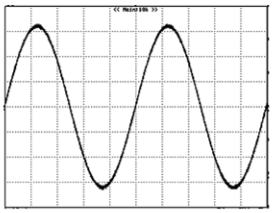

3 FT68
V: 1V/div. H: 200µsec/div.
(at LINE1 0dBV input)

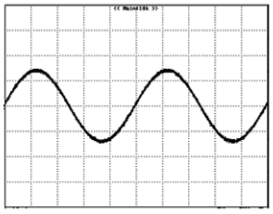

4 SDL
V: 1V/div. H: 200µsec/div.
(at LINE1 0dBV input)

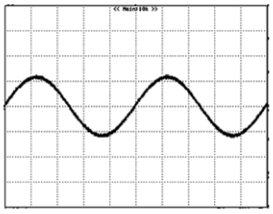

5 FT107
V: 20V/div. H: 200µsec/div.

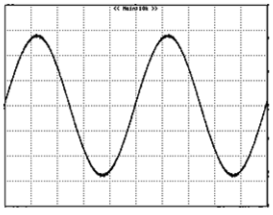

P HP ASSY

1 FTP913 (HSL0)
V: 2V/div. H: 200µsec/div.
(at LINE1 -10dBV input)

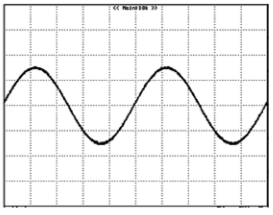

C VR ASSY

1 CFAL
V: 0.5V/div. H: 200µsec/div.

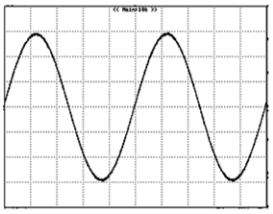

6 CH1LA
V: 0.2V/div. H: 200µsec/div.

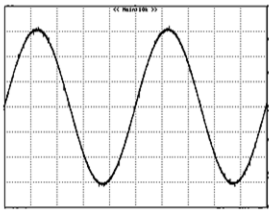

2 ML
V: 1V/div. H: 200µsec/div.

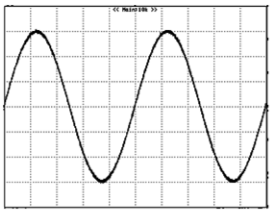

7 CH1L
V: 1V/div. H: 200µsec/div.

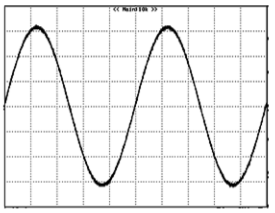

3 MTL1
V: 1V/div. H: 200µsec/div.

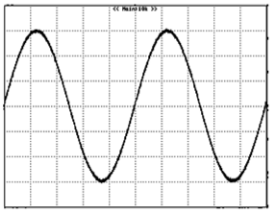

8 MIC1H, L
V: 200mV/div. H: 200µsec/div.
(at -40dBV input)

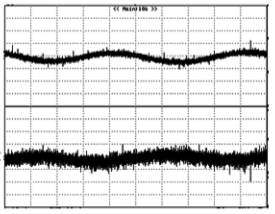

4 MTL
V: 1V/div. H: 200µsec/div.

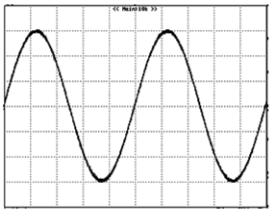

9 MIC
V: 1V/div. H: 200µsec/div.

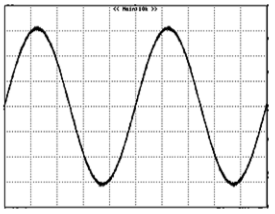

5 HPL1
V: 1V/div. H: 200µsec/div.

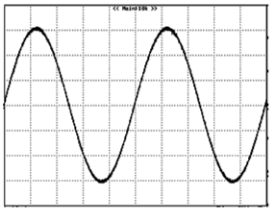

10 SGLI
V: 1V/div. H: 200µsec/div.

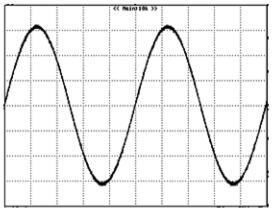

■ VOLTAGES

A TERMA ASSY

IC1

No.	Voltage (V)
1	0
2	0
3	0
4	-8.1
5	0
6	0
7	0
8	7.95

IC2

No.	Voltage (V)
1	0
2	0
3	0
4	-8.1
5	0
6	0
7	0
8	7.94

IC7

No.	Voltage (V)
1	0
2	0
3	0
4	-15.29
5	0
6	0
7	0
8	14.97

IC17

No.	Voltage (V)
1	0
2	0
3	0
4	-15.29
5	0
6	0
7	0
8	14.96

IC18

No.	Voltage (V)
1	1.55
2	1.55
3	1.55
4	-15.29
5	1.55
6	1.55
7	1.55
8	14.96

IC19

No.	Voltage (V)
1	0
2	0
3	0
4	0
5	0
6	0
7	0
8	-15.29
9	0
10	0
11	0
12	0
13	0
14	0
15	0
16	14.96

IC600

No.	Voltage (V)
1	0
2	0
3	0
4	-15.29
5	0
6	0
7	0
8	14.96

B TERMB ASSY

IC8

No.	Voltage (V)
1	2.5
2	2.5
3	2.5
4	0
5	2.48
6	2.48
7	2.48
8	4.99

IC9

No.	Voltage (V)
1	2.5
2	2.5
3	2.5
4	0
5	2.49
6	2.49
7	2.47
8	4.99

IC10

No.	Voltage (V)
1	2.52
2	2.46
3	0
4	0
5	4.99
6	2.53
7	2.53
8	4.99

IC12

No.	Voltage (V)
1	4.99
2	2.46
3	4.99
4	4.99
5	4.99
6	4.99
7	4.99
8	0
9	4.99
10	4.99
11	2.49
12	2.49
13	2.49
14	2.48
15	0
16	4.99

IC13

No.	Voltage (V)
1	4.99
2	2.46
3	4.99
4	4.99
5	4.99
6	4.99
7	0
8	0
9	4.99
10	0
11	2.49
12	2.49
13	2.49
14	2.49
15	0
16	4.99

IC14

No.	Voltage (V)
1	2.46
2	2.5
3	2.35
4	4.98
5	0
6	2.47
7	2.5
8	0
9	4.99
10	0
11	0
12	4.99
13	0
14	0
15	0
16	4.99
17	2.46
18	2.48
19	2.49
20	4.99
21	1.58
22	0
23	0
24	4.99

IC15

No.	Voltage (V)
1	0
2	0
3	0
4	2.49
5	2.48
6	1.58
7	0
8	0
9	4.99
10	0
11	0
12	0
13	2.46
14	0
15	2.43
16	2.38
17	0
18	0
19	4.99
20	0
21	0
22	0
23	0
24	2.49
25	0
26	0
27	0
28	4.99

IC16

No.	Voltage (V)
1	0
2	4.99
3	0
4	4.99
5	0
6	4.99
7	0
8	2.49
9	2.49
10	4.99
11	0
12	4.99
13	0
14	4.99

IC101

No.	Voltage (V)
1	0
2	0
3	0
4	-15.28
5	0
6	0
7	0
8	14.97

IC102

No.	Voltage (V)
1	0
2	0
3	0
4	-15.29
5	0
6	0
7	0
8	14.97

IC107

No.	Voltage (V)
1	0
2	0
3	0
4	0
5	7.93
6	-
7	-8.11
8	-
9	-
10	-
11	-
12	-
13	7.93
14	7.95

IC500

No.	Voltage (V)
1	0
2	5.02
3	5
4	0
5	4.97
6	0
7	0
8	4.99
9	0
10	0
11	5
12	5.02
13	0
14	5.02

IC502

No.	Voltage (V)
1	0
2	0
3	0
4	0
5	0
6	0
7	0
8	0
9	0
10	0
11	0
12	0
13	0
14	5.02

IC503

No.	Voltage (V)
1	0
2	0
3	0
4	-15.29
5	0
6	0
7	0
8	14.96

IC505

No.	Voltage (V)
1	0
2	0
3	0
4	-15.29
5	0
6	0
7	0
8	14.96

IC507

No.	Voltage (V)
1	0
2	5.02
3	4.99
4	5.02
5	0
6	0
7	4.99
8	0
9	0
10	5.02
11	4.99
12	5.02
13	0
14	0
15	4.99
16	5.02

C VR ASSY

IC1

No.	Voltage (V)
1	-15.25
2	0
3	0
4	0
5	0
6	0
7	0
8	0
9	0
10	0
11	0
12	0
13	0
14	0
15	5
16	0
17	0
18	0
19	0
20	0
21	0
22	0
23	0
24	0
25	0
26	0
27	0
28	14.92

IC3

No.	Voltage (V)
1	-15.24
2	-
3	-
4	-14.99
5	-14.98
6	4.97
7	0
8	0
9	0
10	0
11	0
12	0
13	0
14	0
15	5
16	0
17	0
18	0
19	0
20	0
21	0
22	0
23	4.97
24	4.85
25	4.85
26	-8.08
27	-8.08
28	14.91

IC4

No.	Voltage (V)
1	7.94
2	0.29
3	0
4	0
5	0
6	0
7	-
8	0
9	0
10	-
11	0
12	-8.09
13	-8.09
14	0
15	0.29
16	7.94

IC5

No.	Voltage (V)
1	-15.25
2	0
3	0
4	0
5	0
6	0
7	0
8	0
9	0
10	0
11	0
12	0
13	0
14	0
15	5
16	0
17	0
18	0
19	0
20	0
21	0
22	0
23	0
24	0
25	0
26	0
27	0
28	14.92

IC6

No.	Voltage (V)
1	0
2	0
3	0
4	-15.24
5	0
6	0
7	0
8	14.9

IC9

No.	Voltage (V)
1	0
2	0
3	0
4	-15.25
5	0
6	0
7	0
8	14.93

IC10

No.	Voltage (V)
1	0
2	0
3	0
4	-15.24
5	0
6	0
7	0
8	14.92

IC11

No.	Voltage (V)
1	0
2	0
3	0
4	-15.25
5	0
6	0
7	0
8	14.92

IC12

No.	Voltage (V)
1	0
2	4.97
3	0
4	0
5	0
6	0
7	0
8	-15.26
9	-
10	0
11	-
12	0
13	-
14	0
15	-
16	14.92

IC13

No.	Voltage (V)
1	0
2	0
3	0
4	-15.23
5	0
6	0
7	0
8	14.9

IC16

No.	Voltage (V)
1	0
2	0
3	0
4	-15.24
5	0
6	0
7	0
8	14.89

IC17

No.	Voltage (V)
1	-15.25
2	0
3	0
4	0
5	0
6	0
7	0
8	0
9	0
10	0
11	0
12	0
13	0
14	0
15	5.01
16	0
17	0
18	0
19	0
20	0
21	0
22	0
23	0
24	0
25	0
26	0
27	0
28	14.93

IC18

No.	Voltage (V)
1	0
2	0
3	0
4	-8.08
5	0
6	0
7	0
8	7.95

IC19

No.	Voltage (V)
1	0
2	0
3	0
4	-8.08
5	0
6	0
7	0
8	7.95

IC20

No.	Voltage (V)
1	0
2	0
3	0
4	0
5	0
6	0
7	0
8	-8.09
9	0
10	0
11	0
12	0
13	0
14	0
15	0
16	7.95

IC21

No.	Voltage (V)
1	0
2	0
3	0
4	-15.24
5	0
6	0
7	0
8	14.92

IC23

No.	Voltage (V)
1	0
2	0
3	0
4	-15.24
5	0
6	0
7	0
8	14.88

IC24

No.	Voltage (V)
1	0
2	0
3	0
4	-15.24
5	0
6	0
7	0
8	14.88

IC25

No.	Voltage (V)
1	0
2	0
3	0
4	-8.08
5	0
6	0
7	0
8	7.95

IC27

No.	Voltage (V)
1	0
2	0
3	0
4	-8.09
5	0
6	0
7	0
8	8.02

IC28

No.	Voltage (V)
1	0
2	0
3	0
4	-15.24
5	0
6	0
7	0
8	14.89

IC29

No.	Voltage (V)
1	0
2	0
3	0
4	-15.24
5	0
6	0
7	0
8	14.89

IC30

No.	Voltage (V)
1	0
2	0
3	0
4	-15.24
5	0
6	0
7	0
8	14.89

IC31

No.	Voltage (V)
1	0
2	0
3	0
4	-15.24
5	0
6	0
7	0
8	14.89

IC32

No.	Voltage (V)
1	0
2	0
3	0
4	-15.24
5	0
6	0
7	0
8	14.89

IC43

No.	Voltage (V)
1	-15.24
2	0
3	0
4	0
5	0
6	0
7	0
8	0
9	0
10	0
11	0
12	0
13	0
14	0
15	5
16	0
17	0
18	0
19	0
20	0
21	0
22	0
23	0
24	0
25	0
26	0
27	0
28	14.9

IC44

No.	Voltage (V)
1	-15.24
2	0
3	0
4	0
5	0
6	0
7	0
8	0
9	0
10	0
11	0
12	0
13	0
14	0
15	5
16	0
17	0
18	0
19	0
20	0
21	0
22	0
23	0
24	0
25	0
26	0
27	0
28	14.9

IC45

No.	Voltage (V)
1	0
2	0
3	0
4	-15.25
5	0
6	0
7	0
8	14.9

IC54

No.	Voltage (V)
1	0
2	0
3	0
4	-15.24
5	0
6	0
7	0
8	14.89

IC55

No.	Voltage (V)
1	0
2	0
3	0
4	-15.24
5	0
6	0
7	0
8	14.89

IC56

No.	Voltage (V)
1	0
2	0
3	0
4	-15.24
5	0
6	0
7	0
8	14.9

IC59

No.	Voltage (V)
1	0
2	0
3	0
4	-15.24
5	0
6	0
7	0
8	14.91

IC63

No.	Voltage (V)
1	4.28
2	-
3	-8.09
4	-8.1
5	-
6	-8.1
7	-8.1
8	-8.1
9	7.9
10	7.9
11	7.9
12	-8.09
13	-4.5
14	-4.46
15	4.3
16	7.94

IC64

No.	Voltage (V)
1	0.3
2	-
3	-8.1
4	-8.1
5	-
6	-8.1
7	-8.1
8	-8.1
9	7.8
10	7.8
11	7.9
12	-8.09
13	0
14	0
15	0
16	7.93

IC65

No.	Voltage (V)
1	4.29
2	0
3	0
4	-8.1
5	0
6	0
7	0
8	4.98

IC66

No.	Voltage (V)
1	-15.24
2	0
3	0
4	0
5	0
6	0
7	0
8	0
9	0
10	0
11	0
12	0
13	0
14	0
15	5
16	0
17	0
18	0
19	0
20	0
21	0
22	0
23	0
24	0
25	0
26	0
27	0
28	14.91

IC67

No.	Voltage (V)
1	0
2	0
3	0
4	-15.26
5	0
6	0
7	0
8	14.92

IC71

No.	Voltage (V)
1	7.92
2	2.47
3	3.72
4	0
5	1.23
6	2.47
7	0
8	4.98

IC72

No.	Voltage (V)
1	0
2	0
3	0
4	-15.24
5	0
6	0
7	0
8	14.9

IC74

No.	Voltage (V)
1	0
2	0
3	0
4	-15.24
5	0
6	0
7	0
8	14.89

IC76

No.	Voltage (V)
1	1.2 to 2
2	0
3	1.2 to 2
4	0
5	0
6	0
7	0
8	1 to 2
9	0
10	0
11	0
12	0
13	0
14	4.96

IC78

No.	Voltage (V)
1	5.01
2	0
3	4.96
4	-
5	-
6	4.96
7	0
8	0
9	0.3
10	0
11	4.96
12	-
13	-
14	4.96
15	0
16	4.96

IC700

No.	Voltage (V)
1	0
2	0
3	0
4	0
5	0
6	0
7	0
8	-15.24
9	0
10	0
11	0
12	7.92
13	0
14	0
15	0
16	14.89

IC703

No.	Voltage (V)
1	0
2	0
3	0
4	-15.24
5	0
6	0
7	0
8	14.9

IC704

No.	Voltage (V)
1	0
2	0
3	0
4	-15.24
5	0
6	0
7	0
8	14.9

DSP ASSY

IC108

No.	Voltage (V)	No.	Voltage (V)	No.	Voltage (V)	No.	Voltage (V)
1	0 to 5.06	21	0 to 5.06	41	0 to 5.06	61	0 to 5.06
2	0 to 5.06	22	0 to 5.06	42	0 to 5.06	62	0 to 5.06
3	0 to 5.06	23	0 to 5.06	43	0 to 5.06	63	0 to 5.06
4	0 to 5.06	24	0 to 5.06	44	0 to 5.06	64	0 to 5.06
5	0 to 5.06	25	0 to 5.06	45	0 to 5.06	65	0 to 5.06
6	0 to 5.06	26	0 to 5.06	46	0 to 5.06	66	0 to 5.06
7	0 to 5.06	27	0 to 5.06	47	0 to 5.06	67	0 to 5.06
8	5.06	28	0 to 5.06	48	0	68	0 to 5.06
9	0 to 5.06	29	5.06	49	0 to 5.06	69	0 to 5.06
10	0 to 5.06	30	5.06	50	0 to 5.06	70	0 to 5.06
11	0 to 5.06	31	0	51	0 to 5.06	71	0
12	0 to 5.06	32	0 to 5.06	52	5.06	72	0 to 5.06
13	0 to 5.06	33	0	53	0 to 5.06	73	0 to 5.06
14	0 to 5.06	34	0 to 5.06	54	0 to 5.06	74	0 to 5.06
15	0 to 5.06	35	0 to 5.06	55	0 to 5.06	75	0 to 5.06
16	0 to 5.06	36	0 to 5.06	56	0 to 5.06	76	0 to 5.06
17	0 to 5.06	37	0 to 5.06	57	0 to 5.06	77	0 to 5.06
18	0 to 5.06	38	0 to 5.06	58	0 to 5.06	78	0 to 5.06
19	0 to 5.06	39	0 to 5.06	59	0 to 5.06	79	0 to 5.06
20	0	40	0 to 5.06	60	0 to 5.06	80	0 to 5.06

IC119

No.	Voltage (V)	No.	Voltage (V)	No.	Voltage (V)	No.	Voltage (V)
1	3.45	26	0 to 3.45	51	0 to 3.45	76	0 to 3.45
2	0	27	0 to 3.45	52	0 to 3.45	77	0 to 3.45
3	3.45	28	0	53	0 to 3.45	78	0 to 3.45
4	0 to 3.45	29	0 to 3.45	54	0 to 3.45	79	3.45
5	0	30	0	55	3.45	80	0
6	0 to 3.45	31	3.45	56	0	81	0 to 3.45
7	0	32	0 to 3.45	57	0 to 3.45	82	0 to 3.45
8	3.45	33	0	58	0 to 3.45	83	0 to 3.45
9	0	34	3.45	59	0 to 3.45	84	0 to 3.45
10	2.5	35	3.45	60	0 to 3.45	85	0
11	3.45	36	0	61	3.45	86	0
12	0	37	3.45	62	0	87	3.45
13	0	38	0	63	3.45	88	0
14	0 to 3.45	39	0 to 3.45	64	0	89	3.45
15	3.45	40	0 to 3.45	65	0	90	0
16	0	41	0 to 3.45	66	3.45	91	0
17	0	42	3.45	67	0	92	3.45
18	0	43	0	68	0	93	0
19	0	44	0	69	0	94	0
20	0 to 3.45	45	0 to 3.45	70	0	95	0
21	3.45	46	0 to 3.45	71	3.45	96	0
22	0	47	0 to 3.45	72	0	97	0
23	5	48	3.45	73	0	98	1.7
24	0 to 3.45	49	0	74	0	99	1.7
25	0 to 3.45	50	0 to 3.45	75	0 to 3.45	100	3.45

IC101

No.	Voltage (V)
1	0
2	0
3	0
4	-15.13
5	15.12
6	0
7	0
8	14.93

IC102

No.	Voltage (V)
1	0.35
2	0.35
3	0.35
4	-15.12
5	0.35
6	0.35
7	0.35
8	14.92

IC105

No.	Voltage (V)
1	0.35
2	0.35
3	0.35
4	-15.13
5	0.35
6	0.35
7	0.35
8	14.92

IC106

No.	Voltage (V)
1	0.35
2	0.35
3	0.35
4	-15.13
5	0.35
6	0.35
7	0.35
8	14.91

IC109

No.	Voltage (V)
1	2.5
2	1.5
3	1.51
4	1.68
5	2.54
6	0
7	0
8	0
9	4.18
10	4.18
11	4.18
12	3.04
13	0
14	0
15	2.33
16	5.04

IC110

No.	Voltage (V)
1	0
2	0
3	0
4	0
5	0
6	0
7	0
8	0
9	4.2
10	4.2
11	4.2
12	0
13	0
14	0
15	0
16	5.04

IC111

No.	Voltage (V)
1	5.05
2	0 to 5.05
3	0 to 5.05
4	5.05
5	0 to 5.05
6	0
7	0
8	0
9	0
10	5.05
11	0
12	0
13	5.05
14	5.05

IC113

No.	Voltage (V)
1	3.45
2	0
3	0
4	0
5	0
6	3.45
7	3.45
8	0
9	3.45
10	3.45
11	3.45
12	3.45
13	3.45
14	3.45
15	0
16	3.45
17	3.45
18	3.45
19	3.45
20	3.45
21	3.45
22	3.45
23	3.45
24	0
25	0
26	0
27	0
28	0

IC114

No.	Voltage (V)
1	1.72
2	2.52
3	1.72
4	2.52
5	0
6	0
7	0
8	0
9	0
10	0
11	0
12	0
13	0
14	5.04

IC116

No.	Voltage (V)
1	2.48
2	2.48
3	2.48
4	0
5	2.5
6	2.5
7	2.5
8	4.98

IC115

No.	Voltage (V)
1	-15
2	0
3	0
4	0
5	0
6	0
7	0
8	0
9	0
10	0
11	0
12	0
13	0.5
14	0
15	5
16	0.6
17	0
18	0
19	0
20	0
21	0
22	0
23	0
24	0
25	0
26	0
27	0
28	14.96

IC122

No.	Voltage (V)
1	4.96
2	0
3	2.48
4	2.48
5	2.48
6	2.48
7	4.96
8	0
9	0
10	4.96
11	5.06
12	5.06
13	5.06
14	0
15	2.48
16	5.06
17	0
18	0
19	0
20	0
21	5.06
22	0
23	5.06
24	5.06
25	5.06
26	4.06
27	4.06
28	2.48

IC600

No.	Voltage (V)
1	0
2	0
3	5.01
4	5.01
5	5.01
6	0
7	0
8	0
9	4.21
10	0
11	0
12	0
13	0
14	0
15	0
16	5.06

4. PCB CONNECTION DIAGRAM

NOTE FOR PCB DIAGRAMS :

1. Part numbers in PCB diagrams match those in the schematic diagrams.
2. A comparison between the main parts of PCB and schematic diagrams is shown below.

Symbol In PCB Diagrams	Symbol In Schematic Diagrams	Part Name
B C E	B C E B C E	Transistor
B C E	B C E B C E	Transistor with resistor
D G S	D G S D G S	Field effect transistor
		Resistor array
		3-terminal regulator

3. The parts mounted on this PCB include all necessary parts for several destinations.
   For further information for respective destinations, be sure to check with the schematic diagram.
4. View point of PCB diagrams.

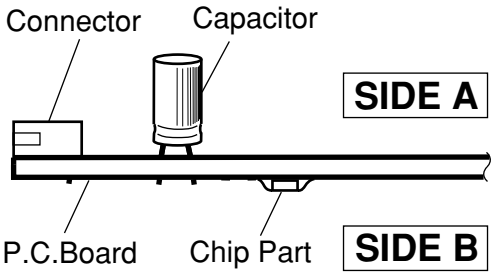

4.1 CF and MAF ASSYS

SIDE A **SIDE B**

D CF ASSY(226902960)

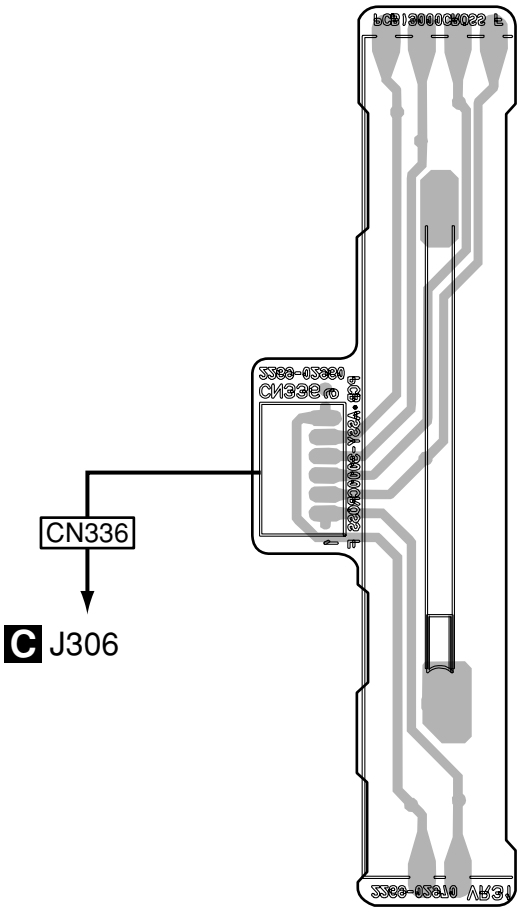

D CF ASSY(226902960)

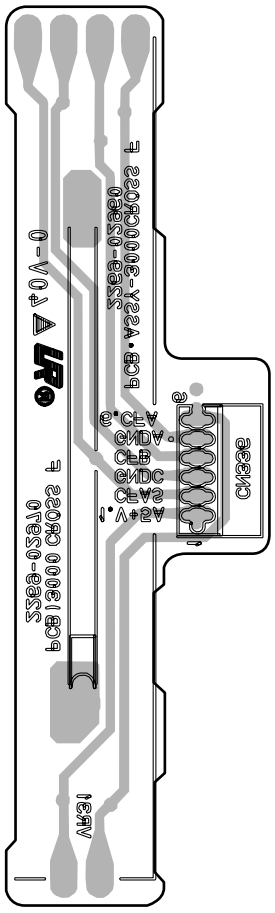

F MAF ASSY(226902940)

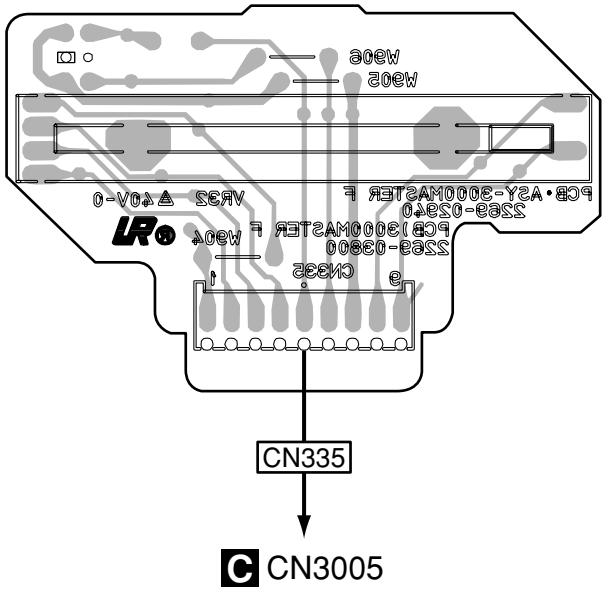

F MAF ASSY(226902940)

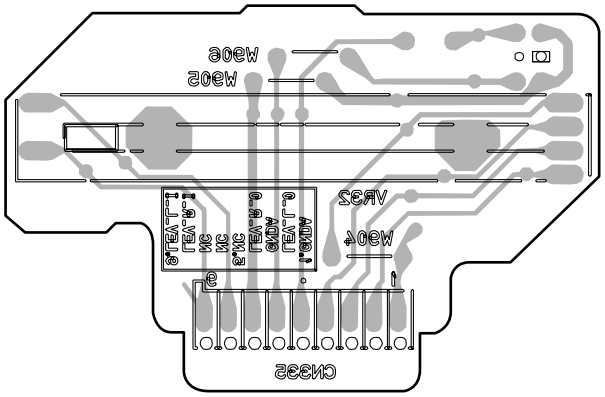

D **F**

4.2 TERMA ASSY

SIDE A

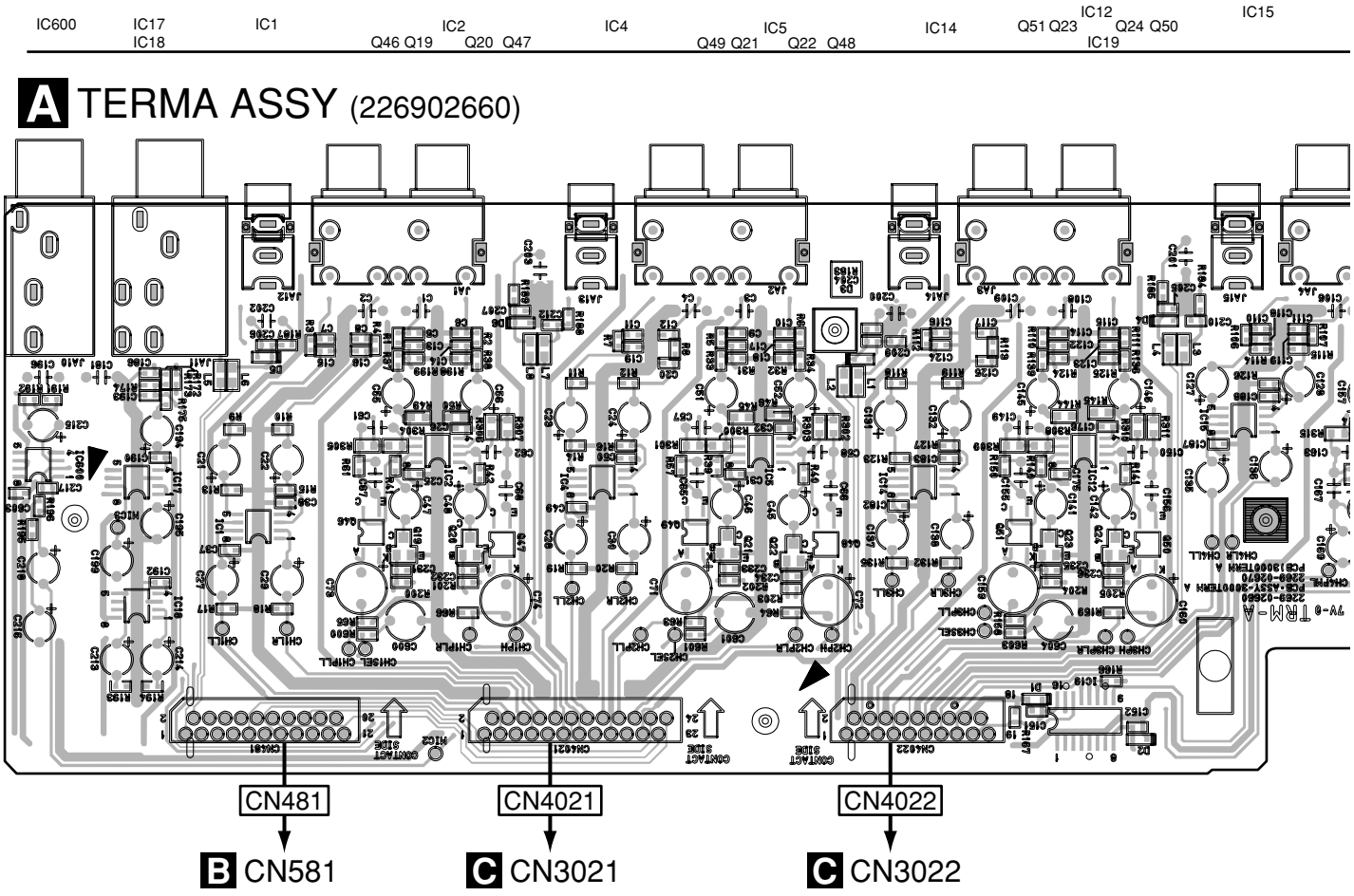

SIDE B

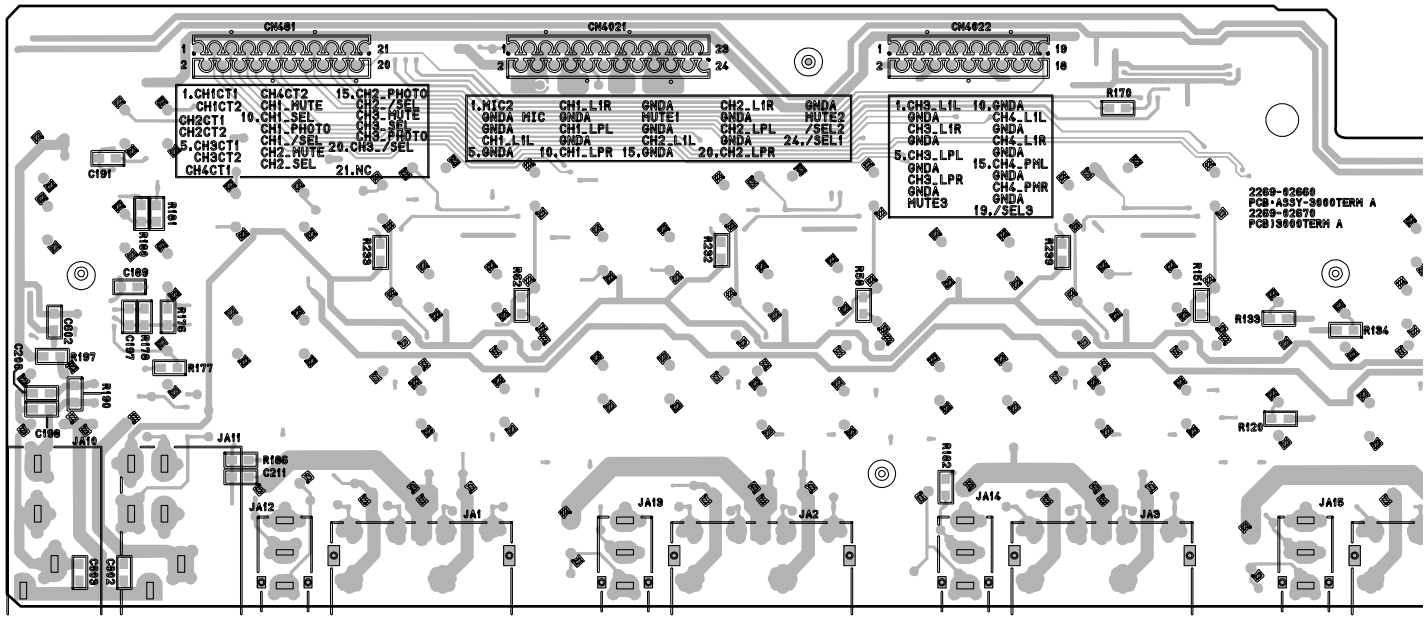

A

SIDE A

IC15 IC16 Q3 Q7 Q4 Q8 IC7 Q508 Q511 IC502 Q501 Q507 IC501 IC500

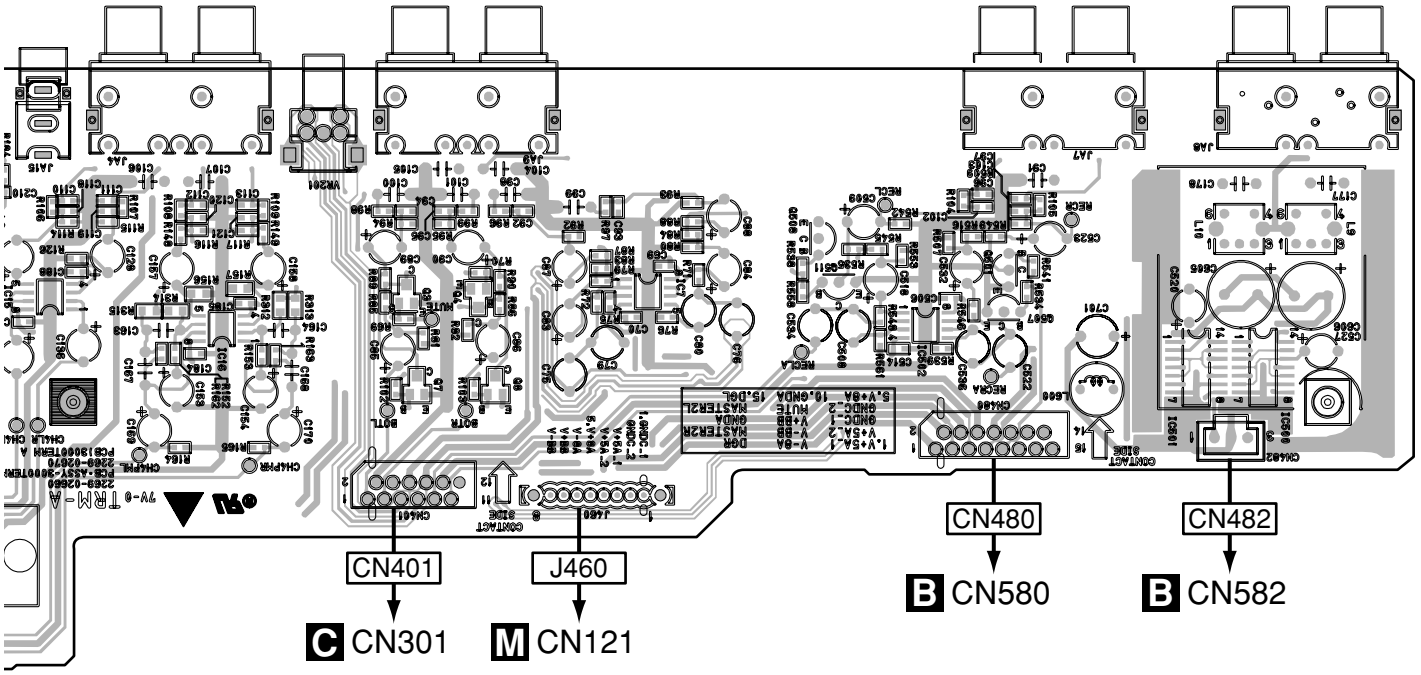

SIDE B

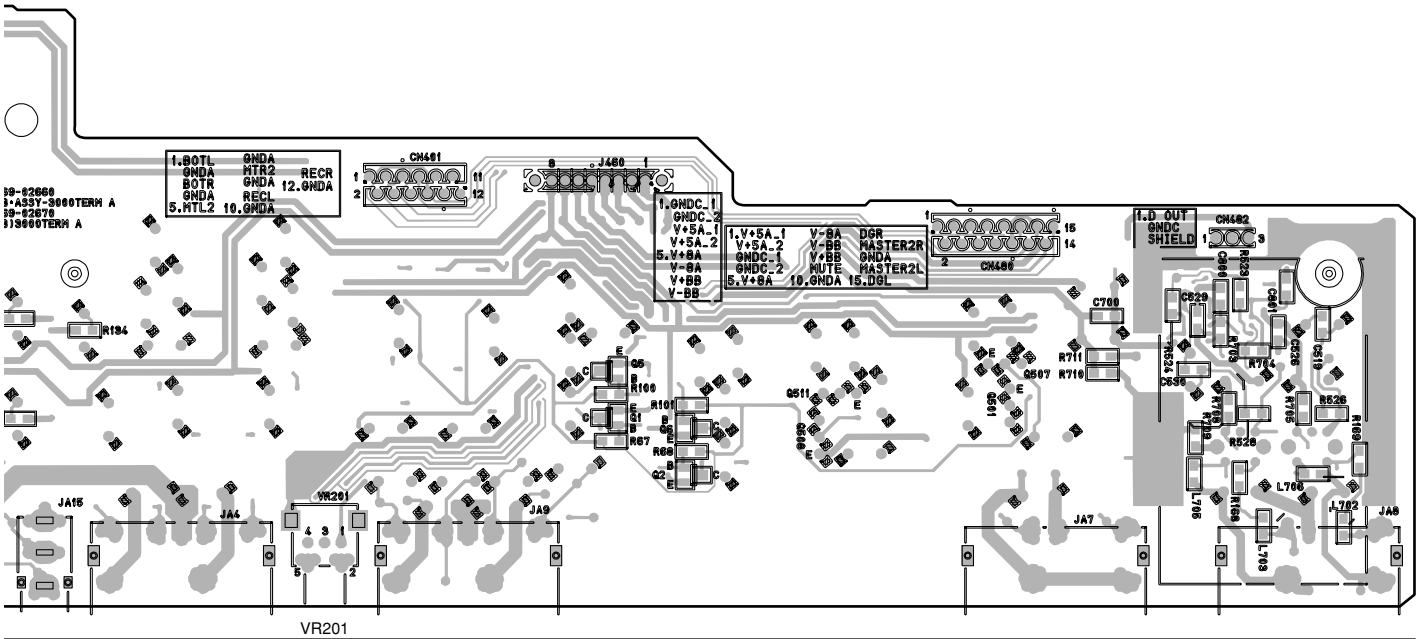

Q5 Q1 Q6 Q2 Q511 Q508 Q507 Q501

A

4.3 TERMB ASSY

SIDE A

B TERMB ASSY (226902680)

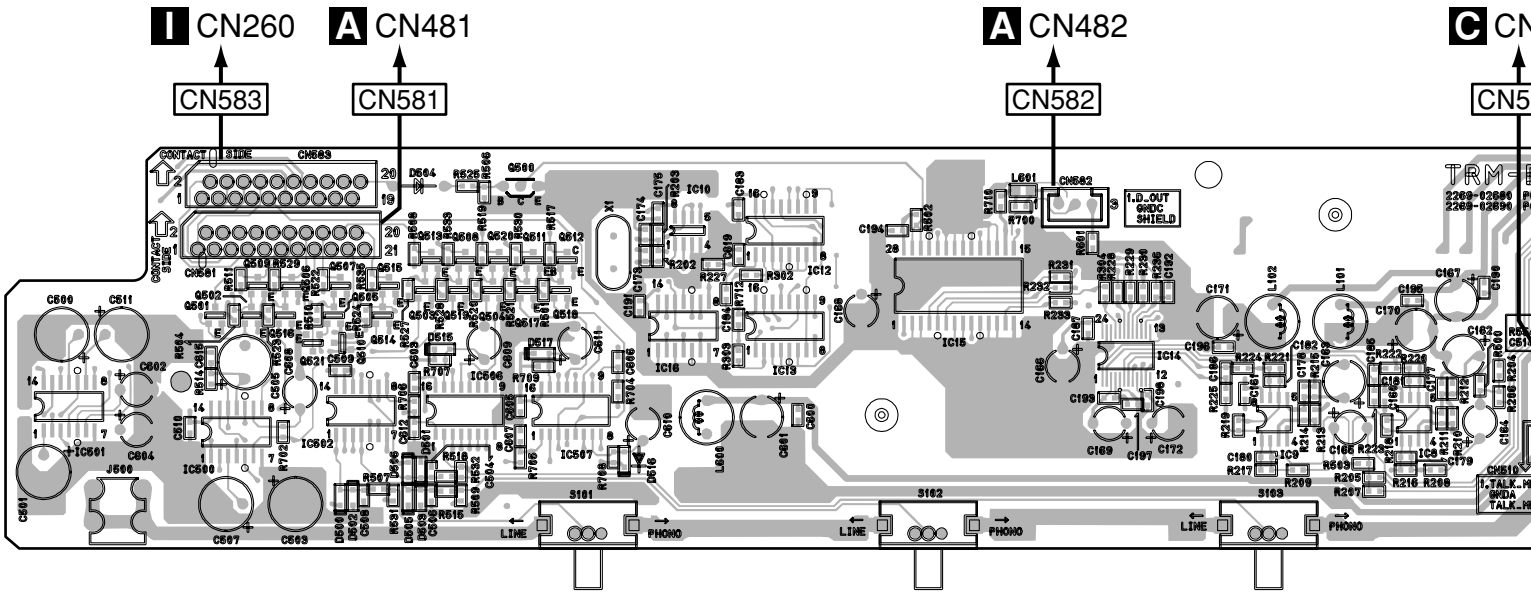

SIDE B

B TERMB ASSY (226902680)

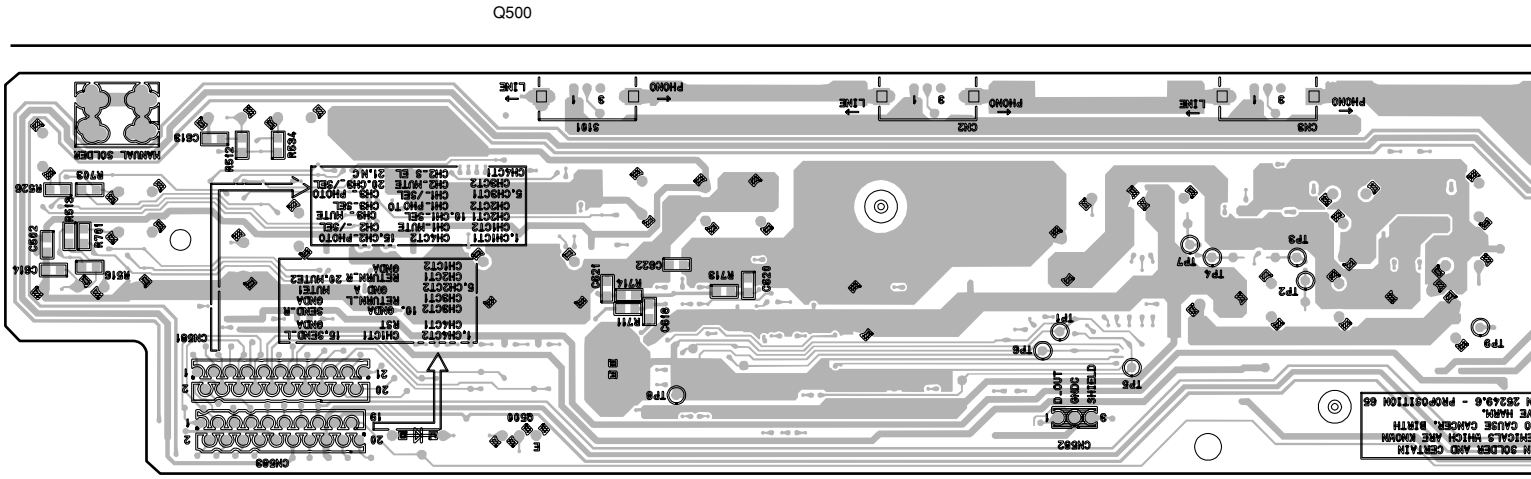

SIDE A

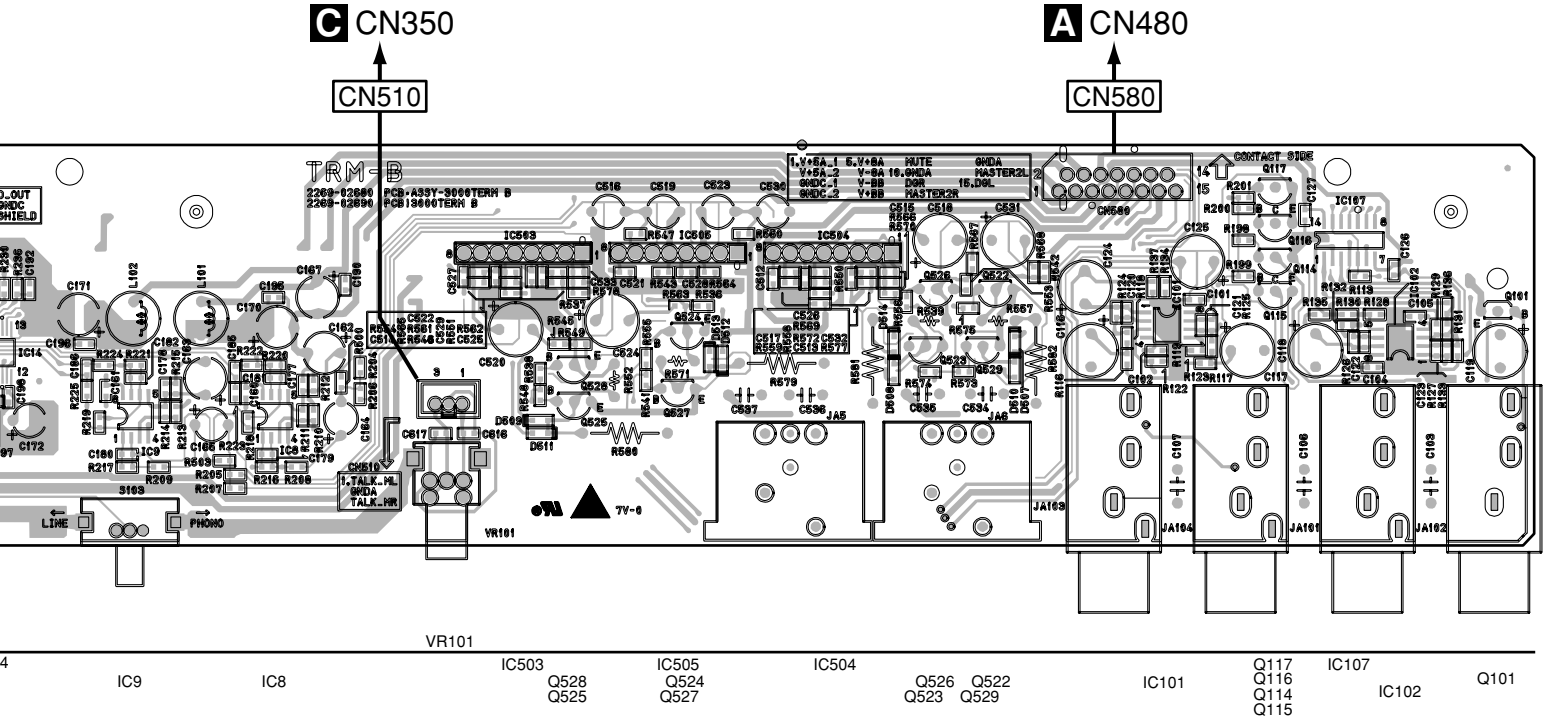
C CN350
CN510
A CN480
CN580
TRM-B
VR101
IC9
IC8
IC503
IC505
IC504
Q528
Q525
Q524
Q527
Q526
Q523
Q522
Q529
IC101
Q117
Q116
Q114
Q115
IC107
IC102
Q101

SIDE B

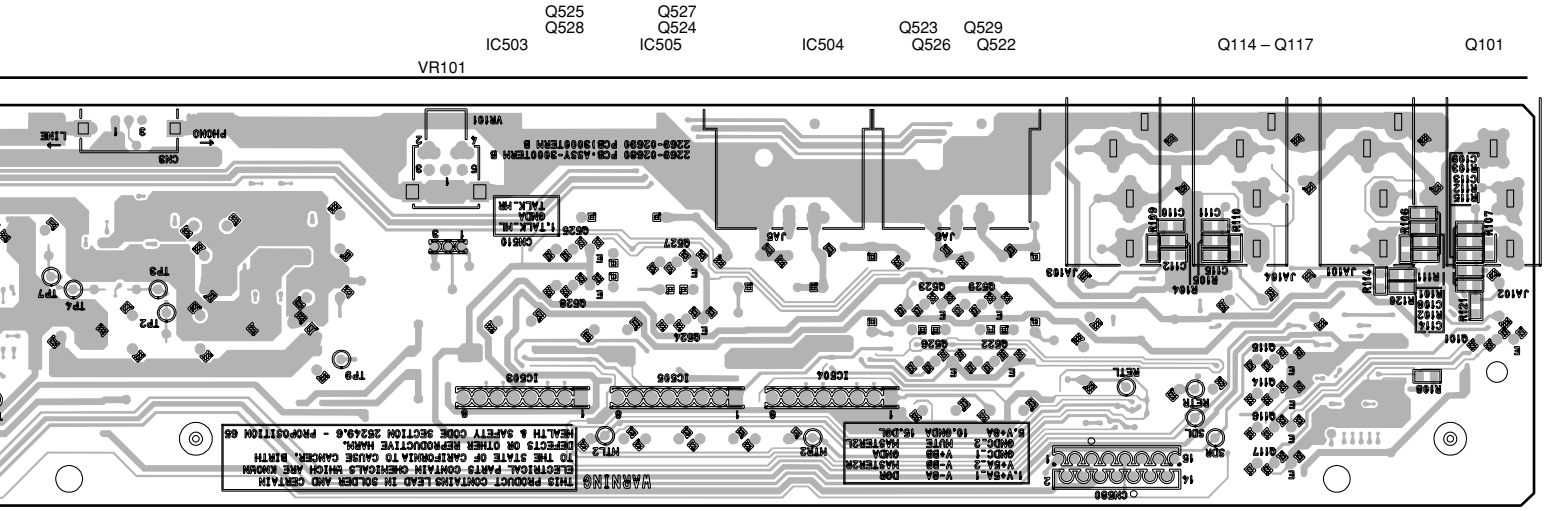
Q525
Q528
Q527
Q524
Q523
Q529
IC503
IC505
IC504
Q526
Q522
Q114 – Q117
Q101
VR101

4.4 VR, CFCURV, MIC, EFFECT and HP ASSYS

SIDE A

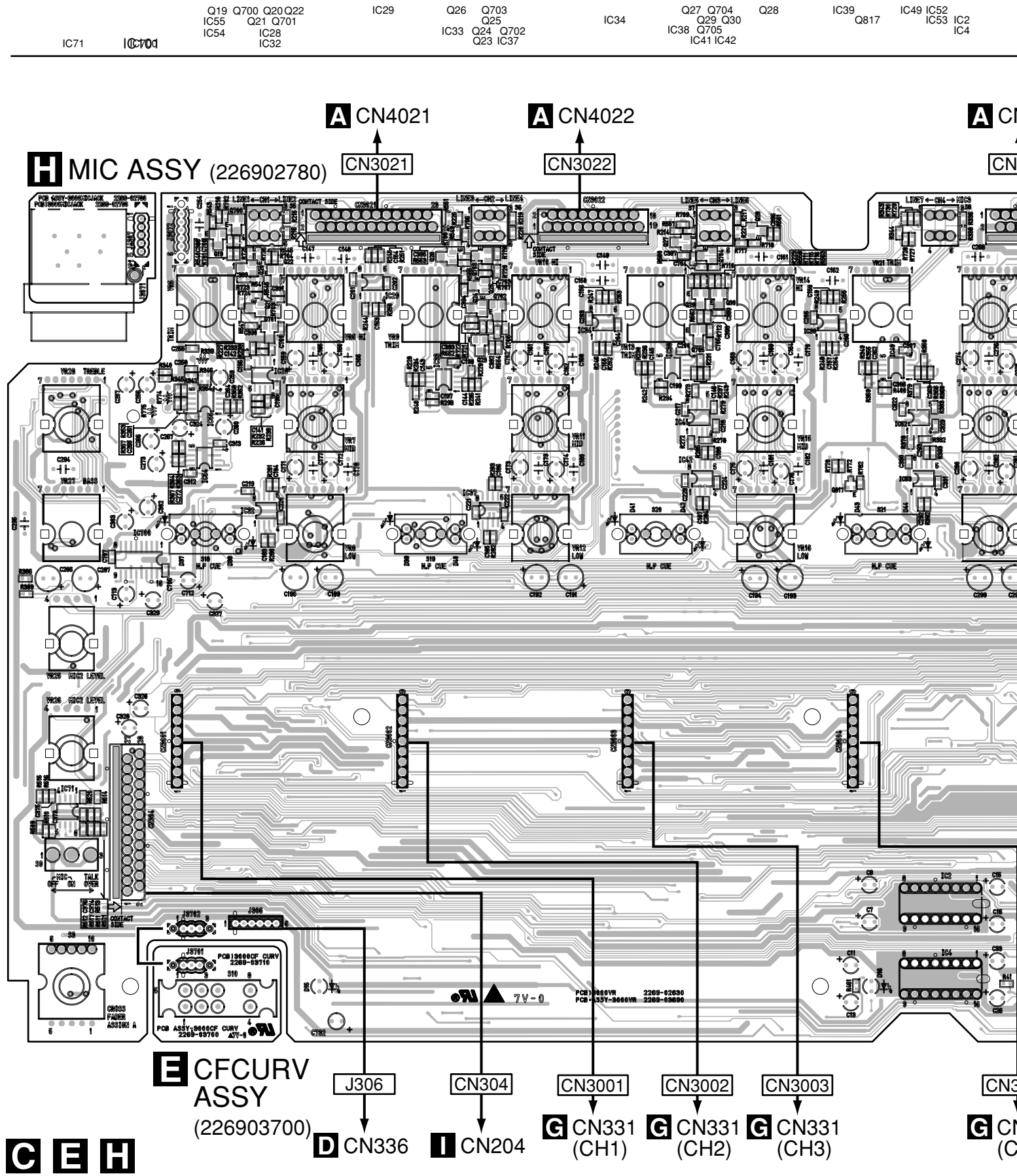

SIDE A

Q28 IC39 Q817 IC49 IC52 IC53 IC2 IC4 IC50 IC13 IC16 IC74 IC702 IC23 IC24 IC78 Q17 IC20 IC27 IC26 Q9 Q10

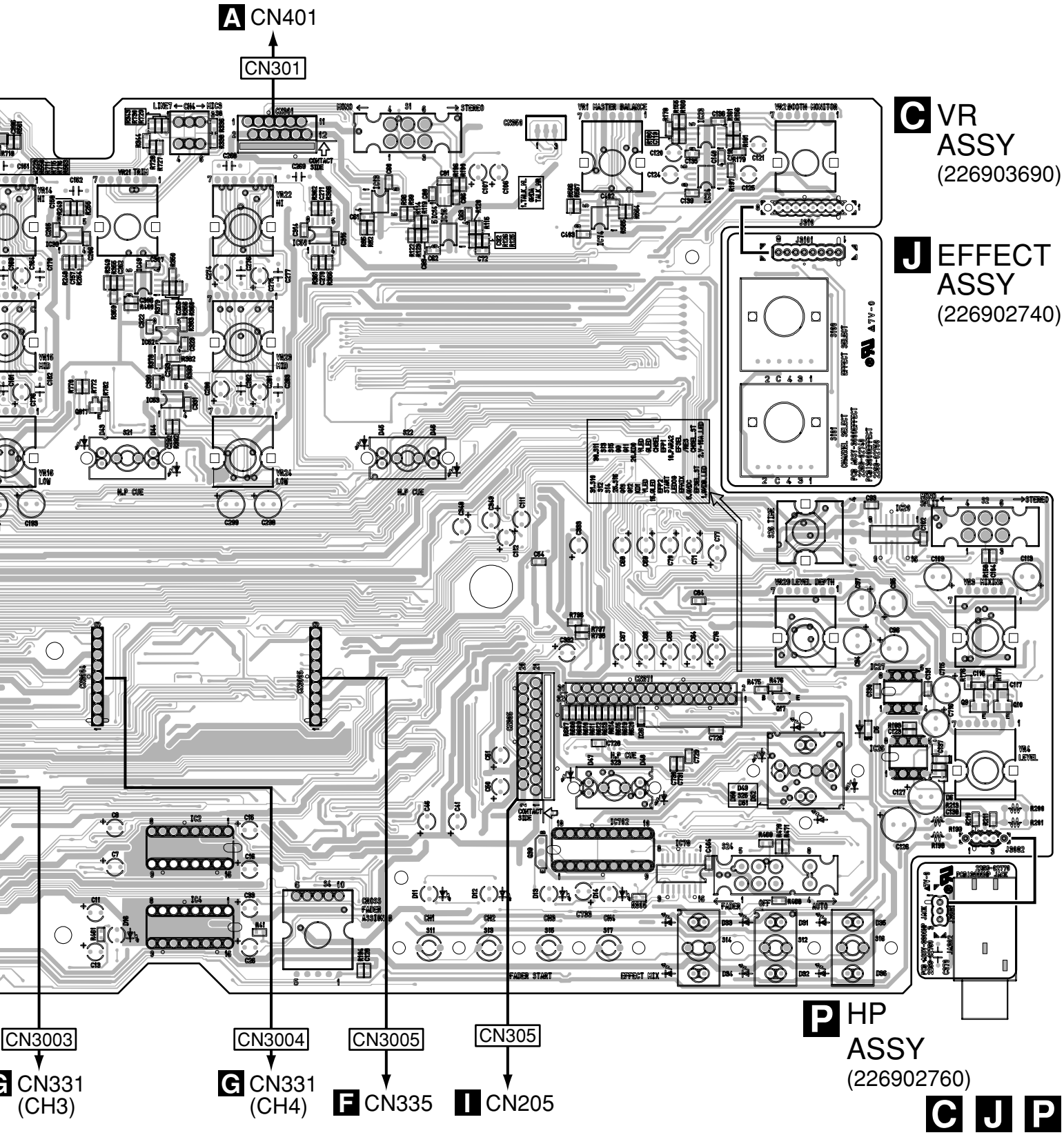

SIDE B

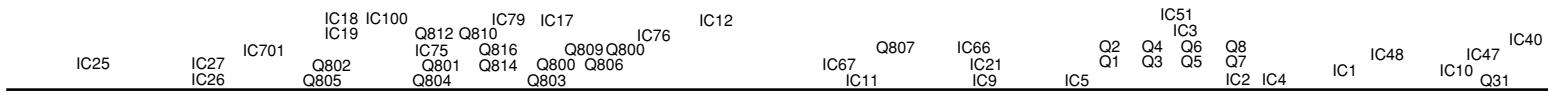
IC18 IC100
IC19
IC701
IC25
IC27
IC26
Q802
Q805
Q812 Q810
IC75 Q816
Q801 Q814
Q804
IC79 IC17
Q809 Q800
Q800 Q806
Q803
IC76
IC12
IC67
IC11
Q807
IC66
IC21
IC9
IC5
IC51
IC3
Q2 Q4 Q6 Q8
Q1 Q3 Q5 Q7
IC2 IC4
IC1
IC48
IC47
IC40
IC10
Q31

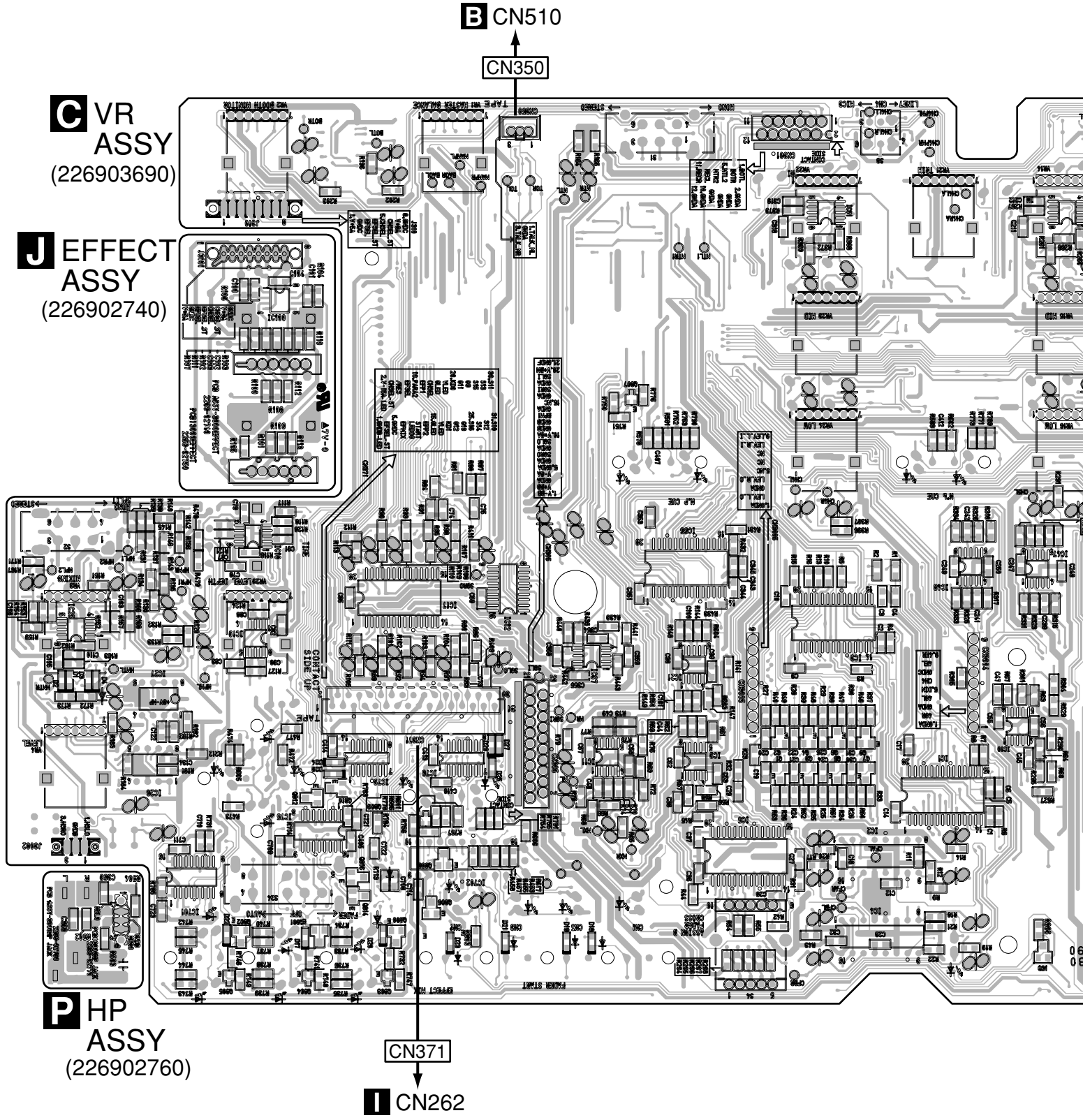
B CN510
CN350
C VR ASSY (226903690)
J EFFECT ASSY (226902740)
P HP ASSY (226902760)
CN371
I CN262
C J P

SIDE B

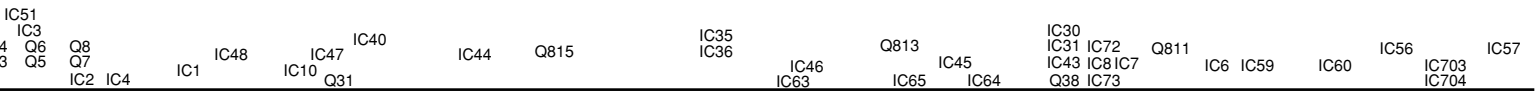

H MIC ASSY

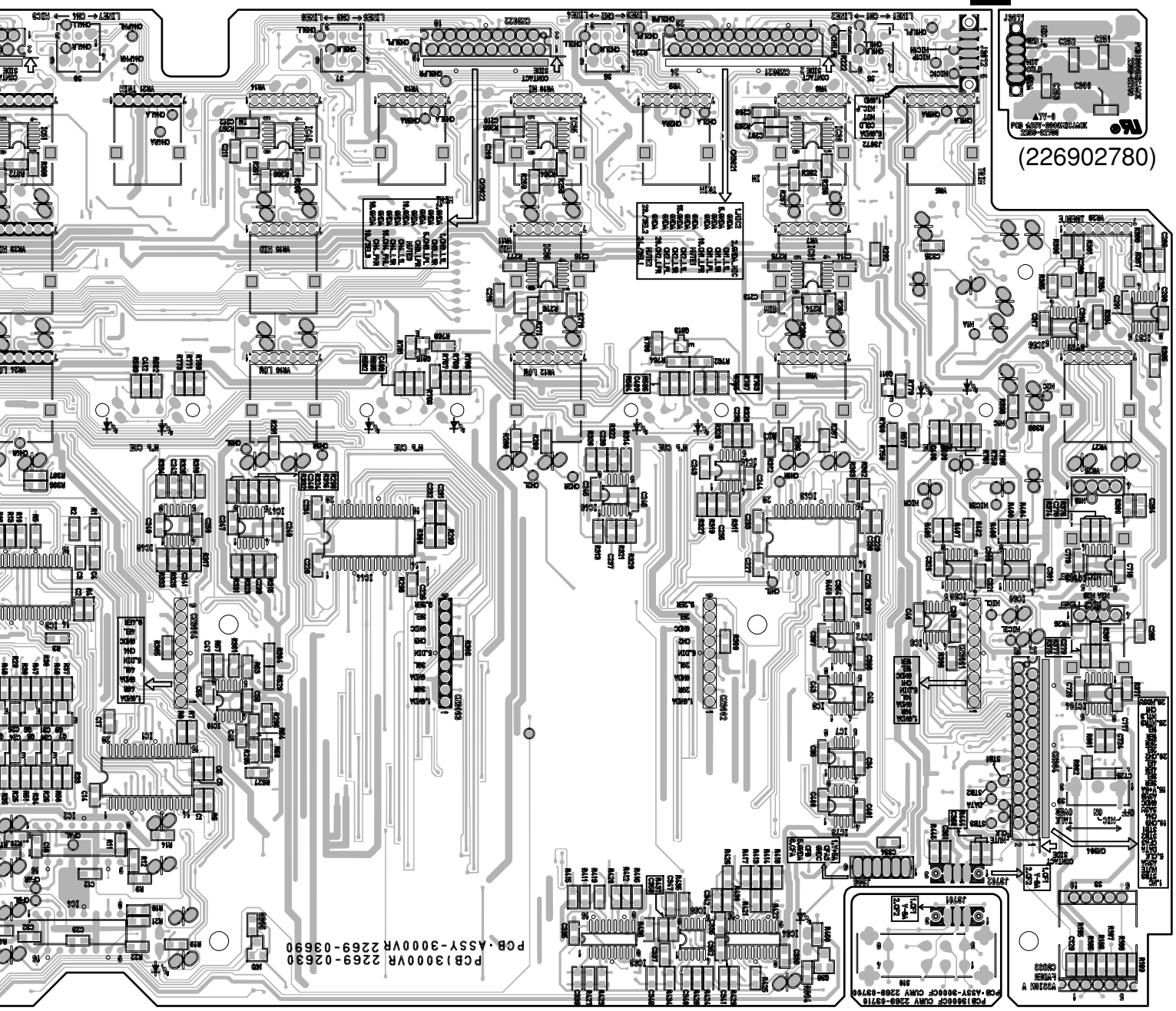

(226902780)

E CFCURV ASSY

(226903700)

C E H

4.5 DSP ASSY

SIDE A

M CN119

CN209

I DSP ASSY (226902640)

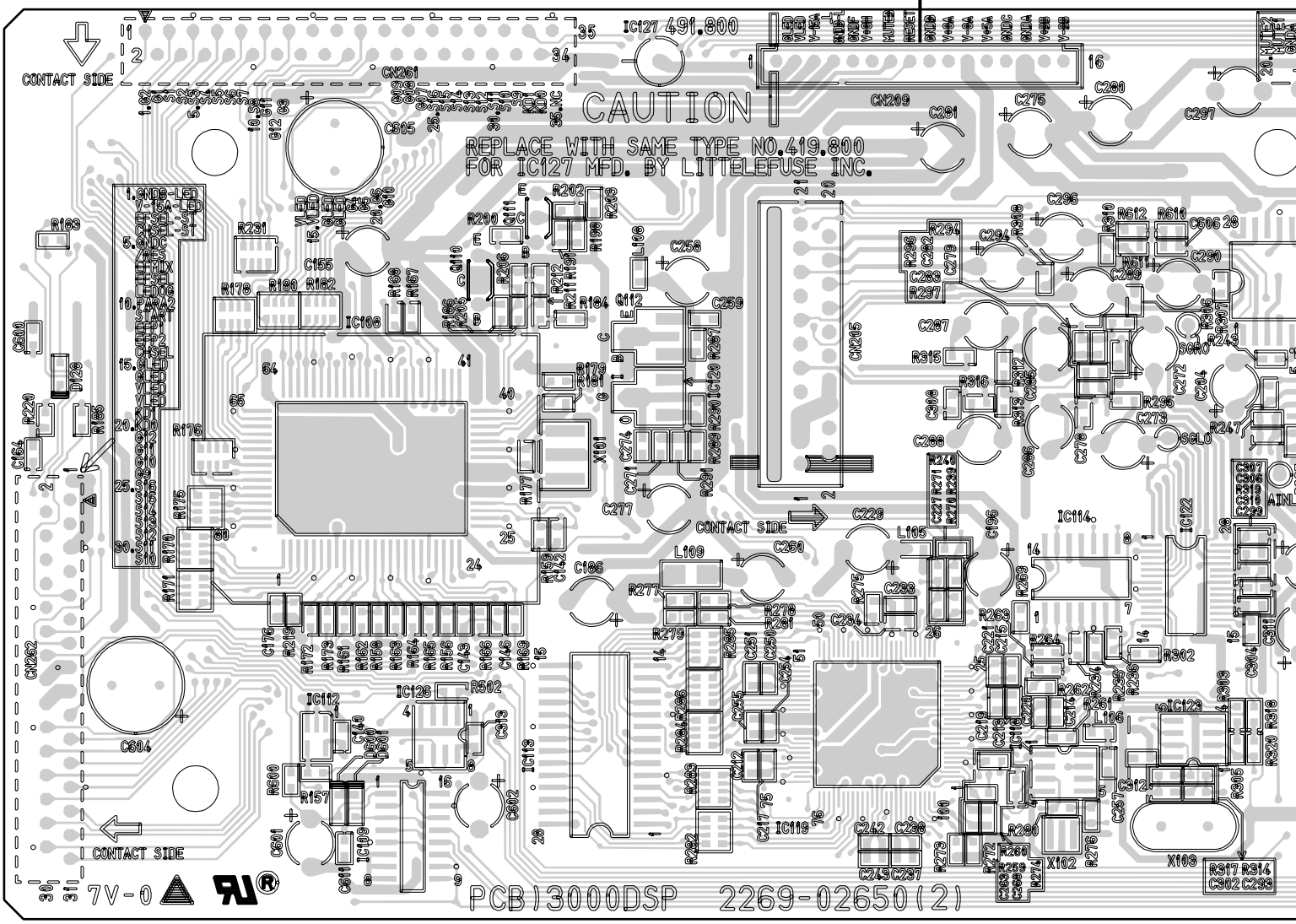

IC108 IC112 IC126 IC109 Q110 Q111 IC127 Q112 IC113 IC120 IC119 IC114 IC118 IC122 IC123

I

SIDE A

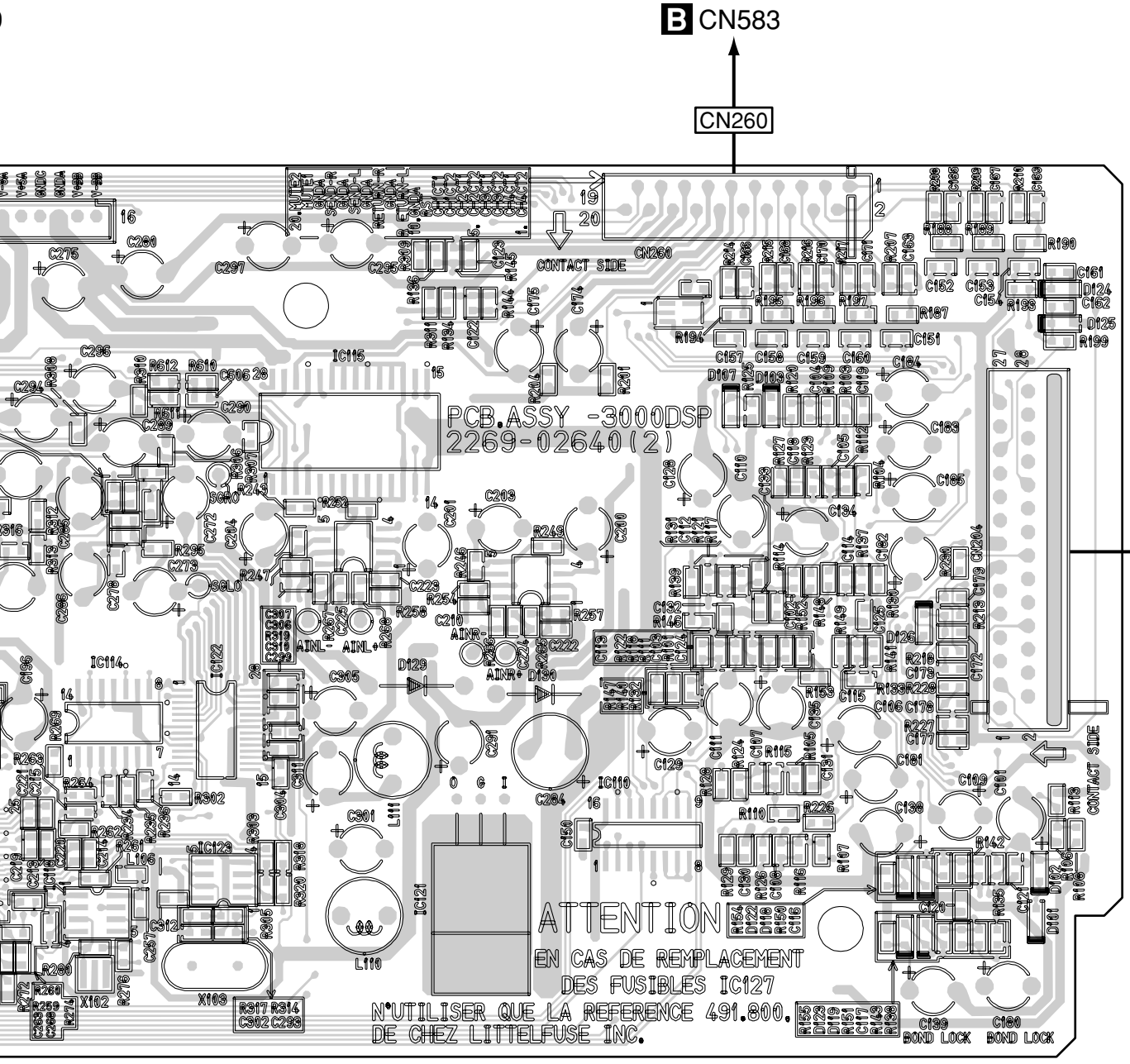

IC114 IC118 IC122 IC123 IC115 IC121 IC110

SIDE B

DSP ASSY (226902640)

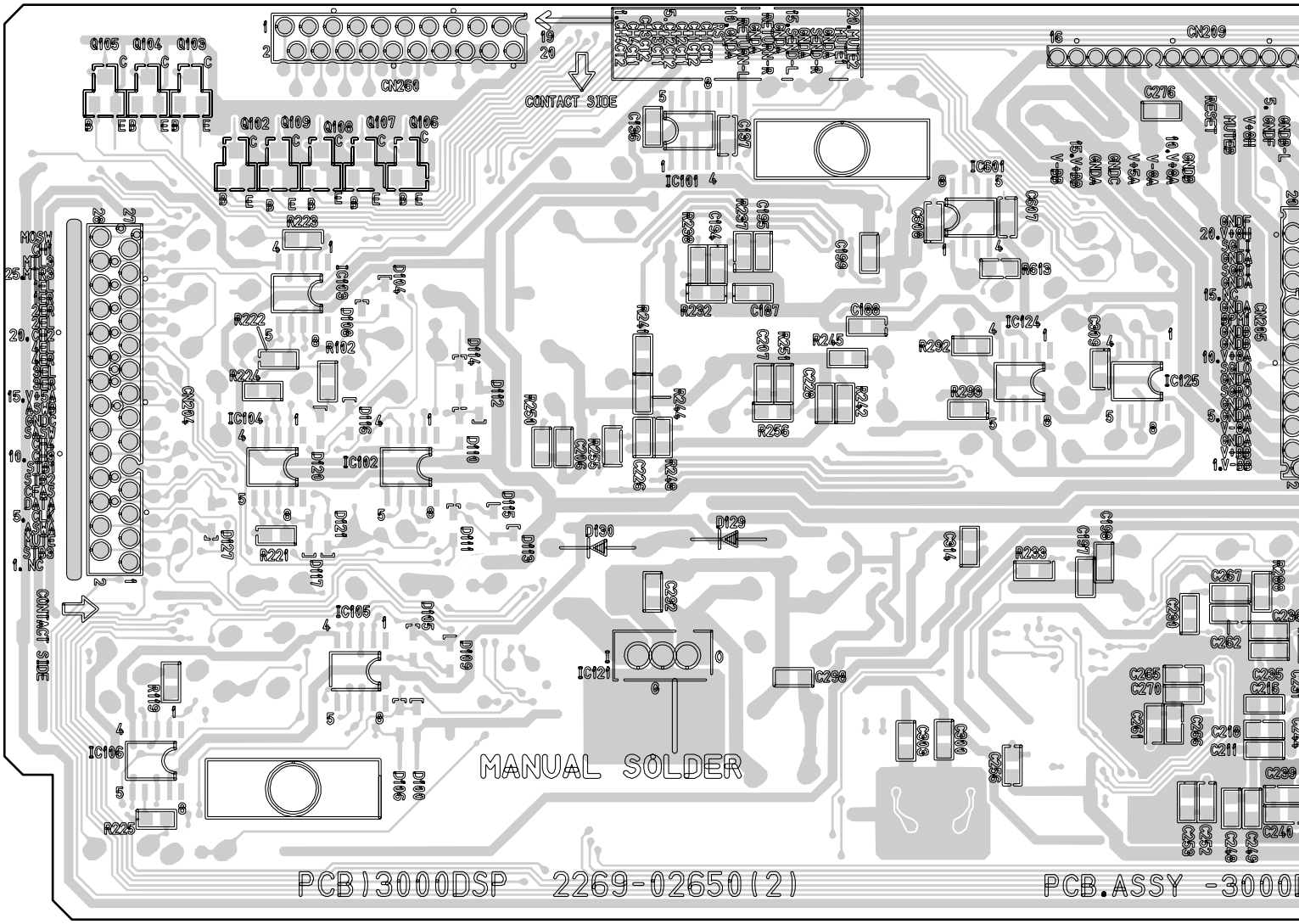

Q105 Q104 Q103 Q102 Q109 Q108 Q107 Q106
IC106 IC103 IC105 IC102
IC101 IC121
IC501 IC124 IC125

SIDE B

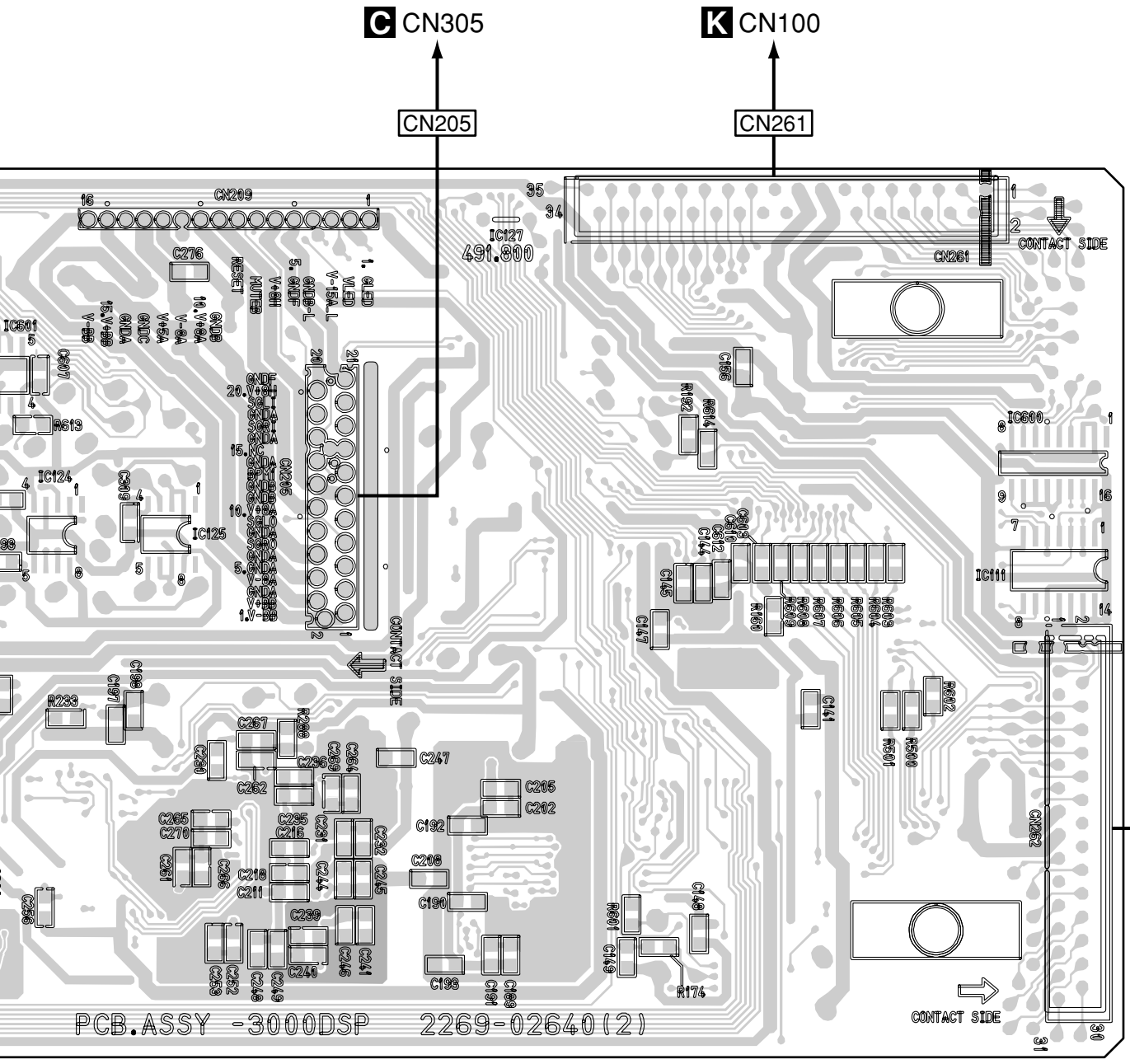

IC501
IC124
IC125
IC127
IC600
IC111

4.6 LED ASSY

SIDE A

K LED ASSY (226902720)

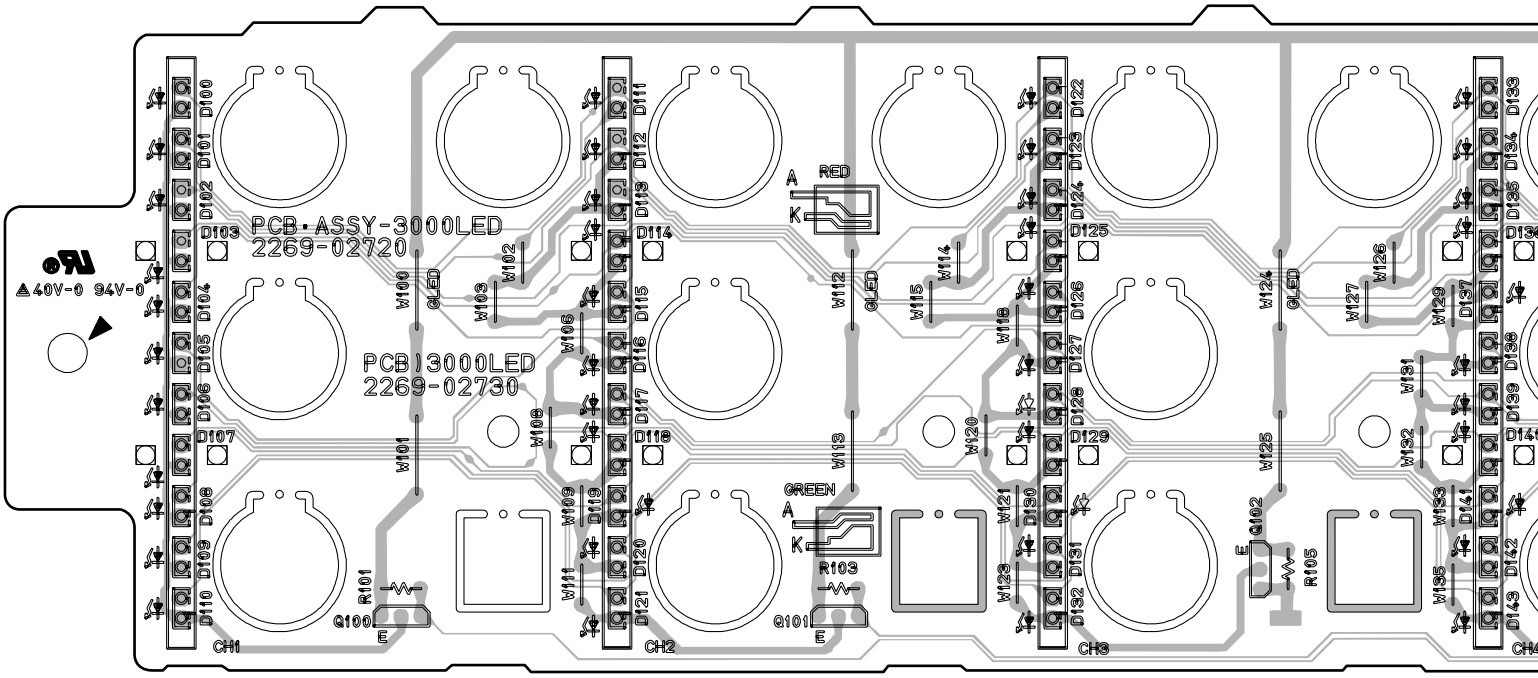

SIDE A

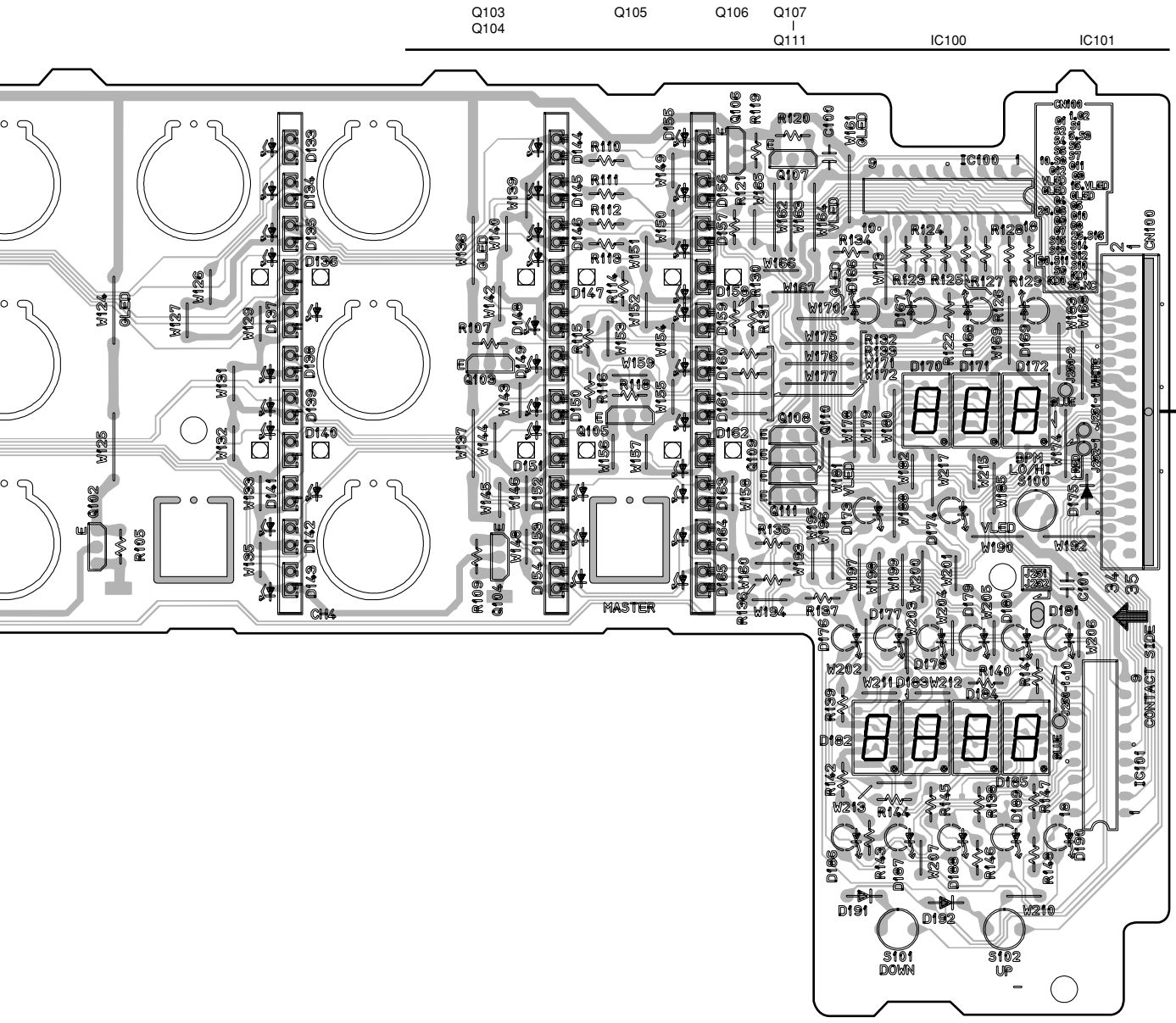
Q103
Q104
Q105
Q106
Q107
Q111
IC100
IC101
CN100
CN261
CH4
MASTER
S101
DOWN
S102
UP
CONTACT SIDE

SIDE B

K LED ASSY (226902720)

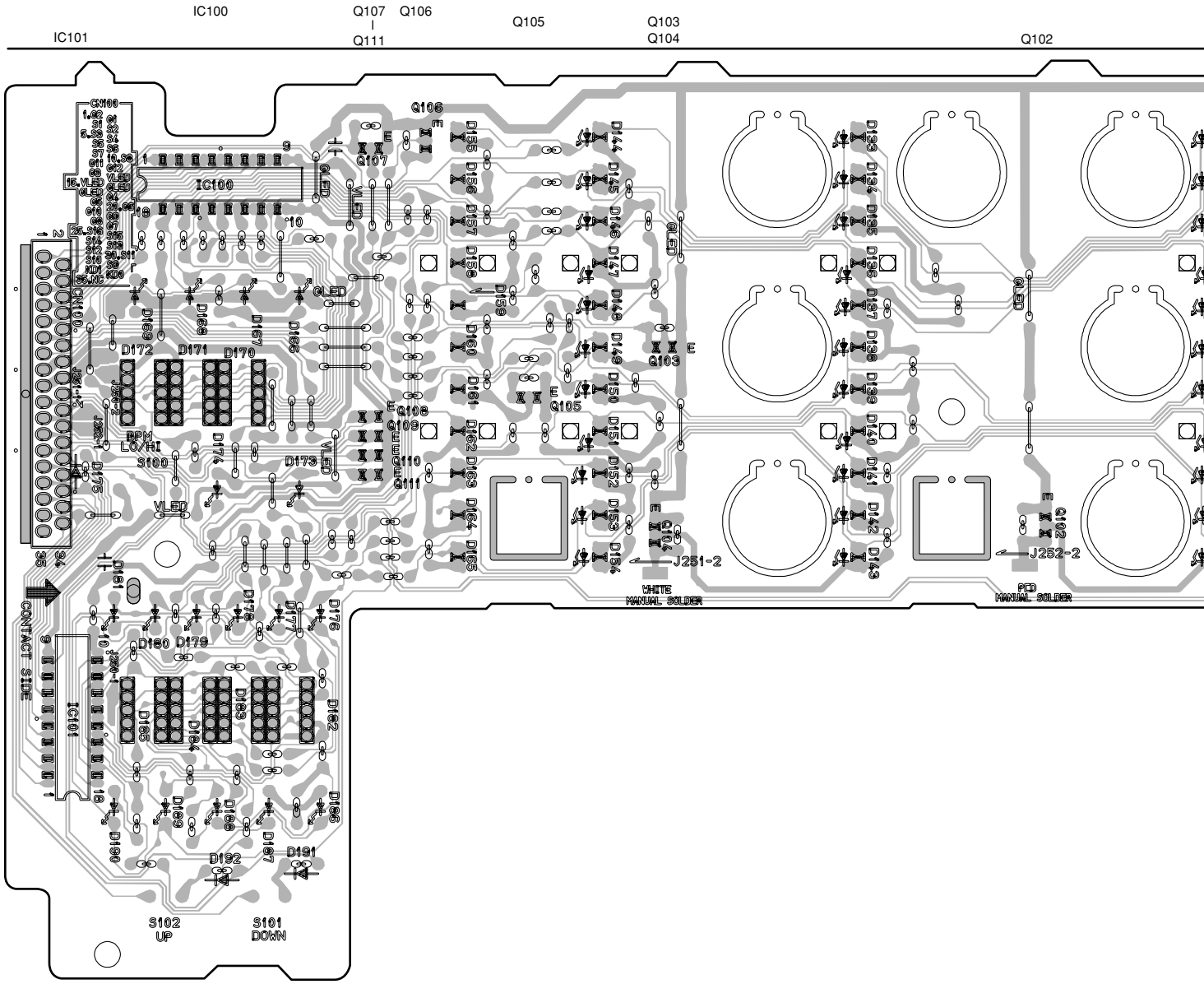

SIDE B

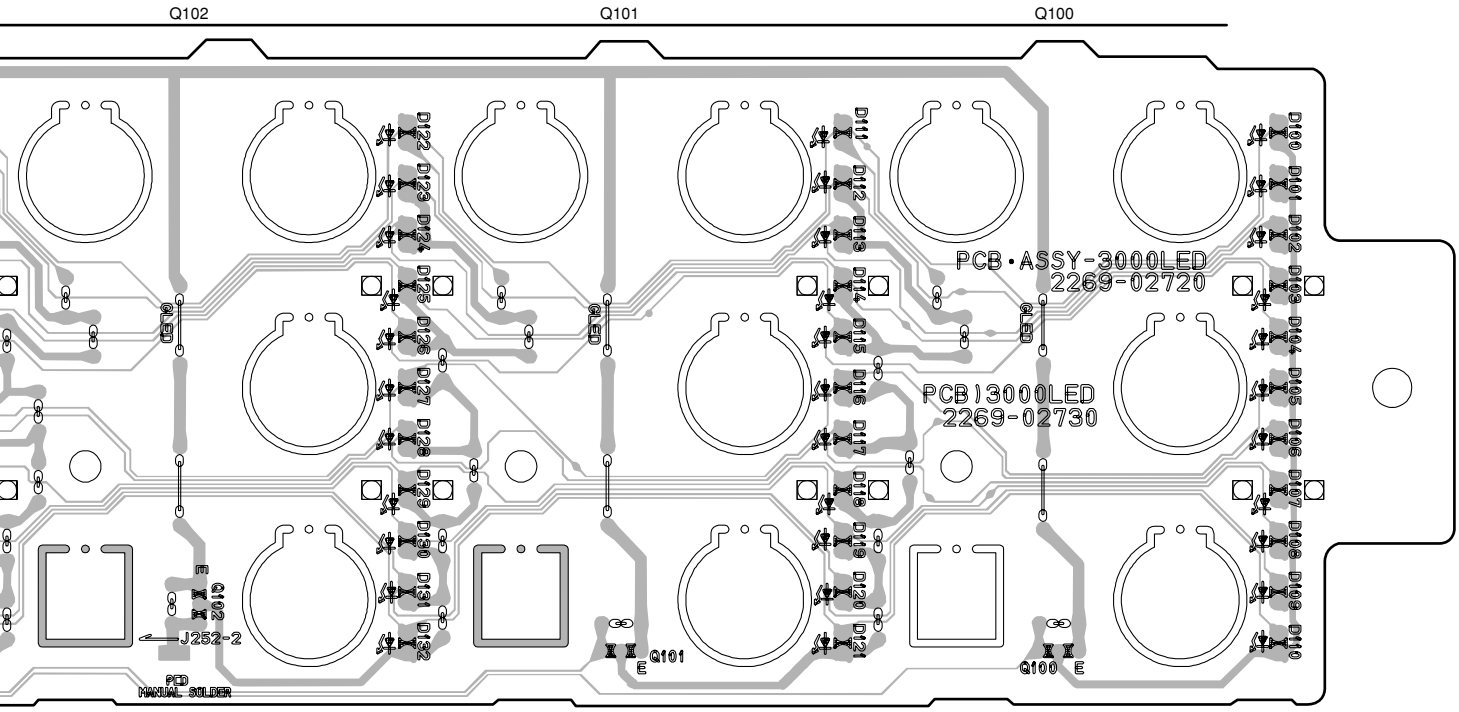
Q102
Q101
Q100
PCB・ASSY-3000LED
2269-02720
PCB|3000LED
2269-02730
GLED
J252-2
Q102
Q101
Q100
PID
MANUAL SOLDER

4.7 REG, POWER, TRANS and PSW ASSYS

SIDE A

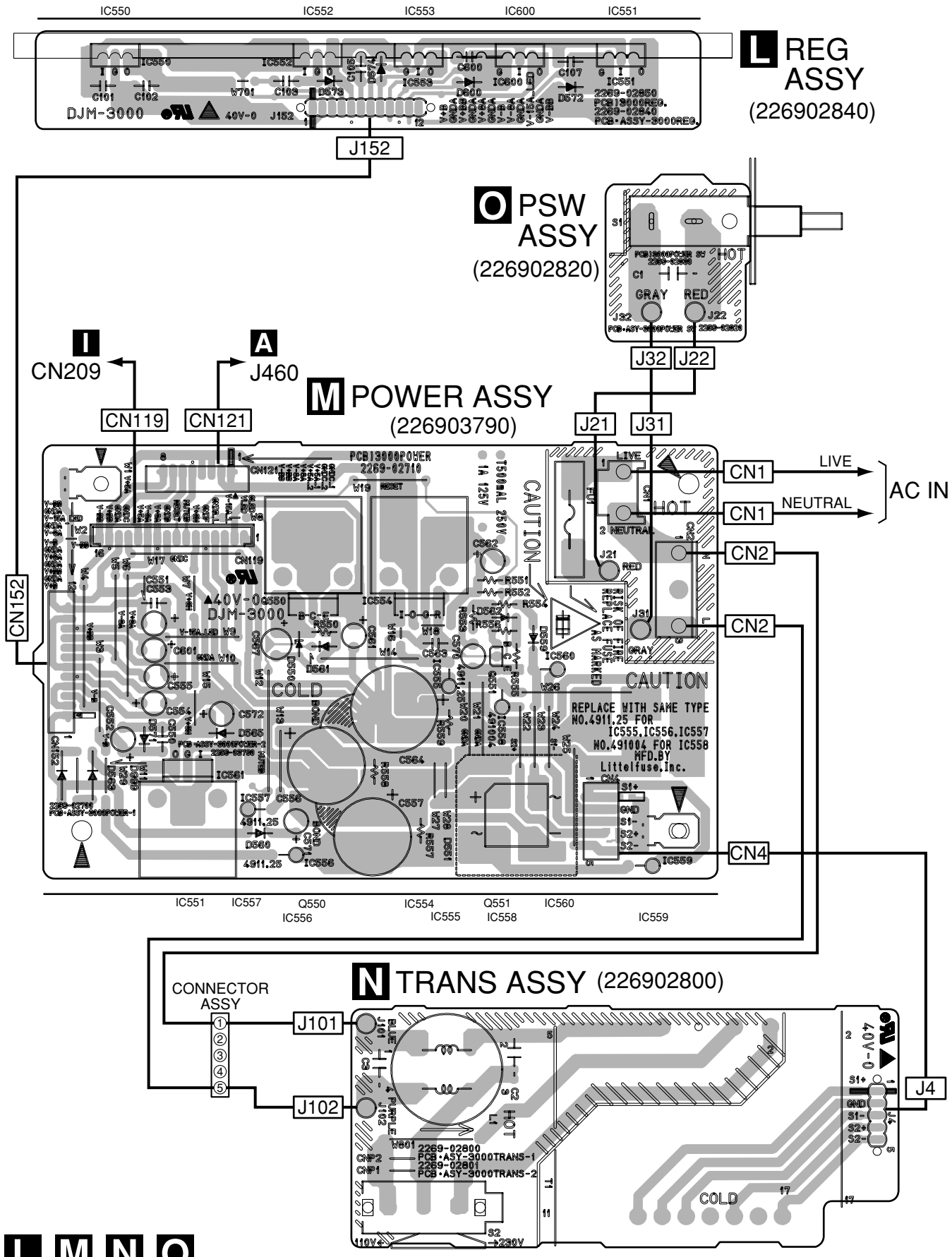

L M N O

SIDE B

L REG ASSY (226902840)

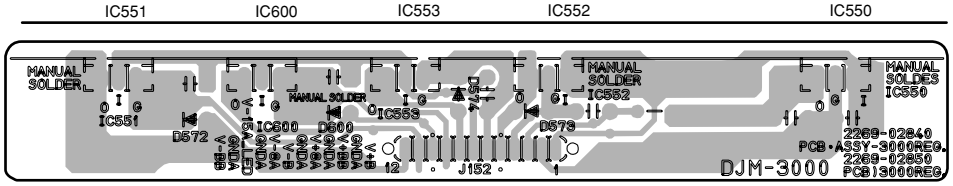

O PSW ASSY (226902820)

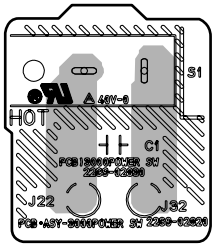

M POWER ASSY (226903790)

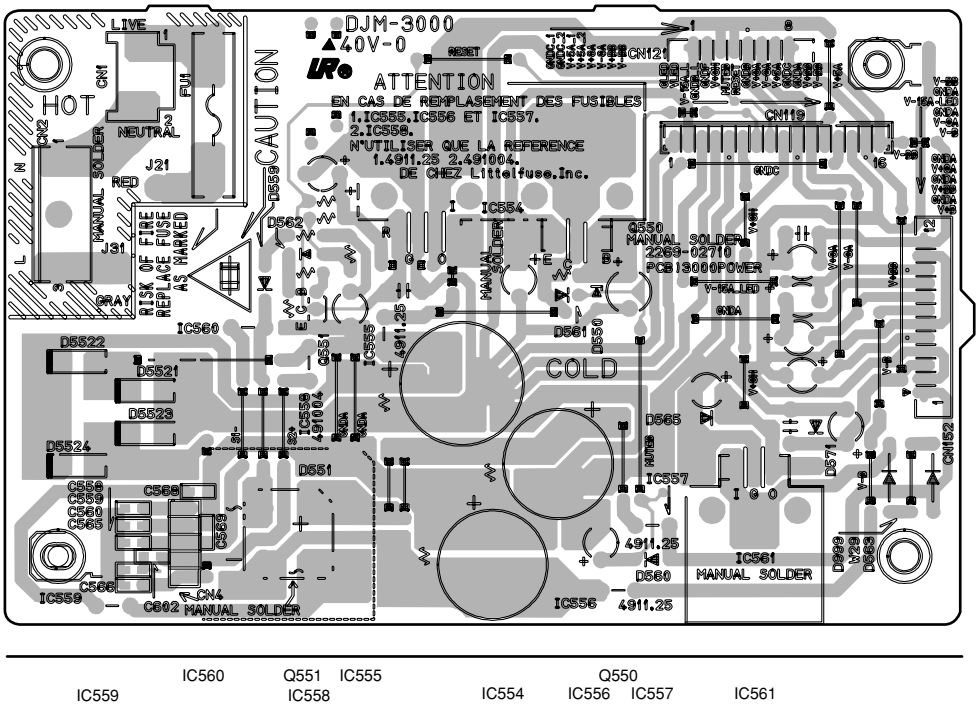

IC559 IC560 IC558 Q551 IC555 IC554 Q550 IC556 IC557 IC561

N TRANS ASSY (226902800)

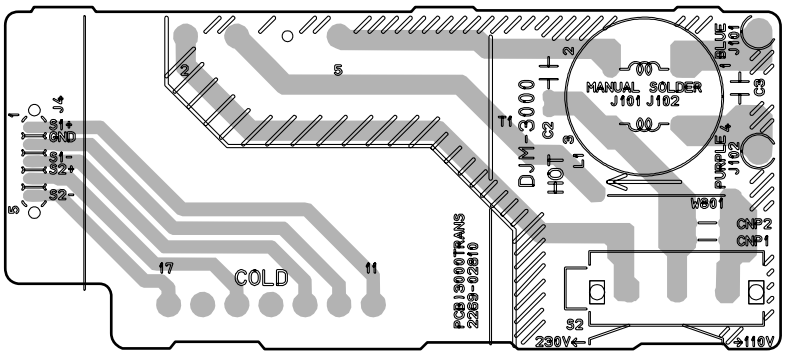

L M N O

4.8 CHF1 to CHF4 ASSYS

SIDE A

SIDE B

G CHF4 ASSY (226902860CH4)

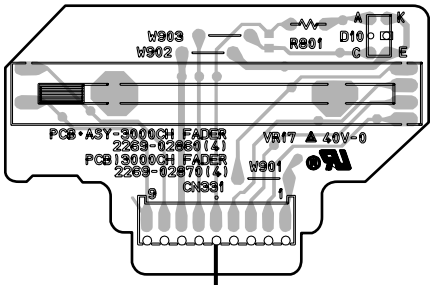

CN331 → C CN3004

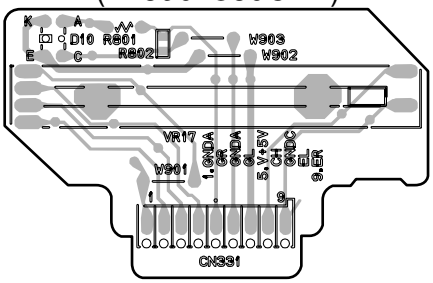

G CHF3 ASSY (226902860CH3)

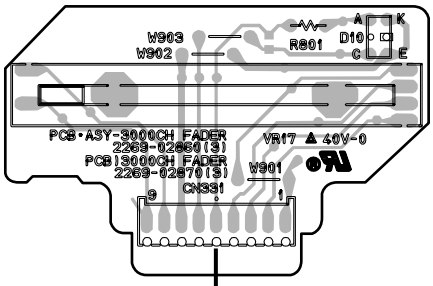

CN331 → C CN3003

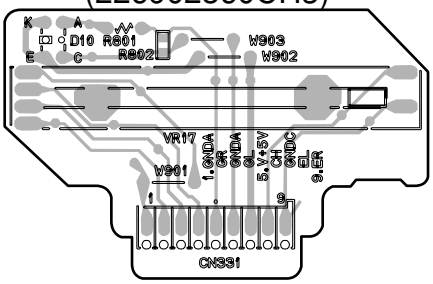

G CHF2 ASSY (226902860CH2)

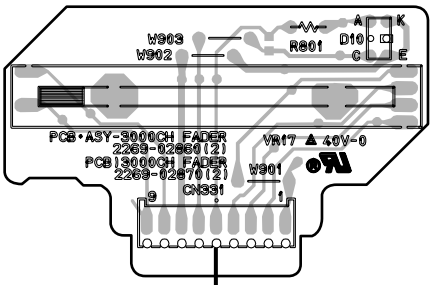

CN331 → C CN3002

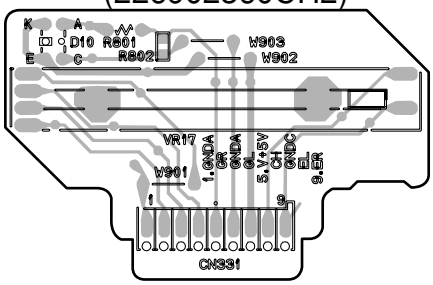

G CHF1 ASSY (226902860CH1)

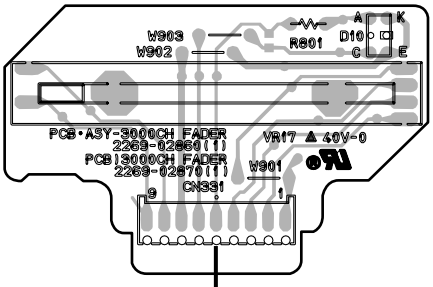

CN331 → C CN3001

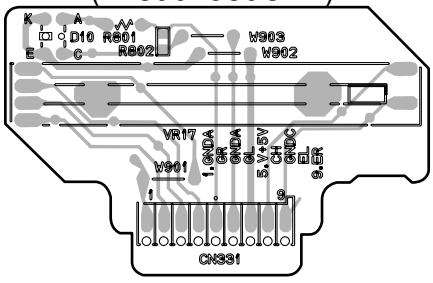

G

5. PCB PARTS LIST

NOTES: ● *Parts marked by "NSP" are generally unavailable because they are not in our Master Spare Parts List.*
● *The ⚠ mark found on some component parts indicates the importance of the safety factor of the part. Therefore, when replacing, be sure to use parts of identical designation.*
● *When ordering resistors, first convert resistance values into code form as shown in the following examples.*
Ex.1 When there are 2 effective digits (any digit apart from 0), such as 560 ohm and 47k ohm (tolerance is shown by J=5%, and K=10%).

560 Ω	→ *56 x 10¹* →	*561*	*RD1/4PU 5 6 1 J*
47k Ω	→ *47 x 10³* →	*473*	*RD1/4PU 4 7 3 J*
0.5 Ω	→	*R50*	*RN2H R 5 0 K*
1 Ω	→	*1R0*	*RS1P 1 R 0 K*

Ex.2 When there are 3 effective digits (such as in high precision metal film resistors).

5.62k Ω	→ *562 x 10¹* →	*5621*	*RN1/4PC 5 6 2 1 F*

LIST OF WHOLE PCB ASSEMBLIES

Mark	Symbol and Description	DJM-3000/ KUCXCN	DJM-3000/WYXCN	DJM-3000/ RLBXCN
	TERM ASSY	226902660	226902660	226902660
	TERMA ASSY	226902660	226902660	226902660
	TERMB ASSY	226902680	226902680	226902680
NSP	VR ASSY	226100980	226100980	226100980
	VR ASSY	226903690	226903690	226903690
NSP	CFCURV ASSY	226903700	226903700	226903700
NSP	EFFECT ASSY	226902740	226902740	226902740
NSP	MIC ASSY	226902780	226902780	226902780
NSP	HP ASSY	226902760	226902760	226902760
	DSP ASSY	226902640	226902640	226902640
NSP	SUB ASSY	226101022	226101020	226101020
	CF ASSY	226902960	226902960	226902960
	MAF ASSY	226902940	226902940	226902940
	CHF1 ASSY	226902860CH1	226902860CH1	226902860CH1
	CHF2 ASSY	226902860CH2	226902860CH2	226902860CH2
	CHF3 ASSY	226902860CH3	226902860CH3	226902860CH3
	CHF4 ASSY	226902860CH4	226902860CH4	226902860CH4
	LED ASSY	226902720	226902720	226902720
	REG ASSY	226902840	226902840	226902840
	POWER ASSY	226903790	226902700	226902700
	TRANS ASSY	226902800	226902800	226902800
	PSW ASSY	226902820	226902820	226902820

N TRANS ASSY

Mark	Symbol and Description	226902800	226902801
	S2 Voltage Selector	Not used	DSA1026

M POWER ASSY

Although 226902700 and 226903790 are different in part number, they consist of the same components.

Mark No.	Description	Part No.
	A TERMA ASSY	
	SEMICONDUCTORS	
	IC12,IC16,IC17,IC2,IC5	NJM2068M
	IC600	NJM2068M
	IC1,IC14,IC15,IC18,IC4	NJM4580M
	IC502,IC7	NJM4580M
	IC46-IC51	PC357N1
	IC500,IC501	TC74HCU04AF
	IC19	TC9215AF
	Q501,Q507,Q508,Q511	2SC2878
	Q1,Q19,Q2,Q20-Q24	2SC3326
	Q3-Q8	2SC3326
	D1-D6	1SS355
	COILS	
⚠	L702,L703,L705,L706	922607040
	L600	LRCA101J
	L9,L10	PTL1003
	L1-L8 (Puls Trans)	VTL1105
	CAPACITORS	
	C198,C208	CCSQCH101J50
	C197	CCSQCH220J50
	C10,C102,C103,C11	CCSRCH101J50
	C110-C119,C12,C120-C125	CCSRCH101J50
	C13-C18,C186,C19,C193	CCSRCH101J50
	C20,C5-C9,C92-C97	CCSRCH101J50
	C217	CCSRCH220J50
	C605,C606	CEAT471M16
	C195	CEJQ100M16
	C127,C128,C131,C132	CEJQ100M50
	C135-C138,C145,C146	CEJQ100M50
	C157,C158,C169,C170,C194	CEJQ100M50
	C199,C21,C213-C216,C218	CEJQ100M50
	C22-C24,C27-C30,C509	CEJQ100M50
	C51,C518,C52,C523,C532	CEJQ100M50
	C55,C56,C83-C90	CEJQ100M50
	C701	CEJQ101M10
	C141,C142,C153,C154	CEJQ220M25
	C45-C48	CEJQ220M25
	C159,C160,C71-C74	CEJQ330M50
	C520,C527	CEJQ470M16
	C600,C601,C604	CEJQNP330M25
	C508,C522,C534,C536	CEJQNPR33M50
	C75,C76,C79,C80	CEJQNPR33M50
	C1,C104-C109,C181,C196	CKCYF103Z50
	C2-C4	CKCYF103Z50
	C177,C178,C200-C203,C91	CKCYF473Z50
	C189,C191,C211,C602	CKSQYB103K50
	C802,C803	CKSQYB103K50
	C519,C526,C529,C530,C700	CKSQYB104K25
	C151,C152,C175,C176	CKSRYB103K50
	C182-C185,C187,C188,C190	CKSRYB103K50
	C192,C204-C207,C209,C210	CKSRYB103K50
	C212,C25,C26,C31,C32	CKSRYB103K50
	C37,C38,C49,C50,C506	CKSRYB103K50
	C514,C603,C69,C70	CKSRYB103K50
	C98-C101	CQMA152J50
	C57,C58,C61,C62,C149	CQMA222J50
	C150,C163,C164	CQMA222J50
	C65-C68,C155,C156,C167,C168	CQMA681J50
	RESISTORS	
	R190	RN1/10SE1000D
	R180,R181	RN1/10SE1001D
	R120,R177,R197	RN1/10SE1003D
	R176	RN1/10SE1201D
	R151,R178,R58,R62	RN1/10SE1203D
	R144,R145,R156,R157	RN1/10SE4703D
	R45,R46,R49,R50	RN1/10SE4703D
	R300-R315	RN1/10SE7503D
	R1,R104,R105,R108-R111	RN1/16SE1000D
	R173,R2,R5,R6	RN1/16SE1000D
	R96-R99	RN1/16SE1000D
	R136,R139,R148,R149	RN1/16SE1001D
	R33,R34,R37,R38	RN1/16SE1001D
	R123,R126,R127,R13-R16	RN1/16SE1003D
	R507,R509,R542,R553	RN1/16SE1003D
	R79-R82,R92-R95	RN1/16SE1003D
	R195	RN1/16SE1201D
	R150,R162,R163,R196,R57	RN1/16SE1203D
	R61	RN1/16SE1203D
	R10,R11,R114,R115	RN1/16SE1302D
	R118,R119,R12,R9	RN1/16SE1302D
	R106,R107,R112,R113,R174	RN1/16SE1502D
	R191,R3,R4,R546,R548	RN1/16SE1502D
	R7,R71,R72,R8	RN1/16SE1502D
	R164,R165,R193,R194	RN1/16SE2002D
	R140,R141,R152,R153,R175	RN1/16SE3301D
	R192,R39-R42	RN1/16SE3301D
	R516,R535,R545,R549	RN1/16SE4300D
	R83-R90	RN1/16SE4300D
	R539,R561,R75,R76	RN1/16SE4302D
	R116,R117,R124,R125	RN1/16SE5602D
	R198,R199,R31,R32	RN1/16SE5602D
	R523,R524,R526,R528,R705	RS1/10S0R0J
	R708,R710,R711	RS1/10S0R0J
	R170	RS1/10S102J
	R703,R704	RS1/10S122J
	R232,R233,R239	RS1/10S152J
	R182,R186	RS1/10S471J
	R168,R169	RS1/10S750J
	R100,R101,R67,R68	RS1/10S912J
	VR201 (10kB)	DCS1056
	Other Resistors	RS1/16S###J
	OTHERS	
	J460 CONNECTOR ASSY	226404700
	JA10 YKB CONNECTOR	950001790
	JA11 YKB CONNECTOR	950001800
	CN1-CN4,CN9 4P PIN JACK	AKB7015
	CN482 CONNECTOR	B3B-XH-A
	JA8 2P PIN JACK (ORG)	DKB1027
	CN401 FFC CONNECTOR 12P	HLEM12S-1
	CN480 FFC CONNECTOR 15P	HLEM15S-1
	CN4022 FFC CONNECTOR 19P	HLEM19S-1
	CN481 FFC CONNECTOR 21P	HLEM21S-1
	CN4021 FFC CONNECTOR 24P	HLEM24S-1
	JA12-JA15 REMOTE CON. JACK	RKN1004
	JA7 2P PIN JACK	VKB1031

Mark No.	Description	Part No.
B	**TERMB ASSY**	
SEMICONDUCTORS		
IC14		AK5351-VF
IC107		BU4066BCF
IC12,IC16,IC17,IC2,IC5		NJM2068M
IC600		NJM2068M
IC8,IC9		NJM2100M
IC503-IC505		NJM4556AL
IC101,IC102		NJM4558M
IC1,IC14,IC15,IC18,IC4		NJM4580M
IC502,IC7		NJM4580M
IC506,IC507		TC74HC123AF
IC500,IC501		TC74HC14AF
IC12,IC13		TC74HC163AF
IC502		TC74HC86AF
IC500,IC501		TC74HCU04AF
IC10		TC7WU04F
IC19		TC9215AF
IC15		TC9271F
Q500		2SC1740S
Q114-Q117,Q501,Q507,Q508		2SC2878
Q511,Q522-Q529		2SC2878
Q1,Q19,Q2,Q20-Q24		2SC3326
Q3-Q8		2SC3326
Q506-Q509,Q511-Q513,Q515		DTA114EK
Q520		DTA114EK
Q101		DTA124ES
Q501-Q505,Q510,Q514		DTC114EK
Q516-Q519,Q521		DTC114EK
D504		1SS133
D1-D5,D500-D503		1SS355
D505-D517,D6		1SS355
SWITCH		
S101		945001240
COILS		
L101,L102,L600,L600		LRCA101J
L1-L8 (Chip Beads BK2125LM252)		VTL1105
CAPACITORS		
C108-C115,C198,C208		CCSQCH101J50
C197		CCSQCH220J50
C10,C102,C103,C11		CCSRCH101J50
C110-C119,C12,C120-C125		CCSRCH101J50
C13-C18,C186,C19,C193		CCSRCH101J50
C20,C5-C9,C92-C97		CCSRCH101J50
C173,C174		CCSRCH150J50
C514,C515,C517,C522		CCSRCH151J50
C525,C526,C532,C533		CCSRCH151J50
C217		CCSRCH220J50
C120-C123,C179-C182		CCSRCH270J50
C605,C606		CEAT471M16
C164-C166,C168,C169,C172		CEJQ100M16
C195,C602,C604,C608-C611		CEJQ100M16
C116-C119,C124,C125		CEJQ100M50
C127,C128,C131,C132		CEJQ100M50
C135-C138,C145,C146		CEJQ100M50
C157,C158,C169,C170,C194		CEJQ100M50
C199,C21,C213-C216,C218		CEJQ100M50
C22-C24,C27-C30,C509		CEJQ100M50
C51,C518,C52,C523,C532		CEJQ100M50
C55,C56,C83-C90		CEJQ100M50
C167,C170,C171,C601,C701		CEJQ101M10
C518,C520,C524,C531		CEJQ101M25
C501,C503,C511		CEJQ1R0M50
C141,C142,C153,C154		CEJQ220M25
C45-C48		CEJQ220M25
C162,C163		CEJQ221M6R3
C159,C160,C71-C74		CEJQ330M50
C520,C527		CEJQ470M16
C600,C601,C604		CEJQNP330M25
C508,C516,C519,C522,C523		CEJQNPR33M50
C530,C534,C536,C75,C76		CEJQNPR33M50
C79,C80		CEJQNPR33M50
C103,C106		CGCYX104K25
C1,C104-C107,C107-C109		CKCYF103Z50
C181,C196,C2-C4		CKCYF103Z50
C534-C537		CKCYF103Z50
C177,C178,C200-C203,C91		CKCYF473Z50
C189,C191,C211,C602,C618		CKSQYB103K50
C620,C621,C802,C803		CKSQYB103K50
C502,C519,C526,C529,C530		CKSQYB104K25
C700		CKSQYB104K25
C613,C614		CKSQYB222K50
C606,C607,C612,C616,C617		CKSRYB102K50
C101,C102,C104,C105		CKSRYB103K50
C126,C127,C151,C152		CKSRYB103K50
C160,C161,C175,C176		CKSRYB103K50
C182-C185,C187,C188,C190		CKSRYB103K50
C192,C192,C204-C207		CKSRYB103K50
C209,C210,C212,C25,C26		CKSRYB103K50
C31,C32,C37,C38		CKSRYB103K50
C49,C50,C504,C506,C506		CKSRYB103K50
C508,C512-C514,C521		CKSRYB103K50
C527-C529,C603,C619		CKSRYB103K50
C69,C70		CKSRYB103K50
C175,C177,C178,C183,C184		CKSRYB104K25
C187,C190,C191,C193-C198		CKSRYB104K25
C509,C510,C600,C603,C605		CKSRYB104K25
C185,C186		CKSRYB152K50
C615		CKSRYB222K50
RESISTORS		
R579-R582		RD1/2PM101J
R539,R552,R557,R571		RD1/4PU680J
R106,R107,R109,R110,R190		RN1/10SE1000D
R180,R181		RN1/10SE1001D
R104,R105,R120,R120,R121		RN1/10SE1003D
R177,R197		RN1/10SE1003D
R176		RN1/10SE1201D
R151,R178,R58,R62		RN1/10SE1203D
R111,R112,R114,R115		RN1/10SE4300D
R101-R103		RN1/10SE4702D
R144,R145,R156,R157		RN1/10SE4703D
R45,R46,R49,R50		RN1/10SE4703D
R300-R315		RN1/10SE7503D
R1,R104,R105,R108-R111		RN1/16SE1000D
R173,R2,R5,R6		RN1/16SE1000D
R96-R99		RN1/16SE1000D

Mark No.	Description	Part No.
	R136,R139,R148,R149	RN1/16SE1001D
	R33,R34,R37,R38	RN1/16SE1001D
	R208,R209,R216-R221	RN1/16SE1002D
	R123,R126,R127,R13,R134	RN1/16SE1003D
	R137,R14-R16,R507,R509	RN1/16SE1003D
	R536,R542,R542,R549,R553	RN1/16SE1003D
	R553,R79-R82,R92-R95	RN1/16SE1003D
	R135,R136	RN1/16SE1101D
	R195	RN1/16SE1201D
	R150,R162,R163,R196,R57	RN1/16SE1203D
	R61	RN1/16SE1203D
	R10,R11,R114,R115	RN1/16SE1302D
	R118,R119,R12,R9	RN1/16SE1302D
	R106,R107,R112,R113	RN1/16SE1502D
	R126-R129,R132,R133,R174	RN1/16SE1502D
	R191,R3,R4,R546-R548	RN1/16SE1502D
	R560,R7,R71,R72,R8	RN1/16SE1502D
	R122,R123	RN1/16SE1802D
	R500,R503	RN1/16SE2001D
	R164,R165,R193,R194	RN1/16SE2002D
	R537,R546,R550,R551,R558	RN1/16SE2201D
	R565,R570,R572	RN1/16SE2201D
	R204,R205	RN1/16SE2202D
	R545,R563,R567,R568	RN1/16SE2700D
	R222-R225	RN1/16SE3300D
	R140,R141,R152,R153,R175	RN1/16SE3301D
	R192,R39-R42	RN1/16SE3301D
	R118,R119	RN1/16SE3302D
	R516,R535,R545,R549	RN1/16SE4300D
	R83-R90	RN1/16SE4300D
	R539,R543,R561,R564	RN1/16SE4302D
	R75,R76	RN1/16SE4302D
	R554,R559,R561,R562,R566	RN1/16SE5101D
	R569,R577,R578	RN1/16SE5101D
	R116,R117,R124,R125	RN1/16SE5602D
	R198,R199,R31,R32	RN1/16SE5602D
	R130,R131	RN1/16SE6201D
	R124,R125	RN1/16SE7502D
	R523,R524,R526,R528,R705	RS1/10S0R0J
	R708,R710,R711	RS1/10S0R0J
	R170,R711,R713,R714	RS1/10S102J
	R513,R526,R534	RS1/10S104J
	R703,R704	RS1/10S122J
	R232,R233,R239	RS1/10S152J
	R182,R186	RS1/10S471J
	R108,R512,R516	RS1/10S473J
	R168,R169	RS1/10S750J
	R701,R703	RS1/10S823J
	R100,R101,R67,R68	RS1/10S912J
	VR101,VR201 (10k-B)	DCS1056
	Other Resistors	RS1/16S###J

OTHERS

JA5	NC3MAH-C	099820430
J500	PCB TERMINAL F4052	226500260
460	8P CABLE HOLDER	51048-0800
X1	LP-3.5 (11.2896MHz)	937006850
JA101	YKB CONNECTOR	950001790
CN510	3P CONNECTOR	B3B-PH-K
CN482,CN582	3P CONNECTOR	B3B-XH-A
CN401	12P CONNECTOR	HLEM12S-1
CN480,CN580	15P CONNECTOR	HLEM15S-1
CN4022	19P CONNECTOR	HLEM19S-1
CN583	20P CONNECTOR	HLEM20S-1
CN481,CN581	21P CONNECTOR	HLEM21S-1
CN4021	24P CONNECTOR	HLEM24S-1
JA102		VKN1147

C VR ASSY

SEMICONDUCTORS

IC63,IC64	BU4053BCF
IC76,IC79	BU4066BCF
IC702	LB1740
IC2,IC4	M5283P
IC54,IC55	NJM2068M
IC71	NJM2903M
IC26,IC27	NJM45556AD
IC45-IC48,IC6,IC65,IC67	NJM4558M
IC7,IC72,IC73,IC8	NJM4558M
IC10,IC11,IC13,IC16	NJM4580M
IC18,IC19,IC21,IC23-IC25	NJM4580M
IC28-IC42,IC49-IC53	NJM4580M
IC56,IC57,IC59,IC60	NJM4580M
IC703,IC704,IC74,IC9	NJM4580M
IC14	TC4S66F
IC701,IC75,IC78	TC74HC175AF
IC43,IC44,IC5	TC9162AF
IC17,IC66	TC9163AF
IC1,IC3	TC9164AF
IC12,IC20,IC700	TC9215AF
Q17	2SC1740S
Q10,Q19-Q30,Q700-Q705	2SC3326
Q9	2SC3326
Q31,Q38,Q803-Q805,Q807	2SC4081
Q809,Q811,Q813,Q815,Q817	2SC4081
Q39	2SD1862
Q1-Q8	2SD2114K
Q800-Q802,Q806,Q808,Q810	DTA124EK
Q812,Q814,Q816	DTA124EK
D1,D17-D19,D2	1SS355
D20-D29,D3,D4	1SS355
D31-D52	SLI-343YCW(RST)
D11-D16	SLR-342DU3F

SWITCHES

S3,S4	947000640
S9	947000660
S11-S23,S25	ASG7005
S26	ASX7011
S1,S2	DSH1036
S24	DSH1050
S5-S8	DSK1010

CAPACITORS

C103,C108,C229-C232,C27	CCSQCH101J50
C29,C3,C343,C345	CCSQCH101J50
C358,C359,C364,C4-C6	CCSQCH101J50
C74,C75	CCSQCH101J50
C278	CCSQCH220J50
C100,C101,C122,C339-C342	CCSQCH270J50

Mark No.	Description	Part No.
C38,C44,C45,C47-C49		CCSQCH270J50
C87,C88,C90,C91		CCSQCH270J50
C235-C242,C279		CCSQCH470J50
C255,C258		CCSRCH101J50
C118,C119,C123,C141-C146		CCSRCH270J50
C183-C188,C261-C265		CCSRCH270J50
C292,C293,C89,C92		CCSRCH270J50
C153-C158,C270,C271		CCSRCH271J50
C272		CCSRCH470J50
C106,C107,C11,C111,C112		CEAL100M16
C13,C15,C16,C171-C176		CEAL100M16
C256,C257,C259,C26,C260		CEAL100M16
C266,C267,C273,C280,C281		CEAL100M16
C302,C303,C326-C329,C33		CEAL100M16
C332,C333,C348,C349,C41		CEAL100M16
C46,C50,C51,C64-C69		CEAL100M16
C7,C70,C71,C712,C713		CEAL100M16
C732,C733,C76,C77,C8		CEAL100M16
C126,C127		CEAL101M16
C109,C113,C286,C287		CEAL330M25
C94-C97		CEAL330M25
C189-C194,C298,C299		CEAL470M16
C715,C716		CEAL470M16
C120,C121,C124,C125		CEALNPR33M50
C147-C152,C268,C269		CFTNA473J50
C177-C182,C282,C283		CFTNA563J50
C1,C2,C225,C226,C28		CKSQYB102K50
C344,C708-C710,C73		CKSQYB102K50
C10,C105,C110,C12,C129		CKSQYB103K50
C134,C14,C17,C18		CKSQYB103K50
C207-C216,C227,C228,C23		CKSQYB103K50
C233,C234,C243-C250		CKSQYB103K50
C290,C291,C300,C301		CKSQYB103K50
C316-C319,C32,C320,C321		CKSQYB103K50
C325,C335-C338,C34,C35		CKSQYB103K50
C350-C355,C36,C37		CKSQYB103K50
C386,C387,C39,C40		CKSQYB103K50
C400,C401,C405-C410		CKSQYB103K50
C412-C414,C42,C43		CKSQYB103K50
C52,C53,C55-C59,C711		CKSQYB103K50
C714,C717-C723,C78,C79		CKSQYB103K50
C82,C83,C85,C9		CKSQYB103K50
C98,C99		CKSQYB103K50
C284,C285,C288,C289,C334		CKSQYB104K25
C346,C347,C725		CKSQYB104K25
C19-C22,C24,C25		CKSQYB224K16
C30,C31		CKSQYB224K16
C102,C128,C130,C131		CKSRYB103K50
C135-C137,C139,C140		CKSRYB103K50
C195-C206,C217-C224		CKSRYB103K50
C306,C307,C312-C315		CKSRYB103K50
C322-C324,C330,C331		CKSRYB103K50
C373-C376,C402-C404,C54		CKSRYB103K50
C60-C63,C706,C707,C726		CKSRYB103K50
C728-C731,C80,C84,C86		CKSRYB103K50
C93		CKSRYB103K50
C104		CKSRYB104K25
C294,C295 (4700pF-50v)		DCE1008
C165-C170,C276,C277 (5600pF-50v)		DCE1009
C159-C164,C274,C275 (0.47mF-50v)		DCH1158
C254 (0.01mF-50v)		DCH1159

RESISTORS

Mark No.	Description	Part No.
R198-R201 (430)		DCN1137
R339		RD1/4PU101J
R774,R775		RD1/4PU332J
R141,R147,R166-R168,R171		RN1/10SE1001D
R183,R184,R375,R405-R408		RN1/10SE1001D
R222,R224,R371,R374		RN1/10SE1002D
R380,R381,R384,R385		RN1/10SE1002D
R387,R388,R390,R391,R56		RN1/10SE1002D
R61,R71,R75		RN1/10SE1002D
R105,R112,R17,R20		RN1/10SE1003D
R286-R291,R396,R397		RN1/10SE1003D
R409,R410,R43,R438,R439		RN1/10SE1003D
R527,R529,R60,R603,R604		RN1/10SE1003D
R63,R65,R69,R83		RN1/10SE1003D
R89-R95,R97,R98		RN1/10SE1003D
R66,R72		RN1/10SE1202D
R376		RN1/10SE1203D
R256-R261,R368,R369		RN1/10SE1300D
R133,R134,R137,R146		RN1/10SE1501D
R144,R149,R164,R165		RN1/10SE1502D
R202,R203,R78,R79		RN1/10SE1502D
R268-R271		RN1/10SE1800D
R129-R131,R136		RN1/10SE1801D
R101-R104,R107-R109,R11		RN1/10SE2202D
R110,R111,R113,R12,R121		RN1/10SE2202D
R124,R127,R128,R14,R148		RN1/10SE2202D
R150-R154,R157,R159		RN1/10SE2202D
R18,R19,R21,R22		RN1/10SE2202D
R295,R296,R301,R304		RN1/10SE2202D
R398,R399,R402,R404		RN1/10SE2202D
R440-R443,R64,R67,R70		RN1/10SE2202D
R73,R74,R77,R9		RN1/10SE2202D
R33-R40,R54,R55		RN1/10SE2702D
R58,R59		RN1/10SE2702D
R138,R142		RN1/10SE3001D
R116-R118,R46-R53		RN1/10SE3002D
R394,R395		RN1/10SE3301D
R192,R377		RN1/10SE3602D
R196		RN1/10SE4302D
R274-R277,R747-R750,R756		RN1/10SE4702D
R758,R762,R766		RN1/10SE4702D
R182,R191		RN1/10SE5101D
R68,R76		RN1/10SE5600D
R3,R5,R57,R62		RN1/10SE5602D
R132,R135,R139,R143		RN1/10SE7501D
R262-R267,R372,R373		RN1/10SE7502D
R716,R718,R720,R722,R724		RN1/16SE1000D
R726		RN1/16SE1000D
R155,R156,R564,R566		RN1/16SE1001D
R214-R221,R223,R225,R336		RN1/16SE1002D
R338,R363,R364,R367,R468		RN1/16SE1002D
R160,R161,R354,R41,R565		RN1/16SE1003D
R567		RN1/16SE1003D
R85,R99		RN1/16SE1102D
R178,R179,R340,R342,R345		RN1/16SE1502D
R244-R249,R272,R273		RN1/16SE1800D
R361,R362,R378,R379		RN1/16SE1800D

Mark	No.	Description	Part No.
		R232-R237,R355,R356	RN1/16SE1802D
		R343,R344,R469	RN1/16SE2002D
		R114,R115,R119,R120	RN1/16SE2202D
		R122,R123,R125,R126	RN1/16SE2202D
		R180,R181	RN1/16SE2202D
		R210,R211	RN1/16SE2701D
		R346,R352,R386,R389,R471	RN1/16SE3301D
		R193	RN1/16SE3602D
		R82,R96	RN1/16SE3902D
		R226-R231,R349,R350	RN1/16SE4301D
		R197	RN1/16SE4302D
		R278,R279,R382,R383	RN1/16SE4702D
		R543,R545,R549,R551	RN1/16SE5100D
		R557,R558,R702,R704,R706	RN1/16SE5100D
		R708,R709,R711,R727-R730	RN1/16SE5100D
		R238-R243,R280-R285	RN1/16SE5101D
		R359,R360,R392,R393	RN1/16SE5101D
		R250-R255,R353,R357,R358	RN1/16SE6202D
		R365,R366	RN1/16SE6202D
		R470	RN1/16SE6801D
		R715,R717,R719,R721,R723	RN1/16SE7500D
		R725	RN1/16SE7500D
		R100,R213	RS1/16S0R0J
		R511	RS1/16S101J
		R514,R517	RS1/16S102J
		R510,R512,R513,R516	RS1/16S103J
		R607-R613,R805	RS1/16S103J
		R476	RS1/16S104J
		R475	RS1/16S113J
		R782	RS1/16S153J
		R772	RS1/16S182J
		R194,R520,R521	RS1/16S223J
		R509	RS1/16S303J
		R515,R540,R541,R546,R547	RS1/16S332J
		R552-R555,R560-R563,R701	RS1/16S332J
		R703,R705,R707,R710,R712	RS1/16S332J
		R158,R770	RS1/16S473J
		R461	RS1/16S561J
		R176,R177	RS1/16S912J
	VR29	RK14K1240036	942001370
		VR25,VR26 (10KB)	DCS1050
		VR10-VR12,VR14-VR16 (10KB)	DCS1053
		VR22-VR24,VR27,VR28,VR3 (10KB)	DCS1053
		VR6-VR8 (10KB)	DCS1053
		VR13,VR2,VR21,VR4,VR5 (10KB)	DCS1054
		VR9 (10KB)	DCS1054
		VR1 (10KB)	DCS1055
		Other Resistors	RS1/10S###J

OTHERS

	11-16	LEDS-LH-5-6	225500220
	306	CONNECTOR ASSY-CF	226404660
		3P CABLE HOLDER	51048-0300
		5P CABLE HOLDER	51048-0500
		8P CABLE HOLDER	51048-0800
	CN301	CONNECTOR 12P	52492-1220
	CN3022	CONNECTOR 19P	52492-1920
	CN305	CONNECTOR 21P	52492-2120
	CN3021	CONNECTOR 24P	52492-2420
	CN304	CONNECTOR 28P	52492-2820
	CN350	CONNECTOR POST	B3B-PH-K
	CN3001-CN3005	B TO B CONNECTOR 9P	DKP3576
	CN371	CONNECTOR	HLEM31R-1

D CF ASSY

RESISTOR

		VR31 (10k-B Slide VR)	DCV1006

OTHERS

	CN336	MT CONNECTOR 6P	173979-6

E CFCURV ASSY

SWITCH

		S10	DSH1050

OTHERS

	J3701	CONNECTOR ASSY3-L60	226404680
	3701	3P CABLE HOLDER	51048-0300

F MAF ASSY

RESISTOR

		VR32 (10k-B Slide VR)	DCV1010

OTHERS

	CN335	B TO B CONNECTOR 9P	DKP3598

G CHF1-CHF4 ASSYS

SEMICONDUCTOR

		D10	GP1S94

RESISTOR

		R801	RD1/4PU181J
		R802	RS1/10S393J
		VR17 (10k-B Slide VR)	DCV1010

OTHERS

	CN331	B TO B CONNECTOR 9P	DKP3598

H MIC ASSY

CAPACITORS

		C370	CKCYF103Z50
		C253,C300	CKSQYB103K50

OTHERS

	J3071	CONNECTOR ASSY5-L60	226404690
	3071	5P CABLE HOLDER	51048-0500
	307	NCJ9FI-H-0	951001640
	J1	EARTH LAGU ASSY	DDX1170

I DSP ASSY

SEMICONDUCTORS

⚠		IC127 (800mA)	AEK7008
		IC122	AK4520A
		IC109,IC110,IC600	BU4053BCF
		IC113	K4F160812D-FC60

Mark	No.	Description	Part No.
	IC120		M5237ML
	IC116,IC117		NJM2100M
	IC101-IC106,IC124,IC601		NJM4558MD
⚠	IC121		NJM78M05FA
	IC108		PE5312B
	IC111		TC74HC74AF
	IC114		TC74HCT7007AF
	IC112,IC602		TC7S04F
	IC118,IC123		TC7WU04F
	IC115		TC9163AF
	IC119		XCB56364
	Q112		2SB1132
	Q111		2SC1740S
	Q110		2SC2458
	Q102-Q109		DTC124EK
	D129,D130		11E2
	D101-D106,D110,D111		1SS355
	D114-D128,D600,D601		1SS355
	D100,D107-D109,D112,D113		UDZS5.6B

COILS

L108	CHIP SOLID INDUCTOR	ATL7002
L109	CHIP COIL (4.7)	DTL1024
L110,L111		LRCA101J
L105,L106	CHIP SOLID INDUC.	QTL1013

CAPACITORS

C194,C195,C239,C244,C249	CCSQCH101J50
C253,C261,C262,C264,C265	CCSQCH101J50
C191,C198,C202	CCSQCH221J50
C282,C283	CCSRCH100D50
C217,C219-C221,C233,C238	CCSRCH101J50
C243,C250,C254,C263,C606	CCSRCH101J50
C112,C113,C293,C302	CCSRCH150J50
C257	CCSRCH221J50
C209,C210,C222,C223	CCSRCH270J50
C104,C105,C107,C108	CCSRCH470J50
C114-C117,C122,C123	CCSRCH470J50
C106,C109,C174,C175	CEHAR100M16
C180-C185,C203,C204	CEHAR100M16
C272,C273,C305	CEHAR100M16
C284	CEHAR100M50
C155,C186,C196,C229,C260	CEHAR101M10
C277,C281,C301	CEHAR101M10
C601,C602	CEHAR1R0M50
C101,C128,C129,C134,C135	CEHAR2R2M50
C138,C139	CEHAR2R2M50
C289,C290,C294-C297,C311	CEHAR470M16
C258	CEHAR4R7M50
C200,C201,C291	CEHAT221M6R3
C604,C605	CEHAT471M16
C187	CKSQYB102K50
C136,C137,C144,C145,C148	CKSQYB103K50
C188,C197,C199,C226,C228	CKSQYB103K50
C292,C300,C303,C607,C608	CKSQYB103K50
C141,C147,C156,C189	CKSQYB104K25
C205-C207,C240,C245,C248	CKSQYB104K25
C252,C256,C266,C267	CKSQYB104K25
C269,C270,C276,C298,C314	CKSQYB104K25
C230	CKSQYB562K50
C271	CKSRYB102K50
C118-C121,C124,C125	CKSRYB103K50
C130-C133,C140,C142,C150	CKSRYB103K50
C163-C171,C176-C179,C227	CKSRYB103K50
C278,C279,C299,C600,C609	CKSRYB103K50
C143,C151-C154,C157-C162	CKSRYB104K25
C172,C173,C212-C215,C234	CKSRYB104K25
C237,C242,C251,C255,C259	CKSRYB104K25
C268,C274,C306,C307,C310	CKSRYB104K25
C312	CKSRYB104K25
C224,C225	CKSRYB152K50
C102,C103	CKSRYB473K25
C110,C111 (10mF-10v)	DCH1160

RESISTORS

R282-R286	RAB4C0R0J
R170,R171,R175,R176,R178	RAB4C102J
R180,R182	RAB4C102J
R231	RAB4C473J
R255,R256	RN1/10SE1002D
R241	RN1/10SE2202D
R292,R293	RN1/10SE4702D
R244,R245	RN1/10SE8201D
R106	RN1/16SE1001D
R144,R145,R246,R247	RN1/16SE1002D
R253,R254,R257,R258	RN1/16SE1002D
R294,R295	RN1/16SE1202D
R243	RN1/16SE2202D
R134,R136	RN1/16SE2702D
R265-R268	RN1/16SE3300D
R296,R297	RN1/16SE6802D
R113	RN1/16SE9101D
R102,R174,R288,R614	RS1/10S0R0J
R233	RS1/10S101J
R232,R237,R238,R500,R501	RS1/10S102J
R602-R609	RS1/10S102J
R601	RS1/10S103J
R192	RS1/10S104J
R160	RS1/10S221J
R242,R248,R250,R251,R613	RS1/10S472J
R119,R221-R225	RS1/10S752J
R290	RS1/16S4301F
R289	RS1/16S7501F
Other Resistors	RS1/16S###J

OTHERS

X101	CERA. RESONATOR (4.9MHz)	DSS1105
X102	CERA. RESONATOR20MHz	DSS1110
X103	XTAL RES (OSC)(16.9MHz)	PSS1008
CN205	FCC CONNECTOR 21P	52492-2120
CN204	CONNECTOR 28P	52492-2820
CN209	CONNECTOR	B16B-PH-K
CN260	CONNECTOR 20P	HLEM20S-1
CN262	CONNECTOR 31P	HLEM31S-1
CN261	CONNECTOR 35P	HLEM35S-1

J EFFECT ASSY

SEMICONDUCTOR

IC100	NJM3404AM

SWITCHES

Mark	No.	Description	Part No.
	S100,S101		DSG1067
	CAPACITORS		
	C100,C101		CKSQYB102K50
	C102-C104		CKSQYB104K25
	RESISTORS		
	R100,R101		RN1/10SE2001D
	R102,R103		RN1/10SE2201D
	R104-R107		RN1/10SE2202D
	R108,R109		RN1/10SE3901D
	R110,R111		RN1/10SE4702D
	R112,R113		RN1/10SE8201D
	OTHERS		
	J3101	CONNECTOR ASSY8-L30	226404701
	3101	8P CABLE HOLDER	51048-0800

K LED ASSY

	SEMICONDUCTORS		
	IC100,IC101		LB1740
	IC100		NJM3404AM
	Q100-Q111		2SD1862
	D175,D191,D192		1SS133
	D104-D110,D115-D121		DEL1034
	D126-D132,D137-D143		DEL1034
	D148-D154,D159-D165		DEL1034
	D100-D103,D111-D114		DEL1035
	D122-D125,D133-D136		DEL1035
	D144-D147,D155-D158		DEL1035
	D170-D172,D182-D185		NKR131S
	D166-D169,D176-D181		SLR-342DUTB7
	D173,D174,D186-D190		SLR-342VRTB7
	SWITCHES		
	S102		948000450
	S100,S101		DSG1067
	CAPACITORS		
	C370		CKCYF103Z50
	C100,C101		CKSQYB102K50
	C253,C300		CKSQYB103K50
	C102-C104		CKSQYB104K25
	C100,C101 (0.01/50v)		DCH1159
	RESISTORS		
	R110-R113		RD1/4PU181J
	R114-R116,R133,R135-R137		RD1/4PU390J
	R101,R103,R105,R107,R109		RD1/4PU473J
	R118-R120		RD1/4PU473J
	R121,R122,R130-R132,R134		RD1/4PU560J
	R143,R146,R148		RD1/4PU560J
	R123-R129,R138-R142,R144		RD1/4PU620J
	R145,R147		RD1/4PU620J
	R100,R101		RN1/10SE2001D
	R102,R103		RN1/10SE2201D
	R104-R107		RN1/10SE2202D
	R108,R109		RN1/10SE3901D
	R110,R111		RN1/10SE4702D
	R112,R113		RN1/10SE8201D
	Other Resistors		RS1/10S###J
	OTHERS		
		LEVEL METER HOLDER	224301290
	J250	1007C26BL55	226404790
	J251	1007C26WH140	226404800
	J252	1007C26RD190	226404810
	3081	3P CABLE HOLDER	51048-0300
	3071	5P CABLE HOLDER	51048-0500
	3101	8P CABLE HOLDER	51048-0800
	CN100	CONNECTOR 35P	52492-3520
	J1		DDX1170

L REG ASSY

	SEMICONDUCTORS		
⚠	IC550		NJM7815FA
⚠	IC552		NJM78M08FA
⚠	IC553		NJM79M08FA
⚠	IC600		NJM79M15FA
⚠	IC551		NJM7915FA
⚠	D573,D574		11EQS06
	RESISTORS		
	All Resistors		RS1/10S###J
	OTHERS		
		HEATSINK VR	225300450
	J152	CONNECTOR ASSY	226404710
	152	12P CABLE HOLDER	51048-1200
		SCREW	BBZ30P060FMC

M POWER ASSY

	SEMICONDUCTORS		
⚠	IC555-IC557 (1.25A)		AEK7010
⚠	IC558 (4A)		AEK7018
⚠	IC561		NJM78M08FA
⚠	IC554		PQ05RR12
	Q551		2SC2458
⚠	Q550		2SD2406
	D563,D999		11E2
	D565,D571		11EQS06
	D562		1SS133
⚠	D550		MTZJ6.2B
⚠	D5521-D5524		RB060L-40
⚠	D551		S2VB20-F1
⚠	D559-D561		S5688G
	CAPACITORS		
	C570		CEHANP4R7M50
	C562		CEHAT101M10
	C554,C555		CEHAT101M16
	C564		CEHAT103M16
	C567		CEHAT221M16
	C561,C572		CEHAT330M25
	C552,C553,C601		CEHAT470M25
	C571		CEHAT4R7M50
	C550,C551,C563		CKCYF103Z50
	C558-C560,C565,C566		CKSQYB103K50
	C568,C569,C602		CKSQYB103K50
	C556,C557 (3300/35)		DCH1132
	RESISTORS		
	R554,R556		RD1/4PU102J

6. ADJUSTMENT

There is no information to be shown in this chapter.

Mark	No.	Description	Part No.
	R551		RD1/4PU103J
	R555		RD1/4PU104J
	R557-R559		RD1/4PU223J
	R550		RD1/4PU561J
	R552		RD1/4PU562J
	R553		RD1/4PU822J

OTHERS

		TUBE	225401930
	CN121	8P CONNECTOR	52147-0810
	CN152	12P CONNECTOR	52147-1210
	CN119	KR CONNECTOR	B16B-PH-K
⚠	CN2	3P-VH CONNECTOR	B3P5-VH
		SCREW	BMZ30P060FMC
		HEAT SINK	DNG1066
		HEAT SINK	DNG1085
	CN4	5P CONNECTOR	KPC5
		SCREW	PMH26P120FMC
⚠	CN1	AC CORD SOCKET	RKP1751
	H1,H2	FUSE HOLDER	RKR1003
	KN1,KN2		VNF1084

N TRANS ASSY

SWITCH

⚠	S1	DSA1028

COIL

⚠	L1	LINE FILTER	VTL-004

CAPACITORS

⚠	C1 (3300P/250V)	ACG7030
⚠	C2,C3 (10000P/250V)	ACG7033

OTHERS

	J4	5-L125	226404720
	J101	CONNECTOR ASSY	226404750
	4	5P CABLE HOLDER	51052-0500

O PSW ASSY

SWITCH

⚠	S1	AC SWITCH	DSA1028

CAPACITOR

⚠	C1 (3300P/AC250V)	ACG7030

RESISTORS

	All Resistors	RS1/10S###J

OTHERS

⚠	J22	CONNECTOR ASSY	226404670
⚠	J32	CONNECTOR ASSY	226404671

P HP ASSY

RESISTORS

	R502-R504	RS1/10S0R0J

OTHERS

	J3081	CONNECTOR ASSY	226404680
	JA302	YKB CONNECTOR	950001700
	3081	3P CABLE HOLDER	51048-0300

7. GENERAL INFORMATION

7.1 DIAGNOSIS

■ How to Enter the Test Mode

1. Power supply OFF
2. EFFECT MIX: OFF
3. Turn ON the power while pressing the EFFECT Key and ROLL Key.

When entered the test mode, [F] is displayed on the lower 7 seg and test mode starts when releases the Key.
Then the LED indication (lighting) will change when presses the EFFECT key as follows.

	Level Meter	7 SEG	BPM CH	BPM H/L	EFFECT CH	BEAT LED
①	Lights out	All "0" display	Lights out	Lights out	CH-1 lighting	1/2 LED lighting
②	-15 lighting	All "1" display	CH-1 lighting	LowLED lighting	CH-2 lighting	2/3 LED lighting
③	-10 lighting	All "2" display	CH-2 lighting	HighLED lighting	CH-3 lighting	1/1 LED lighting
④	-7 lighting	All "3" display	CH-3 lighting	Repeat ① to ③ afterward	CH-4 lighting	2/1 LED lighting
⑤	-4 lighting	All "4" display	CH-4 lighting		MIC lighting	4/1 LED lighting
⑥	-2 lighting	All '5' display	Repeat ① to ⑤ afterward		Master lighting	Repeat ① to ⑤ afterward
⑦	0 lighting	All "6" display			Repeat ① to ⑥ afterward	
⑧	2 lighting	All "7" display				
⑨	5 lighting	All "8" display				
⑩	9 lighting	All "9" display				
⑪	14 lighting	Repeat ① to ⑩ afterward				
⑫	-22 lighting					
	Repeat ② to ⑫ afterward					

	Indication A/B	FADER START	EFFECT MIX Key	CH Monitor	EFFECT Key
①	Lights out	Lights out	Lights out	Lights out	Lighting
②	Indication A lighting	CH1 lighting	ECHO lighting	CH-1 monitor lighting	Lighting
③	Indication B lighting	CH2 lighting	ZIP lighting	CH-2 monitor lighting	Lights out
④	Repeat ① to ③ afterward	CH3 lighting	ROLL lighting	CH-3 monitor lighting	Repeat ① to ③ afterward
⑤		CH4 lighting	Repeat ② to ④ afterward	CH-4 monitor lighting	
⑥		Repeat ② to ⑤ afterward		Master monitor lighting	
⑦				Effect monitor lighting	
				Repeat ② to ⑦ afterward	

4. When release from the test mode, return to normal mode by turn on the power once again in the status that nothing presses.

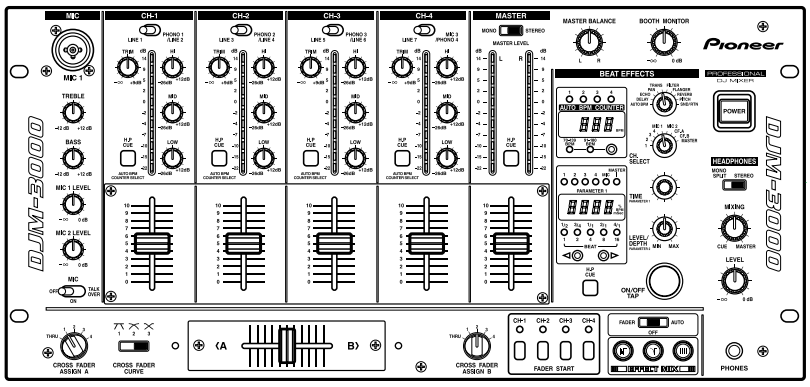

■ Power ON

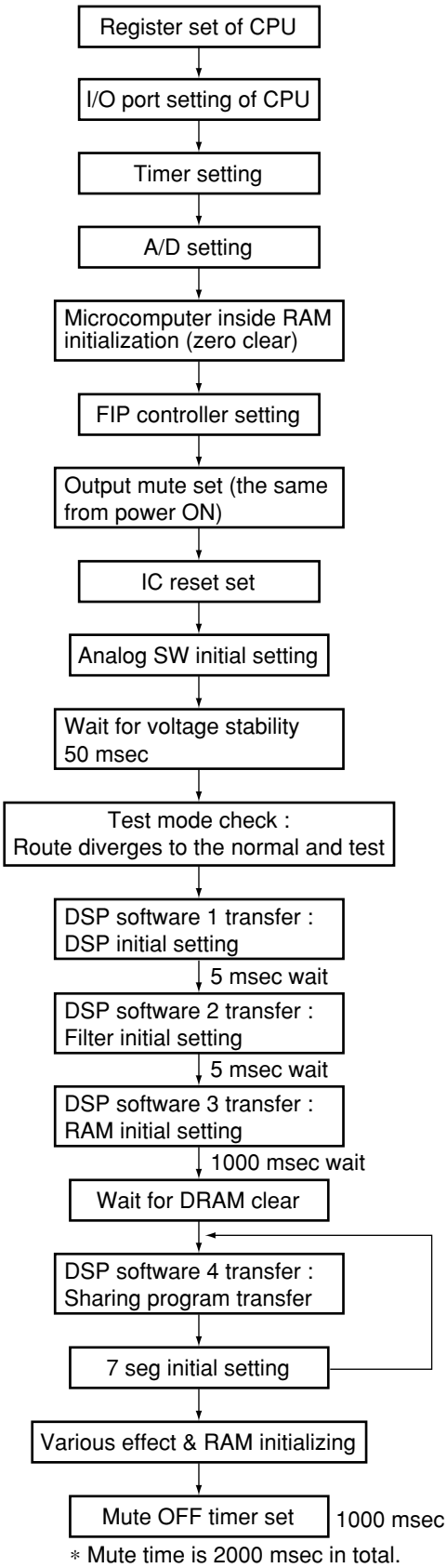

∗ Mute time is 2000 msec in total.

■ Main Start

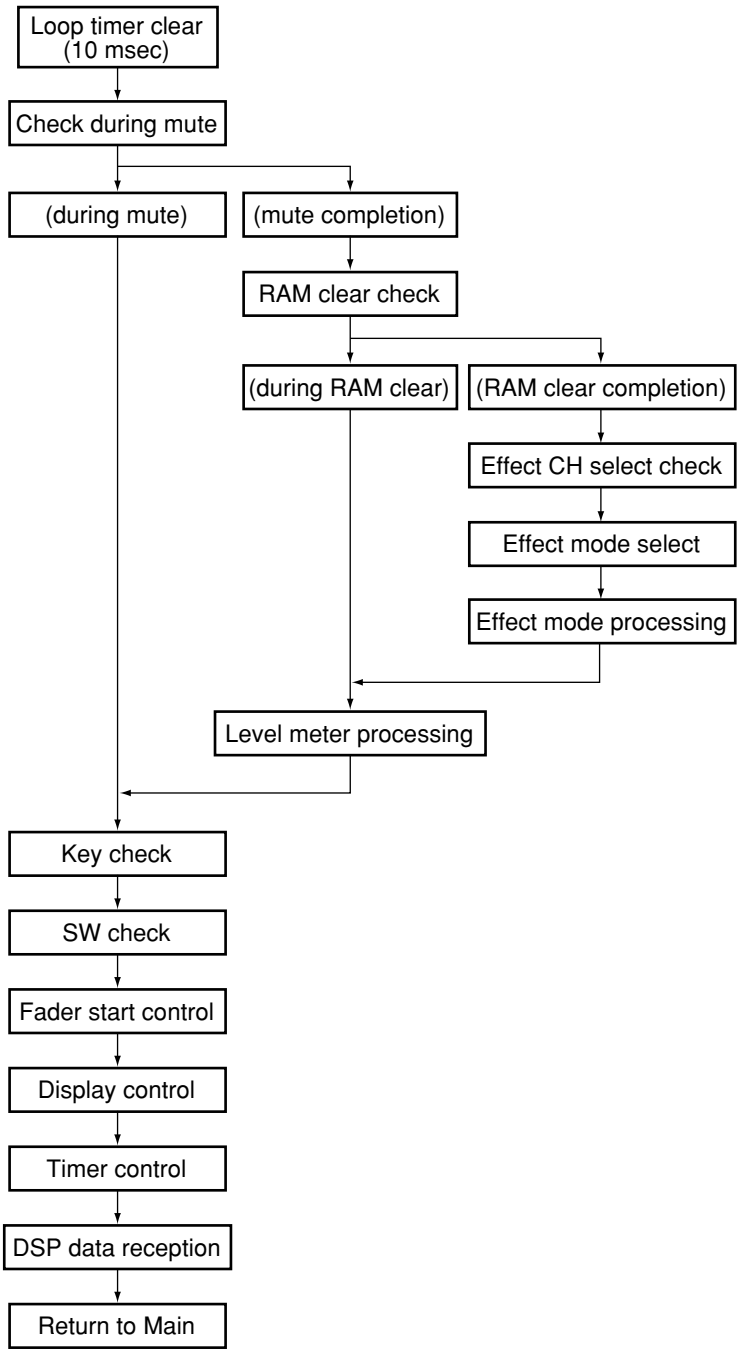

7.1.1 DISASSEMBLY

Fader VR Section

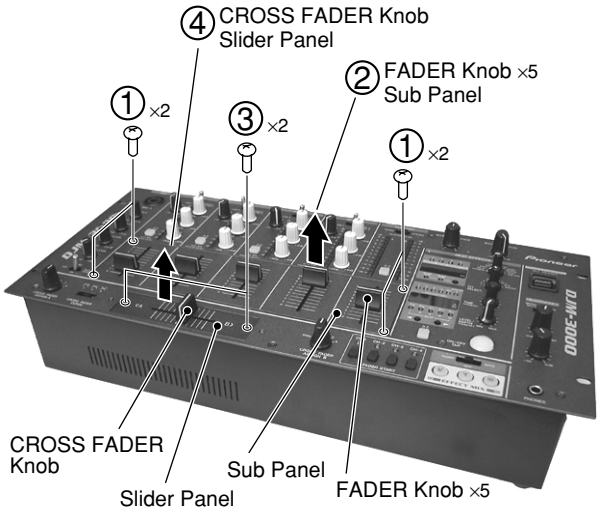

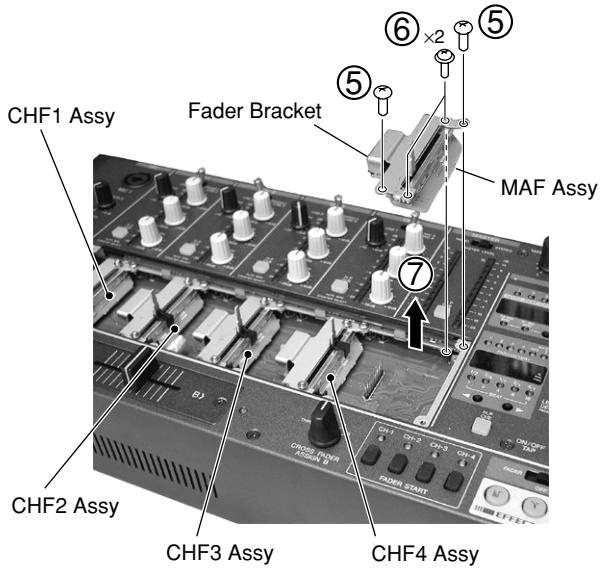

⑧ Remove other Fader VR Assys (CHF1 to CHF4 Assys) as same as steps ⑤ to ⑦.

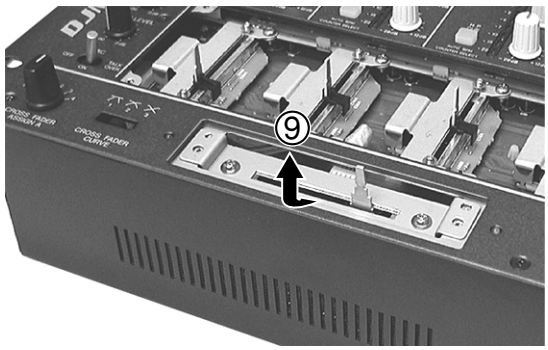

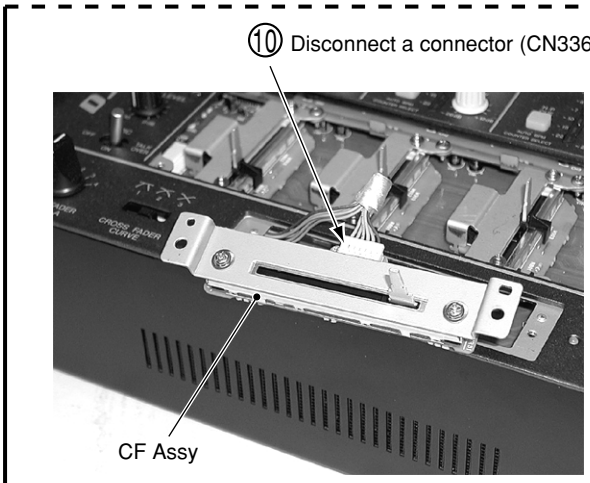

Control Panel Section

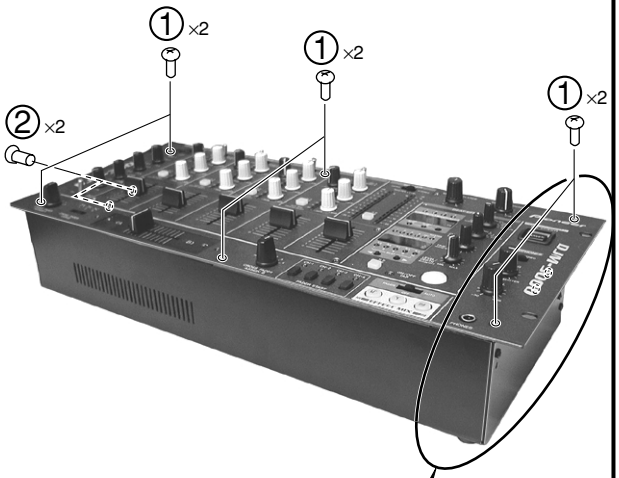

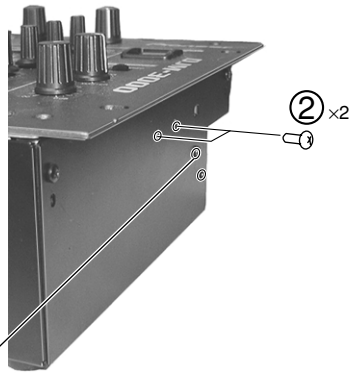

Caution:
These one screws are for the power switch section. Do not remove two screws because the power supply may short circuit.

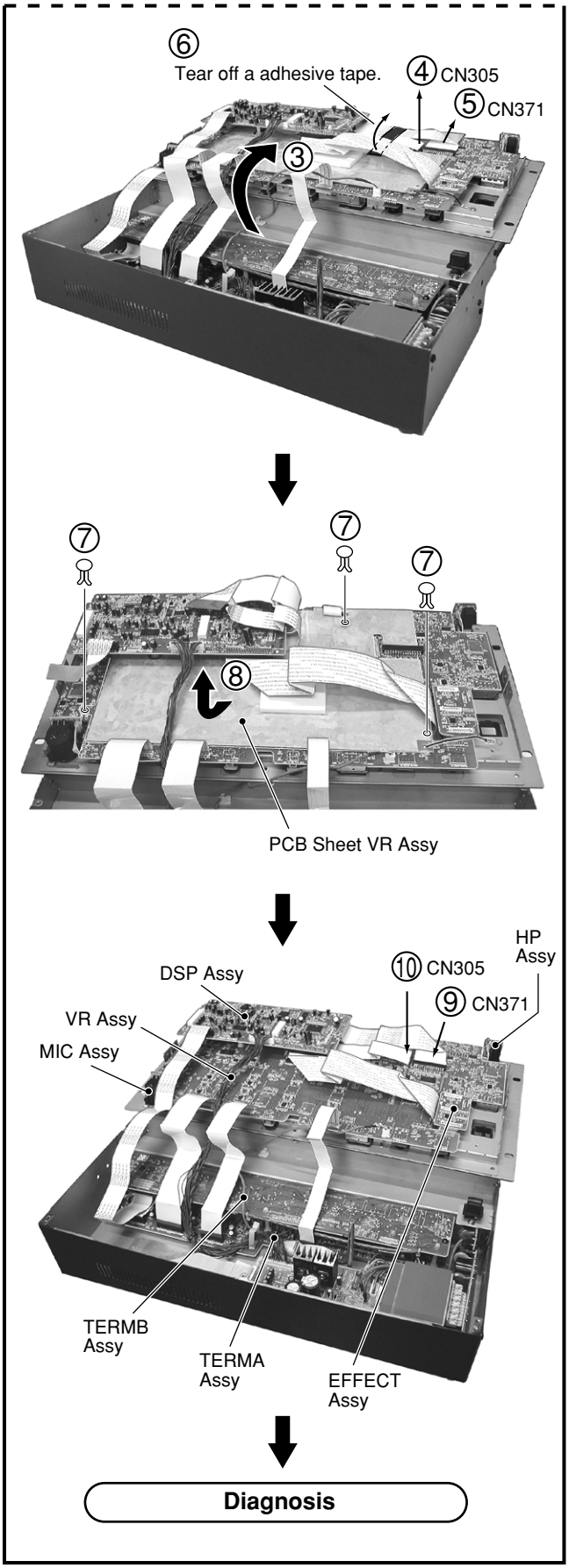

■ TERMA and TERMB Assys

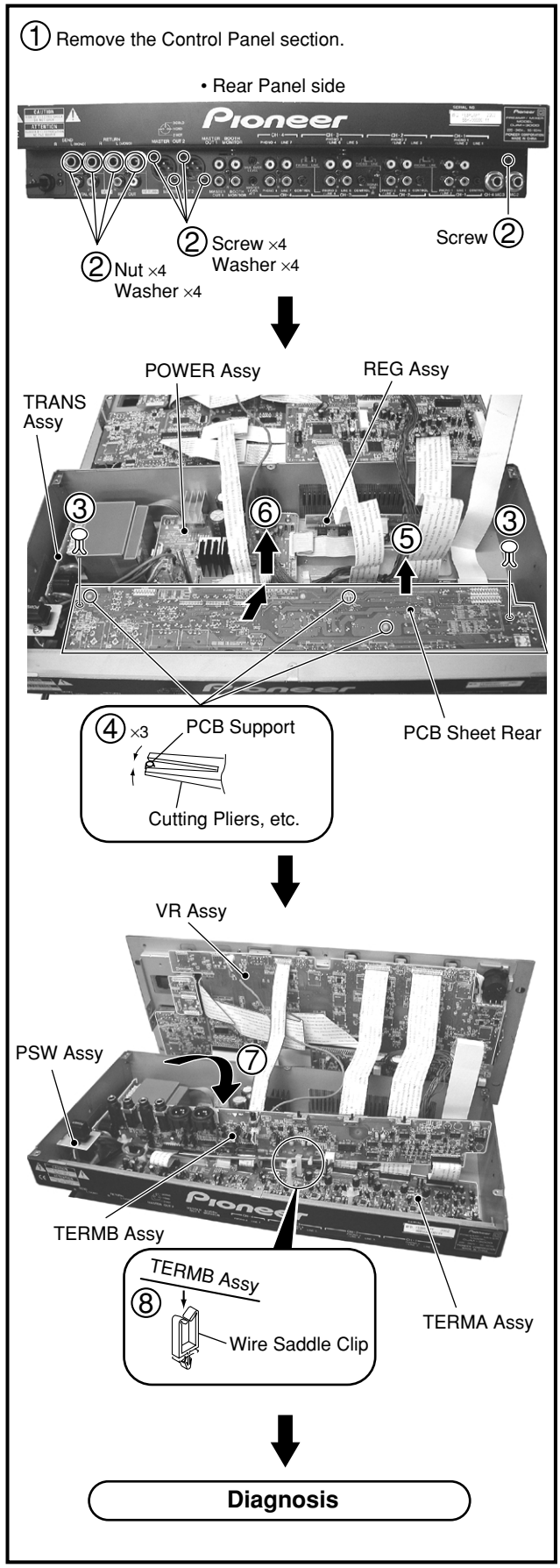

7.2 PARTS

7.2.1 IC

• The information shown in the list is basic information and may not correspond exactly to that shown in the schematic diagrams.

■ K4F160812D-FC60 (DSP ASSY: IC113)

• CMOS DRAM

● Block Diagram

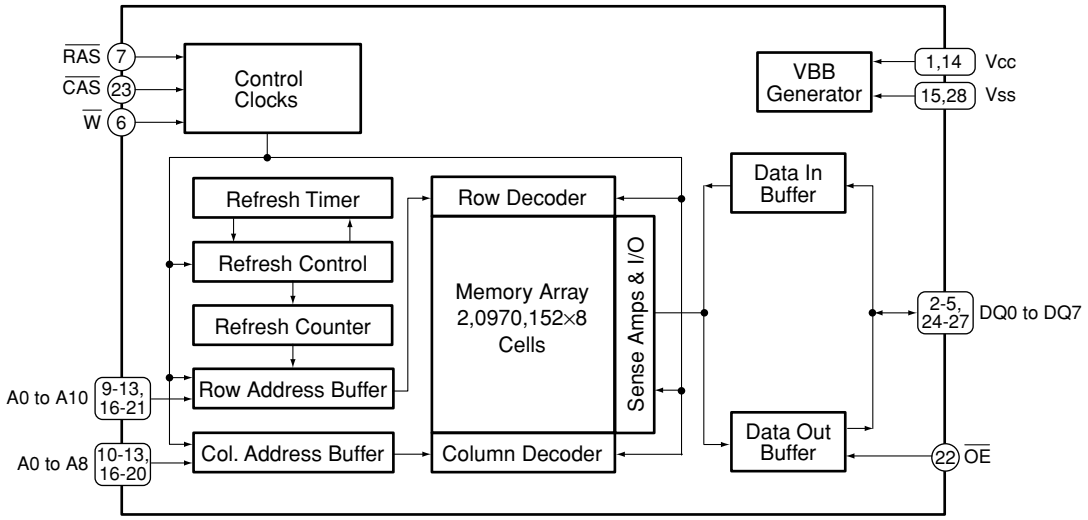

● Pin Arrangement (Top View)

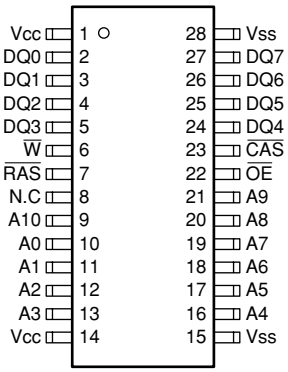

● Pin Function

No.	Pin Name	Pin Function
1	Vcc	Power supply (+3.3V)
2	DQ0	Data In/Out
3	DQ1	
4	DQ2	
5	DQ3	
6	$\overline{W}$	Read/Write input
7	$\overline{RAS}$	Row address Strobe
8	N.C	No connection
9	A10	Address inputs
10	A0	
11	A1	
12	A2	
13	A3	
14	Vcc	Power supply (+3.3V)
15	Vss	Ground
16	A4	Address input
17	A5	
18	A6	
19	A7	
20	A8	
21	A9	
22	$\overline{OE}$	Data output enable
23	$\overline{CAS}$	Column address strobe
24	DQ4	Data In/Out
25	DQ5	
26	DQ6	
27	DQ7	
28	Vss	Ground

7.3 OPTIONAL PARTS

OPTIONAL (DJC-3000RV Rotary Volume Kit)

7-3-1. EXPLODED VIEWS and PARTS LIST

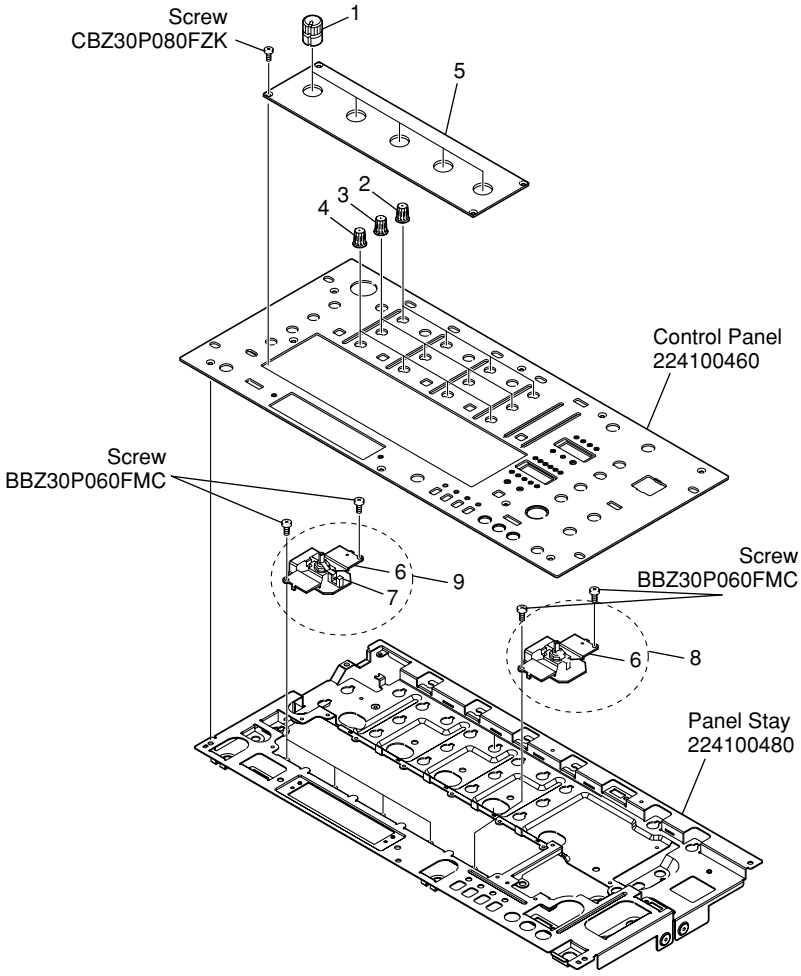

OPTIONAL PARTS LIST

Mark	No.	Description	Part No.
	1	Fader Knob (AL) Assy	DXA1931
	2	VR Knob (SR)	DAA1159
	3	VR Knob (SY)	DAA1160
	4	VR Knob (SG)	DAA1161
	5	Sub Panel (RV)	DAH2136
	6	Fader Bracket(RV)	DNF1673
	7	Detect Arm (RV)	DNK4029
	8	MF VR ASSY-S	DXX2517
	9	CHF VR ASSY-S	DXX2518

7-3-2. SCHEMATIC DIAGRAM and PARTS LIST

	MASTER ASSY	CH1 to CH4 ASSY
UNIT No.	DWX2258	DWX2259
ASSY NAME	MF VR ASSY	CHF VR ASSY
PCB No.	DNP2031	DNP2032

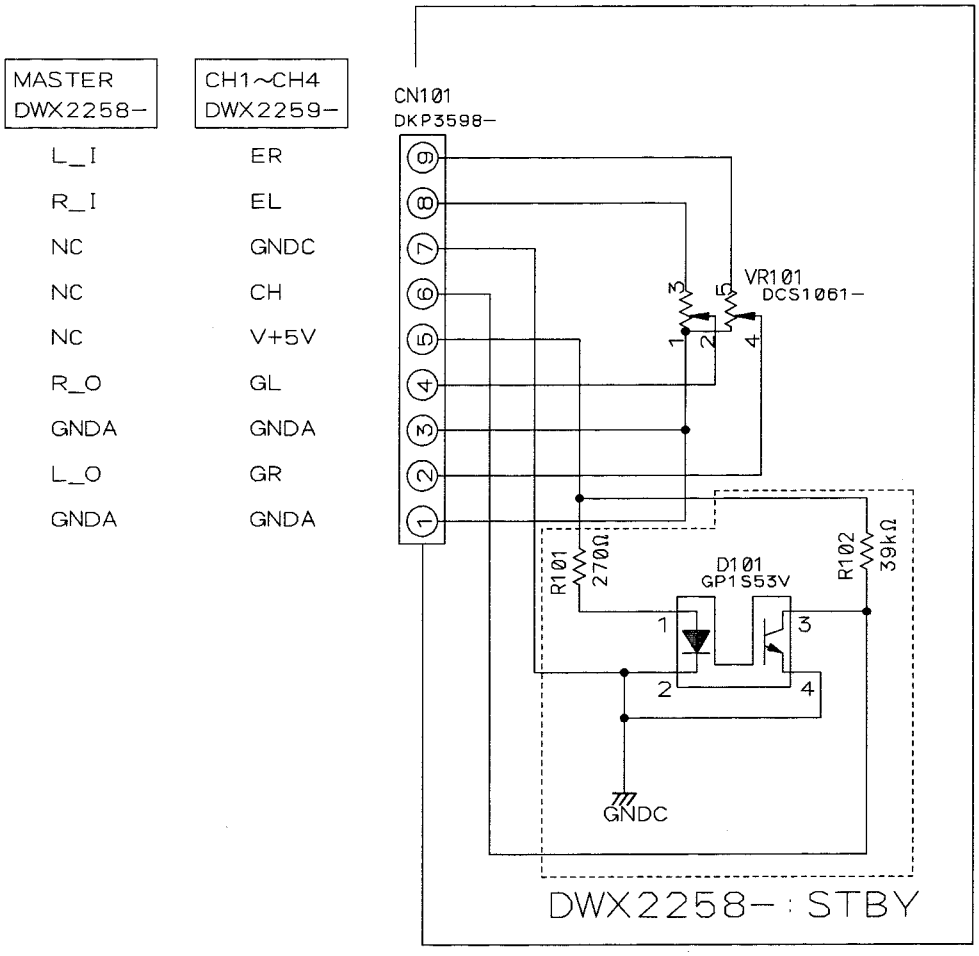

PCB PARTS LIST (DWX2258)

Mark	No.	Description	Part No.
VR101		Volume	DXA1931
CN101		B TO B Connector	DKP3598

PCB PARTS LIST (DWX2259)

Mark	No.	Description	Part No.
D101		Phot interrupter	GP1S53V
CN101		B TO B Connector	DKP3598
R101		Resistor	RD1/4PU271J
R102		Resistor	RD1/4PU393J
VR101		Volume	DXA1931

7-3-3. PCB DIAGRAM

MF VR ASSY

SIDE A

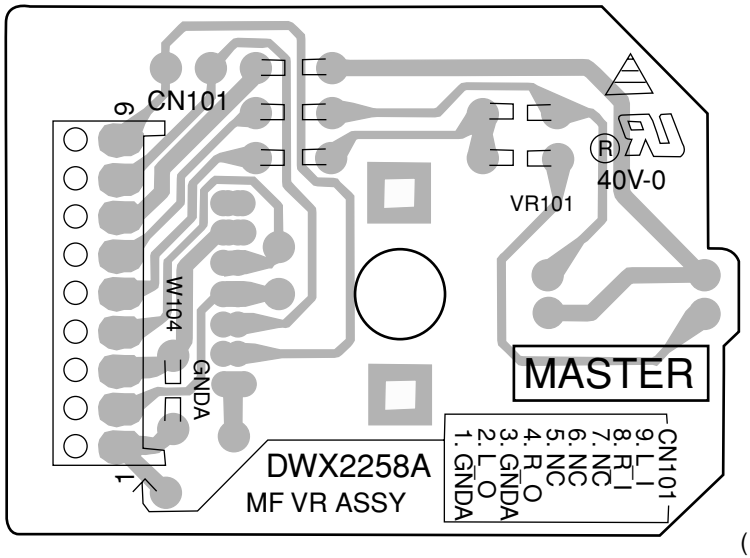

(DNP2031-A)

CHF VR ASSY

SIDE A

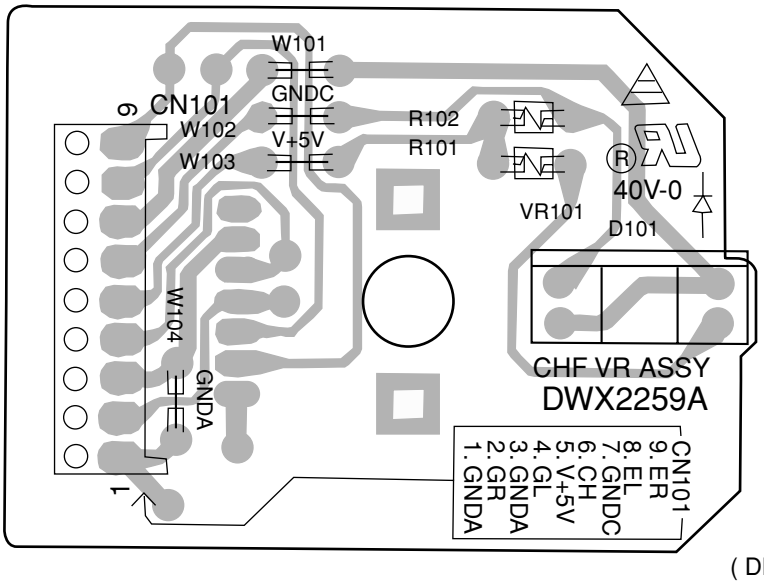

(DNP2032-A)

8. PANEL FACILITIES

8.1 PANEL FACILITIES

■ Control Panel

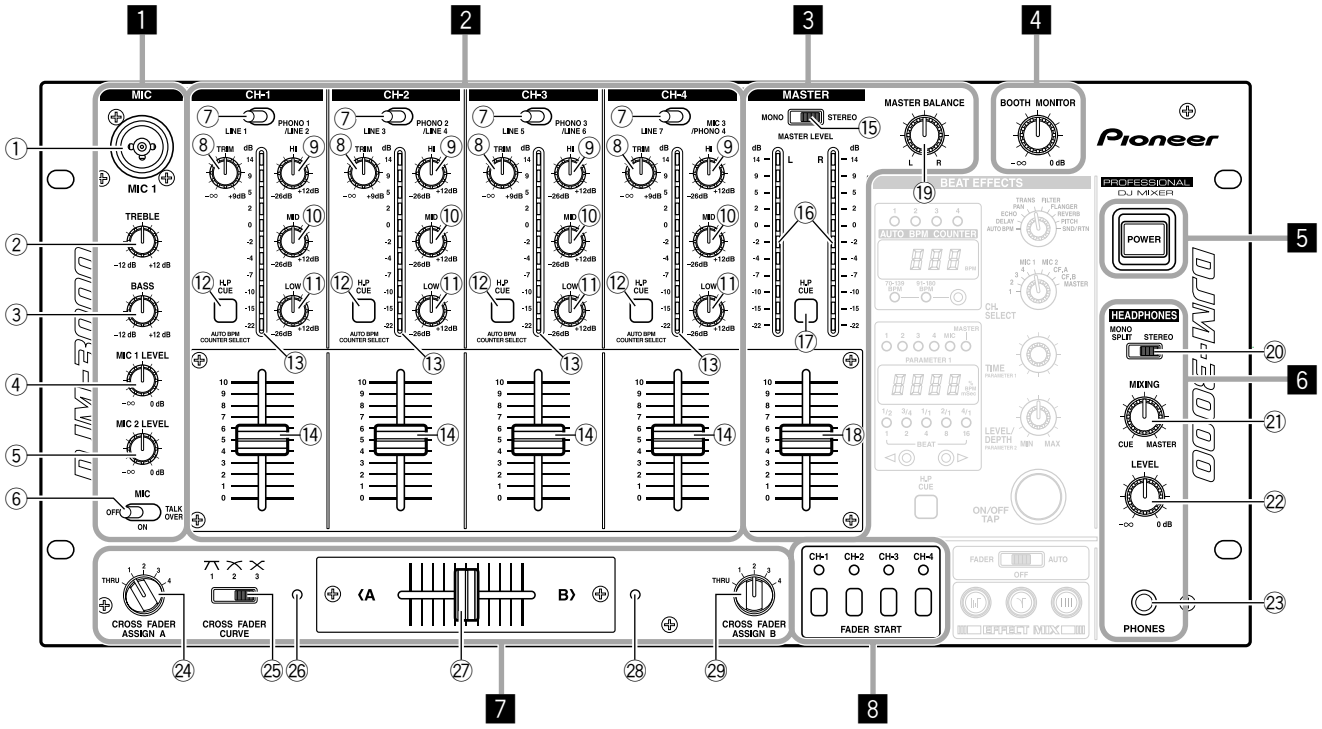

1 MIC (Microphone Controls)

① MIC 1 input jack
Use to connect a microphone with either XLR or PHONE type jack.

② TREBLE control
Adjusts high-range frequencies on microphone 1 and 2.
Center click position is provided for flat response.
Rotate the knob clockwise to augment treble response (to +12dB), and rotate counterclockwise to diminish treble response (to –12 dB).

③ BASS control
Adjusts low-range frequencies on microphone 1 and 2.
Center click position is provided for flat response.
Rotate the knob clockwise to augment bass response (to +12dB), and rotate counterclockwise to diminish base response (to –12 dB).

④ MIC 1 LEVEL
Controls sound volume on microphone 1 (attenuation: –∞ to 0 dB)

⑤ MIC 2 LEVEL
Controls sound volume on microphone 2 (attenuation: –∞ to 0 dB)

⑥ MIC switch
Use to select microphone input.
OFF: Disables microphone 1 and 2
ON: Enables microphone 1 and 2
TALK OVER: Enables microphone 1 and 2 while attenuating other sound levels. The amount of attenuation can be controlled by setting the rear-panel TALK OVER LEVEL, within the range –4 dB to –20 dB.

2 CH-1 to CH-4 (Channel Input Controls)

⑦ Input selector switches
Use to select an input source from among the components connected to the various channels.
CH-1: Switches between LINE 1 and PHONO 1/LINE 2
CH-2: Switches between LINE 3 and PHONO 2/LINE 4
CH-3: Switches between LINE 5 and PHONO 3/LINE 6
CH-4: Switches between LINE 7 and MIC 3/PHONO 4
- On CH-1 to CH-3, the rear panel PHONO/LINE switches are used to switch between PHONO 1, 2, 3 and LINE 2, 4, and 6.
- On CH-4, switching between MIC 3 and PHONO 4 is based on the presence/absence of a plug in the MIC 3 connector (when a plug is inserted, MIC 3 is selected).

⑧ TRIM control
Use to control the input signal level.
Rotate clockwise to increase the level (to +9 dB); rotate counterclockwise to decrease the level (to –∞)

⑨ HI control (high-range equalizer)
Use to adjust high-range frequency of input.
When the dial is set to the center click setting, flat response is provided.
Rotate clockwise to increase response (to +12 dB), and rotate counterclockwise to decrease response (to –26 dB).

⑩ MID control (mid-range equalizer)
Use to adjust mid-range frequency of input.
When the dial is set to the center click setting, flat response is provided.
Rotate clockwise to increase response (to +12 dB), and rotate counterclockwise to decrease response (to –26 dB).

⑪ LOW control (low-range equalizer)
Use to adjust low-range frequency of input.
When the dial is set to the center click setting, flat response is provided.

Rotate clockwise to increase response (to +12 dB), and rotate counterclockwise to decrease response (to –26 dB).

⑫ H.P CUE (Headphones cue switch)
When this switch is pressed it lights orange and the corresponding channel is output to headphones. When the switch is pressed again the light goes out and the channel's output to the headphones is cut.
When the beat effector function is set to AUTO BPM, this switch functions to select the BPM display channel.

⑬ Peak level meter
Peak levels are displayed as they occur and maintained for 2 seconds.
Displays output level before channel fader adjustment.
Displayable range is from –22 dB to +14 dB.

⑭ Channel fader lever
Use to adjust the sound level at each channel.

3 MASTER (Master Controls)

⑮ MONO/STEREO selector switch
Use to select whether the master output and booth monitor output are monaural or stereo.

⑯ MASTER LEVEL meter
Displays output level following adjustment of the MASTER fader lever, and holds the display for 2 seconds. Displayable range is from –22 dB to +14 dB.

⑰ H.P CUE (Headphones cue switch)
When this switch is pressed it lights orange and the master output is heard in the headphones. When the switch is pressed again the light goes out and the master output to the headphones is cut.

⑱ MASTER fader lever
Use to control the master output level.
The rear panel MASTER LEVEL ATT. control can also be used to reduce the output level.

⑲ MASTER BALANCE control
Use to adjust the balance of right-left channels for master output and booth monitor output.

4 BOOTH MONITOR Control

Use to adjust the output at the BOOTH MONITOR connectors on the rear panel. Not affected by the MASTER fader lever (⑱).

5 POWER Switch

6 HEADPHONES Controls

⑳ MONO SPLIT/STEREO selector switch
Use to select whether to split monitor sound on the left and right of the headphones or to keep sound in stereo form.
When set to MONO SPLIT, the headphones output is set to 2-channel monaural; the Left channel becomes the source selected with the H.P CUE switch, while the Right channel becomes the master output sound (only when MASTER H.P CUE switch is set to ON).

㉑ MIXING control
Use to adjust the headphones monitor sound.
When rotated fully clockwise, the master output sound only is heard (only when MASTER H.P CUE switch is set to ON).
When rotated fully counterclockwise, only the channel selected with the H.P CUE switch (other than MASTER) is heard.
At the center click position, the master output and source selected with the H.P CUE switch are at equal levels.

㉒ LEVEL control
Use to control the headphones monitor level. When one of CH-1 to CH-4 is selected, this control is not affected by the MASTER fader lever (⑱) and the MASTER BALANCE control (⑲).

㉓ PHONES (headphones jack)

7 Cross Fader Controls

㉔ CROSS FADER ASSIGN A switch
When using the cross fader with two sources (A, B), this switch selects the source assigned to A.
THRU: When cross fader is not used, sets to THRU.
1-4: Use to select the channel (CH-1 to CH-4) assigned to A.
Channels other than those assigned to A and B can be output without passing through the cross fader.

㉕ CROSS FADER CURVE selector switch
Use to select one of three rising curve patterns for the cross fader function.

㉖ Fader display A
During the effect mix mode, displays the output of sounds from the channel selected with the CROSS FADER ASSIGN A switch.

㉗ Cross fader lever
Use to adjust the mix of sounds from the sources assigned to A and B by the ASSIGN switches (㉔) and (㉙).

㉘ Fader display B
During the effect mix mode, displays the output of sounds from the channel selected with the CROSS FADER ASSIGN B switch.

㉙ CROSS FADER ASSIGN B switch
When using the cross fader with two sources (A, B), this switch selects the source assigned to B.
THRU: When cross fader is not used, sets to THRU.
1-4: Use to select the channel (CH-1 to CH-4) assigned to B.
Channels other than those assigned to A and B can be output without passing through the cross fader.

8 FADER START Switches

CH-1, CH-2, CH-3, CH-4
When a CD player (CMX-3000, CMX-5000, CDJ-1000, CDJ-100S, CDJ-700S or CDJ-500II) is connected to one of the above channels of this unit via a control cord, the CD player's CUE START/STOP operation will start when the channel fader is moved from "0" upwards, and will stop (back cue) when the channel fader is returned to "0". The indicator of the selected channel will light orange during this operation. Also, if a channel is assigned to the cross fader, the cross fader is given priority; when the Cross fader lever begins moving from the A side toward B side, the CD player assigned to the B side will start, and when the lever reaches the B side, the A side source will stop (back cue).

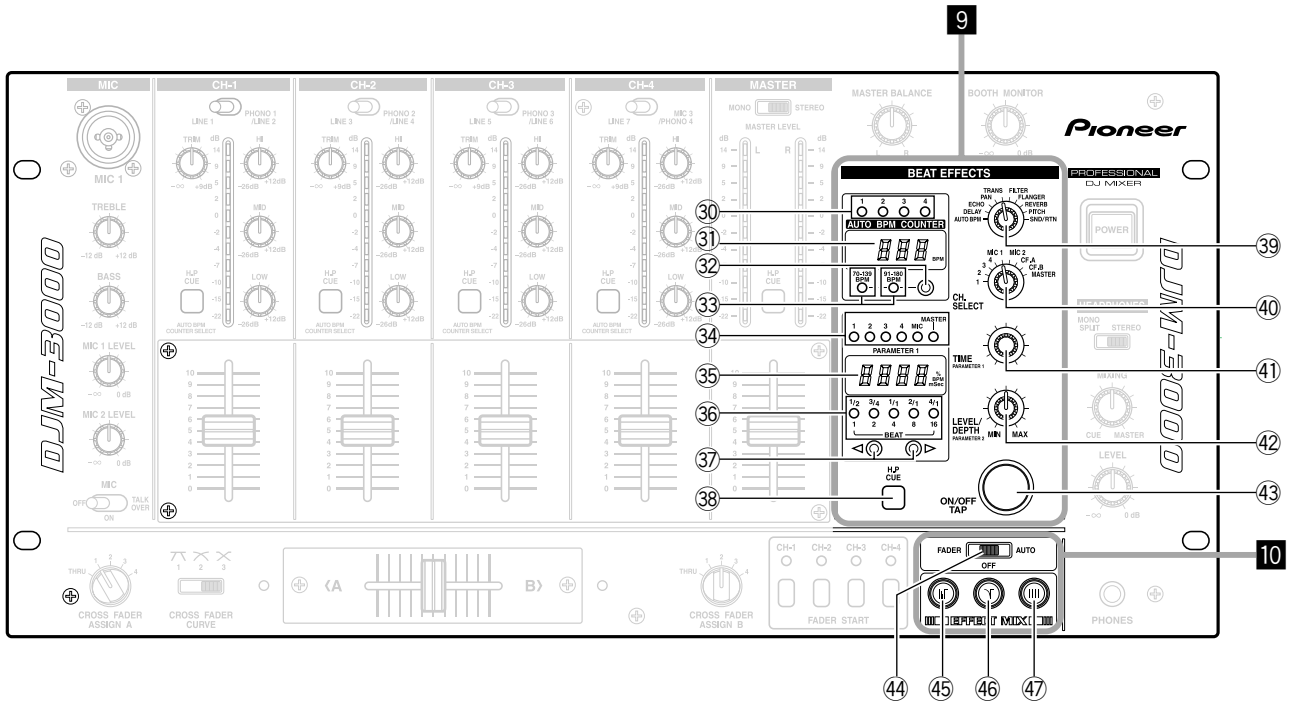

9 BEAT EFFECTS Controls

㉚ 1-4 (Channel displays)
Displays the channel selected for BPM count.

㉛ AUTO BPM COUNTER
When AUTO BPM is selected with the Effect selector switch (㊴), displays the BPM of the channel (CH-1 to CH-4) selected with the H.P CUE switch (⑫). The indicator flashes during counting, or if it is unable to count BPM.

㉜ BPM counter range selector switch
- BPM can be selected in one of the ranges 70-139, 91-180, 70-180 or manual mode. Set the range best matching the track you are measuring.

㉝ BPM counter range displays
- Displays the BPM count range selected. When BPM count range 70-180 is selected, both indicators 70-139 BPM and 91-180 BPM light.
- If both indicators are out, it indicates manual mode. For more information about manual mode, see the item "BPM COUNTING".
  If the Effect selector switch (㊴) is set to DELAY, ECHO, PAN, TRANS, FILTER or FLANGER, the indicator will display the BPM of the source selected with the Effect CH. SELECT switch (㊵).

㉞ 1-4, MIC, MASTER (Source displays)
Displays the source selected with the Effect CH. SELECT switch (㊵).
- If the Effect CH. SELECT switch is used to select "CF.A" or "CF.B", the channel that lights will be the one (1-4) selected with the respective ASSIGN switch (㉔), (㉙).

㉟ PARAMETER 1 (Parameter 1 / BPM counter)
The display contents change in accordance with the setting of the Effect selector switch (㊴).
- When AUTO BPM is selected, the display shows the BPM of the source selected with the Effect CH. SELECT switch (㊵). The indicator flashes during BPM counting, or when it is unable to count BPM.
- When SND/RTN is selected, nothing is displayed.
- When a setting other than AUTO BPM or SND/RTN is selected, the display shows the value of the effect set with Effect PARAMETER 1 control (㊶).

㊱ BEAT (Effect synchronous displays / Beat displays)
This display's contents differ depending on the setting of the Effect selector switch (㊴).
- When DELAY, ECHO, PAN, or TRANS are selected, the display shows the equivalent parameter 1 value for the BPM of the selected source. The display lights when the beat is in the range 1/2 to 4/1. If the beat value is below 1/2, pressing the Effect beat selector switch (◁) causes the value to become 1/4, and all display indicators go out. If the beat value is above 4/1, pressing the Effect beat selector switch (▷) causes the value to become 8/1, and all display indicators go out.
  If the value does not match the number of beats, the indicator for the nearest beat value will flash.
- When FILTER or FLANGER are selected, the display shows the equivalent parameter 1 value for the BPM of the selected source. The display lights when the beat is in the range 1 to 16. If the beat value is below 1, pressing the Effect beat selector switch (◁) causes the value to become 1/2, and all display indicators go out. If the value is above 16, pressing the Effect beat selector switch (▷) causes the value to become 32, and all display indicators go out.
  If the value does not match the number of beats, the indicator for the nearest beat value will flash.
- When REVERB is selected, the display shows the amount of reverberation applied.
- When PITCH is selected, the display shows the amount of pitch modification applied.
- No display appears when AUTO BPM or SND/RTN are selected.

㊲ Effect beat selector switches (◁, ▷)
Use this switch to change the value of Effect PARAMETER 1 control (㊶) in accordance with the BPM of the source selected with the Effect CH. SELECT switch (㊵). The setting value of this switch differs depending on the setting of the Effect selector switch (㊴).
- When DELAY, ECHO, PAN, or TRANS are selected, the parameter 1 value for the BPM of the selected source can be set to 1/4 beat, 1/2 beat, 1/1 beat, 2/1 beat, 4/1 beat, or 8/1 beat.
- When DELAY or ECHO are selected, values can be set to 1/4x, 1/2x, 1/1x, 2/1x, 4/1x or 8/1x, within a range such that the parameter 1 value does not exceed 3500 ms.
- When FILTER or FLANGER are selected, the parameter 1 value for the BPM of the selected source can be set to 1/2 beat, 1 beat, 2 beats, 4 beats, 8 beats, 16 beats, or 32 beats.
- When PITCH is selected, the value can be set to –100%, –50%, –33%, 0%, 33%, 50%, or 100%.
- When REVERB is selected, the value can be set to 10%, 20%, 35%, 50%, 65%, 80%, or 90%.
- This control is disabled when AUTO BPM or SND/RTN are selected.

㊳ H.P CUE (Headphones cue switch)
When this switch is pressed it lights orange, and beat effects are output to the headphones. Pressing the switch again disconnects the beat effect to the headphones and turns off the switch lamp.

㊴ Effect selector switch
Use to select desired effects.

㊵ CH. SELECT (Effect channel selector switch)
Use to select the source you wish to apply effects to.

㊶ TIME (PARAMETER 1)
(Effect parameter 1 control)
This control is used to set the time parameter for the onboard effector.

㊷ LEVEL/DEPTH (PARAMETER 2)
(Effect parameter 2 control)
This control is used to set quantitative parameters for the onboard effector.

㊸ ON/OFF, TAP (Effect ON/OFF switch, TAP switch)
This switch produces different operations depending on the setting of the Effect selector switch (㊴)
- When DELAY, ECHO, PAN, TRANS, FILTER, FLANGER, REVERB, PITCH, or SND/RTN are selected, the switch operates to turn the selected effect ON/OFF. OFF: the orange lamp lights; ON: orange lamp flashes.
- When AUTO BPM is selected the switch becomes a “TAP” switch; by tapping the switch together with the source beat, the BPM can be input manually.
  When tapping the TAP switch to count the BPM, both BPM counter range displays (70-139 BPM and 91-180 BPM) go out, and the manual mode is enabled.

⑩ EFFECT MIX Controls

㊹ FADER/OFF/AUTO (EFFECT MIX selector switch)
Use to select the cross fader effect mode.
FADER: Selects Effect Mix Fader mode. When this is selected, the Cross fader lever (㉗) can be used to control effects and perform cue start and back cue.
OFF: Normal mode
AUTO: The Effect Mix Auto mode. When this is selected, the Effect select/start switches (㊺, ㊻, ㊼) can be used to control effects, perform cue start and back cue.

㊺, ㊻, ㊼ Effect select/start switches
Use to select the type of Effect Mix desired (default is ECHO)
- The switch for the selected function flashes.

㊺ ECHO switch
㊻ ZIP switch
㊼ ROLL switch