9. EXPLODED VIEWS AND PARTS LIST

NOTES:
- *Parts marked by "NSP" are generally unavailable because they are not in our Master Spare Parts List.*
- *The ⚠ mark found on some component parts indicates the importance of the safety factor of the part. Therefore, when replacing, be sure to use parts of identical designation.*
- *Screws adjacent to ▼ mark on product are used for disassembly.*
- *For the applying amount of lubricants or glue, follow the instructions in this manual. (In the case of no amount instructions, apply as you think it appropriate.)*

9.1 PACKING SECTION

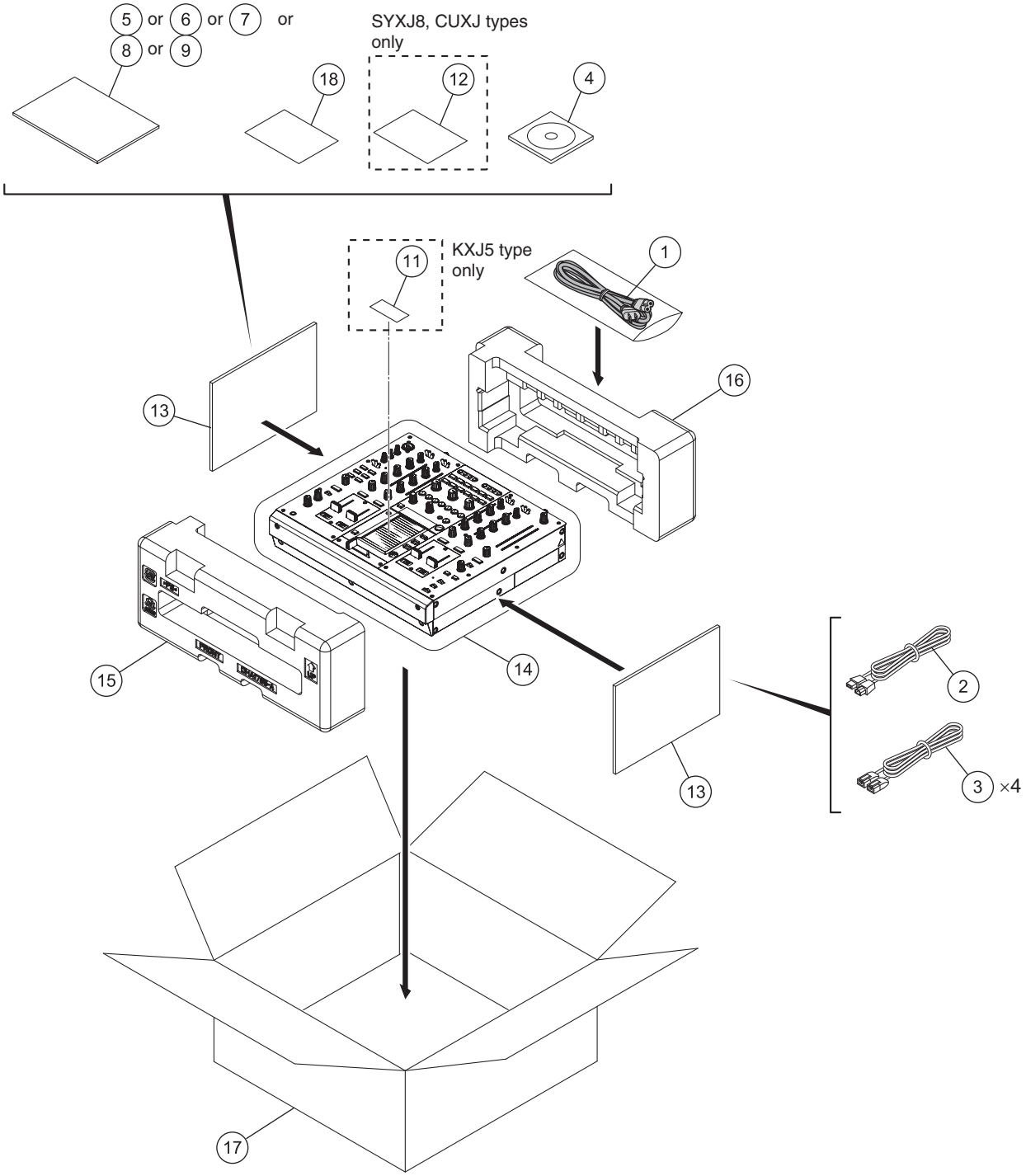

(1) PACKING SECTION PARTS LIST

Mark	No.	Description	Part No.
⚠	1	Power Cable	See Contrast table (2)
	2	USB Cable	DDE1128
	3	LAN Cable	DDE1131 or DDE1137
	4	CD-ROM	DXX2603
	5	Operating Instructions	See Contrast table (2)
	6	Operating Instructions	See Contrast table (2)
	7	Operating Instructions	See Contrast table (2)
	8	Operating Instructions	See Contrast table (2)
	9	Operating Instructions	See Contrast table (2)
	10	•••••	
	11	Recycle Label (M)	See Contrast table (2)
NSP	12	Warranty Card	See Contrast table (2)
NSP	13	Polyethylene Bag	AHG7117
	14	Mirror Mat (1200 x 1000)	DHL1169
	15	Pad F (DJM-2000)	DHA1785
	16	Pad R (DJM-2000)	DHA1786
	17	Packing Case	See Contrast table (2)
NSP	18	Flyer	See Contrast table (2)

(2) CONTRAST TABLE

DJM-2000/SYXJ8, CUXJ, LXJ, KXJ5 and AXJ5 are constructed the same except for the following:

Mark	No.	Symbol and Description	DJM-2000 /SYXJ8	DJM-2000 /CUXJ	DJM-2000 /LXJ	DJM-2000 /KXJ5	DJM-2000 /AXJ5
⚠	1	Power Cable	ADG7062	DDG1028	ADG7062	XDG3066	ADG7105
	5	Operating Instructions (En, Fr, De, It, Nl, Es, Ru)	DRB1497	Not used	Not used	Not used	Not used
	6	Operating Instructions (En, Fr)	Not used	DRB1496	Not used	Not used	Not used
	7	Operating Instructions (En, Es, Zhtw)	Not used	Not used	DRB1498	Not used	Not used
	8	Operating Instructions (Ko)	Not used	Not used	Not used	DRB1500	Not used
	9	Operating Instructions (Zhcn, En)	Not used	Not used	Not used	Not used	DRB1499
	11	Recycle Label (M)	Not used	Not used	Not used	DRW2307	Not used
NSP	12	Warranty Card	ARY7107	ARY7043	Not used	Not used	Not used
	17	Packing Case	DHG2953	DHG2954	DHG2955	DHG2886	DHG2885
NSP	18	Flyer	DRH1108	DRH1109	DRH1109	DRH1107	DRH1107

9.2 EXTERIOR SECTION

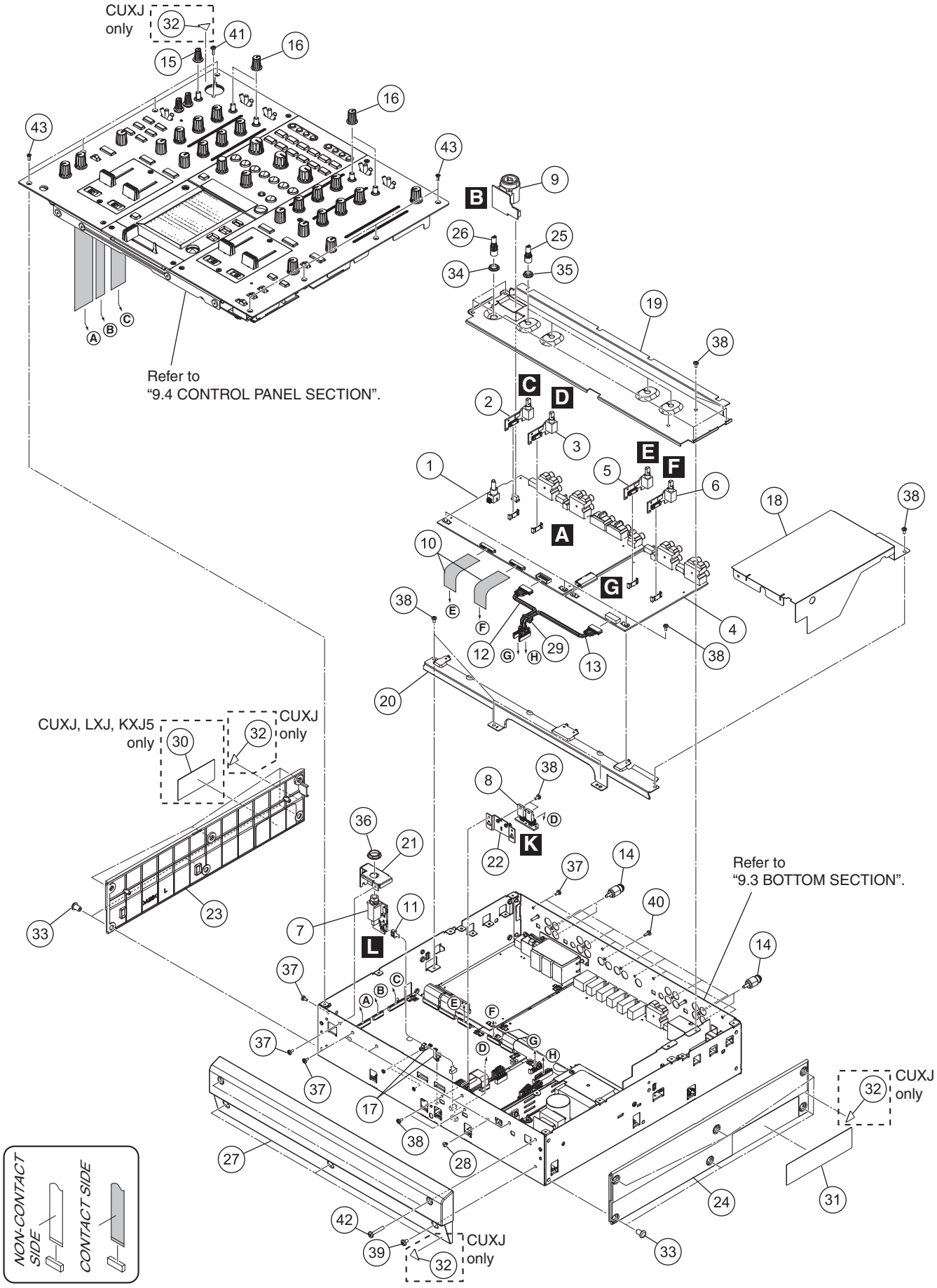

(1) EXTERIOR SECTION PARTS LIST

Mark	No.	Description	Part No.
	1	AIN1 Assy	DWX2922
	2	TRIM1 Assy	DWX2935
	3	TRIM2 Assy	DWX2936
	4	AIN2 Assy	DWX2923
	5	TRIM3 Assy	DWX2937
	6	TRIM4 Assy	DWX2938
	7	HPJK Assy	DWX2939
	8	HREG Assy	DWX2940
	9	MCJK Assy	DWX2934
	10	20P FFC	DDD1510
	11	Connector Assy	PF04PP-D20
	12	Connector Assy	PF07EE-D10
	13	Connector Assy	PF07EE0D12
	14	Short Pin Plug	AKM7008
	15	Rotary SW Knob S (B)	DAA1178
	16	Rotary SW Knob S (C)	DAA1204
	17	Locking Mini Clamp	DEC2439
	18	Barrier (W)	DEC3271
	19	TRIM Stay	DNF1813
	20	Input Stay	DNF1819
	21	HP Stay	DNF1820
	22	Heat Sink	DNF1850
	23	Side Panel L	DNK5363
	24	Side Panel R	DNK5364
	25	Extension Shaft A	DNK5365
	26	Extension Shaft B	DNK5366
	27	Front Panel	DNK5371
	28	Push Rivet	XEC3034
	29	Binder	ZCA-SKB90BK
NSP	30	Caution Label	See Contrast table (2)
NSP	31	Name Label	See Contrast table (2)
NSP	32	Caution Label	See Contrast table (2)
	33	Rivet (Plastic)	AEC1877
	34	Flange Nut M9	DBN1008
	35	Flange Nut M7	DBN1011
	36	Flange Nut M12	DBN1012
	37	Screw	BBZ30P060FTB
	38	Screw	BBZ30P060FTC
	39	Screw	BCZ40P060FTB
	40	Screw	BPZ30P080FTB
	41	Screw	BPZ30P100FTB
	42	Screw	BSZ40P220FTB
	43	Screw	CCZ30P080FTB

(2) CONTRAST TABLE

DJM-2000/SYXJ8, CUXJ, LXJ, KXJ5 and AXJ5 are constructed the same except for the following:

Mark	No.	Symbol and Description	DJM-2000 /SYXJ8	DJM-2000 /CUXJ	DJM-2000 /LXJ	DJM-2000 /KXJ5	DJM-2000 /AXJ5
NSP	30	Caution Label	Not used	DRW2429	DRW2430	DRW2432	Not used
NSP	31	Name Label	DRW2423	DRW2424	DRW2425	DRW2428	DRW2427
NSP	32	Caution Label	Not used	DRW1975	Not used	Not used	Not used

9.3 BOTTOM SECTION

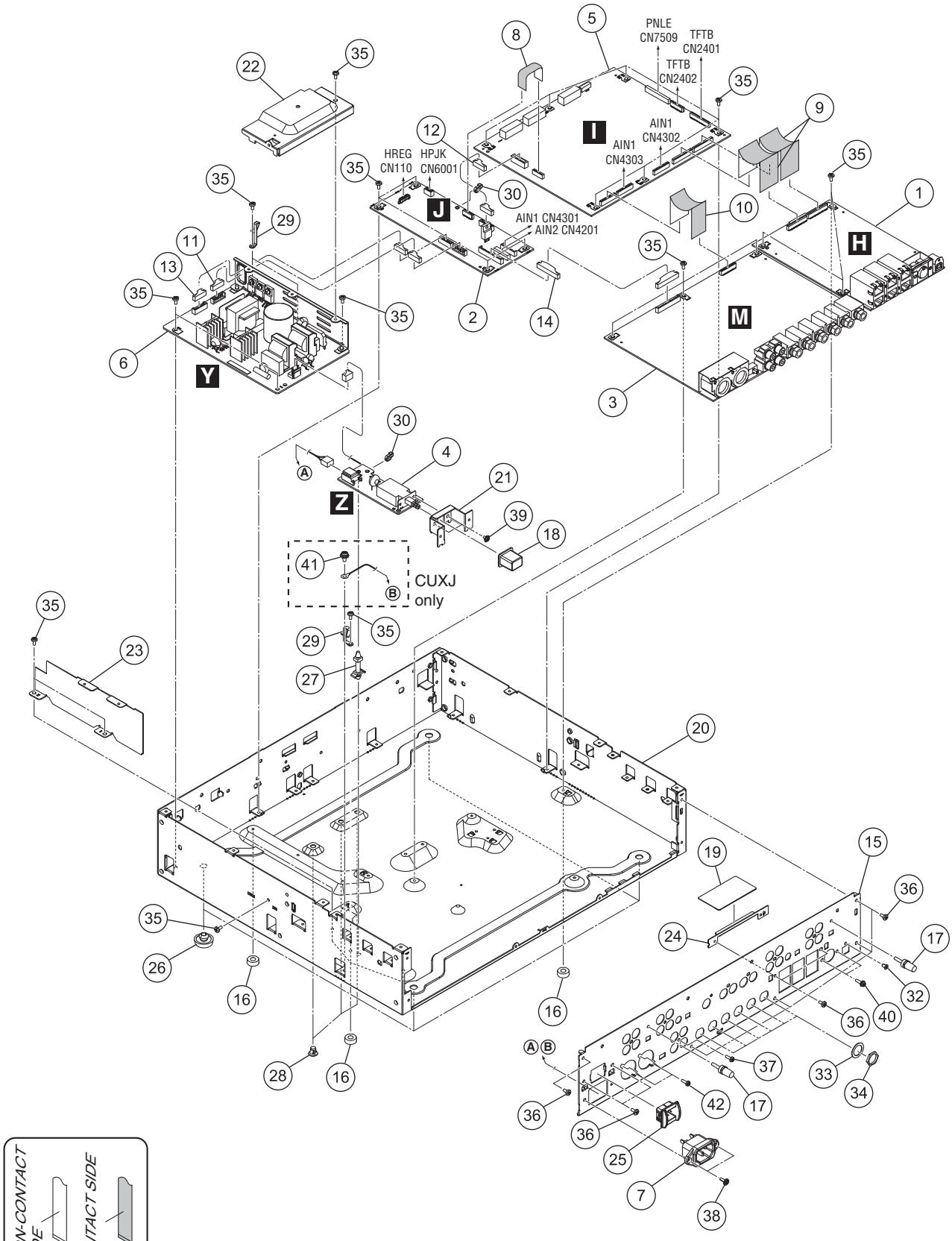

(1) BOTTOM SECTION PARTS LIST

Mark	No.	Description	Part No.
	1	PCIF Assy	DWX2925
	2	HAMP Assy	DWX2919
	3	AOUT Assy	DWX2924
	4	ACSW Assy	DWX2918
	5	MAIN Assy	DWX2920
⚠	6	POWER SUPPLY Assy	DWR1473 or DWR1492
⚠	7	AC Inlet Assy	See Contrast table (2)
	8	12P FFC	DDD1507
	9	26P FFC	DDD1509
	10	20P FFC	DDD1510
	11	Connector Assy	PF06EE-D20
	12	Connector Assy	PF08PP-D10
	13	Connector Assy	PF08PP-D20
	14	Connector Assy	PF12EE-D10
	15	Rear Panel	See Contrast table (2)
NSP	16	Spacer	AEB7092
	17	Terminal Screw	AKE-031
	18	Power Knob	DAC2306
	19	Barrier (LAN)	DEC3169
NSP	20	Chassis	DNA1362
	21	Bracket PSW	DNF1759
	22	Power Shield	DNF1815
	23	AC Shield	DNF1816
	24	Earth Plate	DNF1858
	25	Power Knob Guard	DNK4534
	26	Foot (Rubber)	REC-434
NSP	27	PC Support	VEC1584
NSP	28	PC Support	VEC1749
	29	Cord Clamper (Steel)	RNH-184
	30	Binder	ZCA-SKB90BK
	31	•••••	
	32	Screw (M3 x5)	DBA1340
	33	Washer	DEC2920
	34	Nut (M12)	NKX2FNI
	35	Screw	BBZ30P060FTC
	36	Screw	BBZ30P060FTB
	37	Screw	BPZ30P080FTB
	38	Screw	IBZ30P080FTB
	39	Screw	IMZ30P040FTC
	40	Screw	PMH30P100FTB
	41	Screw	See Contrast table (2)
	42	Screw	PPZ30P080FTB

(2) CONTRAST TABLE

DJM-2000/SYXJ8, CUXJ, LXJ, KXJ5 and AXJ5 are constructed the same except for the following:

Mark	No.	Symbol and Description	DJM-2000 /SYXJ8	DJM-2000 /CUXJ	DJM-2000 /LXJ	DJM-2000 /KXJ5	DJM-2000 /AXJ5
⚠	7	AC Inlet Assy (2P)	DKP3762	Not used	DKP3762	DKP3762	DKP3762
⚠	7	AC Inlet Assy (3P)	Not used	DKP3761	Not used	Not used	Not used
	15	Rear Panel	DNC1916	DNC1917	DNC1918	DNC1921	DNC1920
	41	Screw	Not used	PMH40P080FTC	Not used	Not used	Not used

9.4 CONTROL PANEL SECTION

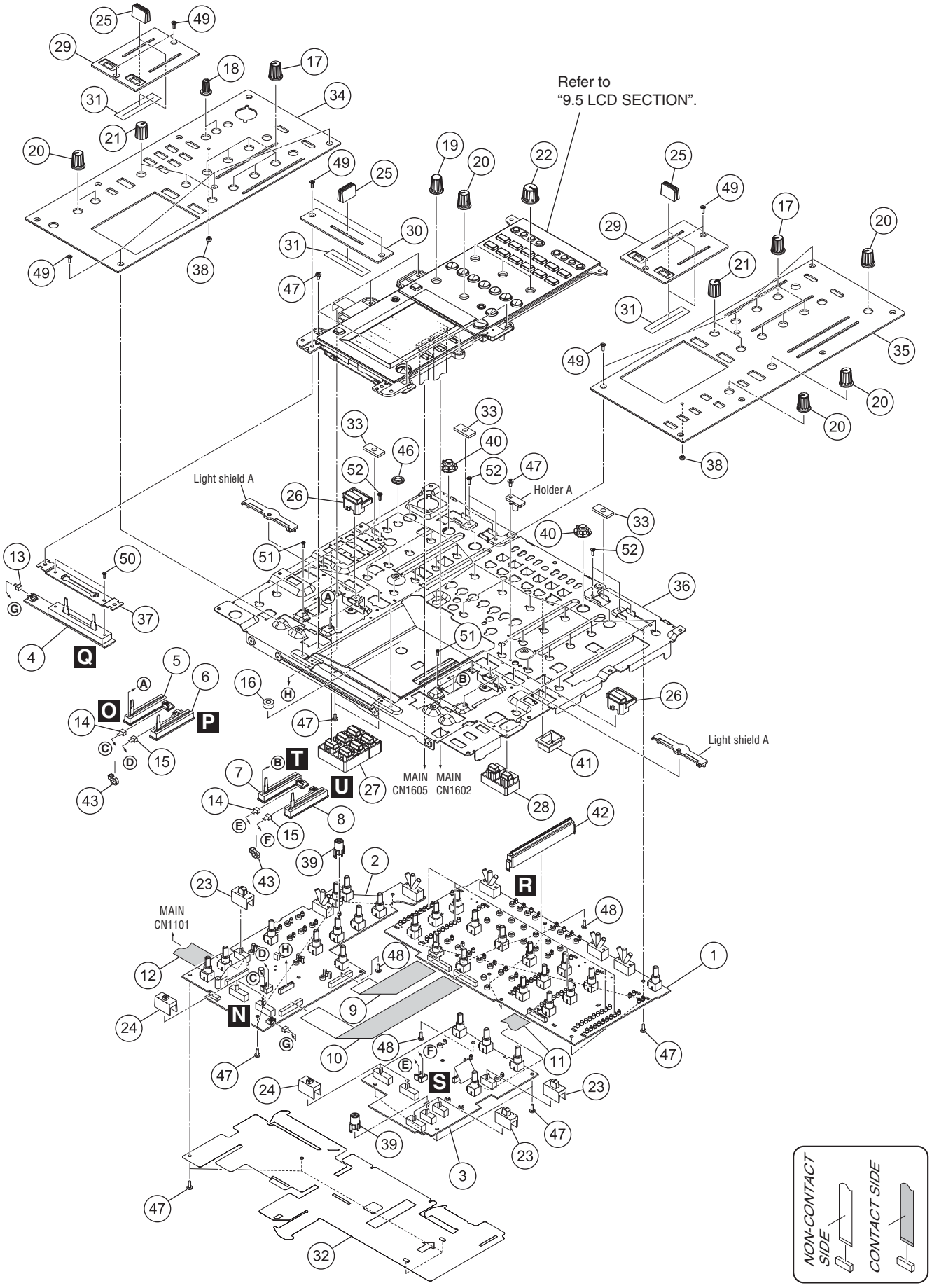

CONTROL PANEL SECTION PARTS LIST

Mark	No.	Description	Part No.
	1	PNCE Assy	DWX2926
	2	PNLE Assy	DWX2927
	3	PNRI Assy	DWX2928
	4	CRFD Assy	DWX2929
	5	CFD1 Assy	DWX2930
	6	CFD2 Assy	DWX2931
	7	CFD3 Assy	DWX2932
	8	CFD4 Assy	DWX2933
	9	32P FFC	DDD1504
	10	32P FFC	DDD1505
	11	25P FFC	DDD1506
	12	32P FFC	DDD1508
	13	Connector Assy	PF03PP-B10
	14	Connector Assy	PF04PP-B05
	15	Connector Assy	PF04PP2B05
NSP	16	Spacer	AEB7092
	17	Rotary SW Knob (B)	DAA1176
	18	Rotary SW Knob S (A)	DAA1177
	19	Rotary SW Knob (C)	DAA1180
	20	Rotary Knob (BN)	DAA1220
	21	Knob (RES)	DAA1250
	22	Knob (FREQUENCY)	DAA1253
	23	Slide SW Cap	DAC2400
	24	Slide SW Cap (W)	DAC2401
	25	Slider Knob	DAC2501
	26	Button (CUE)	DAC2503
	27	Button (CFX)	DAC2510
	28	Button (MIDI)	DAC2511
	29	CHF Panel	DAH2691
	30	CRF Panel	DAH2692
	31	Fader Packing	DEC2903
	32	Barrier (Panel)	DEC3171
	33	SW Packing	DED1177
	34	Control Panel L	DNB1168
	35	Control Panel R	DNB1169
	36	Panel Stay	DNF1812
	37	CRF Stay	DNF1855
	38	Lens	DNK4532
	39	Lens Holder	DNK4533
	40	Bush	DNK5367
	41	Light Shield	DNK5583
	42	Level Meter Assy	DXB1882
	43	Binder	ZCA-SKB90BK
	44	•••••	
	45	•••••	
	46	Flange Nut M9	DBN1008
	47	Screw	BBZ30P060FTC
	48	Screw	BPZ30P080FTB
	49	Screw	CCZ30P080FTB
	50	Screw	IMZ30P040FTC
	51	Screw	PMA20P040FTC
	52	Screw	AMZ26P040FTC

9.5 LCD SECTION

Note:
The shape of the groups of buttons 15, 20, 21, and 22 is the same. To identify the attachment position of each group of buttons during reassembly, the initial letter of the name of the left button of a group is engraved on the back of the Center panel (No. 29).

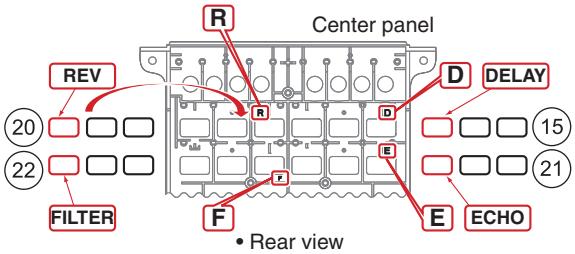

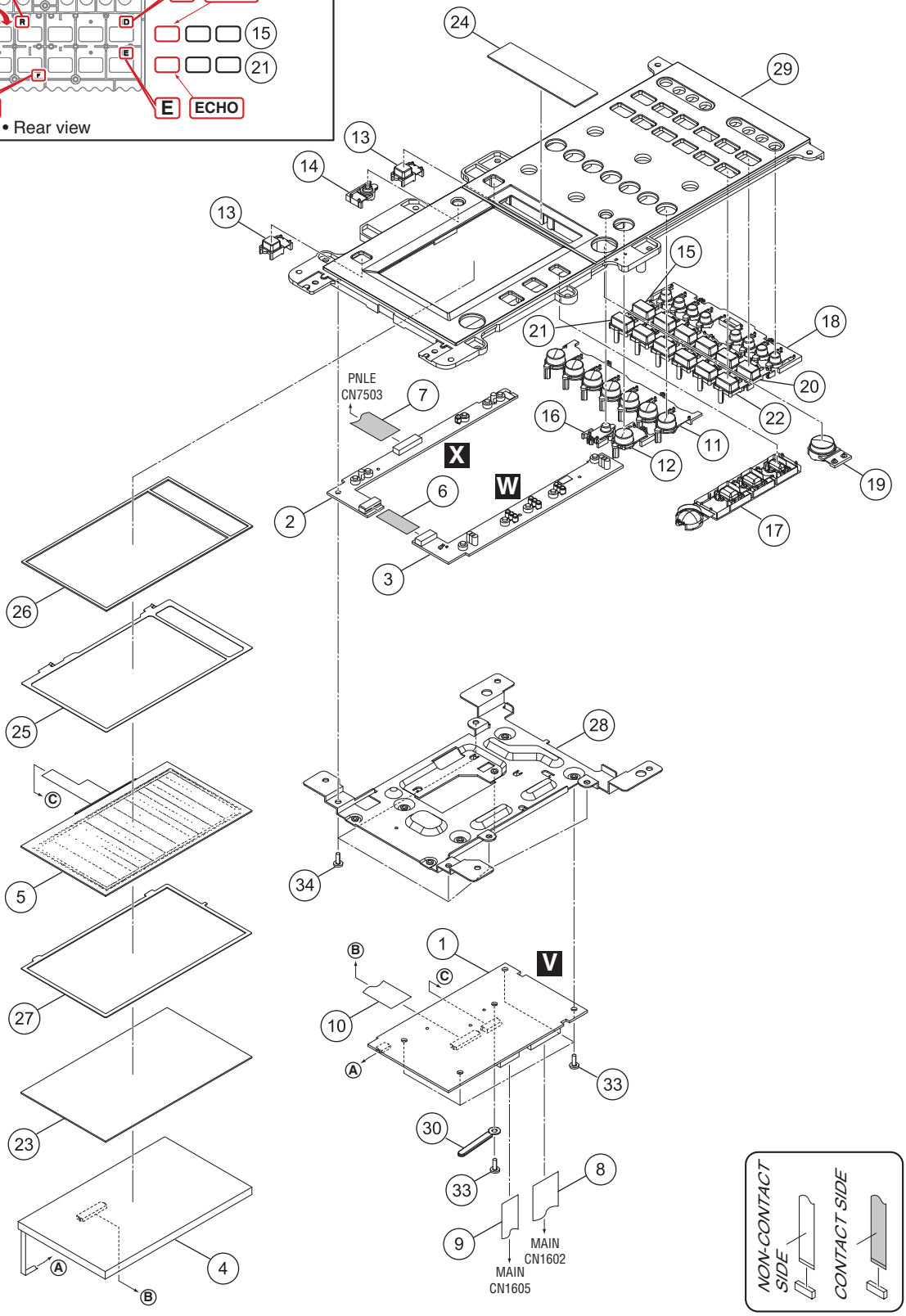

LCD SECTION PARTS LIST

Mark	No.	Description	Part No.
	1	TFTB Assy	DWX2921
	2	TPLE Assy	DWX3010
	3	TPRI Assy	DWX3011
	4	LCD	CWX3868
	5	Touch Panel	DSX1081
	6	12P FFC	DDD1507
	7	19P FFC	DDD1513
	8	26P FFC	DDD1514
	9	16P FFC	DDD1515
	10	40P FFC	DDD1541
	11	Button (BEAT)	DAC2502
	12	Button (TAP)	DAC2504
	13	Button (CUE) S	DAC2505
	14	Button (SETTING)	DAC2506
	15	Button (FX SEL A)	DAC2507
	16	Button (AUTO)	DAC2508
	17	Button (REMIX)	DAC2509
	18	Button (CH SEL)	DAC2512
	19	Button (FX)	DAC2513
	20	Button (FX SEL B)	DAC2597
	21	Button (FX SEL C)	DAC2598
	22	Button (FX SEL D)	DAC2599
	23	Protect Plate	DAH2767
	24	Display Plate (PC)	DAH2768
	25	TFT Earth Spring	DBK1367
	26	Touch Panel Pad	DEC3168
	27	Touch Panel Spacer	DEC3269
	28	LCD Stay	DNF1818
	29	Center Panel	DNK5370
	30	Cord Clamper (Steel)	RNH-184
	31	•••••	
	32	•••••	
	33	Screw	BBZ30P060FTC
	34	Screw	BPZ30P080FTB