9. EXPLODED VIEWS AND PARTS LIST

NOTES:
- *Parts marked by "NSP" are generally unavailable because they are not in our Master Spare Parts List.*
- *The ⚠ mark found on some component parts indicates the importance of the safety factor of the part. Therefore, when replacing, be sure to use parts of identical designation.*
- *Screws adjacent to ▼ mark on product are used for disassembly.*
- *For the applying amount of lubricants or glue, follow the instructions in this manual. (In the case of no amount instructions, apply as you think it appropriate.)*

9.1 PACKING SECTION

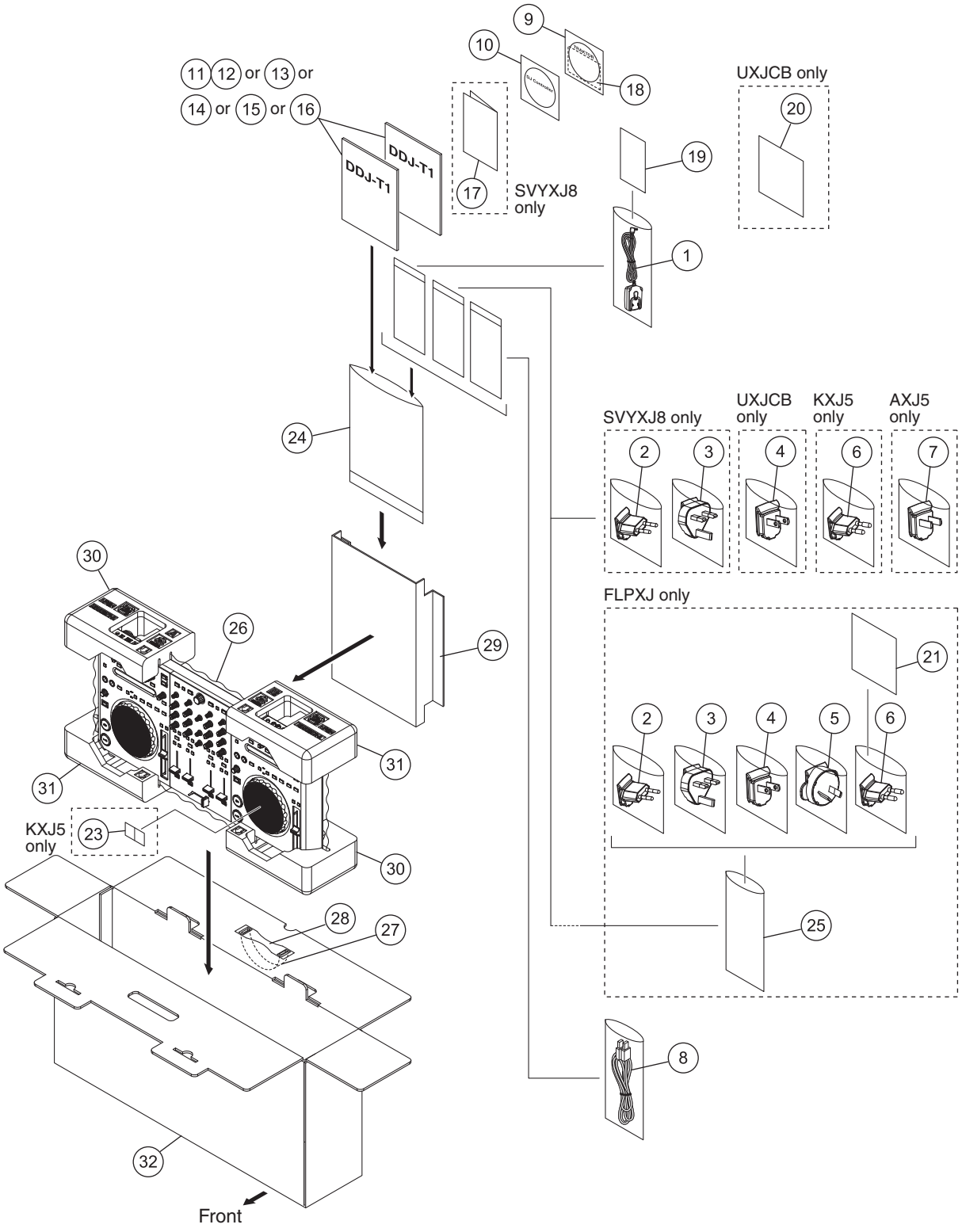

(1) PACKING SECTION PARTS LIST

Mark	No.	Description	Part No.
⚠	1	AC Adapter	DWR1491
⚠	2	Power Plug (EU)	See Contrast table (2)
⚠	3	Power Plug (UK)	See Contrast table (2)
⚠	4	Power Plug (US)	See Contrast table (2)
⚠	5	Power Plug (AUS)	See Contrast table (2)
⚠	6	Power Plug (KOR)	See Contrast table (2)
⚠	7	Power Plug (CHI)	See Contrast table (2)
	8	USB Cable	DDE1140
	9	TRAKTOR Pioneer DDJ-T1 EDITION software CD-ROM	DXX2665
	10	Driver software CD-ROM	DXX2666
	11	Operating Instructions	See Contrast table (2)
	12	Operating Instructions	See Contrast table (2)
	13	Operating Instructions	See Contrast table (2)
	14	Operating Instructions	See Contrast table (2)
	15	Operating Instructions	See Contrast table (2)
	16	Operating Instructions	See Contrast table (2)
NSP	17	Warranty Card	See Contrast table (2)
NSP	18	License Key Label AS	DXA2242
	19	Caution Card/ADP	DRM1345
	20	Caution Card/CU	See Contrast table (2)
	21	Caution Card/PLG	See Contrast table (2)
	22	•••••	
	23	Recycle Label (M)	See Contrast table (2)
NSP	24	Polyethylene Bag	AHG7117
	25	Vinyl Bag	See Contrast table (2)
	26	Packing Sheet	RHC1023
	27	Plastic Handle (PE)	VEC2292
	28	Spacer (PE)	VEC2293
	29	Accessory Pad	DHA1875
	30	Pad A	DHA1871
	31	Pad B	DHA1872
	32	Packing Case	See Contrast table (2)

(2) CONTRAST TABLE

DDJ-T1/SVYXJ8, UXJCB, FLPXJ, KXJ5 and AXJ5 are constructed the same except for the following:

Mark	No.	Symbol and Description	DDJ-T1/SVYXJ8	DDJ-T1/UXJCB	DDJ-T1/FLPXJ	DDJ-T1/KXJ5	DDJ-T1/AXJ5
⚠	2	Power Plug (EU)	DKX1048	Not used	DKX1048	Not used	Not used
⚠	3	Power Plug (UK)	DKX1049	Not used	DKX1049	Not used	Not used
⚠	4	Power Plug (US)	Not used	DKX1047	DKX1047	Not used	Not used
⚠	5	Power Plug (AUS)	Not used	Not used	DKX1050	Not used	Not used
⚠	6	Power Plug (KOR)	Not used	Not used	DKX1051	DKX1051	Not used
⚠	7	Power Plug (CHI)	Not used	Not used	Not used	Not used	DKX1052
	11	Operating Instructions (En/Fr/De)	DRB1537	Not used	Not used	Not used	Not used
	12	Operating Instructions (It/Nl/Es/Ru)	DRB1563	Not used	Not used	Not used	Not used
	13	Operating Instructions (En)	Not used	DRB1536	Not used	Not used	Not used
	14	Operating Instructions (En/Es/Zhtw)	Not used	Not used	DRB1539	Not used	Not used
	15	Operating Instructions (Ko)	Not used	Not used	Not used	DRB1541	Not used
	16	Operating Instructions (Zhcn/En)	Not used	Not used	Not used	Not used	DRB1540
NSP	17	Warranty Card	ARY7107	Not used	Not used	Not used	Not used
	20	Caution Card/CU	Not used	DRM1353	Not used	Not used	Not used
	21	Caution Card/PLG	Not used	Not used	DRM1346	Not used	Not used
	23	Recycle Label (M)	Not used	Not used	Not used	DRW2307	Not used
	25	Vinyl Bag	Not used	Not used	Z21-013	Not used	Not used
	32	Packing Case	DHG3055	DHG3056	DHG3057	DHG2987	DHG2985

9.2 EXTERIOR SECION

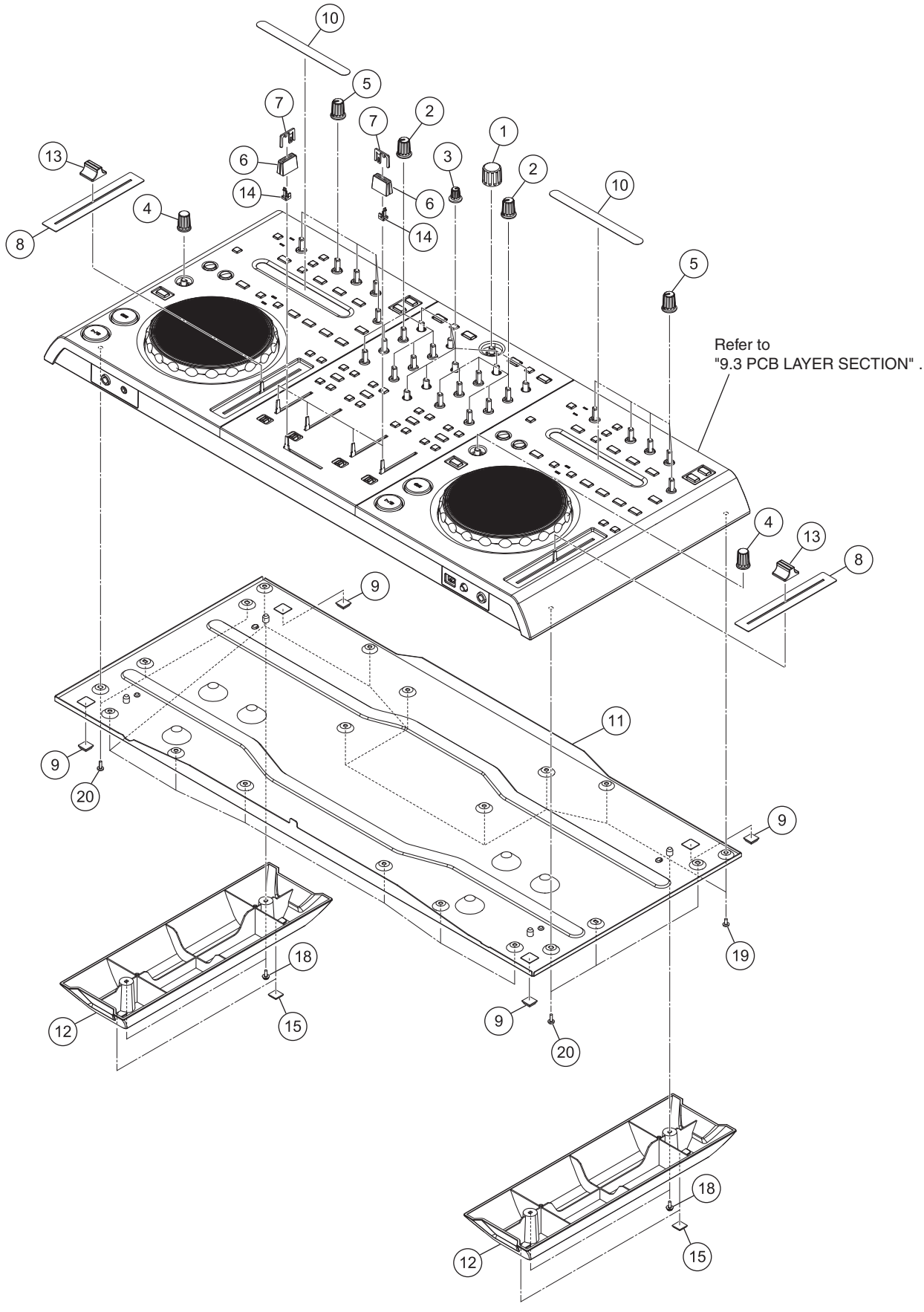

(1) EXTERIOR SECION SECTION PARTS LIST

Mark	No.	Description	Part No.
	1	Dial Knob	DAA1259
	2	Rotary Knob L (Black)	DAA1261
	3	Rotary Knob S (Black)	DAA1262
	4	Dial Knob S	DAA1264
	5	Rotary Knob L (Gray)	DAA1267
	6	Slider Knob 1	DAC2684
	7	Slider Knob 2	DAC2685
	8	Slide Sheet	DAH2836
	9	Rubber Foot (H6)	DEB1996
	10	CDC Sheet	DEC3354
	11	Chassis	See Contrast table (2)
	12	Foot	DNK5864
	13	Slide Knob (Metal)	DNK5876
	14	Slider Knob Stopper	DNK5888
	15	Rubber Foot	VEB1349
	16	•••••	
	17	•••••	
	18	Screw	PMB30P080FTB
	19	Screw	BBZ30P060FTC
	20	Screw	BPZ30P080FNI

(2) CONTRAST TABLE

DDJ-T1/SVYXJ8, UXJCB, FLPXJ, KXJ5 and AXJ5 are constructed the same except for the following:

Mark	No.	Symbol and Description	DDJ-T1/SVYXJ8	DDJ-T1/UXJCB	DDJ-T1/FLPXJ	DDJ-T1/KXJ5	DDJ-T1/AXJ5
	11	Chassis	DNA1419	DNA1414	DNA1415	DNA1416	DNA1416

9.3 PCB LAYER SECION

• Bottom view

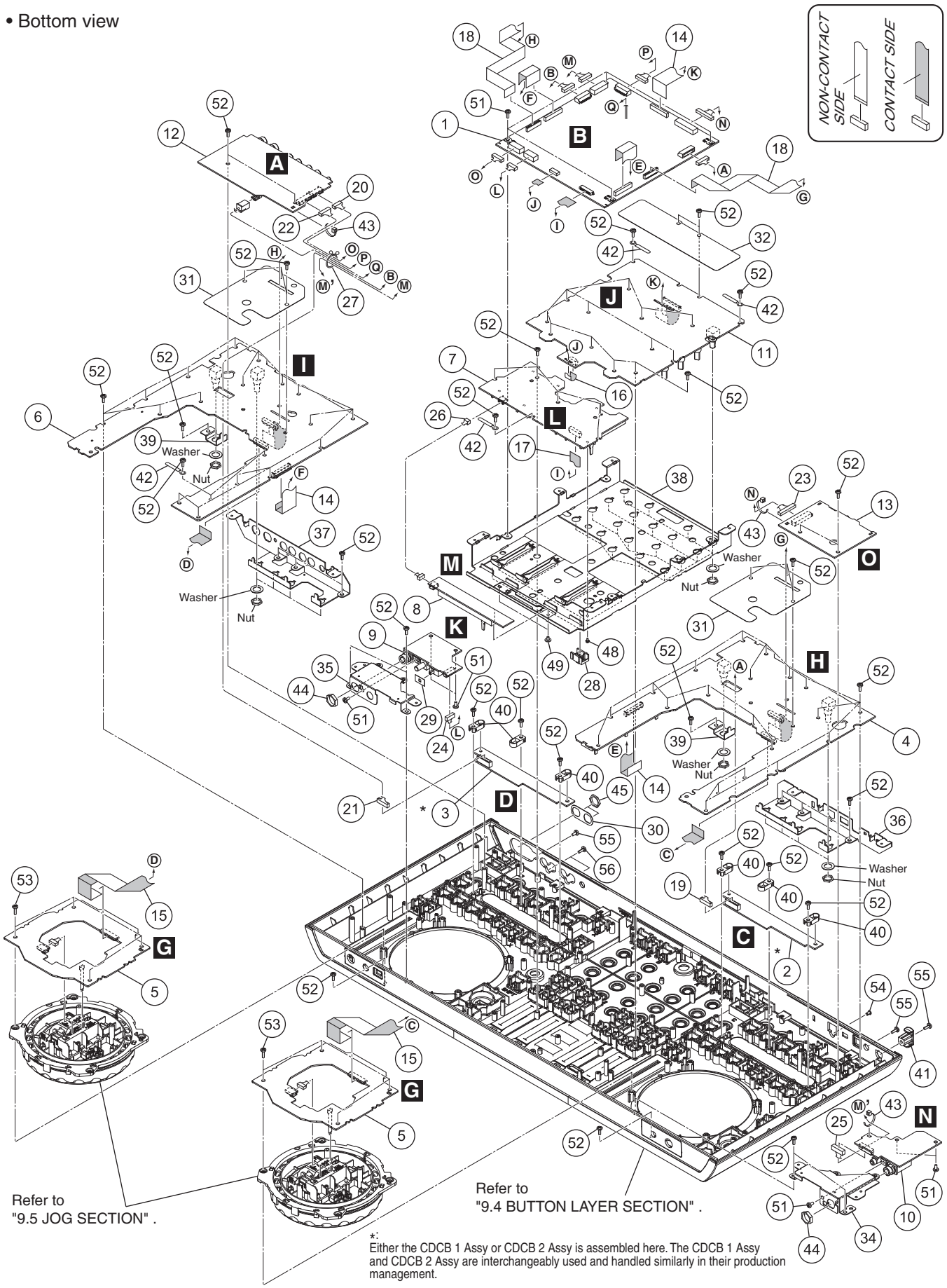

*:
Either the CDCB 1 Assy or CDCB 2 Assy is assembled here. The CDCB 1 Assy and CDCB 2 Assy are interchangeably used and handled similarly in their production management.

PCB LAYER SECTION PARTS LIST

Mark No.	Description	Part No.
1	UCOM Assy	DWX3209
2	CDCB 1 Assy	DWX3210
3	CDCB 2 Assy	DWX3224
4	CDJ1B Assy	DWS1430
5	LEDB Assy	DWS1434
6	CDJ2B Assy	DWS1431
7	CHFD Assy	DWX3212
8	CRFD Assy	DWX3213
9	MICB Assy	DWX3215
10	HPJK Assy	DWX3216
11	DJMB Assy	DWX3211
12	JACB Assy	DWX3214
13	USBB Assy	DWX3222
14	25P FFC	DDD1543
15	19P FFC	DDD1545
16	8P FFC	DDD1547
17	15P FFC	DDD1548
18	FFC/20P	DDD1561
19	Crimp Connector	DKP3894
20	Crimp Connector	DKP3897
21	Crimp Connector	DKP3900
22	Crimp Connector	DKP3920
23	Crimp Connector	DKP3921
24	Crimp Connector	DKP3922
25	Crimp Connector	DKP3923
26	Connector Assy	PF03PP-C06
27	Clamper	CNV3477
28	Cap/FDR	DAC2771
29	Slide SW Packing (B)	DEC2590
30	Phone Spacer	DEC2914
31	FFC Guard 1	DEC3362
32	FFC Guard M	DEC3364
33	•••••	
34	Front Stay L	DNH2959
35	Front Stay R	DNH2960
36	Rear Stay L	DNH2961
37	Rear Stay R	DNH2962
38	VR Stay L	DNH2963
39	VR Stay S	DNH2964
40	CDC Stopper	DNK5863
41	Cord Hook	DNK5928
42	Cord Clamper (Steel)	RNH-184
43	Binder	ZCA-SKB90BK
44	Nut M12	DBN1018
45	Nut	NKX2FTC

Mark No.	Description	Part No.
46	•••••	
47	•••••	
48	Screw	PMH20P040FTC
49	Screw	IMZ30P040FTC
50	•••••	
51	Screw	BBZ30P060FTC
52	Screw	BPZ30P080FNI
53	Screw	BPZ30P100FTB
54	Screw (M3x5)	DBA1340
55	Screw	BBZ30P060FTB
56	Screw	BPZ30P080FTB

9.4 BUTTON LAYER SECION

• Bottom view

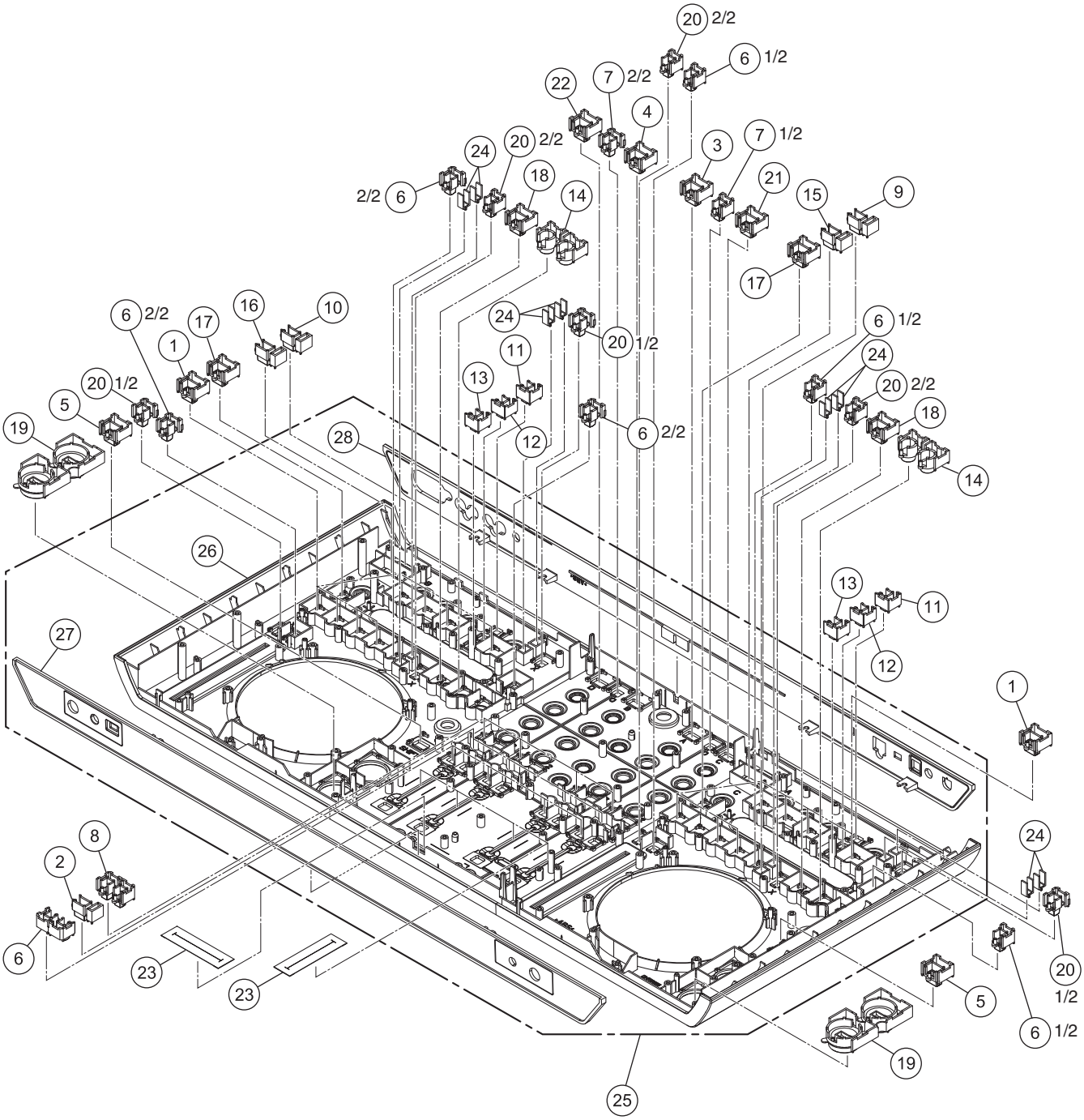

(1) BUTTON LAYER SECTION PARTS LIST

Mark	No.	Description	Part No.
	1	Button L (Opal)	DAC2657
	2	Cue Button R	DAC2658
	3	Load Button A	DAC2659
	4	Load Button B	DAC2660
	5	Shift Button	DAC2661
	6	Button S (Opal)	DAC2662 *
	7	Button S (Black)	DAC2663 *
	8	FX Assign Button	DAC2664
	9	Deck Select Button A	DAC2665
	10	Deck Select Button B	DAC2666
	11	FX Select Button 1	DAC2667
	12	FX Select Button 2	DAC2668
	13	FX Select Button 3	DAC2669
	14	Loop Button	DAC2671
	15	Deck Select Button C	DAC2677
	16	Deck Select Button D	DAC2678
	17	Filter Button	DAC2680
	18	Active Button	DAC2681
	19	Play Button	DAC2682
	20	Button S (Gray)	DAC2683 *
	21	Load Button C	DAC2687
	22	Load Button D	DAC2688
	23	Fader Packing	DEC3355
	24	Lens	DNK5862
	25	1..Control PNL Assy	See Contrast table (2)
	26	2..Control Panel	DNK5859
	27	2..Front Panel	DNK5869
	28	2..Rear Panel	See Contrast table (2)

*: Note that there are two types of button S, as some of them have to be split into two when used.

(2) CONTRAST TABLE

DDJ-T1/SVYXJ8, UXJCB, FLPXJ, KXJ5 and AXJ5 are constructed the same except for the following:

Mark	No.	Symbol and Description	DDJ-T1/SVYXJ8	DDJ-T1/UXJCB	DDJ-T1/FLPXJ	DDJ-T1/KXJ5	DDJ-T1/AXJ5
	25	Control PNL Assy	DXB2096	DXB2106	DXB2107	DXB2110	DXB2108
	28	Rear Panel	DNK5870	DNK5878	DNK5879	DNK5882	DNK5880

9.5 JOG SECTION

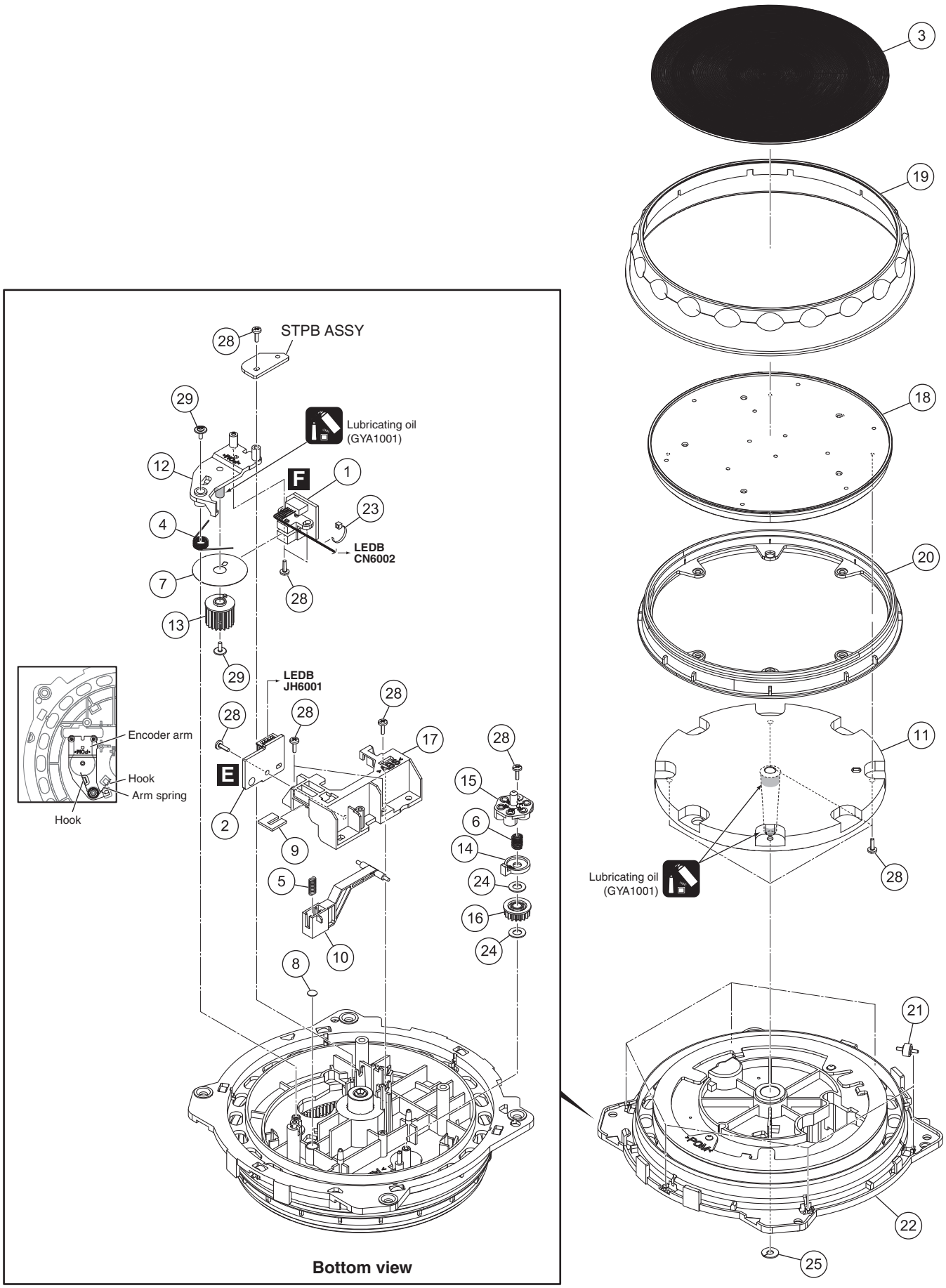

JOG SECTION PARTS LIST

Mark	No.	Description	Part No.
	1	JOGB Assy	DWS1432
	2	TCHB Assy	DWS1433
	3	JOG Plate	DAH2837
	4	Arm Spring	DBH1612
	5	Lever Spring	DBH1626
	6	Load Spring	DBH1676
	7	Encorder Plate	DEC2889
	8	Lever Cushion (A)	DEC3001
	9	Lever Cushion (B)	DEC3002
	10	JOG Lever	DNK4763
	11	JOG Shaft	DNK4934
	12	Encorder Arm	DNK4936
	13	Encorder Gear	DNK4937
	14	Load Smoother	DNK4939
	15	Adjust Plate	DNK4943
	16	Load Gear	DNK5178
	17	Lever Holder	DNK5206
	18	JOG Dial A	DNK5860
	19	JOG Dial B	DNK5861
	20	Ring Lens	DNK5945
	21	Roller B Assy	DXB1877
	22	JOG Holder Assy	DXB2002
	23	Binder	ZCA-SKB90BK
	24	Washer	WA41D070D025
	25	Washer	WT32D080D050
	26	•••••	
	27	•••••	
	28	Screw	BPZ20P060FTC
	29	Screw (FE)	DBA1265