9. EXPLODED VIEWS AND PARTS LIST

NOTES: ● *Parts marked by "NSP" are generally unavailable because they are not in our Master Spare Parts List.*
● *The ⚠ mark found on some component parts indicates the importance of the safety factor of the part. Therefore, when replacing, be sure to use parts of identical designation.*
● *Screws adjacent to ▼ mark on product are used for disassembly.*
● *For the applying amount of lubricants or glue, follow the instructions in this manual. (In the case of no amount instructions, apply as you think it appropriate.)*

9.1 PACKING SECTION

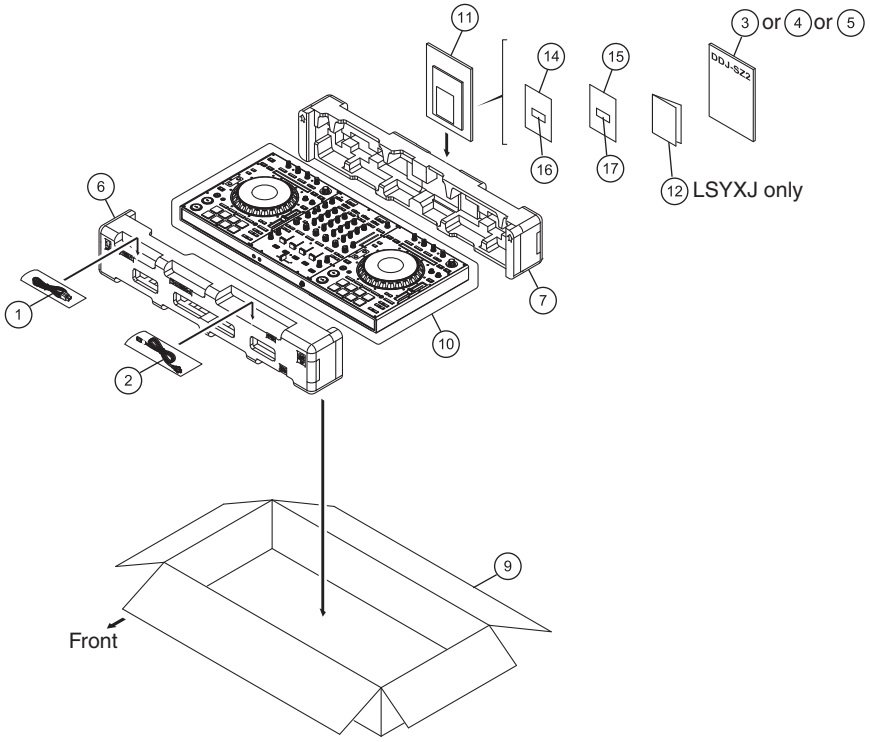

(1) PACKING SECTION PARTS LIST

Mark	No.	Description	Part No.
	1	USB Cable	DDE1128
⚠	2	Power Cord	See Contrast table (2)
	3	Operating Instructions (Quick Start Guide)	See Contrast table (2)
	4	Operating Instructions (Quick Start Guide)	See Contrast table (2)
	5	Operating Instructions (Quick Start Guide)	See Contrast table (2)
	6	Pad/F	DHA1914
	7	Pad/R	DHA1915
	8	•••••	
	9	Packing Case	See Contrast table (2)
	10	Mirror Mat (1200*1000)	DHL1169
NSP	11	Polyethylene Bag	AHG7117
NSP	12	Warranty	See Contrast table (2)
	13	•••••	
NSP	14	Leaflet	DRM1420
NSP	15	Leaflet	DRM1421
NSP	16	Voucher Code Label Assy	DXA2342
NSP	17	Voucher Code Label Assy	DXA2343

(2) CONTRAST TABLE

DDJ-SZ2/LSYXJ, UXJCB and XJCN are constructed the same except for the following:

Mark	No.	Symbol and Desription	DDJ-SZ2/LSYXJ	DDJ-SZ2/UXJCB	DDJ-SZ2/XJCN
⚠	2	Power Cord	ADG1244	DDG1108	DDG1114
	3	Operating Instructions (Quick Start Guide) (En, Fr, De, It, Nl, Es, Pt, Ru)	DRH1410	Not used	Not used
	4	Operating Instructions (Quick Start Guide)(En)	Not used	DRH1411	Not used
	5	Operating Instructions (Quick Start Guide)(Zhcn)	Not used	Not used	DRH1413
	9	Packing Case	DHG3528	DHG3529	DHG3531
NSP	12	Warranty	DRY1270	Not used	Not used

9.2 TOP and CHASSIS SECTION

DDJ-SZ and DDJ-SZ2 are constructed the same except for the following:
For convenience of the system, the part names for the DDJ-SZ2 are simplified. The part names in parentheses are those for theDDJ-SZ.

Mark	No.	Symbol and Desription	DDJ-SZ	DDJ-SZ2	Remarks
⚠	1	POWER SUPPLY Assy	DWR1463	Not used	
⚠	1	SW POWER SUPPLY	Not used	DWR1566	
⚠	2	AC Inlet/3P	DKP3954	DKP3985	
	4	Rotary SW Knob (C)	DAA1180	DAA1344	
	7	Knob (Rotary Knob (BN))	DAA1220	DAA1368	
	8	Knob (Dial Knob)	DAA1259	DAA1371	
	12	Knob/SLD (Slider Knob 1)	DAC2684	DAC2935	
	14	Plate (Plate/MIX)	DAH2976	DAH3138	
	15	Plate (Plate/DEL)	DAH2982	DAH3139	
	16	Plate (Plate/DER)	DAH2983	DAH3140	
	30	Knob (Knob/SLD)	DNK5981	DNK6682	
	31	Chassis	DNK6286	DNK6475	
	32	Shaft/EXT	DNK6305	DNK6410	
	38	DS Tape/ALR	DEH1050	DEH1079	
		Escutcheon	Not used	DNK6473	No. 49
		DS Tape	Not used	DEH1064	No. 50

TOP and CHASSIS SECTION

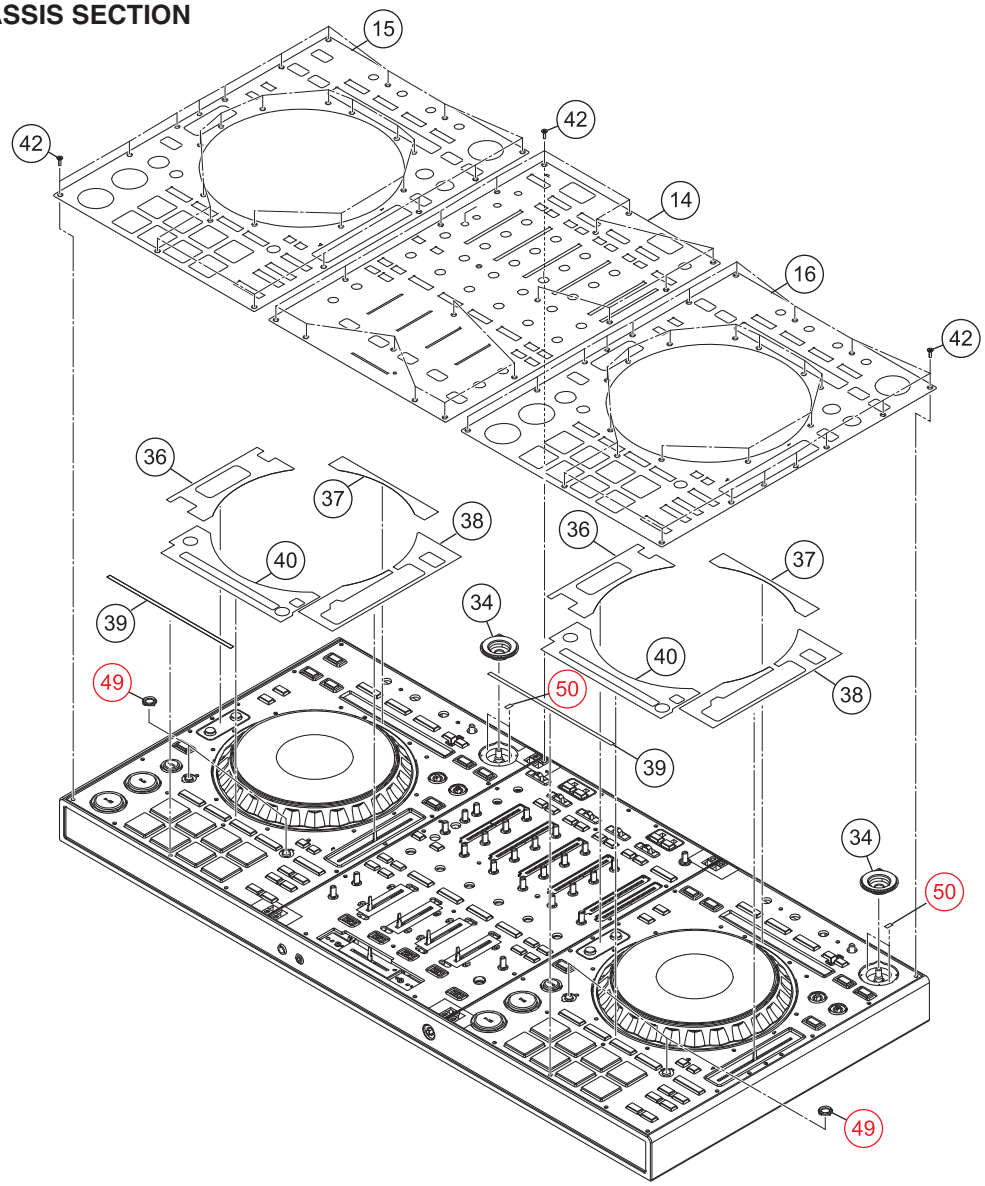

9.3 TERMINAL SECTION

DDJ-SZ and DDJ-SZ2 are constructed the same except for the following:
For convenience of the system, the part names for the DDJ-SZ2 are simplified. The part names in parentheses are those for theDDJ-SZ.

Mark	No.	Symbol and Desription	DDJ-SZ	DDJ-SZ2	Remarks
	1	MAIN Assy	DWX3535	DWX3953	
	2	USBB Assy	DWX3555	DWX3752	
	3	AIJK Assy	DWX3536	DWX3768	
	4	AOJK Assy	DWX3537	DWX3769	
	5	HPJK Assy	DWX3538	DWX3770	
	6	CRFCV Assy	DWX3547	DWX3777	
	7	PSWB Assy	DWX3560	DWX3956	
	8	STRB Assy	DWX3585	DWX3962	

9.4 CONTROL PANEL SECTION

DDJ-SZ and DDJ-SZ2 are constructed the same except for the following:
For convenience of the system, the part names for the DDJ-SZ2 are simplified. The part names in parentheses are those for theDDJ-SZ.

Mark	No.	Symbol and Desription	DDJ-SZ	DDJ-SZ2	Remarks
	1	DEUP Assy	DWX3548	DWX3961	
	2	KSWB Assy	DWX3549	DWX3958	
	3	SLDB Assy	DWX3550	DWX3959	
	4	DEUPR Assy	DWX3580	DWX3963	
	27	Sensor	DSX1124	DSX1135	
		SEQL Assy	Not used	DWX3763	No. 34
		QUAL Assy	Not used	DWX3764	No. 35
		QUAR Assy	Not used	DWX3765	No. 36
		SEQR Assy	Not used	DWX3766	No. 37
		Connector Assy	Not used	PF04PP-B17	No. 38
		Connector Assy	Not used	PF07PP-B17	No. 39
		Crimp Connector	Not used	PF08PP-B12	No. 40
		Crimp Connector	Not used	PF08PP-B17	No. 41
		Barrier	Not used	DEC3630	No. 42
		Stopper	Not used	DNK6532	No. 43
		Cable Tie	Not used	ZCA-SKB90BK	No. 44
		Screw	BPZ30P080FNI	BPZ30P100FTB	No. 45

CONTROL PANEL SECTION

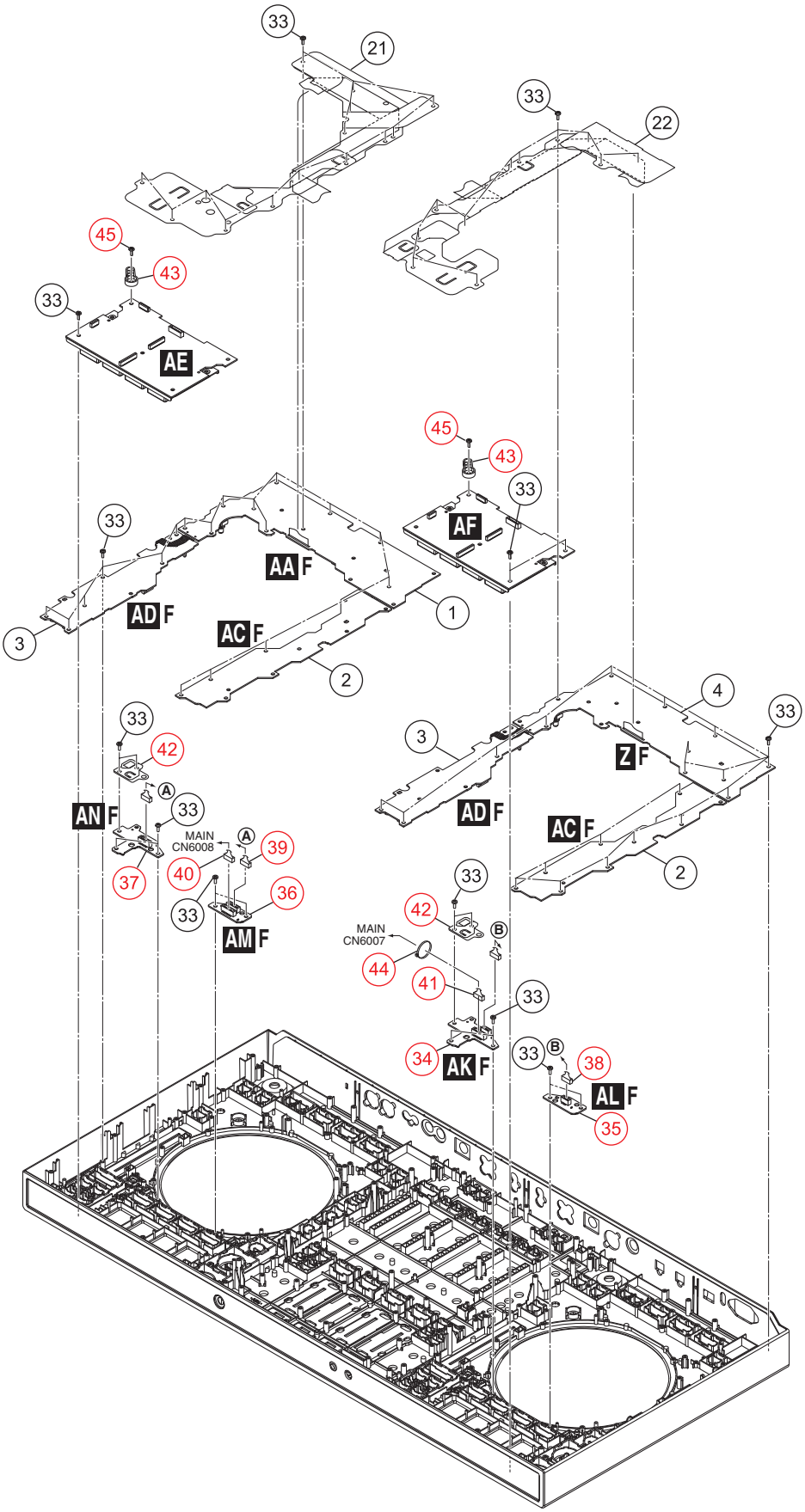

9.5 MIXER SECTION

DDJ-SZ and DDJ-SZ2 are constructed the same except for the following:
For convenience of the system, the part names for the DDJ-SZ2 are simplified. The part names in parentheses are those for theDDJ-SZ.

Mark	No.	Symbol and Desription	DDJ-SZ	DDJ-SZ2	Remarks
	1	MXRA Assy	DWX3543	DWX3954	
	2	MXRB Assy	DWX3544	DWX3964	
	3	FAD1 Assy	DWX3540	DWX3772	
	4	FAD2 Assy	DWX3541	DWX3773	
	5	FAD3 Assy	DWX3539	DWX3771	
	6	FAD4 Assy	DWX3542	DWX3774	
	16	Stay/MIX	DND1280	DND1285	
		Spacer/CHF	Not used	DEC3558	No. 23

MIXER SECTION

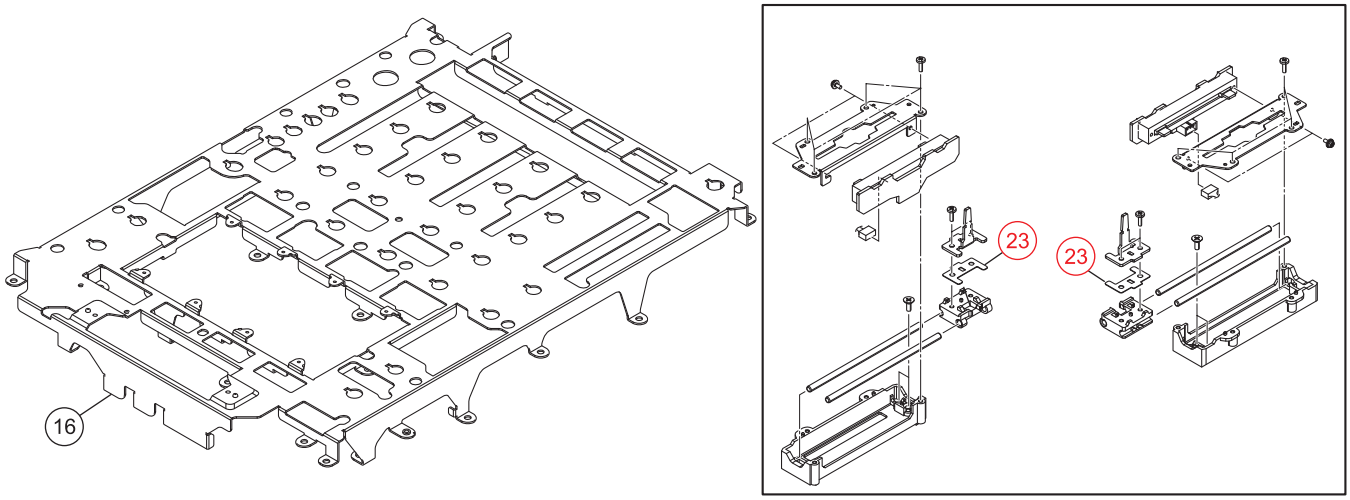

9.6 PANEL and BUTTON SECTION

DDJ-SZ and DDJ-SZ2 are constructed the same except for the following:
For convenience of the system, the part names for the DDJ-SZ2 are simplified. The part names in parentheses are those for theDDJ-SZ.

Mark	No.	Symbol and Desription	DDJ-SZ	DDJ-SZ2/LSYXJ	DDJ-SZ2/UXJCB	DDJ-SZ2/XJCN	Remarks
	1	Control Panel	DNK6285	DNK6681	DNK6681	DNK6681	
	2	Sheet (Sheet/FR)	DAH2991	DAH3141	DAH3141	DAH3141	
	3	Sheet	DAH2992 (UXJCB)	DAH3142	DAH3143	DAH3145	
	9	Button (Button/FX1)	DAC2985	DAC3277	DAC3277	DAC3277	
	10	Button (Button/FX2)	DAC2986	DAC3278	DAC3278	DAC3278	
	11	Button (Button/CEN)	DAC2987	DAC3274	DAC3274	DAC3274	
	12	Button/ANY	DAC2988	Not used	Not used	Not used	
		Button	Not used	DAC3276	DAC3276	DAC3276	No. 26
		Button	Not used	DAC3279	DAC3279	DAC3279	No. 27
		Button	Not used	DAC3280	DAC3280	DAC3280	No. 28
		Button	Not used	DAC3281	DAC3281	DAC3281	No. 29
		Button	Not used	DAC3123	DAC3123	DAC3123	No. 30

PANEL and BUTTON SECTION PARTS

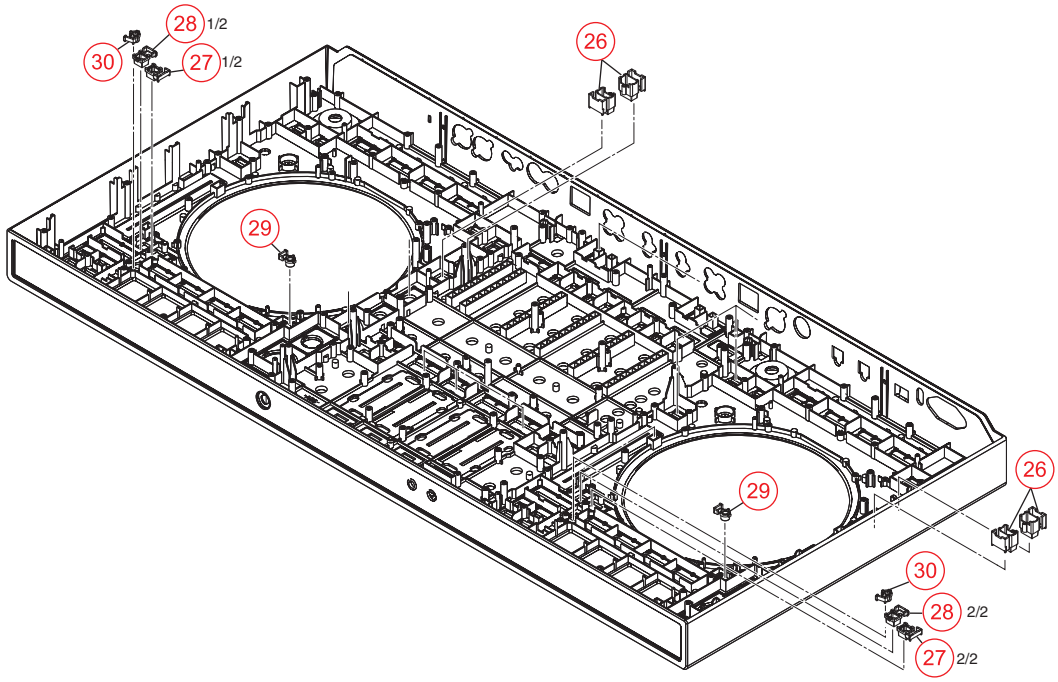

9.7 JOG DIAL SECTION

DDJ-SZ and DDJ-SZ2 are constructed the same except for the following:
For convenience of the system, the part names for the DDJ-SZ2 are simplified. The part names in parentheses are those for theDDJ-SZ.

Mark	No.	Symbol and Desription	DDJ-SZ	DDJ-SZ2	Remarks
	1	JFLL Assy	DWX3545	DWX3775	
	2	JFLR Assy	DWX3546	DWX3776	
	3	JLL1 Assy	DWX3556	DWX3965	
	4	JLL2 Assy	DWX3557	DWX3966	
	5	JLL3 Assy	DWX3558	DWX3967	
	6	JLL4 Assy	DWX3559	DWX3968	
	7	JLR1 Assy	DWX3561	DWX3969	
	8	JLR2 Assy	DWX3562	DWX3970	
	9	JLR3 Assy	DWX3563	DWX3971	
	10	JLR4 Assy	DWX3564	DWX3972	
	11	JOGTL Assy	DWX3551	DWX3955	
	12	JOGTR Assy	DWX3565	DWX3957	
	13	JOGR Assy	DWX3552	DWX3960	

12. PCB PARTS LIST

NOTES:
- *Parts marked by "NSP" are generally unavailable because they are not in our Master Spare Parts List.*
- *The ⚠ mark found on some component parts indicates the importance of the safety factor of the part. Therefore, when replacing, be sure to use parts of identical designation.*
- *When ordering resistors, first convert resistance values into code form as shown in the following examples.*

Ex.1 When there are 2 effective digits (any digit apart from 0), such as 560 ohm and 47 k ohm (tolerance is shown by J = 5%, and K = 10%).

560 Ω	→	*56 × 10¹*	→	*561* ····· *RD1/4PU 5 6 1 J*
47 kΩ	→	*47 × 10³*	→	*473* ····· *RD1/4PU 4 7 3 J*
0.5 Ω	→	*R50*		····· *RN2H R 5 0 K*
1 Ω	→	*1R0*		····· *RS1P 1 R 0 K*

Ex.2 When there are 3 effective digits (such as in high precision metal film resistors).

5.62 kΩ	→	*562 × 10¹*	→	*5621* ····· *RN1/4PC 5 6 2 1 F*

Mark	No.	Description	Part No.
		LIST OF ASSEMBLIES	
NSP	1	..MOTHER ASSY	DWM2643
	2	..MAIN ASSY	DWX3953
	2	..USBB ASSY	DWX3752
NSP	1	..JACK ASSY	DWM2592
	2	..AIJK ASSY	DWX3768
	2	..AOJK ASSY	DWX3769
	2	..HPJK ASSY	DWX3770
	2	..FAD3 ASSY	DWX3771
	2	..FAD1 ASSY	DWX3772
	2	..FAD2 ASSY	DWX3773
	2	..FAD4 ASSY	DWX3774
NSP	1	..SUB ASSY	DWM2647
	2	..MXRB ASSY	DWX3964
	2	..JFLL ASSY	DWX3775
	2	..JFLR ASSY	DWX3776
	2	..CRFCV ASSY	DWX3777
	2	..JLL1 ASSY	DWX3965
	2	..JLL2 ASSY	DWX3966
	2	..JLL3 ASSY	DWX3967
	2	..JLL4 ASSY	DWX3968
	2	..JLR1 ASSY	DWX3969
	2	..JLR2 ASSY	DWX3970
	2	..JLR3 ASSY	DWX3971
	2	..JLR4 ASSY	DWX3972
NSP	1	..MIXER ASSY	DWM2644
	2	..MXRA ASSY	DWX3954
	2	..JOGTL ASSY	DWX3955
	2	..PSWB ASSY	DWX3956
	2	..JOGTR ASSY	DWX3957
NSP	1	..DECK ASSY	DWM2645
	2	..DEUP ASSY	DWX3961
	2	..KSWB ASSY	DWX3958
	2	..SLDB ASSY	DWX3959
	2	..JOGR ASSY	DWX3960
	2	..STRB ASSY	DWX3962
NSP	1	..DECKR ASSY	DWM2646
	2	..KSWB ASSY	DWX3958
	2	..SLDB ASSY	DWX3959
	2	..JOGR ASSY	DWX3960
	2	..DEUPR ASSY	DWX3963
	2	..STRB ASSY	DWX3962
NSP	1	..PACD ASSY	DWM2523
	2	..PADL ASSY	DWX3553
	2	..CDCL ASSY	DWX3554
	2	..PADR ASSY	DWX3583
	2	..CDCR ASSY	DWX3584
NSP	1	..DECK2 ASSY	DWM2590
	2	..SEQL ASSY	DWX3763
	2	..QUAL ASSY	DWX3764
	2	..QUAR ASSY	DWX3765
	2	..SEQR ASSY	DWX3766
	1	..CROSS FADER ASSY	DXA2257
NSP	2	..CRFD ASSY	DWX3258
⚠	1	..SW POWER SUPPLY	DWR1566

Mark	No.	Description	Part No.
		AF MAIN ASSY	
		SEMICONDUCTORS	
⚠	IC	1201,1406,3405	NJM2831F33
⚠	IC	1202	NJM2392M
⚠	IC	1203,1205	BD9328EFJ
⚠	IC	1204	BD9329EFJ
⚠	IC	1206	NJM2886DL3-33
⚠	IC	1401	NJM78M15DL1A
⚠	IC	1402	NJM79M15DL1A
⚠	IC	1403,1405	BD9851EFV
⚠	IC	1404	NJM7805DL1A
	IC	1601,1602,1801,1802	NJM4580MD
	IC	1603,1604,1803,1804	PCM1803ADB
	IC	2001	AK5358AET
	IC	2201,2601	R5S72670P144FP
	IC	2202	TC7SH04FUS1
	IC	2603,2604,3004	TC7SH08FUS1
	IC	3001	DYW1989*
		*Part number of the initial firmware equipped	
	IC	3002	TC7SHU04FUS1
	IC	3201	D810K013DZKB400
	IC	3202	M12L128168A-5TG2N
	IC	3401-3403	TC74VHC08FK
	IC	3406-3409	TC7SG08FU
	IC	3601	WM8740SEDS
	IC	3602,6003	S-80930CNMC-G80
	IC	3606,3802	AK4387ET

Mark	No.	Description	Part No.
	IC	3801	NJM4580MD
	IC	6001	DYW1990*
	*Part number of the initial firmware equipped		
	Q	1001,1003	LTA024EEB
	Q	1002,1004,1201,1204	LTC024EEB
	Q	1205	2SA1577
	Q	1206,1212,1213,3601	LSCR523UB
	Q	1207	2SC4097
	Q	1208-1210,1214,1216	LSAR523UB
	Q	1211	LTC114YUB
	Q	1215,1217	2SC5712
	Q	1401	RSR020P05
	Q	1402	RTQ045N03
	Q	1403,1404	RSQ030P03
	Q	2602,2603,3603	LTC024EEB
	Q	3602,6004,6009,6010	LSCR523UB
	Q	3604,3605,6025,6034	ISA1602AM1
	Q	3604,3605	LSAR523UB
	Q	3809	RT1N431M
	Q	6024,6033	LTC124EUB
	Q	6026,6031,6032	LSCR523UB
	D	1202	RB160L-40
	D	1203-1205,3601	DA2J101
	D	1401,1406,1407,1409	DB2J41100
	D	1404,1405,1408	RB501VM-40
	D	1410	DB2J41100
	D	2001,2002	DAN217UM

MISCELLANEOUS

	L	1002,1007 CHIP SOLID INDUCTOR	QTL1013
	L	1005,1010 INDUCTOR	CTF1793
	L	1201 CHOKE COIL	CTH1209
	L	1202 COIL	CTH1475
	L	1203 CHOKE COIL	CTH1354
	L	1204 POWER INDUCTOR	ATH7053
	L	1256 CHIP BEEDS FILTER	BTX1042
	L	1401,1402,1405 POWER INDUCTOR	ATH7011
	L	1406 POWER INDUCTOR	ATH7011
	L	2203-2205 CHIP SOLID INDUCTOR	QTL1013
	L	2207,2607,3203 CHIP COIL	LCTAW330J2520
	L	2603-2605 CHIP SOLID INDUCTOR	QTL1013
	L	3201 SMD FERRITE BEADS	CTF1823
	F	3201 EMI FILTER	DTL1106
	KN	3001-3008 WRAPPING TERMINAL	CKF1089
	X	3001 RESONATOR	CSS1760
	X	3401 OSCILLATOR	CWX3849
	X	6001 CRYSTAL RESONATOR	BSS1146
	CN	1001 L-PLUG(10P)	KM200NA10L
	CN	1011,1012,1021 PLUG(15P)	KM200NA15
	CN	1022 PLUG(5P)	KM200NA5
	CN	1031 L-PLUG(9P)	KM200NA9L
	CN	1051,1052 PLUG(8P)	KM200NA8
	CN	1061,1062 CONNECTOR	AKM1282
	CN	1101,1111,1121 25P CONNECTOR	VKN1256
	CN	1102,1112 23P CONNECTOR	VKN1427
	CN	1122 23P CONNECTOR	VKN1254
	CN	1131 27P CONNECTOR	VKN1258
	CN	1141,1142 32P CONNECTOR	VKN1436
	CN	1201 CONNECTOR	B6B-XH-A
NSP	CN	6007,6008 CONNECTOR	AKM1279

Mark	No.	Description	Part No.
	JH	3001,3002 PCB BINDER	AEF7008
⚠	P	1201 PROTECTOR(0.750A)	DEK1121

RESISTORS

	R	1186,1187,2322,2707	RS1/8SQ0R0J
	R	1202,1203	RS1/4SA1R0J
	R	1207	RS1/10SR2702D
	R	1208,1605-1608	RS1/10SR1501D
	R	1211,1448	RS1/10SR103J
	R	1214,1215,1217,1218	DCN1184
	R	1219,1227,1402,1406	RS1/10SR1002D
	R	1220,1455	RS1/10SR3001D
	R	1221,1225,1601-1604	RS1/10SR6801D
	R	1223,1403,1416,1433	RS1/10SR3002D
	R	1224,1401,1410,1430	RS1/10SR1502D
	R	1228	RS1/10SR1801D
	R	1229	RS1/10SR2001D
	R	1235,1289,1413,1414	RS1/4SA0R0J
	R	1247	RS1/16SS6800D
	R	1248	RS1/16SS3301D
	R	1249,1252,1253,1255	RS1/16SS1002D
	R	1250	RS1/16SS7501D
	R	1251	RS1/16SS3902D
	R	1254	RS1/16SS6802D
	R	1261,1290	RS1/10SR8201D
	R	1266,1291	RS1/10SR3301D
	R	1267,1292	RS1/10SR1001D
	R	1268,1293,1441,1445	RS1/10SR100J
	R	1269-1278,1294-1303	RS1/4SA7R5J
	R	1279-1288,1304-1313	RS1/10SR120J
	R	1314	RS1/10SR2701D
	R	1404,1419,1434,1449	RS1/10SR6802D
	R	1405	RS1/10SR1803D
	R	1407,1423,3805,3806	RS1/10SR5101D
	R	1411,1415	RS1/10SR220J
	R	1412,1442	RS1/10SR472J
	R	1417,1447,3014,6043	RS1/10SR105J
	R	1418	RS1/10SR6201D
	R	1420,1431,1440,1451	RS1/10SR1002D
	R	1422	RS1/10SR1503D
	R	1424,3617	RS1/10SR2002D
	R	1425-1427,1454,1456	RS1/4SA0R0J
	R	1435	RS1/10SR5102D
	R	1436,3801,3802	RS1/10SR5601D
	R	1439	RS1/10SR123J
	R	1446	RS1/10SR3002D
	R	1452	RS1/10SR6202D
	R	1609-1612,1809-1812	RS1/10SR1000D
	R	1801-1804	RS1/10SR6801D
	R	1805-1808	RS1/10SR1501D
	R	2292,2678	RS1/16SS5601F
	R	2296,2315,2316,2682	RS1/10SR0R0J
	R	2726,2731,3007,3038	RS1/10SR0R0J
	R	3039,3050-3055,3417	RS1/10SR0R0J
	R	3462-3464,6094,6405	RS1/10SR0R0J
	R	3616	RS1/16SS1002D
	R	3723,3819	RS1/10SR100J
	R	3803,3804,3807,3808	RN1/16SE6802D
	R	3809,3810	RS1/10SR4701D
	Other Resistors		RS1/16SS###J

CAPACITORS

Mark	No.	Description	Part No.
C	1001-1004,1014-1016		CKSRYB104K25
C	1005-1013,1017-1023		CKSSYB104K10
C	1028,1029,1031-1033		CKSSYB104K10
C	1030,1034,1221		CKSRYB104K50
C	1035-1038,1224-1227		CKSSYB104K10
C	1047,1048,1419,1420		CKSSYB102K50
C	1201		CCH1680
C	1202		CFTLA474J50
C	1203,1207,1414,1423		DCH1263
C	1205,1208,1239,3610		CKSSYB103K25
C	1209,1223,1233-1235		CKSSYB104K16
C	1210,1240,1277,1283		CCG1218
C	1213,1477,1480-1482		CEVW101M25
C	1214,1230-1232,1432		CCG1236
C	1215,1229,1409,1410		CKSRYB104K25
C	1216,1220,1236-1238		CCSSCH102J50
C	1217,2240,2639,3004		CCSSCH101J50
C	1218		CCSSCH151J50
C	1222		CEVW331M35
C	1228,1286,1291,1643		CKSSYB103K16
C	1241-1243,1247,1251		CKSSYB104K10
C	1244-1246,1265,1467		CKSSYB104K16
C	1249		CKSSYB223K16
C	1250,6067		CKSSYB473K16
C	1255,1256,1260,1264		CKSSYB104K10
C	1259,1261,1262,1287		CCSSCH102J50
C	1263,1266,1267,1270		CCG1192
C	1269,1272,1273,3426		CCH1565
C	1274		CKSRYB334K10
C	1278,1288,1293,1474		CKSRYB105K10
C	1284,1289,1468		CCG1218
C	1285,1290,1460,1617		CKSSYB104K10
C	1292,1437,1440,1476		CCSSCH102J50
C	1401,1611-1614,1640		CKSRYB103K25
C	1403,1444		CKSRYB334K25
C	1404		CKSYB225K25
C	1405,1433		CCSSCH271J50
C	1407		CKSSYB332K50
C	1411,1412,1435,1439		CKSQYB105K25
C	1416,1417		CKSRYB103K50
C	1418		CCSSCH221J50
C	1421,1425,1426,1442		CKSRYB105K16
C	1424,1459		CKSYB105K16
C	1429,1466		CKSSYB682K25
C	1431,1434,1603-1606		CKSRYB104K25
C	1436		CCG1236
C	1438,1441		CEVW470M25
C	1446		CKSSYB472K50
C	1451		CFHXSQ103J16
C	1453,1458		DCH1263
C	1455		CCSSCH561J50
C	1456,1461,1462		CKSRYB105K16
C	1469,1475,2002,2006		CCG1192
C	1472,2211,6025,6036		CKSSYB104K16
C	1478,3242		CKSRYB105K10
C	1479		CCSSCH102J50
C	1483		CCH1961
C	1601,1602,1801,1802		CEVW101M25
C	1607-1610,1807-1810		CEVW101M16
C	1615,1616,1619,1620		CEVW220M6R3
C	1618,1625,1626,1629		CKSSYB104K10
C	1627,1628,1637,1638		CCH1998
C	1630,1635,1636,1817		CKSSYB104K10
C	1631-1634,1831-1834		CKSSYB102K50
C	1639,1641,1645,1647		CCSRCH102J50
C	1642,1646,1648		CKSRYB103K25
C	1644,1843,1844,2011		CKSSYB103K16
C	1803-1806,3810,3811		CKSRYB104K25
C	1811-1814,1840,1842		CKSRYB103K25
C	1815,1816,1819,1820		CEVW220M6R3
C	1818,1825,1826,1829		CKSSYB104K10
C	1827,1828,1837,1838		CCH1998
C	1830,1835,1836,2003		CKSSYB104K10
C	1839,1841,1845,1847		CCSRCH102J50
C	1846,1848,3617,3632		CKSRYB103K25
C	2004,2005		CEVW220M16
C	2007,2009,2201,2202		CKSSYB104K10
C	2008,2247,2257,2258		CCG1192
C	2010,2241,2245,2246		CKSSYB102K50
C	2012,2212-2215		CKSSYB103K16
C	2203,2204,2603,2604		CEVW470M6R3
C	2207,2208,2237,2243		CKSSYB104K10
C	2209,2210,2216-2218		CKSSYB471K50
C	2219-2226,2228,2230		CKSSYB103K16
C	2227,2229,2231,2244		CKSSYB471K50
C	2232-2236,2238,2239		CKSSYB103K16
C	2242,2249,2250		CKSSYB103K16
C	2248,2251,2252,2256		CKSSYB471K50
C	2253-2255,2265-2267		CKSSYB104K10
C	2259-2261,2275,2276		CKSSYB102K50
C	2262-2264,2611-2614		CKSSYB103K16
C	2268-2270,2646,2656		CCG1192
C	2273,2601,2602,2607		CKSSYB104K10
C	2285,2677,3205,3677		CEVW101M16
C	2294,2312,2609,2610		CKSSYB471K50
C	2608,2636,2642		CKSSYB104K10
C	2615-2617,2626,2628		CKSSYB471K50
C	2618-2625,2627,2629		CKSSYB103K16
C	2630,2643,2647,2650		CKSSYB471K50
C	2631-2635,2637,2638		CKSSYB103K16
C	2640,2644,2645		CKSSYB102K50
C	2641,2648,2649		CKSSYB103K16
C	2651,2655,2658,2678		CKSSYB471K50
C	2652-2654,2665-2667		CKSSYB104K10
C	2657,2668-2670,3244		CCG1192
C	2659-2661,2675,2676		CKSSYB102K50
C	2662-2664,3002,3208		CKSSYB103K16
C	2673,2683,2684,3001		CKSSYB104K10
C	3003,3009,3214,3216		CKSSYB102K50
C	3005,3007,3010,3201		CKSSYB104K10
C	3006		CCSSCH100D50
C	3008		CCSSCH8R0D50
C	3012,3013,3016,3018		CKSRYB104K16
C	3014,3015,3017,3019		CKSRYB102K50
C	3202,3204,3207,3401		CKSSYB104K10
C	3203,6017		CEVW470M6R3
C	3206,3209,6001-6016		CKSSYB471K50

Mark	No.	Description	Part No.
	C	3210-3213,3215,3217	CKSSYB103K16
	C	3218,3220,3222,3224	CKSSYB102K50
	C	3219,3221,3223,3225	CKSSYB103K16
	C	3226,3228,3230,3232	CKSSYB102K50
	C	3227,3229,3231,3233	CKSSYB103K16
	C	3234,3236,3238,3403	CKSSYB102K50
	C	3235,3237,3239,3241	CKSSYB103K16
	C	3240,3404-3407	CCSSCH101J50
	C	3245-3251,3402,3415	CKSSYB103K16
	C	3408-3410,3603,3606	CKSSYB102K50
	C	3411-3413,3416-3420	CKSSYB104K10
	C	3422,3602,3605,3609	CKSSYB104K10
	C	3601,3608,3619,3627	CCH1565
	C	3614,3620,6023	CKSSYB102K50
	C	3615,3618,3621,3669	CKSSYB104K10
	C	3616,3631,3633,3671	CCSRCH102J50
	C	3622,3624,3665,3815	CKSSYB103K16
	C	3634,3672,3812,3819	CKSRYB103K25
	C	3667,3816	CEVW220M6R3
	C	3675,3817,3820,6066	CKSSYB104K10
	C	3801,3802,3821,6056	CEVW101M16
	C	3803,3804	CCSRCH272J50
	C	3805,3806	CCSRCH471J50
	C	3807,3808	CCSRCH220J50
	C	3809,3818	CCSRCH102J50
	C	3813,3814	CEVW100M50
	C	6030	CKSSYB103K16
	C	6031,6034	CCSSCH6R0D50
	C	6037,6071,6072	CKSSYB104K16
	C	6038-6041,6062-6065	CKSSYB102K50
	C	6055	CKSRYB104K16
	C	6057	CKSSYB471K50
	C	6068	CKSSYB103K25
	C	6069,6070	CKSSYB102K50

JF MXRA ASSY

SEMICONDUCTORS

	IC	4501-4503	TC74HC4052AFT
	IC	4504	NJM12903V
	Q	4002-4005	LTC123JUB
	Q	4006-4014	LSCR523UB
	Q	4015,4017,4019,4021	LTC124EUB
	Q	4016,4018,4020,4022	2SB1689
	Q	4023,4025,4502-4505	LTC124EUB
	Q	4024,4026	2SB1689
	Q	4501	LTA143EUB
	D	4002,4005,4006,4018	LTL17KRH5D
	D	4003,4004,4010-4014	LTL17KGH5D
	D	4007-4009,4015	LTL17KSL5D
	D	4019,4031,4032,4043	LTL17KRH5D
	D	4020-4022,4028	LTL17KSL5D
	D	4023-4027,4036-4040	LTL17KGH5D
	D	4033-4035,4045-4047	LTL17KSL5D
	D	4044,4055,4056,4068	LTL17KRH5D
	D	4048-4052,4060-4064	LTL17KGH5D
	D	4057-4059,4065	LTL17KSL5D
	D	4066,4067,4073-4077	LTL17KGH5D
	D	4069,4526-4533	LTL17KRH5D
	D	4070-4072,4078-4080	LTL17KSL5D
	D	4081-4084	LTL17KGH5D
	D	4501-4523	DA2J101

MISCELLANEOUS

	VR	4501-4506 ROTARY VR	DCS1126
	VR	4507,4508,4510-4512 ROTARY VR	DCS1104
	VR	4509,4513 POTENTIONETER	DCS1065
	VR	4516-4519 POTENTIONETER	DCS1065
	VR	4520,4528 ROTARY VR	DCS1104
	VR	4521-4527,4529 POTENTIONETER	DCS1065
	S	4501,4504,4513 SLIDE SWITCH	DSH1058
	S	4502,4503,4505,4506 TACT SWITCH	DSG1079
	S	4507,4510 SLIDE SWITCH	DSH1066
	S	4508,4509,4511,4512 TACT SWITCH	DSG1079
	S	4514-4520 TACT SWITCH	DSG1079
	CN	4001 25P CONNECTOR	VKN1256
	CN	4002 23P CONNECTOR	VKN1254
	CN	4501 3P JUMPER CONNECTOR	52147-0310

RESISTORS

	All Resistors		RS1/10SR###J

CAPACITORS

	C	4001,4002	CEJQ101M16
	C	4003,4004,4008	CKSRYB104K16
	C	4006	CEJQ470M6R3
	C	4010-4015,4513-4518	CKSRYB104K16
	C	4519-4530,4538	CKSRYB471K50
	C	4531,4534,4535,4544	CKSRYB104K16
	C	4541-4543,4545-4552	CKSRYB471K50
	C	4553-4560,4562-4564	CKSRYB104K16
	C	4566-4575,4579,4580	CKSRYB104K16

KF MXRB ASSY

SEMICONDUCTORS

	IC	7801	TC74HC4052AFT
	IC	7802	TC4053BFT
	Q	7801,7803,7805,7807	LTC124EUB
	Q	7802,7808,7825-7832	LSAR523UB
	Q	7804,7806,7810,7812	2SA1577
	Q	7809,7811	LTC124EUB
	Q	7813,7814	LSCR523UB
	D	7801,7802,7807,7808	LTL17KCBH5D
	D	7803,7804,7809,7810	LTL17KSL5D
	D	7805,7806,7811,7812	LTL17KRH5D
	D	7813-7842	DA2J101
	D	7843-7846	LTL17KSL5D
	D	7847-7850	LTL17KRH5D

MISCELLANEOUS

	VR	7801,7804 POTENTIONETER	DCS1065
	VR	7802,7803 ROTARY VR	DCS1104
	S	7801,7802,7804,7805 TACT SWITCH	DSG1079
	S	7803,7806,7809 SLIDE SWITCH	DSH1058
	S	7807,7808,7810,7811 TACT SWITCH	DSG1079
	S	7812,7815 SLIDE SWITCH	DSH1058
	S	7813,7814,7816,7817 TACT SWITCH	DSG1079
	CN	7801 27P CONNECTOR	VKN1258
	CN	7802 PLUG(3P)	KM200NA3
	CN	7803 PLUG(3P)	KM200NA3R

Mark	No.	Description	Part No.
	CN 7804	PLUG(3P)	KM200NA3E
	CN 7805	PLUG(3P)	KM200NA3Y
	JH 7801	CRIMP CONNECTOR	PF03PG-R15
	JH 7802,7803	3P CABLE HOLDER	51048-0300
	JP 7802,7803	3P JUMPER WIRE	D20PDY0310E
RESISTORS			
	All Resistors		RS1/10SR###J
CAPACITORS			
	C 7801,7808-7819		CKSRYB104K16
	C 7804-7807		CKSRYB471K50
	C 7821-7823		CEJQ470M6R3

OF JLL1 ASSY

SEMICONDUCTORS		
	Q 9211-9214	LSAR523UB
	D 9211	LTL17KCBH5D
	D 9212	SLR343WBC7T
MISCELLANEOUS		
	CN 9211 L-PLUG(3P)	KM200NA3L
RESISTORS		
	All Resistors	RS1/10SR###J

PF JLL2 ASSY

SEMICONDUCTORS		
	Q 9231-9234	LSAR523UB
	D 9231	LTL17KCBH5D
	D 9232	SLR343WBC7T
MISCELLANEOUS		
	CN 9231,9232 L-PLUG(3P)	KM200NA3L
RESISTORS		
	All Resistors	RS1/10SR###J

QF JLL3 ASSY

SEMICONDUCTORS		
	Q 9251-9254	LSAR523UB
	D 9251	LTL17KCBH5D
	D 9252	SLR343WBC7T
MISCELLANEOUS		
	CN 9251,9252 L-PLUG(3P)	KM200NA3L
RESISTORS		
	All Resistors	RS1/10SR###J

RF JLL4 ASSY

SEMICONDUCTORS		
	Q 9271-9274	LSAR523UB
	D 9271	LTL17KCBH5D
	D 9272	SLR343WBC7T
MISCELLANEOUS		
	CN 9271 L-PLUG(3P)	KM200NA3L
RESISTORS		
	All Resistors	RS1/10SR###J

SF JLR1 ASSY

SEMICONDUCTORS		
	Q 9311-9314	LSAR523UB
	D 9311	LTL17KCBH5D
	D 9312	SLR343WBC7T
MISCELLANEOUS		
	CN 9311 L-PLUG(3P)	KM200NA3L
RESISTORS		
	All Resistors	RS1/10SR###J

TF JLR2 ASSY

SEMICONDUCTORS		
	Q 9331-9334	LSAR523UB
	D 9331	LTL17KCBH5D
	D 9332	SLR343WBC7T
MISCELLANEOUS		
	CN 9331,9332 L-PLUG(3P)	KM200NA3L
RESISTORS		
	All Resistors	RS1/10SR###J

UF JLR3 ASSY

SEMICONDUCTORS		
	Q 9351-9354	LSAR523UB
	D 9351	LTL17KCBH5D
	D 9352	SLR343WBC7T
MISCELLANEOUS		
	CN 9351,9352 L-PLUG(3P)	KM200NA3L
RESISTORS		
	All Resistors	RS1/10SR###J

VF JLR4 ASSY

SEMICONDUCTORS		
	Q 9371-9374	LSAR523UB
	D 9371	LTL17KCBH5D
	D 9372	SLR343WBC7T
MISCELLANEOUS		
	CN 9371 L-PLUG(3P)	KM200NA3L
RESISTORS		
	All Resistors	RS1/10SR###J

WF JOGTL ASSY

SEMICONDUCTORS

Mark	No.	Description	Part No.
	IC	8601	DYW1858
	D	8601	RB501VM-40
MISCELLANEOUS			
	L	8601-8603 INDUCTOR	CTF1379
	KN	8601-8603 EARTH TERMINAL	AKF7002
	CN	8601 PLUG(8P)	KM200NA8
	CN	8602 L-PLUG(4P)	KM200NA4L
	CN	8603,8604 L-PLUG(3P)	KM200NA3L
	VA	8601,8602 SMD VARISTOR	EZJZ1V80010
RESISTORS			
	R	8601,8602	DCN1187
	R	8603	RS1/10SR4701D
		Other Resistors	RS1/10SR###J
CAPACITORS			
	C	8601	CCSRCH101J50
	C	8602	CKSRYB104K16
	C	8603	DCH1201

XF JOGTR ASSY

SEMICONDUCTORS			
	IC	8701	DYW1858
	D	8701	RB501VM-40
MISCELLANEOUS			
	L	8701-8703 INDUCTOR	CTF1379
	KN	8701-8703 EARTH TERMINAL	AKF7002
	CN	8701 PLUG(8P)	KM200NA8
	CN	8702 L-PLUG(4P)	KM200NA4L
	CN	8703,8704 L-PLUG(3P)	KM200NA3L
	VA	8701,8702 SMD VARISTOR	EZJZ1V80010
RESISTORS			
	R	8701,8702	DCN1187
	R	8703	RS1/10SR4701D
		Other Resistors	RS1/10SR###J
CAPACITORS			
	C	8701	CCSRCH101J50
	C	8702	CKSRYB104K16
	C	8703	DCH1201

YF JOGR ASSY

MISCELLANEOUS			
	CN	8801 PLUG(4P)	KM200NA4
RESISTORS			
		All Resistors	RS1/10SR###J
MISCELLANEOUS			
	PC	8801 PHOTO INTERRUPTER	KE-2K18-15
CAPACITORS			
	C	8801	CKSRYB105K10
	C	8802,8803	CKSRYB103K50

ZF DEUP ASSY

Mark	No.	Description	Part No.
SEMICONDUCTORS			
	IC	6004	TC74HC4052AFT
	Q	6001,6002	LSAR523UB
	Q	6001,6002,6004,6006	ISA1602AM1
	Q	6003,6005,6007	LTC124EUB
	Q	6008	ISA1602AM1
	Q	6009,6012	LTC123JUB
	Q	6010,6011	LSCR523UB
	Q	6013-6015	LTC124EUB
	D	6001,6005,6008,6017	LTL17KRH5D
	D	6002	LTL17KCBH5D
	D	6018,6020-6026,6031	DA2J101
	D	6032,6033,6041-6046	LTL17KRH5D
	D	6040	DA2J101
	D	6051	LTL17KRH5D
MISCELLANEOUS			
	VR	6001-6003 ROTARY VR	DCS1125
	VR	6004 ROTARY VR	DCS1121
	S	6001,6004 ROTARY ENCODER	DSX1133
	S	6002,6005-6013 TACT SWITCH	DSG1079
	CN	6001 32P CONNECTOR	VKN1263
	CN	6002 15P CONNECTOR	VKN1246
	CN	6003 3P JUMPER CONNECTOR	52147-0310
	JH	6001 5P CABLE HOLDER	51048-0500
	JP	6001 JUMPER WIRE	D20PDY0510E
RESISTORS			
		All Resistors	RS1/10SR###J
CAPACITORS			
	C	6001,6002,6006-6009	CKSRYB471K50
	C	6003,6010-6013	CKSRYB104K16
	C	6022-6024	CKSRYB104K16
	C	6025,6026	CEJQ470M6R3

AAF DEUPR ASSY

SEMICONDUCTORS			
	IC	6004	TC74HC4052AFT
	Q	6001,6002,6004,6006	ISA1602AM1
	Q	6001,6002	LSAR523UB
	Q	6003,6005,6007	LTC124EUB
	Q	6008	ISA1602AM1
	Q	6010,6011	LSCR523UB
	Q	6012	LTC123JUB
	Q	6013-6015	LTC124EUB
	D	6001,6005,6008,6032	LTL17KRH5D
	D	6002	LTL17KCBH5D
	D	6018,6020-6026,6031	DA2J101
	D	6033,6041-6046,6051	LTL17KRH5D
	D	6040	DA2J101
MISCELLANEOUS			
	VR	6001-6003 ROTARY VR	DCS1125
	VR	6004 ROTARY VR	DCS1121
	S	6001,6004 ROTARY ENCODER	DSX1133
	S	6002,6005,6006 TACT SWITCH	DSG1079
	S	6008-6013 TACT SWITCH	DSG1079
	CN	6001 32P CONNECTOR	VKN1263
	CN	6002 15P CONNECTOR	VKN1246
	JH	6001 5P CABLE HOLDER	51048-0500

Mark	No.	Description	Part No.
	JP 6001	JUMPER WIRE	D20PDY0510E

RESISTORS

	All Resistors	RS1/10SR###J

CAPACITORS

C	6001,6002,6006-6009	CKSRYB471K50
C	6003,6010-6013	CKSRYB104K16
C	6022-6024	CKSRYB104K16
C	6025,6026	CEJQ470M6R3

AB F PSWB ASSY

MISCELLANEOUS

	S	8901 PUSH SW	ASG1102
	CN	8901 3P JUMPER CONNECTOR	52147-0310

RESISTORS

	All Resistors	RS1/10SR###J

AC F KSWB ASSY

SEMICONDUCTORS

Q	8201,8203,8205	LTC124EUB
Q	8202,8204,8206	ISA1602AM1
Q	8207,8208	LTC123JUB
Q	8209	2SC4154-11
Q	8210-8212,8216-8220	LSAR523UB
Q	8213-8215	LTC124EUB
D	8201,8202,8206	LTL17KCBH5D
D	8203	LTL17KRH5D
D	8207	SLR343WBC7T
D	8208	LTL17KSL5D
D	8209-8211	LTL17KGH5D
D	8212-8217	DA2J101

MISCELLANEOUS

	S	8201-8206 TACT SWITCH	DSG1079
	S	8207,8208 TACT SWITCH	DSG1117
	CN	8201 15P CONNECTOR	VKN1246

RESISTORS

	All Resistors	RS1/10SR###J

CAPACITORS

C	8201,8204	CKSRYB104K16
C	8205	CEJQ470M6R3

AD F SLDB ASSY

SEMICONDUCTORS

Q	8411,8413,8415,8419	LTC124EUB
Q	8412,8416,8422	2SA1577
Q	8414,8420	LSAR523UB
Q	8421	LTC124EUB
Q	8426,8429	LTC123JUB
Q	8428	2SC4154-11
D	8401,8431,8434,8437	LTL17KRH5D
D	8411-8417,8419-8422	DA2J101
D	8440-8443,8445,8447	LTL17KRH5D
D	8449	LTL17KRH5D

Mark	No.	Description	Part No.

MISCELLANEOUS

	VR	8401 SLIDE VR	DCV1033
	S	8401-8403,8405-8408 TACT SWITCH	DSG1079
	CN	8401 5P JUMPER CONNECTOR	52147-0510
	CN	8402 13P CONNECTOR	VKN1244

RESISTORS

	All Resistors	RS1/10SR###J

CAPACITORS

C	8401,8405	CEJQ470M6R3
C	8402,8403	CKSRYB392K50
C	8404	CKSRYB104K16

AJ F SW POWER SUPPLY

* When replacement of the SW POWER SUPPLY is required, be sure to order the SW POWER SUPPLY (DWR1566) which is a parent Assy.